SEA-DOO®

BRP

For 2013 Sea-Doo uses the 2012 manual as a base manual and a 2013 supplemental manual for everything that changed between the years.

Use the 2013 supplemental manual first, then refer to the 2012 base manual for everything not contained in it.

2012
SHOP MANUAL

4-TEC™

219 100 647

2012
Shop Manual

GTS/GTI™/GTR™/RXP™/
RXT™/GTX†/WAKE™
SERIES

SEA-DOO

BRP

TABLE OF CONTENTS

SAFETY NOTICE XI

INTRODUCTION XII
VEHICLE INFORMATION XIII
MANUAL INFORMATION XIV
FASTENER INFORMATION XIX

01 MAINTENANCE
01 – MAINTENANCE SCHEDULE 7
02 – STORAGE PROCEDURE 11
PROCEDURES 11
PROPULSION SYSTEM 11
FUEL SYSTEM 11
ENGINE 11
ELECTRICAL SYSTEM 13
ENGINE COMPARTMENT 13
BODY AND HULL 14
03 – PRESEASON PREPARATION 15
04 – SPECIAL PROCEDURES 17
GENERAL 17
PROCEDURES 17
TOWING THE WATERCRAFT IN WATER 17
SUBMERGED WATERCRAFT 17
WATER-FLOODED ENGINE 17
CAPSIZED WATERCRAFT 19

02 ENGINE
01 – ENGINE REMOVAL AND INSTALLATION 21
PROCEDURES 26
ENGINE 26
ENGINE MOUNTS 29
02 – AIR INTAKE SYSTEM (MODELS WITHOUT SUSPENSION) 31
PROCEDURES 33
AIR INTAKE SILENCER 33
AIR INTAKE TUBE 36
03 – AIR INTAKE SYSTEM (MODELS WITH SUSPENSION) 39
PROCEDURES 41
AIR INTAKE SILENCER COVER 41
AIR INTAKE SILENCER BAFFLE 41
AIR INTAKE TUBE 41
AIR INTAKE SILENCER 42
04 – INTAKE MANIFOLD 43
PROCEDURES 46
INTAKE MANIFOLD 46
FLAME ARRESTER 49
05 – SUPERCHARGER (215 AND 260 ENGINES) 51
INSPECTION 53
SUPERCHARGER INLET CLEANLINESS 53
SUPERCHARGER CLUTCH SLIPPING MOMENT (ON ENGINE) 53
SUPERCHARGER CLUTCH SLIPPING MOMENT (BENCH TEST) 54
TROUBLESHOOTING 55
PROCEDURES 55
SUPERCHARGER 55

TABLE OF CONTENTS

02 ENGINE (cont'd)

06 – INTERCOOLER (215 ENGINE) 67
PROCEDURES 68
INTERCOOLER 68
07 – INTERCOOLER (260 ENGINE) 71
MAINTENANCE 72
INTERCOOLER FLUSHING 72
PROCEDURES 72
INTERCOOLER 72
INTERCOOLER ATTACHMENTS 74
08 – EXHAUST SYSTEM 77
GENERAL 83
SYSTEM DESCRIPTION 83
MAINTENANCE 83
EXHAUST SYSTEM FLUSHING 83
PROCEDURES 84
MUFFLER 84
EXHAUST HOSES 87
EXHAUST PIPE 88
EXHAUST MANIFOLD 89
RESONATOR 90
09 – PTO HOUSING AND MAGNETO 93
GENERAL 95
PROCEDURES 95
PTO HOUSING 95
PTO SEAL 99
PTO COUPLING 100
STARTER DRIVE BEARINGS 100
STATOR 101
ROTOR AND TRIGGER WHEEL 103
RING GEAR 104
STARTER DRIVE 105
10 – LUBRICATION SYSTEM 107
MAINTENANCE 112
ENGINE OIL 112
OIL FILTER 114
INSPECTION 115
ENGINE OIL PRESSURE 115
TROUBLESHOOTING 116
PROCEDURES 117
OIL PRESSURE SWITCH (OPS) 117
PTO OIL STRAINER 118
ENGINE OIL PRESSURE REGULATOR 119
OIL PRESSURE PUMP 120
ROTARY SEAL 122
OIL SUCTION PUMP 123
SUCTION PUMP OIL STRAINER 126
SUPERCHARGER OIL SPRAY NOZZLE 127
PISTON OIL SPRAY NOZZLES 128
OIL SEPARATOR COVER 129
BLOW-BY VALVE 130
TOPS SWITCH 132
OIL COOLER 134

TABLE OF CONTENTS

02 ENGINE (cont'd)

11 – COOLING SYSTEM 137
GENERAL 141
SYSTEM DESCRIPTION 141
MAINTENANCE 141
ENGINE COOLANT 141
INSPECTION 143
COOLING SYSTEM LEAK TEST 143
TROUBLESHOOTING 144
PROCEDURES 144
PRESSURE CAP 144
CLAMPS 144
WATER PUMP HOUSING 145
WATER PUMP IMPELLER 147
THERMOSTAT 147
ROTARY SEAL 148

12 – CYLINDER HEAD 149
GENERAL 151
INSPECTION 151
ENGINE LEAK TEST 151
TROUBLESHOOTING 153
PROCEDURES 153
CYLINDER HEAD COVER 153
SPARK PLUG TUBES 154
ROCKER ARMS 155
CAMSHAFT TIMING GEAR 157
CAMSHAFT 158
CYLINDER HEAD 160
VALVE SPRINGS 162
VALVES 163
VALVE GUIDE 167

13 – CYLINDER BLOCK 169
GENERAL 172
TROUBLESHOOTING 172
PROCEDURES 172
TIMING CHAIN 172
CHAIN TENSIONER 173
PISTONS AND CONNECTING RODS 173
PISTON RINGS 178
CRANKSHAFT 179
BALANCER SHAFT 183
CYLINDER BLOCK 185

03 ELECTRONIC MANAGEMENT SYSTEMS

01 – ENGINE MANAGEMENT SYSTEM 191
GENERAL 193
SYSTEM DESCRIPTION 193

02 – iCONTROL SYSTEM 195
GENERAL 195
iTC (INTELLIGENT THROTTLE CONTROL) 195
iBR (INTELLIGENT BRAKE AND REVERSE) 195
iS (INTELLIGENT SUSPENSION) 195

03 – CONTROLLER AREA NETWORK (CAN) 197
GENERAL 197
SYSTEM DESCRIPTION 197

TABLE OF CONTENTS

03 ELECTRONIC MANAGEMENT SYSTEMS (cont'd)

03 – CONTROLLER AREA NETWORK (CAN) (cont'd)

TROUBLESHOOTING 198

DIAGNOSTIC TIPS 198

04 – COMMUNICATION TOOLS AND B.U.D.S. 201

GENERAL 201

TROUBLESHOOTING 201

DIAGNOSTIC TIPS 201

PROCEDURES 202

MPI-2 202

B.U.D.S. SOFTWARE 204

05 – DIAGNOSTIC AND FAULT CODES 207

GENERAL 207

MONITORING SYSTEM 207

FAULT CODES 212

FAULT CODE DIAGNOSTIC 215

GUIDELINES TO SOLVE SPECIFIC FAULT CODES 219

FAULT CODE TABLE 221

04 FUEL SYSTEM

01 – INTELLIGENT THROTTLE CONTROL (iTC) 243

GENERAL 243

SYSTEM DESCRIPTION 243

OPERATING MODES 245

PROCEDURES 256

THROTTLE ACCELERATOR SENSOR (TAS) 256

CRUISE SWITCH 260

SPORT/ECO SWITCH 262

02 – ELECTRONIC FUEL INJECTION (EFI) 265

GENERAL 265

SYSTEM DESCRIPTION 266

ADJUSTMENT 266

IDLE SPEED 266

CLOSED THROTTLE RESET 267

TROUBLESHOOTING 268

DIAGNOSTIC TIPS 268

PROCEDURES 268

ENGINE CONTROL MODULE (ECM) 268

FUEL RAIL 276

FUEL INJECTOR 278

THROTTLE BODY 283

TPS (THROTTLE POSITION SENSOR) 287

CRANKSHAFT POSITION SENSOR (CPS) 288

CAMSHAFT POSITION SENSOR (CAPS) 290

MANIFOLD AIR TEMPERATURE SENSOR (MATS) 293

COOLANT TEMPERATURE SENSOR (CTS) 295

MANIFOLD ABSOLUTE PRESSURE SENSOR (MAPS) 296

EXHAUST GAS TEMPERATURE SENSOR (EGTS) 297

KNOCK SENSOR (KS) 299

03 – FUEL TANK AND FUEL PUMP 301

GENERAL 306

SYSTEM DESCRIPTION 306

INSPECTION 307

FUEL TANK LEAK TEST 307

FUEL TANK CAP LEAK TEST 309

04 FUEL SYSTEM (cont'd)
03 – FUEL TANK AND FUEL PUMP (cont'd)
INSPECTION (cont'd)
FUEL SYSTEM HIGH PRESSURE LEAK TEST 309
FUEL PUMP PRESSURE TEST 310
PROCEDURES 311
FUEL HOSES AND OETIKER CLAMPS 311
FUEL PUMP 312
FUEL FILTER 316
FUEL LEVEL SENSOR 317
FUEL TANK 322

05 ELECTRICAL SYSTEM
01 – POWER DISTRIBUTION AND GROUNDS 325
GENERAL 325
POWER DISTRIBUTION DIAGRAM 325
FUSE BOX 326
RELAY 328
GROUNDS 328
02 – IGNITION SYSTEM 329
GENERAL 329
SYSTEM DESCRIPTION 329
TROUBLESHOOTING 330
IGNITION SYSTEM TESTING 330
DIAGNOSTIC GUIDELINES 330
PROCEDURES 331
IGNITION COILS 331
SPARK PLUGS 335
ENGINE CUT-OFF SWITCH 336
03 – CHARGING SYSTEM 339
GENERAL 339
SYSTEM DESCRIPTION 339
INSPECTION 340
CHARGING SYSTEM OUTPUT 340
TROUBLESHOOTING 342
PROCEDURES 342
VOLTAGE REGULATOR/RECTIFIER 342
ELECTRICAL COMPONENT SUPPORT 344
BATTERY 346
BATTERY VENT CHECK VALVE 354
04 – STARTING SYSTEM 357
GENERAL 359
BASIC STARTING SYSTEM OPERATION 359
TROUBLESHOOTING 359
DIAGNOSTIC TIPS 359
DIAGNOSTIC GUIDELINES 359
PROCEDURES 360
ENGINE START/STOP SWITCH 360
STARTER SOLENOID 362
STARTER 366
05 – DIGITALLY ENCODED SECURITY SYSTEM (D.E.S.S.) 371
GENERAL 371
SYSTEM DESCRIPTION 371
TROUBLESHOOTING 371
DIAGNOSTIC GUIDELINES 371

TABLE OF CONTENTS

05 ELECTRICAL SYSTEM (cont'd)

05 – DIGITALLY ENCODED SECURITY SYSTEM (D.E.S.S.) (cont'd)

PROCEDURES 372
D.E.S.S. KEY 372
06 – INFORMATION CENTER (GAUGE) 375
GENERAL 376
INFORMATION CENTER (GAUGE) (GTS) 376
INFORMATION CENTER (GAUGES) (GTI/GTR/WAKE) 377
INFORMATION CENTER (GTX, RXT, WAKE PRO) 386
INFORMATION CENTER (RXP-X) 396
MULTIFUNCTION DISPLAY MESSAGES 404
TROUBLESHOOTING 407
DIAGNOSTIC TIPS 407
TROUBLESHOOTING GUIDELINES 407
PROCEDURES 409
INFORMATION CENTER 409
GAUGE SUPPORT (RXT, GTX AND WAKE PRO) 420
MODE/SET AND UP/DOWN ARROW BUTTONS 421
WATER TEMPERATURE SENSOR 426
DEPTH SOUNDER 426

06 STEERING AND PROPULSION

01 – STEERING AND O.T.A.S. 429
GENERAL 435
SYSTEM DESCRIPTION (O.T.A.S.) 435
ADJUSTMENT 435
STEERING ALIGNMENT 435
ADJUSTABLE ERGONOMIC STEERING (AES) 437
INSPECTION 438
O.T.A.S. OPERATION 438
TROUBLESHOOTING 438
DIAGNOSTIC TIPS 438
PROCEDURES 438
HANDLEBAR GRIP 438
HANDLEBAR SWITCH COVER (LH OR RH) 439
EXTENSION BLOCKS (AES STEERING) 441
STEERING COVER 441
THROTTLE AND iBR LEVERS 443
STEERING CABLE 444
STEERING COLUMN 447
STEERING COLUMN SUPPORT 449
STEERING TILT RELEASE HANDLE 449
O.T.A.S. SWITCH 450
O.T.A.S. MAGNETS 452
02 – iBR AND VTS 453
GENERAL 456
SYSTEM DESCRIPTION (iBR) 456
SYSTEM DESCRIPTION (VTS) 459
ADJUSTMENT 461
IBR NEUTRAL ADJUSTMENT 461
MAINTENANCE 461
iBR GATE BACKLASH CHECK 461
FRICTION SLEEVE REPLACEMENT 463
INSPECTION 463
IBR SYSTEM FUNCTIONAL TEST 463

06 STEERING AND PROPULSION (cont'd)
02 – iBR AND VTS (cont'd)
INSPECTION (cont'd)
VTS FUNCTIONAL TEST 464
TROUBLESHOOTING 465
TESTING SEQUENCE 465
PROCEDURES 466
iBR LEVER SENSOR (BRLS) 466
iBR ACTUATOR 470
iBR GATE 479
U-ARM 485
iBR GATE SUPPORT PLATES 485
VTS CONTROL BUTTON 486
03 – JET PUMP 489
GENERAL 491
JET PUMP MAIN COMPONENTS 491
INSPECTION 491
IMPELLER CONDITION 491
IMPELLER/WEAR RING CLEARANCE 491
IMPELLER SHAFT RADIAL PLAY 491
LEAK TEST 492
PROCEDURES 493
SACRIFICIAL ANODE 493
JET PUMP HOUSING 493
VENTURI 495
IMPELLER COVER 496
IMPELLER 498
WEAR RING 500
IMPELLER SHAFT AND BEARING 501
NOZZLE (GTS MODELS) 507
04 – DRIVE SHAFT 509
PROCEDURES 511
DRIVE SHAFT 511
DRIVE SHAFT BOOT 517
CARBON RING 517

07 BODY AND HULL
01 – MANUAL SUSPENSION (S) 519
GENERAL 523
SYSTEM DESCRIPTION 523
TROUBLESHOOTING 523
DIAGNOSTIC GUIDELINES 523
PROCEDURES 524
SHOCK ABSORBER 524
SPRING 526
LINK ARM 528
LATERAL SUPPORT 528
LATERAL BELLOWS 529
FRONT SUSPENSION ARM 530
SUSPENSION BASE 531
REAR SUSPENSION ARM 533
SUSPENSION ARM SHAFTS 535
02 – ADJUSTABLE SUSPENSION (aS) 539
GENERAL 543
SYSTEM DESCRIPTION 543

TABLE OF CONTENTS

07 BODY AND HULL (cont'd)

02 – ADJUSTABLE SUSPENSION (aS) (cont'd)

TROUBLESHOOTING 544
DIAGNOSTIC GUIDELINES 544
PROCEDURES 545
SHOCK ABSORBER 545
SPRING 547
LINK ARM 549
LATERAL SUPPORT 549
LATERAL BELLOWS 550
FRONT SUSPENSION ARM 551
SUSPENSION BASE 552
REAR SUSPENSION ARM 554
SUSPENSION ARM SHAFTS 556

03 – INTELLIGENT SUSPENSION (iS) 559
GENERAL 563
SYSTEM DESCRIPTION (COMPONENTS) 563
SYSTEM OPERATION 564
TROUBLESHOOTING 566
DIAGNOSTIC TIPS 566
DIAGNOSTIC GUIDELINES 567
DIAGNOSTIC FLOW CHARTS 569
PROCEDURES 571
SHOCK ABSORBER 571
SPRINGS 572
SUSPENSION POSITION SENSOR 573
iS MODULE 575
HYDRAULIC PUMP 577
ACTUATOR 581
LATERAL SUPPORT 583
LATERAL BELLOWS 583
FRONT SUSPENSION ARM 585
SUSPENSION BASE 585
REAR SUSPENSION ARM 587
SUSPENSION ARM SHAFTS 588

04 – BODY (GTS/GTI/GTR/WAKE) 593
PROCEDURES 600
GELCOAT 600
DECALS 600
CARPETS 600
STORAGE COMPARTMENT COVER 600
STORAGE COMPARTMENT COVER HINGE 601
GAUGE TRIM 602
LATERAL TRIM PANEL 603
MIRROR SUPPORT 604
MIRRORS 605
CONSOLE 605
GLOVE BOX COVER 606
SEAT 606
SEAT LATCH 606
REAR HANDLE 606
BUMPER 607
VENTILATION DUCT 607
WAKE PYLON (WAKE) 608

07 BODY AND HULL (cont'd)
05 – BODY (RXT/GTX/WAKE PRO) 613
PROCEDURES 626
GELCOAT 626
DECALS 628
CARPETS 629
STORAGE COMPARTMENT COVER 629
GLOVE BOX COVER 630
SEAT 631
SEAT LATCH 632
MIRRORS 632
BUMPERS 633
BODY COVER 635
FRONT BODY MODULE 637
SPEED-TIE UNIT 637
BOARDING PLATFORM (iS AND aS MODELS) 647
DECK EXTENSION (iS AND aS MODELS) 648
MOVING DECK (iS AND aS MODELS) 649
FRONT GRILLE (iS AND aS MODELS) 656
SPLASH DEFLECTOR (iS AND aS MODELS) 656
REAR VENTILATION BOX (iS AND aS MODELS) 657
FRONT VENTILATION BOX (iS AND aS MODELS) 657
AIR INTAKE DUCT (iS AND aS MODELS) 657
REAR ACCESS PANELS (MODELS WITHOUT iS OR aS) 658
WAKE PYLON (WAKE PRO 215) 659
06 – BODY (RXP) 663
PROCEDURES 669
GELCOAT 669
DECALS 669
CARPETS 669
STORAGE COMPARTMENT COVER 669
STORAGE COMPARTMENT COVER HINGE 671
GAUGE TRIM 672
LATERAL TRIM PANEL 673
MIRROR SUPPORT 673
MIRRORS 674
CONSOLE 674
GLOVE BOX COVER 674
SEAT 675
SEAT LATCH 675
REAR HANDLE 675
BUMPER 676
VENTILATION DUCT 676
07 – HULL (GTS/GTI/GTR/WAKE/RXP) 679
PROCEDURES 683
HULL 683
INLET GRATE 683
RIDE PLATE 684
JET PUMP SUPPORT 685
THRU-HULL FITTING 686
FIXED REAR SPONSONS (EXCEPT RXP-X SERIES) 687
ADJUSTABLE REAR SPONSONS(RXP-X SERIES) 688
ADJUSTABLE SPONSON SUPPORTS (RXP-X SERIES) 688
FIXED TRIM TABS(RXP-X SERIES) 689
BAILERS 689

TABLE OF CONTENTS

07 BODY AND HULL (cont'd)

07 – HULL (GTS/GTI/GTR/WAKE/RXP) (cont'd)

PROCEDURES (cont'd)

DRAIN PLUGS 690
iCATCH BOW CUP (GTI LIMITED 155 AND RXP-X) 691
BOW AND STERN EYELETS 691
HULL INSERTS 692

08 – HULL (GTX/RXT/WAKE PRO) 695

PROCEDURES 699
HULL 699
INLET GRATE 699
RIDE PLATE 700
JET PUMP SUPPORT 702
THRU-HULL FITTING 704
BOW STABILIZER (RXT-X aS SERIES) 704
FIXED REAR SPONSONS 705
ADJUSTABLE REAR SPONSONS (RXT-X SERIES) 705
ADJUSTABLE SPONSONSUPPORTS (RXT-X SERIES) 706
ADJUSTABLE TRIM TABS(RXT-X aS MODEL) 706
BAILERS 708
DRAIN PLUGS 709
BOW EYELET OR iCATCH BOW CUP 710
STERN EYELETS 712
HULL INSERTS 712

08 TECHNICAL SPECIFICATIONS

01 – GTS 130 AND GTI 130 715
02 – GTI 155 AND WAKE 155 721
03 – GTR 215 727
04 – GTX 155/215/260 733
05 – RXT 260 741
06 – WAKE PRO 215 747
07 – RXP 260 753

09 WIRING DIAGRAM

01 – WIRING DIAGRAM INFORMATION 759
GENERAL 759
WIRING DIAGRAM LOCATION 759
WIRING DIAGRAM CODES 759

02 – CONNECTOR INFORMATION 763
PROCEDURES 763
MAGNETO AND ENGINE CONNECTOR (DEUTSCH) 763
ECM CONNECTOR (MOLEX) 765
BRLS, TAS AND STARTER SOLENOID CONNECTORS (DELPHI) 768
iBR AND iS POWER CONNECTORS (DELPHI) 769
SPS CONNECTORS (BOSCH) 769
INFORMATION CENTER CONNECTOR (DELPHI) 770
VTS, SPORT/ECO, MODE/SET AND UP/DOWN SWITCH CONNECTORS (DELPHI) 771
24 PIN STEERING CONNECTOR (APEX ERGOMATE) 771
VOLTAGE REGULATOR/RECTIFIER CONNECTOR (FURUKAWA) 776
BATTERY CABLES 776

SAFETY NOTICE

This manual has been prepared as a guide to correctly service and repair 2012 Sea-Doo® watercraft as described in the model list in the *INTRODUCTION*.

This edition was primarily published to be used by technicians who are already familiar with all service procedures relating to BRP products. Mechanical technicians should attend training courses given by BRPTI.

Please note that the instructions will apply only if proper hand tools and special service tools are used.

The contents of this manual depicts parts and procedures applicable to the particular product at the time of writing. Service and Warranty Bulletins may be published to update the content of this manual. Dealer modifications that were carried out after manufacturing of the product, whether or not authorized by BRP, are not included.

In addition, the sole purpose of the illustrations throughout the manual, is to assist identification of the general configuration of the parts. They are not to be interpreted as technical drawings or exact replicas of the parts.

The use of BRP parts is most strongly recommended when considering replacement of any component. Dealer and/or distributor assistance should be sought in case of doubt.

The engines and the corresponding components identified in this document should not be utilized on product(s) other than those mentioned in this document.

It is understood that certain modifications may render use of the watercraft illegal under existing federal, provincial and state regulations.

This manual emphasizes particular information denoted by the following wording and symbols:

⚠ WARNING

Indicates a potential hazard that, if not avoided, could result in serious injury or death.

⚠ CAUTION Indicates a hazardous situation which, if not avoided, could result in minor or moderate injury.

NOTICE **Indicates an instruction which, if not followed, could result in severe damage to vehicle components or other property.**

NOTE: Indicates supplementary information required to fully complete an instruction.

Although the mere reading of such information does not eliminate the hazard, your understanding of the information will promote its correct use.

Always observe common shop safety practice.

Unless otherwise noted, the engine must be stopped and the tether cord must be removed prior to perform any services.

Before carrying out any inspection or maintenance procedure on the watercraft, wait until the engine and exhaust have cooled down to avoid potential burns.

Torque wrench tightening specifications must be strictly adhered to. Use the torque values and service products as in the exploded views or in the procedures when noted.

Locking devices when removed must be replaced (e.g.: locking tabs, elastic stop nuts, self-locking fasteners, cotter pins, etc.).

Hoses, cables and locking ties removed during a procedure must be reinstalled as per factory standards.

When ordering parts always refer to the specific model *PARTS CATALOG*.

We strongly recommend that any services be carried out and/or verified by a highly skilled professional mechanic.

It is understood that this manual may be translated into another language. In the event of any discrepancy, the English version shall prevail.

BRP disclaims liability for all damages and/or injuries resulting from the improper use of the contents.

INTRODUCTION

This shop manual covers the following BRP made 2012 Sea-Doo watercraft models.

MODEL	MODEL NUMBER
GTI™ Series	
GTI	23CA, 23CB
GTI SE	24CA, 24CB, 24CC, 30CA, 30CB
GTI LTD	39CA, 39CB
GTR™ Series	
GTR	36CA, 36CB
GTS™ Series	
GTS	43CA, 43CB
GTS RENTAL	25CB
GTX™ Series	
GTX	38CA, 38CB, 42CA, 42CB
GTX S	33CA, 33CB
GTX LIMITED iS	18CA, 18CB
RXP™ Series	
RXP-X	21CA
RXP-X RS	21CB
RXT™ Series	
RXT	17CA
RXT RS	17CB
RXT-X	31CA
RXT-X RS	31CB
RXT-X aS	41CA
RXT-X RS aS	41CB
RXT iS	34CA
WAKE Series	
WAKE 155	35CA, 35CB
WAKE PRO	26CA, 26CB

The following MY 2012 Sea-Doo watercraft models **are not covered** in this shop manual. Refer to *2011 SHOP MANUAL* (P/N 219 100 538).

MODEL	MODEL NUMBER
GTI™ Series	
GTI	23CR, 23CS
GTI SE	24CR, 24CS, 30CS
GTI LTD	39CS
GTS™ Series	
GTS	43CS
GTS RENTAL	25CS
GTX™ Series	
GTX	38CR, 38CS, 42CS
GTX LIMITED iS	18CS
RXT™ Series	
RXT RS	17CS
WAKE Series	
WAKE 155	35CR, 35CS

The information and component/system descriptions contained in this manual are correct at time of writing. BRP however, maintains a policy of continuous improvement of its products without imposing upon itself any obligation to install them on products previously manufactured.

Due to late changes, there may be some differences between the manufactured product and the description and/or specifications in this document.

BRP reserves the right at any time to discontinue or change specifications, designs, features, models or equipment without incurring obligation.

VEHICLE INFORMATION

HULL IDENTIFICATION NUMBER (HIN)

The hull identification number is composed of 12 digits:

YDV	12345	L	4	95	
					Model year
					Year of production
					Month of production
					Serial number (a letter may also be used as a digit)
					Manufacturer

It is located on the deck at the rear of watercraft.



TYPICAL
1. Hull Identification Number (HIN) - aS and iS models

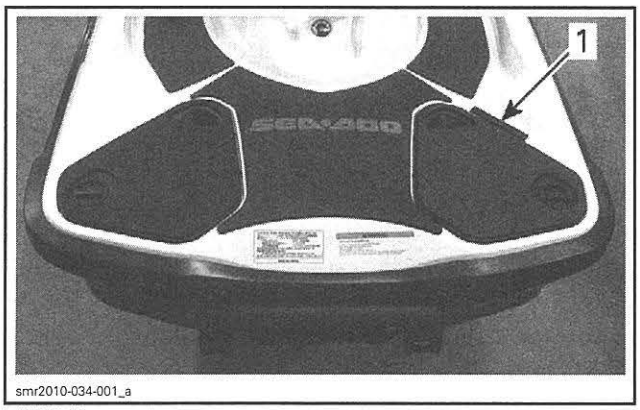

TYPICAL
1. Hull Identification Number (HIN) - models without aS and iS

ENGINE IDENTIFICATION NUMBER (EIN)

The Engine Identification Number is located on front end of the engine.

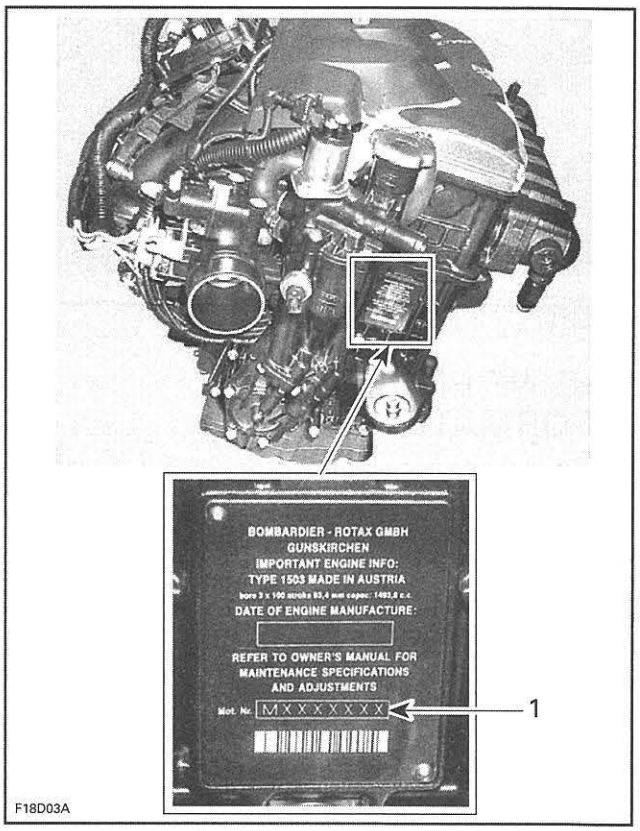

TYPICAL
1. Engine Identification Number (EIN)

HOISTING A WATERCRAFT

To work on a watercraft, you should mount it securely on a stand.

The LIFTING STRAP (P/N 529 036 189) MUST be used to hoist and mount the watercraft on a stand.

NOTICE **Using any other lifting strap kit than the one recommended may cause damage to the vehicle. Bumpers could be torn off.**

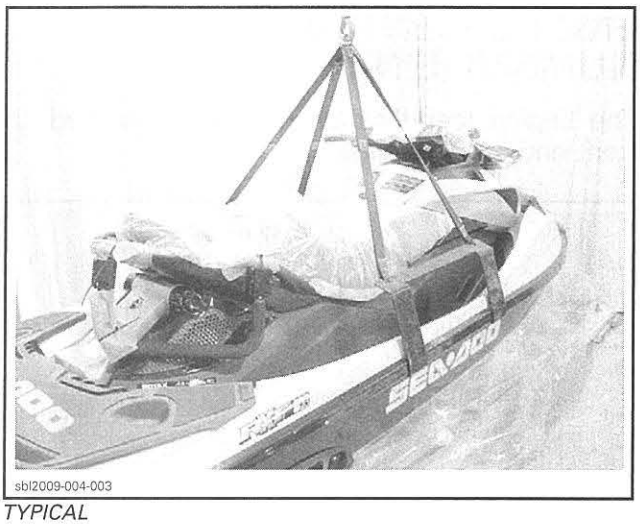

TYPICAL

ENGINE EMISSIONS INFORMATION

Manufacturer's Responsibility

Since production of the 1999 model year engines, PWC manufacturers of marine engines are required to determine the exhaust emission levels for each engine horsepower family and certify these engines with the United States of America *ENVIRONMENTAL PROTECTION AGENCY (EPA)*. An emissions control information label, showing emission levels and engine specifications, must be placed on each vehicle at the time of manufacture.

Dealer Responsibility

When servicing all 1999 and more recent Sea-Doo watercraft that carry an emissions control information label, adjustments must be kept within published factory specifications.

Replacement or repair of any emission related component must be executed in a manner that maintains emission levels within the prescribed certification standards.

Dealers are not to modify the engine in any manner that would alter the horsepower or allow emission levels to exceed their predetermined factory specifications.

Exceptions include manufacturers' prescribed changes, such as altitude adjustments.

Owner Responsibility

The owner/operator is required to have engine maintenance performed to maintain emission levels within prescribed certification standards.

The owner/operator is not to, and should not allow anyone else to modify the engine in any manner that would alter the horsepower or allow emissions levels to exceed their predetermined factory specifications.

EPA Emission Regulations

All new 1999 and more recent Sea-Doo watercraft manufactured by BRP are certified to the EPA standards as conforming to the requirements of the regulations for the control of air pollution emitted from new watercraft engines. This certification is contingent on certain adjustments being set to factory standards. For this reason, the factory procedure for servicing the product must be strictly followed and, whenever practicable, returned to the original intent of the design.

The responsibilities listed above are general and in no way a complete listing of the rules and regulations pertaining to the EPA requirements on exhaust emissions for marine products. For more detailed information on this subject, you may contact:

For All Courier Services:
U.S. Environmental Protection Agency
Office of Transportation and Air Quality
1310 L Street NW
Washington D.C. 20005

Regular US Postal Mail:
U.S. Environmental Protection Agency
Office of Transportation and Air Quality
1200 Pennsylvania Ave. NW
Mail Code 6403J
Washington D.C. 20460

INTERNET WEB SITE: http://www.epa.gov/otaq

E-Mail: otaqpublicweb@epa.gov

MANUAL INFORMATION

MANUAL PROCEDURES

Many of the procedures in this manual are interrelated. Before undertaking any task, you should read and thoroughly understand the entire section or subsection in which the procedure is contained.

A number of procedures throughout the book require the use of special tools. Before commencing any procedure, be sure that you have on hand all the tools required, or their approved equivalents.

The use of RIGHT (starboard) and LEFT (port) indications in the text are always referenced to the driving position (when sitting on the watercraft).

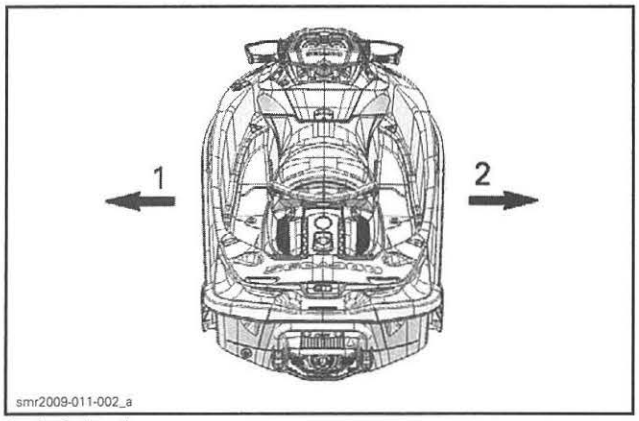

1. Left (port)
2. Right (starboard)

Other common terms used in the marine industry are the BOW (front of the watercraft), and the STERN (rear of the watercraft).

This manual uses technical terms which may be different from the ones in the *PARTS CATALOGS*.

MANUAL LAYOUT

This manual is divided into many major sections as can be seen in the main table of contents at the beginning of the manual.

Each section is divided into various subsections, and again, each subsection has one or more divisions.

Illustrations and photos show the typical construction of various assemblies and, in all cases, may not reproduce the full detail or exact shape of the parts used in a particular model vehicle. However, they represent parts which have the same or a similar function.

TYPICAL PAGE

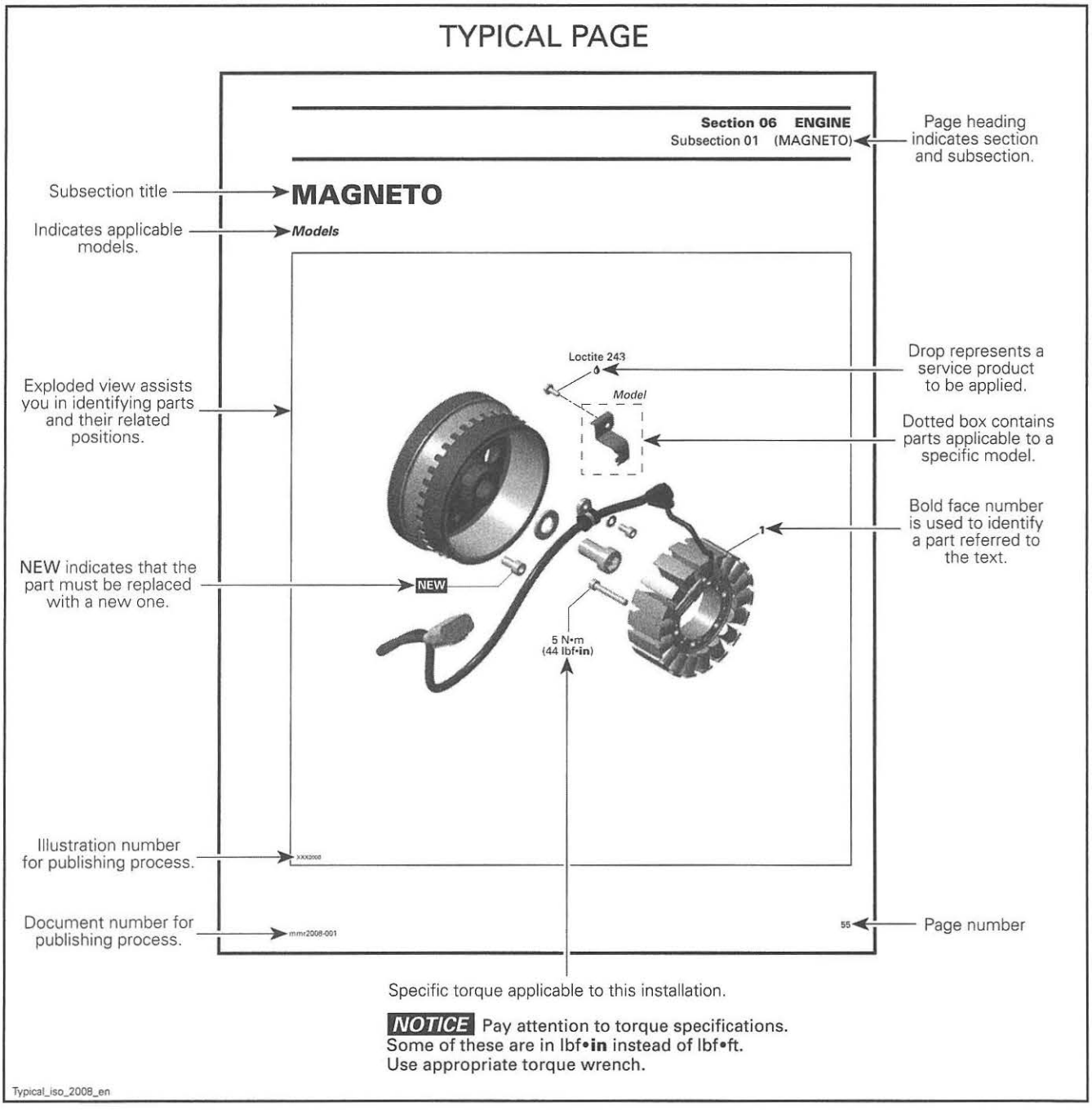

TYPICAL PAGE

Tittle in bold indicates category of information to be carried out.

GENERAL

NOTE: The following procedures can be done without removing the engine.

During assembly/installation, use the torque values and service products as in the exploded views.

Clean threads before applying a threadlocker. Refer to *SELF-LOCKING FASTENERS* and *LOCTITE APPLICATION* sections at the beginning of this manual for complete procedure.

Reference to a specific section or subsection.

⚠ WARNING

Torque wrench tightening specifications must be strictly adhered to.
Locking devices (e.g.: locking tabs, elastic stop nuts, self-locking fasteners, etc.) must be replaced with new ones.

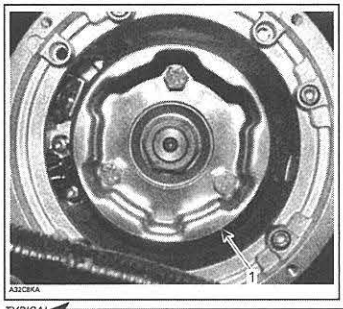

TYPICAL
1: Starting pulley

"TYPICAL" indicates a general view which may not represent exact details.

Call-outs pertaining to above illustration.

PROCEDURES

Indicates component procedures apply to.

MAGNETO FLYWHEEL

Magneto Flywheel Cleaning

Clean all metal components in a non-ferrous metal cleaner.

CAUTION: Clean magneto flywheel using only a clean cloth.

Indicates specific procedure to be carried out.

Magneto Flywheel Removal

Remove muffler, refer to the *EXHAUST SYSTEM* section.

Remove acoustic panel.

Remove rewind starter.

Remove starting pulley **no. 2**.

NOTE: To remove starting pulley bolts, hold magneto flywheel with a socket as shown.

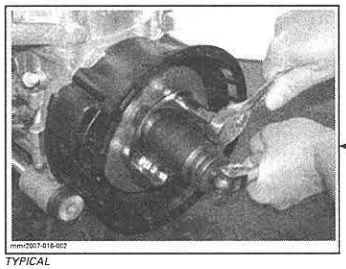

TYPICAL

Illustration always follows text to which it applies.

Models

Remove the connecting flange retaining the rewind starter to the engine housing.

Italic bold face typesetting indicates a procedure applicable to a specific model(s).

Bold face number following part name refers to exploded view at beginning of subsection.

typical_txt_2008_en

TIGHTENING TORQUE

Tighten fasteners to the torque specified in the exploded view(s) and/or in the written procedure. When a torque is not specified, the torque normally recommended for a specific fastener should be used. Refer to the following table.

⚠ WARNING

Torque wrench tightening specifications must be strictly adhered to.
Locking devices must be replaced when removed (e.g.: locking tabs, elastic stop nuts, self-locking fasteners, cotter pins, etc.).

In order to avoid a poor assembly, tighten screws, bolts, or nuts in accordance with the following procedure:

1. Manually screw all screws, bolts and/or nuts.
2. Apply half the recommended torque value.

NOTICE **Be sure to use the recommended tightening torque for the specified fastener used.**

NOTE: Whenever possible, always apply torque on the nut.

3. Tighten fastener to the recommended torque value.

NOTE: Always torque screws, bolts and/or nuts using a crisscross pattern when multiple fasteners are used to secure a part (e.g. a cylinder head). Some parts must be torqued according to a specific sequence and torque pattern as detailed in the installation procedure.

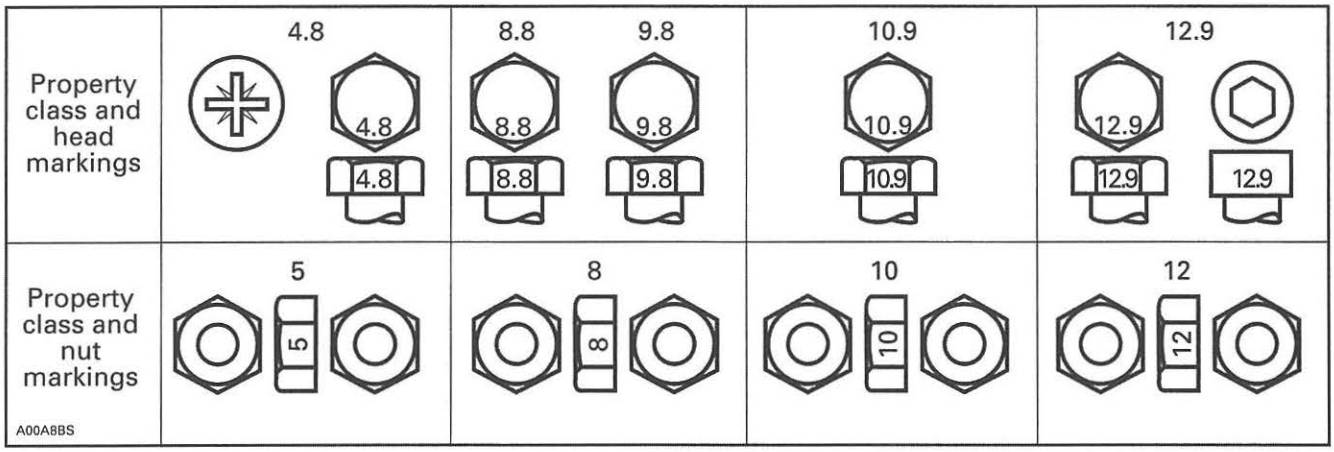

FASTENER SIZE	FASTENER GRADE/TORQUE			
	5.8 Grade	8.8 Grade	10.9 Grade	12.9 Grade
M4	1.5 – 2 N•m (13 – 18 lbf•**in**)	2.5 – 3 N•m (22 – 27 lbf•**in**)	3.5 – 4 N•m (31 – 35 lbf•ft)	4 – 5 N•m (35 – 44 lbf•ft)
M5	3 – 3.5 N•m (27 – 31 lbf•ft)	4.5 – 5.5 N•m (40 – 47 lbf•ft)	7 – 8.5 N•m (62 – 75 lbf•ft)	8 – 10 N•m (71 – 89 lbf•ft)
M6	6.5 – 8.5 N•m (58 – 75 lbf•ft)	8 – 12 N•m (71 – 106 lbf•ft)	10.5 – 15 N•m (93 – 133 lbf•**in**)	16 N•m (142 lbf•**in**)
M8	15 N•m (133 lbf•**in**)	25 N•m (18 lbf•ft)	32 N•m (24 lbf•ft)	40 N•m (30 lbf•ft)
M10	29 N•m (21 lbf•ft)	48 N•m (35 lbf•ft)	61 N•m (45 lbf•ft)	73 N•m (54 lbf•ft)
M12	52 N•m (38 lbf•ft)	85 N•m (63 lbf•ft)	105 N•m (77 lbf•ft)	128 N•m (94 lbf•ft)
M14	85 N•m (63 lbf•ft)	135 N•m (100 lbf•ft)	170 N•m (125 lbf•ft)	200 N•m (148 lbf•ft)

FASTENER INFORMATION

NOTICE Most fasteners are metric. Mismatched or incorrect fasteners could cause damage to the vehicle.

SELF-LOCKING FASTENER PROCEDURE

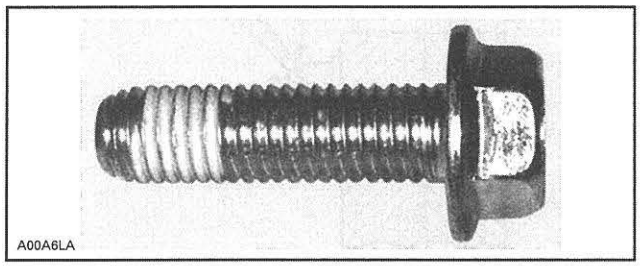

TYPICAL — SELF-LOCKING FASTENER

The following describes common procedures used when working with self-locking fasteners.

Use a metal brush or a tap to clean the hole properly, then use a solvent. Allow the solvent time to act, approximately 30 minutes, then wipe off. Solvent utilization is to ensure proper adhesion of the product used for locking the fastener.

LOCTITE® APPLICATION PROCEDURE

The following describes common procedures used when working with Loctite products.

NOTE: Always use proper strength Loctite product as recommended in this Shop Manual.

NOTICE When applying threadlocker products (anaerobic products), pay attention to prevent the product from coming into contact with ABS plastic parts (painted parts).

Threadlocker Application for Uncovered Holes (Bolts and Nuts)

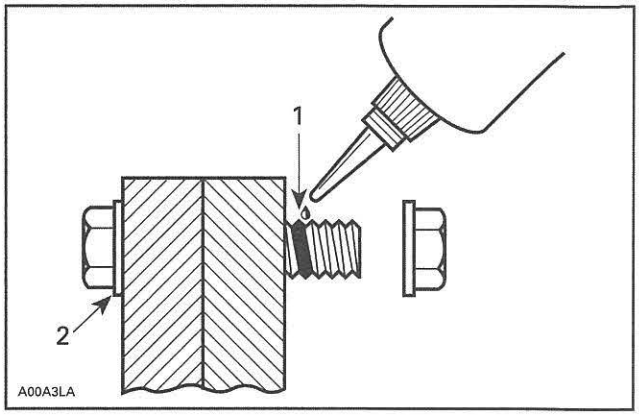

1. Apply here
2. Do not apply

1. Clean threads (bolt and nut) with solvent.
2. Apply LOCTITE PRIMER N (P/N 293 800 041) on threads and allow to dry.
3. Choose proper strength Loctite threadlocker.
4. Fit bolt in the hole.
5. Apply a few drops of threadlocker at proposed tightened nut engagement area.
6. Position nut and tighten as required.

Threadlocker Application for Blind Holes

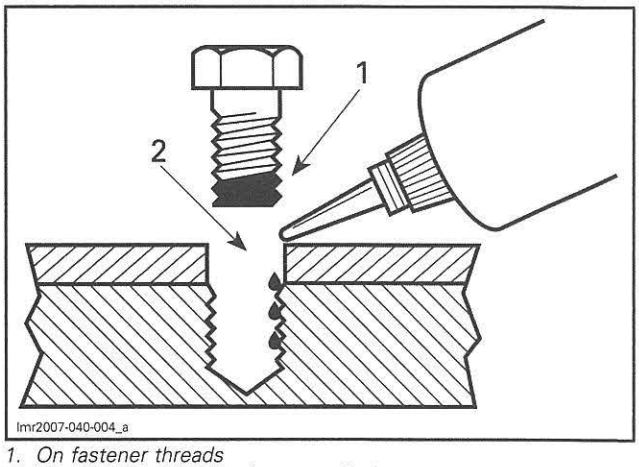

1. On fastener threads
2. On threads and at the bottom of hole

1. Clean threads (bolt and hole) with solvent.
2. Apply LOCTITE PRIMER N (P/N 293 800 041) on threads (bolt and nut) and allow to dry for 30 seconds.
3. Choose proper strength Loctite threadlocker.

4. Apply several drops along the threaded hole and at the bottom of the hole.
5. Apply several drops on bolt threads.
6. Tighten as required.

Threadlocker Application for Stud Installation in Blind Holes

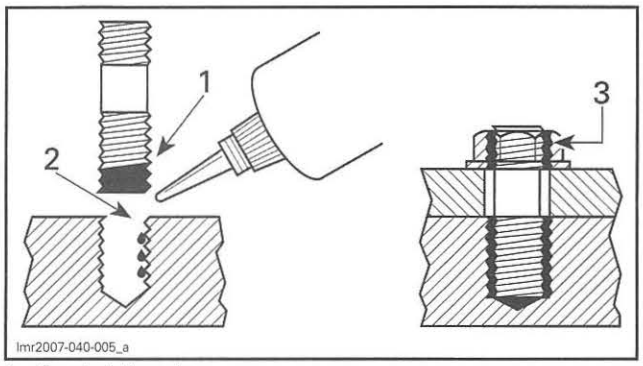

1. On stud threads
2. On threads and in the hole
3. On retaining nut threads

1. Clean threads (stud and hole) with solvent.
2. Apply LOCTITE PRIMER N (P/N 293 800 041) on threads and allow to dry.
3. Put 2 or 3 drops of proper strength Loctite threadlocker on female threads and in hole.

NOTE: To avoid a hydro lock situation, do not apply too much Loctite.

4. Apply several drops of proper strength Loctite on stud threads.
5. Install stud.
6. Install cover, part, etc.
7. Apply a few drops of proper strength Loctite on uncovered stud threads.
8. Install and tighten retaining nut(s) as required.

Threadlocker Application for Pre-Assembled Parts

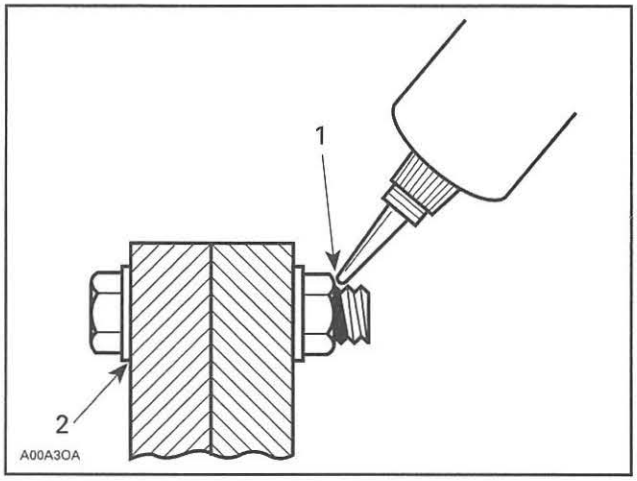

1. Apply here
2. Do not apply

1. Clean bolts and nuts with solvent.
2. Assemble components.
3. Tighten nuts.
4. Apply a few drops of proper strength Loctite on bolt/nut contact surfaces.
5. Avoid touching metal with tip of flask.

NOTE: For preventive maintenance on existing equipment, retighten nuts and apply proper strength Loctite on bolt/nut contact surfaces.

Threadlocker Application for an Adjustment Screw

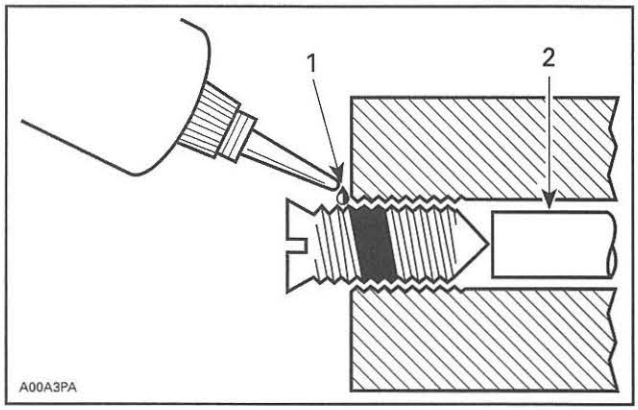

1. Apply here
2. Plunger

1. Adjust screw to proper setting.
2. Apply a few drops of proper strength Loctite threadlocker on screw/body contact surfaces.
3. Avoid touching metal with tip of flask.

NOTE: If it is difficult to readjust, heat screw with a soldering iron (232°C (450°F)).

Application for Stripped Thread Repair

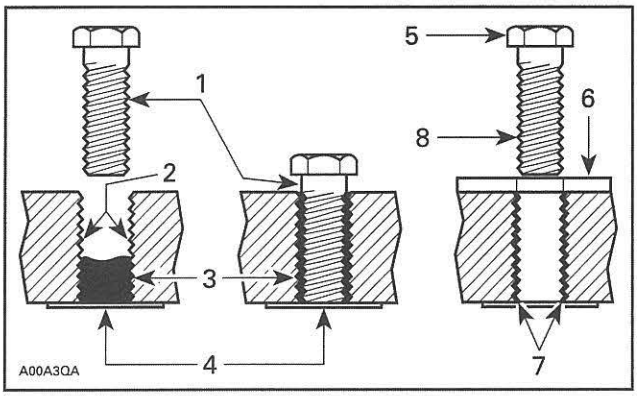

1. *Release agent*
2. *Stripped threads*
3. *Form-A-Thread*
4. *Tape*
5. *Cleaned bolt*
6. *Plate*
7. *New threads*
8. *Threadlocker*

Standard Thread Repair

Follow instructions on Loctite FORM-A-THREAD 81668 package.

If a plate is used to align bolt:

1. Apply release agent on mating surfaces.
2. Put waxed paper or similar film on the surfaces.
3. Twist bolt when inserting it to improve thread conformation.

NOTE: NOT intended for engine stud repairs.

Repair of Small Holes/Fine Threads

Option 1: Enlarge damaged hole, then follow *STANDARD THREAD REPAIR* procedure.

Option 2: Apply FORM-A-THREAD on the screw and insert in damaged hole.

Permanent Stud Installation (Light Duty)

1. Use a stud of the desired thread length.
2. DO NOT apply release agent on stud.
3. Follow Standard Thread Repair procedure.
4. Allow 30 minutes for Loctite FORM-A-THREAD to cure.
5. Complete part assembly.

Gasket Compound Application

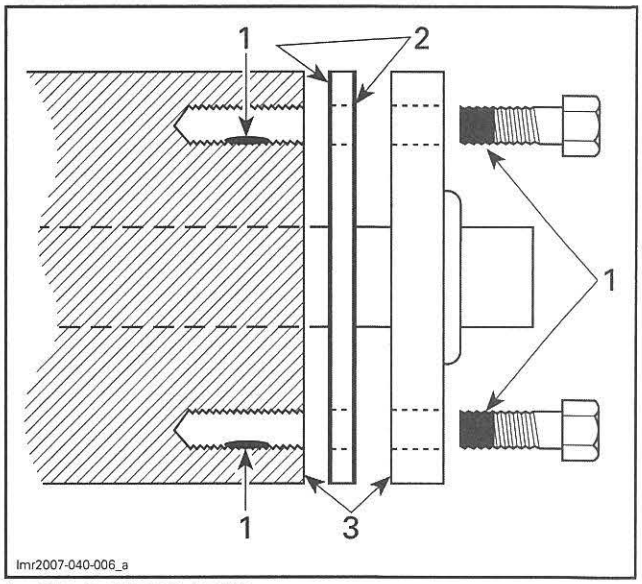

1. *Proper strength Loctite*
2. *Loctite Primer N (P/N 293 800 041) and Gasket Eliminator 518 (P/N 293 800 038) on both sides of gasket*
3. *Loctite Primer N only*

1. Remove old gasket and other contaminants using LOCTITE CHISEL (GASKET REMOVER) (P/N 413 708 500). Use a mechanical means only if necessary.

NOTE: Avoid grinding.

2. Clean both mating surfaces with solvent.
3. Spray Loctite Primer N on both mating surfaces and on both sides of gasket and allow to dry 1 or 2 minutes.
4. Apply LOCTITE 518 (P/N 293 800 038) on both sides of gasket, using a clean applicator.
5. Place gasket on mating surfaces and assemble parts immediately.

NOTE: If the cover is bolted to blind holes, apply proper strength Loctite in the hole and on threads. Tighten fastener.

If holes are sunken, apply proper strength Loctite on bolt threads.

6. Tighten as usual.

Threadlocker Application for Mounting on a Shaft

Mounting with a Press

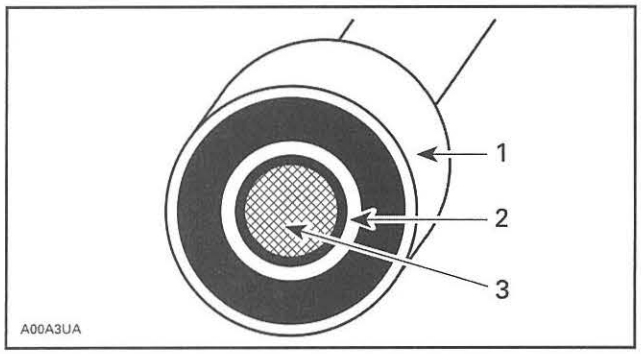

1. Bearing
2. Proper strength Loctite
3. Shaft

1. Clean shaft external contact surface.
2. Clean internal contact surface of part to be installed on shaft.
3. Apply a strip of proper strength Loctite on circumference of shaft contact surface at insertion or engagement point.

NOTE: Retaining compound is always forced out when applied on shaft.

4. DO NOT use antiseize Loctite or any similar product.
5. No curing period is required.

Mounting in Tandem

1. Apply retaining compound on internal contact surface (bore) of parts to be installed.
2. Continue parts assembly as per previous illustration.

Threadlocker Application for Case-In Components (Metallic Gaskets)

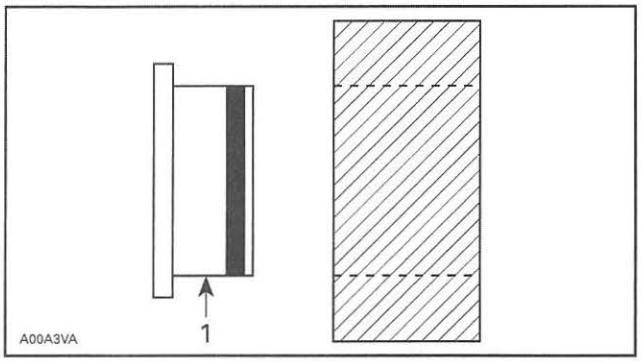

1. Proper strength Loctite

1. Clean inner housing diameter and outer gasket diameter.
2. Spray housing and gasket with LOCTITE PRIMER N (P/N 293 800 041).
3. Apply a strip of proper strength Loctite on leading edge of outer metallic gasket diameter.

NOTE: Any Loctite product can be used here. A low strength liquid is recommended as normal strength and gap are required.

4. Install according to standard procedure.
5. Wipe off excess product.
6. Allow 30 minutes for product to cure.

NOTE: Normally used on worn-out housings to prevent leaking or sliding.

It is generally not necessary to remove gasket compound applied on outer gasket diameter.

SERVICE TOOLS INDEX

3-PIN MAGNETO HARNESS ADAPTER
(P/N 529 036 016)



Page: 101–102

4-PIN SOCKET
(P/N 529 035 948)



Page: 58, 61

ADAPTER HOSE
(P/N 529 035 652)

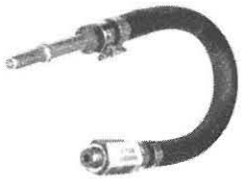

Page: 115

ALIGNMENT SHAFT ADAPTER
(P/N 529 035 719)

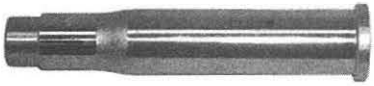

Page: 27–28

ALIGNMENT SHAFT SUPPORT
(P/N 529 035 506)



Page: 27

ALIGNMENT SHAFT
(P/N 295 000 141)



Page: 27–28

BACK PROBE TEST WIRES
(P/N 529 036 063)

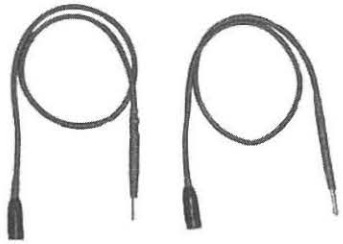

Page: 133

BEARING SUPPORT/PUSHER
(P/N 529 035 950)



Page: 60–61

BLIND HOLE BEARING PULLER SET
(P/N 529 036 117)



Page: 101

CAMSHAFT LOCKING TOOL
(P/N 529 035 839)



Page: 53, 158

CRANKSHAFT LOCKING TOOL
(P/N 529 035 821)



Page: 180, 183, 189

CRIMPING TOOL (HEAVY GAUGE WIRE)
(P/N 529 035 730)

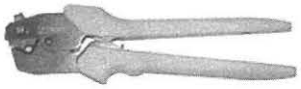

Page: 777

D.E.S.S. POST REMOVER
(P/N 529 035 943)



Page: 337

DIAGNOSTIC HARNESS
(P/N 529 036 188)

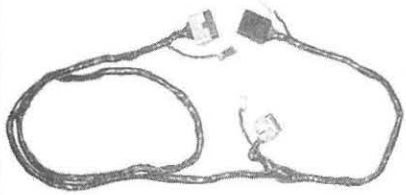

Page: 257, 317, 336–337, 361, 413, 416–417, 451, 467, 469, 772

DIGITAL INDUCTION TACHOMETER
(P/N 529 014 500)



Page: 266

DRIVE SHAFT ADAPTER
(P/N 529 035 985)



Page: 151

SERVICE TOOLS INDEX

DRIVE SHAFT C-CLIP REMOVER
(P/N 529 036 026)



Page: 511

ECM ADAPTER TOOL
(P/N 529 036 166)



Page: 117, 134, 268, 271, 281, 289, 294–295, 297–298, 300, 313, 332, 337, 360, 364, 767

ECM TERMINAL REMOVER 2.25
(P/N 529 036 175)



Page: 767

ECM TERMINAL REMOVER 3.36
(P/N 529 036 174)



Page: 767

ENGINE LEAK DOWN TEST KIT
(P/N 529 035 661)



Page: 152

FLOATING RING TOOL (TYPE I)
(P/N 529 035 841)



Page: 512, 517

FLOATING RING TOOL (TYPE II)
(P/N 529 036 116)

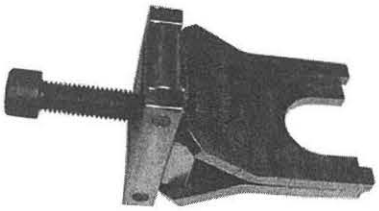

Page: 512, 517

FLUKE 115 MULTIMETER
(P/N 529 035 868)



Page: 117, 133–134, 257, 261, 263, 268, 271–272, 280–281, 287, 289, 291, 294, 297–298, 312, 318, 331–332, 336–337, 360–361, 363–364, 412, 414, 416, 418, 422, 451, 467, 474–475, 487, 573–576

FLUSHING CONNECTOR ADAPTER
(P/N 295 500 473)



Page: 84

FUEL HOSE ADAPTER
(P/N 529 036 023)



Page: 310

FUEL HOSE DISCONNECT TOOL
(P/N 529 036 037)



Page: 276

FUEL PUMP MODULE SOCKET
(P/N 529 036 125)



Page: 315

HANDLE
(P/N 420 877 650)



Page: 101

IMPELLER REMOVER/INSTALLER
(P/N 529 035 820)



Page: 100, 498–499, 501, 503, 506

SERVICE TOOLS INDEX

IMPELLER REMOVER/INSTALLER
(P/N 529 035 956)



Page: 498–499, 501, 503, 506

IMPELLER SHAFT BEARING TOOL
(P/N 529 036 168)



Page: 502, 504

IMPELLER SHAFT PUSHER
(P/N 529 035 955)



Page: 502, 504

LARGE HOSE PINCHER
(P/N 529 032 500)

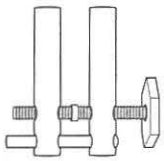

Page: 19, 73

LEAK TEST KIT
(P/N 529 033 100)

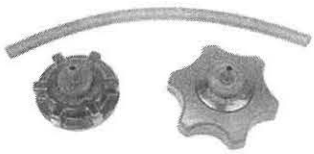

Page: 307

MAGNETO HARNESS 6 PINS
(P/N 295 000 136)



Page: 573

MPI-2 DIAGNOSTIC CABLE
(P/N 710 000 851)



Page: 203

MPI-2 INTERFACE CARD
(P/N 529 036 018)

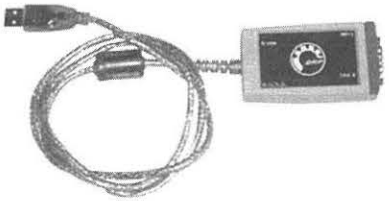

Page: 203–204

NEEDLE BEARING PUSHER
(P/N 529 036 237)



Page: 63

OETIKER PLIERS
(P/N 295 000 070)

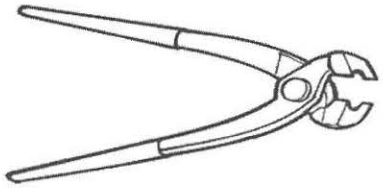

Page: 99, 144, 312

OIL SEAL GUIDE
(P/N 529 035 822)



Page: 122

PISTON CIRCLIP INSTALLER
(P/N 529 035 765)



Page: 177

PRESSURE CAP
(P/N 529 036 172)

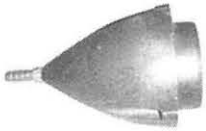

Page: 492

PRESSURE GAUGE
(P/N 529 035 709)



Page: 115, 310

PTO SUPPORT TOOL
(P/N 529 035 842)



Page: 513, 515

SERVICE TOOLS INDEX

PUMP PLATE
(P/N 529 036 224)

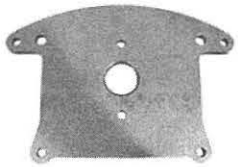

Page: 27, 493

SEAL/BEARING PUSHER
(P/N 529 035 819)



Page: 505

STARTER DRIVE SEAL PUSHER
(P/N 420 876 502)

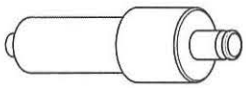

Page: 101

STEERING CABLE TOOL
(P/N 295 000 145)

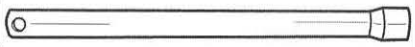

Page: 444

SUCTION PUMP
(P/N 529 035 880)



Page: 18, 95, 113

SUPERCHARGER GEAR HOLDER
(P/N 529 036 025)



Page: 54

SUPERCHARGER OIL SPRAY NOZZLE TOOL
(P/N 529 036 134)



Page: 127

SUPERCHARGER RETAINING KEY
(P/N 529 036 027)



Page: 57–58, 64

SUPERTANIUM DRILL BIT 3/16"
(P/N 529 031 800)



Page: 529, 550, 584, 604–605, 608, 638, 673–674, 677

SUPPORT PLATE
(P/N 529 035 947)



Page: 54, 57, 60–61

TEST CAP
(P/N 529 035 991)



Page: 143

TORX ADAPTER
(P/N 529 035 938)



Page: 56, 65

VACUUM/PRESSURE PUMP
(P/N 529 021 800)



Page: 68, 73, 143, 308–309, 355, 492

VALVE GUIDE PUSHER (6 MM)
(P/N 529 036 087)



Page: 167

VALVE GUIDE REMOVER (6 MM)
(P/N 529 036 086)



Page: 167

VALVE SPRING COMPRESSOR CUP
(P/N 529 036 073)



Page: 162

VALVE SPRING COMPRESSOR
(P/N 529 035 724)



Page: 162

WATER PUMP SEAL PUSHER
(P/N 529 035 823)

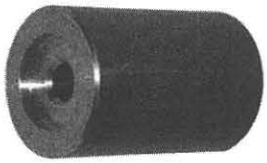

Page: 122–123

MAINTENANCE SCHEDULE

Maintenance is very important for keeping the watercraft in a safe operating condition. The watercraft should be serviced as per the maintenance schedule.

Disregard the information pertaining to the following systems if the watercraft is not equipped with these features:

- iBR (intelligent Brake and Reverse)
- iS (intelligent Suspension)
- aS (adjustable Suspension).

Carry out all maintenance as listed in the schedule whenever the hours or time of each column is reached.

⚠ WARNING

Failure to properly maintain the watercraft according to the maintenance schedule and procedures can make it unsafe to operate.

The maintenance schedule does not exempt the pre-ride inspection.

A: ADJUST C: CLEAN I: INSPECT L: LUBRICATE R: REPLACE O: OPERATOR D: DEALER	FIRST 25 HOURS OR 6 MONTHS	EVERY 100 HOURS OR 1 YEAR	EVERY 200 HOURS OR 2 YEARS	TO BE PERFORMED BY	
PART/TASK					**NOTE**
ENGINE					
Engine oil and filter	R	R		D	(1) Every 10 hours in salt water use. (10) Replace at 200 hours, irrespective of the number of years.
Rubber mounts	I	I		D	
Corrosion protection (Spray an anti-corrosion lubricant to metallic components in engine compartment)	L (1)			O	
Supercharger clutch (215/260 engines)			R(10)	D	
EXHAUST SYSTEM					
Exhaust system	I	I, C (2)		O/D	(2) Daily flushing in salt water or dirty water use.
COOLING SYSTEM					
Hose and fasteners	I		I	D	—
Coolant	I		R	D	
FUEL SYSTEM					
iTC lever (3)		I, L		O/D	(3) See NOTE 1 after maintenance schedule.
Fuel cap, filler neck, fuel tank, fuel tank straps, fuel lines and connections	I	I (4)		D	(4) At storage period or after 100 hours of use whichever comes first.
Fuel system leak test	I	I		D	
Throttle body	I	I		D	
AIR INTAKE SYSTEM					
Air intake silencer	I	I, C		D	—
ELECTRONIC MANAGEMENT SYSTEMS					
Fault codes	I	I		D	—
ELECTRICAL SYSTEM					
Spark plugs	I	I	R	D	(5) Inspect once a month. Add electrolyte as required.
Ignition coils		I, L		D	
Electrical connections and fastening (ignition system, starting system, fuel injectors, fuse boxes etc.)	I	I		D	
Engine cut-off switch	I	I		D	
Monitoring beeper	I	I		D	
Battery and fasteners	I (5)			D	
STEERING SYSTEM					
Steering cable and connections	I	I		D	(6) Inspect operation
Steering nozzle bushings	I	I		D	
O.T.A.S. (6)	I	I		D	

A: ADJUST C: CLEAN I: INSPECT L: LUBRICATE R: REPLACE O: OPERATOR D: DEALER	FIRST 25 HOURS OR 6 MONTHS	EVERY 100 HOURS OR 1 YEAR	EVERY 200 HOURS OR 2 YEARS	TO BE PERFORMED BY	
PART/TASK					**NOTE**
PROPULSION SYSTEM					
Carbon ring and rubber boot (drive shaft)	I	I		D	(4) At storage period or after 100 hours of use whichever comes first. (8) Inspect each month (more often in salt water use) and change when necessary.
Impeller boot	I	I		D	
Impeller shaft seal, sleeve and O-ring		I (4)		D	
Drive shaft/impeller splines		I, L		D	
Sacrificial anode (if so equipped)		I (8)		D	
Impeller and impeller wear ring clearance	I	I		D	
Pump mounts	I	I		D	
iBR SYSTEM (intelligent Brake and Reverse)					
iBR lever (3)		I, L		O/D	(3) See NOTE 1 after maintenance schedule. (4) At storage period or after 100 hours of use whichever comes first. (9) See NOTE 2 after maintenance schedule.
iBR gate backlash	I	I		D	
iBR support plates	I	I		D	
iBR friction sleeves	I	I		D	
iBR connecting arms, sleeves and bushings	I	I		D	
iBR U lever, VTS trim ring, iBR gate and bushings	I	I		D	
iBR U arm retaining screws	I (9)	I (4) (9)		D	
iBR protective guard	I	I		D	
iS SYSTEM (intelligent Suspension)					
iS oil (7)		I		D	(7) Check pump reservoir oil level and for system leaks.
iS position sensor		I		D	
aS SYSTEM (adjustable Suspension)					
Nitrogen remote reservoir (adjustment knob, mounts)		I		D	—
HULL AND BODY					
Hull		I		O	—
Ride plate and water intake grate		I		O	

NOTE 1: The iTC and iBR levers should be inspected by depressing and releasing the levers to check for freedom of movement. If any friction is felt, the lever must be taken apart, cleaned, inspected for wear and lubricated, refer to *INTELLIGENT THROTTLE CONTROL (ITC)* and *STEERING AND O.T.A.S.* subsections.

NOTE 2: Ensure proper torque of iBR U arm to iBR actuator shaft retaining screws. If retaining screws found loose, do not re-torque them. Replace them with new ones.

STORAGE PROCEDURE

SERVICE PRODUCTS

Description	Part Number	Page
DOW CORNING 111	413 707 000	13
LOCTITE 767 (ANTISEIZE LUBRICANT)	293 800 070	13
XPS FUEL STABILIZER	413 408 601	11
XPS LUBE	293 600 016	11, 13–14

PROCEDURES

PROPULSION SYSTEM

Propulsion System Cleaning and Protection

Clean jet pump by spraying water in its inlet and outlet and then apply a coating of XPS LUBE (P/N 293 600 016) or equivalent.

Jet Pump Inspection

Remove impeller cover and check if jet pump is water contaminated; if so, refer to *JET PUMP* subsection for the repair procedure.

FUEL SYSTEM

Fuel System Inspection

Verify fuel system. Check fuel hoses for leaks. Replace damaged hoses or clamps if necessary.

Fuel System Protection

XPS FUEL STABILIZER (P/N 413 408 601) (or equivalent) should be added in the fuel tank to prevent fuel deterioration and fuel system gumming. Follow manufacturer's instructions for proper use.

NOTICE **Fuel stabilizer should be added prior to engine lubrication to ensure fuel system component protection against varnish deposits.**

Fill up fuel tank completely. Ensure there is no water inside fuel tank.

NOTICE **Should any water be trapped inside fuel tank, severe internal damage will occur to the fuel injection system.**

ENGINE

Engine Oil and Filter Replacement

Change engine oil and filter. Refer to *LUBRICATION SYSTEM* subsection.

Exhaust System Flushing

Flush the exhaust system. Refer to *EXHAUST SYSTEM* subsection.

Intercooler Draining (260 Engine)

It is important to expel any trapped water that may have accumulated from condensation in the external intercooler.

NOTICE **Failure to drain the intercooler may cause severe damage to this component.**

Proceed as follows:

Models With Suspension

1. Open the boarding platform and remove the RH storage bin.
2. Ensure there is an alignment line drawn on the intercooler outlet hose. This will ensure the hose is not twisted or kinked on reinstallation.
3. Loosen the clamp retaining the intercooler outlet hose.
4. Remove the intercooler outlet hose from the intercooler.

NOTE: This hose feeds the inlet of the throttle body.

iS Models

5. Drape a couple of shop rags over the iS module to protect it from any expelled water from the intercooler.

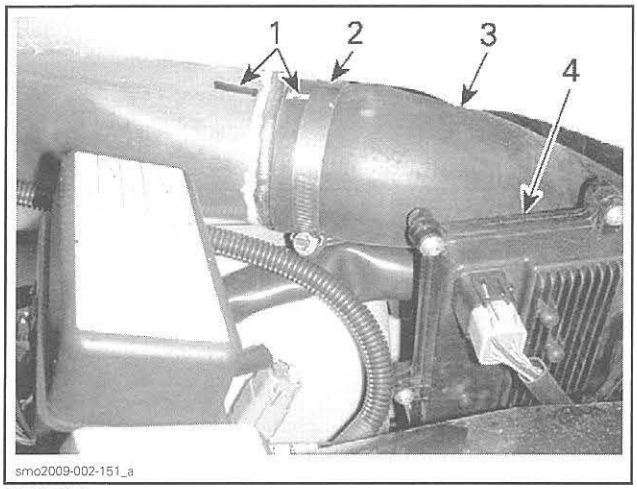

TYPICAL
1. *Hose alignment lines*
2. *Hose clamp*
3. *Intercooler outlet hose*
4. *iS module*

All Models

6. Start engine and rev up to 4000 RPM several times. Water will be expelled from the intercooler.

NOTE: Prevent air intake system from aspirating foreign objects which may cause severe engine or damage.

7. Stop engine.
8. Properly align and reinstall hose on intercooler.
9. Torque intercooler hose clamp as specified.

INTERCOOLER HOSE CLAMP TORQUE
4 N•m (35 lbf•**in**)

Models Without Suspension

1. Open the seat.
2. Ensure there is an alignment line drawn on the throttle body inlet hose. This will ensure the hose is not twisted or kinked on reinstallation.
3. Loosen the clamp retaining the hose to the throttle body.
4. Remove the hose from the throttle body and direct it away from the throttle body and other components.
5. Start engine and rev up to 4000 RPM several times. Water will be expelled from the intercooler.

NOTE: Prevent air intake system from aspirating foreign objects which may cause severe engine or damage.

6. Stop engine.
7. Properly align and reinstall hose on throttle body.
8. Torque intercooler hose clamp as specified.

INTERCOOLER HOSE CLAMP TORQUE
4 N•m (35 lbf•**in**)

Exhaust System Draining

The exhaust system is self draining, but the exhaust manifold and intercooler (215 engine) need to be drained to avoid damages should the watercraft be stored in an area where the temperature attains the freezing point of water.

Using the flushing connector located at the rear of vehicle, inject pressurized air (at 380 kPa (55 PSI)) in the system until there is no more water flowing from jet pump.

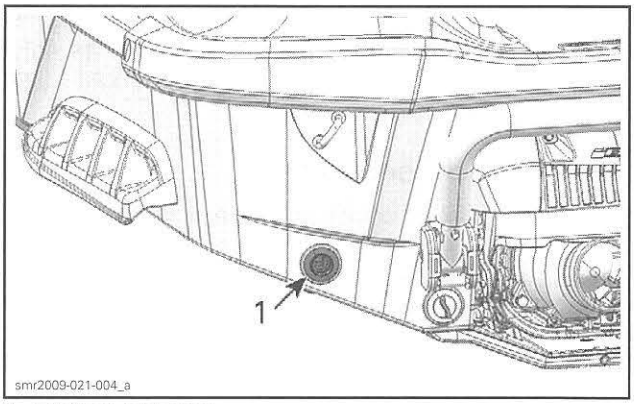

1. *Flushing connector*

The following hose can be fabricated to ease draining procedure.

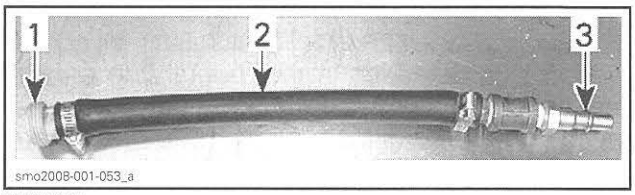

TYPICAL
1. *Flushing adaptor (P/N 295 500 473)*
2. *Hose 13 mm (1/2 in)*
3. *Air hose male adapter*

NOTICE Failure to drain the exhaust manifold may cause severe damage to components.

Engine Coolant Replacement

Antifreeze should be replaced every 200 hours or every two years to prevent antifreeze deterioration.

NOTICE Failure to replace the antifreeze as recommended may allow its degradation that could result in poor engine cooling.

If coolant is not replaced, test the coolant density using an antifreeze hydrometer.

Replace coolant if necessary. For the coolant replacement procedure, refer to *COOLING SYSTEM* subsection.

NOTICE **Improper antifreeze density may result in coolant freezing should the vehicle be stored in area where the freezing point is attained. This could seriously damage the engine.**

Engine Internal Lubrication

Engine must be lubricated to prevent corrosion on internal parts.

Lubrication of the engine is recommended at the end of the season and before any extended storage period to provide additional corrosion protection. This will lubricate the engine intake valves, the cylinders and the exhaust valves.

To lubricate the engine, proceed as follows:

1. Open seat.

Models With Suspension

2. Remove the rear ventilation box.

All Models

3. Disconnect ignition coil connectors.

⚠ WARNING

When disconnecting coil from spark plug, always disconnect coil from main harness first. Never check for engine ignition spark from an open coil and/or spark plug in the engine compartment as the spark may cause fuel vapors to ignite.

NOTICE **Never cut the locking ties of ignition coil connectors. This would allow mixing of the wires between cylinders.**

4. Clean the area around the ignition coils to avoid dirt falling into a cylinder.
5. Remove ignition coils.
6. Unscrew spark plugs.
7. Using an ignition coil as a puller, remove spark plugs.

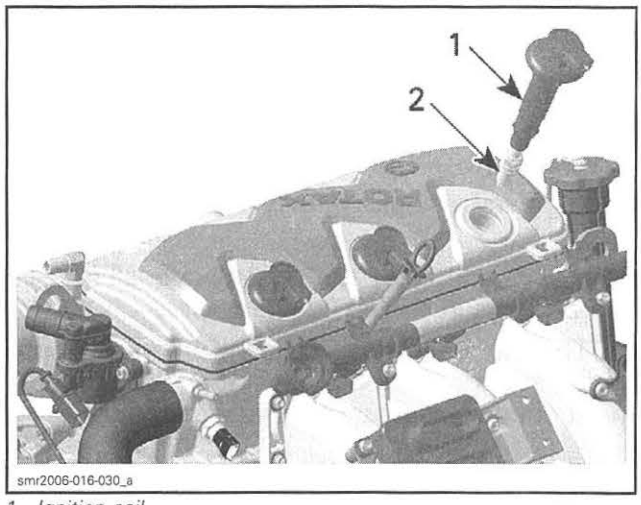

1. Ignition coil
2. Spark plug

8. Spray XPS LUBE (P/N 293 600 016) into each spark plug hole.
9. Crank the engine a few turns to distribute the oil on cylinder wall.

NOTE: To crank engine, use the drowned mode to avoid injecting fuel. Fully depress throttle lever and hold for cranking engine.

10. Apply LOCTITE 767 (ANTISEIZE LUBRICANT) (P/N 293 800 070) on spark plug threads then reinstall them.

NOTE: Refer to *IGNITION SYSTEM* subsection for details on installing the spark plugs and ignition coils.

11. Prior to inserting the ignition coil onto its spark plug, apply some DOW CORNING 111 (P/N 413 707 000) around the seal area that touches the spark plug hole.
12. Reinstall ignition coils.
13. Ensure the seal seats properly with the engine top surface.
14. Reconnect ignition coil connectors.
15. Install all other removed parts.

ELECTRICAL SYSTEM

Battery Removal

For battery removal, cleaning and storage, refer to *CHARGING SYSTEM* subsection.

ENGINE COMPARTMENT

Engine Compartment Cleaning

1. Clean the bilge with hot water and a mild detergent, or using bilge cleaner.
2. Rinse thoroughly.

3. Lift front end of watercraft to completely drain bilge. Refer to appropriate *HULL* subsection for bilge drain plug removal.

Anticorrosion Treatment

Wipe off any residual water in the engine compartment.

Spray XPS LUBE (P/N 293 600 016) over all metallic components in engine compartment.

NOTE: The seat should be left partially open during storage. This will prevent engine compartment condensation and possible corrosion.

BODY AND HULL

Body and Hull Cleaning

Wash the body with a soap and water solution (only use a mild detergent). Rinse thoroughly with fresh water. Remove marine organisms from the hull.

NOTICE **Never clean body parts or hull with strong detergent, degreasing agent, paint thinner, acetone, etc.**

Replace damaged labels/decals.

Body Repair

If any repair is required, refer to *BODY* subsection.

Hull Repair

If any repair is required, refer to appropriate *HULL* subsection.

Body and Hull Protection

Apply a good quality marine wax on body and hull.

If the watercraft is to be stored outside, cover it with an opaque tarpaulin to prevent sun rays and grime from affecting the plastic components, watercraft finish as well as preventing dust accumulation.

NOTICE **The watercraft should never be left in water for storage, stored in direct sunlight or stored in a plastic bag.**

Midwest Manuals
Green Manuals
Paperless Manuals
For a Better Tomorrow
If you bought this manual from any other seller please leave them NEGATIVE feedback and notify me at bestshopmanuals@gmail.com

WATERCRAFT
SERVICE
Bulletin

October 29, 2010 Subject: **Storage Procedure** No. **2010-7**

YEAR	MODEL	MODEL NUMBER	SERIAL NUMBER
2010	All	All	All

NOTE: Carry out the following tasks in the same order as detailed in this bulletin.

PROCEDURES

Propulsion System

Jet Pump Cleaning

Clean jet pump by spraying water in its inlet and outlet and then apply a coating of XPS LUBE (P/N 293 600 016) or equivalent.

⚠ WARNING

Always remove safety lanyard cap from post to prevent unexpected engine starting before cleaning the jet pump area. Engine must not be running for this operation.

Jet Pump Inspection

Remove impeller cover and check if jet pump is water contaminated; if so, refer to *JET PUMP* subsection in the appropriate *SHOP MANUAL* for the repair procedure.

Drive Shaft Corrosion Protection

No protection against corrosion is required since the drive shaft is rubber-coated.

Fuel System

Fuel System Inspection

Verify fuel system. Check fuel hoses for leaks. Replace damaged hoses or clamps if necessary.

NOTICE **Salt water use may cause clamps to prematurely corrode. Therefore, they would require a closer look and a more frequent preventive replacement.**

Fuel System Protection

The BRP FUEL STABILIZER (P/N 413 408 600) or equivalent should be added in fuel tank to prevent fuel deterioration and fuel system gumming. Follow manufacturer's instructions for proper use.

NOTICE **Fuel stabilizer should be added prior to engine lubrication to ensure fuel system components protection against varnish deposits.**

Engine

Engine Oil and Filter Replacement

Change engine oil and filter. Refer to *LUBRICATION SYSTEM* subsection in the appropriate *SHOP MANUAL*.

Intercooler Draining

It is important to expel any trapped water that may have accumulated from condensation in the external intercooler.

NOTICE **Failure to drain the intercooler may cause severe damage to this components.**

All 255 Engine Models except iS Series

1. Removed the intake hose from throttle body.

Printed in Canada. (sbs2010-005 en AP)
©2010 Bombardier Recreational Products Inc. and BRP US Inc. All rights reserved.
®™ and the BRP logo are trademarks of Bombardier Recreational Products Inc. or its affiliates.

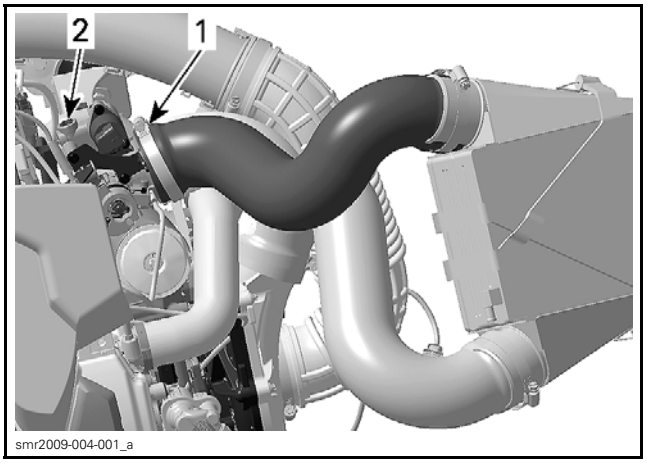

smr2009-004-001_a

1. Intake hose
2. Throttle body

2. Start engine and rev up to 4000 RPMs several times. Water will be expelled from intercooler.


sbs2008-005-002

WATER EXPELLED FROM INTERCOOLER

3. Stop engine.
4. Liberally lubricate throttle body inside and out.
5. Clean off any lubrication on the throttle body intake hose flange.
6. Install air intake hose to the throttle body.

iS Series

Proceed as follows:

1. Loosen the clamp retaining the intercooler outlet hose.
2. Remove the intercooler outlet hose from the intercooler.

NOTE: This hose feeds the inlet of the throttle body.

3. Drape a couple of shop rags over the iS module to protect it from any expelled water from the intercooler.

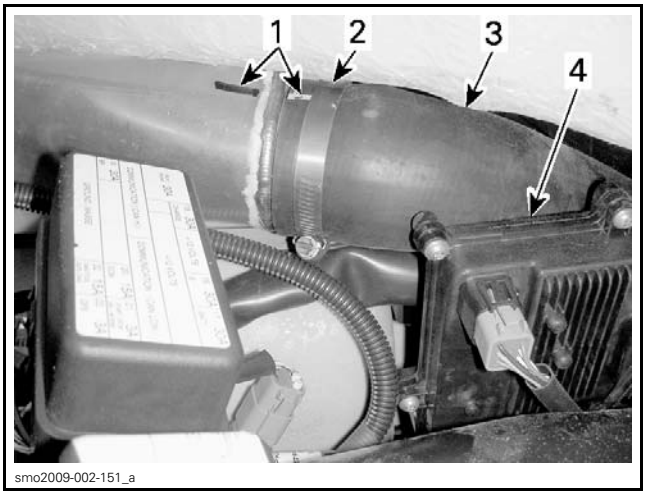

smo2009-002-151_a

1. Hose alignment lines
2. Hose clamp
3. Intercooler outlet hose
4. iS module

4. Start engine and rev up to 4000 RPMs several times. Water will be expelled from intercooler.

NOTE: Prevent air intake system from aspirating foreign objects which may cause severe engine or damage.

5. Stop engine.
6. Install intercooler outlet hose.

Exhaust System Protection

The exhaust system is self draining, but the exhaust manifold needs to be drained to avoid damages if watercraft is stored in area where freezing weather is present.

Using the flushing connector located at the rear of vehicle, inject pressurized air into system until there is no more water flowing from jet pump.

MODEL	AIR PRESSURE
iS Series	380 kPa (55 PSI)
All other models	689 kPa (100 PSI)

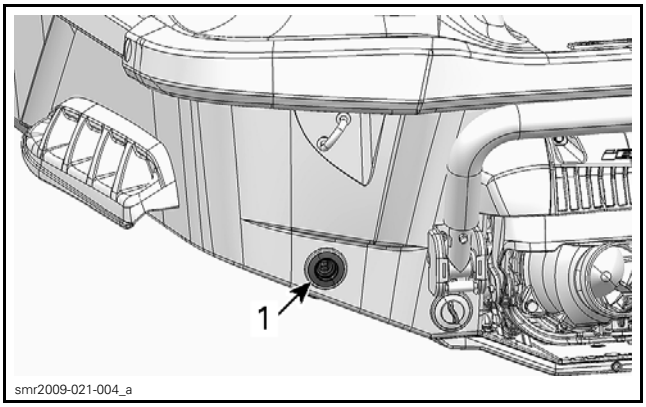

smr2009-021-004_a

TYPICAL – IS SERIES
1. Flushing connector

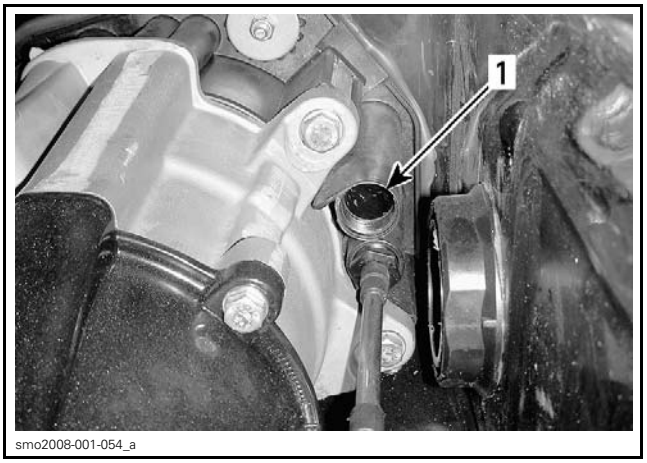

TYPICAL – ALL OTHER MODELS
1. Flushing connector — location may differ

The following hose can be fabricated to ease draining procedure.

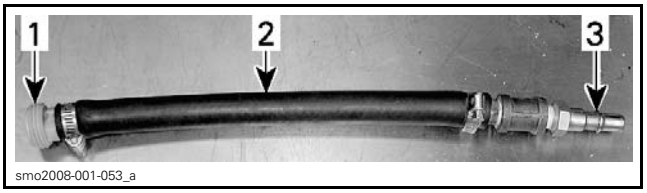

TYPICAL
1. Flushing adaptor (P/N 295 500 473)
2. Hose 13 mm (1/2 in)
3. Air hose male adapter

NOTICE Failure to drain the exhaust manifold may cause severe damage to this components.

Engine Coolant Replacement

Antifreeze should be replaced every 200 hours or every two years to prevent antifreeze deterioration.

NOTICE Failure to replace the antifreeze as recommended may allow its degradation that could result in poor engine cooling.

If coolant is not replaced, test the coolant density using an antifreeze hydrometer.

Replace coolant if necessary. For the coolant replacement procedure, refer to *COOLING SYSTEM* subsection in the appropriate *SHOP MANUAL*.

NOTICE Improper antifreeze density might lead coolant to freeze if vehicle is stored in area where freezing point is reached. This would seriously damage the engine.

Engine Internal Lubrication

Engine must be lubricated to prevent corrosion on internal parts.

Lubrication of the engine is recommended at the end of the season and before any extended storage period to provide additional corrosion protection. This will lubricate the engine intake valves, the cylinders and the exhaust valves.

To lubricate the engine, proceed as follows:

1. Open seat and remove the rear ventilation box.
2. On **iS series**, remove the rear ventilation box. For **all other models**, pull engine cover upward and remove it.
3. Disconnect ignition coil connectors.

⚠ WARNING

When disconnecting coil from spark plug, always disconnect coil from main harness first. Never check for engine ignition spark from an open coil and/or spark plug in the engine compartment as spark may cause fuel vapor to ignite.

NOTICE Never cut the locking ties of ignition coil connectors. This would allow mixing the wires between cylinders.

4. Clean ignition coil areas to avoid falling dirt into cylinder.
5. Remove ignition coils.
6. Unscrew spark plugs.
7. Using an ignition coil as a puller, remove spark plugs.

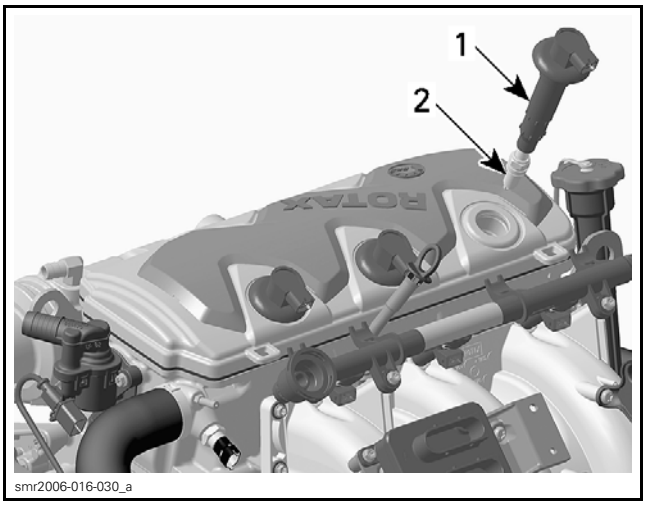

1. Ignition coil
2. Spark plug

8. Spray XPS LUBE (P/N 293 600 016) into each spark plug hole.
9. Crank the engine a few turns to distribute the oil on cylinder wall.

NOTE: To crank engine, use the drowned mode to avoid injecting fuel. Fully depress throttle lever and hold for cranking engine.

10. Apply LOCTITE 767 (ANTISEIZE LUBRICANT) (P/N 293 800 070) on spark plug threads then reinstall them.
11. Prior to inserting the ignition coil to its location, apply some DOW CORNING 111 (P/N 413 707 000) around the seal area that touches the spark plug hole.
12. Reinstall ignition coils.
13. Ensure the seal seats properly with the engine top surface.
14. Reconnect ignition coil connectors.
15. Install all other removed parts.

Electrical System

Battery Removal

For battery removal, cleaning and storage, refer to *CHARGING SYSTEM* subsection in the appropriate *SHOP MANUAL*.

Vehicle

Bilge Cleaning

Clean the bilge with hot water and mild detergent or with bilge cleaner.

Rinse thoroughly.

Lift front end of watercraft to completely drain bilge.

Body and Hull Cleaning

Wash the body with soap and water solution (only use mild detergent). Rinse thoroughly with fresh water. Remove marine organisms from the hull.

NOTICE **Never clean body parts or hull with strong detergent, degreasing agent, paint thinner, acetone, etc.**

Replace damaged labels/decals.

Body Repair

If any repair is needed, refer to *BODY* subsection in the appropriate *SHOP MANUAL*.

Anticorrosion Treatment

Wipe off any residual water in the engine compartment.

Spray XPS LUBE (P/N 293 600 016) over all metallic components in engine compartment.

Vehicle Protection

Apply a good quality marine wax on body and hull.

The seat should be left partially open during storage. This will prevent engine compartment condensation and possible corrosion.

If the watercraft is to be stored outside, cover it with an opaque tarpaulin to prevent sun rays and grime from affecting the plastic components, watercraft finish as well as preventing dust accumulation.

NOTICE **The watercraft should never be left in water for storage, stored in direct sunlight or stored in a plastic bag.**

PRESEASON PREPARATION

Proper vehicle preparation is necessary after the winter months or when a watercraft has not been used during 4 months.

Any worn, broken or damaged parts found during the storage procedure should have been replaced. If not, proceed with the replacement.

Referring to the maintenance schedule, carry out the maintenance procedures for every item specified in the column 100 HOURS OR 1 YEAR.

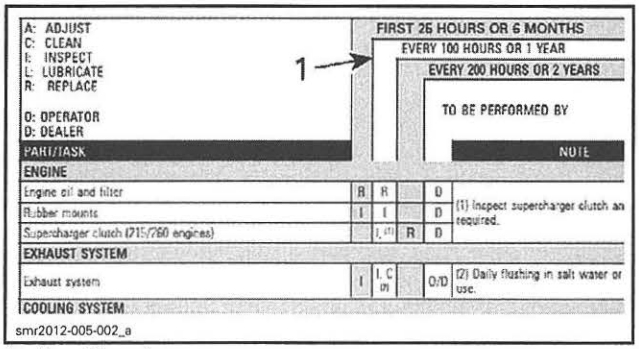

1. Use this column

Furthermore, proceed with the following:

Watercraft Prepared as per Storage Procedure

- Ensure battery is fully charged.
- Reinstall the battery.
- Test ride watercraft to confirm proper operation.

Watercraft Not Prepared as per Storage Procedure

- Ensure battery is fully charged.
- Replace engine oil and filter.
- Drain fuel tank and fill with fresh fuel.
- Reinstall the battery.
- Test ride watercraft to confirm proper operation.

SPECIAL PROCEDURES

SERVICE TOOLS

Description	Part Number	Page
LARGE HOSE PINCHER	529 032 500	19
SUCTION PUMP	529 035 880	18

GENERAL

Refer to the following special procedures according to the specific event. Procedures described may not be applicable to every watercraft model.

PROCEDURES

TOWING THE WATERCRAFT IN WATER

Special precautions should be taken when towing a Sea-Doo watercraft in water.

The maximum recommended towing speed is 24 km/h (15 MPH).

This will prevent the exhaust system from filling with water, which may lead to water being injected into and filling the engine. Without the engine running, there isn't any exhaust pressure to push the water out the exhaust outlet.

NOTICE **Failure to follow these instructions may result in damage to the engine. If you must tow a stranded watercraft in water, be sure not to exceed the maximum towing speed of 24 km/h (15 MPH).**

SUBMERGED WATERCRAFT

NOTICE **Never try to crank or start engine. Water trapped in the intake manifold would flow towards the engine and possible cause severe engine damage.**

1. Drain bilge.
2. If the watercraft was submerged in salt water, rinse the bilge and all components thoroughly with fresh water using a garden hose to stop the salt corroding effect.
3. Check for water in the intake system. If water found in the intake system, refer to *WATER-FLOODED ENGINE* in this subsection.

Engine Lubrication

Refer to *WATER-FLOODED ENGINE* in this subsection.

Fuel Inspection

Check fuel tank for water contamination. If necessary, siphon and refill with fresh fuel.

WATER-FLOODED ENGINE

If the engine is flooded with water, it must be serviced within a few hours after the event. Otherwise, the engine will have to be overhauled.

NOTICE

- **Never try to crank or start the engine. Water trapped in the intake manifold would enter the combustion chamber through the intake valves and may cause damage to the engine.**
- **An engine flooded with water must be properly drained, lubricant replaced (oil change), operated (boil out procedure), then lubricant replaced again, otherwise parts will be seriously damaged.**

Exhaust System Draining

If water is suspected to be in the exhaust system, remove the exhaust pipe and the muffler. Drain them or siphon the water out of them. Refer to *EXHAUST SYSTEM* subsection.

Intake System Draining

1. If water is present in the air intake silencer, empty it. Refer to *AIR INTAKE SYSTEM* subsection.
2. Remove the air intake silencer and check for water in the supercharger inlet hose. Remove hose to empty it.
3. Remove the water from blow-by valve hose.
4. If water is suspected in the intake manifold, remove the intake manifold and drain it. Then siphon the water out from the intake valve ports. Refer to *INTAKE MANIFOLD* subsection.

Supercharger Servicing

215 and 260 Engines

If there is water in the oil or in the supercharger inlet hose, the supercharger should be taken apart, all the components dried, and the slip clutch needle bearings and shaft ball bearings replaced. Refer to *SUPERCHARGER* subsection.

Engine Oil and Filter Replacement

If the engine oil is contaminated with water (oil will be milky), change the engine oil and filter as per following procedure.

Models with Suspension

Remove the deck extension. Refer to *BODY* subsection.

All Models

1. Using the SUCTION PUMP (P/N 529 035 880), siphon the contaminated oil from the engine reservoir through the dipstick hole.

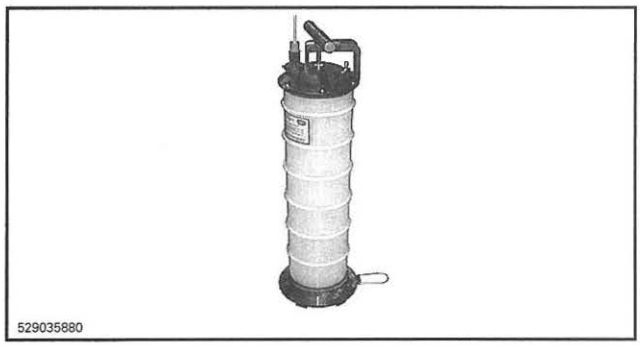

NOTICE **Never crank or start engine when siphon tube is in dipstick hole. Never start engine when there is no oil in engine.**

2. Remove the suction pump tube from the dipstick hole.
3. Fully depress throttle lever and HOLD it for cranking.
4. Crank the engine for 5 seconds.
5. Remove the oil filter cap and the oil filter. Refer to *LUBRICATION SYSTEM* subsection.
6. Again, siphon the contaminated oil from the oil filter reservoir.
7. Remove valve cover. Refer to *CYLINDER HEAD* subsection.

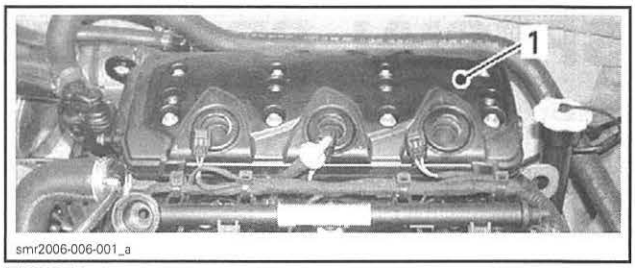

TYPICAL
1. Valve cover

8. Wrap a piece of tape around the suction pump tube 400 mm (16 in) from the end of the tube.
9. Insert the tube in the PTO area until the tape is even with the cylinder-block edge.
10. Siphon contaminated oil out.

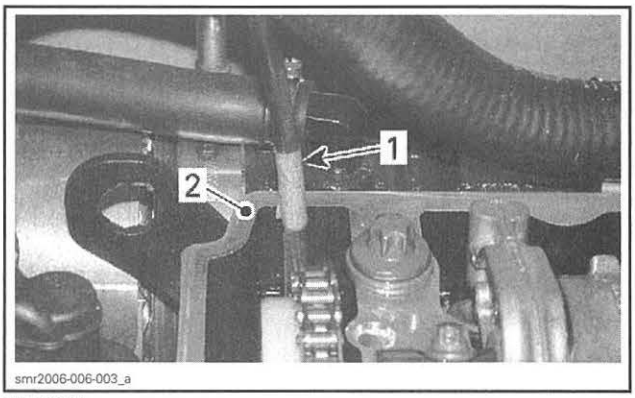

TYPICAL
1. Suction pump tube with tape
2. Edge of cylinder-block

11. Remove the suction pump tube.
12. Reinstall valve cover.
13. Install a NEW oil filter and reinstall the oil filter cap.
14. Replenish the engine with appropriate amount of the recommended engine oil. Refer to *LUBRICATION SYSTEM* subsection.
15. Proceed with the *BOIL OUT PROCEDURE* that follows.

NOTE: The boil out procedure is intended to evaporate a small quantity of water contained in the oil system.

Boil Out Procedure in a Test Tank or Tied to a Trailer with Watercraft in Water

1. Connect the vehicle to latest applicable B.U.D.S. version to monitor the coolant temperature. Coolant temperature must exceed 100°C (212°F) in order for the water to boil out. Once the boiling point is attained, the water will evaporate quickly.
2. Run the engine for 5 minutes at 3500 RPM.

⚠ WARNING

Be sure to safely secure the watercraft.

3. With the engine still running at 3500 RPM, install a LARGE HOSE PINCHER (P/N 529 032 500) on the coolant line going to the oil cooler.

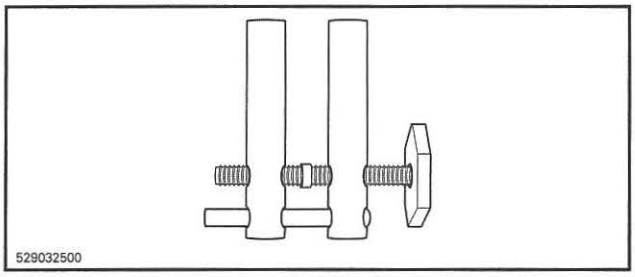

⚠ WARNING

Certain components in the engine compartment may be very hot. Direct contact may result in skin burn. Do not touch any electrical parts or jet pump area when the engine is running.

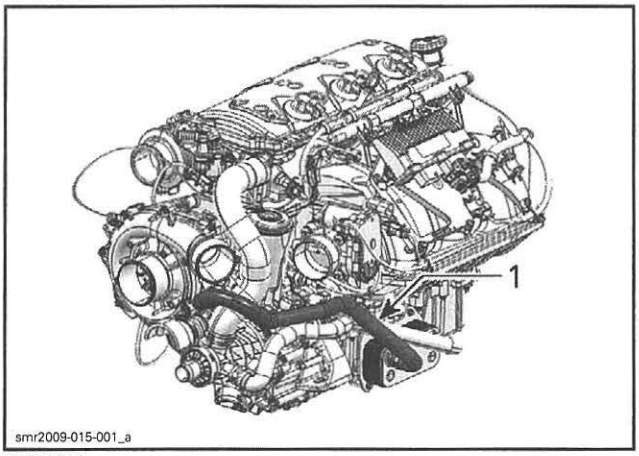

TYPICAL
1. Oil cooler coolant inlet hose

4. Continue to run the engine at 3500 RPM for 15 more minutes (20 minute total run time).
5. Shut the engine off.
6. Remove the hose pincher from coolant line going to the oil cooler.

NOTICE **Hose pincher must be removed prior to operating the watercraft. Failure to do this will result in damage to the engine.**

7. Change the oil and filter again.
8. Procedure is now complete.

CAPSIZED WATERCRAFT

Capsized for More than 5 Minutes

Refer to *WATER-FLOODED ENGINE* in this subsection.

ENGINE REMOVAL AND INSTALLATION

SERVICE TOOLS

Description	Part Number	Page
ALIGNMENT SHAFT ADAPTER	529 035 719	27–28
ALIGNMENT SHAFT SUPPORT	529 035 506	27
ALIGNMENT SHAFT	295 000 141	27–28
PUMP PLATE	529 036 224	27

SERVICE PRODUCTS

Description	Part Number	Page
LOCTITE 243 (BLUE)	293 800 060	27, 29
PULLEY FLANGE CLEANER	413 711 809	27

ENGINE SUPPORTS

GTS 130, GTI 130, GTI 155, GTR 215 and WAKE 155

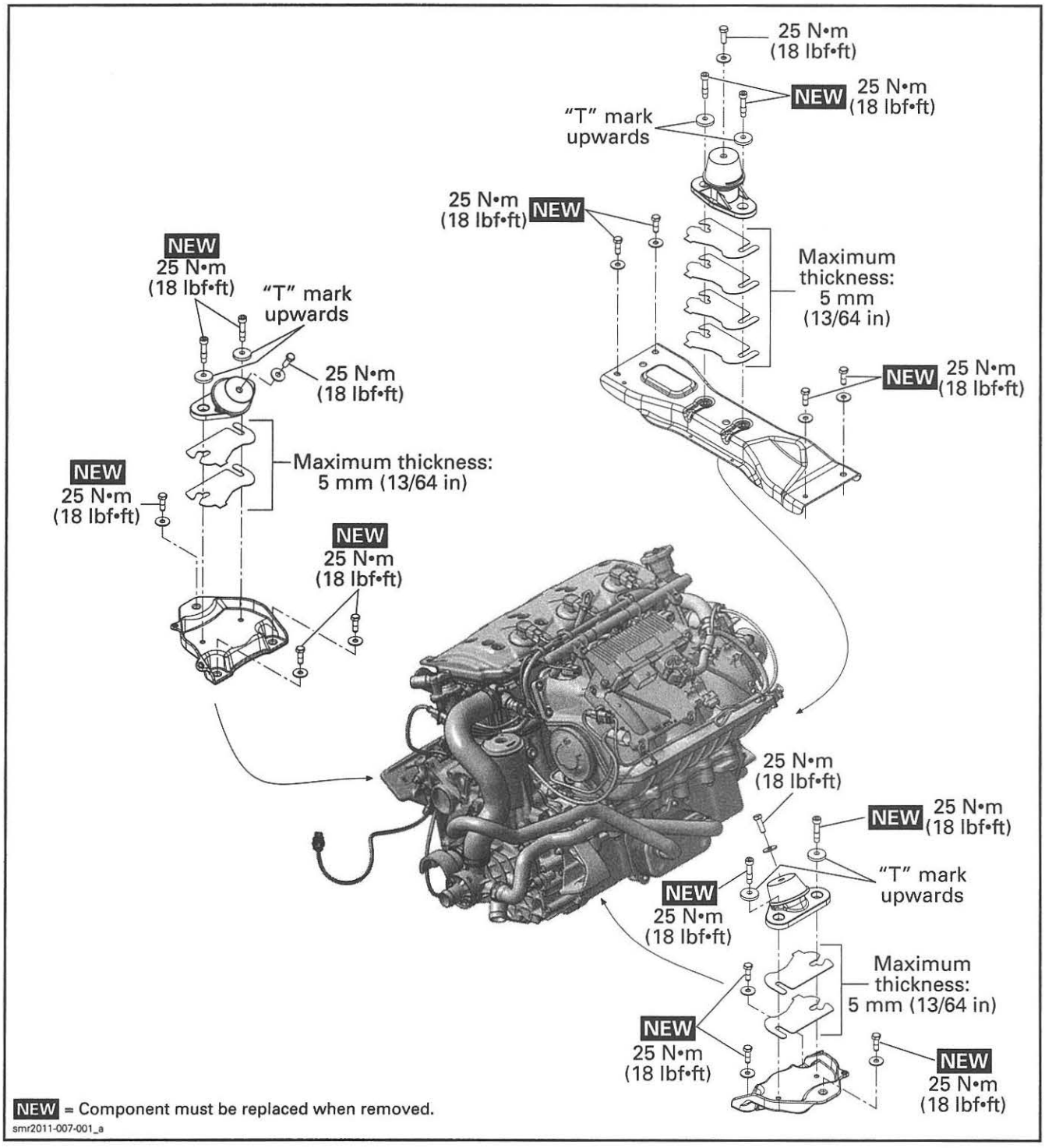

NEW = Component must be replaced when removed.

smr2011-007-001_a

GTX 155 and GTX S 155

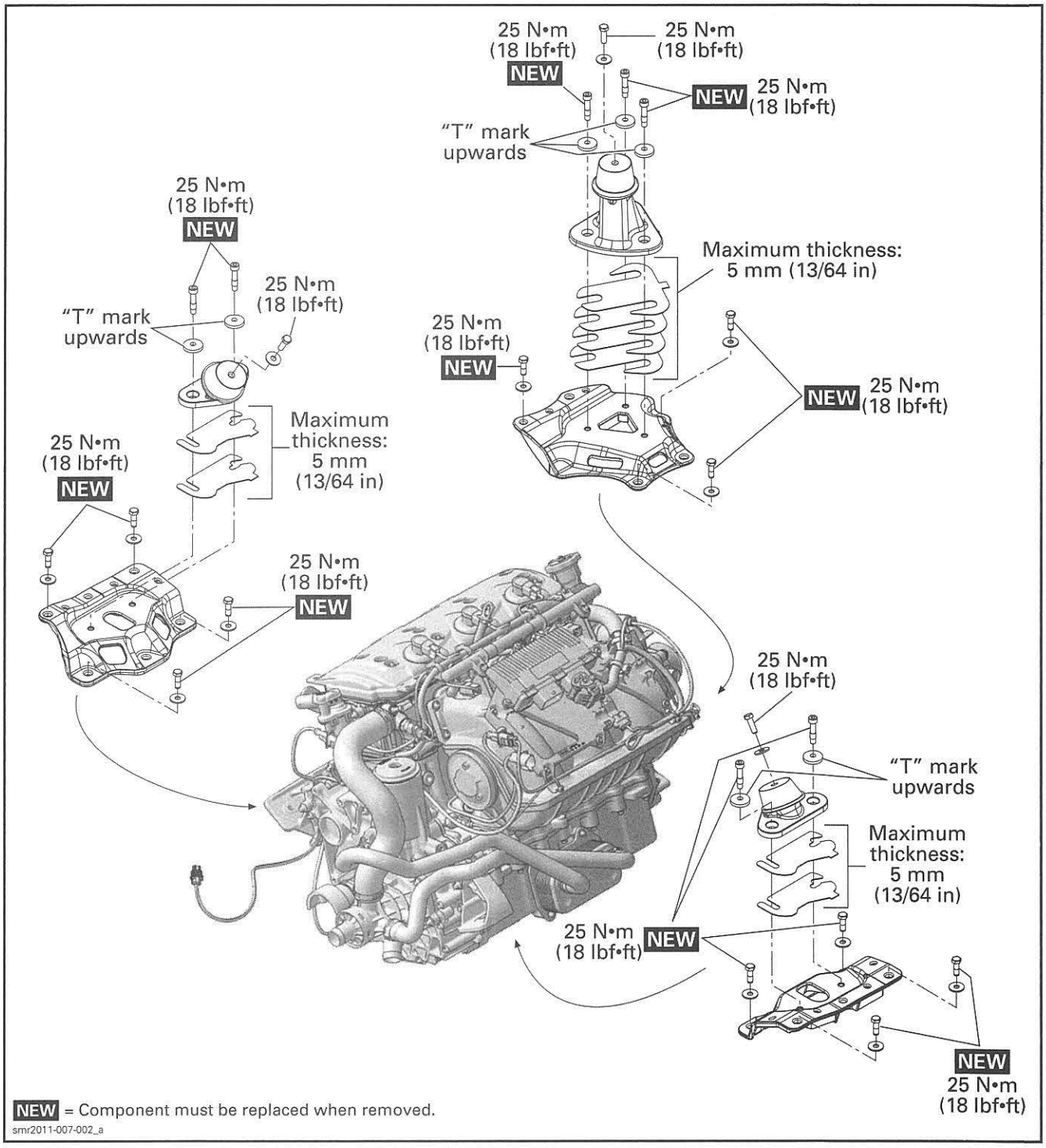

RXT 260, GTX 215/260 and WAKE PRO 215

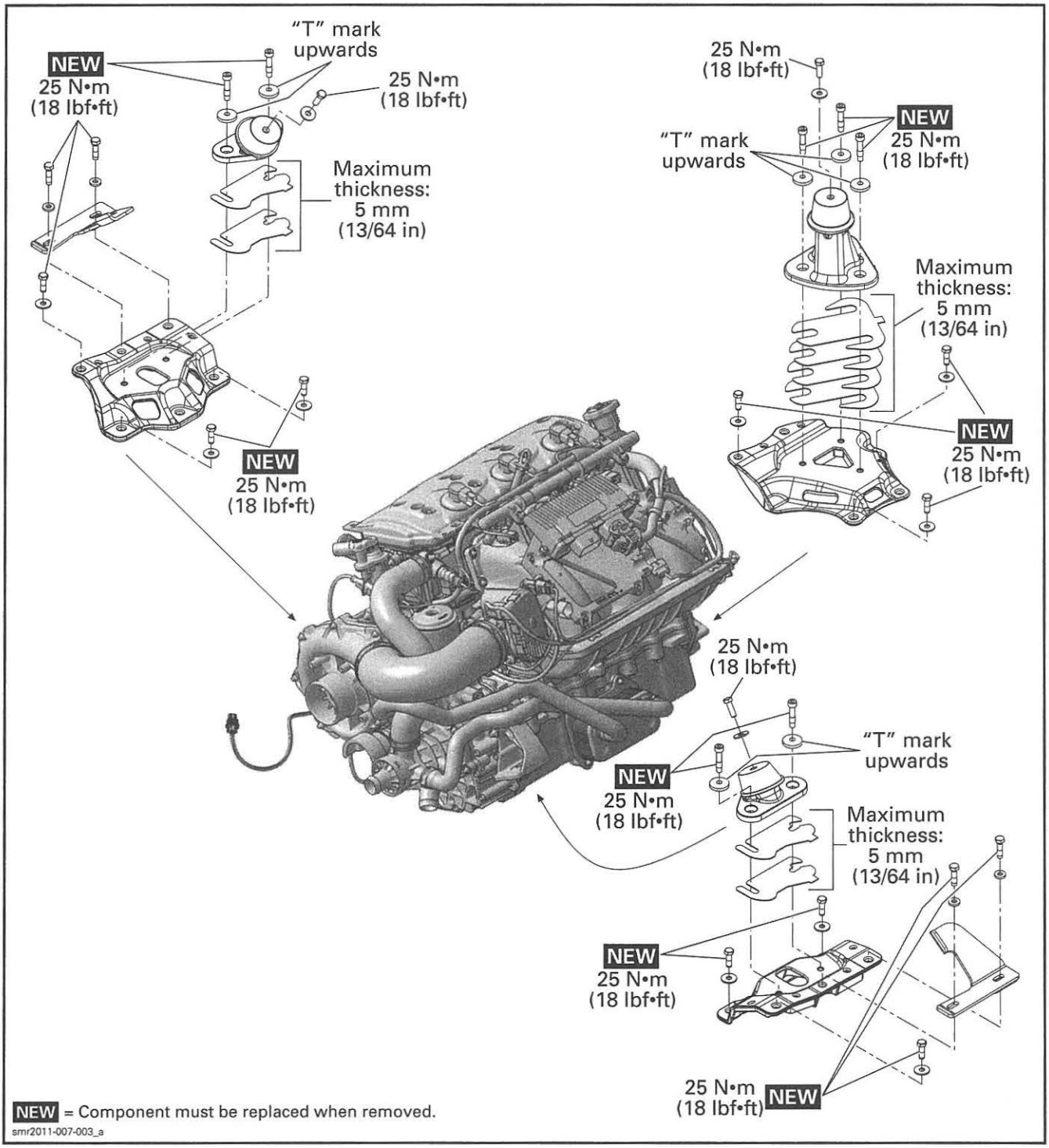

RXP-X 260

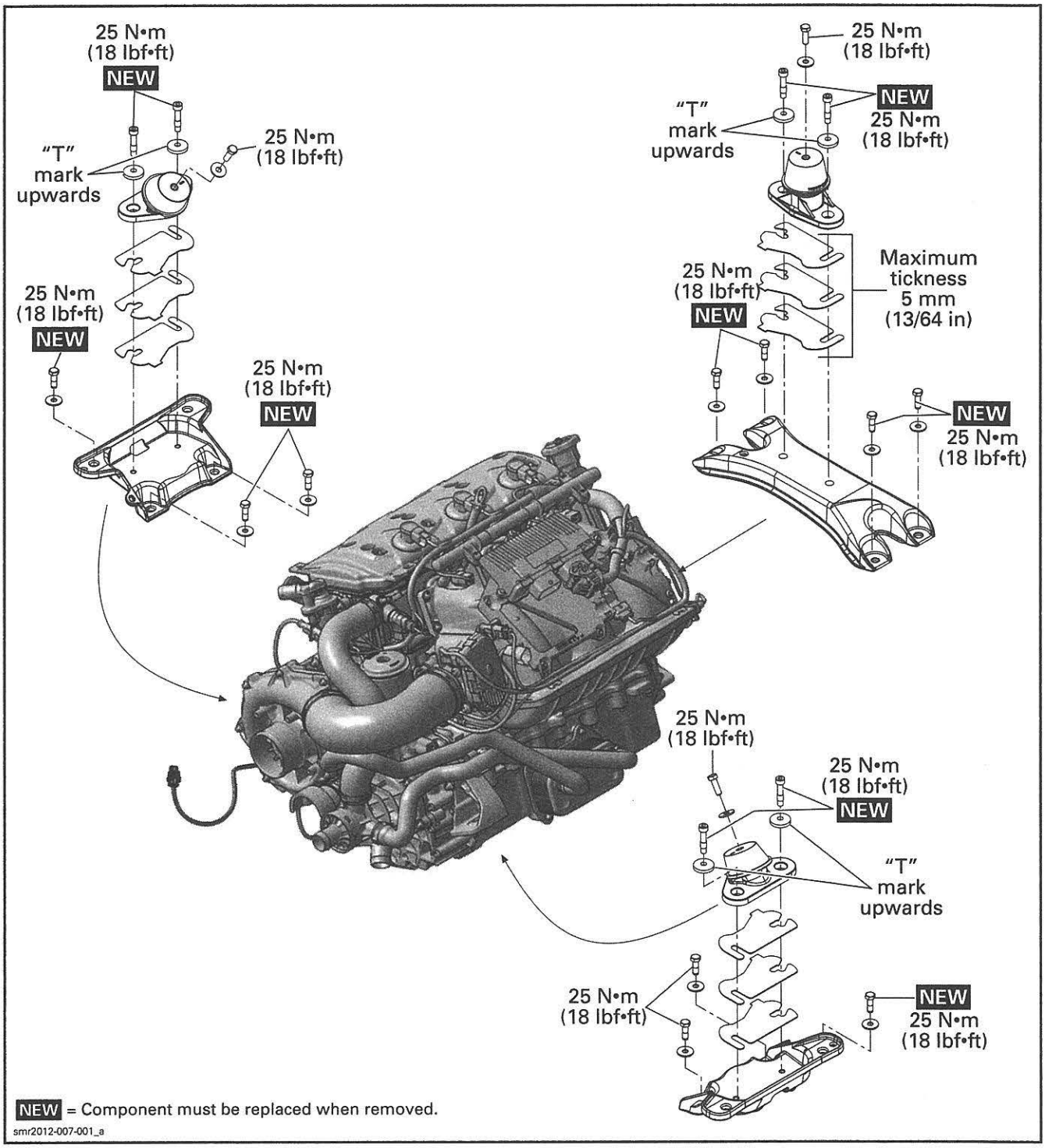
25 N•m
(18 lbf•ft)
NEW
"T"
mark
upwards
25 N•m
(18 lbf•ft)
25 N•m
(18 lbf•ft)
NEW
25 N•m
(18 lbf•ft)
NEW
25 N•m
(18 lbf•ft)
"T"
mark
upwards
NEW
25 N•m
(18 lbf•ft)
25 N•m
(18 lbf•ft)
NEW
Maximum
tickness
5 mm
(13/64 in)
NEW
25 N•m
(18 lbf•ft)
25 N•m
(18 lbf•ft)
25 N•m
(18 lbf•ft)
NEW
"T"
mark
upwards
25 N•m
(18 lbf•ft)
NEW
25 N•m
(18 lbf•ft)
NEW = Component must be replaced when removed.
smr2012-007-001_a

PROCEDURES

ENGINE

Engine Removal Guideline

PROCEDURES ACCORDING TO MODEL
MODELS WITH SUSPENSION
– Remove moving deck and deck extension. Refer to *BODY*. – Remove the air intake silencer and its support. Refer to *AIR INTAKE SILENCER (MODELS WITH SUSPENSION)* subsection).
ALL MODELS EQUIPPED WITH A 260 ENGINE
– Unplug air intake hose from the throttle body.
ALL MODELS EQUIPPED WITH A 260 ENGINE (EXCEPT MODELS WITH SUSPENSION)
– Remove the supercharger. Refer to *SUPERCHARGER* subsection.
ALL MODELS EQUIPPED WITH A 215 ENGINE
– Unplug both hoses from the supercharger.
ALL MODELS (EXCEPT MODELS WITH SUSPENSION)
– Disconnect all fuel injector connectors and the following sensors (CTS, CPS, TOPS, CAPS and OPS). – Remove the intake manifold. Refer to *INTAKE MANIFOLD* subsection.

COMMON PROCEDURE FOR ALL MODELS
– Remove the seat. Refer to appropriate *BODY* subsection. – Disconnect the battery. Refer to *CHARGING SYSTEM* subsection. – Unplug fuel hose from fuel rail. Refer to *ELECTRONIC FUEL INJECTION (EFI)* subsection. – Drain coolant. Refer to *COOLING SYSTEM* subsection. – Disconnect the "B" connector from the ECM. – Disconnect the engine connector. – Disconnect the knock sensor and magneto connectors (remove connector housings from the ECM support). – Disconnect the EGTS sensor from the muffler. – Disconnect the three ground cables on the front end of engine. – Unplug the front exhaust hose from the muffler. – Unplug the blow-by valve hose. – Unplug the ride plate hoses from water pump housing. – Move muffler backward. Refer to *EXHAUST SYSTEM* subsection. – Remove the drive shaft. Refer to *DRIVE SHAFT* subsection. – Remove the engine mounting screws. – Cut any locking ties from hoses or wiring harness that prevent engine removal. – Slightly lift the engine using a suitable lifting device. 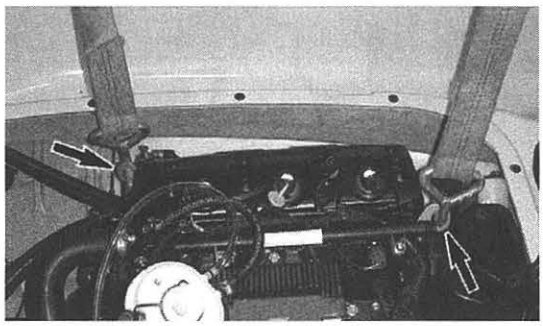 – Unplug water hoses from exhaust manifold. – Disconnect the starter cable from the starter. – Disconnect the engine ground cable located under the exhaust manifold. – Carry on engine lifting to remove it from the body opening.

NOTICE Be careful not to scratch body or to hit any engine component during engine removal.

Engine Installation

Installation of engine in watercraft is essentially the reverse of removal procedures. However pay particular attention to the following.

NOTICE Whenever engine is removed from watercraft, engine alignment must be performed at reinstallation.

Wipe off any spillage in bilge. Clean with the PULLEY FLANGE CLEANER (P/N 413 711 809).

Check tightness and condition of engine rubber mounts. Refer to *ENGINE MOUNTS* in this subsection.

Before completely lowering engine, install ground cable, starter cable and water hoses on exhaust manifold. Follow these guide lines.

- Ensure contact surface is perfectly clean then reconnect ground cable to engine.
- Apply LOCTITE 243 (BLUE) (P/N 293 800 060) on threads of ground cable screw or use a new screw with self-locking product.
- Tighten ground cable screw to 23 N•m (17 lbf•ft).
- Torque starter cable nut to 7 N•m (62 lbf•**in**).
- Install protective cap over the starter cable end.
- Connect exhaust manifold water inlet and outlet hoses. Tighten clamps to 1.7 N•m (15 lbf•**in**).

Place engine into vehicle.

Install engine support screws. Do not apply threadlocker to engine support screws and do not torque yet.

Align engine. Refer to *ENGINE ALIGNMENT* in this subsection for complete procedure.

NOTICE The engine alignment must be completed before finalizing the engine installation.

Install and properly align exhaust pipe. Refer to *EXHAUST SYSTEM* subsection.

Reinstall all other removed parts.

Check hose condition and pressure test fuel system, refer to *FUEL SYSTEM* section.

⚠ WARNING

Whenever doing any type of repair on watercraft or if any components of the fuel system are disconnected, a pressure test must be done before starting engine.

Verify all electrical connections (ground wires and battery).

Run engine and ensure there is no leakage.

NOTICE If watercraft is out of water, exhaust system must be cooled using the flush kit.

Engine Alignment

REQUIRED TOOLS	
PUMP PLATE (P/N 529 036 224)	
ALIGNMENT SHAFT SUPPORT (P/N 529 035 506)	
ALIGNMENT SHAFT ADAPTER (P/N 529 035 719)	
ALIGNMENT SHAFT (P/N 295 000 141)	

To verify alignment of engine proceed as follows:

1. Remove jet pump and drive shaft. Refer to *STEERING AND PROPULSION* section.
2. Remove drive shaft boot.
3. Assemble alignment tool.
   - 3.1 Install the alignment shaft support on pump plate.
   - 3.2 Secure using M8 x 25 x 1.25 hexagonal screws.

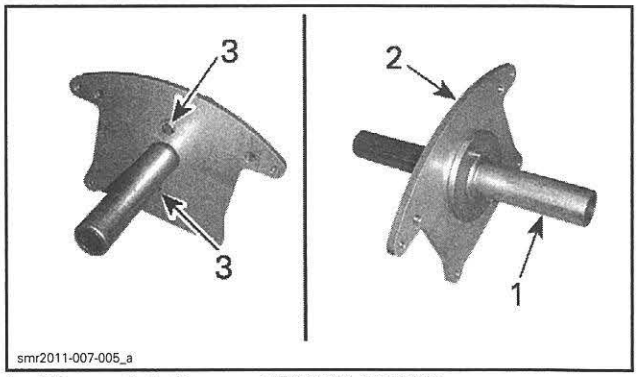

1. Alignment shaft support (P/N 529 035 506)
2. Support plate (P/N 529 036 224)
3. M8 x 25 x 1.25 hexagonal screws

TORQUE	
Alignment tool screws	24 N•m (18 lbf•ft)

4. Install the alignment tool as follows.
   - 4.1 Position the alignment tool against the pump support.
   - 4.2 Push the alignment tool upward and hold it in this position.

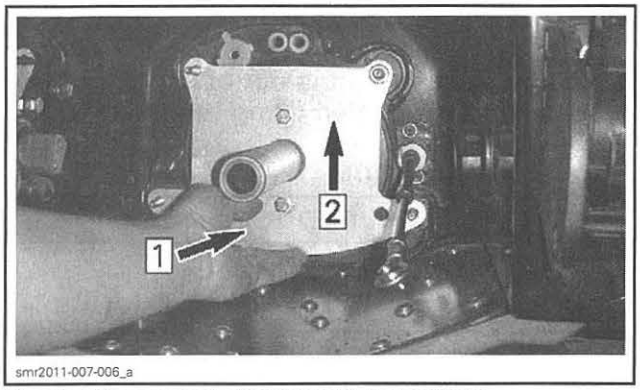

Step 1: Place alignment tool against pump support
Step 2: Push alignment tool upward

TORQUE	
Alignment tool nuts	24 N•m (18 lbf•ft)

Install the ALIGNMENT SHAFT ADAPTER (P/N 529 035 719) on the end of the ALIGNMENT SHAFT (P/N 295 000 141).

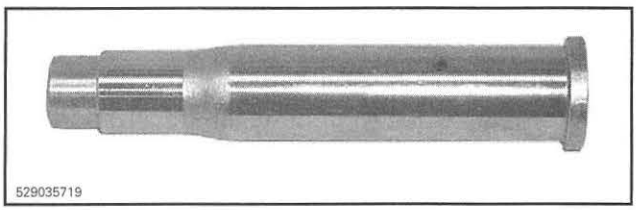

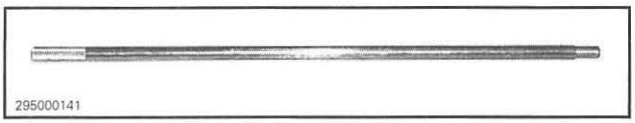

Trace two thin lines on alignment shaft.

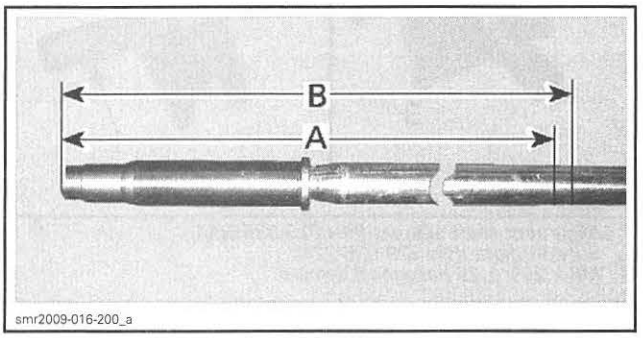

LINES	DISTANCE
Line A	at 739.5 mm (29.114 in)
Line B	at 742.5 mm (29.232 in)

5. Remove the ALIGNMENT SHAFT ADAPTER (P/N 529 035 719) from the end of the alignment shaft and install it in engine PTO housing.

NOTICE **Ensure alignment shaft adapter is fully inserted into the engine PTO housing.**

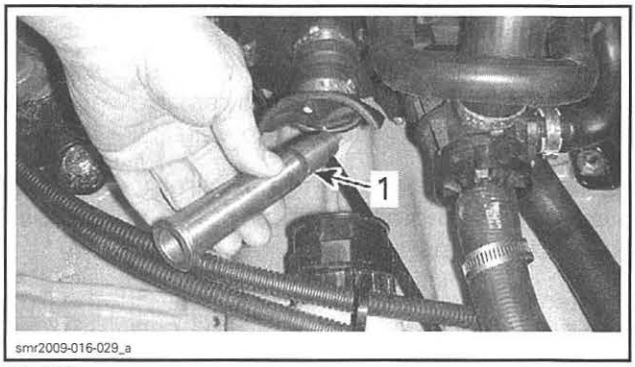

TYPICAL
1. Alignment shaft adapter

6. Carefully slide the ALIGNMENT SHAFT (P/N 295 000 141) through the engine alignment tool.

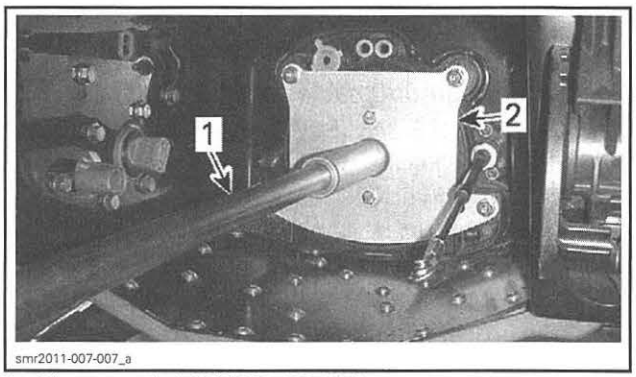

1. Alignment shaft (P/N 295 000 141)
2. Alignment tool

7. Insert alignment shaft end into alignment shaft adapter. If the alignment is correct, the alignment shaft end should slide through the adapter.

NOTE: A small resistance during shaft insertion is normal.

8. If the alignment is incorrect, loosen engine mount retaining screws (Allen socket screws).
9. Add or remove shims as required.

NOTE: Shims location is between engine mount and engine mount plate.

NOTICE **Whenever shims are used to correct alignment, never install more than 5 mm (13/64 in) of shims.**

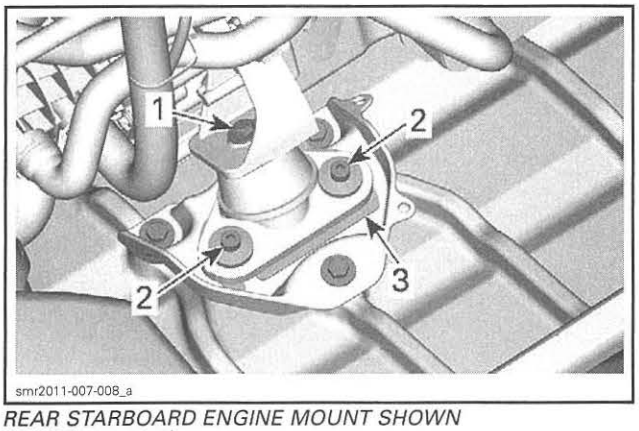

REAR STARBOARD ENGINE MOUNT SHOWN
1. *Engine mounting screw*
2. *Engine mount retaining screws*
3. *Shim(s)*

10. When engine alignment is correct, check the longitudinal position of engine.

Engine Longitudinal Position Verification

With alignment shaft installed, check the location of the marks (previously drawn at the beginning of the engine alignment procedure).

Engine is properly positioned longitudinally when the engine alignment tool is between both shaft marks.

- If **one** mark is visible, the engine is properly positioned.
- If **both** marks are visible, the engine must be moved forward.
- If **no** mark is visible, the engine must be moved rearward.

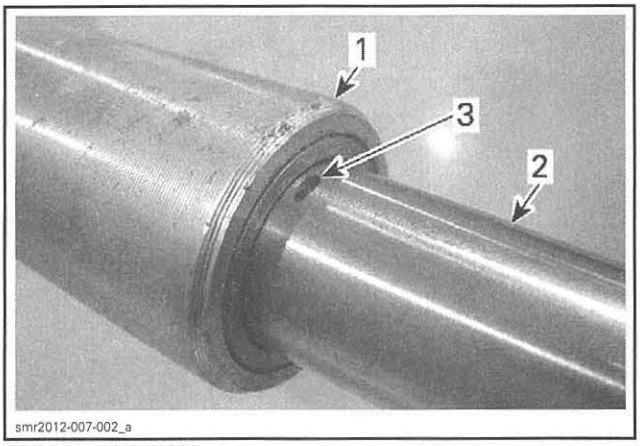

PROPER POSITION
1. *Engine alignment tool*
2. *Alignment shaft*
3. *Mark at 742.5 mm (29.232 in)*

When alignment and longitudinal position of engine are correct, tighten engine mount screws. Refer to *ENGINE MOUNTS* in this subsection.

Recheck engine alignment.

ENGINE MOUNTS

If engine mounts have been removed, apply LOCTITE 243 (BLUE) (P/N 293 800 060) on screw threads or use new screws with self-locking product.

Torque all engine mount screws to 25 N•m (18 lbf•ft).

NOTE: Position conical spring washer with the "T" mark upwards.

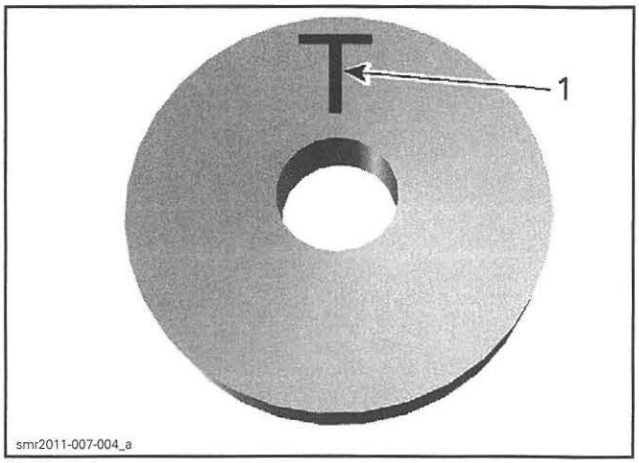

1. *T mark*

AIR INTAKE SYSTEM (MODELS WITHOUT SUSPENSION)

130 and 155 engines (including GTS RENTAL)

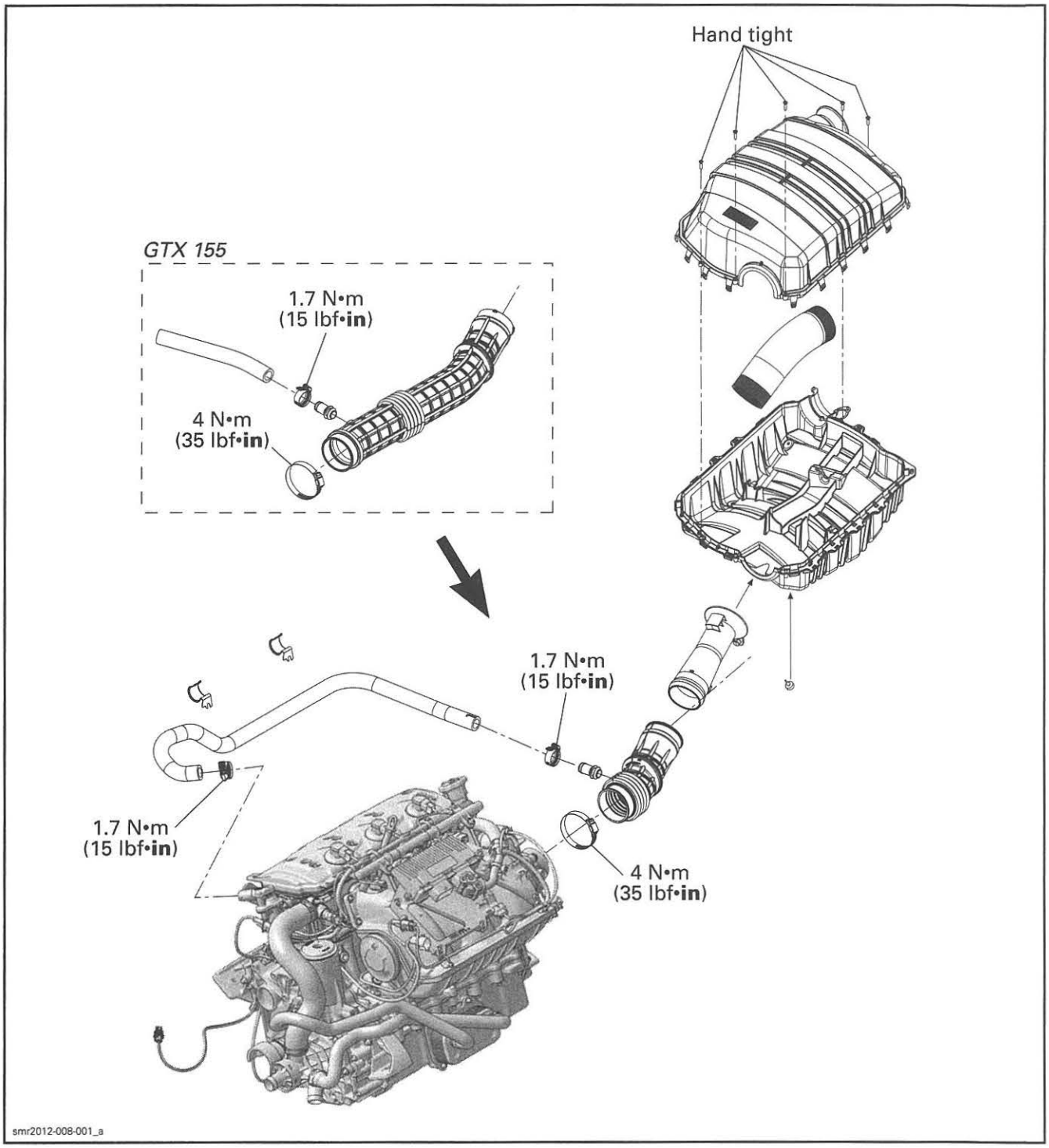

215 and 260 Engines

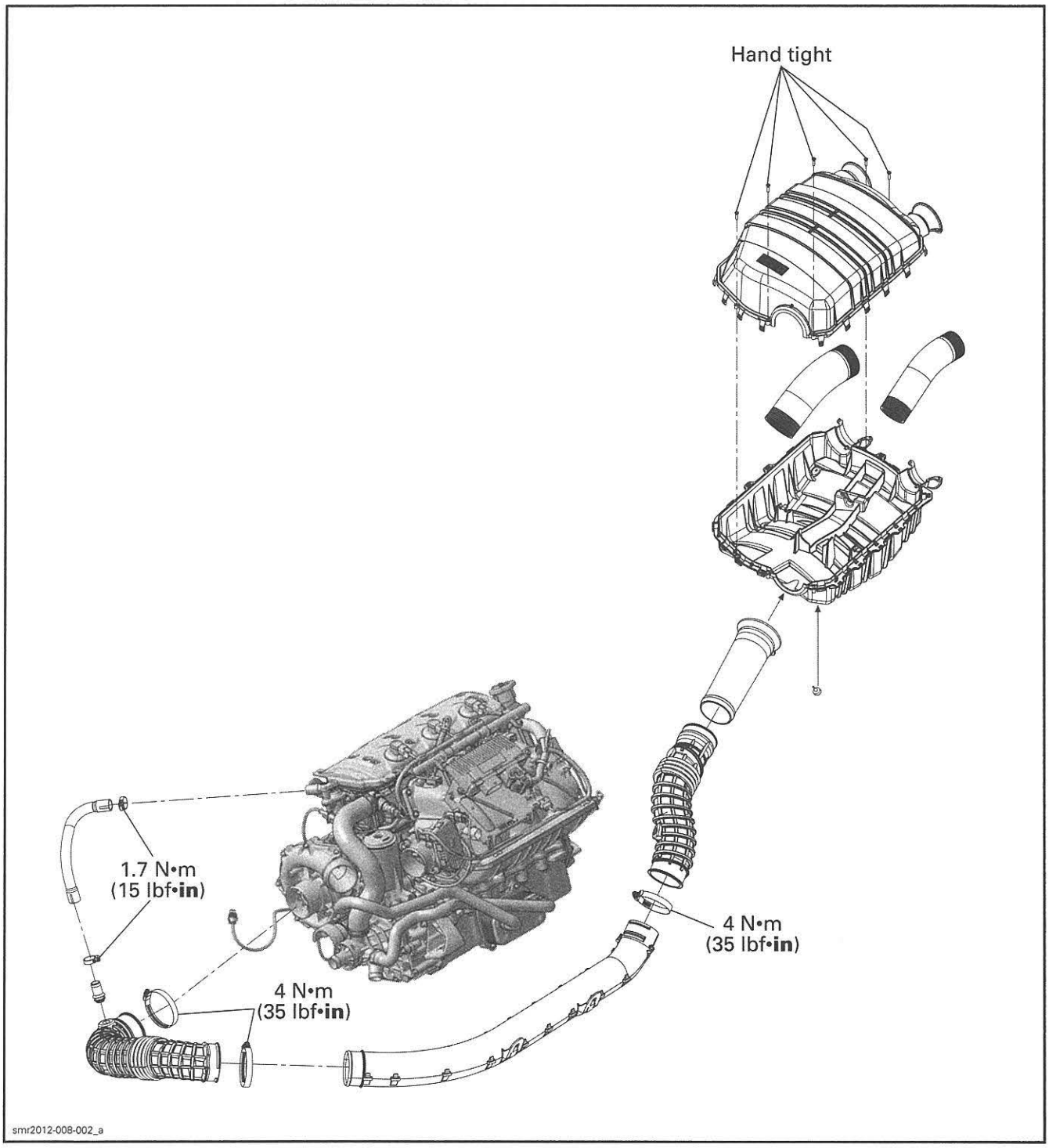

PROCEDURES

AIR INTAKE SILENCER

Air Intake Silencer Access

GTS, GTI, GTR, RXP and WAKE 155 Models

1. Open the front storage compartment cover.
2. Remove partitions. Refer to *BODY* subsection.

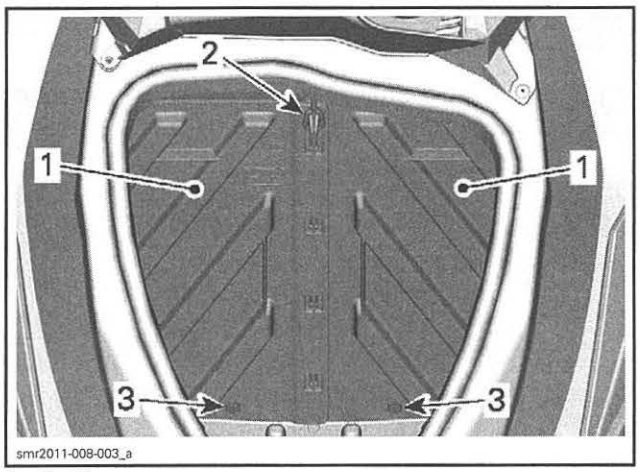

1. Partitions
2. Retaining strap
3. Plastic rivets

3. Disconnect gauge and OTAS connectors.

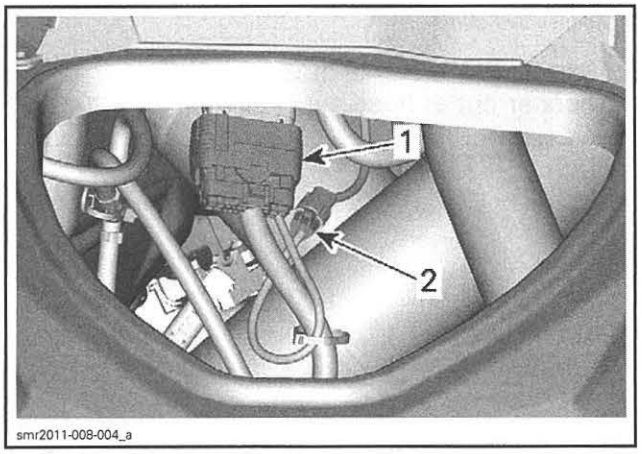

1. Gauge connector
2. OTAS connector

4. Remove plastic darts securing the top of the ventilation tubes.
5. Unplug ventilations tubes and place them lower in hull.

RXT, GTX and WAKE PRO Models

1. Open the front storage compartment cover.
2. Remove the storage bin.
3. Unplug the top of ventilations tubes and place them lower in hull.

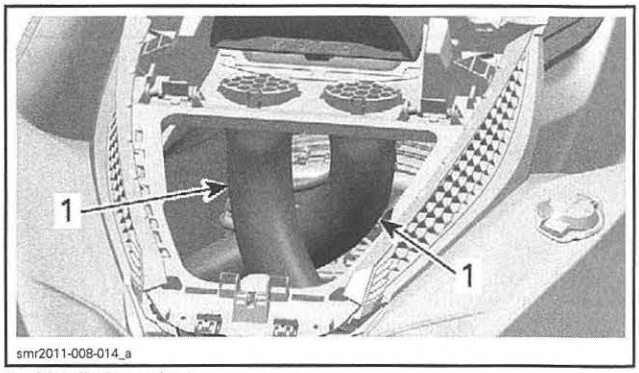

1. Ventilation tubes

4. Cut locking ties securing wiring harness and fuel hoses to air intake silencer.

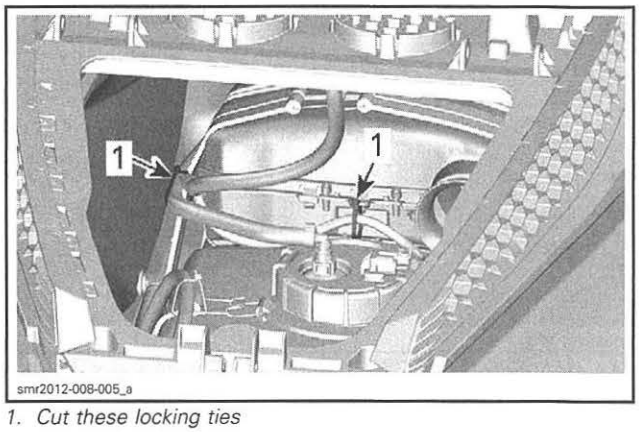

1. Cut these locking ties

5. Cut locking ties securing fuel hoses and wiring harness to upper bracket.
6. Disconnect gauge and OTAS connectors.

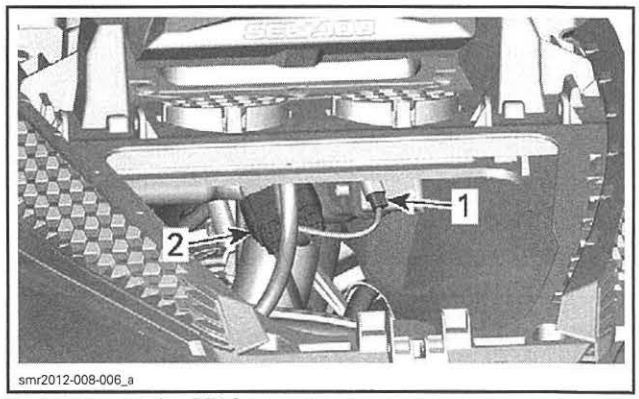

1. Disconnect the OTAS connector
2. Disconnect the gauge connector

Air Intake Silencer Removal

1. Open or remove the seat.

2. From seat opening, cut locking tie securing the wiring harness and the fuel supply hose to air intake silencer.

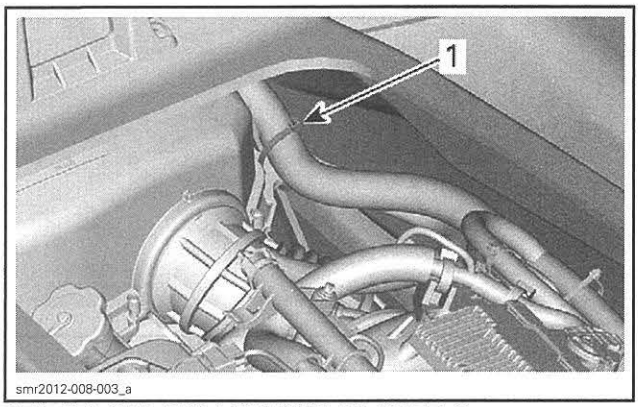

GTS, GTI, GTR, RXP AND WAKE 155 MODELS
1. *Cut this locking tie*

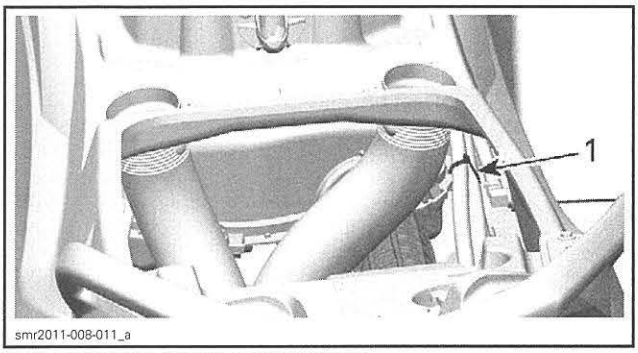

RXT, GTX AND WAKE PRO MODELS
1. *Cut this locking tie*

3. Detach rear retaining strap retaining air intake silencer and fuel tank.

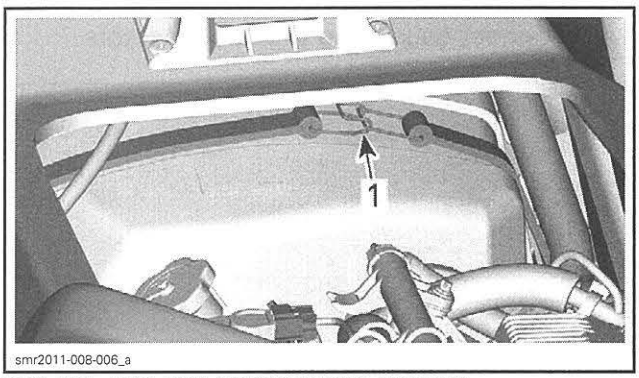

GTS, GTI, GTR, RXP AND WAKE 155 MODELS
1. *Rear retaining strap*

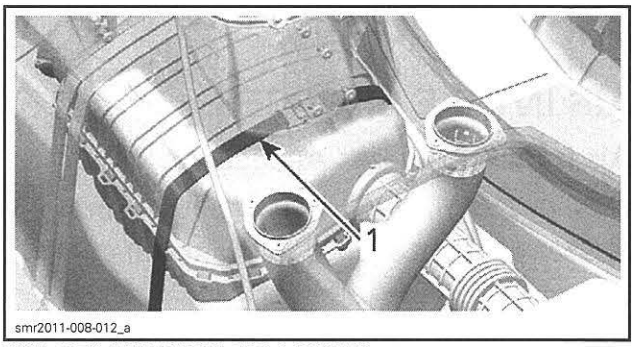

RXT, GTX AND WAKE PRO MODELS
1. *Rear retaining strap – under glove box*

4. Loosen clamp securing the air intake silencer outlet hose to throttle body.

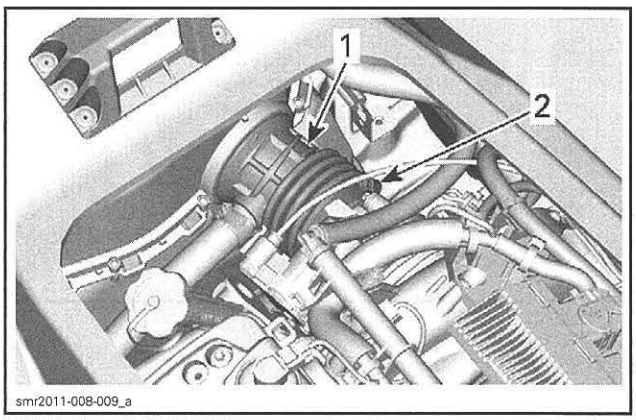

TYPICAL – GTI SHOWN
1. *Air intake silencer outlet hose*
2. *Loosen this clamp*

5. Detach the breather hose from the air intake silencer outlet hose.

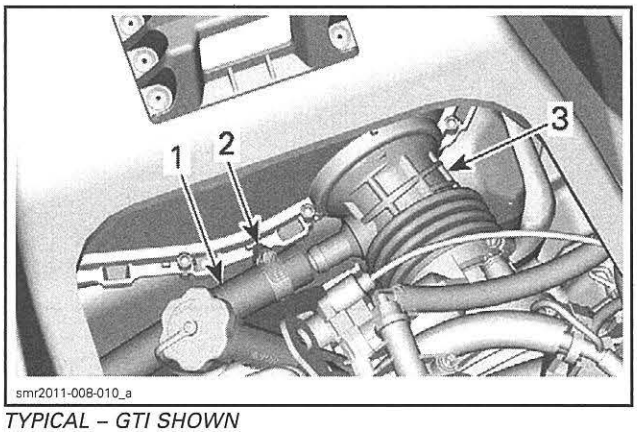

TYPICAL – GTI SHOWN
1. *Breather hose*
2. *Breather hose clamp*
3. *Air intake silencer outlet hose*

6. From the front storage compartment, cut locking tie securing the wiring harness and the fuel hose to air intake silencer.

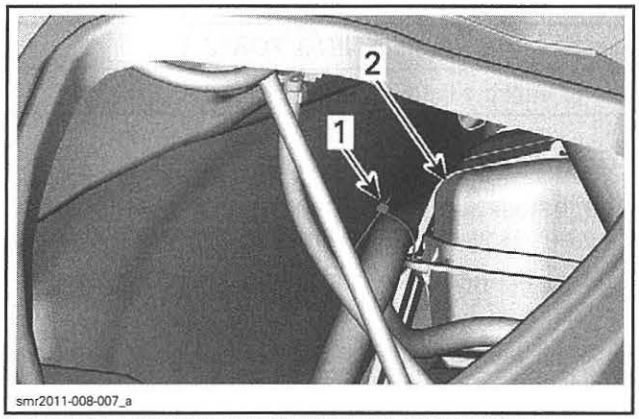

THROUGH FRONT STORAGE COMPARTMENT OPENING
1. *Cut this locking tie*
2. *Front of air intake silencer*

7. Detach the front retaining straps.

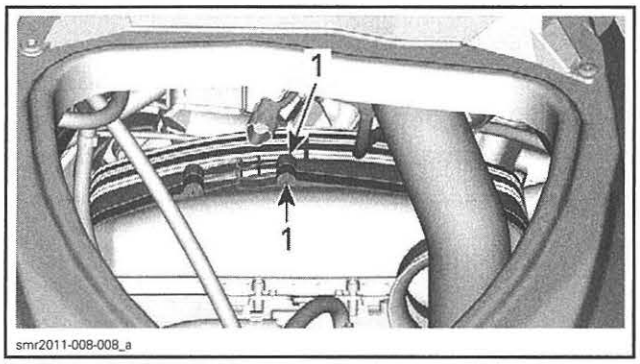

1. *Front retaining straps*

8. Carefully pull the air intake silencer forward to remove it from the vehicle.

Air Intake Silencer Disassembly

1. Remove screws retaining both parts of air intake silencer together.

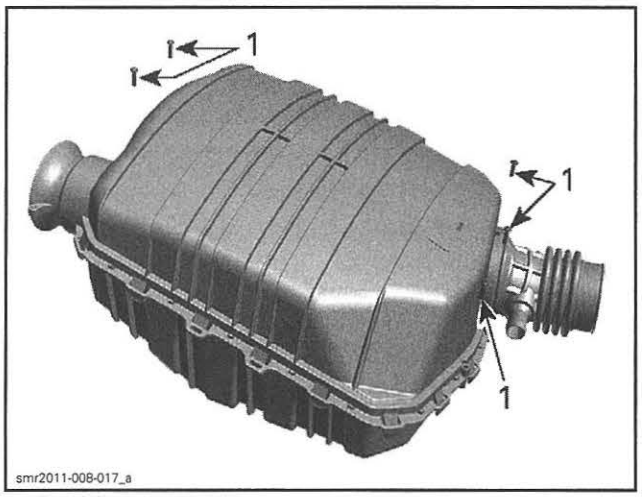

1. *Retaining screws (5x)*

2. Unlatch air intake silencer and remove the upper section.

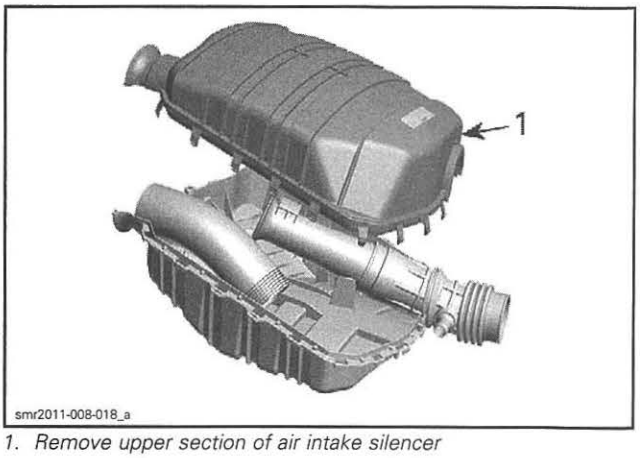

1. *Remove upper section of air intake silencer*

3. Remove the inlet tube (2 inlet tubes on 215 and 260 engines), the baffle and the outlet hose from the air intake silencer.

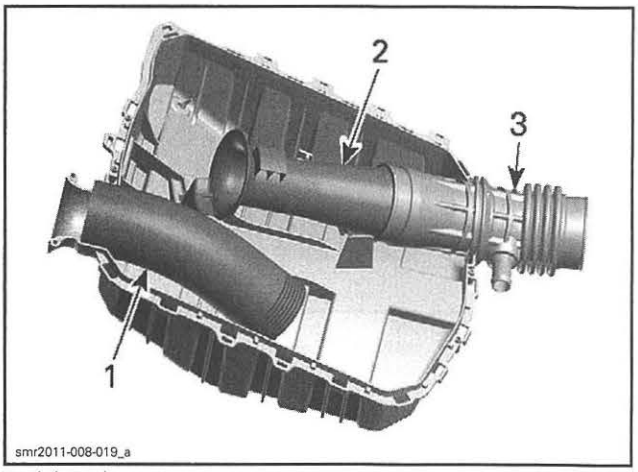

1. *Inlet tube*
2. *Baffle*
3. *Outlet hose*

Air Intake Silencer Assembly

Install the baffle into the outlet hose. Ensure marks are aligned.

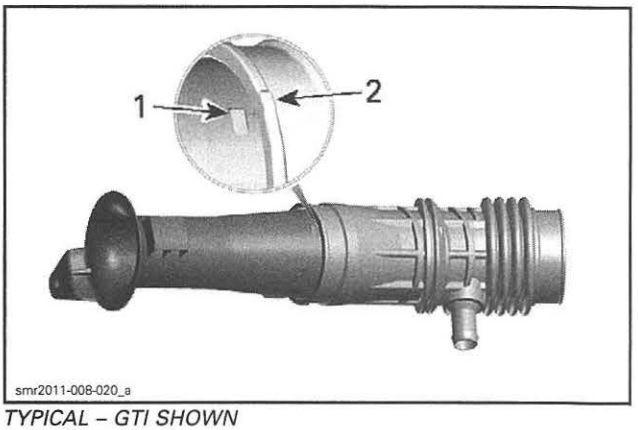

TYPICAL – GTI SHOWN
1. *Baffle mark*
2. *Outlet hose mark*

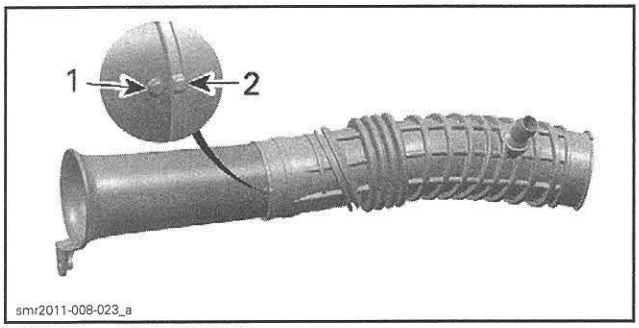

TYPICAL – GTX SHOWN
1. *Baffle mark*
2. *Outlet hose mark*

Install the assembly in the air intake silencer.

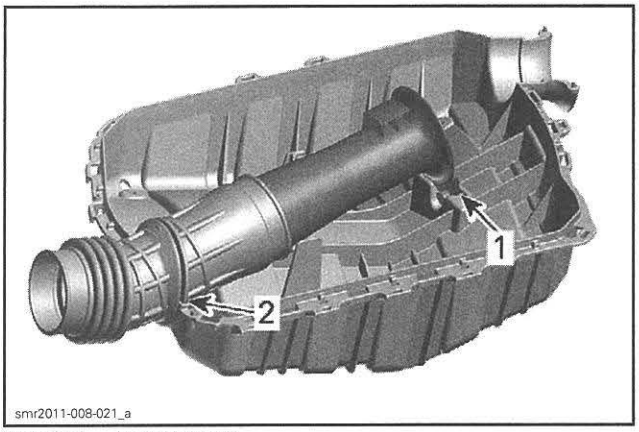

TYPICAL – GTI SHOWN
1. *Baffle tab into air intake silencer slot*
2. *Air intake silencer rib into the outlet hose groove*

Install the inlet tube. Ensure each end is properly attach.

NOTE: On **215 and 260 engines**, both inlet tubes are attached as shown.

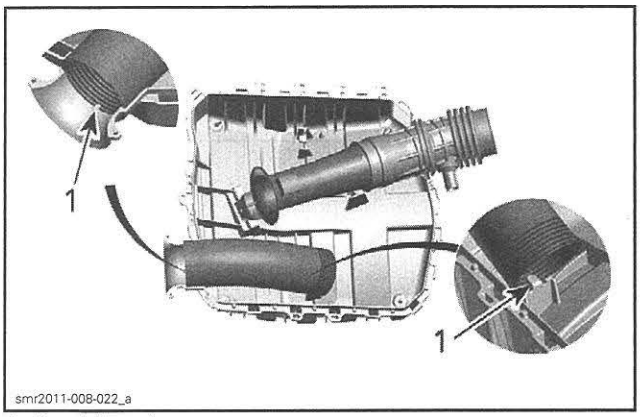

1. *Retaining tabs*

Press both halves of the air intake silencer together until all tabs are locked. Do not force, make sure all tubes are properly installed.

TIGHTENING TORQUE	
Air intake silencer screws	Hand tight

Air Intake Silencer Installation

The installation is the reverse of the removal procedure. However, pay attention to the following.

Ensure wiring harness and fuel hoses are properly route.

Tighten all gear clamp as specified in exploded views.

AIR INTAKE TUBE

Air Intake Tube Removal

215 and 260 Engines

1. Open seat.
2. Detach the seat bridge from the body and move it aside to make room.
3. Loosen clamps retaining the air intake tube.

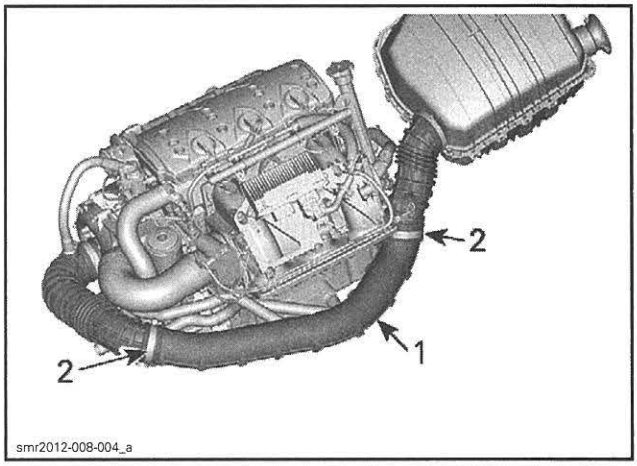

1. *Air intake tube*
2. *Retaining clamps*

4. Detach the air intake tube from both hoses.
5. Open the front compartment storage cover and remove the storage bin.
6. Slide the air intake tube over the air intake silencer and through the front compartment opening.

Air Intake Tube Installation

The installation is the reverse of the removal procedure. However pay attention to the following.

Make sure hoses are perfectly inserted into air intake tube before tightening the clamps.

TIGHTENING TORQUE	
Retaining clamps	4 N•m (35 lbf•**in**)

AIR INTAKE SYSTEM (MODELS WITH SUSPENSION)

155 Engine

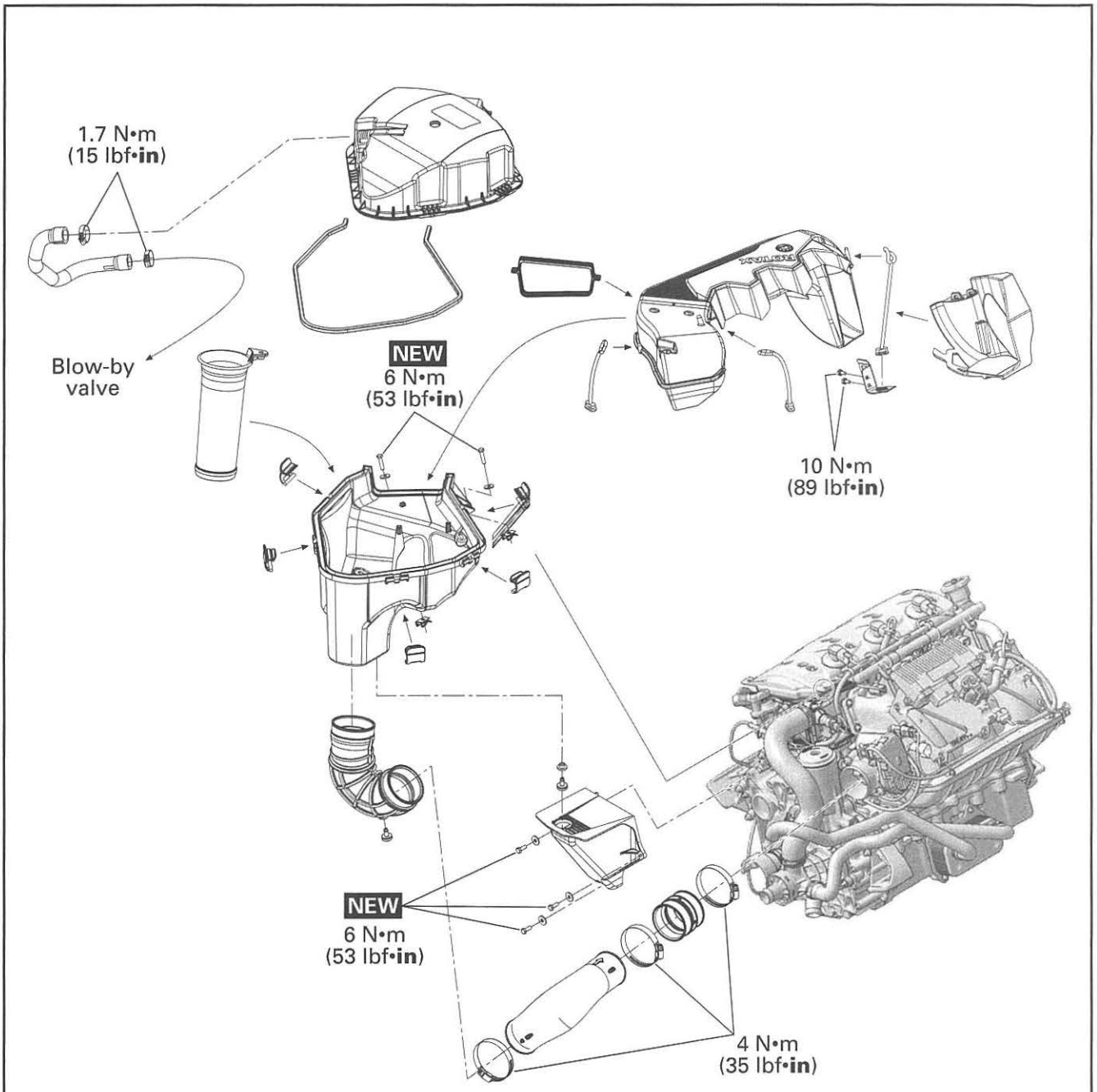

NEW = Component must be replaced when removed.

smr2012-009-001_a

260 Engine

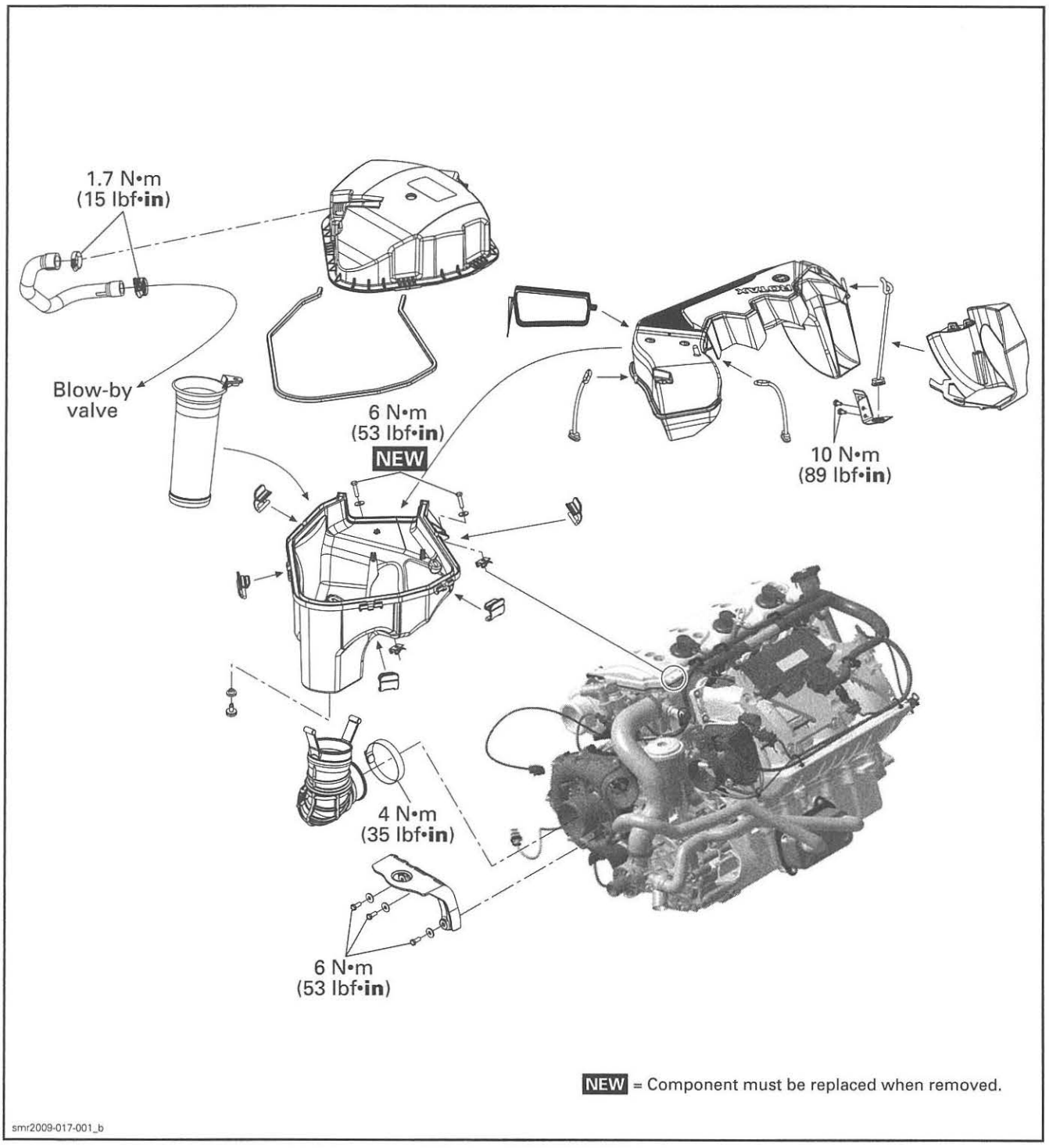
1.7 N•m
(15 lbf•in)
Blow-by
valve
6 N•m
(53 lbf•in)
NEW
10 N•m
(89 lbf•in)
4 N•m
(35 lbf•in)
6 N•m
(53 lbf•in)
NEW = Component must be replaced when removed.
smr2009-017-001_b

PROCEDURES

AIR INTAKE SILENCER COVER

Air Intake Silencer Cover Removal

Remove the deck extension. Refer to *BODY* subsection for procedure.

Release retaining latches.

Loosen clamp securing blow-by hose to cover.

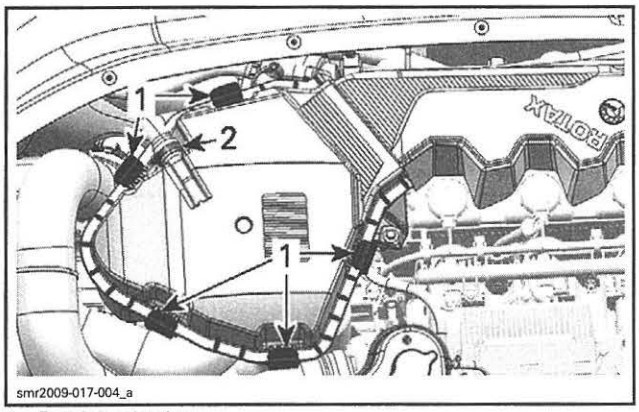

1. Retaining latches
2. Loosen this clamp

Remove the cover.

Air Intake Silencer Cover Installation

The installation is the reverse of the removal procedure. However, pay attention to the following.

Check the condition of the seal cover. Replace seal as required.

Tighten blow-by hose clamp.

TIGHTENING TORQUE	
Blow-by hose clamp	1.7 N•m (15 lbf•**in**)

Refer to *BODY* subsection for the proper installation procedure.

AIR INTAKE SILENCER BAFFLE

Air Intake Silencer Baffle Removal

Remove *AIR INTAKE SILENCER COVER*, see procedure in this subsection.

Pull the baffle out of the air intake silencer.

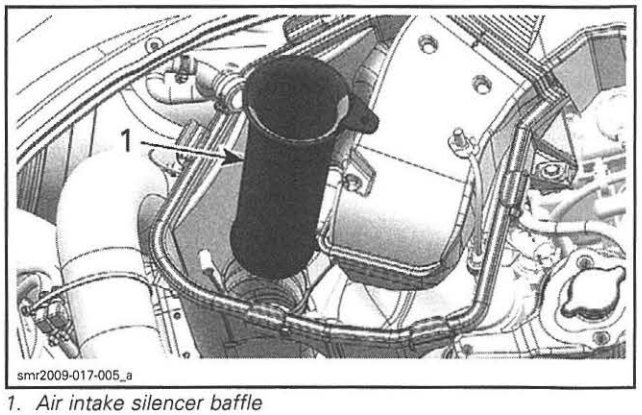

1. Air intake silencer baffle

Air Intake Silencer Baffle Installation

Insert the end of the baffle into supercharger air inlet hose. Using hose ears to retain hose, push the baffle into supercharger air inlet hose.

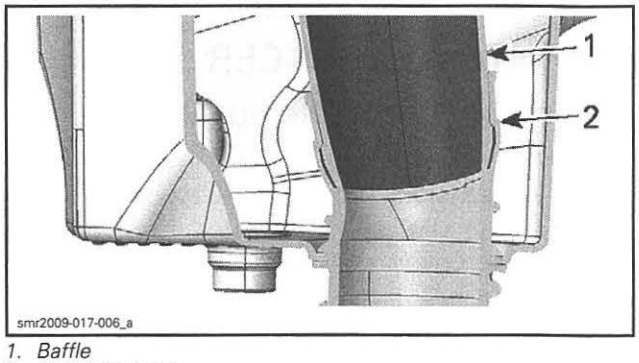

1. Baffle
2. Air intake hose

Install air intake silencer cover and all other removed parts.

AIR INTAKE TUBE

Air Intake Tube Removal

Remove the *AIR INTAKE SILENCER COVER* and the *AIR INTAKE SILENCER BAFFLE*, see procedure in this subsection.

Release the three rubber latches securing the air intake tube.

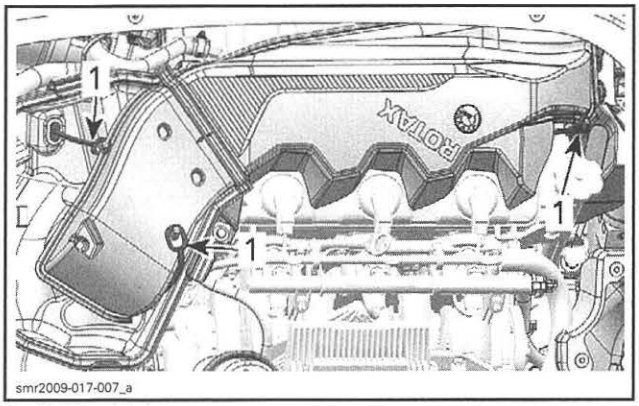

1. Rubber latches

Remove air intake tube from vehicle.

Air Intake Tube Installation

The installation is the reverse of the removal procedure.

AIR INTAKE SILENCER

Air Intake Silencer Removal

Remove:

- Deck extension, see *BODY* subsection for procedure
- Air intake cover
- Air intake tube.

Remove and discard both screws securing air intake silencer.

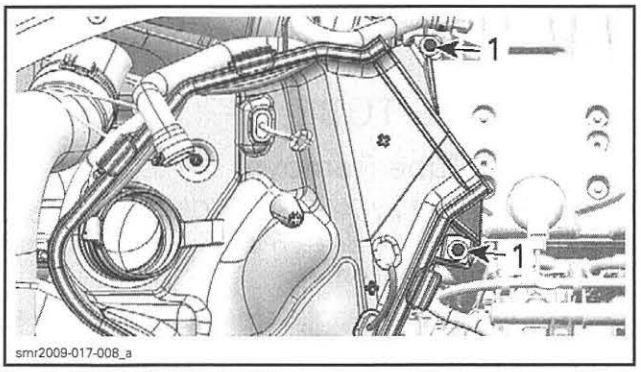

1. Air intake silencer screws

Inside air intake silencer, squeeze the top of its outlet hose and move hose out of air intake silencer.

Air Intake Silencer Installation

Squeeze the top of the air intake silencer outlet hose and move it in the air intake silencer.

Install the air intake silencer into hose groove.

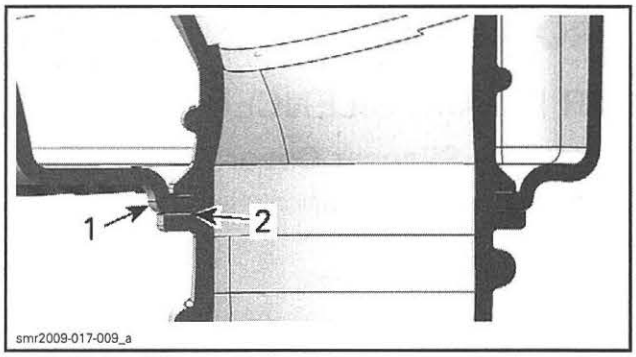

1. Air intake silencer
2. Outlet hose groove

Secure air intake silencer using NEW screws.

TIGHTENING TORQUE	
Air intake silencer screw	6 N•m (53 lbf•**in**)

Install all other removed parts.

INTAKE MANIFOLD

SERVICE PRODUCTS

Description	Part Number	Page
LOCTITE 243 (BLUE)	293 800 060	49

130 and 155 Engines (Models Without Suspension)

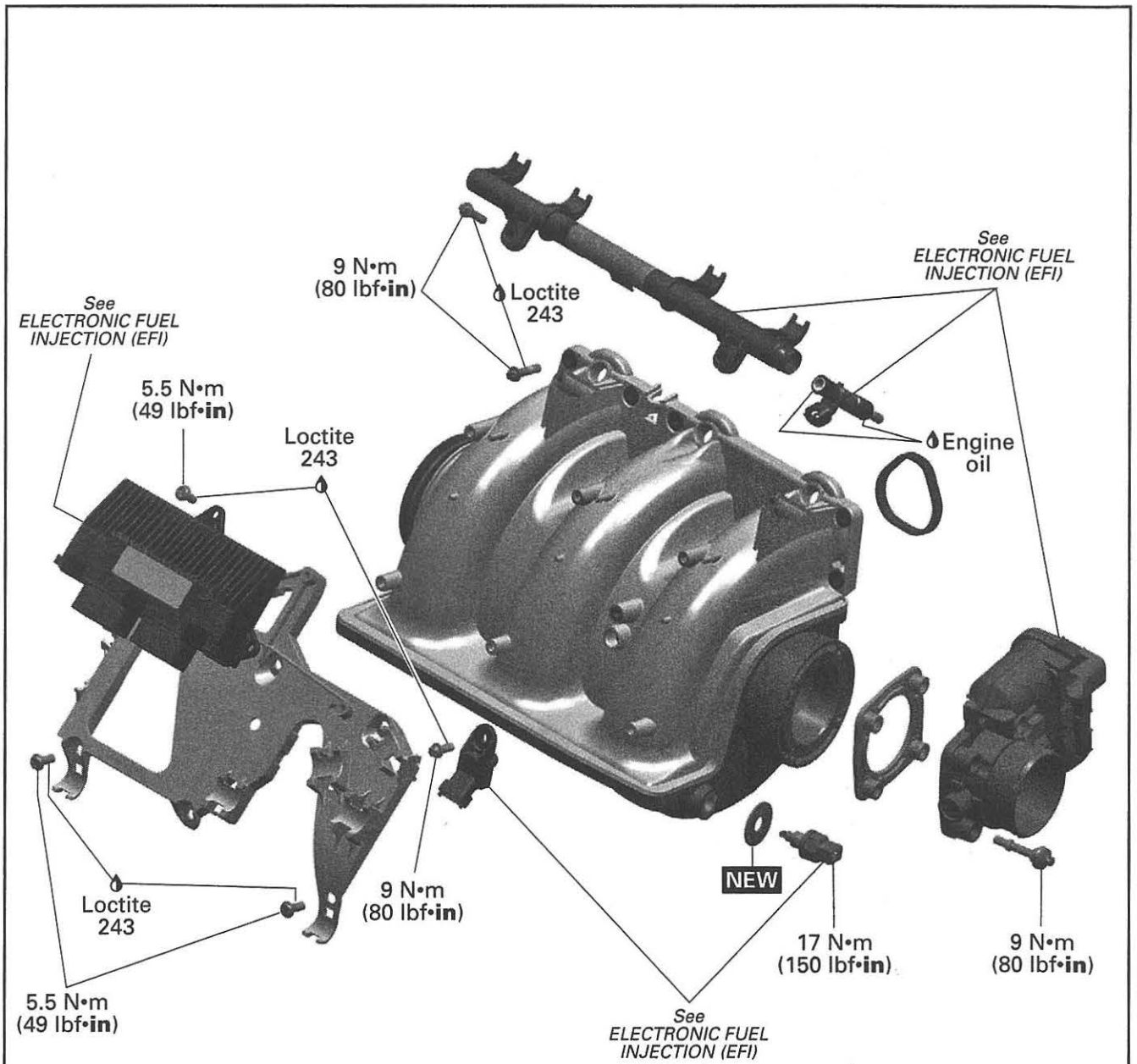

NEW = Component must be replaced when removed.

smr2011-010-001_a

215 Engine

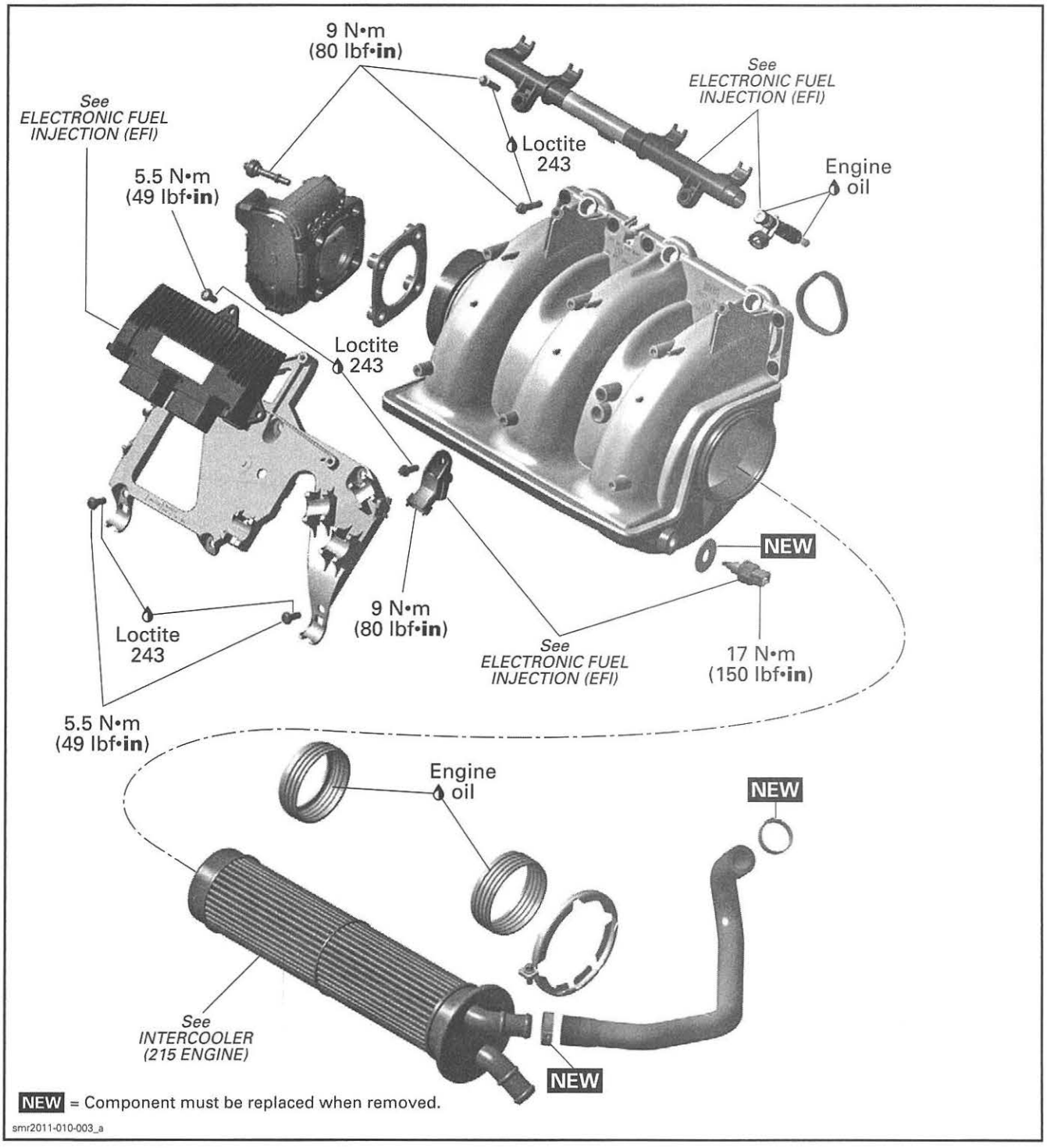
9 N•m
(80 lbf•in)
See
ELECTRONIC FUEL
INJECTION (EFI)
Loctite
243
See
ELECTRONIC FUEL
INJECTION (EFI)
Engine
oil
5.5 N•m
(49 lbf•in)
Loctite
243
NEW
Loctite
243
9 N•m
(80 lbf•in)
See
ELECTRONIC FUEL
INJECTION (EFI)
17 N•m
(150 lbf•in)
5.5 N•m
(49 lbf•in)
Engine
oil
NEW
See
INTERCOOLER
(215 ENGINE)
NEW
NEW = Component must be replaced when removed.
smr2011-010-003_a

155 Engine (Models with Suspension) and 260 Engines

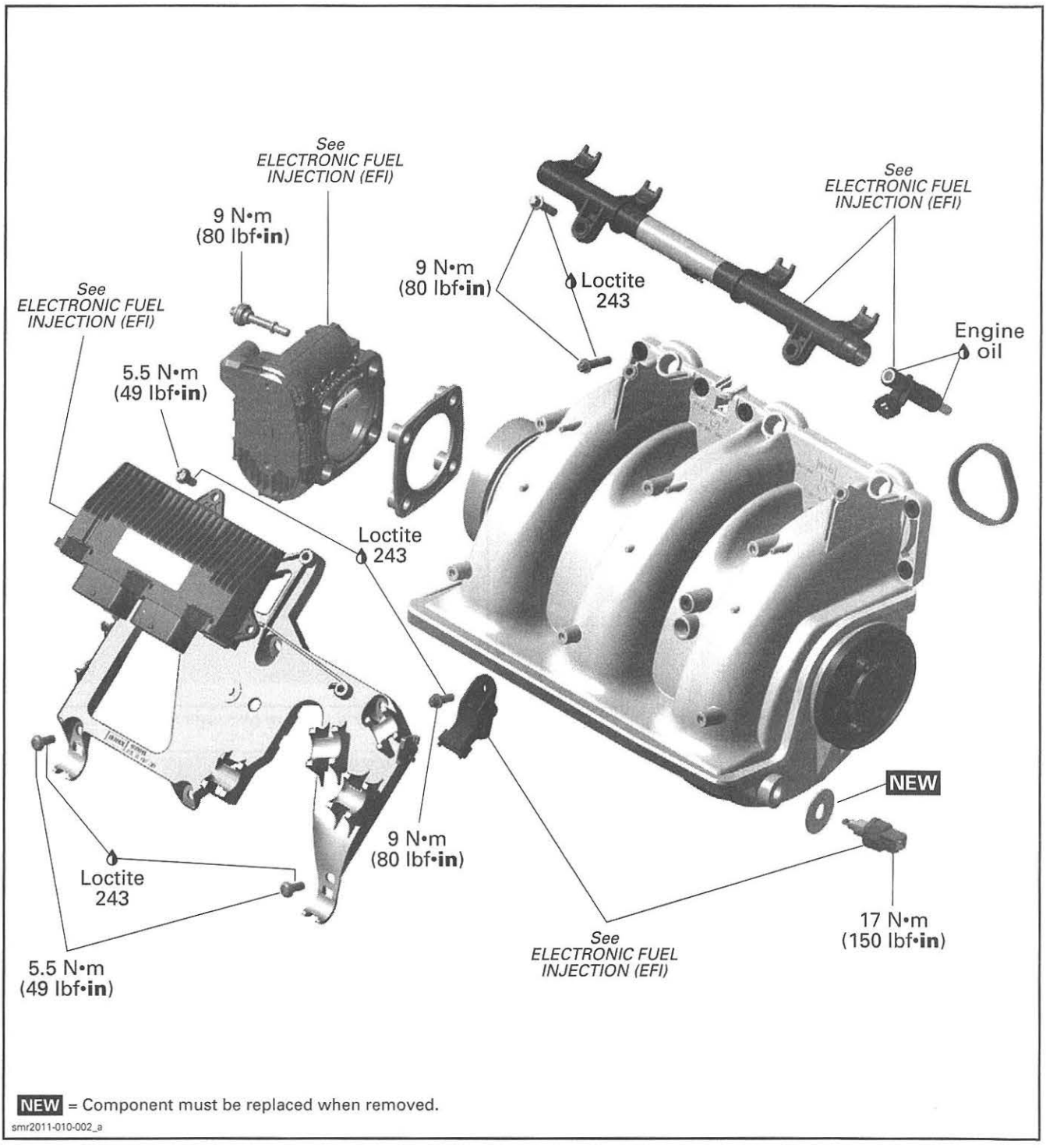

NEW = Component must be replaced when removed.

smr2011-010-002_a

PROCEDURES

INTAKE MANIFOLD

Intake Manifold Removal

Models with Suspension

Remove the air intake silencer. Refer to *AIR INTAKE SYSTEM (MODELS WITH SUSPENSION)* subsection.

All Models

Disconnect the intake hose at intake manifold.

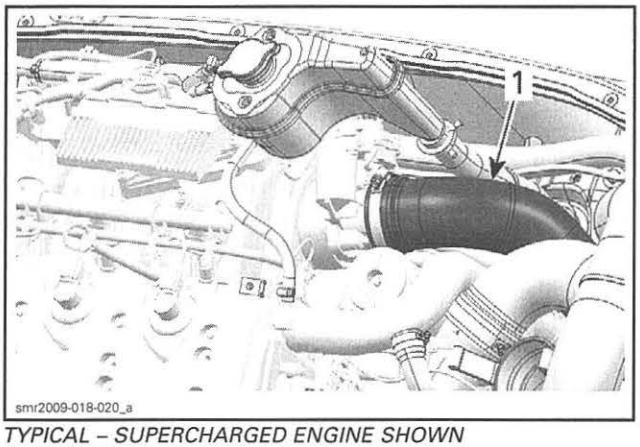

TYPICAL – SUPERCHARGED ENGINE SHOWN
1. Intake hose

Move the coolant expansion tank aside to make room.

Remove the oil dipstick.

On some models, remove the engine cover. Press tabs on both sides to remove the cover.

Disconnect fuel hose connector at fuel rail. Refer to *ELECTRONIC FUEL INJECTION (EFI)* subsection.

Unplug the "B" connector from the ECM by pulling the lock. Refer to *CONNECTOR INFORMATION* subsection for procedure.

Cut all locking ties securing the wiring harnesses to the intake manifold.

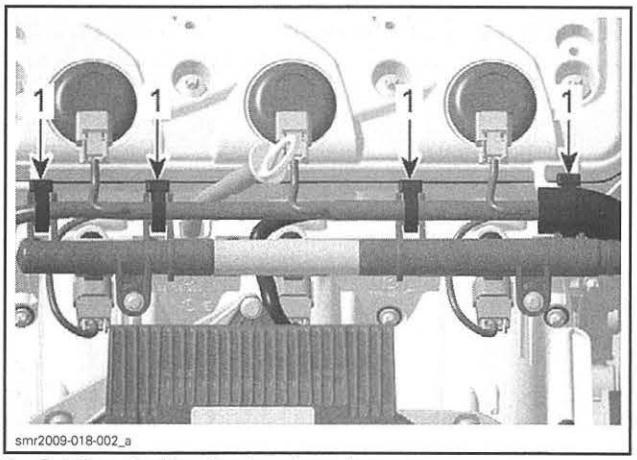

1. Cut these locking ties to release harness

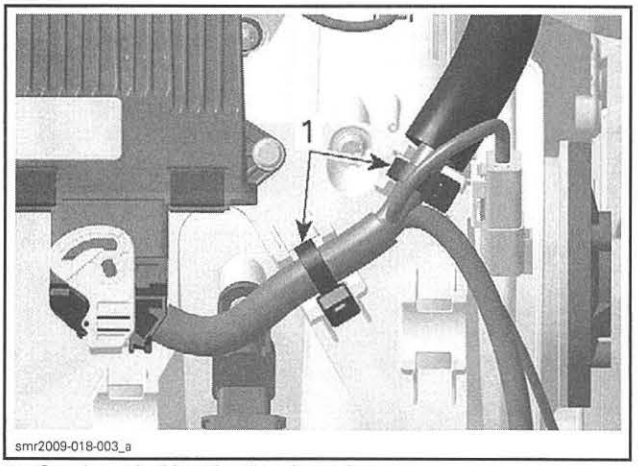

1. Cut these locking ties to release harness

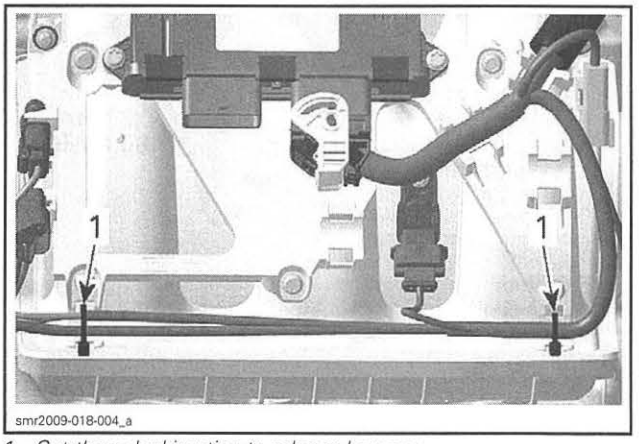

1. Cut these locking ties to release harness

Unplug the ignition coil and fuel injector connectors.

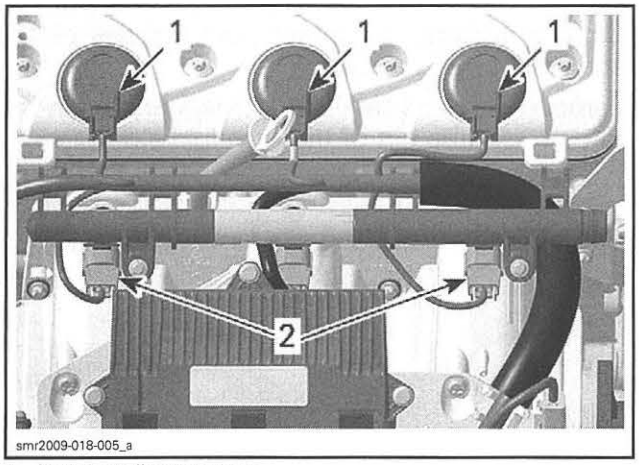

1. Ignition coil connectors
2. Fuel injector connectors

Unplug the manifold air pressure sensor (MAPS), the engine connector and the manifold air temperature sensor (MATS).

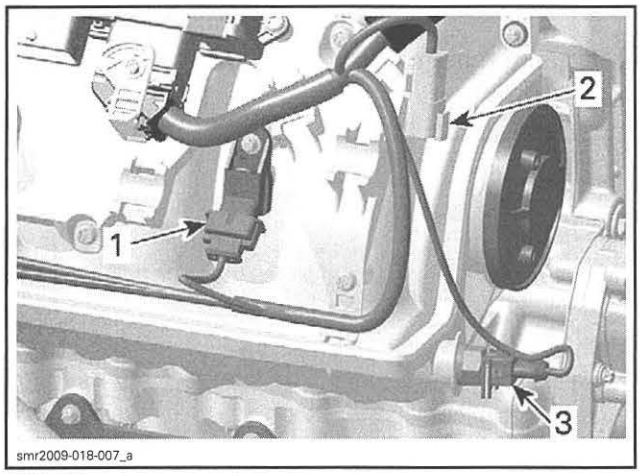

TYPICAL
1. MAPS connector
2. Engine connector location
3. MATS connector

Detach the engine connector housing from the ECM support.

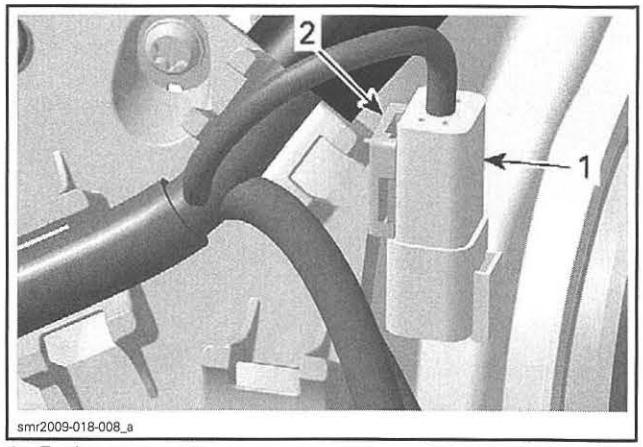

1. Engine connector
2. ECM support

Unplug the knock sensor (KS), the magneto and the throttle actuator connectors.

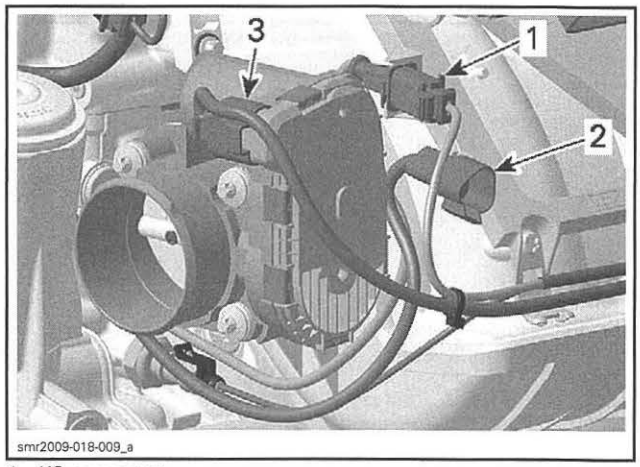

1. KS connector
2. Magneto connector location
3. Throttle actuator connector

Detach the knock sensor (KS) and magneto connector housings from the ECM support. For more details, refer to *CONNECTOR INFORMATION* subsection.

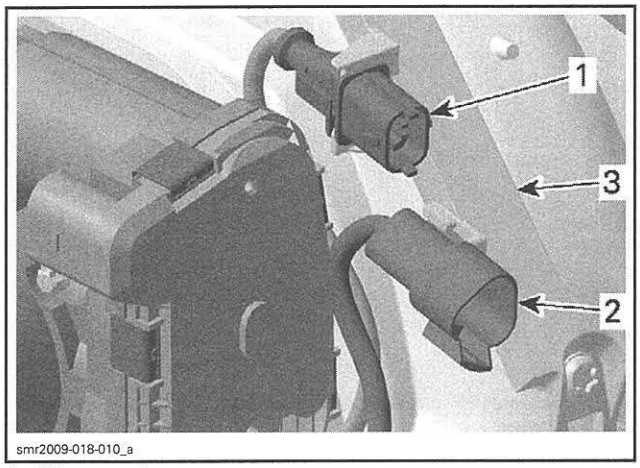

1. KS connector
2. Magneto connector
3. ECM support

Unplug the oil pressure switch (OPS).

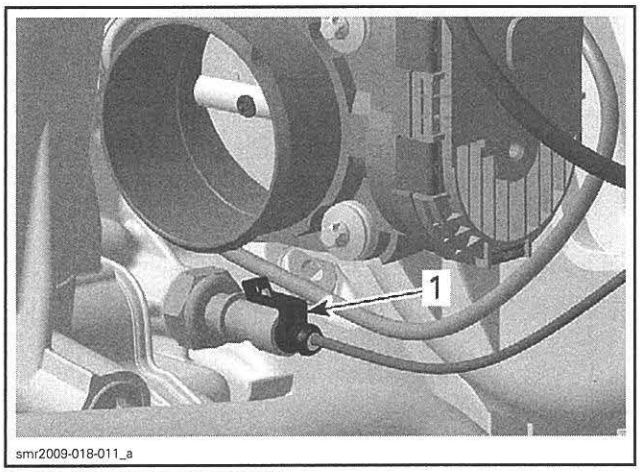

1. Oil pressure switch (OPS)

Unscrew ECM retaining screws and remove ECM from its support.

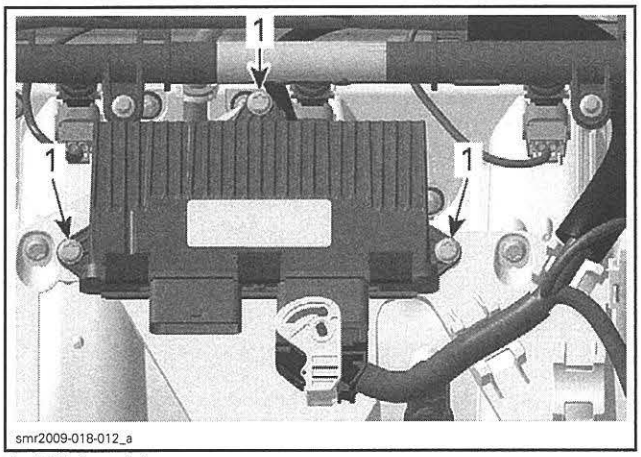

1. ECM retaining screws

Pull the engine wiring harness with the ECM plugged away from intake manifold.

On **215 engine**, disconnect both hoses at the front end of intercooler.

Remove manifold retaining screws and push the oil dipstick tube out of the manifold slot.

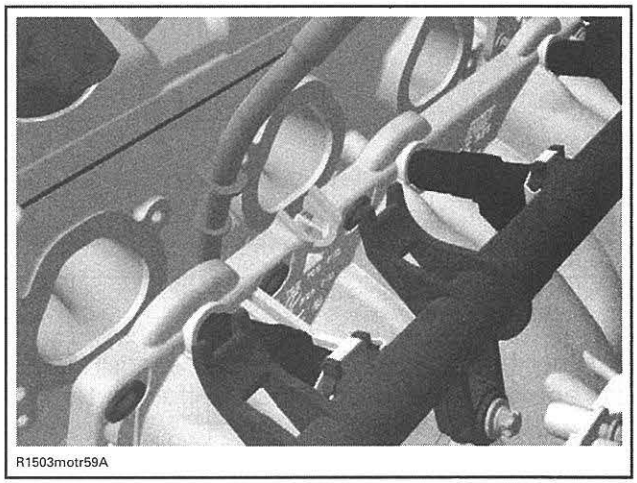

Lift intake manifold up to pull it out of the mounting brackets.

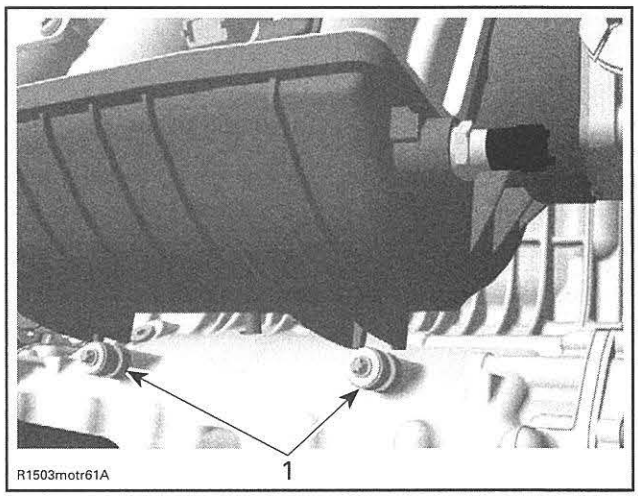

1. Mounting brackets

Pull intake manifold out.

Intake Manifold Inspection

Check intake manifold for cracks, warping at flanges or any other visible damage.

Check if intake manifold gaskets are cracked, brittle or otherwise damaged.

Replace damaged parts as necessary.

Intake Manifold Installation

For installation, reverse the removal procedure. Pay attention to following details.

Ensure that all gaskets are properly installed and in good condition.

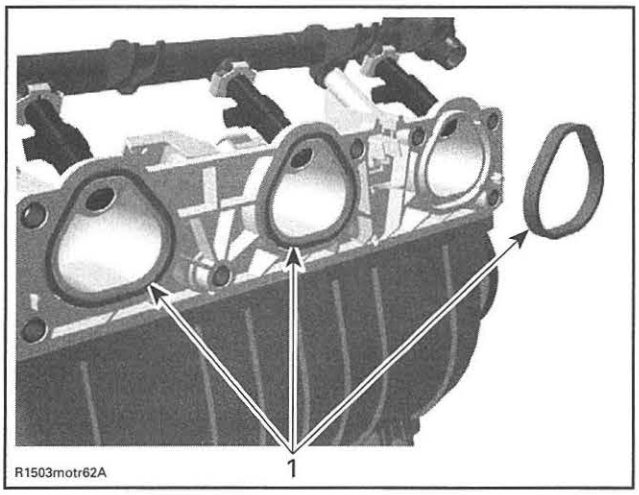

INTAKE MANIFOLD
1. Gaskets

First, position intake manifold on front mounting bracket then push manifold toward engine to then proceed with rear mounting bracket.

When installing the intake manifold, lift up the oil dipstick tube a little bit to fit in the slot of the manifold.

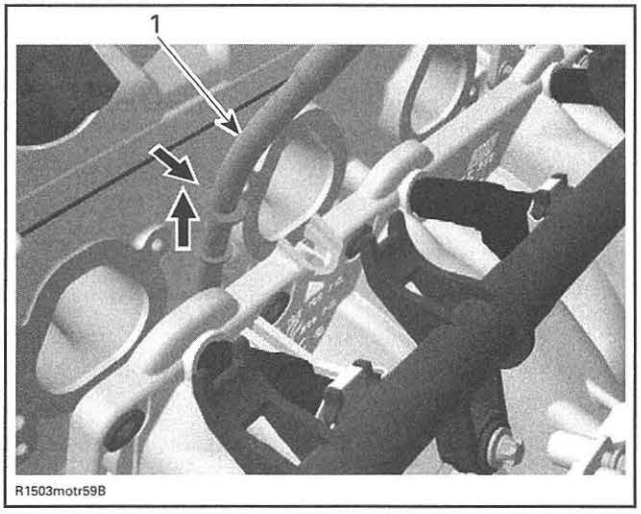

1. Oil dipstick tube

Apply LOCTITE 243 (BLUE) (P/N 293 800 060) on the intake manifold screws.

Tighten intake manifold to specification using the following sequence.

TIGHTENING TORQUE	
Intake manifold screws	9 N•m (80 lbf•**in**)

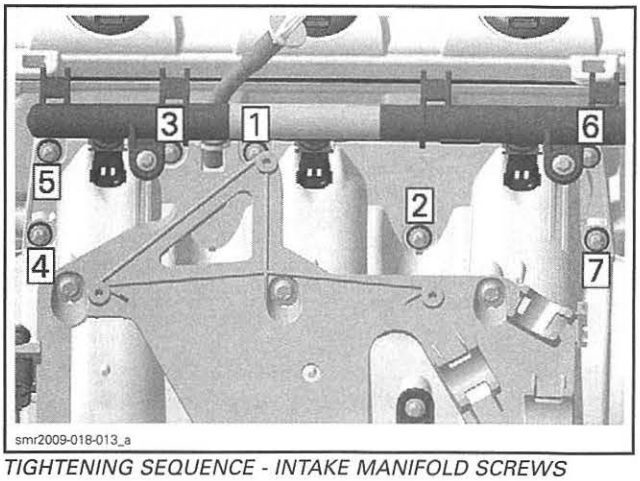

TIGHTENING SEQUENCE - INTAKE MANIFOLD SCREWS

Ensure to properly route and secure wiring harness with locking ties.

Install the ECM on its support.

ECM RETAINING SCREWS	
PRODUCT	LOCTITE 243 (BLUE) (P/N 293 800 060)
TORQUE	9 N•m (80 lbf•**in**)

Install all other removed parts.

215 Engine

NOTE: Make sure the outlet hose of the intercooler is installed in its holding device (located on the oil filler tube) otherwise the hose will scuff on the engine block.

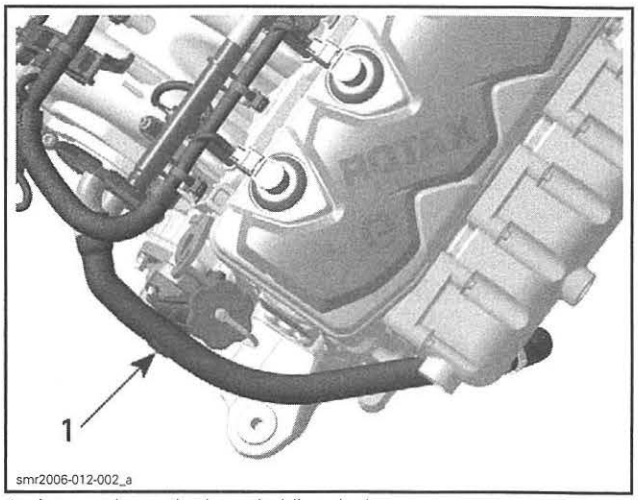

1. Intercooler outlet hose holding device

FLAME ARRESTER

Flame Arrester Location

The flame arrester is integrated in the intake manifold.

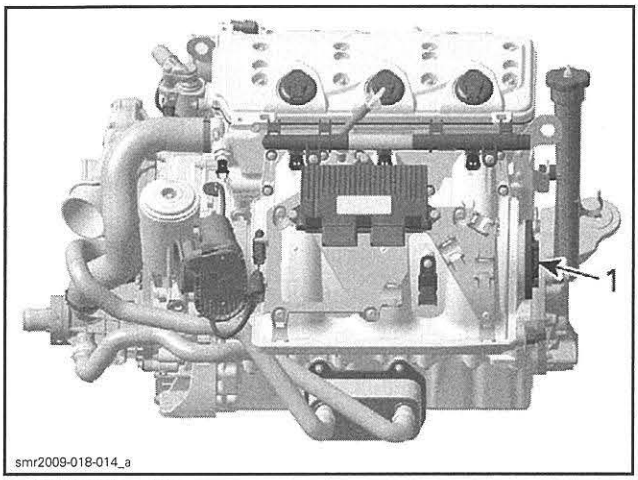

1. Flame arrester

Flame Arrester Inspection

The flame arrester in the intake manifold is maintenance free.

Flame Arrester Replacement

NOTE: The flame arrester can not be removed from the intake manifold.

Replace intake manifold if necessary. Refer to *INTAKE MANIFOLD* in this subsection.

SUPERCHARGER (215 AND 260 ENGINES)

SERVICE TOOLS

Description	Part Number	Page
4-PIN SOCKET	529 035 948	58, 61
BEARING SUPPORT/PUSHER	529 035 950	60–61
CAMSHAFT LOCKING TOOL	529 035 839	53
NEEDLE BEARING PUSHER	529 036 237	63
SUPERCHARGER GEAR HOLDER	529 036 025	54
SUPERCHARGER RETAINING KEY	529 036 027	57–58, 64
SUPPORT PLATE	529 035 947	54, 57, 60–61
TORX ADAPTER	529 035 938	56, 65

SERVICE PRODUCTS

Description	Part Number	Page
ISOFLEX GREASE TOPAS NB 52	293 550 021	62
LOCTITE 243 (BLUE)	293 800 060	61–62, 64–65
LOCTITE 5910	293 800 081	64
SUPER LUBE GREASE	293 550 030	65

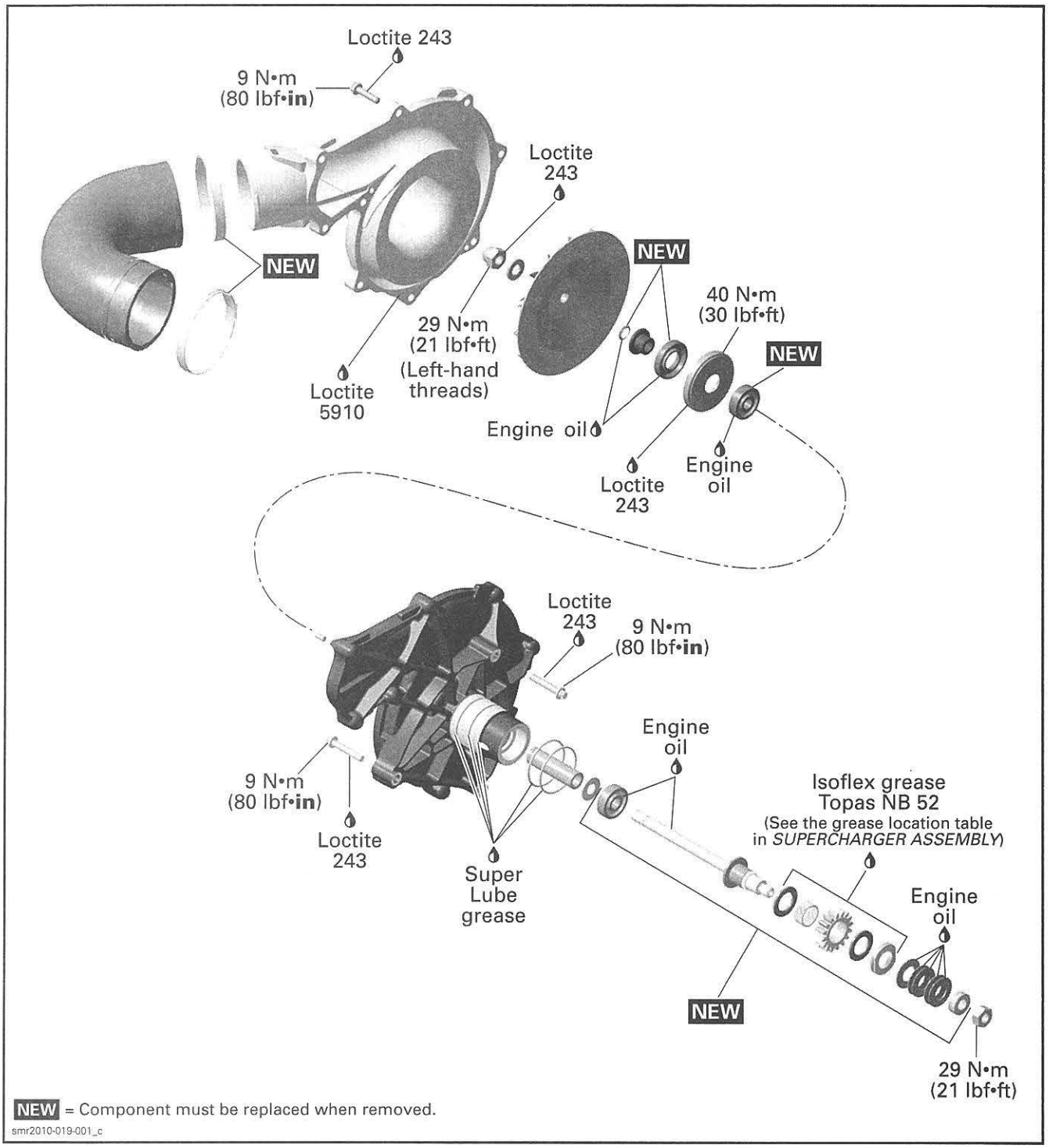

NEW = Component must be replaced when removed.

smr2010-019-001_c

INSPECTION

SUPERCHARGER INLET CLEANLINESS

NOTE: A lower than usual maximum RPM at full throttle might be caused by a dirty supercharger inlet.

To access supercharger. Refer to *SUPERCHARGER ACCESS* in this subsection.

Visually inspect supercharger inlet side for oil, salt or any other deposits.

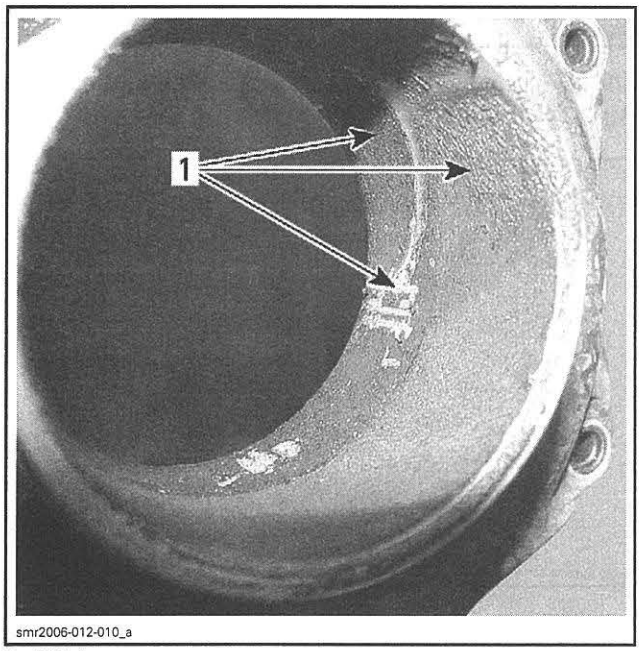

1. Dirt here

If dirt is found, proceed as follows.

1. Remove supercharger and perform the clutch slipping moment test. Inspect bearings and friction clutch. Replace bearings and clutch components as necessary.
2. Separate supercharger housing.

NOTE: Since supercharger is disassembled, it is recommended to completely inspect it.

3. Clean internal housing and turbine using a brush and cleaning solvent to get rid of oil deposits.
4. Blow dry with compressed air.

NOTICE Do not let turbine spin when using compressed air.

5. Complete usual assembly procedures as described in this subsection.

SUPERCHARGER CLUTCH SLIPPING MOMENT (ON ENGINE)

To access supercharger. Refer to *SUPERCHARGER ACCESS* in this subsection.

Remove cylinder head cover, refer to *CYLINDER HEAD* subsection.

Remove spark plugs.

Turn engine by rotating the supercharger nut counterclockwise until the position lines on oil separator cover are lined up as shown in the following illustration.

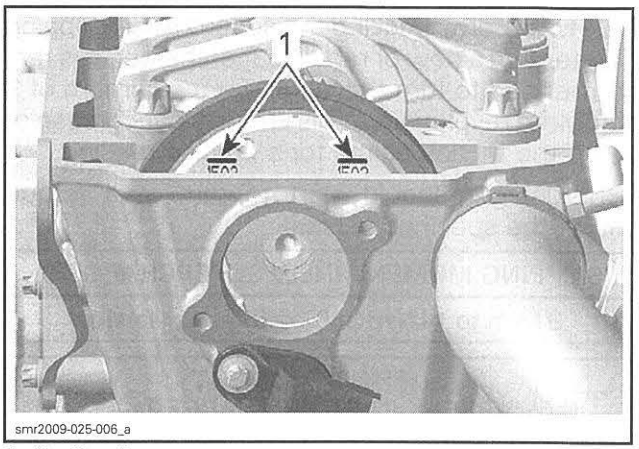

1. Position lines

Lock camshaft to prevent camshaft rotation while checking slipping moment of supercharger.

REQUIRED TOOL
CAMSHAFT LOCKING TOOL (P/N 529 035 839)

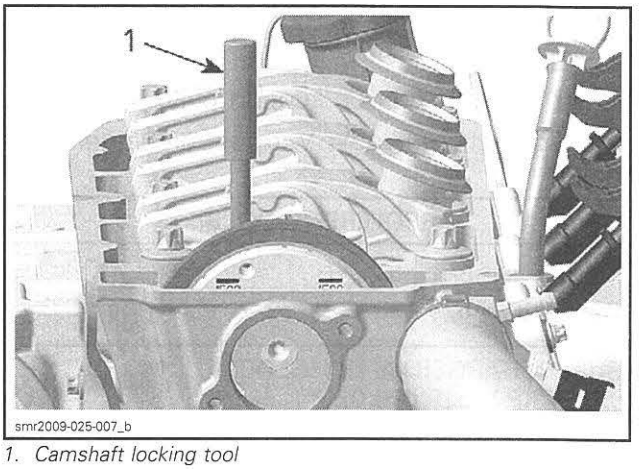

1. Camshaft locking tool

Check slipping moment counterclockwise by using a torque wrench with actual torque viewer. A mirror is useful to see the viewer.

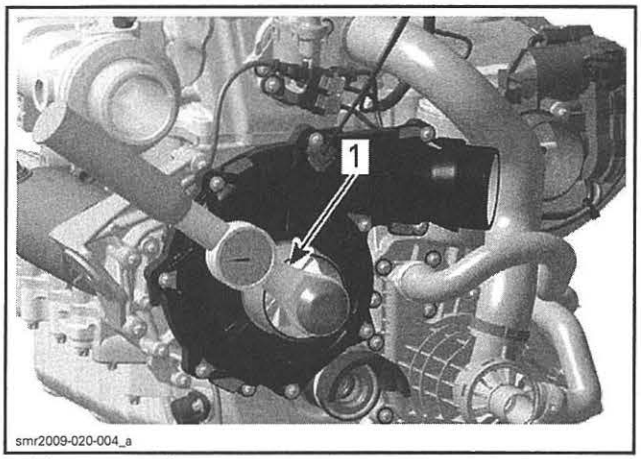

1. Torque wrench

NOTE: Before checking the supercharger slipping moment on a new or rebuilt supercharger, it is recommended to turn the clutch for a minimum of 3 complete revolutions. This will dissipate grease or oil on the friction shims for a precise reading.

Supercharger should start to turn at a torque within the specified values.

SLIPPING MOMENT (NEW SUPERCHARGER)
9 N•m to 14 N•m (80 lbf•**in** to 124 lbf•**in**)

SLIPPING MOMENT (BREAK-IN SUPERCHARGER)
8 N•m to 12 N•m (71 lbf•**in** to 106 lbf•**in**)

If the torque is not within specifications, repair supercharger clutch. Verify supercharger clutch components as per *SUPERCHARGER INSPECTION* in this subsection.

SUPERCHARGER CLUTCH SLIPPING MOMENT (BENCH TEST)

Mount supercharger on support plate.

Hold supercharger gear with supercharger gear holder.

REQUIRED TOOLS	
SUPPORT PLATE (P/N 529 035 947)	
SUPERCHARGER GEAR HOLDER (P/N 529 036 025)	

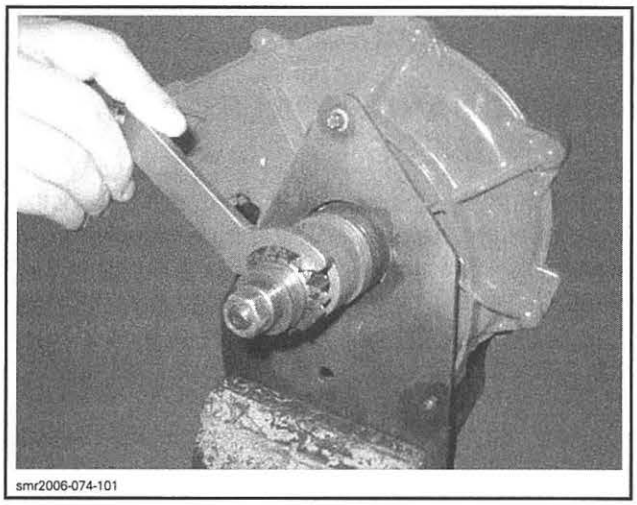

Check slipping moment counterclockwise by using a torque wrench with a viewer.

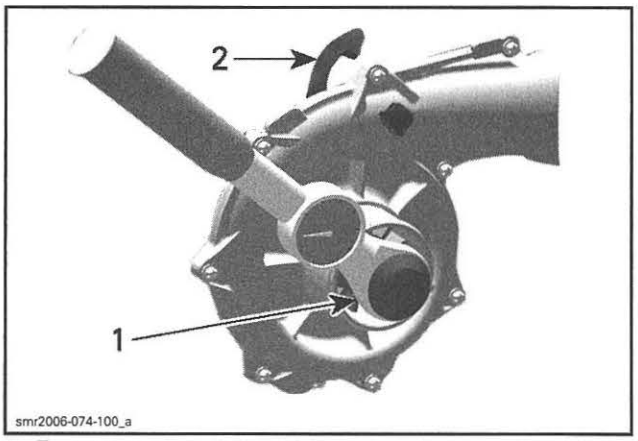

1. Torque wrench
2. Gear holder

NOTE: Before checking the supercharger slipping moment on a new or rebuilt supercharger, it is recommended to turn the clutch for a minimum of 3 complete revolutions. This will dissipate grease or oil on the friction shims for a proper reading.

Supercharger should start to turn at a torque within the specified values.

SLIPPING MOMENT (NEW SUPERCHARGER)
9 N•m to 14 N•m (80 lbf•**in** to 124 lbf•**in**)

SLIPPING MOMENT (BREAK-IN SUPERCHARGER)
8 N•m to 12 N•m (71 lbf•**in** to 106 lbf•**in**)

If the torque is not within specification, repair supercharger clutch. Verify supercharger clutch components as per *SUPERCHARGER INSPECTION* in this subsection.

TROUBLESHOOTING

The following is provided to help in diagnosing the probable source of troubles. It is a guideline and it should not be assumed to list all possible problems.

Always check for fault codes. If a fault code is detected, service the fault code first. Refer to *DIAGNOSTIC AND FAULT CODES* subsection.

ENGINE WILL NOT START (ENGINE DOES NOT TURN OVER)

1. **Supercharger seized or obstructed**
   - *Inspect and repair supercharger.*

ENGINE LACKS ACCELERATION OR POWER (DOES NOT REACH MAXIMUM RPM)

1. **Supercharger inlet is dirty**
   - *Check and clean supercharger inlet.*
   - *Check engine oil. Siphon excess of oil.*
2. **Supercharger slipping clutch defective**
   - *Check slipping clutch moment.*
   - *Repair supercharger if out of specification.*

PROCEDURES

SUPERCHARGER

Supercharger Access

On **models with suspension**, remove the moving deck. Refer to *BODY (RXT, GTX AND WAKE PRO)* subsection for proper procedure.

Remove the air intake silencer. Refer to the appropriate subsection according to model:

- *AIR INTAKE SYSTEM (MODELS WITHOUT SUSPENSION)*
- *AIR INTAKE SYSTEM (MODELS WITH SUSPENSION).*

Remove the air intake silencer support.

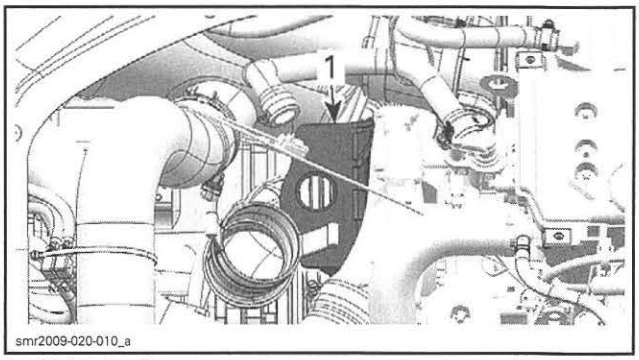

1. Air intake silencer support

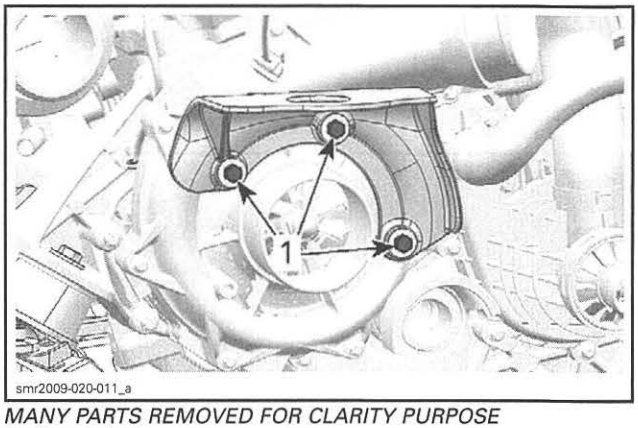

MANY PARTS REMOVED FOR CLARITY PURPOSE
1. Support screws

Supercharger Removal

Remove air inlet and outlet hoses from supercharger.

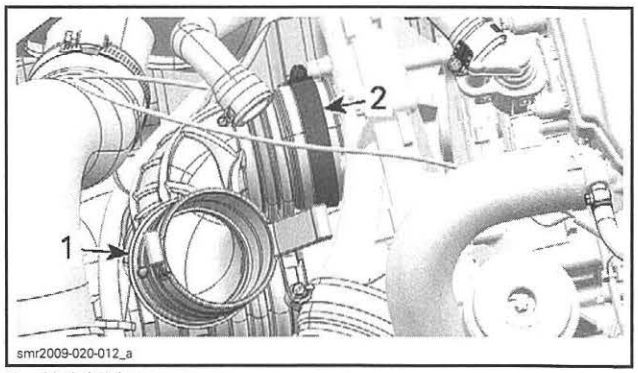

1. Air inlet hose
2. Hose clamp

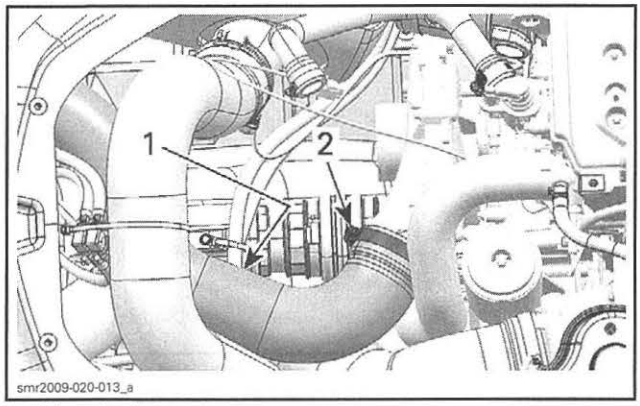

1. Air outlet hose
2. Hose clamp

Unscrew blow-by valve screws and move it aside to make room.

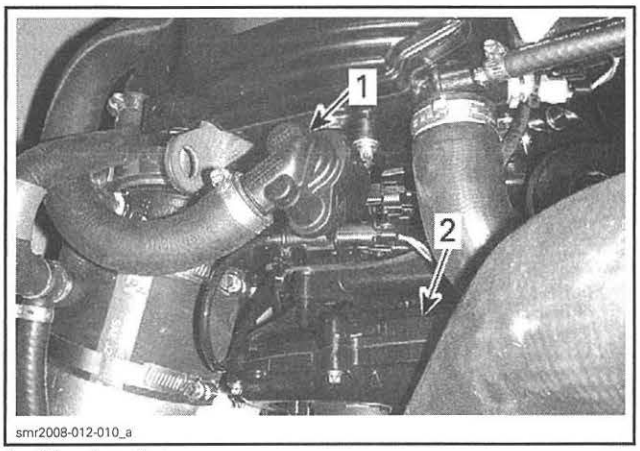

1. Blow-by valve
2. Supercharger

Using a marker, trace a mark on rubber adapter and exhaust pipe.

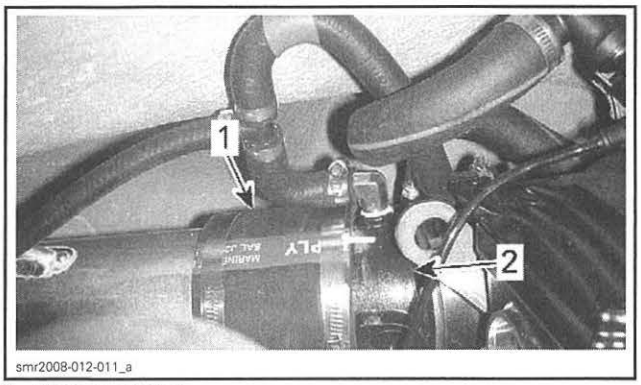

1. Rubber adapter
2. Exhaust pipe

Loosen clamp securing rubber adapter to exhaust pipe.

Detach muffler strap.

Move muffler back (± 5 cm (2 in)).

Remove retaining screws and pull out the supercharger.

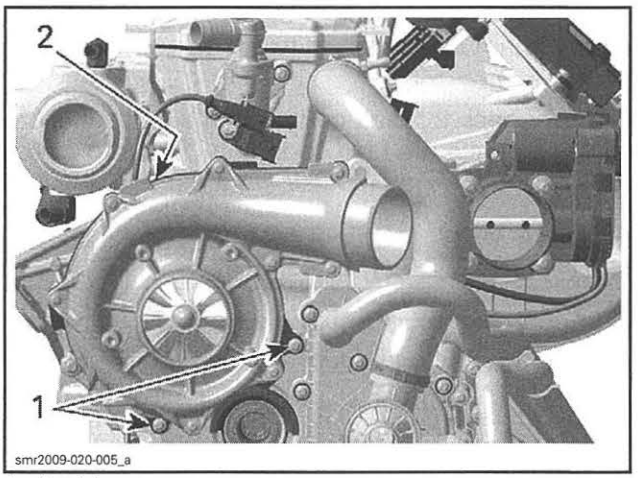

1. Retaining screws
2. Upper retaining screw (hidden behind the supercharger)

NOTE: Use the following tool to remove the upper retaining screw.

REQUIRED TOOL	
TORX ADAPTER (P/N 529 035 938)	

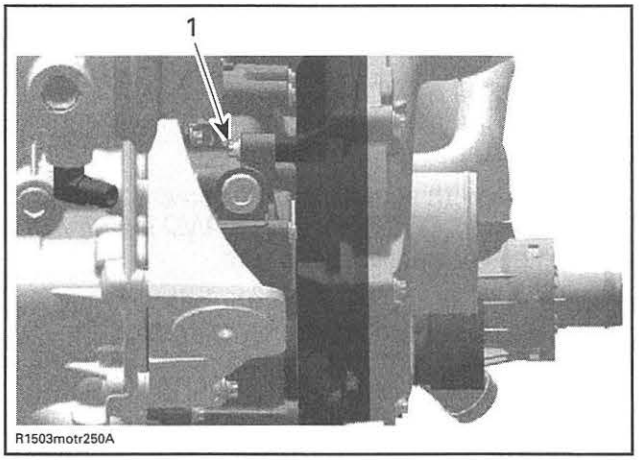

1. Upper retaining screw

Supercharger Disassembly

NOTICE **Be scrupulous when working on supercharger parts. Supercharger rotation reaches 45 000 RPM. Any modification, improper repair, assembly or damage on the parts, may result in damage of the supercharger. Strictly follow the described procedures.**

1. Secure the supercharger on its support plate.

REQUIRED TOOL	
SUPPORT PLATE (P/N 529 035 947)	

2. Take apart supercharger housing.

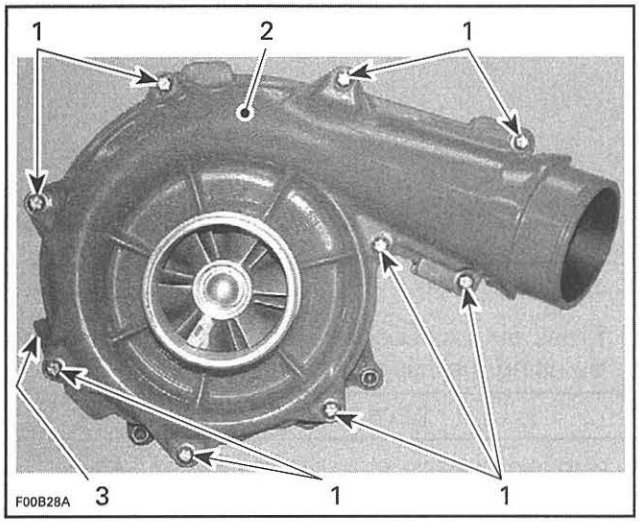

1. *Retaining screws*
2. *Housing half (intake side)*
3. *Housing half (engine side)*

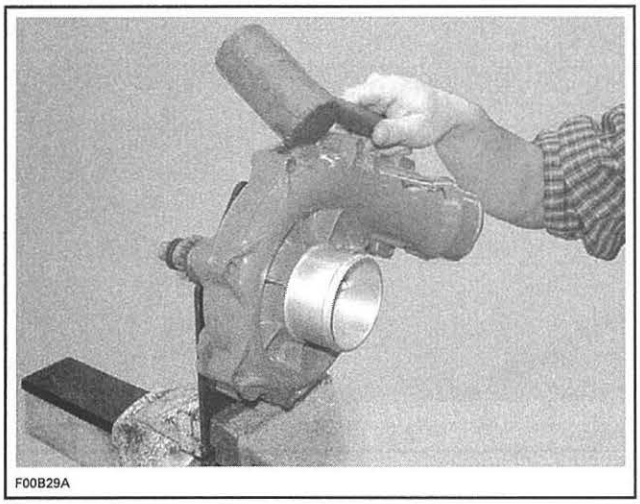

PLASTIC HAMMER

3. Loosen cap nut (turn **clockwise**) on supercharger shaft turbine side.

REQUIRED TOOL	
SUPERCHARGER RETAINING KEY (P/N 529 036 027)	

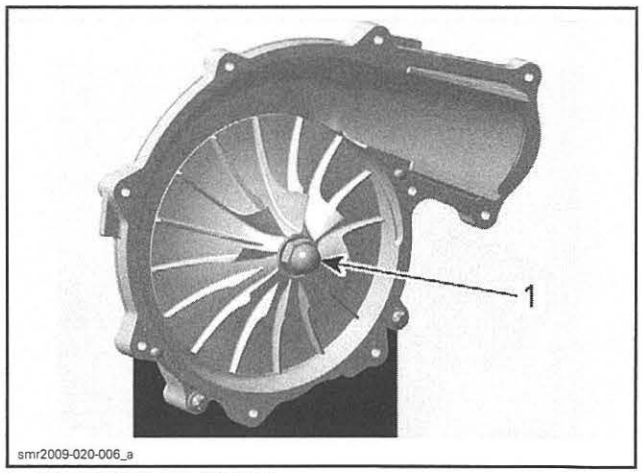

1. *Cap nut (left-hand thread)*

4. Remove washer, turbine, O-ring and step collar from supercharger shaft.

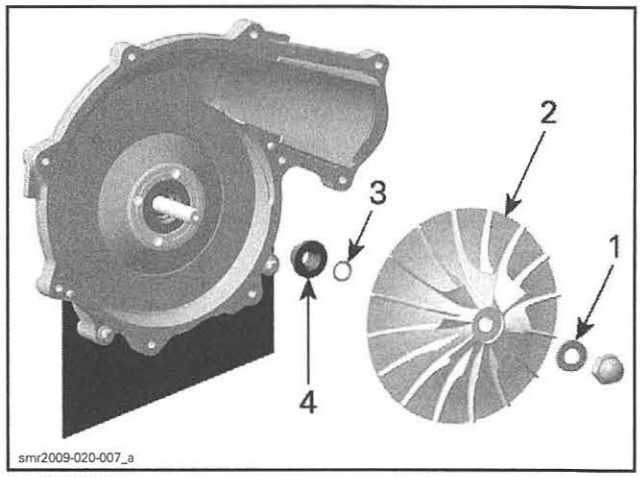

1. *Washer*
2. *Turbine*
3. *O-ring*
4. *Step collar*

5. Loosen nut on supercharger shaft engine side (turn **counterclockwise**).

REQUIRED TOOL	
SUPERCHARGER RETAINING KEY (P/N 529 036 027)	

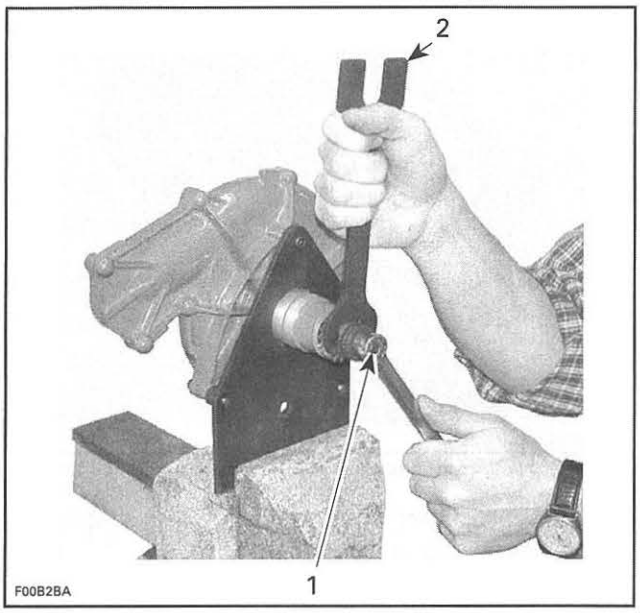

1. Nut
2. Retaining key

6. Remove L-ring, spring washers, lock washer, drive gear and needle pins by turning the supercharger upside down. Discard all needle pins.

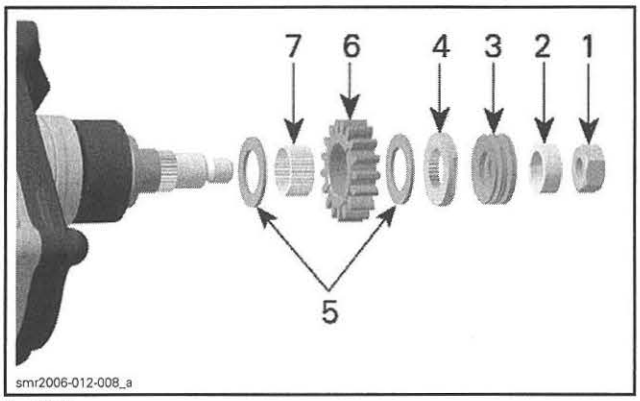

1. Nut
2. L-ring
3. Spring washers (5x)
4. Lock washer
5. Friction shims
6. Drive gear
7. Needle pins (discard all)

7. Carefully push out supercharger shaft towards engine side by using a press.

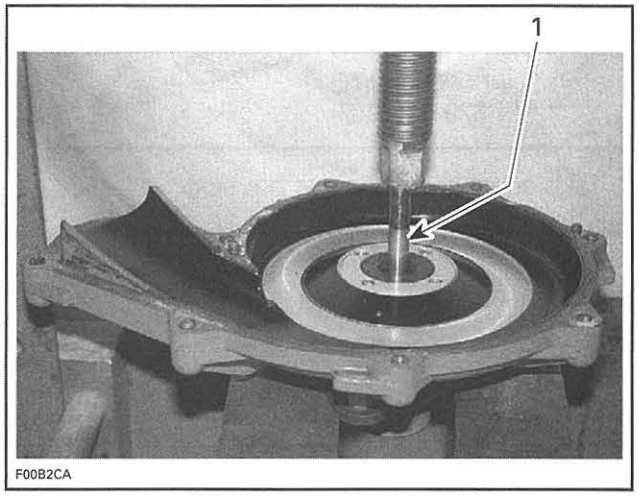

1. Supercharger shaft

8. Press out ball bearing from supercharger shaft by using a press.

REQUIRED TOOL	
SUPERCHARGER RETAINING KEY (P/N 529 036 027)	

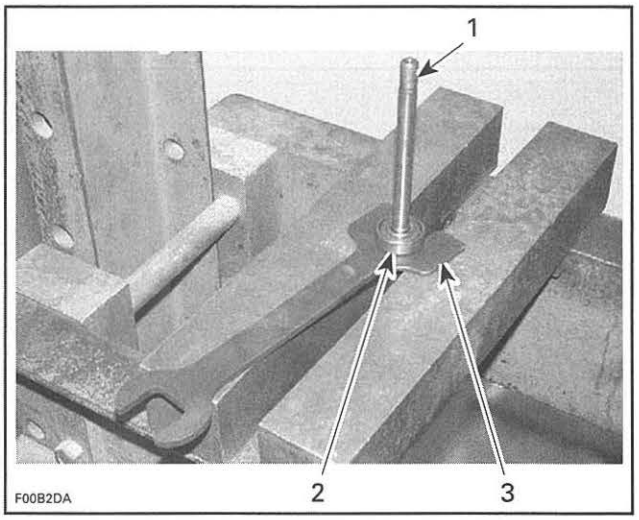

1. Supercharger shaft
2. Ball bearing
3. Retaining key

9. Remove retaining disc with seal from housing half (engine side).

REQUIRED TOOL	
4-PIN SOCKET (P/N 529 035 948)	

NOTE: It may be necessary to heat the housing with a heat gun to release the retaining disc.

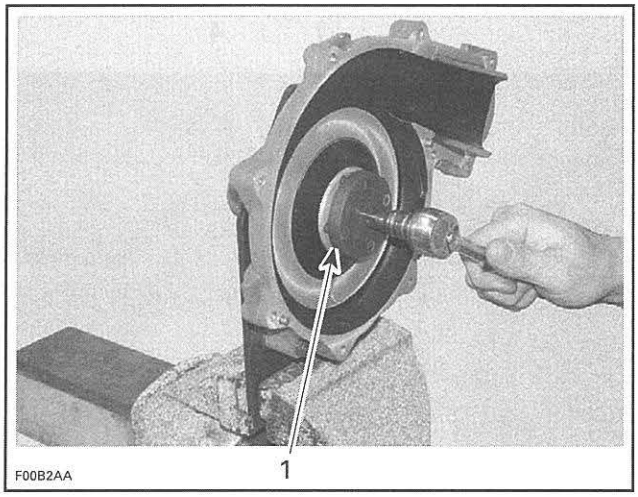

1. 4-pin socket

10. Discard the oil seal.
11. Remove and discard ball bearing from supercharger housing half (engine side) by using a press and a suitable bearing pusher.

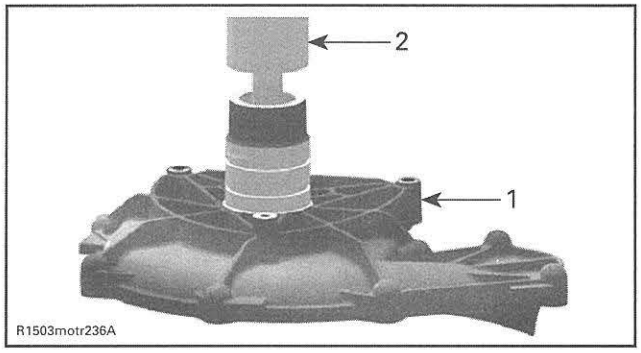

1. Supercharger housing half (engine side)
2. Bearing pusher

Supercharger Inspection

Supercharger Clutch Components and Gear

Check the wear limit on drive gear, lock washer and driven plate on supercharger shaft. Check drive gear for cracks.

NOTE: If parts are worn out or damaged, repair supercharger only by using supercharger repair kit.

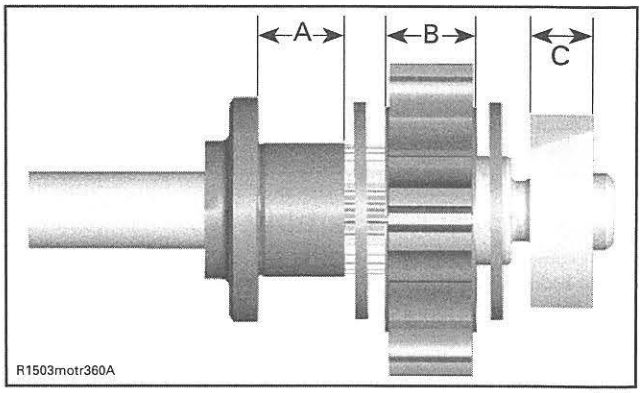

A. Driven plate journal depth
B. Drive gear thickness
C. Lock washer thickness

DRIVEN PLATE JOURNAL DEPTH	
NEW	14.460 mm to 14.500 mm (.5693 in to .5709 in)
SERVICE LIMIT	14.600 mm (.5748 in)

DRIVE GEAR THICKNESS	
NEW	11.000 mm to 11.050 mm (.4331 in to .435 in)
SERVICE LIMIT	10.900 mm (.4291 in)

LOCK WASHER THICKNESS	
NEW	4.050 mm to 4.150 mm (.1594 in to .1634 in)
SERVICE LIMIT	3.950 mm (.1555 in)

Spring Washer

Put spring washer package together as it is assembled on the supercharger shaft. Measure the height of the unloaded spring washer package.

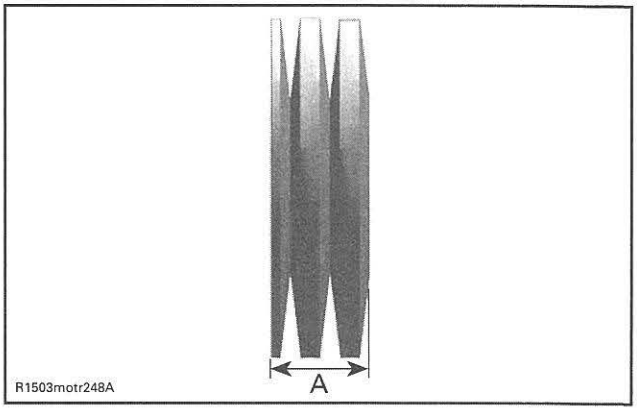

A. Spring washer package height

SPRING WASHER PACKAGE HEIGHT	
NEW	10.7 mm to 10.9 mm (.4213 in to .4291 in)
SERVICE LIMIT	10.2 mm (.4016 in)

Supercharger Assembly

NOTICE Every time when supercharger shaft has been removed, both ball bearings have to be replaced.

NOTICE Both ball bearings have to be installed with cages facing turbine side.

1. Install ball bearing on supercharger shaft. Hold bearing using the following tool.
   1.1 Apply enough engine oil on NEW ball bearing.
   1.2 Press the bearing. Use the following tool to hold the bearing.

REQUIRED TOOL	
SUPPORT PLATE (P/N 529 035 947)	

NOTICE Ensure to position ball bearing against protrusion of support plate for the installation. This way, the installation pressure will be applied to the inner race and will not be transmitted to the bearing balls which would otherwise shorten the bearing life.

NOTICE To install ball bearings and supercharger shaft always use a press, never use any beating force like a hammer.

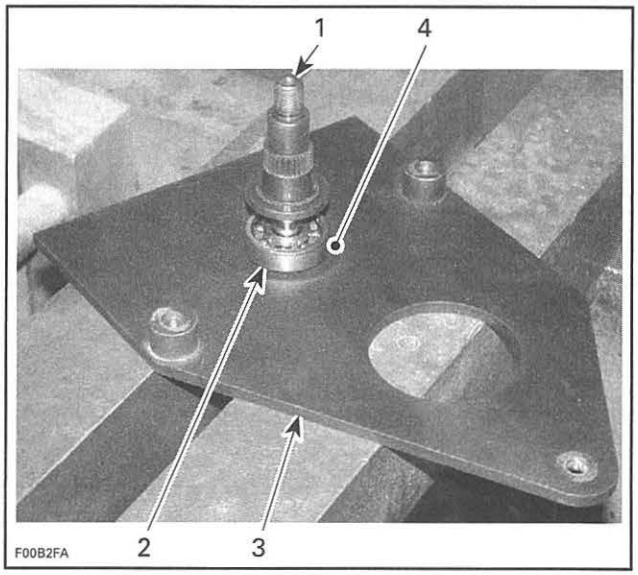

1. Supercharger shaft
2. Ball bearing
3. Bearing support plate
4. Protrusion of support plate on this side (underneath inner race)

2. Press in the ball bearing in supercharger housing half (engine side).
   2.1 Apply enough engine oil on NEW ball bearing.
   2.2 Press the bearing using the following tool.

REQUIRED TOOL	
BEARING SUPPORT/PUSHER (P/N 529 035 950)	

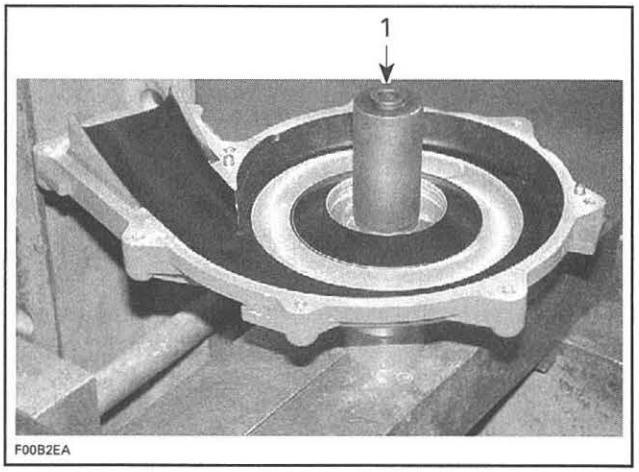

1. Bearing support/pusher

3. Secure the supercharger housing plate (engine side) in a vice.

REQUIRED TOOL	
SUPPORT PLATE (P/N 529 035 947)	

4. Apply LOCTITE 243 (BLUE) (P/N 293 800 060) on retaining disc. If a new retaining disc is used, the threads are coated with a self-locking product.
5. Install the retaining disc in supercharger housing half.

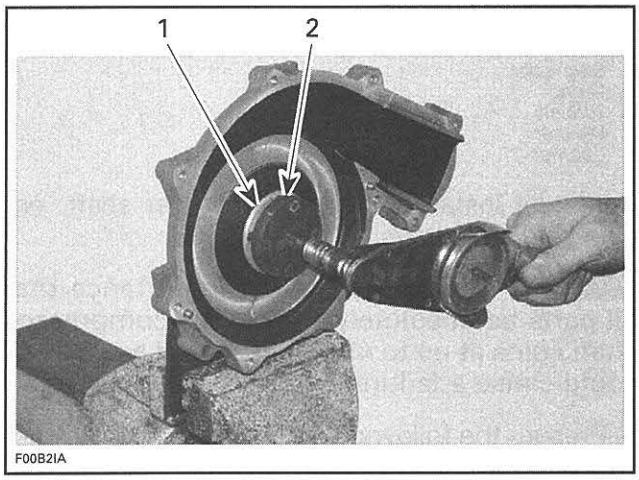

1. Retaining disc
2. 4-pin socket

REQUIRED TOOL	
4-PIN SOCKET (P/N 529 035 948)	

TIGHTENING TORQUE	
Retaining disc	40 N•m (30 lbf•ft)

6. Press supercharger shaft in housing half (engine side).
   6.1 Properly support bearing using the following tools under supercharger housing half.

REQUIRED TOOLS	
SUPPORT PLATE (P/N 529 035 947)	
BEARING SUPPORT/PUSHER (P/N 529 035 950)	

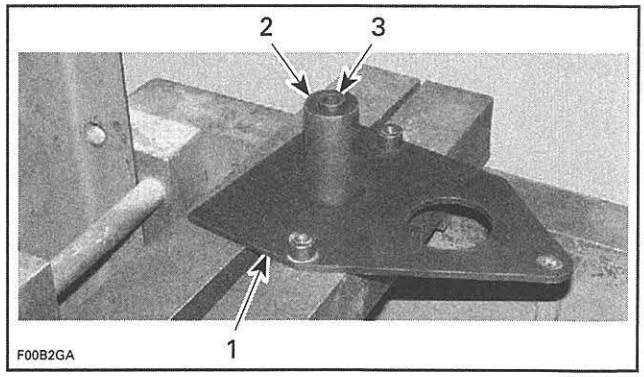

1. Support plate
2. Bearing support/pusher
3. Protrusion here

NOTICE **Before pressing in the supercharger shaft, be sure to properly support the inner race of ball bearing in supercharger housing half with the recommended tool. This way, the installation pressure will be applied to the inner race and will not be transmitted to the bearing balls which would otherwise shorten the bearing life.**

6.2 Apply heat outside of the housing with a heat gun to expand its diameter prior to inserting the shaft. Ensure there is no O-ring on the housing half prior to heating.

6.3 Apply engine oil on supercharger shaft. Press shaft with thrust washer and distance sleeve together in supercharger housing half.

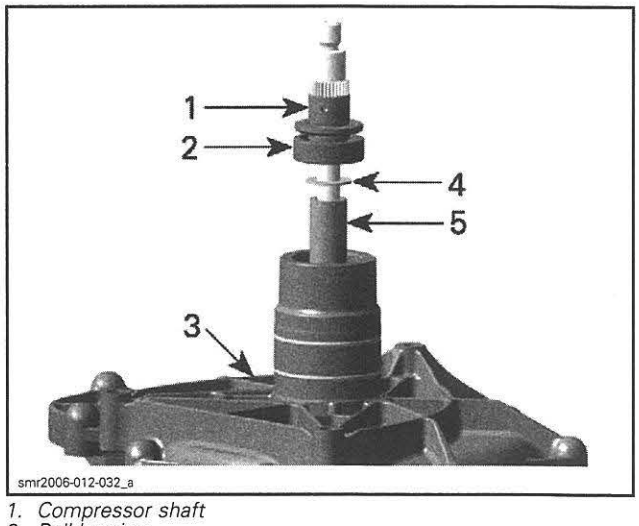

1. Compressor shaft
2. Ball bearing
3. Supercharger housing half
4. Thrust washer
5. Distance sleeve

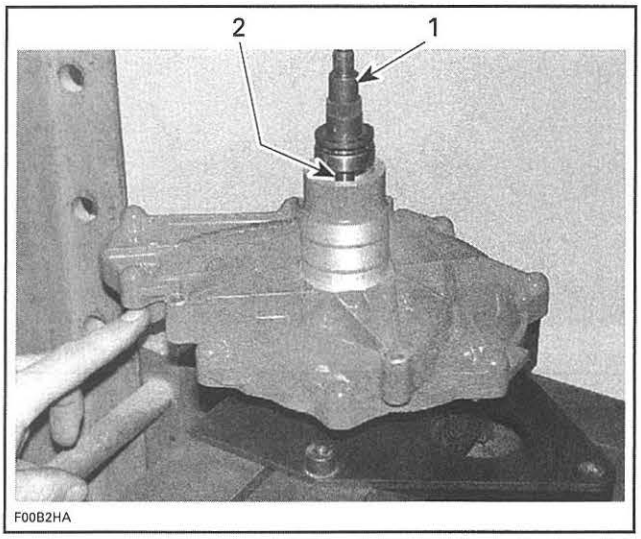

1. *Supercharger shaft*
2. *Distance sleeve*

7. Apply engine oil on seal and push into retaining disc by hand.

NOTE: Always use a NEW oil seal when assembling the supercharger.

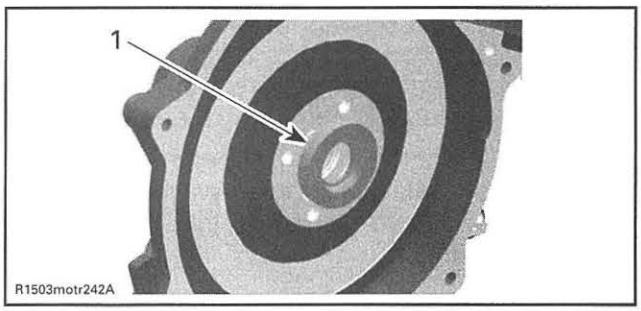

1. *Oil seal*

8. Install step collar, O-ring, turbine and washer on supercharger shaft. Apply LOCTITE 243 (BLUE) (P/N 293 800 060) on cap nut and temporary finger tight cap nut.

NOTE: The cap nut on the supercharger shaft has a left-handed thread. The Loctite has to be applied in a small dose into the nut.

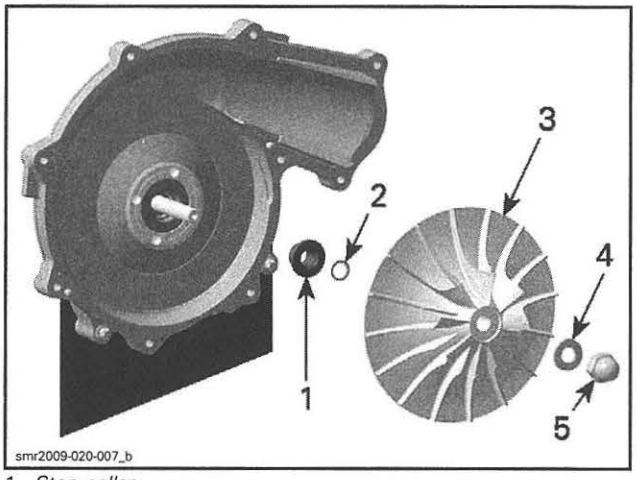

1. *Step collar*
2. *O-ring*
3. *Turbine*
4. *Washer*
5. *Cap nut*

Complete installation of supercharger shaft, engine side as follows:

NOTICE **It is of the utmost importance that all parts be absolutely clean. The compressor shaft spins at up to 45 000 RPM and any debris could cause a failure.**

9. Prepare the following parts for assembly by applying ISOFLEX GREASE TOPAS NB 52 (P/N 293 550 021) as shown in the next illustrations.

NOTICE **No other grease can be used, otherwise damage to needle bearing will occur.**

Shaft (needle bearing seat and collar)	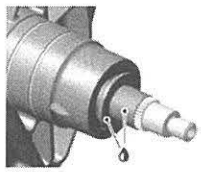
Drive gear (inner diameter)	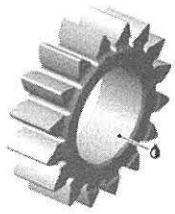
Friction shims (inner diameter and both sides)	
Lock washer (inner splines and friction shim thrust surface)	

10. Put the first friction shim on a workbench.

NOTICE **Manipulate friction shims with care, those parts are sensitive.**

11. Put the drive gear on the friction shim.
12. Install the **NEW** needle bearing in drive gear.
    12.1 Position the needle bearing on the drive gear.

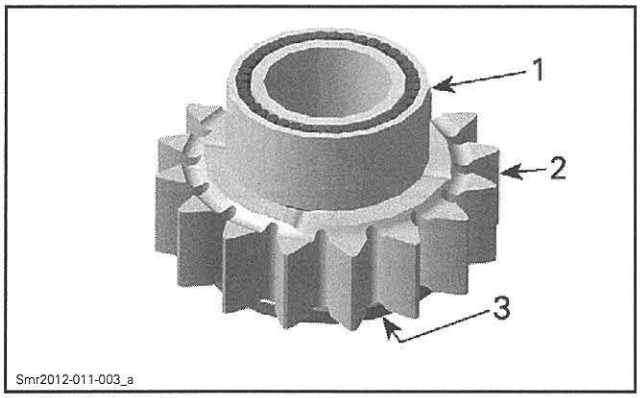

1. Needle bearing
2. Drive gear
3. Friction shim

    12.2 Push the needle pins with inner plastic cage into the drive gear.

REQUIRED TOOL
NEEDLE BEARING PUSHER (P/N 529 036 237) 

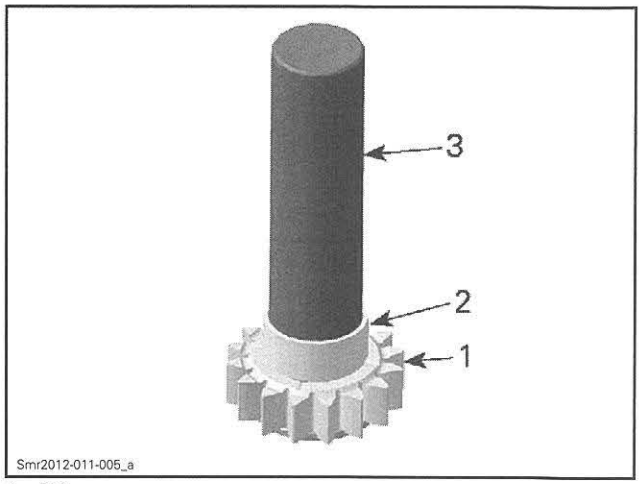

1. Drive gear
2. Outer plastic cage
3. Needle bearing pusher

    12.3 Remove needle bearing pusher and discard outer plastic cage.
    12.4 Check if all 40 needle pins are in place.

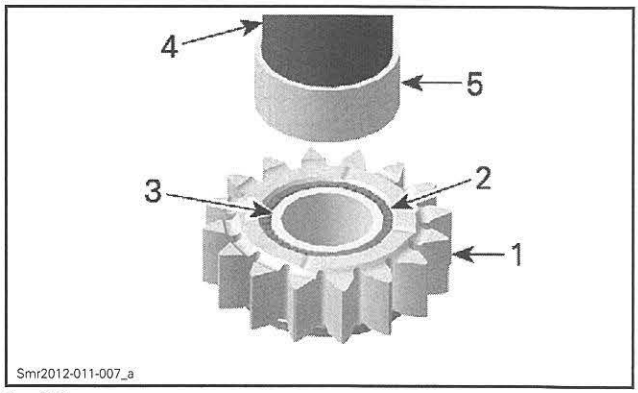

1. Drive gear
2. 40 needle pins
3. Inner plastic cage
4. Needle bearing pusher
5. Outer plastic cage

13. Place the second friction shim on the drive gear.
14. Install the package consisting of friction shim, drive gear with needle bearing and friction shim on the hub side of the compressor shaft.

NOTE: The inner plastic cage is pushed out upon installation on compressor shaft.

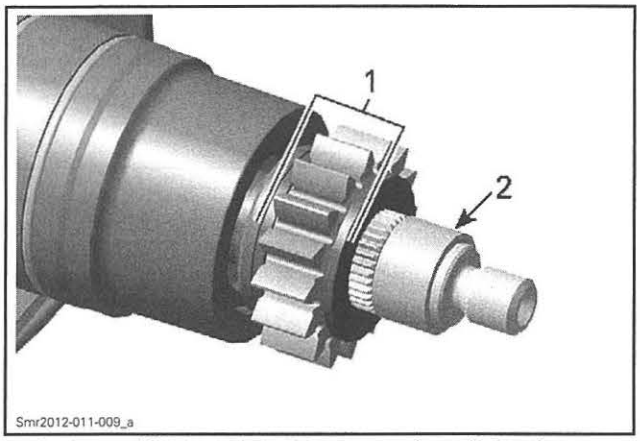

1. Package of friction shims, drive gear and needle bearing
2. Inner plastic cage

15. Discard the inner plastic cage and install the lock washer.
16. Apply engine oil to the spring washers.
17. Position the spring washers as per illustration.

NOTICE **When installing the spring washers, take care of the exact installation direction of the washers.**

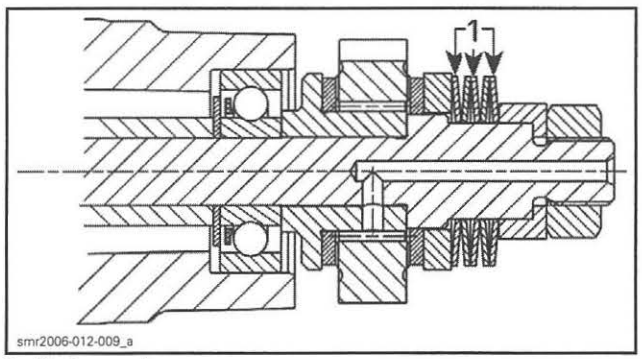

1. Spring washers

18. Install the L-ring on the compressor shaft.
19. Apply LOCTITE 243 (BLUE) (P/N 293 800 060) on the hexagonal nut threads.

TIGHTENING TORQUE	
Hexagonal nut	29 N•m (21 lbf•ft)

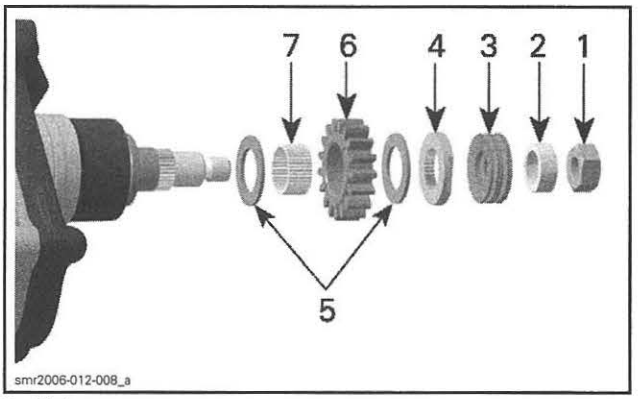

1. Nut
2. L-ring
3. Spring washers
4. Lock washer
5. Friction shims
6. Drive gear
7. Needle bearing

NOTE: The L-ring will preload the spring washers.

20. Hold the lock washer of the supercharger shaft (engine side) and tighten the cap nut.

REQUIRED TOOL
SUPERCHARGER RETAINING KEY (P/N 529 036 027)

TIGHTENING TORQUE	
Cap nut	29 N•m (21 lbf•ft)

21. Apply LOCTITE 5910 (P/N 293 800 081) on supercharger housing sealing surface.

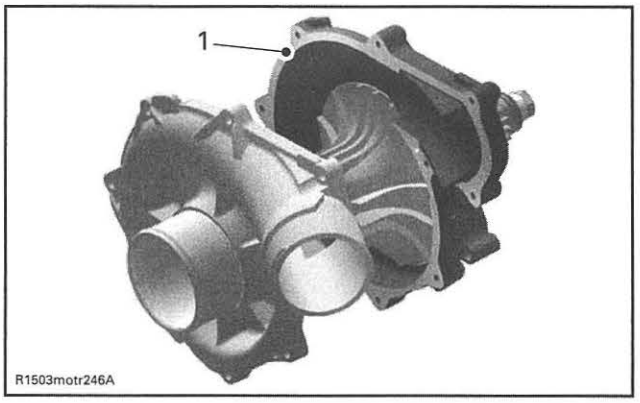

1. Apply Loctite 5910 on sealing surface

22. Assemble supercharger housing halves.
    22.1 Apply LOCTITE 243 (BLUE) (P/N 293 800 060) on retaining screws.
    22.2 Tighten supercharger housing halves screws according to the following sequence.

TIGHTENING TORQUE	
Supercharger housing halves screws	9 N•m (80 lbf•**in**)

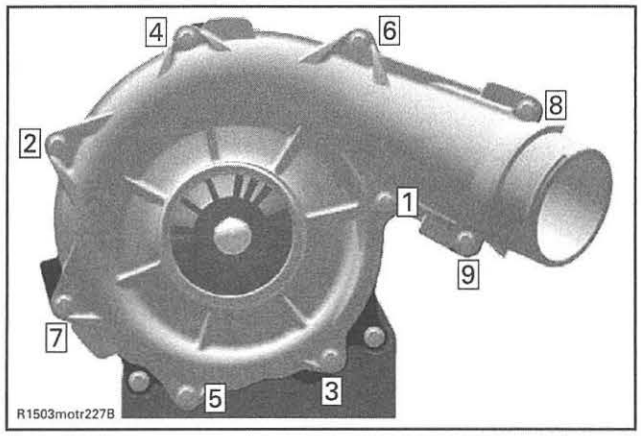

SUPERCHARGER TIGHTENING SEQUENCE

23. Verify the clutch slipping moment. Refer to *SUPERCHARGER CLUTCH SLIPPING MOMENT (BENCH TEST)* in this subsection.

Supercharger Installation

1. Grease sealing surface between supercharger and PTO housing with SUPER LUBE GREASE (P/N 293 550 030).

NOTE: Ensure O-rings are installed.

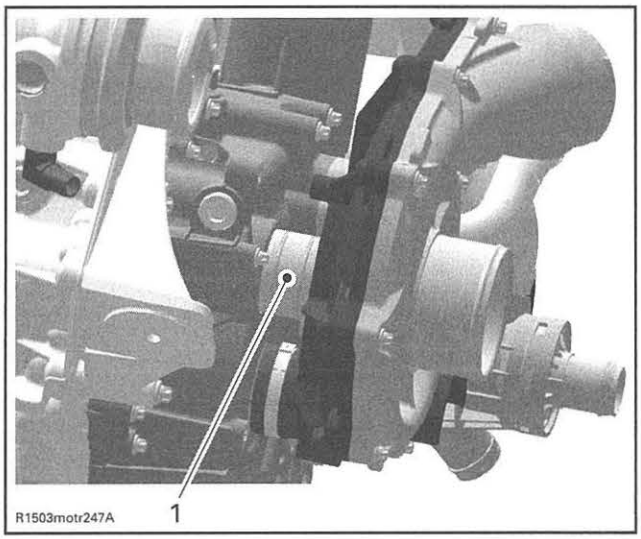

1. Super Lube grease

2. Install supercharger on PTO housing.
3. Apply LOCTITE 243 (BLUE) (P/N 293 800 060) on the retaining screws.
4. Tighten supercharger retaining screws to specifications.

TIGHTENING TORQUE	
Supercharger retaining screws	9 N•m (80 lbf•**in**)

NOTE: For the upper retaining screw the following tool must be used mounted 90° to torque wrench.

REQUIRED TOOL	
TORX ADAPTER (P/N 529 035 938)	

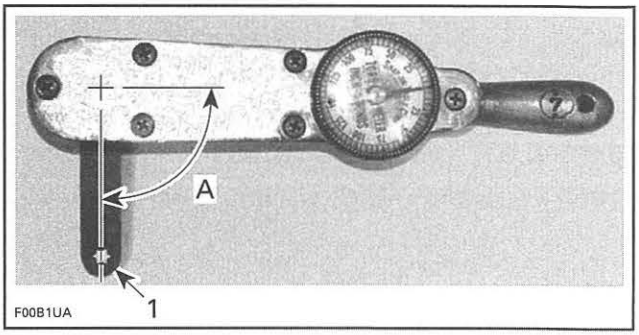

1. Torx adapter perpendicular to torque wrench
A. 90°

NOTICE Not installing the tool as shown will change the torque applied to the screw.

5. After complete installation of the supercharger, the slipping moment has to be rechecked. Refer to *SUPERCHARGER CLUTCH SLIPPING MOMENT (ON ENGINE)* at the beginning of this subsection.

INTERCOOLER (215 ENGINE)

SERVICE TOOLS

Description	Part Number	Page
VACUUM/PRESSURE PUMP	529 021 800	68

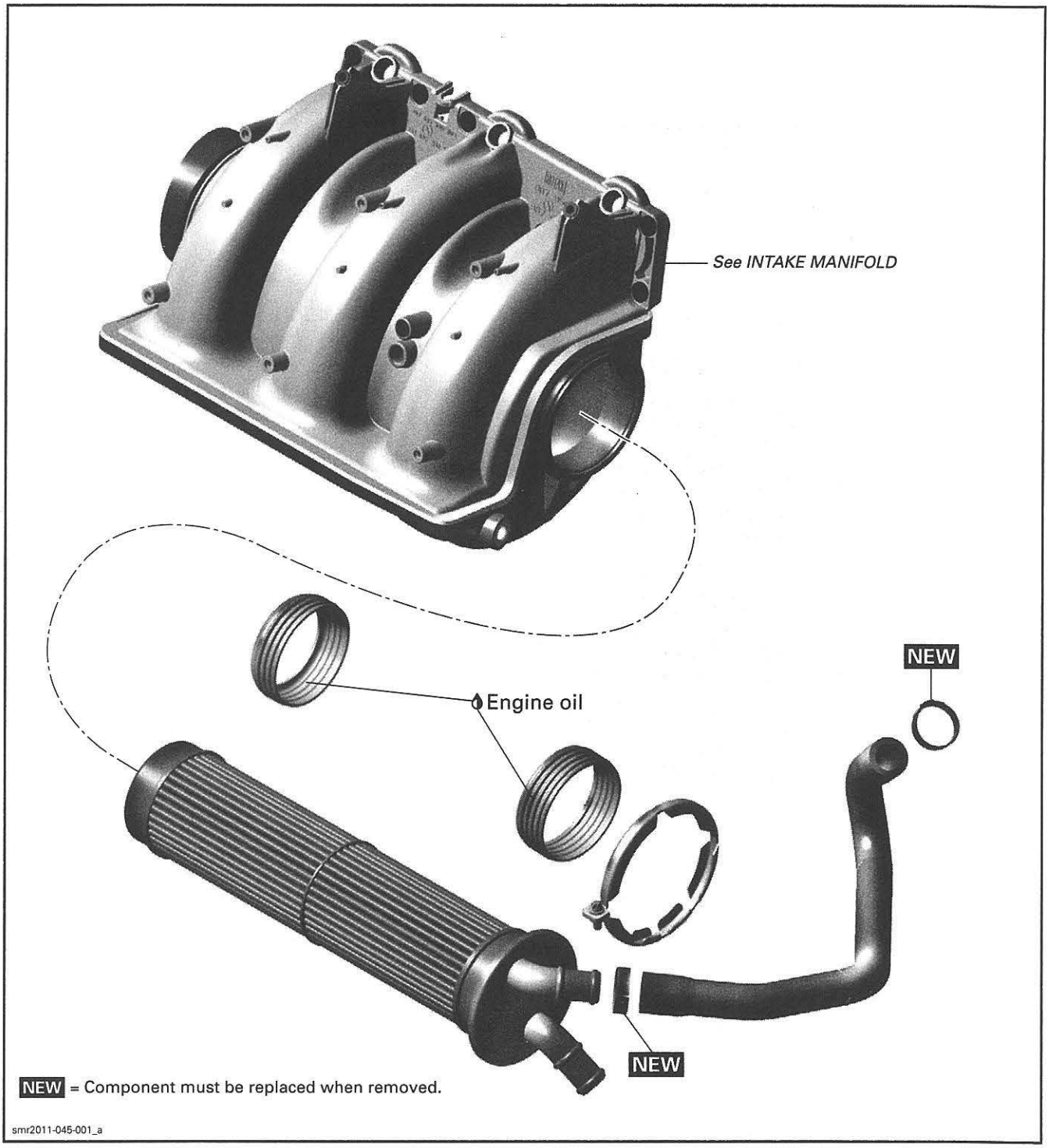

PROCEDURES

INTERCOOLER

Intercooler Leak Test

Perform intercooler leak test when engine looses performance, when there is white exhaust smoke or when temperature in exhaust system is to high.

⚠ WARNING

Let engine cool down prior to perform leak test. Direct contact with hot engine may result in skin burn.

NOTE: The inspection can be done while intercooler remains installed in intake manifold.

Remove:

- Outlet hose from exhaust manifold
- Inlet hose from intercooler.

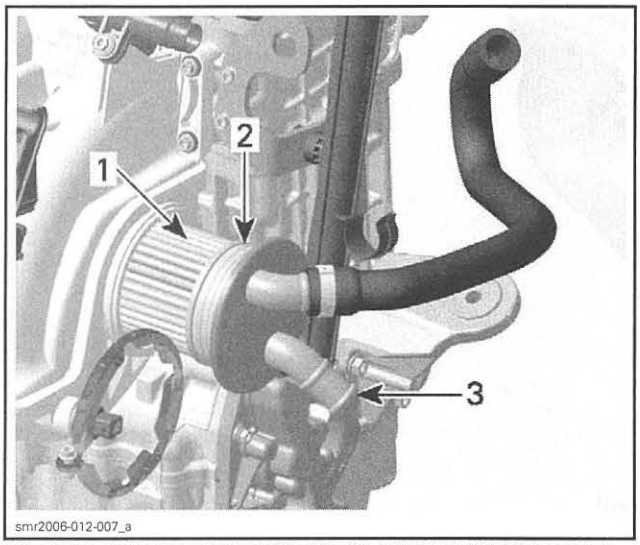

INTERCOOLER PULLED OUT FOR CLARITY PURPOSE ONLY
1. *Intercooler*
2. *Outlet hose*
3. *Inlet nipple*

Plug intercooler inlet nipple.

Install an adapter on the outlet hose to connect a pressure pump.

REQUIRED TOOL	
VACUUM/PRESSURE PUMP (P/N 529 021 800)	

Pressurize the intercooler as follows:

PRESSURE TEST
69 kPa (10 PSI) for 10 minutes minimum

If there is a pressure drop, first spray hoses and adapters with a soapy solution to ensure they are not leaking.

Otherwise, remove intercooler from manifold to spray soapy water on it. If air bubbles are present, replace the intercooler. Refer to procedures further in this subsection.

Properly reinstall removed parts.

Make sure the intercooler outlet hose is installed in the holding device (located on the oil filler tube) otherwise the hose will scuff on the engine block.

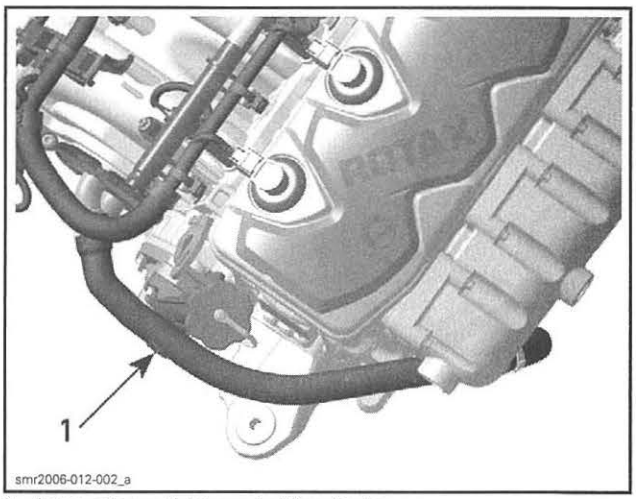

1. *Intercooler outlet hose holding device*

Intercooler Removal

Remove intake manifold. Refer to *INTAKE MANIFOLD* subsection.

Remove collar from intercooler.

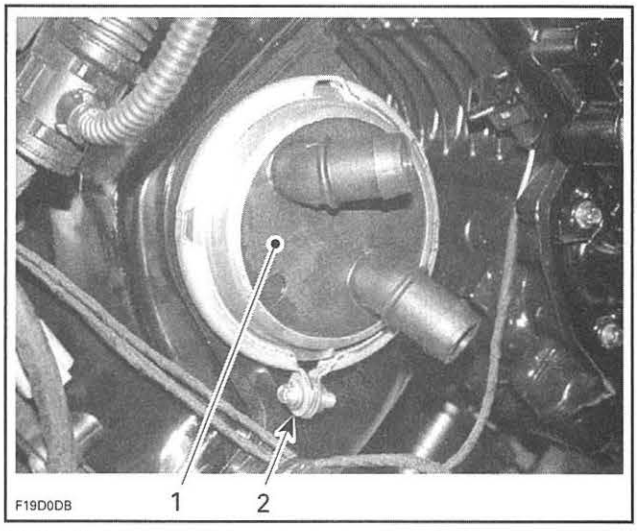

TYPICAL
1. *Intercooler*
2. *Collar*

Carefully pull intercooler out of intake manifold.

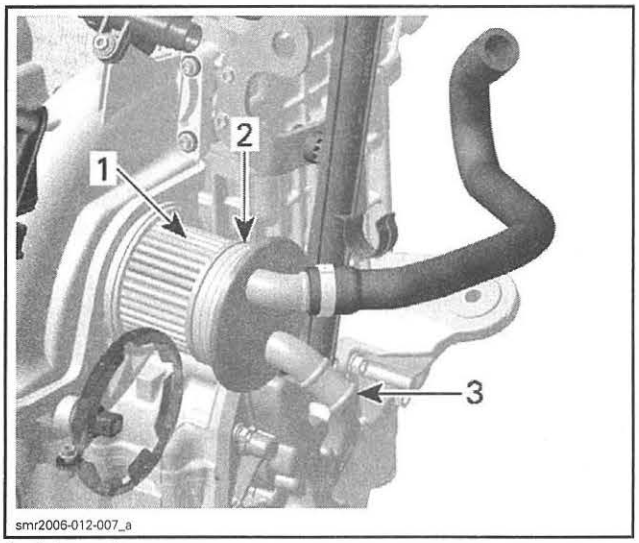

1. Intercooler
2. Profile ring
3. Collar

Intercooler Installation

Installation is essentially the reverse of removal procedures. However pay particular attention to the following.

Ensure profile rings are properly installed on intercooler and apply engine oil on them to ease installation.

While properly aligning the inner end of intercooler in intake manifold, gently push intercooler until it bottoms.

Rotate intercooler to position nipples as shown.

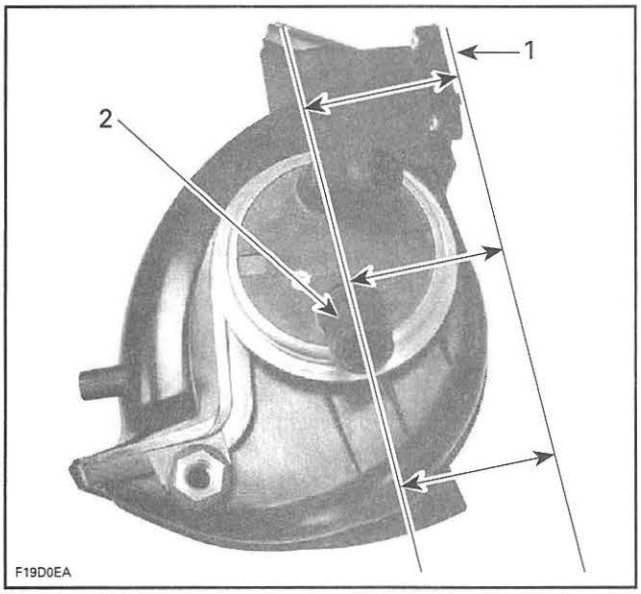

1. Intake manifold flange
2. Nipple parallel with manifold flange

NOTE: If intercooler is hard to push in, a clamp can be used to press intercooler in.

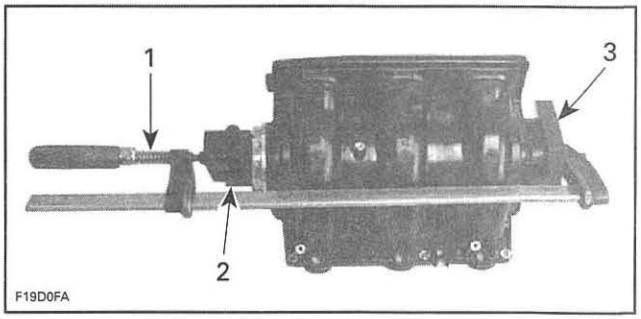

1. Clamp
2. Plastic block between nipples
3. Plastic block

Reinstall collar.

Reinstall intake manifold.

INTERCOOLER (260 ENGINE)

SERVICE TOOLS

Description	Part Number	Page
LARGE HOSE PINCHER	529 032 500	73
VACUUM/PRESSURE PUMP	529 021 800	73

Midwest Manuals
Green Manuals
Paperless Manuals
For a Better Tomorrow
If you bought this manual from any other seller please leave them
NEGATIVE feedback and notify me at bestshopmanuals@gmail.com

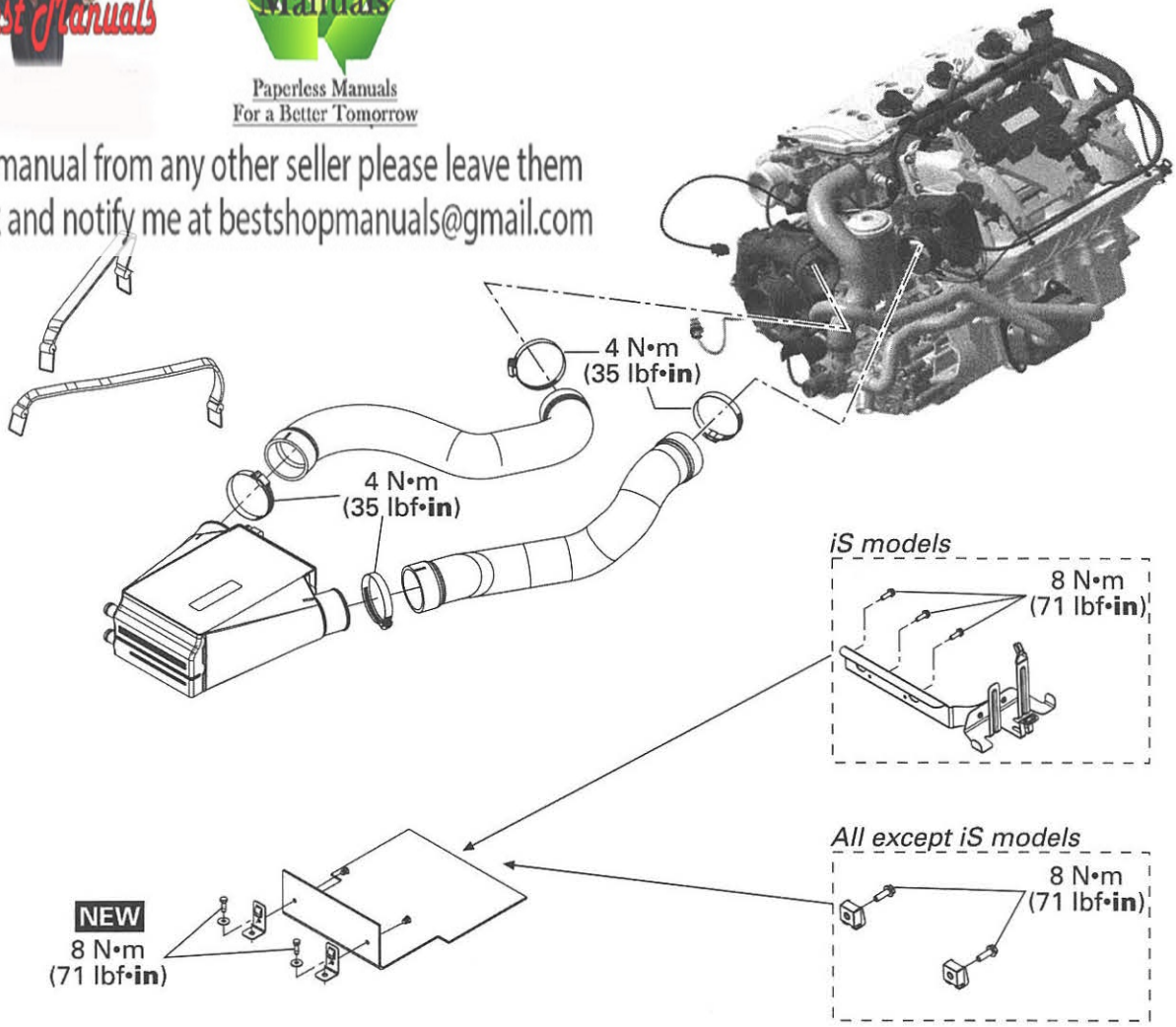

NEW = Component must be replaced when removed.

smr2012-013-100_a

MAINTENANCE

INTERCOOLER FLUSHING

Flushing the intercooler with fresh water is essential to neutralize corroding effects of salt or other chemical products present in water. It will help to clean up sand, salt, shells or other particles in intercooler.

NOTE: Intercooler is flushed with the exhaust system, as they are on the same circuit.

Exhaust system and intercooler should be flushed each time:

- Watercraft is used in salt water and is not expected to be used further the same day.
- Watercraft is used in foul water.
- Watercraft is stored for any extended time.

Refer to *EXHAUST SYSTEM* subsection for flushing procedure.

NOTICE Failure to flush the system, when necessary, will severely damage engine intercooler and/or exhaust system.

PROCEDURES

INTERCOOLER

⚠ WARNING

Let engine cool down prior to work on or near intercooler.

Intercooler Cleaning

If temperature in intake manifold is too high or if engine is down in performance, intercooler may require to be cleaned.

The exhaust system should be flushed first, as it may unclogged the intercooler. If not, then proceed with the intercooler cleaning procedure as detailed here.

NOTE: The exhaust temperature will decrease when the intercooler is clogged because more water is rerouted through the exhaust system.

To clean the intercooler, do the following:

NOTICE Never try to clean the intercooler with chemical products. Only use fresh water. Chemical products will permanently damage the internal parts of intercooler.

1. Remove the intercooler from the watercraft. See procedure further in this subsection.
2. Pour fresh water into the water outlet fitting.

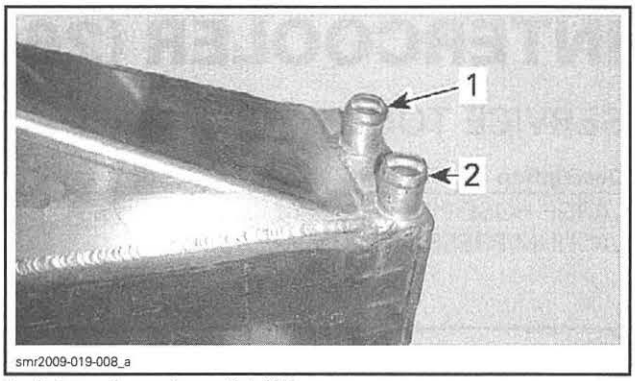

1. Intercooler water outlet fitting
2. Intercooler water inlet fitting

3. Let water soak in intercooler for a couple of hours. Occasionally, shake the intercooler to soak off deposits.
4. Rinse the intercooler using a garden hose installed on water outlet.
5. Let water flow out of intercooler a few minutes to evacuate internal deposits.
6. Check water flow.

WATER FLOW	
LOW OR ERRATIC	1. Repeat cleaning procedure.
	2. Replace the intercooler.
HIGH AND REGULAR	Intercooler is not clogged.

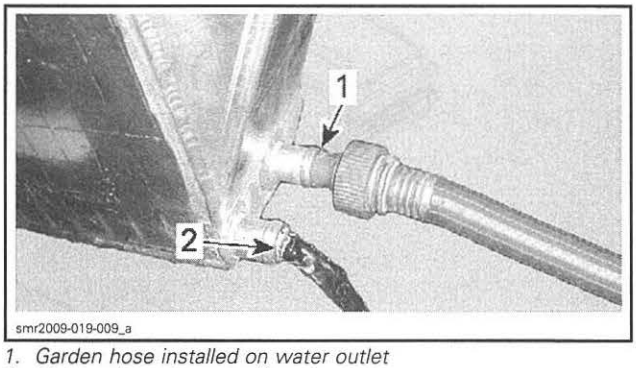

1. Garden hose installed on water outlet
2. High and regular water flow

7. Perform a leak test before installing the intercooler in the watercraft.

Intercooler Leak Test

Block intercooler water outlet hose.

REQUIRED TOOL	
LARGE HOSE PINCHER (P/N 529 032 500)	

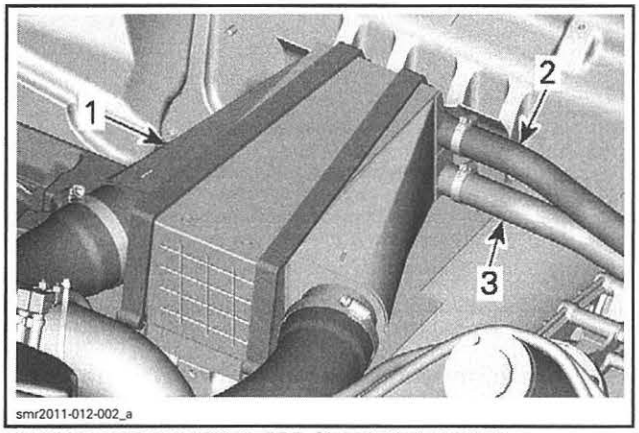

smr2011-012-002_a

MANY PARTS REMOVED FOR CLARITY PURPOSE
1. *Intercooler*
2. *Intercooler water outlet hose*
3. *Intercooler water inlet hose*

Unplug the intercooler water inlet hose from the intercooler.

Install the VACUUM/PRESSURE PUMP (P/N 529 021 800) on intercooler water inlet fitting.


529021800

BLEED HOSE FITTING

Pressurize the intercooler.

PRESSURE TEST
69 kPa (10 PSI) for 10 minutes minimum

If there is a pressure drop, first spray tool, hoses and adapters with a soapy water solution to ensure they are not leaking.

Otherwise, replace the intercooler.

Intercooler Access

RXT and GTX with Suspension

Open the boarding platform and remove both storage baskets.

RXT and GTX Without Suspension

Open the seat and remove both rear access panels.

RXP-X Series

Remove the seat and the rear handle.

Detach exhaust hose from muffler.

Intercooler Removal

Disconnect the intercooler water hoses.

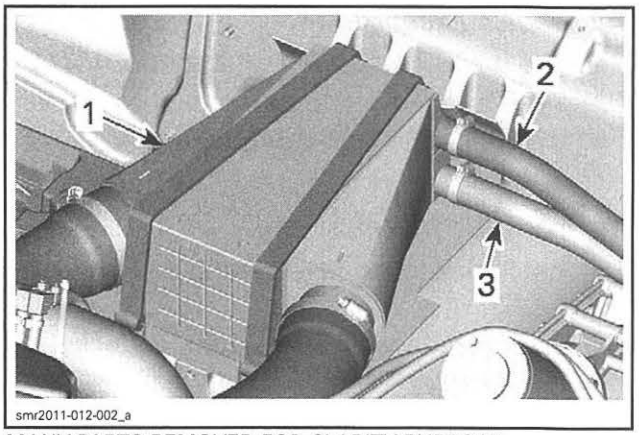

smr2011-012-002_a

MANY PARTS REMOVED FOR CLARITY PURPOSE
1. *Intercooler*
2. *Intercooler water outlet hose*
3. *Intercooler water inlet hose*

Disconnect both air hoses.

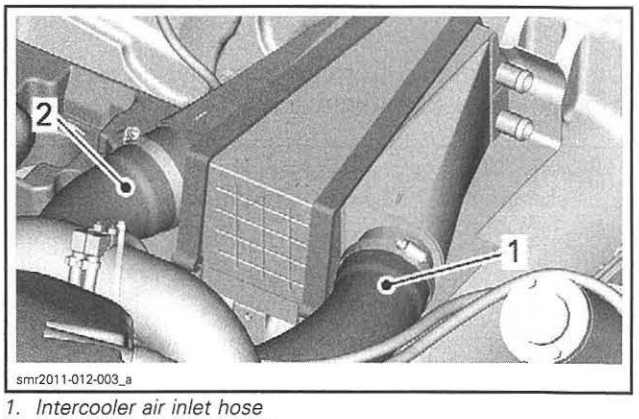

smr2011-012-003_a

1. *Intercooler air inlet hose*
2. *Intercooler air outlet hose*

Detach both intercooler straps.

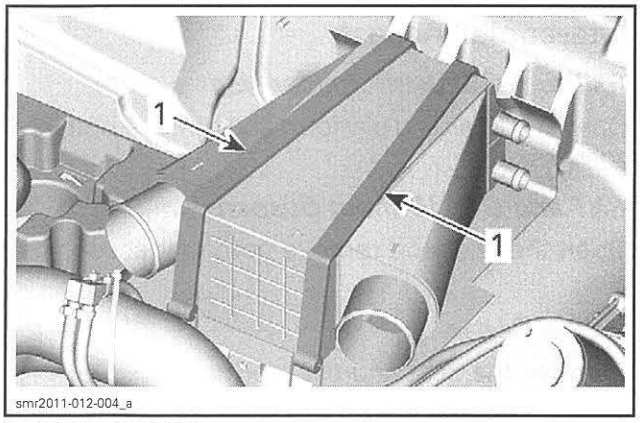

1. Intercooler straps

RXP Model

Pull intercooler out of vehicle.

All Models Except RXP

Remove the iBR actuator. Refer to *iBR AND VTS* subsection.

Remove the intercooler from vehicle by the LH opening.

Intercooler Installation

The installation is the reverse of the removal procedure.

NOTE: Ensure hoses are routed correctly and locking ties are positioned at proper locations.

INTERCOOLER ATTACHMENTS

Front Attachment Replacement

Remove the *INTERCOOLER*, see procedure in this subsection.

iS Models

Detach iS module from its support and move the module aside to make room.

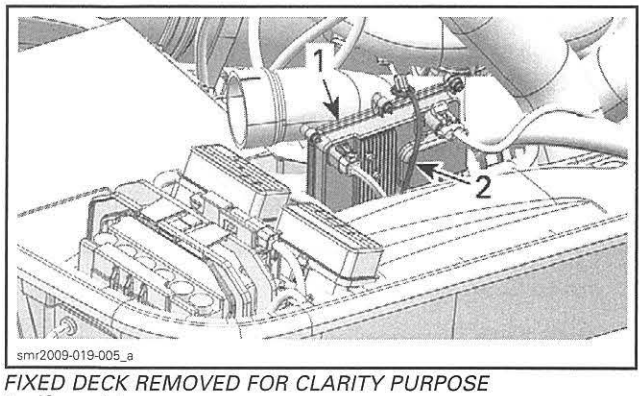

FIXED DECK REMOVED FOR CLARITY PURPOSE
1. iS module
2. Retaining latch

Cut locking ties securing wiring harnesses to iS module support and front attachment.

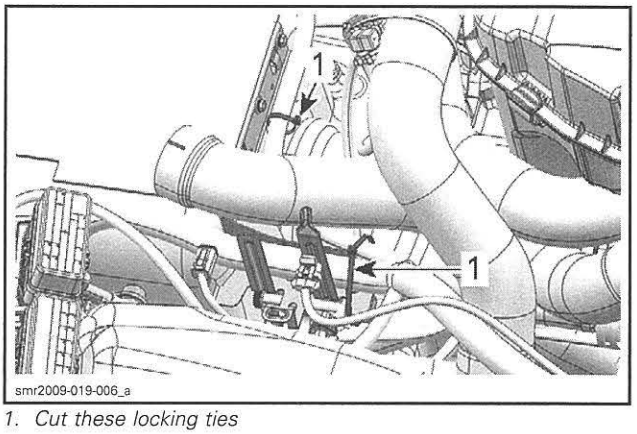

1. Cut these locking ties

Remove screws securing the front attachment to the hull.

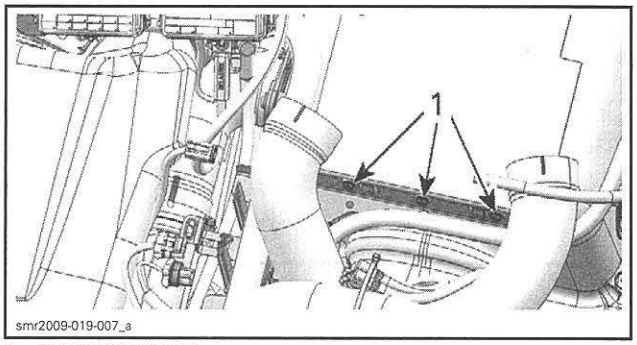

1. Retaining screws

Remove the front attachment from vehicle.

NOTE: On **iS models**, the front attachment and the iS module support are attached together with rivets.

Models Without iS Suspension

Cut locking ties securing the iBR harness.

Remove screw retaining the intercooler attachment.

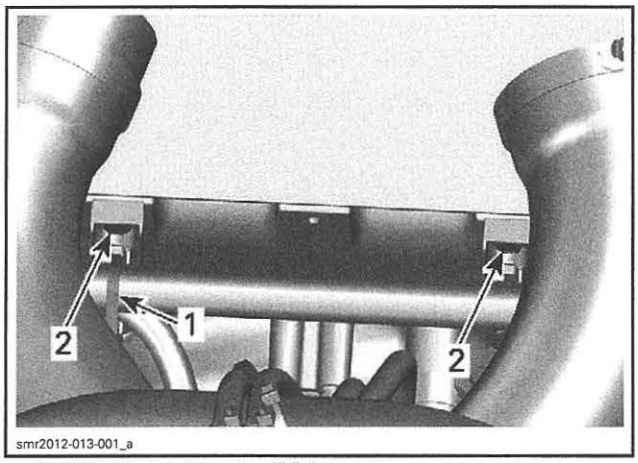

1. Locking tie retaining the iBR harness
2. Intercooler attachment retaining screw

All Models

When reinstalling, tighten front attachment screws to specification.

TIGHTENING TORQUE	
Front attachment screw	8 N•m (71 lbf•**in**)

Install all other removed parts.

Rear Attachment Replacement

Remove the intercooler, see procedure in this subsection.

Remove darts and rubber pad.

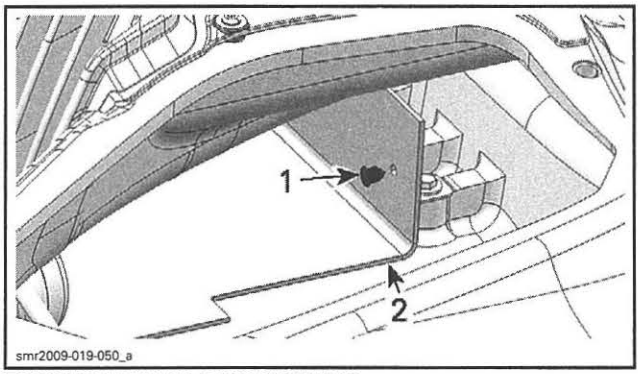

THROUGH THE LH REAR OPENING
1. Dart
2. Rubber pad

Remove and discard screw securing the attachment to the hull.

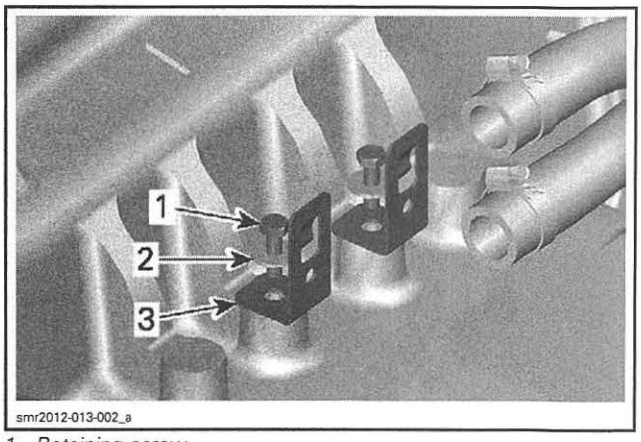

1. Retaining screw
2. Washer
3. LH rear attachment

Install a new attachment using a NEW screw.

Tighten rear attachment screw to specification.

TIGHTENING TORQUE	
Rear attachment screw	8 N•m (71 lbf•**in**)

Install all other removed parts.

EXHAUST SYSTEM

SERVICE TOOLS

Description	Part Number	Page
FLUSHING CONNECTOR ADAPTER	295 500 473	84

SERVICE PRODUCTS

Description	Part Number	Page
LOCTITE 243 (BLUE)	293 800 060	90

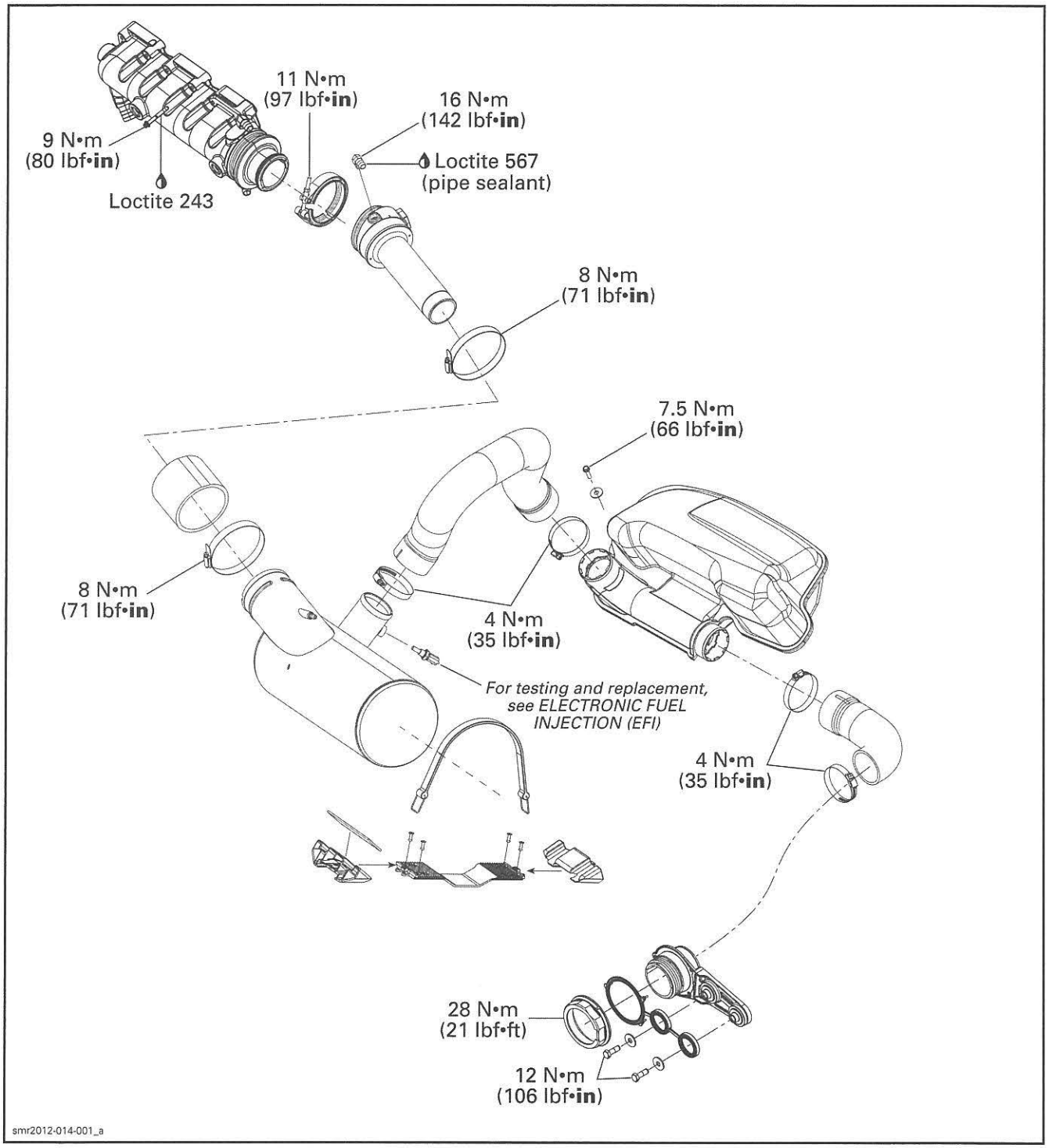
11 N•m
(97 lbf•in)
16 N•m
(142 lbf•in)
9 N•m
(80 lbf•in)
Loctite 567
(pipe sealant)
Loctite 243
8 N•m
(71 lbf•in)
7.5 N•m
(66 lbf•in)
8 N•m
(71 lbf•in)
4 N•m
(35 lbf•in)
For testing and replacement, see ELECTRONIC FUEL INJECTION (EFI)
4 N•m
(35 lbf•in)
28 N•m
(21 lbf•ft)
12 N•m
(106 lbf•in)
smr2012-014-001_a

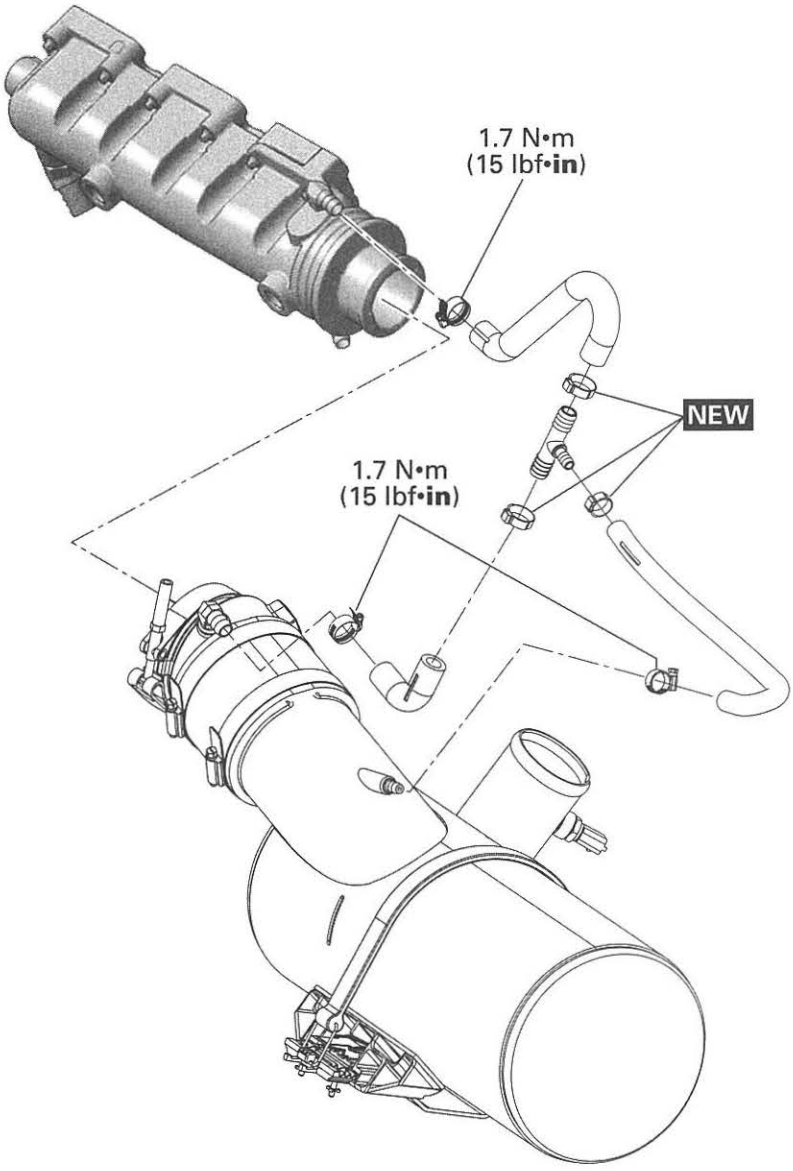

NEW = Component must be replaced when removed.

smr2011-013-100_a

RXT, GTX and WAKE PRO Series (215 and 260 Engines)

215 Engine

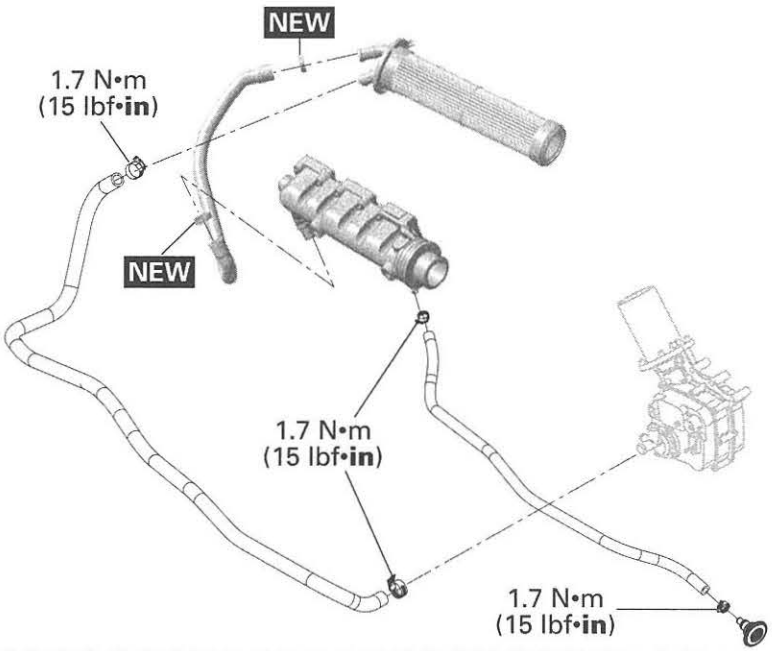

260 Engine

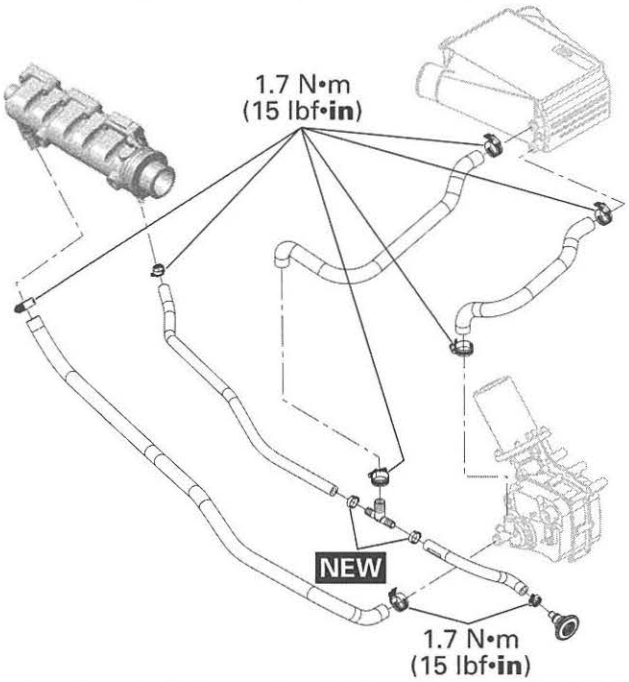

NEW = Component must be replaced when removed.

smr2011-013-002_b

GTI, GTS, GTX and WAKE Series (130 and 155 Engines)

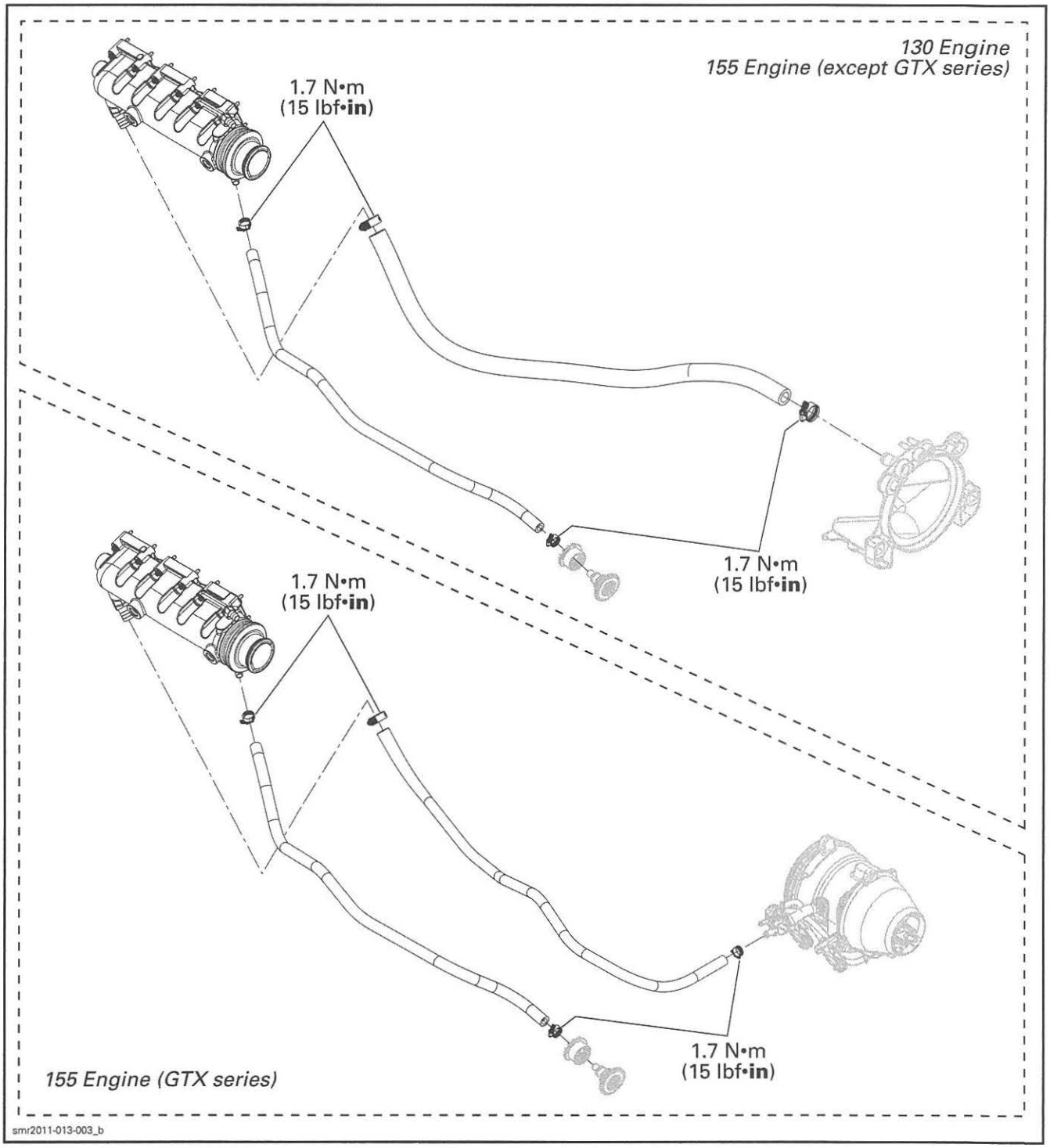

GTR and RXP-X Series

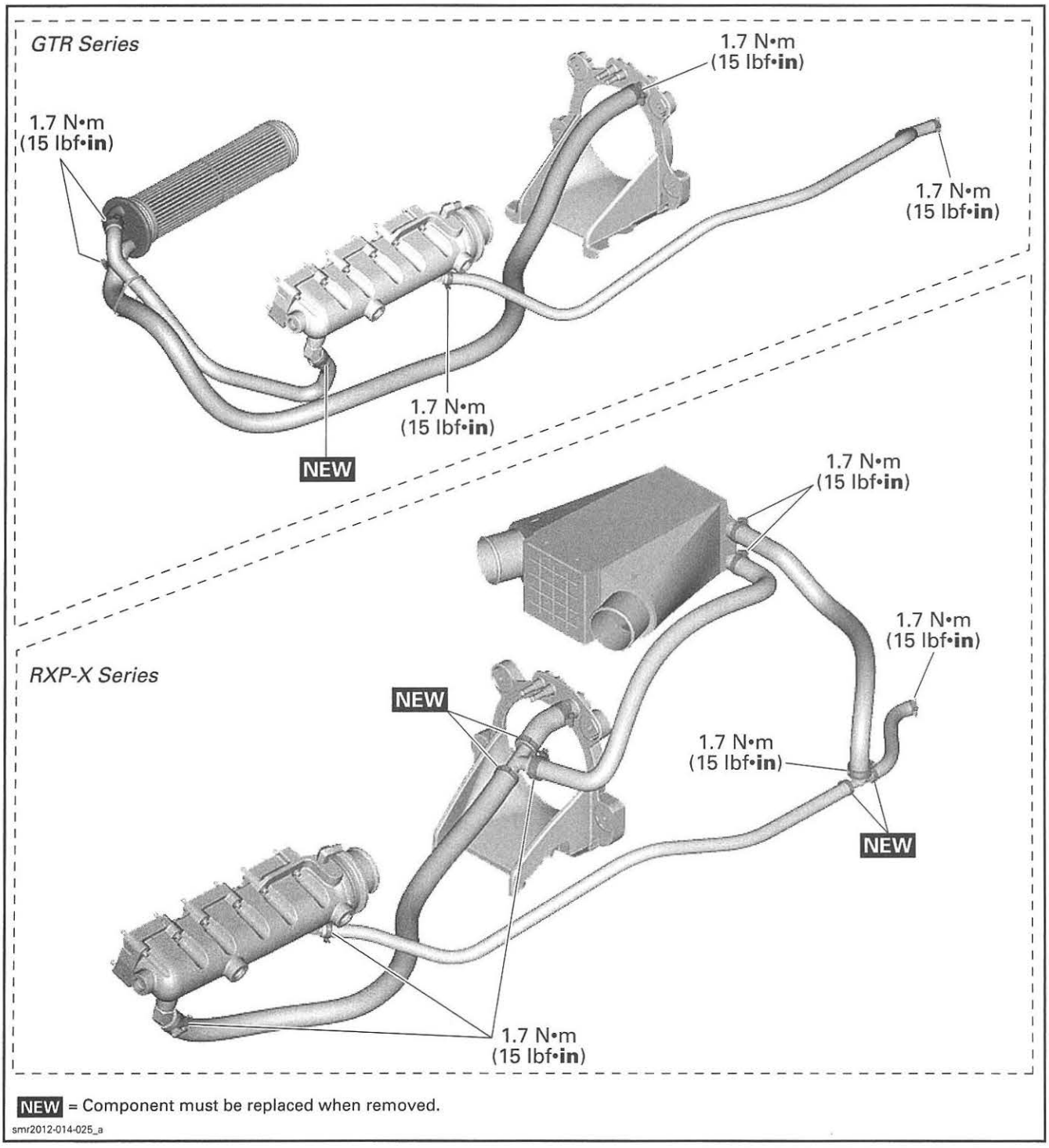

NEW = Component must be replaced when removed.

smr2012-014-025_a

GENERAL

SYSTEM DESCRIPTION

The exhaust system is cooled by water provided by a pressurized area in the jet pump (open loop system).

The same water is also used to cool the intercooler (supercharged engines) and the iBR actuator (models with iBR).

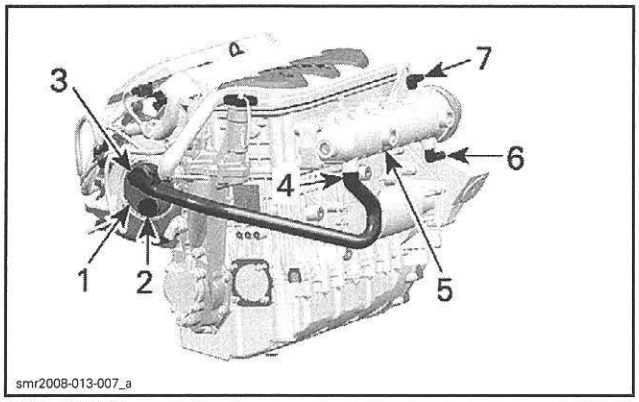

215 ENGINE
1. *Intercooler*
2. *Intercooler water inlet*
3. *Intercooler water outlet*
4. *Exhaust manifold water inlet*
5. *Exhaust manifold*
6. *Exhaust manifold water outlet (to pump support)*
7. *Exhaust manifold water outlet (to exhaust pipe and muffler)*

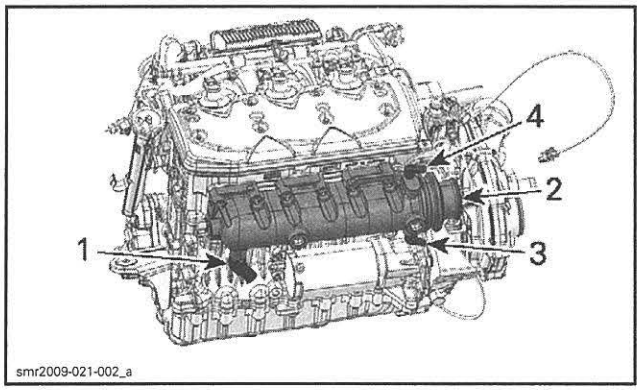

130, 155 AND 260 ENGINES
1. *Exhaust manifold water inlet*
2. *Exhaust manifold*
3. *Exhaust manifold water outlet (to pump support)*
4. *Exhaust manifold water outlet (to exhaust pipe and muffler)*

Water from the exhaust manifold jacket is directed to the exhaust pipe via 2 hoses.

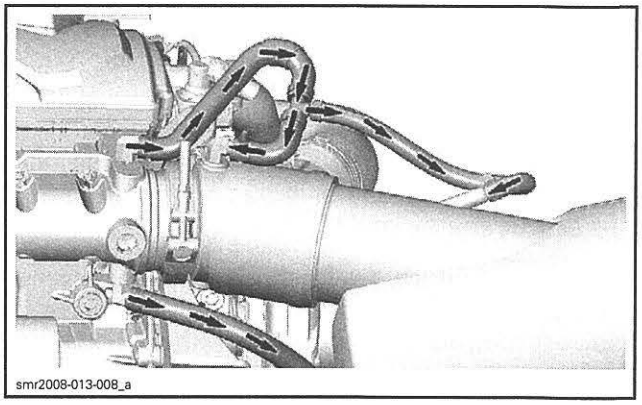

Water exits exhaust pipe water jacket through holes to inject water in muffler and resonator.

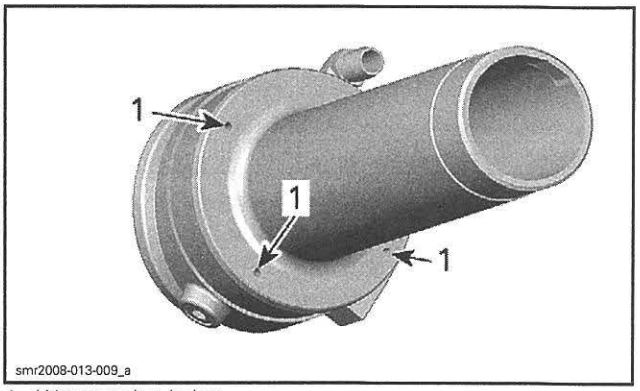

1. *Water packet holes*

Water is evacuated through the exhaust outlet in transom area.

Exhaust System Technical Specifications

TYPE	Total Loss Cooling System (TLCS)
WATER FLOW	Flow from jet pump (no water pump)
TEMPERATURE CONTROL	Calibrated outlet fittings (no thermostat)
SYSTEM BLEEDING	Self-bleed type
SYSTEM DRAINING	Self-drain type

MAINTENANCE

EXHAUST SYSTEM FLUSHING

Flushing the exhaust system with fresh water is essential to neutralize corroding effects of salt or other chemical products present in water. It will

help to clean up sand, salt, shells or other particles in water jackets (exhaust system, intercooler (**supercharged engines**) and hoses).

Exhaust system flushing should be performed when the watercraft is not expected to be used further the same day or when the watercraft is stored for any extended time.

NOTICE **Failure to flush the system, when necessary, will severely damage intercooler (supercharged engines) and exhaust system. Make sure engine operates during entire procedure.**

⚠ WARNING

Perform these operations in a well ventilated area. Certain components in the engine compartment may be very hot. Direct contact may result in skin burn. Do not touch any electrical part or jet pump area when engine is running.

⚠ WARNING

When operating the engine while the watercraft is out of the water, the heat exchanger in the ride plate may become very hot. Avoid any contact with ride plate as burns may occur.

Connect a garden hose to connector located at the rear of watercraft. Do not open water tap yet.

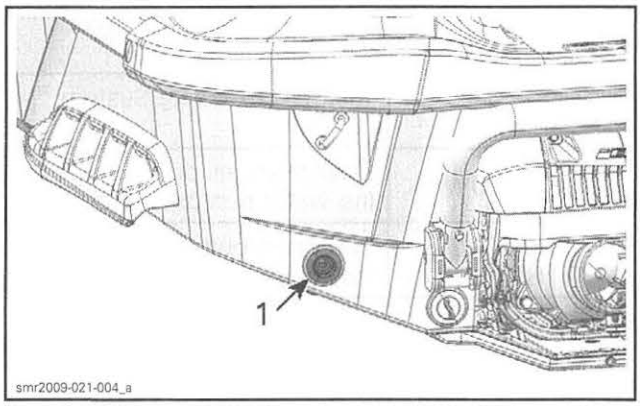

1. Water inlet connector

NOTE: The following tool is recommended when a quick connect adapter is used to ease garden hose installation.

RECOMMENDED TOOL	
FLUSHING CONNECTOR ADAPTER (P/N 295 500 473)	

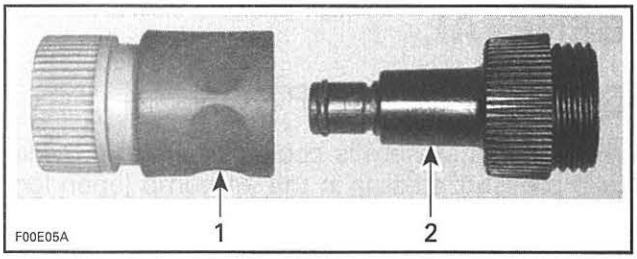

1. Quick connect adapter
2. Flushing connector adapter

To flush the exhaust system, start the engine then immediately open the water tap.

NOTICE **Always start the engine before opening the water tap. Open water tap immediately after engine is started to prevent overheating. Never run engine without supplying water to the exhaust system when watercraft is out of water.**

Run the engine about 20 seconds at a fast idle between 4000 - 5000 RPM.

NOTICE **Never run engine longer than 2 minutes. Drive line seal has no cooling when watercraft is out of water.**

Ensure water flows out of jet pump while flushing.

Close the water tap, then stop the engine.

NOTICE **Always close the water tap before stopping the engine.**

Disconnect the garden hose.

NOTICE **Remove flushing connector adapter after operation (if used).**

PROCEDURES

MUFFLER

⚠ CAUTION **Certain components in the engine compartment may be very hot. Let exhaust system cool down prior to removing parts.**

Muffler Access

Models with Suspension

Open seat.

Remove moving deck and deck extension. Refer to *BODY (RXT, GTX AND WAKE PRO SERIES)* subsection.

Remove the air intake silencer. Refer to *AIR INTAKE SILENCER (MODELS WITH SUSPENSION)* subsection.

Models Without Suspension

Remove or open seat.

Muffler Removal

1. Cut locking tie securing water outlet hose (exhaust system) and blow-by hose.
2. Disconnect the water outlet hose from the exhaust manifold.
3. Gently disconnect the hose from blow-by valve.

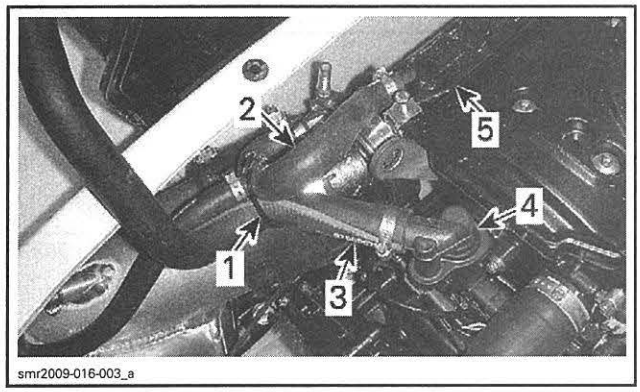

smr2009-016-003_a

TYPICAL
1. *Cut this locking tie*
2. *Water outlet hose (exhaust system)*
3. *Blow-by hose*
4. *Blow-by valve*
5. *Exhaust manifold*

4. Unscrew exhaust clamp.

NOTICE **Do not use pneumatic or electrical tools as seizure may occur.**

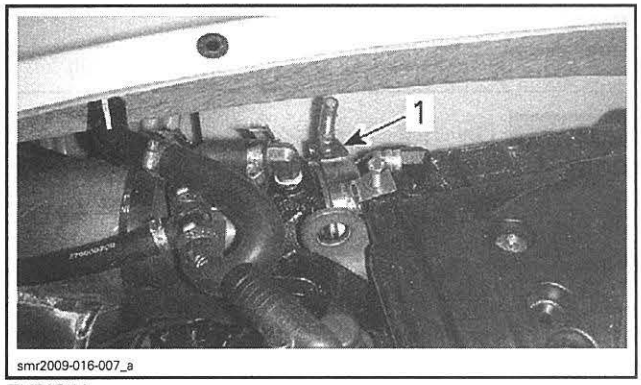

smr2009-016-007_a

TYPICAL
1. *Exhaust clamp*

5. Unplug the exhaust gas temperature sensor (EGTS).

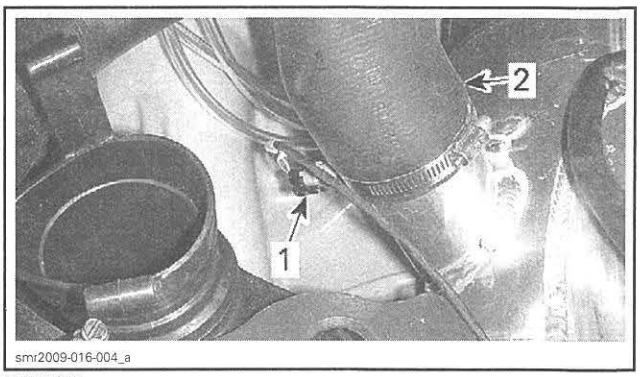

smr2009-016-004_a

TYPICAL
1. *EGTS sensor*
2. *Exhaust hose*

6. Disconnect the exhaust hose from muffler.

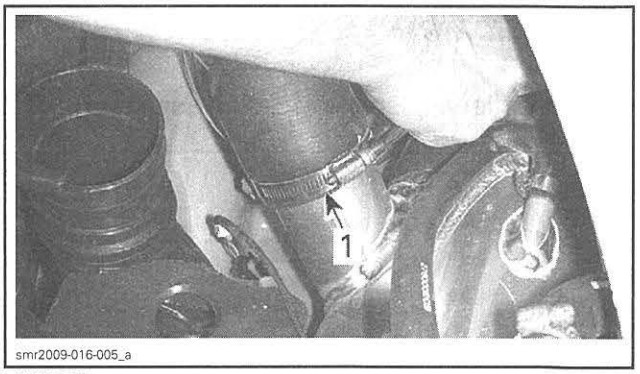

smr2009-016-005_a

TYPICAL
1. *Exhaust hose clamp*

7. Detach retaining strap.

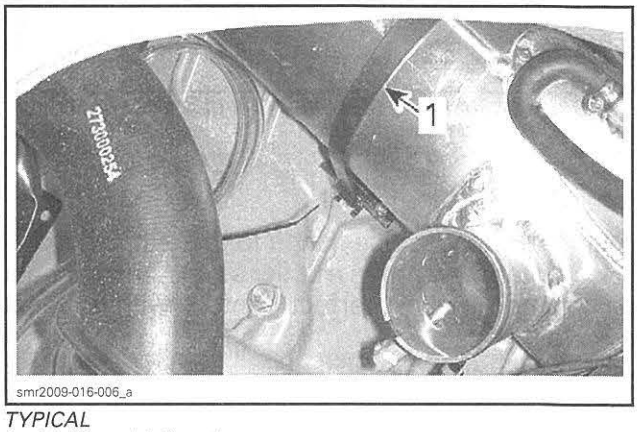

smr2009-016-006_a

TYPICAL
1. *Muffler retaining strap*

8. Remove the muffler.
   - On **models with suspension**, remove the LH rear storage basket then move the muffler backwards and slide it through the rear opening.
   - On **models without suspension**, move the muffler back then slide it forward through the deck opening.

Muffler Inspection

Check muffler for:
- Cracks
- Corrosion
- Other damages.

Check if exhaust hose is:
- Brittle
- Hard
- Cracked
- Otherwise damaged.

Replace any defective part.

Muffler Installation

With a new muffler, install the EGTS sensor. Refer to *ELECTRONIC FUEL INJECTION (EFI)* subsection.

Open muffler adjusters by sliding adjuster blocks.

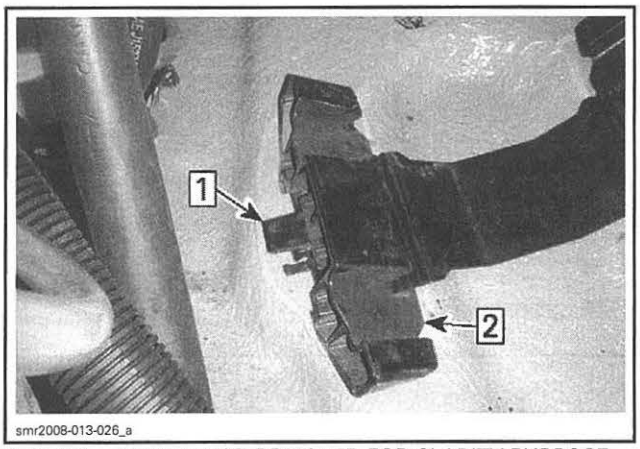

TYPICAL – RUBBER PAD REMOVED FOR CLARITY PURPOSE
Step 1: Lift adjuster tab
Step 2: Move adjuster outward

Insert the muffler in hull.

Align the exhaust pipe flange to the exhaust manifold. Rotate and move muffler so that the exhaust pipe flange makes perfect contact with exhaust manifold.

Slide both adjuster blocks against muffler to support it in position.

NOTE: Ensure muffler is in contact with both adjuster blocks. Readjust as required.

Install exhaust clamp with the nut upward.

Tighten clamp loosely.

Using a spacer, position the exhaust pipe.

REQUIRED SPACER	
RXP-X Series	32 mm (1-1/4 in)
All other models	50 mm (2 in)

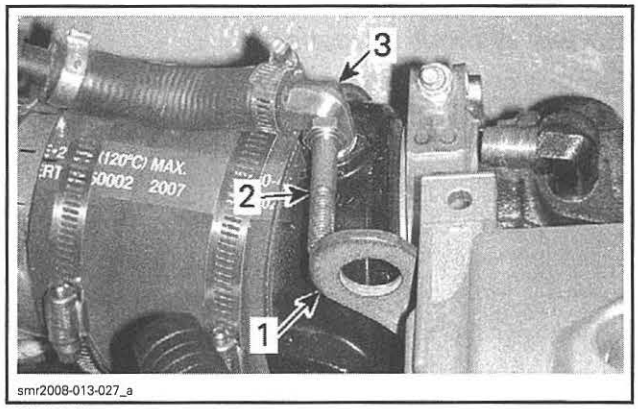

TYPICAL
1. *Engine lifting ring*
2. *Spacer (in this case a bolt)*
3. *Exhaust pipe fitting*

Confirm that the exhaust pipe mark is aligned with the mark on the exhaust manifold.

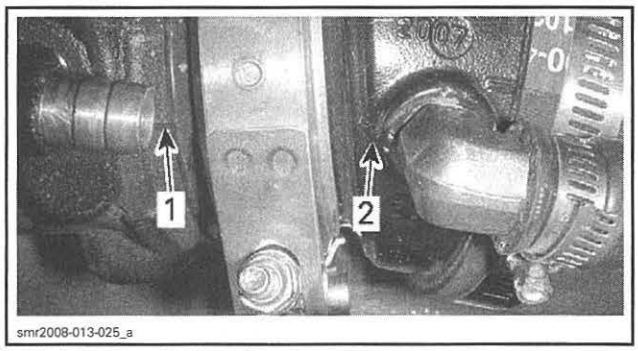

1. *Exhaust manifold mark*
2. *Exhaust pipe mark*

Tighten exhaust clamp to specification.

TIGHTENING TORQUE	
Exhaust clamp	11 N•m (97 lbf•**in**)

NOTICE **Do not use pneumatic or electric tools as seizure may occur.**

Install the muffler strap.

NOTICE **Ensure not to rotate muffler during strap installation. The use of a soapy water solution on inner side of muffler strap is recommended.**

Install all other removed parts.

After installation, ensure there is no water or exhaust gas leak when engine is running.

Test run the engine while supplying water to the exhaust system.

NOTICE **Never run engine without supplying water to the exhaust system when watercraft is out of water.**

EXHAUST HOSES

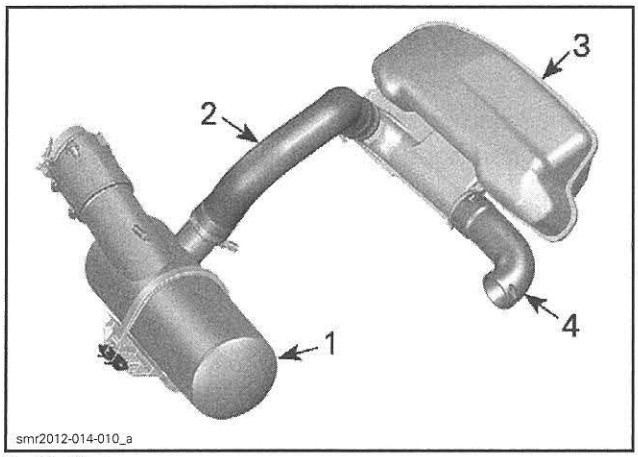

1. *Muffler*
2. *Front exhaust hose*
3. *Resonator*
4. *Rear exhaust hose*

Front Exhaust Hose Replacement

Models with Suspension

Remove the LH rear storage basket.

Remove the deck extension. Refer to *BODY* subsection.

Models Without Suspension

Remove seat.

On **RXP-X models**, remove the rear handle.

All Models

Cut all locking ties from exhaust hose.

Remove exhaust hose from the muffler outlet and resonator.

Remove front exhaust hose from vehicle.

When reinstalling exhaust hose, make sure to attach elbow fittings at the highest position that you can on the exhaust hose.

Replace all locking ties previously cut.

Tighten retaining clamps to specification.

TIGHTENING TORQUE	
Front exhaust hose clamp	4 N•m (35 lbf•**in**)

Install all other removed parts.

After installation, ensure there is no water or exhaust gas leak when the engine is running. Test run the engine while supplying water to the exhaust system.

NOTICE **Never run engine without supplying water to the exhaust system when watercraft is out of water.**

Rear Exhaust Hose Replacement

Models with Suspension

Remove battery and battery holder. Refer to *CHARGING SYSTEM* subsection.

Loosen clamps securing rear exhaust hose to resonator and RH fixation plate.

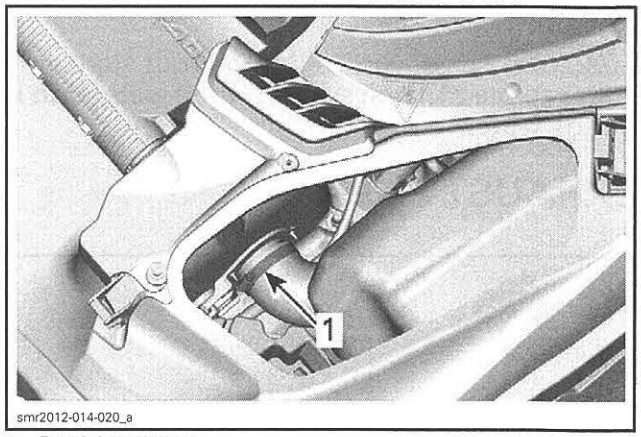

1. *Retaining clamps*

Remove the rear exhaust hose from vehicle.

Models Without Suspension

Remove the resonator. See procedure in this subsection.

Loosen clamp securing the rear exhaust hose to RH fixing plate.

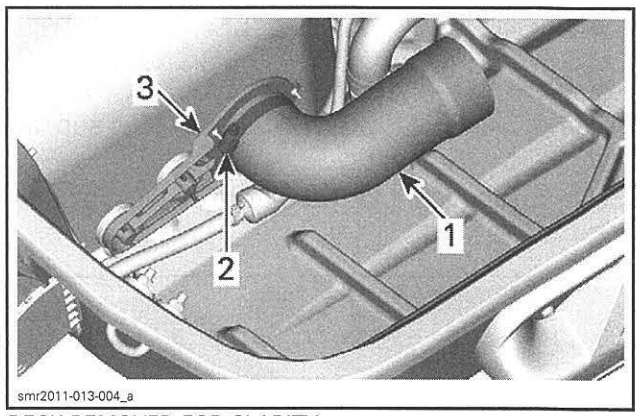

DECK REMOVED FOR CLARITY
1. *Rear exhaust hose*
2. *Hose clamp*
3. *RH fixing plate*

All Models

When reinstalling rear exhaust hose, tighten clamps to specification.

TIGHTENING TORQUE	
Rear exhaust hose clamp	4 N•m (35 lbf•**in**)

Reinstall all other removed parts.

After installation, ensure there is no water or exhaust gas leak when the engine is running. Test run the engine while supplying water to the exhaust system.

NOTICE **Never run engine without supplying water to the exhaust system when watercraft is out of water.**

EXHAUST PIPE

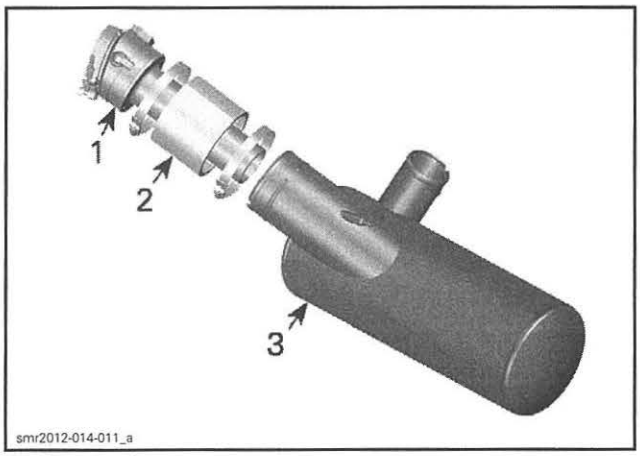

1. Exhaust pipe
2. Rubber adapter
3. Muffler

Exhaust Pipe Removal

Remove *MUFFLER*, see procedure in this subsection.

Disconnect water inlet hose from exhaust pipe fitting.

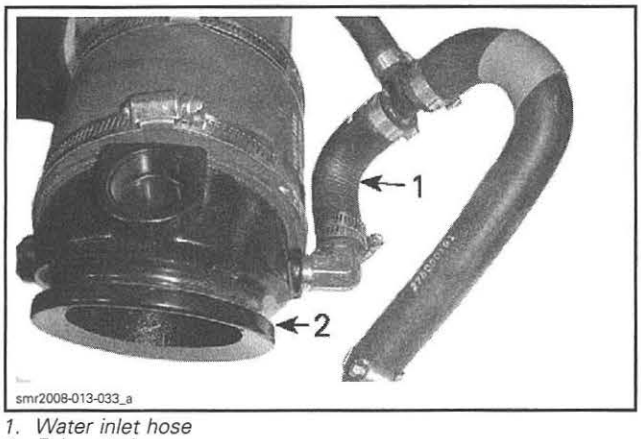

1. Water inlet hose
2. Exhaust pipe

Loosen rubber adapter clamps.

Remove exhaust pipe and the rubber adapter.

Exhaust Pipe Inspection

Inspect exhaust pipe for:
- Cracks
- Flange damages
- Other damages.

Replace exhaust pipe as required.

Check if the rubber adapter is:
- Brittle
- Hard
- Otherwise damaged.

Replace rubber adapter if necessary.

Exhaust Pipe Installation

Trace a mark to locate the middle of the muffler bulge opening.

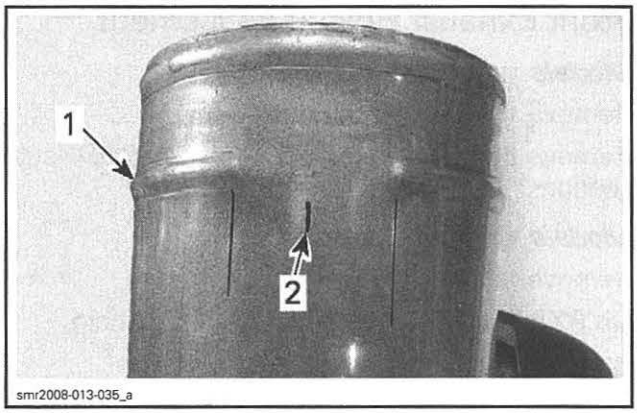

1. Bulge
2. Middle of the opening

Install the rubber adapter on exhaust pipe. Ensure rubber adapter is properly seats against exhaust pipe shoulder.

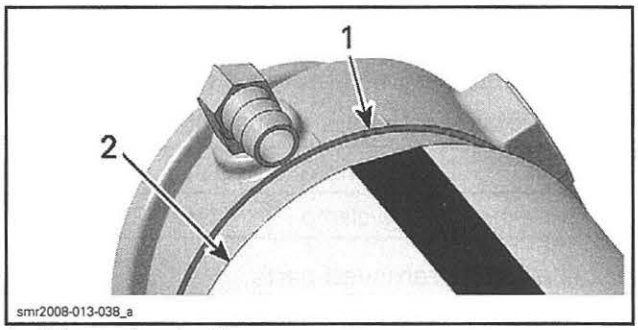

1. Exhaust pipe shoulder
2. Rubber adapter

Center the rubber adapter strip of the rubber adapter between both exhaust pipe marks.

Tighten retaining clamp.

TIGHTENING TORQUE	
Rubber adapter retaining clamp	8 N•m (71 lbf•**in**)

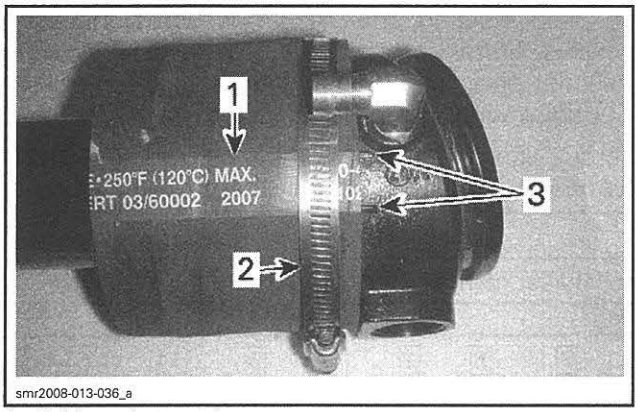

1. *Rubber adapter strip*
2. *Retaining clamp*
3. *Exhaust pipe marks*

Slide the other clamp on the rubber adapter.

Insert the exhaust pipe into the muffler.

Align the center of the rubber adapter strip with the mark previously traced on muffler.

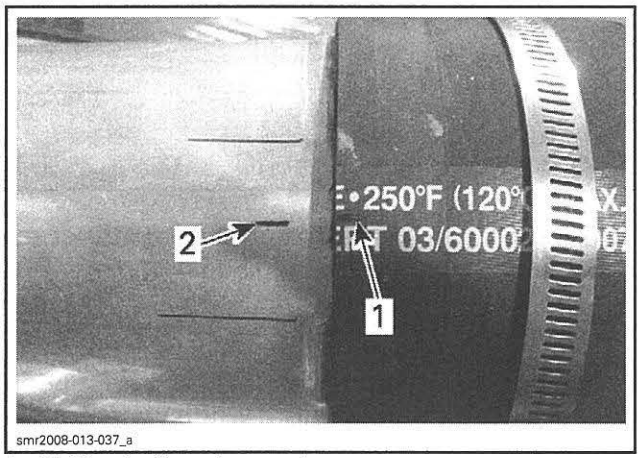

1. *Middle of rubber adapter strip*
2. *Center of the muffler bulge opening*

Using a caliper, measure the distance between the exhaust pipe shoulder and the outside of the muffler bulge.

Position the muffler to 95 mm ± 2 mm (3.74 in ± .079 in). Check the distance in several places.

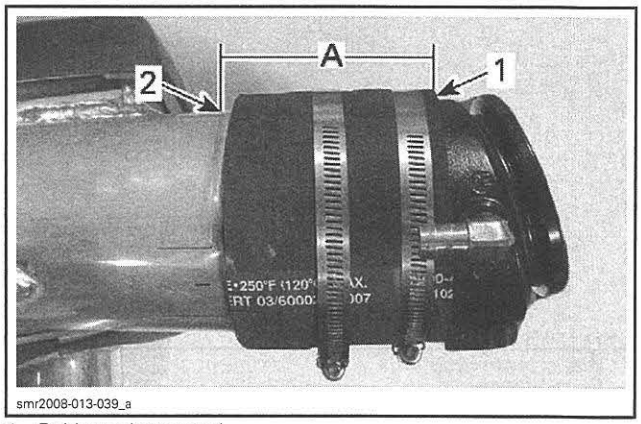

1. *Rubber adapter end*
2. *Outside of the muffler bulge*

A. 95 mm ± 2 mm (3.74 in ± .079 in)

Tighten retaining clamp.

TIGHTENING TORQUE	
Rubber adapter retaining clamp	8 N•m (71 lbf•**in**)

Install muffler in vehicle. Refer to *MUFFLER INSTALLATION* in this subsection for complete procedure.

EXHAUST MANIFOLD

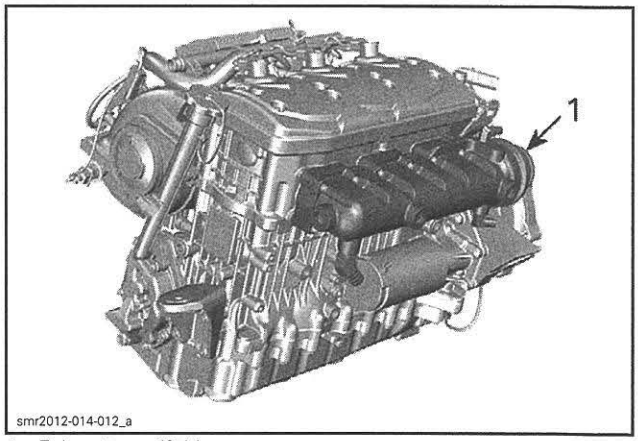

1. *Exhaust manifold*

Exhaust Manifold Removal

1. On **models with suspension**, remove the moving deck and the deck extension. Refer to *BODY* subsection.
2. Move muffler rearwards to make room. Refer to *MUFFLER REMOVAL* in this subsection to know how separate muffler from exhaust manifold.
3. Disconnect the exhaust manifold water outlet hose.

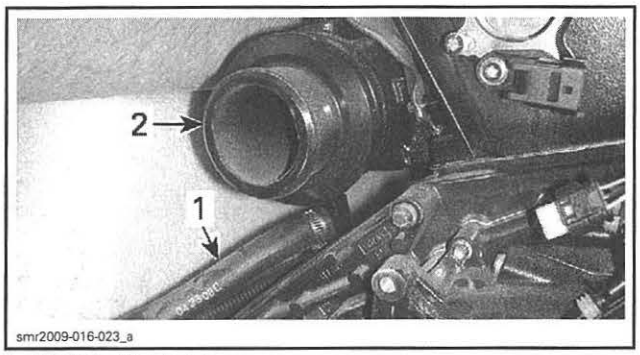

1. Water outlet hose
2. Exhaust manifold

4. Disconnect exhaust manifold water inlet hose from exhaust manifold.

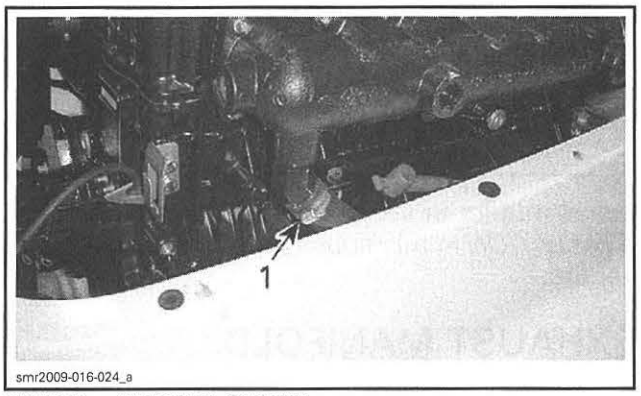

TYPICAL – iS MODEL SHOWN
1. Exhaust manifold water inlet hose

5. Unscrew the exhaust manifold beginning with the bottom screws. This will help holding the manifold while you remove the screws.
6. Remove the exhaust manifold from vehicle.
   - On **models with suspension**, move the exhaust manifold rearwards to remove it.
   - On **models without suspension**, lift up the exhaust manifold to remove it.

Exhaust Manifold Inspection

Inspect exhaust manifold condition paying attention for cracks or other damage. Check contact surfaces and hose. Replace any defective part.

Inspect plane surfaces for warpage. Small deformation can be corrected by grinding surface with a fine sand paper. Install sand paper on a surface plate and rub part against oiled sand paper.

Clean all metal components in a solvent.

Exhaust Manifold Installation

Installation is essentially the reverse of removal procedures. However, pay particular attention to the following.

NOTE: There is no gasket between cylinder block and exhaust manifold.

Apply LOCTITE 243 (BLUE) (P/N 293 800 060) on threads of screws.

To help holding the manifold while installing screws, first insert the exhaust manifold into the exhaust pipe then, install the upper front screw. Continue with the remaining screws.

Torque screws to specification as per following illustrated sequence. Repeat the procedure twice.

TIGHTENING TORQUE	
Exhaust manifold screws	9 N•m (80 lbf•**in**)

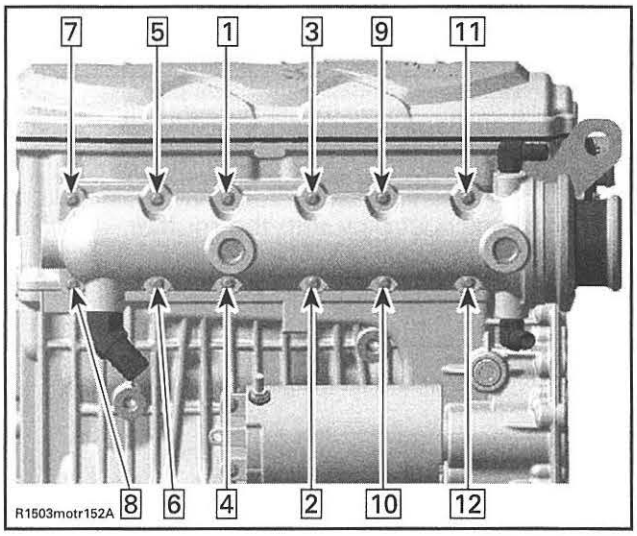

After installation, ensure there is no water or exhaust gas leak when the engine is running. Test run the engine while supplying water to the flushing connector.

NOTICE Never run engine without supplying water to the exhaust system when watercraft is out of water.

RESONATOR

Resonator Removal

Models with Suspension

1. Remove engine from vehicle. Refer to *ENGINE REMOVAL AND INSTALLATION* subsection.
2. Remove battery and battery holder. Refer to *CHARGING SYSTEM* subsection.
3. Loosen clamp securing rear exhaust hose to resonator.
4. Remove the screw securing the front of the resonator.

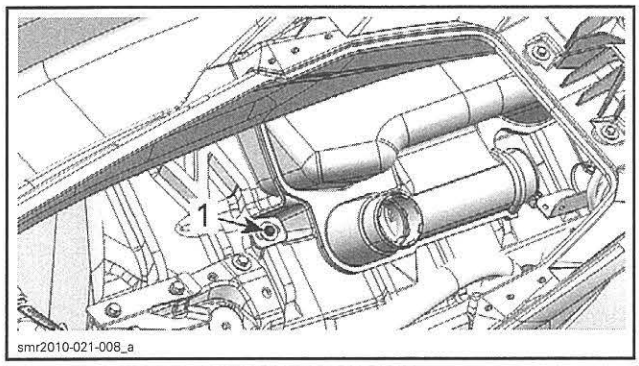

TYPICAL – MODEL WITHOUT iS SHOWN
1. Resonator retaining screw

5. Remove the front exhaust hose from resonator.
6. Remove resonator from vehicle.

Models Without Suspension

1. Remove seat.
2. On RXP-X models, remove the rear handle.
3. Detach the front exhaust hose from the resonator.
4. Remove screw and washer securing the front of the resonator.

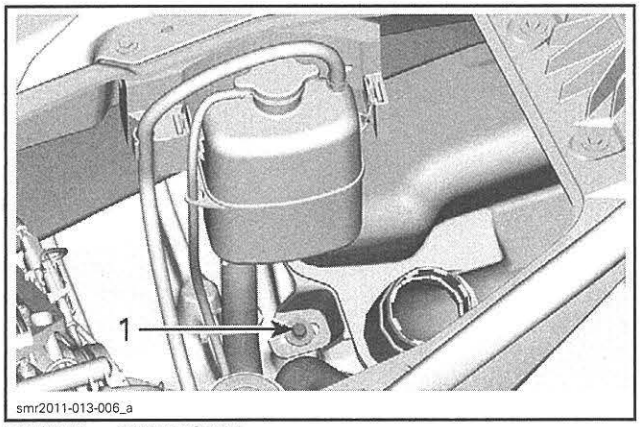

TYPICAL – GTI SHOWN
1. Resonator retaining screw

5. Loosen clamp securing the rear exhaust hose to resonator.

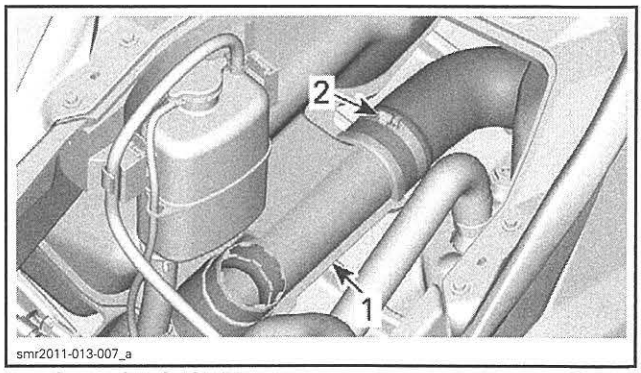

TYPICAL – GTI SHOWN
1. Resonator
2. Loosen this clamp

6. Slide resonator by the deck opening.

Resonator Inspection

Inspect parts condition paying attention for deformation, cracks or other damage. Check hoses. Replace any defective part.

Resonator Installation

Installation is the reverse of the removal procedures. However, pay attention to the following.

TIGHTENING TORQUE	
Resonator retaining screw	7.5 N•m (66 lbf•**in**)

After installation, ensure there is no water or exhaust gas leak when the engine is running. Test run the engine while supplying water to the exhaust system.

NOTICE **Never run engine without supplying water to the exhaust system when watercraft is out of water.**

PTO HOUSING AND MAGNETO

SERVICE TOOLS

Description	Part Number	Page
3-PIN MAGNETO HARNESS ADAPTER	529 036 016	101–102
BLIND HOLE BEARING PULLER SET	529 036 117	101
HANDLE	420 877 650	101
IMPELLER REMOVER/INSTALLER	529 035 820	100
OETIKER PLIERS	295 000 070	99
STARTER DRIVE SEAL PUSHER	420 876 502	101
SUCTION PUMP	529 035 880	95

SERVICE PRODUCTS

Description	Part Number	Page
ISOFLEX GREASE TOPAS NB 52	293 550 021	101, 106
LOCTITE 243 (BLUE)	293 800 060	98, 103
LOCTITE 648 (GREEN)	413 711 400	100
PULLEY FLANGE CLEANER	413 711 809	96, 99

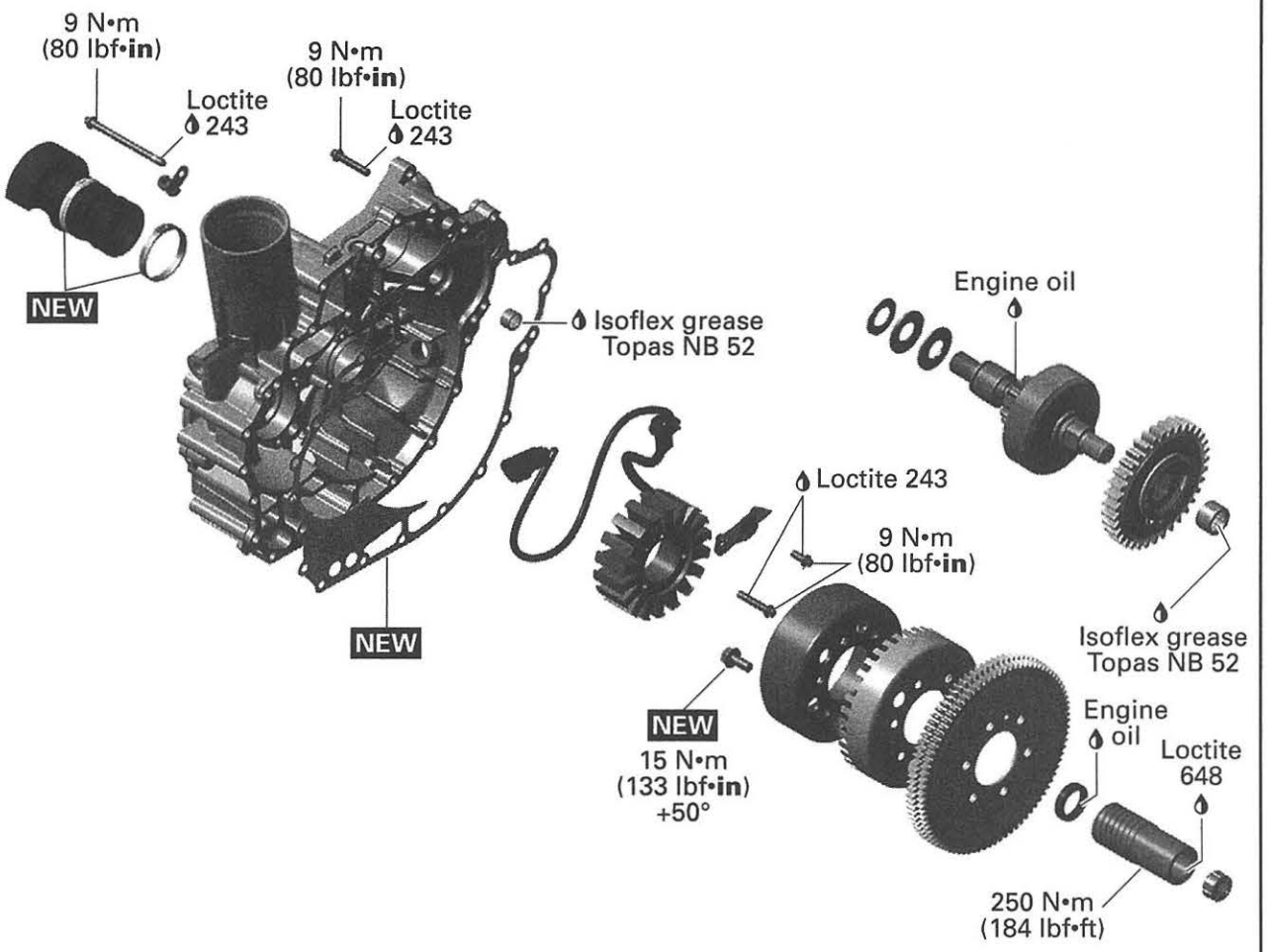

NEW = Component must be replaced when removed.

smr2010-022-001_b

GENERAL

NOTE: It is good practice to check for fault codes using the B.U.D.S. software as a first troubleshooting step. Refer to the *DIAGNOSTIC AND FAULT CODES* subsection.

Always carry out electrical tests on components before removing or installing them.

PROCEDURES

PTO HOUSING

PTO Housing Access

Models with Suspension

Remove the moving deck and the deck extension. Refer to *BODY* subsection.

Remove the air intake silencer. Refer to appropriate *AIR INTAKE SYSTEM* subsection.

RXP-X Models

Remove seat and rear handle.

215 and 260 Engines

Remove the supercharger. Refer to *SUPERCHARGER* subsection.

All Models

Drain the engine oil. Refer to *LUBRICATION SYSTEM* subsection.

Drain engine coolant, refer to the *COOLING SYSTEM* subsection.

Refer to *STEERING AND PROPULSION* and remove the following:

- Jet pump
- Drive shaft
- Drive shaft bellows.

PTO Housing Removal

1. Disconnect the battery. Refer to *STARTING SYSTEM* subsection.
2. Remove the cylinder head cover. Refer to *CYLINDER HEAD* subsection.
3. Insert the tube of the suction pump in the lower area of the timing chain and syphon remaining oil out of the lower timing chain case.

REQUIRED TOOL	
SUCTION PUMP (P/N 529 035 880)	

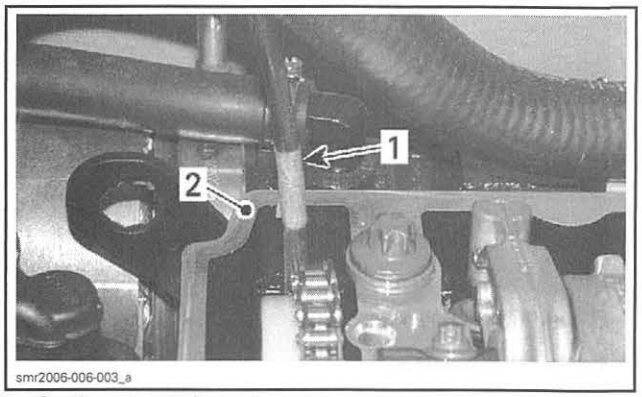

1. *Suction pump tube*
2. *Edge of cylinder block*

4. Disconnect at throttle body the air intake hose.
5. Move muffler rearwards. Refer to *EXHAUST SYSTEM* subsection.
6. Disconnect CPS connector from wiring harness.

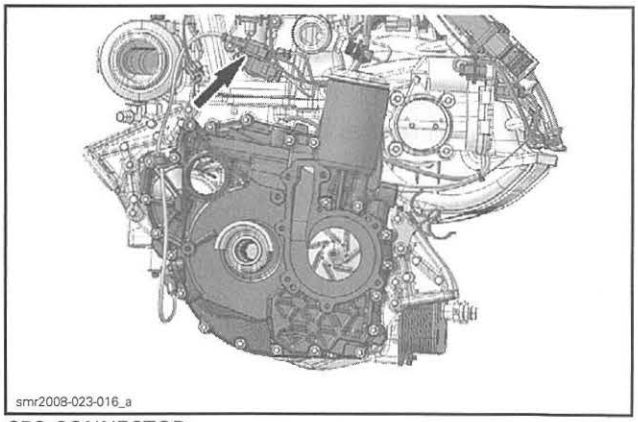

CPS CONNECTOR

7. Disconnect the magneto connector, located beside the ECM.

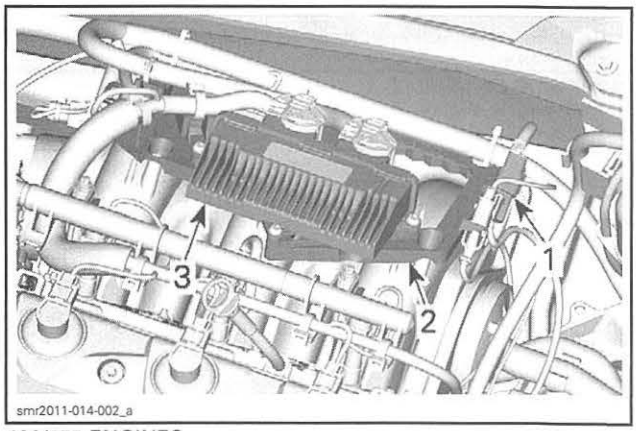

130/155 ENGINES
1. *Magneto connector*
2. *ECM support*
3. *ECM*

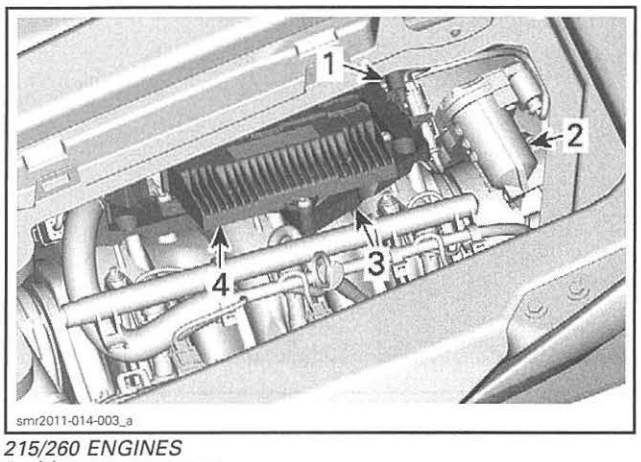

215/260 ENGINES
1. *Magneto connector*
2. *Throttle body*
3. *ECM support*
4. *ECM*

8. Place rags under PTO housing to prevent oil spillage.

NOTE: Up to 250 ml (8 U.S. oz) of oil could flow out when removing PTO housing. If spillage occurs, clean immediately with the PULLEY FLANGE CLEANER (P/N 413 711 809) to prevent oil stains.

9. Remove both rear engine support screws.

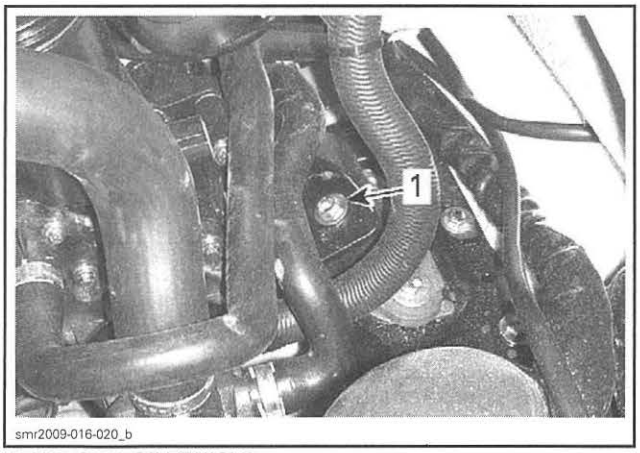

RIGHT SIDE OF VEHICLE
1. *Rear engine support screw*

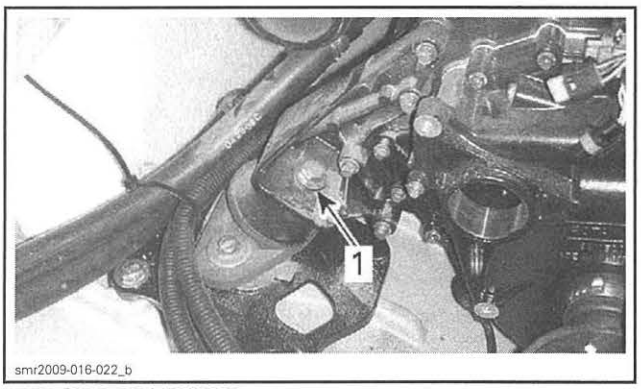

LEFT SIDE OF VEHICLE
1. *Rear engine support screw*

10. Slightly lift aft end of engine and insert a safely block under the engine to secure it in this position.
11. Remove LH rear engine support.

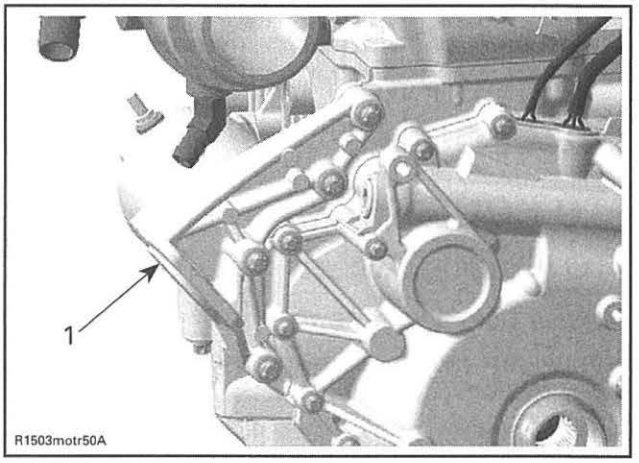

TYPICAL
1. *Engine support*

12. Remove water pump housing, refer to *COOLING SYSTEM* subsection.

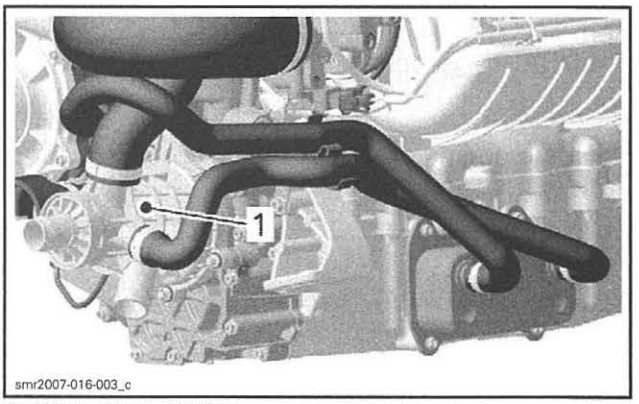

1. *Water pump housing*

13. Remove PTO housing retaining screws.

NOTE: Note position of the CPS harness retaining clamp position as illustrated for reinstallation.

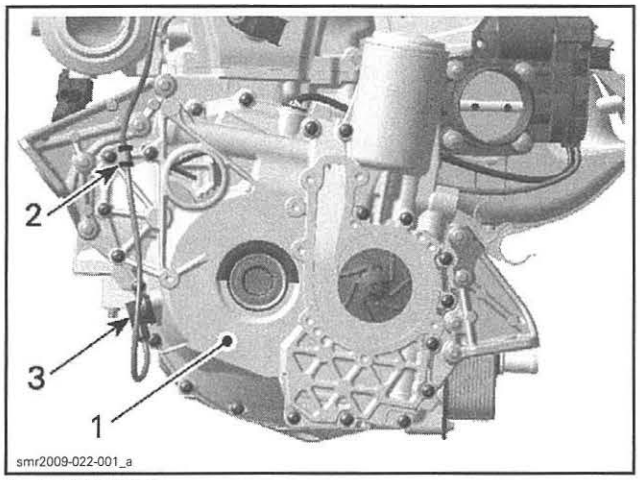

1. *PTO housing*
2. *CPS harness retaining clamp*
3. *CPS*

14. Remove PTO housing from engine.

NOTICE To prevent damaging contact surfaces, be sure to use prying lugs to separate PTO housing from engine.

NOTE: Carefully separate PTO housing from engine using two flat screwdrivers prying equally on opposite sides of the housing and at the same time. Proceed slowly to prevent starter drive disc springs and thrust washer from falling down into bilge area.

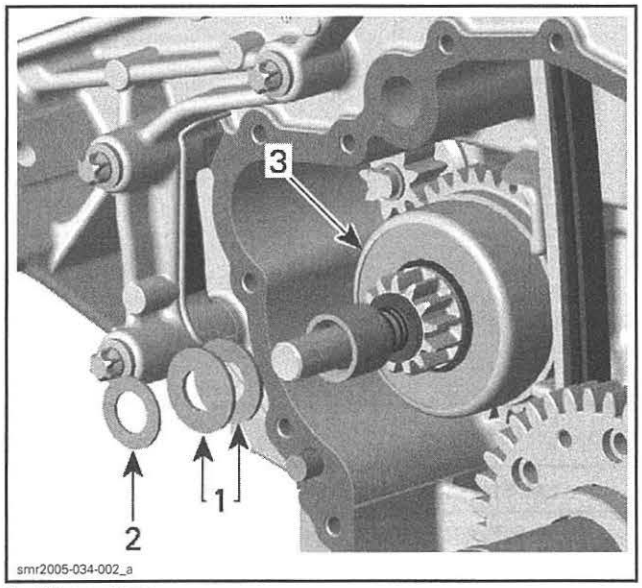

1. *Disc springs*
2. *Thrust washer*
3. *Starter drive*

15. Remove PTO housing gasket and discard it.

PTO Housing Inspection

Inspect PTO housing for cracks or any other damages. Replace if necessary.

Inspect the needle bearing in the PTO housing used to support the starter drive shaft.

NOTE: Clean all disassembled metal components in a non-ferrous metal cleaner.

Inspect oil strainer for contaminants, debris or other particles. Clean as required.

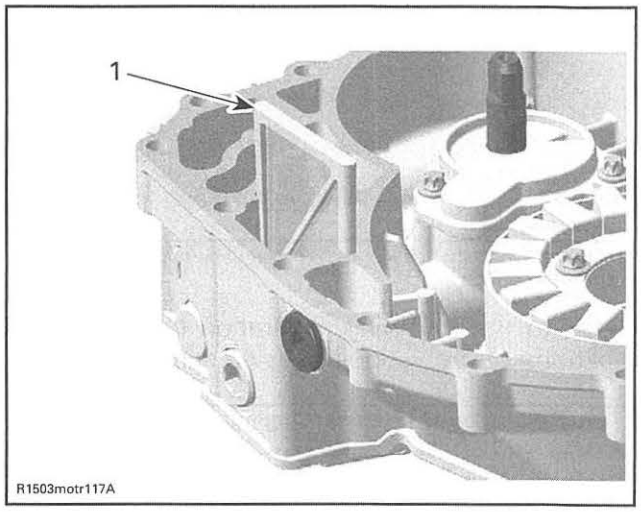

1. *PTO oil strainer*

PTO Housing Installation

For installation, reverse the removal procedure. However, pay attention to the following.

Apply lubricants, sealers or threadlocker as specified in exploded view.

Apply torques as specified in exploded view.

Install starter drive, see *STARTER DRIVE INSTALLATION* further in this subsection.

Install a **NEW** PTO housing gasket.

NOTE: When installing the PTO housing, you will need to rotate the oil/water pump shaft slightly to align it with the balance shaft for proper insertion.

NOTICE Pay particular attention to the PTO housing gasket alignment to ensure that it does not get pinched, or slide out of its surface contact area. Never force housing when installing it. If there is a strong resistance, remove housing and check oil/water pump shaft alignment and starter drive gear alignment.

NOTICE Ensure the starter drive shaft is well aligned when engaging it in the PTO housing needle bearing.

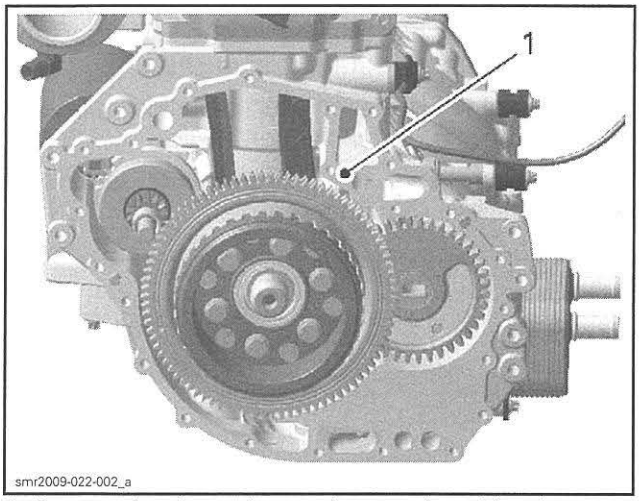

1. Pay attention that gasket remains properly positioned on this surface

Refer to the following illustration to identify the locations of the various housing screws.

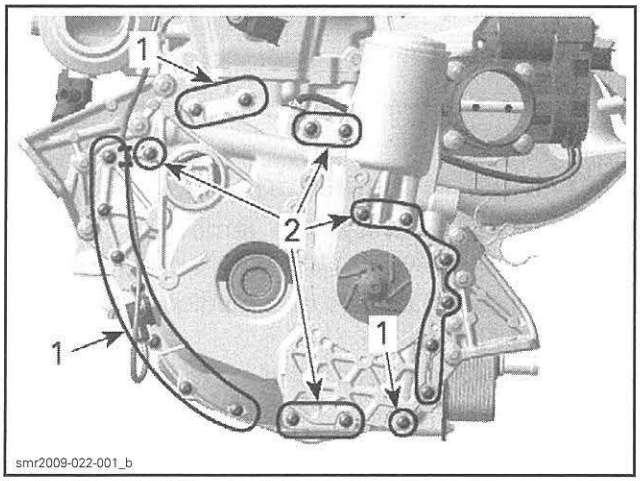

1. Screws M6 x 35
2. Screws M6 x 85

NOTE: Install the CPS harness retaining clamp at the position noted during the PTO housing removal.

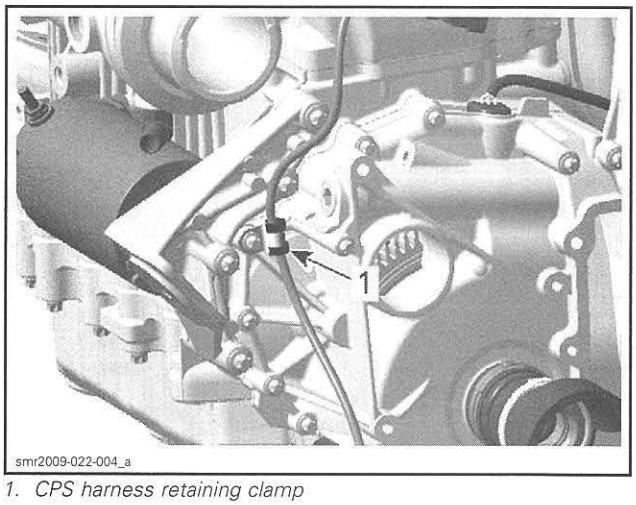

1. CPS harness retaining clamp

Install the PTO housing screws finger tight, then torque them as per following table and sequence numbered in the following illustration.

PTO HOUSING INSTALLATION		
GASKET	**PRODUCT**	**SCREW TORQUE**
NEW	LOCTITE 243 (BLUE) (P/N 293 800 060)	9 N•m (80 lbf•**in**)

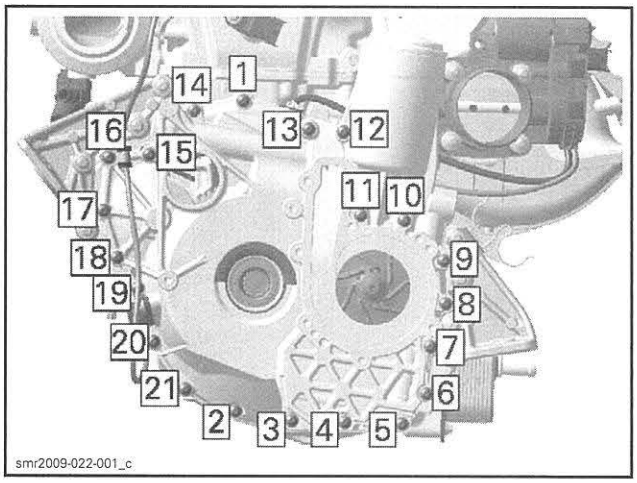

Reinstall LH engine support as per following table.

LH ENGINE SUPPORT INSTALLATION	
PRODUCT	TORQUE
LOCTITE 243 (BLUE) (P/N 293 800 060)	23 N•m (17 lbf•ft)

Remove safety block from under engine.

Install both rear engine support screws loosely.

Carry out an engine alignment, refer to the *ENGINE REMOVAL AND INSTALLATION* subsection.

NOTICE An engine alignment procedure must be carried out to ensure proper engine alignment or severe component damage may occur.

Install all remaining parts, reconnect hoses and electrical connectors. Refer to applicable subsections for procedures and specific details (torques, service products or instructions).

Refill engine with oil and cooling system with coolant. Refer to *LUBRICATION SYSTEM* and *COOLING SYSTEM* subsections.

PTO SEAL

PTO Seal Inspection

Inspect the PTO seal on the PTO housing. If brittle, hard or damaged, or if you see a sign of oil leakage, replace it.

Inspect ball bearing within PTO seal for excessive play and smooth operation.

Replace PTO seal if oil seal or ball bearing is damaged.

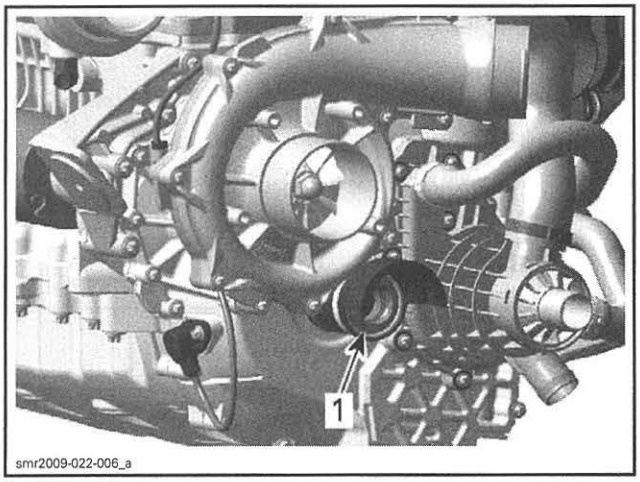

1. PTO seal

PTO Seal Removal

Place rags under PTO housing to prevent spillage. If spillage occurs, clean immediately with PULLEY FLANGE CLEANER (P/N 413 711 809) to prevent oil stains.

NOTE: Note position of seal and orientation of Oetiker clamp for installation.

Remove the Oetiker clamp retaining the seal to the PTO housing.

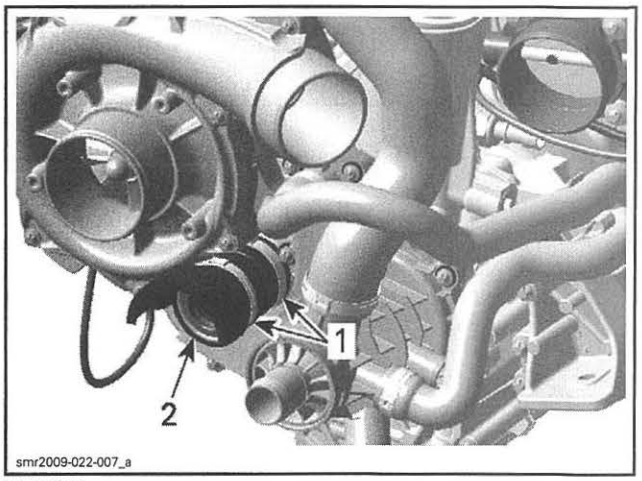

TYPICAL
1. Oetiker clamps
2. PTO seal

Pull seal from PTO housing.

PTO Seal Installation

Insert a **NEW** Oetiker clamp over the seal.

Push seal onto PTO housing. Be sure to align seal and clamp as noted at removal.

NOTICE When installing PTO seal on supercharged engines, make sure to position the Oetiker clamps as illustrated.

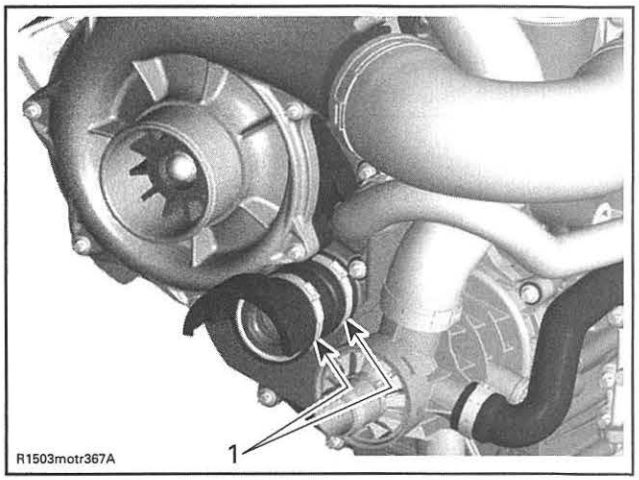

1. Oetiker clamps

Crimp Oetiker clamp.

REQUIRED TOOL	
OETIKER PLIERS (P/N 295 000 070)	

PTO COUPLING

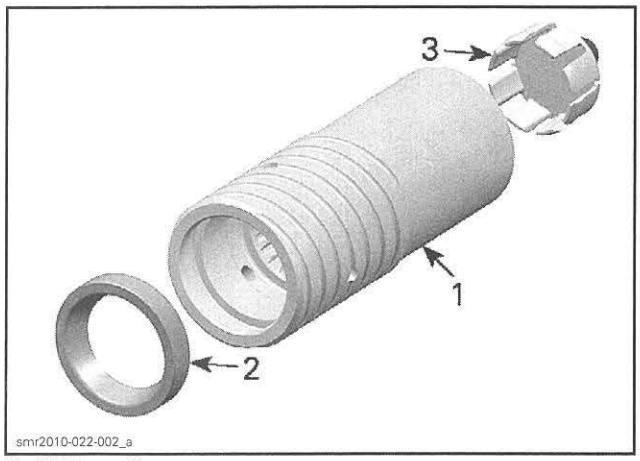

1. *PTO coupling*
2. *Seal*
3. *Stop sleeve*

PTO Coupling Removal

Lock crankshaft. Refer to *CYLINDER BLOCK* subsection for the procedure.

Remove PTO seal as described in previous procedure.

Unscrew coupling from crankshaft.

REQUIRED TOOL	
IMPELLER REMOVER/INSTALLER (P/N 529 035 820)	

NOTICE Apply engine oil to the removal tool to protect the seal located within the PTO coupling.

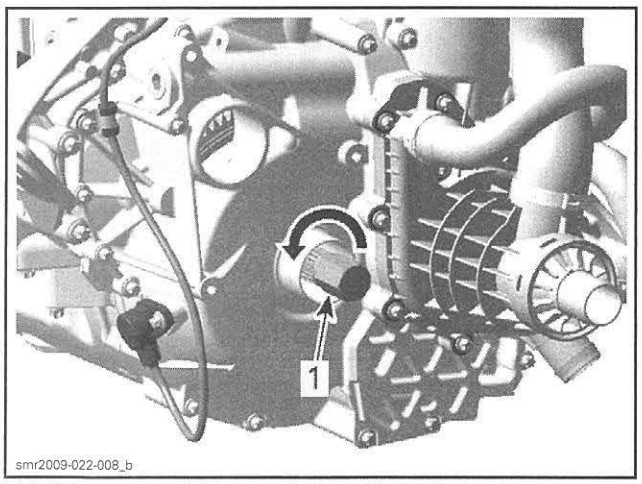

TYPICAL – TURN COUNTERCLOCKWISE TO REMOVE
1. *Impeller removal tool*

PTO Coupling Inspection

Inspect seal within coupling, if it is brittle, cracked or hard, replace it.

Check coupling for worn or damaged splines. Replace as required.

PTO Coupling Installation

For installation, reverse the removal procedure. However, pay attention to the following.

PTO COUPLING INSTALLATION	
PRODUCT	TORQUE
LOCTITE 648 (GREEN) (P/N 413 711 400)	250 N•m (184 lbf•ft)

STARTER DRIVE BEARINGS

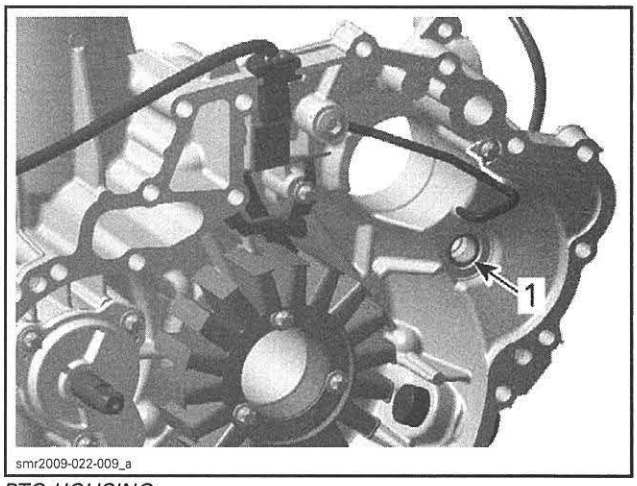

PTO HOUSING
1. *Starter drive bearing*

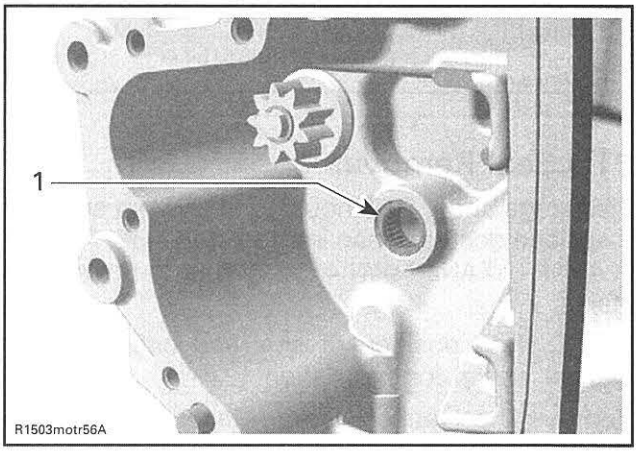

CYLINDER BLOCK
1. *Starter drive bearing*

Starter Drive Bearing Removal

Remove PTO housing, see procedure in this subsection.

Remove starter drive bearing from PTO housing or cylinder block.

REQUIRED TOOL	
BLIND HOLE BEARING PULLER SET (P/N 529 036 117)	

Starter Drive Bearing Installation

Prior to assembly grease starter drive bearing.

STARTER DRIVE BEARING INSTALLATION
PRODUCT
ISOFLEX GREASE TOPAS NB 52 (P/N 293 550 021)

Install starter drive bearing in the PTO housing or in the cylinder block.

REQUIRED TOOLS	
STARTER DRIVE SEAL PUSHER (P/N 420 876 502)	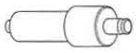
HANDLE (P/N 420 877 650)	

STATOR

Stator Output Voltage Test

Disconnect the magneto connector, located beside the ECM.

Install this following harness adapter onto the magneto connector.

NOTE: Do not connect the magneto harness adapter to the vehicle harness connector.

REQUIRED TOOL	
3-PIN MAGNETO HARNESS ADAPTER (P/N 529 036 016)	

Set multimeter to Vac scale.

Start engine.

Connect multimeter between each pair of YELLOW wires as per following table. Measure voltage between each pair of wires.

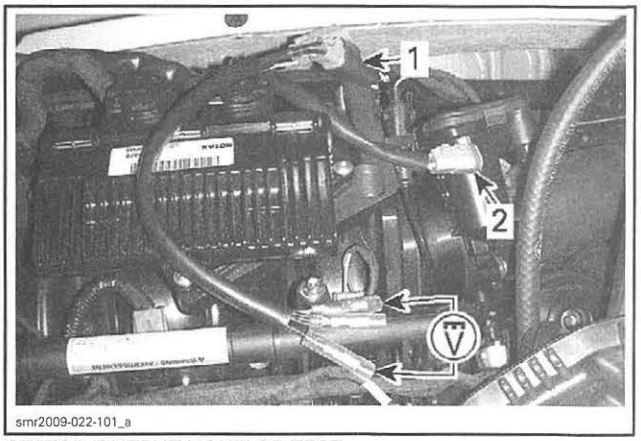

STATOR OUTPUT VOLTAGE TEST
1. *Connect adapter to magneto connector*
2. *Leave vehicle harness disconnected*

Read voltage as per following table.

STATOR OUTPUT VOLTAGE TEST		
TEST ENGINE SPEED	TERMINAL	VOLTAGE (AC)
4000 RPM	1 and 2	Approx. 50 Vac
	1 and 3	
	2 and 3	

If voltage is lower than specification, carry out a *STATOR CONTINUITY TEST* and a *STATOR INSULATION TEST*. See procedures in this subsection.

Stator Continuity Test

Disconnect the magneto connector, located beside the ECM.

Install the following harness adapter onto the magneto connector.

NOTE: Do not connect the magneto harness adapter to the vehicle harness connector.

REQUIRED TOOL	
3-PIN MAGNETO HARNESS ADAPTER (P/N 529 036 016)	

Connect multimeter between each pair of YELLOW wires.

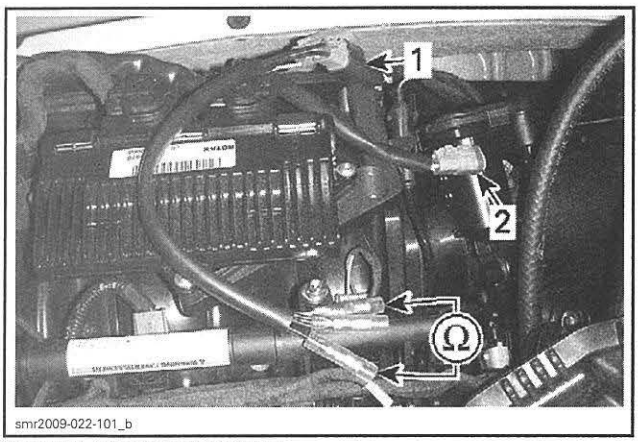

STATOR CONTINUITY TEST
1. *Connect adapter to magneto connector*
2. *Leave vehicle harness disconnected*

Read resistance.

STATOR CONTINUITY TEST	
TERMINAL	RESISTANCE @ 20°C (68°F)
1 and 2	0.1 - 1 Ω
1 and 3	
2 and 3	

If any result is out of specification, replace stator.

Stator Insulation Test

Disconnect the magneto connector, located beside the ECM.

Install the following harness adapter onto the magneto connector.

NOTE: Do not connect the magneto harness adapter to the vehicle harness connector.

REQUIRED TOOL	
3-PIN MAGNETO HARNESS ADAPTER (P/N 529 036 016)	

Connect multimeter between any YELLOW wire and engine ground.

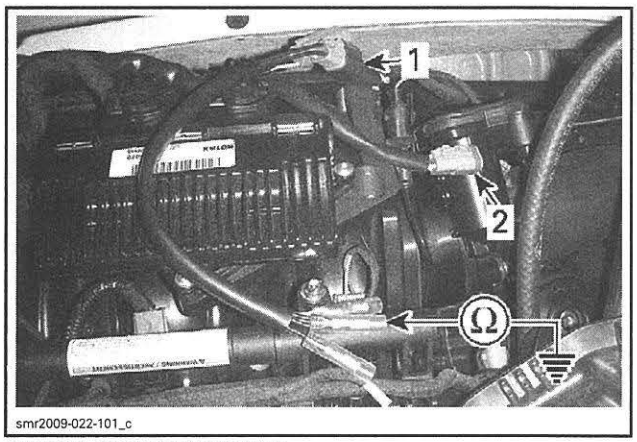

STATOR INSULATION TEST
1. *Connect adapter to magneto connector*
2. *Leave vehicle harness disconnected*

Read resistance.

STATOR INSULATION TEST	
TERMINAL	RESISTANCE @ 20°C (68°F)
Any YELLOW wire and engine ground	Infinity (open circuit)

If there is a resistance or continuity to engine ground, the stator coils and/or the wiring is grounded and need to be repaired or replaced.

Stator Removal

Remove PTO housing, see procedure in this subsection.

Remove stator cable holding plate from PTO housing.

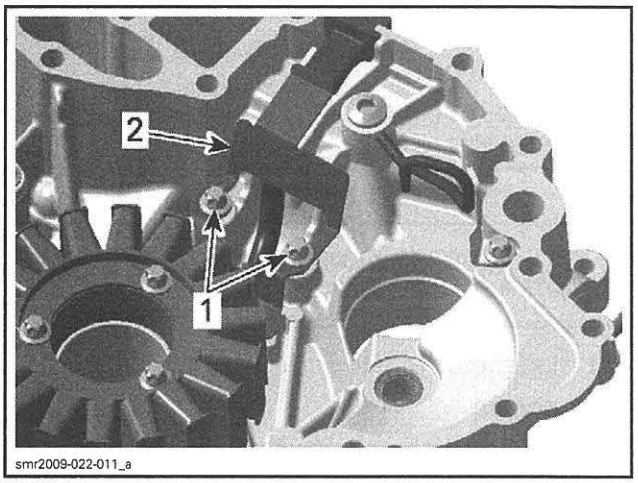

TYPICAL
1. *Screws*
2. *Holding plate*

Remove stator retaining screws.

Remove stator from PTO housing.

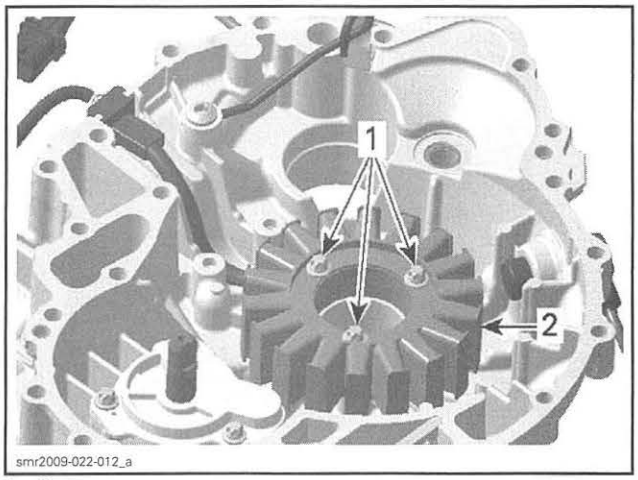

1. Stator screws
2. Stator

Stator Installation

For installation, reverse the removal procedure. However, pay attention to the following.

NOTE: The position of the stator in the PTO housing is determined by a key on the stator and a notch in the magneto housing.

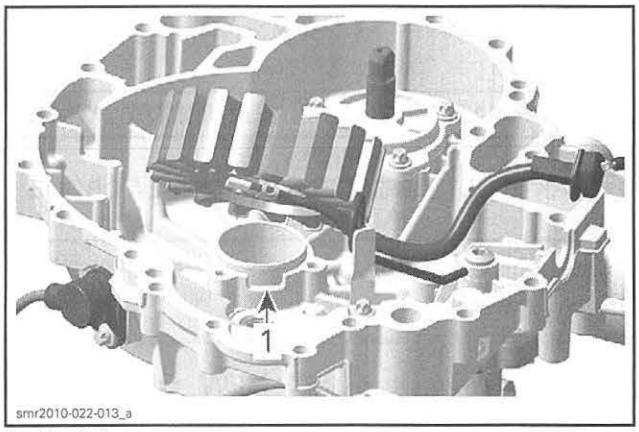

1. Notch for stator

Place the stator cable rubber grommet in the notch provided in the PTO housing.

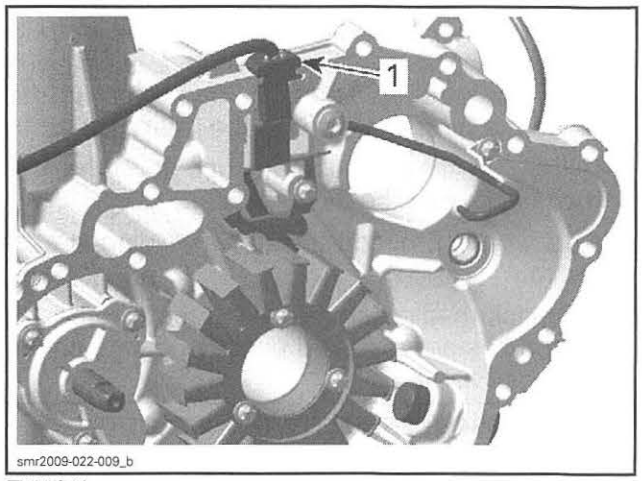

TYPICAL
1. Stator cable grommet

Apply threadlocker and torque stator and cable holding plate screws as per following table.

STATOR INSTALLATION	
PRODUCT	TORQUE (STATOR AND CABLE HOLDING PLATE)
LOCTITE 243 (BLUE) (P/N 293 800 060)	9 N•m (80 lbf•**in**)

Install PTO housing as per procedures in this subsection.

ROTOR AND TRIGGER WHEEL

Rotor and Trigger Wheel Inspection

Inspect rotor and trigger wheel condition. Pay particular attention to the inside of the rotor for:

- Cracks
- Rub marks
- Discoloration.

If damaged, replace faulty part.

Check the trigger wheel for bent teeth using the following procedure.

1. Install a dial indicator on crankcase casting.
2. Position the gauge on a tooth and set it to zero (0). Be sure to lock the indicator dial to prevent movement of the dial during the remainder of the procedure.
3. Draw a line on the tooth to indicate it as the first tooth measured (reference tooth).
4. Gently lift the gauge contact point off the tooth and rotate the rotor to the next tooth.

NOTE: When lifting contact point off the tooth for rotor rotation, be careful not to move gauge position or test readings taken on next tooth will not be accurate with reference to the reference tooth.

5. Gently set the gauge contact point on the next tooth and read the dial indicator.
6. Repeat this procedure taking a reading at each tooth.
7. Recheck reading on reference tooth to ensure gauge has not changed position (gauge should still read zero).

TRIGGER WHEEL TEETH INSPECTION
MAXIMUM ALLOWABLE DIFFERENCE
0.15 mm (.006 in)

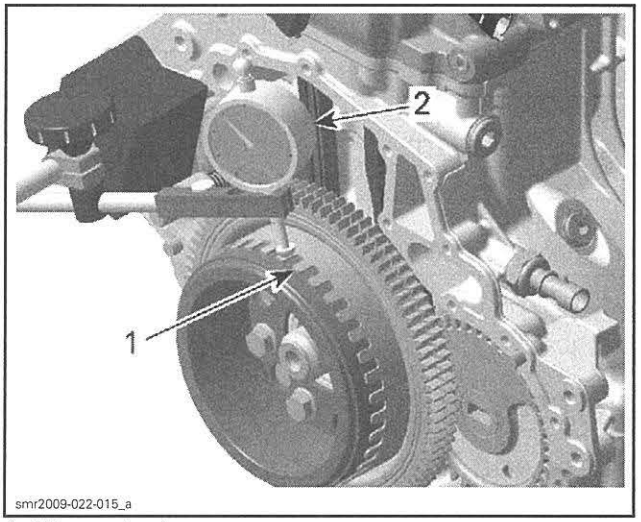

1. Trigger wheel
2. Dial indicator

If the reading exceeds the maximum allowable tolerance, straighten the tooth or replace the trigger wheel.

8. Properly reinstall PTO housing.

Rotor and Trigger Wheel Removal

Lock crankshaft, refer to *CYLINDER BLOCK* subsection for procedure.

Remove PTO housing, see procedure in this subsection.

Remove and discard the magneto rotor retaining screws.

Pull rotor and trigger wheel off crankshaft end.

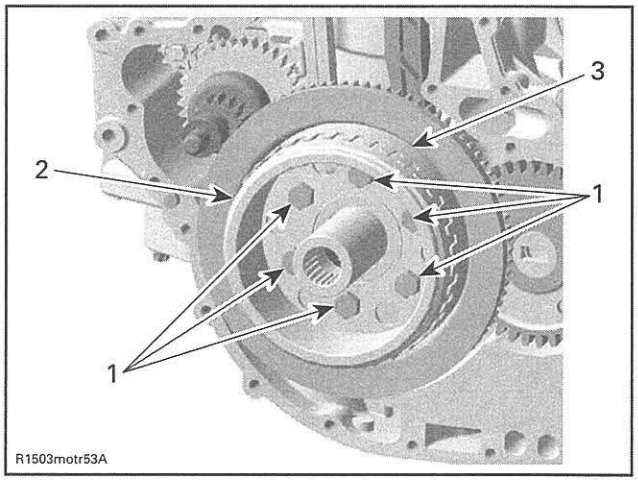

TYPICAL
1. Rotor retaining screws
2. Rotor
3. Trigger wheel

Rotor and Trigger Wheel Installation

For installation, reverse the removal procedure. However, pay attention to the following.

1. Align the trigger wheel to the crankshaft using the location pin on the crankshaft end.
2. Install **NEW** OEM rotor screws and torque them as per following table.

ROTOR AND TRIGGER WHEEL INSTALLATION		
PARTS	TORQUE (CRISSCROSS PATTERN)	FINAL TORQUE
NEW OEM rotor screws	15 N•m (133 lbf•**in**)	Additional 50° rotation with a torque angle gauge

NOTICE **Always install NEW OEM screws with pre-applied threadlocker. These are stretch screws that are one time use only. Not replacing rotor screws may lead to engine damage and failure.**

RING GEAR

Ring Gear Removal

Lock crankshaft. Refer to *CYLINDER BLOCK* subsection for procedure.

Remove the PTO housing, see procedure in this subsection.

Remove and discard the magneto rotor retaining screws.

Pull rotor, trigger wheel, and ring gear off crankshaft end.

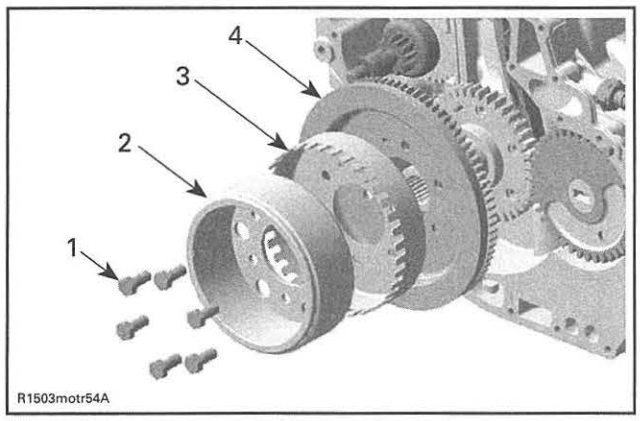

TYPICAL
1. *Magneto rotor retaining screws*
2. *Rotor*
3. *Trigger wheel*
4. *Ring gear*

Ring Gear Inspection

Inspect ring gear for damages. Pay particular attention to teeth condition. If badly worn, cracked, or broken teeth are found, replace ring gear.

Ring Gear Installation

For installation, reverse the removal procedure. However, pay attention to the following.

Align the ring gear and trigger wheel to the crankshaft using the location pin on the crankshaft end.

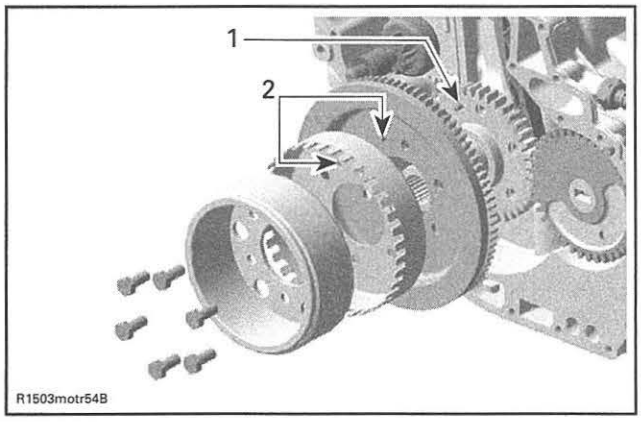

TYPICAL
1. *Location pin*
2. *Location pin holes*

Install **NEW OEM** rotor screws and torque them as per following table.

RING GEAR INSTALLATION		
PARTS	TORQUE (CRISSCROSS PATTERN)	FINAL TORQUE
NEW OEM rotor screws	15 N•m (133 lbf•**in**)	Additional 50° rotation with a torque angle gauge

NOTICE Always install NEW OEM screws with pre-applied threadlocker. These are stretch screws that are one time use only. Not replacing rotor screws may lead to engine damage and failure.

STARTER DRIVE

Starter Drive Removal

Remove the PTO housing and ring gear as described in this subsection.

Remove starter drive.

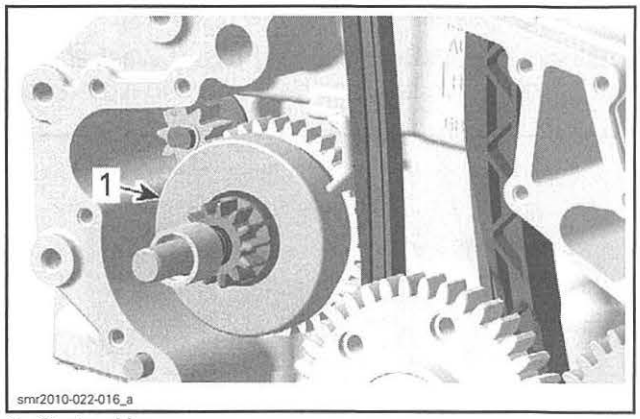

1. Starter drive

NOTICE Be careful not to lose the spring discs and thrust washer located on the starter drive shaft.

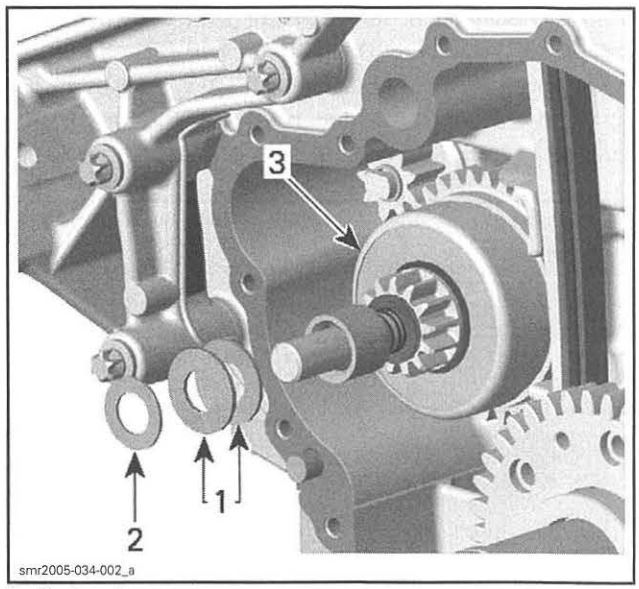

1. *Spring discs*
2. *Thrust washer*
3. *Starter drive*

Starter Drive Inspection

Inspect all starter drive parts for excessive wear, cracks and other defects. Pay attention to the condition of the drive gear teeth.

Ensure proper operation of the starter drive sprag clutch.

If any part of the assembly shows signs of abnormal wear, cracks, broken teeth or malfunction (sprag clutch), replace the faulty part.

Starter Drive Installation

For installation, reverse the removal procedure. However, pay attention to the following.

Position the spring discs and thrust washer onto the starter drive shaft as per following illustration.

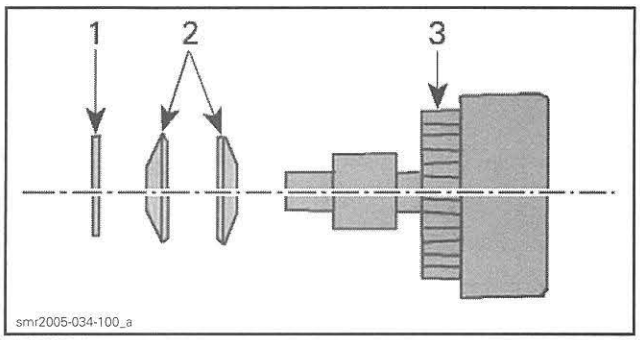

TYPICAL
1. *Thrust washer*
2. *Spring discs*
3. *Starter drive*

When installing a new starter drive, oil the shaft, gear teeth and splines with engine oil.

Apply ISOFLEX GREASE TOPAS NB 52 (P/N 293 550 021) on the starter drive bearings located in the cylinder block and in the PTO housing.

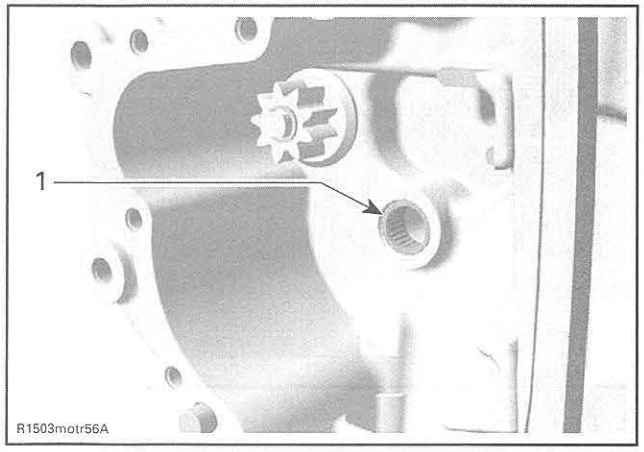

CYLINDER BLOCK
1. *Starter drive bearing*

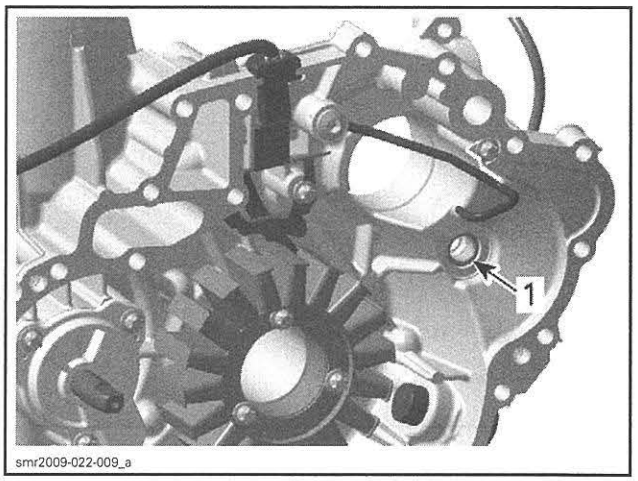

PTO HOUSING
1. *Starter drive bearing*

NOTICE Be sure not to forget the spring discs and thrust washer on the starter drive shaft when reassembling.

LUBRICATION SYSTEM

SERVICE TOOLS

Description	Part Number	Page
ADAPTER HOSE	529 035 652	115
BACK PROBE TEST WIRES	529 036 063	133
ECM ADAPTER TOOL	529 036 166	117, 134
FLUKE 115 MULTIMETER	529 035 868	117, 133–134
OIL SEAL GUIDE	529 035 822	122
PRESSURE GAUGE	529 035 709	115
SUCTION PUMP	529 035 880	113
SUPERCHARGER OIL SPRAY NOZZLE TOOL	529 036 134	127
WATER PUMP SEAL PUSHER	529 035 823	122–123

SERVICE PRODUCTS

Description	Part Number	Page
LOCTITE 243 (BLUE)	293 800 060	118, 120, 122, 126–127, 132, 135
LOCTITE 5910	293 800 081	119
PULLEY FLANGE CLEANER	413 711 809	114, 124
SUPER LUBE GREASE	293 550 030	115
XPS 4-STROKE SYNTH. BLEND OIL (SUMMER)	293 600 121	112

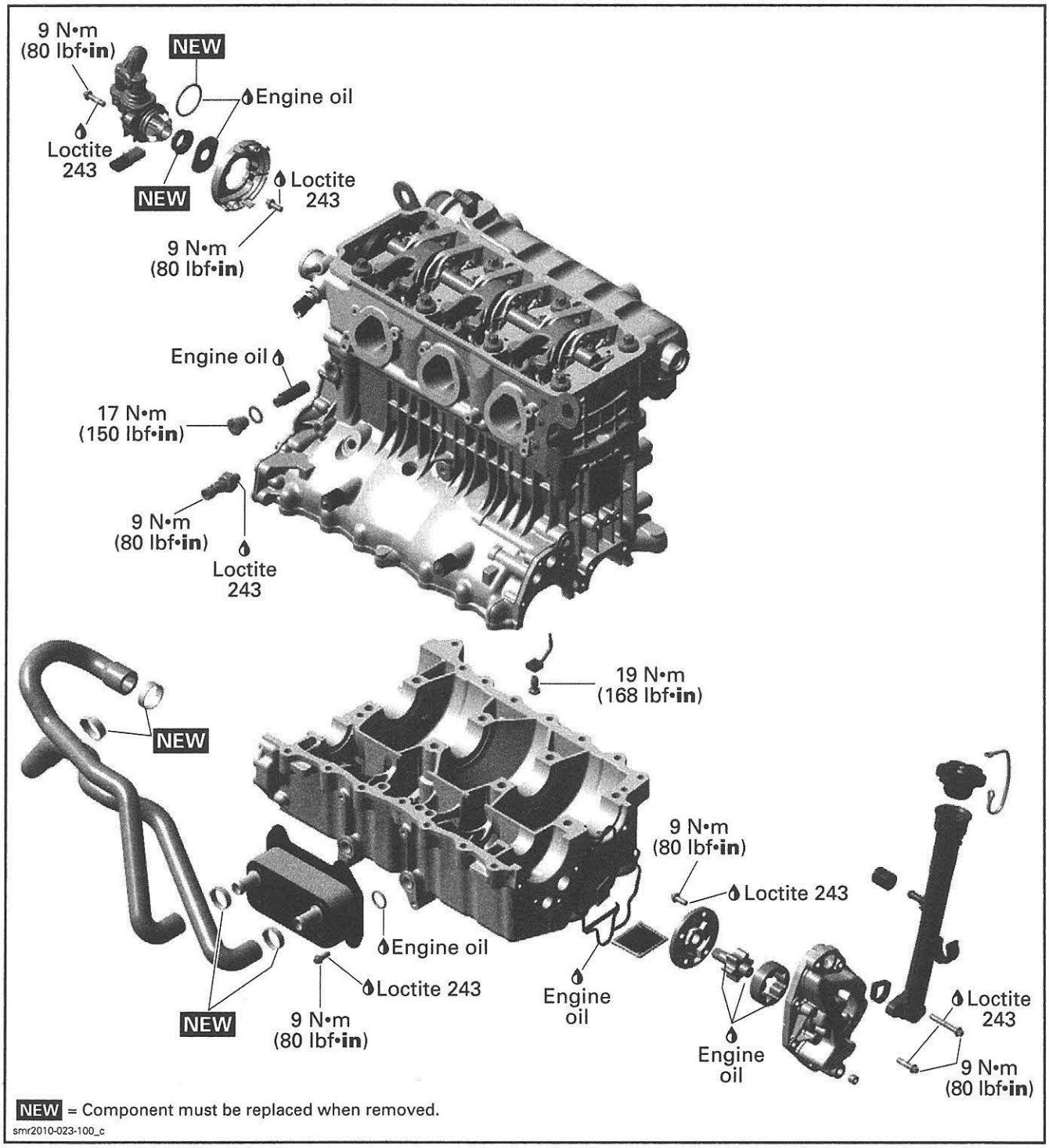
9 N•m
(80 lbf•in)
NEW
Engine oil
Loctite
243
NEW
Loctite
243
9 N•m
(80 lbf•in)
Engine oil
17 N•m
(150 lbf•in)
9 N•m
(80 lbf•in)
Loctite
243
19 N•m
(168 lbf•in)
NEW
9 N•m
(80 lbf•in)
Loctite 243
Engine oil
Loctite 243
NEW
9 N•m
(80 lbf•in)
Engine
oil
Engine
oil
Loctite
243
9 N•m
(80 lbf•in)
NEW = Component must be replaced when removed.
smr2010-023-100_c

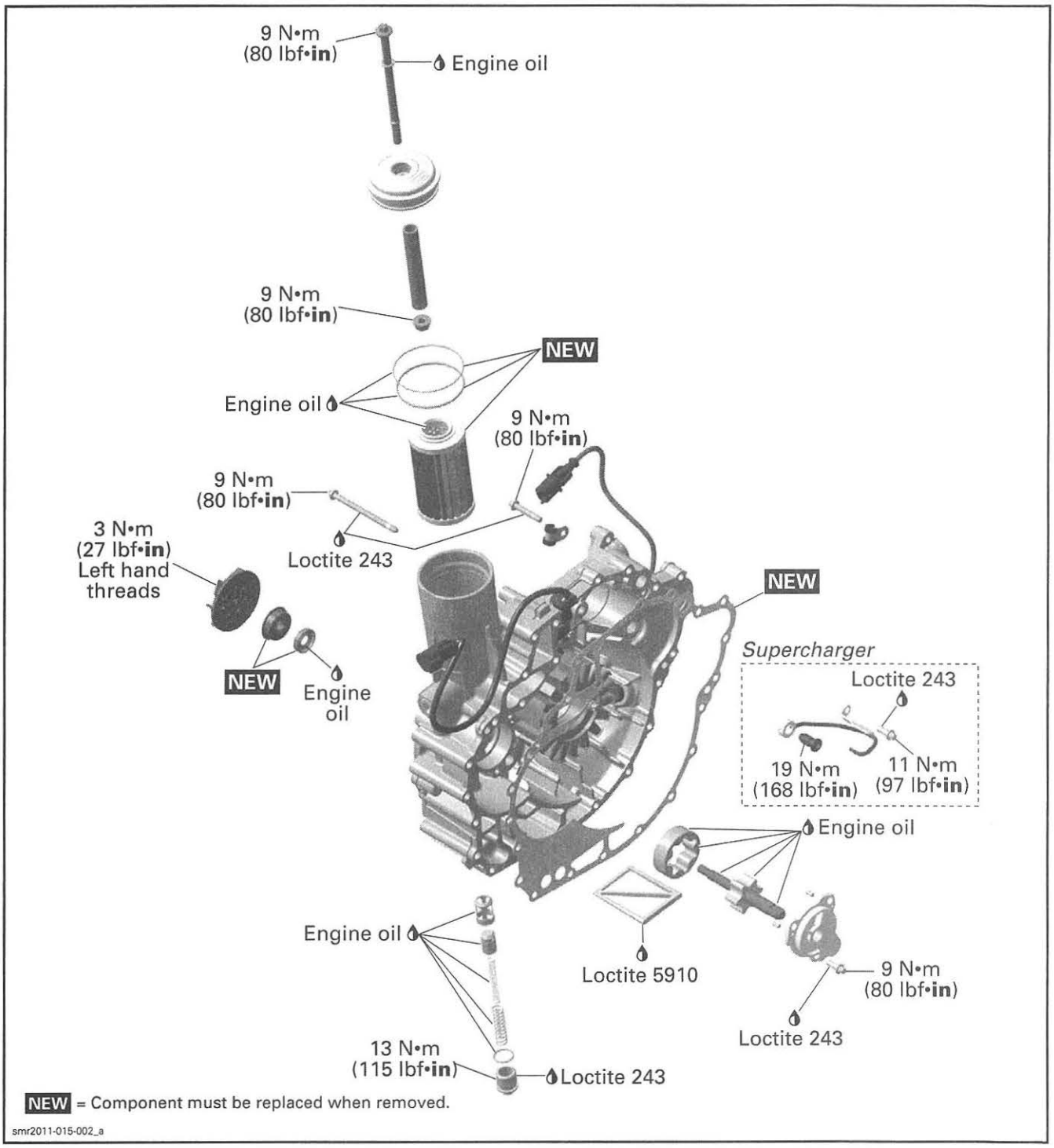
9 N•m
(80 lbf•in)
Engine oil
9 N•m
(80 lbf•in)
NEW
Engine oil
9 N•m
(80 lbf•in)
9 N•m
(80 lbf•in)
3 N•m
(27 lbf•in)
Left hand
threads
Loctite 243
NEW
NEW
Engine
oil
Supercharger
Loctite 243
19 N•m
(168 lbf•in)
11 N•m
(97 lbf•in)
Engine oil
Engine oil
Loctite 5910
9 N•m
(80 lbf•in)
Loctite 243
13 N•m
(115 lbf•in)
Loctite 243
NEW = Component must be replaced when removed.
smr2011-015-002_a

ENGINE LUBRICATION CIRCUIT

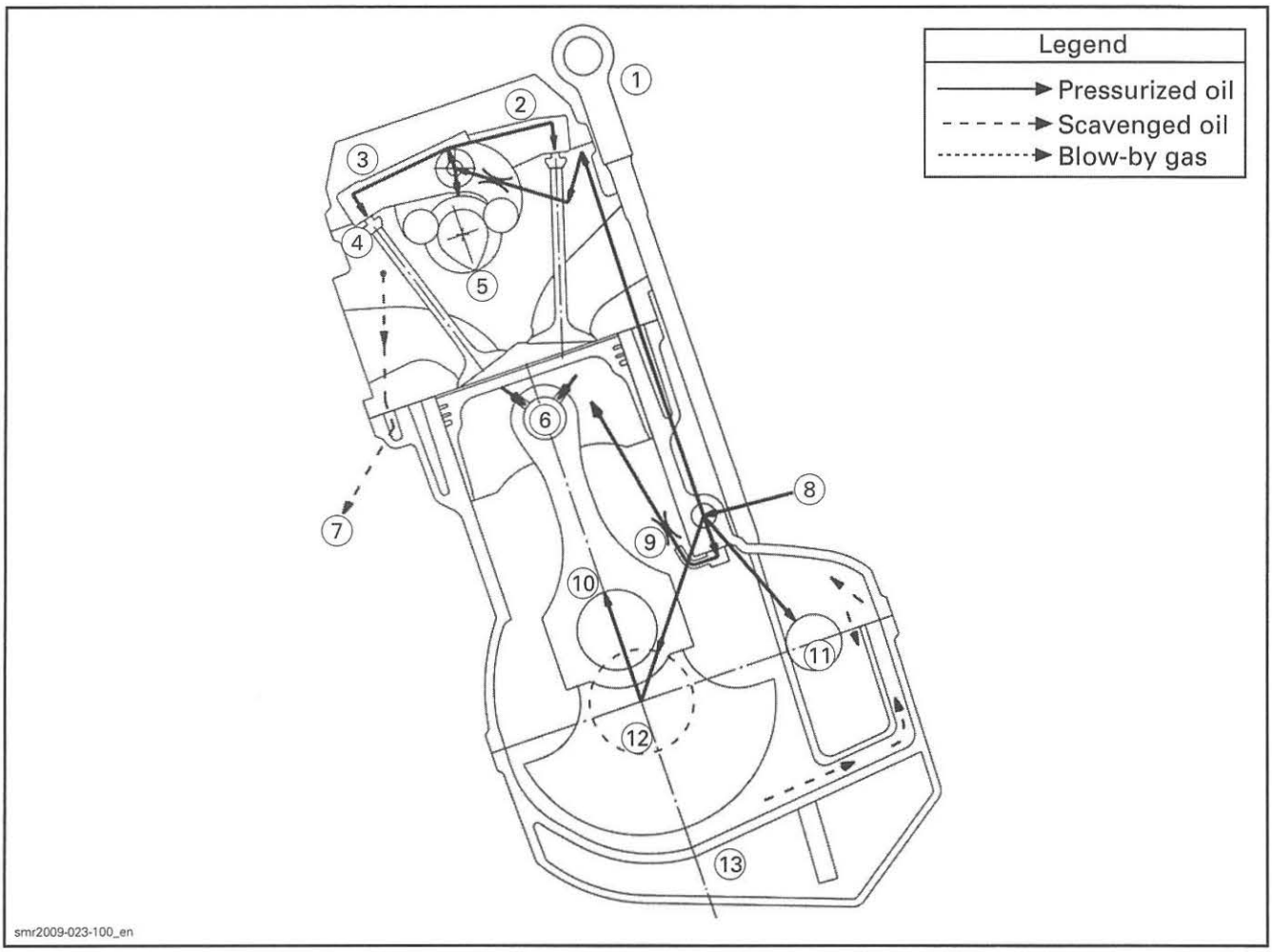

1. *Oil dipstick*
2. *Rocker arm (intake)*
3. *Rocker arm (exhaust)*
4. *Hydraulic valve lifter*
5. *Camshaft*
6. *Piston pin*
7. *Into PTO housing*
8. *From oil filter*
9. *Piston cooling*
10. *Connecting rod*
11. *Balance shaft*
12. *Crankshaft*
13. *Oil tank*

ENGINE LUBRICATION CIRCUIT (CONT'D)

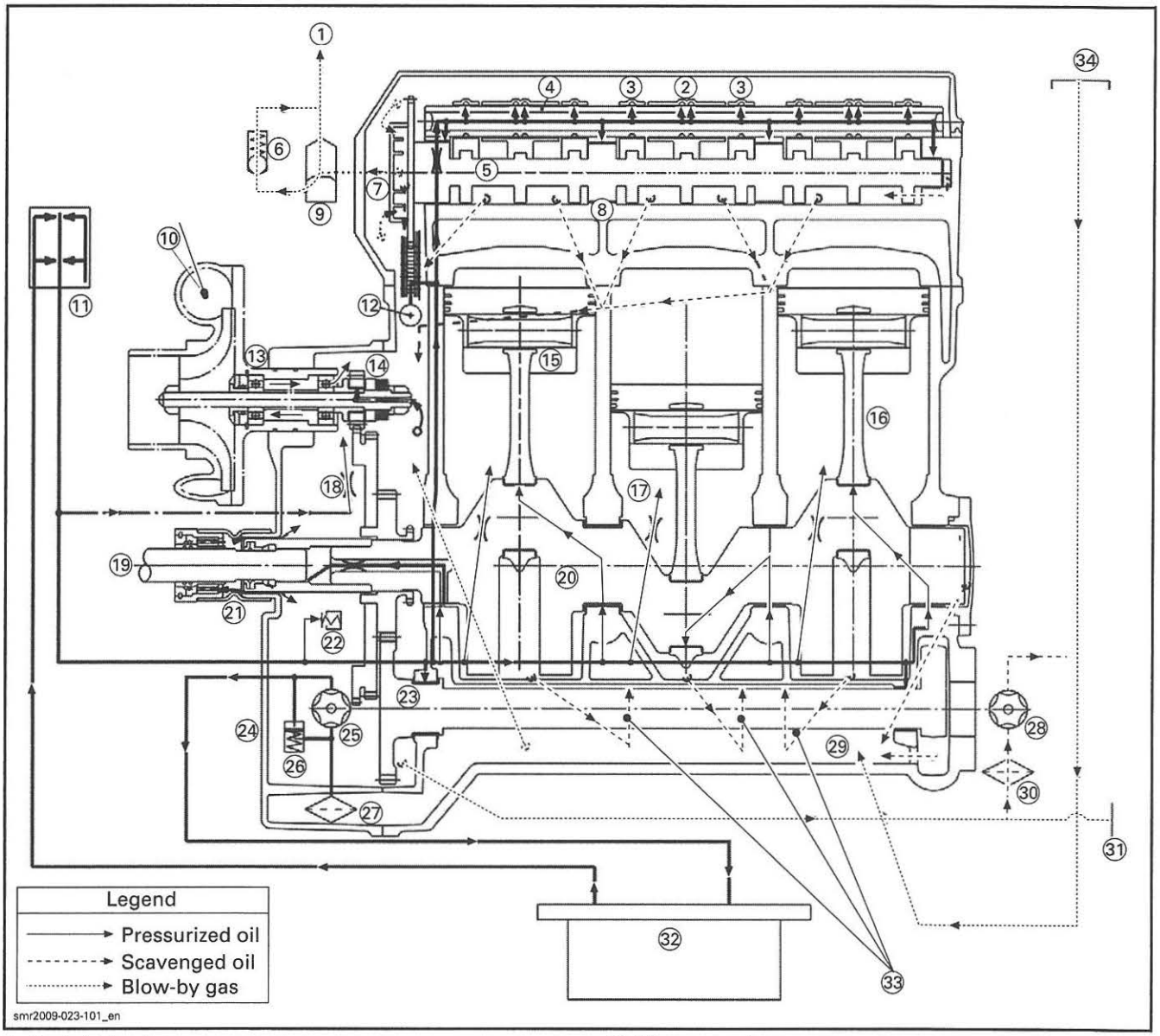

1. *To air intake silencer*
2. *Rocker arm (intake)*
3. *Rocker arm (exhaust)*
4. *Rocker arm axle*
5. *Camshaft*
6. *Pressure relief valve*
7. *Oil separator*
8. *Cylinder head*
9. *Blow-by valve*
10. *Supercharger (if so equipped)*
11. *Oil filter*
12. *Hydraulic chain tensioner*
13. *Supercharger bearing (if so equipped)*
14. *Friction clutch*
15. *Piston pin*
16. *Connecting rod*
17. *Piston cooling*
18. *Oil spray nozzle*
19. *Drive shaft*
20. *Crankshaft*
21. *PTO seal*
22. *Oil pressure switch*
23. *Balance shaft*
24. *PTO housing*
25. *Pressure pump*
26. *Pressure relief valve*
27. *Oil strainer (pressure pump)*
28. *Scavenge pump*
29. *Oil tank*
30. *Oil strainer (scavenge pump)*
31. *Oil drainage (PTO housing)*
32. *Oil cooler*
33. *Scavenge of oil and blow-by gas*
34. *Oil filler cap*

MAINTENANCE

ENGINE OIL

Recommended Oil

Use XPS 4-STROKE SYNTH. BLEND OIL (SUMMER) (P/N 293 600 121).

Naturally-Aspirated Engines

If the recommended XPS™ engine oil is not available, use a 5W 40 or 10W 40 engine oil meeting the requirements for API service classification SM, SL or SJ. Always check the API service label certification on the oil container, it must contain at least one of the above standards.

Supercharged Intercooled Engines

If XPS™ engine oil is not available, use a 10W40 **mineral** engine oil compatible with wet clutches.

NOTE: The XPS engine oil has been thoroughly tested to be free of any additives that could impair the functionality of the supercharger clutch.

NOTICE NEVER use synthetic oil. This would impair the proper operation of the supercharger clutch. Do not add any additives to the recommended oil. Mineral oils not recommended by BRP may also contain additives (friction modifiers) that may cause inappropriate slippage of the supercharger and eventually lead to premature wear. For this reason, XPS Synthetic Blend oil (Summer Grade) or a BRP approved equivalent are the only recommended oils. Use of any oil not recommended by BRP may void BRP's limited warranty.

Oil Level Verification

NOTICE Check level frequently and refill if necessary. Do not overfill — it would make the engine smoke and reduce its power. Operating the engine with an improper level may severely damage engine. Wipe off any spillage.

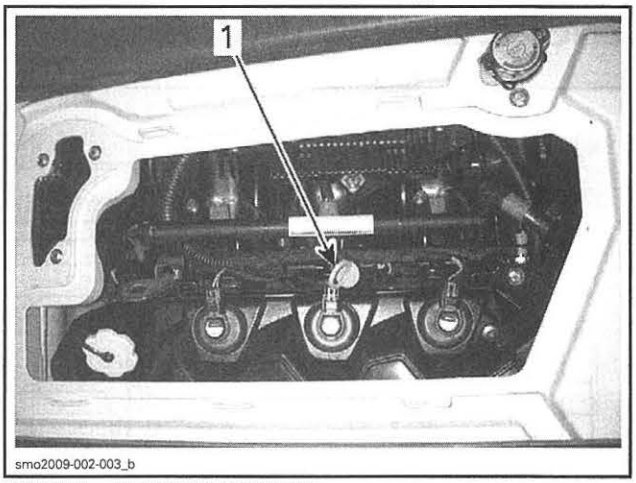

TYPICAL – iS MODELS SHOWN
1. Oil dipstick

Check the oil level as follows:

NOTE: It is of the utmost importance to follow this procedure in order to obtain an accurate reading of the engine oil level.

1. Watercraft must be level. Check oil level either with watercraft in water or out of water.

NOTE: If the watercraft is out of water, link a garden hose to the hose adapter. Refer to *EXHAUST SYSTEM FLUSHING* in the *EXHAUST SYSTEM* subsection.

NOTICE When watercraft is out of water:
- Never run engine without supplying water to the exhaust system.
- Never run engine longer than 2 minutes. Drive line seal has no cooling when watercraft is out of water.

2. **Warm-up** engine then let idle for **30 seconds** before stopping.
3. Stop engine.
4. Open or remove seat.
5. On **models with suspension**, remove the ventilation box from the deck extension to gain partial access to engine compartment.

NOTE: To remove the rear ventilation box, simply release the 3 clips retaining it and lift it off the deck extension.

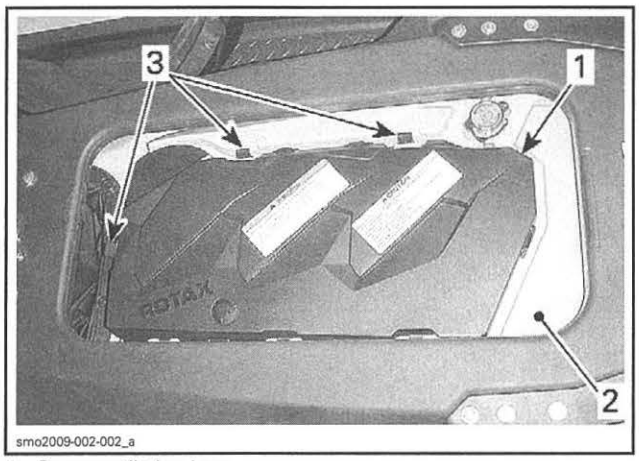

1. Rear ventilation box
2. Deck extension
3. Retaining clips

6. Wait at least 30 seconds for the oil to settle in the engine, then pull dipstick out and wipe clean.

⚠ CAUTION Engine oil may be hot. Certain components in the engine compartment may be very hot. Direct contact may result in skin burn.

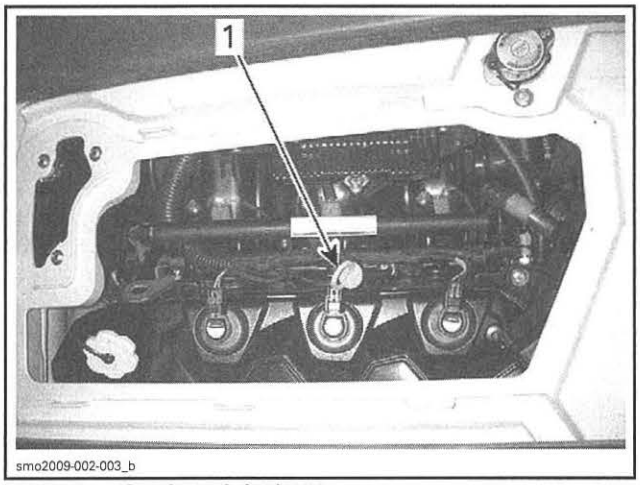

TYPICAL – iS MODELS SHOWN
1. Oil dipstick

7. Reinstall dipstick, push in completely.
8. Remove dipstick and read oil level. It should be between the FULL and ADD marks.

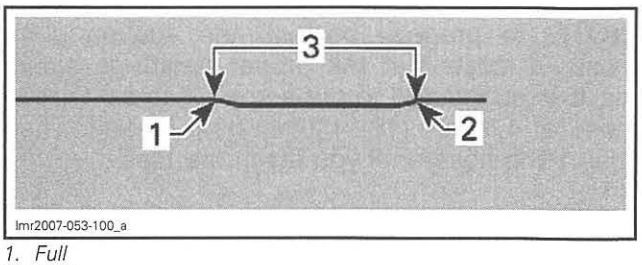

1. Full
2. Add
3. Operating range

Otherwise, add oil until its level is between marks as required.

To add oil, unscrew oil cap. Place a funnel into the oil filler neck opening and add the recommended oil to the proper level. Do not overfill.

Oil Change

NOTE: Oil and oil filter must be replaced at the same time. Oil change and oil filter replacement should be done with a warm engine.

Bring engine to its normal operating temperature.

NOTICE When watercraft is out of water:
- Never run engine without supplying water to the exhaust system.
- Never run engine longer than 2 minutes. Drive line seal has no cooling when watercraft is out of water.

Run engine for 10 seconds at 4000 RPM and shut it off at this RPM. This will move oil from PTO housing to oil tank to allow maximum oil draining.

Remove oil filler cap and dipstick.

⚠ CAUTION Engine oil may be hot. Certain components in the engine compartment may be very hot. Direct contact may result in skin burn.

Siphon oil through the dipstick tube.

REQUIRED TOOL	
SUCTION PUMP (P/N 529 035 880)	

NOTICE Never crank or start engine when suction pump hose is in the dipstick tube. Never start engine when there is no oil in engine.

NOTE: To properly position the suction pump hose is located at the proper height to siphon oil, it is suggested to put some electrical tape on hose at 475 mm (18-11/16 in) from its end. Then, insert the hose until you reach the tape.

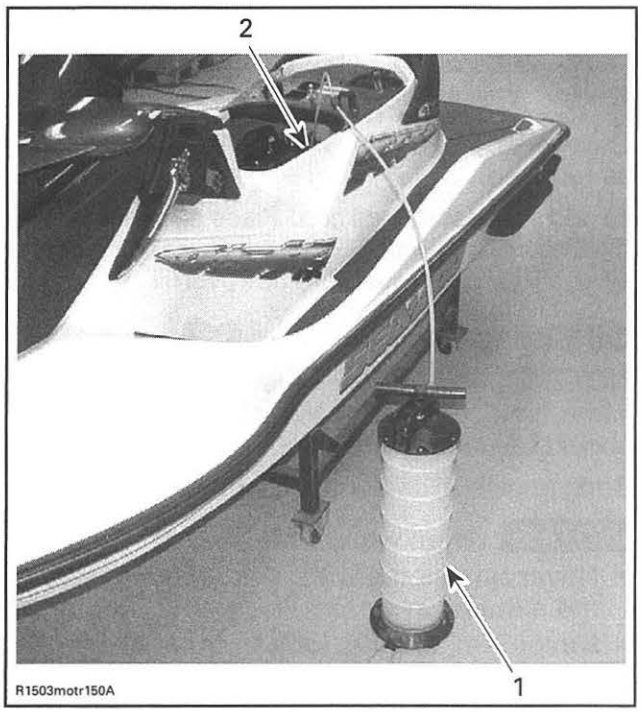

TYPICAL
1. *Suction pump*
2. *Suction pump hose in the dipstick tube*

Pull suction pump hose out of dipstick tube.

Fully depress the throttle lever and HOLD it while cranking engine for 10 seconds. Siphon oil again. Repeat the crank-siphon cycle 2 - 3 times.

Refill engine with the recommended oil, see *RECOMMENDED OIL* in this subsection.

Reinstall oil filler cap and dipstick.

Replace *OIL FILTER*, see procedure in this subsection.

OIL FILTER

Oil Filter Removal

Remove:
- Oil filter screw
- Oil filter cover
- Oil filter.

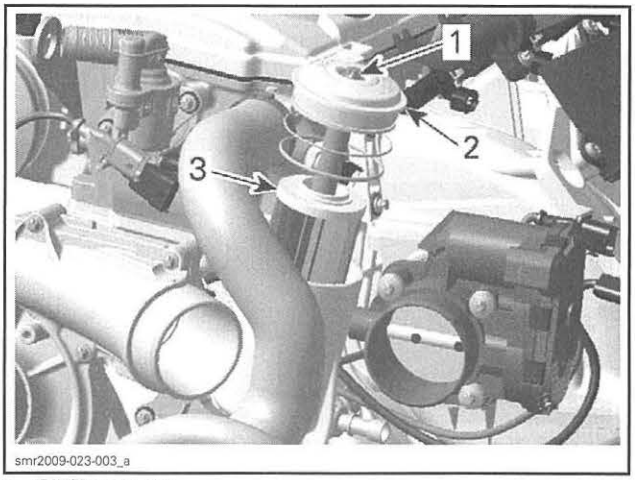

1. *Oil filter screw*
2. *Oil filter cover*
3. *Oil filter*

Place rags in filler area to prevent spillage. If spillage occurs, clean immediately with the PULLEY FLANGE CLEANER (P/N 413 711 809) to prevent stains.

Oil Filter Inspection

Check oil filter screw O-ring, change if necessary.

Check and clean the oil filter inlet and outlet area for dirt and other contaminations.

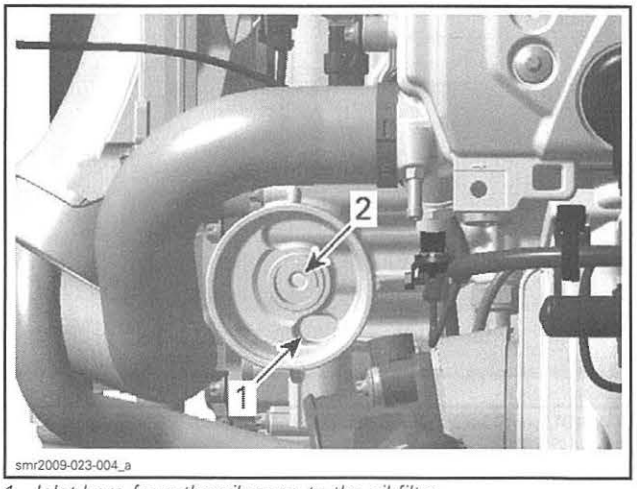

1. *Inlet bore from the oil pump to the oil filter*
2. *Outlet bore to the engine oil providing system*

Oil Filter Installation

For installation, reverse the removal procedure. Pay attention to the following details.

Install a **NEW** oil filter.

Install **NEW** O-rings on oil filter cover.

Apply engine oil on filter ring, filter cover O-rings and on oil filter screw O-ring.

NOTE: In salt water area, it is recommended to coat mating surface of cover with SUPER LUBE GREASE (P/N 293 550 030).

Torque oil filter screw to specification.

TIGHTENING TORQUE	
Oil filter screw	9 N•m (80 lbf•**in**)

INSPECTION

ENGINE OIL PRESSURE

Oil Pressure Test Requirement

Bring engine to its normal operating temperature.

⚠ CAUTION **Certain components in the engine compartment may be very hot. Direct contact may result in skin burn.**

NOTICE **When watercraft is out of water:**

- **Never run engine without supplying water to the exhaust system.**
- **Never run engine longer than 2 minutes. Drive line seal has no cooling when watercraft is out of water.**

Required Tools for Oil Pressure Test

REQUIRED TOOLS	
PRESSURE GAUGE (P/N 529 035 709)	
ADAPTER HOSE (P/N 529 035 652)	

NOTE: A 1/8 NPT pipe extension may ease the installation.

Oil Pressure Specifications

Use the following table to compare the oil pressure at different RPM.

OIL PRESSURE	
Idle (cold)	448 kPa - 648 kPa (65 PSI - 94 PSI) for a very short time
Idle (at 80°C (176°F))	Min. 228 kPa (33 PSI)
4000 - 7500	400 kPa - 496 kPa (58 PSI - 72 PSI)

Test at the Oil Pressure Switch Location

Remove oil pressure switch and install gauge.

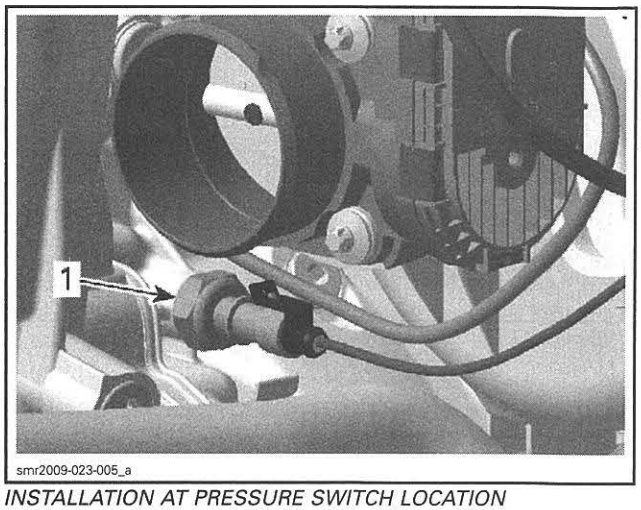

INSTALLATION AT PRESSURE SWITCH LOCATION
1. Remove oil pressure switch and install gauge here

To prevent the EMS to go in limp home mode (at 2500 RPM) or to generate a fault code, do the following:

1. Ground OPS to engine.
2. Plug OPS to harness.
3. Start engine.
4. While engine is running, unplug OPS from harness.

Read oil pressure at different RPM as per table above.

Reinstall oil pressure switch.

Test at the Cylinder Head Location

The oil pressure may be measured from cylinder head if desired.

Remove plug located on cylinder head and install gauge.

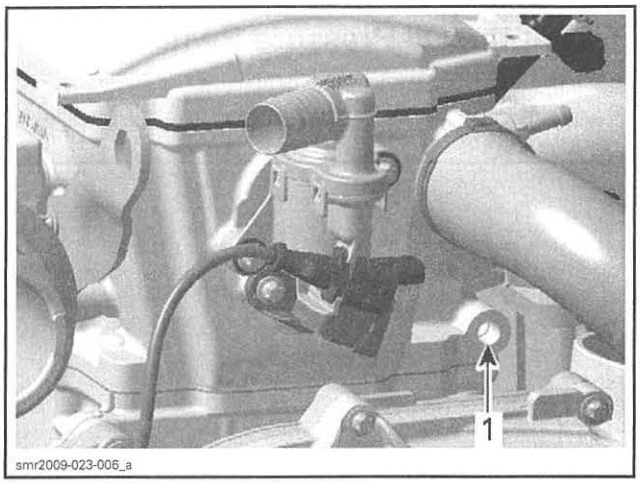

INSTALLATION AT CYLINDER HEAD
1. Remove plug and install gauge here

Start engine and read pressure at different RPM as per table above.

Reinstall plug.

TROUBLESHOOTING

The following is provided to help in diagnosing the probable source of troubles. It is a guideline and it should not be assumed to list all possible problems.

Always check for fault codes. If a fault code is detected, service the fault code first. Refer to *ENGINE MANAGEMENT* section.

LOW OR NO ENGINE OIL PRESSURE

1. Oil level too low.
   - *Refill engine oil.*
   - *Check for high oil consumption. See below.*
   - *Check for oil leaks (oil leaking out of leak indicator hole, gaskets, oil seal or O-rings). Repair or replace.*
2. Oil pressure switch defective.
   - *Check and replace if necessary.*
3. Oil filter clogged.
   - *Replace engine oil and oil filter at the same time.*
4. Oil pressure regulator valve sticks open, or spring load is too small.
   - *Clean oil regulator piston and its bore. Replace if necessary.*
   - *Measure spring free length. Replace if too small.*
5. Oil pump(s) worn or damaged.
   - *Check oil pump rotors and its bore for wear limits. Replace if out of specification.*
6. Engine oil strainers are clogged.
   - *Remove and clean engine oil strainers.*
7. Heavy wear on plain bearings.
   - *Check radial clearance of plain bearings. Replace if out of specification.*

HIGH OIL CONSUMPTION

1. Oil in breathing system.
   - *Check if breather V-ring is brittle, hard or damaged. Replace V-ring.*
2. Valve stem seals worn or damaged.
   - *Replace valve stem seals.*
3. Piston rings worn out (blue colored exhaust smoke).
   - *Replace piston rings.*

OIL CONTAMINATION (WHITE APPEARANCE)

1. Water ingestion through drive shaft and floating ring
   - *Check if water is leaking between drive shaft and floating ring. Repair or replace defective parts. Refer to PTO HOUSING AND MAGNETO subsection.*
   - *Change engine oil and filter.*
2. Oil seal and rotary seal on water pump shaft leaking.
   - *Replace oil seal and water pump shaft assembly.*
   - *Change engine oil and oil filter.*
3. Cylinder head gasket leaking.
   - *Replace cylinder head gasket and tighten cylinder head with recommended torque.*
   - *Change engine oil and oil filter.*
4. Cylinder head screws not properly tightened.
   - *Retighten screws with recommended torque.*
   - *Change engine oil.*
5. Oil cooler O-rings are leaking.
   - *Replace O-rings.*
   - *Change engine oil and oil filter.*
6. Cylinder block or cylinder head casting is leaking.
   - *Check for internal cracks in casting. Replace damaged components.*
   - *Change engine oil and oil filter.*

PROCEDURES

OIL PRESSURE SWITCH (OPS)

Oil Pressure Switch Operation

The switch threshold value to send a signal of low oil pressure may vary from a minimum of 180 kPa (26 PSI) to a maximum of 220 kPa (32 PSI).

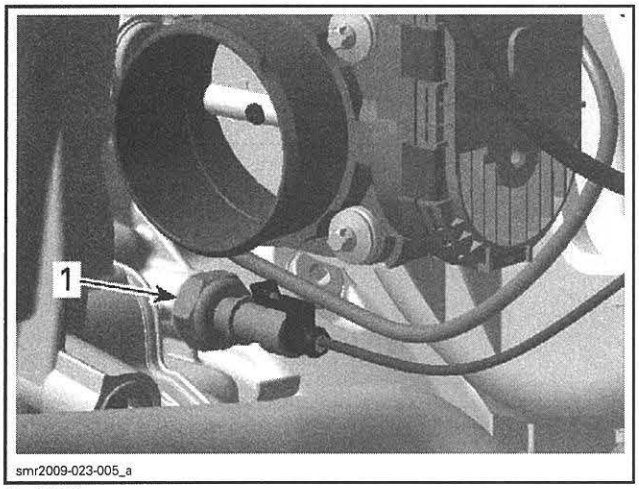

1. OPS

Oil Pressure Switch Inspection

First, carefully check the condition of the connector terminals. Clean to remove dirt and corrosion that could affect proper operation of the OPS.

IMPORTANT: Do not apply dielectric grease on terminal.

Before checking the function of the OPS, an oil pressure test has to be performed to be sure the oil pressure is not in fault. Refer to *INSPECTION* in this subsection.

When the engine oil pressure tests good but the OIL message in the information center is present and the beeper sounds:

- Ensure OPS connector is plugged to the switch.
- Check the resistance of the OPS while engine is off and while engine is running.

Oil Pressure Switch Resistance Test

Disconnect the connector from the OPS.

Use a multimeter to check the resistance as shown.

ENGINE NOT RUNNING		
TEST PROBES		RESISTANCE (Ω)
OPS connector (pin 1)	Engine ground	Close to 0 (normally closed switch)

ENGINE RUNNING		
TEST PROBES		RESISTANCE (Ω)
OPS connector (pin 1)	Engine ground	Infinitely high (OL) when pressure reaches 180 kPa (26.11 PSI) and 220 kPa (32 PSI)

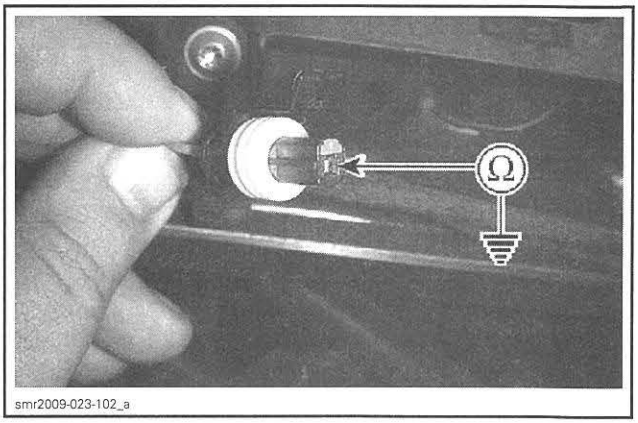

If resistance values are incorrect, replace OPS.

If the values are correct, check the continuity of the wiring harness.

Oil Pressure Switch Circuit Continuity Test

Disconnect the ECM connector "A" from the ECM.

Check continuity of OPS circuit as per following table.

REQUIRED TOOL	
ECM ADAPTER TOOL (P/N 529 036 166)	
FLUKE 115 MULTIMETER (P/N 529 035 868)	

OPS CONNECTOR	ECM ADAPTER	RESISTANCE
Pin 1	Pin E3	Close to 0 Ω (continuity)

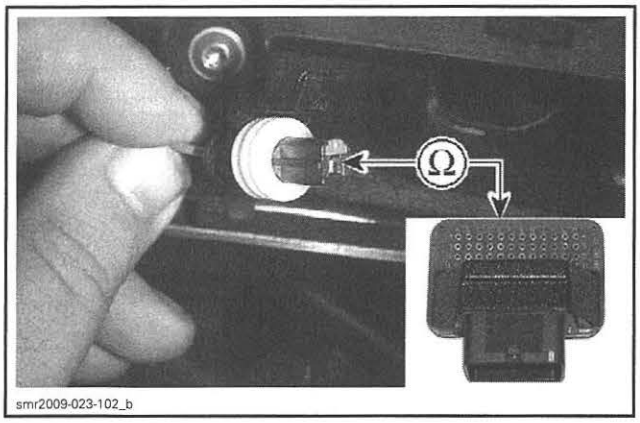

If continuity test failed, repair or replace the connector and wiring between ECM connector and OPS.

If continuity test succeeded, check the ECM. Refer to *ELECTRONIC FUEL INJECTION (EFI)* subsection.

Oil Pressure Switch Removal

155 Engine (Models with Suspension) and Supercharged Engines

Remove the throttle body. Refer to *ELECTRONIC FUEL INJECTION (EFI)* subsection.

All Models

Unplug the OPS connector.

Unscrew and remove the oil pressure switch.

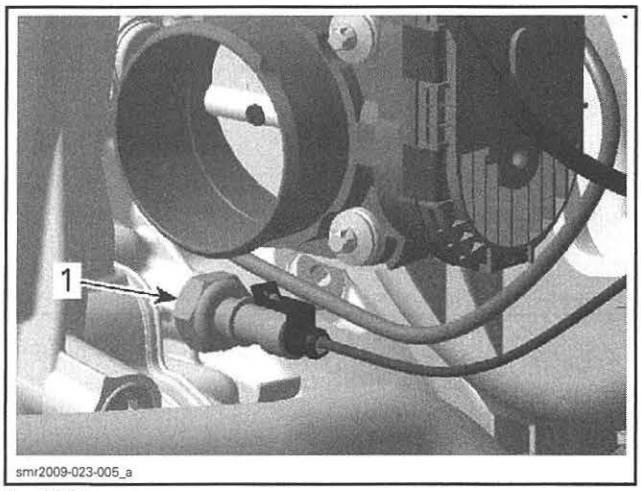

1. OPS

Oil Pressure Switch Installation

Apply LOCTITE 243 (BLUE) (P/N 293 800 060) on threads of oil pressure switch.

Torque oil pressure switch to specification.

TIGHTENING TORQUE	
Oil pressure switch	9 N•m (80 lbf•**in**)

PTO OIL STRAINER

PTO Oil Strainer Removal

Remove engine oil. See procedure in *OIL CHANGE* in this subsection.

Remove the PTO housing. Refer to *PTO HOUSING AND MAGNETO* subsection.

Remove the oil strainer.

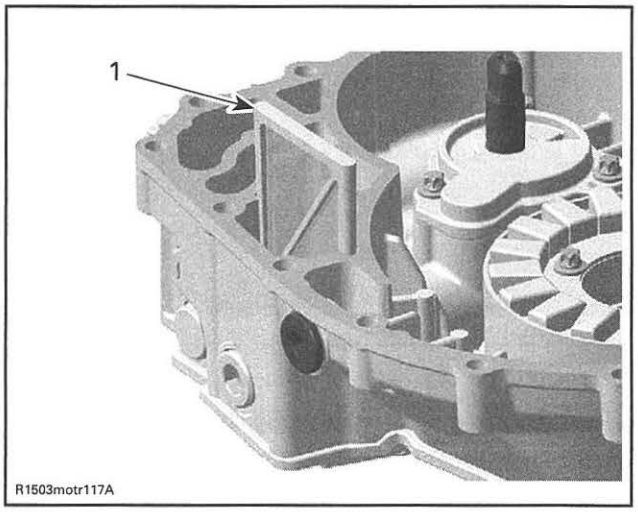

1. PTO oil strainer

PTO Oil Strainer Cleaning and Inspection

Clean oil strainer with a part cleaner then use compressed air to dry it.

Check and clean the oil outlet area for dirt and other contaminations.

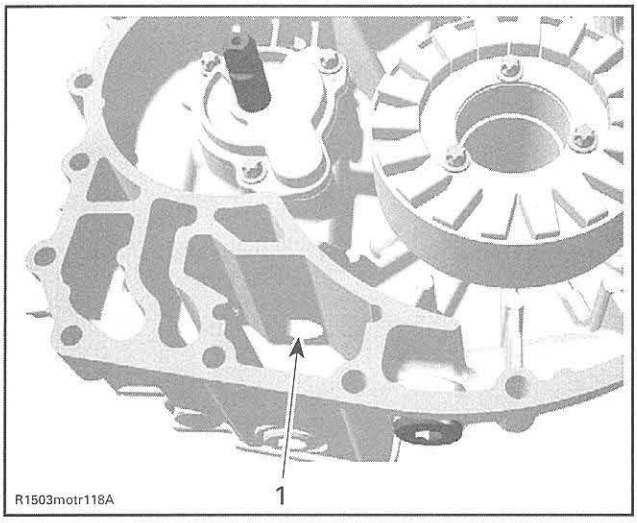

1. Oil inlet to the oil pump

PTO Oil Strainer Installation

For installation, reverse the removal procedure. However, pay attention to the following.

Clean cylinder block to remove all remaining silicone residues in oil strainer area.

Apply a thin layer of LOCTITE 5910 (P/N 293 800 081) on oil strainer side.

Install it in the PTO housing.

Install the PTO housing using the procedure described in the *PTO HOUSING AND MAGNETO* subsection.

Refill engine at the proper level with the recommended oil. Refer to *ENGINE OIL* for the procedure.

ENGINE OIL PRESSURE REGULATOR

The oil pressure regulator is located on the bottom of the PTO housing.

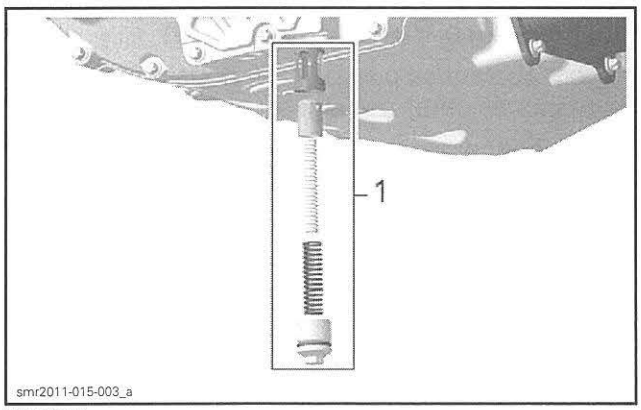

TYPICAL
1. Oil pressure regulator

NOTE: The oil pressure regulator system opens when the oil pressure exceeds 400 kPa (58 PSI).

Oil Pressure Regulator Removal

Remove engine oil. See procedure in *OIL CHANGE* in this subsection.

Remove:
- Oil pressure regulator plug
- Compression springs
- Valve piston
- Valve piston guide.

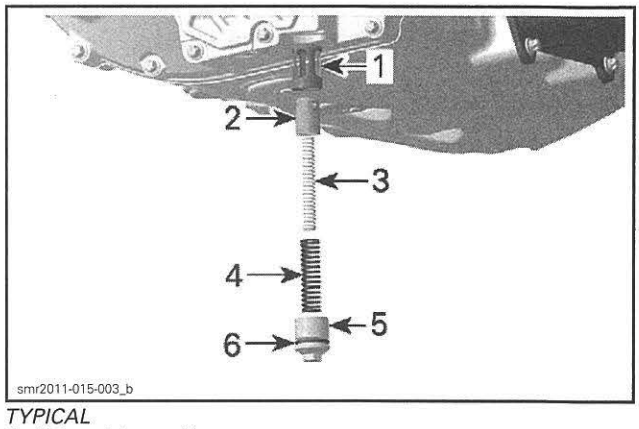

TYPICAL
1. Valve piston guide
2. Valve piston
3. Inner compression spring
4. Outer compression spring
5. Oil pressure regulator plug
6. O-ring

NOTE: Oil pressure regulator plug on oil pump housing is spring loaded.

Oil Pressure Regulator Inspection

Inspect valve piston and valve piston guide for scoring or other damages.

Check outer compression spring for free length.

OUTER COMPRESSION SPRING FREE LENGTH	
NEW NOMINAL	60 mm (2.362 in)
SERVICE LIMIT	50.3 mm (1.98 in)

Replace inner and outer compression spring as an assembly.

Replace parts if important wear or damage are present.

Clean bore and threads in the PTO housing from metal shavings and other contaminations.

Oil Pressure Regulator Installation

For installation, reverse the removal procedure. However, pay attention to the following details.

Be careful that the O-ring on plug screw is in place.

Apply LOCTITE 243 (BLUE) (P/N 293 800 060) on threads of the oil pressure regulator plug.

Torque plug screw to specification.

TIGHTENING TORQUE	
Oil pressure regulator plug	13 N•m (115 lbf•**in**)

OIL PRESSURE PUMP

The oil pressure pump is located in the PTO housing and is driven by the balance shaft.

Oil Pressure Pump Removal

1. Remove engine oil. See procedure in *OIL CHANGE* in this subsection.
2. Remove the PTO housing. Refer to *PTO HOUSING AND MAGNETO* subsection.
3. Remove water pump housing and the impeller. Refer to *COOLING SYSTEM* subsection.
4. Remove screws securing the oil pump cover.

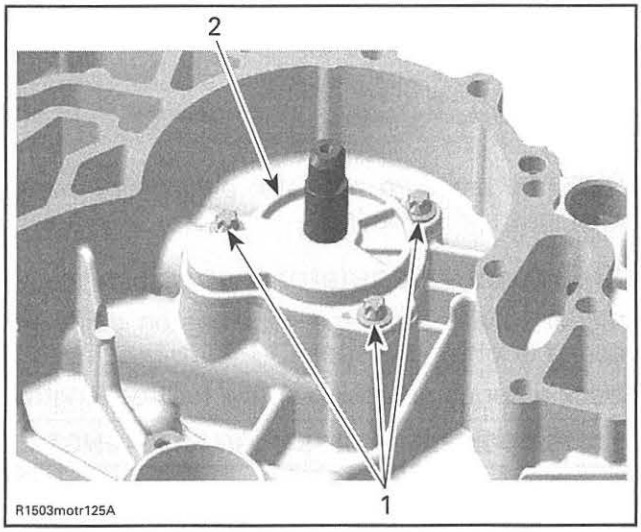

1. Screws
2. Oil pump cover

5. Pull and remove the outer oil pump rotor.

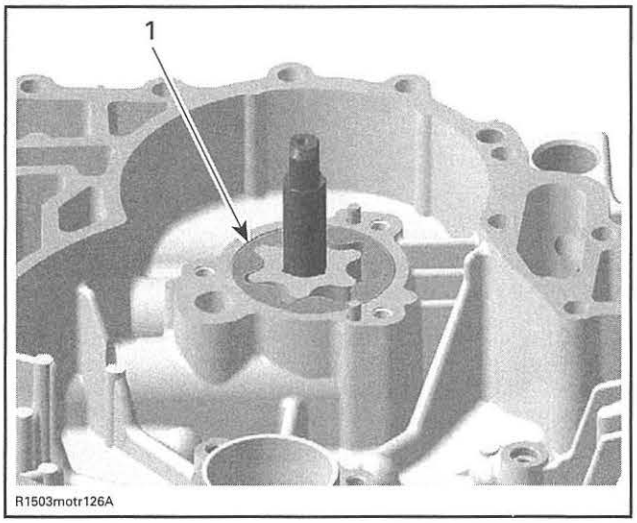

1. Outer oil pump rotor

6. Extract the coolant/oil pump shaft from outside PTO housing cover with a pusher.

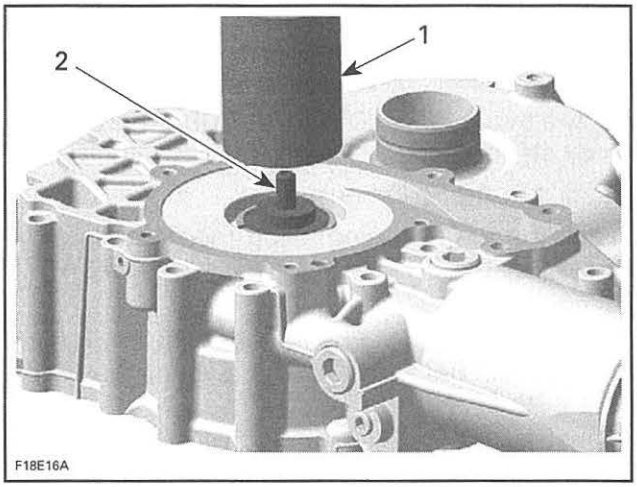

1. Pusher
2. Coolant/oil pump shaft

7. Remove rotary seal and oil seal. Refer to *ROTARY SEAL* further in this subsection.

Oil Pressure Pump Inspection

Inspect coolant/oil pump shaft, housing and cover for marks or other damages.

Check inner rotor for corrosion pin-holes or other damages. If so, replace coolant/oil pump shaft. Ensure to also check oil pump housing and cover and replace if damaged.

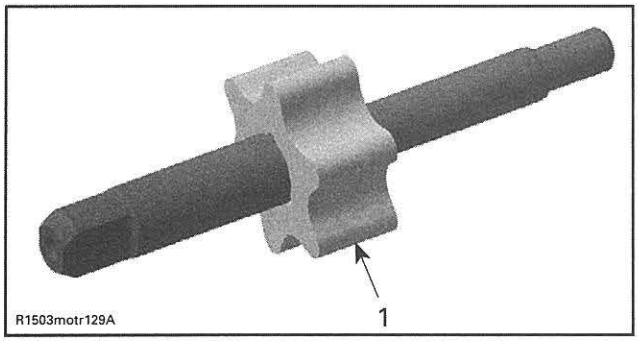

1. Pittings on the teeth

Using a feeler gauge, measure the clearance between inner and outer rotors.

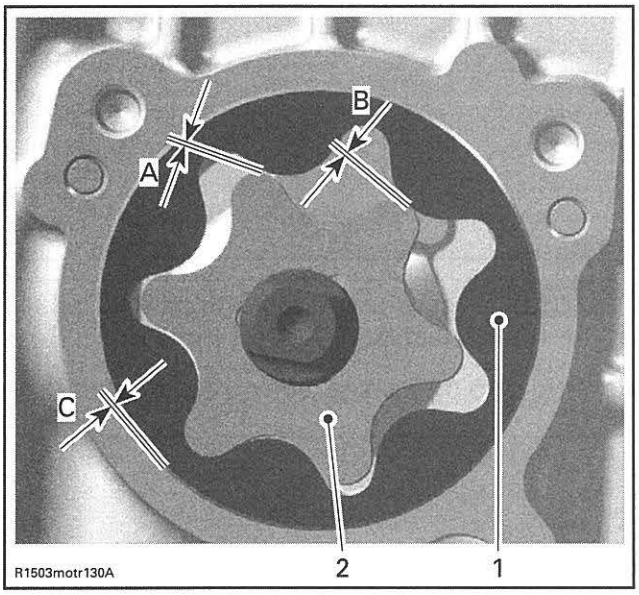

1. Outer rotor
2. Inner rotor

OUTER AND INNER ROTOR CLEARANCE	
SERVICE LIMIT	
A	0.25 mm (.0098 in)
B	
C	

If clearance between inner and outer rotors exceeds the tolerance, replace coolant/oil pump shaft. Ensure to also check oil pump housing and cover and replace if damaged.

If clearance between outer rotor and its bore in oil pump exceeds the tolerance, replace the complete oil pump and the PTO housing.

Using a vernier depth gauge, measure side wear as shown.

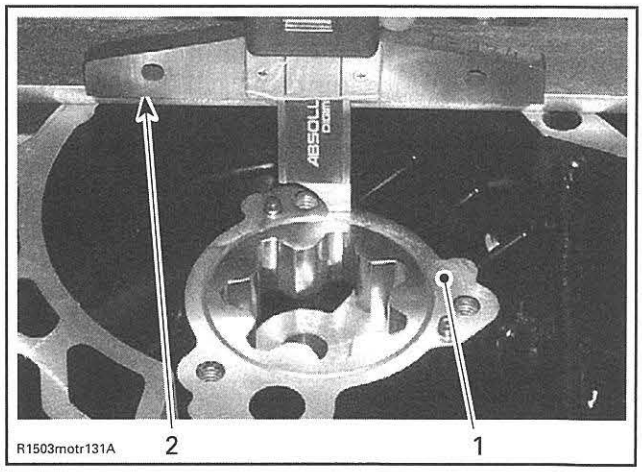

1. PTO housing surface
2. Vernier depth gauge

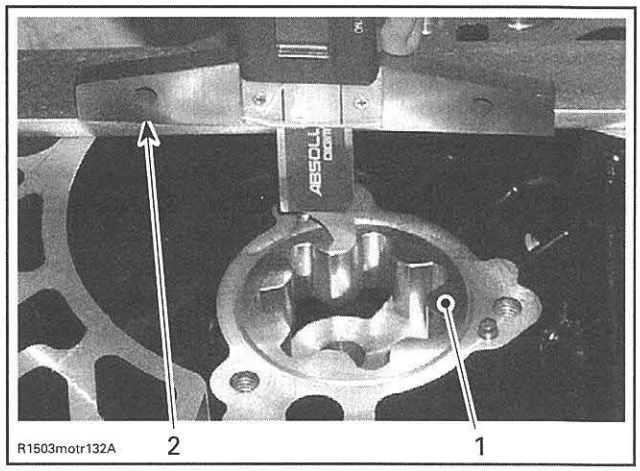

1. Oil pump outer rotor surface
2. Vernier depth gage

Clearance between pump housing and outer rotor should not exceed the following specification. If so, replace the complete oil pump assembly.

CLEARANCE BETWEEN PUMP HOUSING AND OUTER ROTOR
0.1 mm (.004 in)

NOTE: When the axial clearance of the coolant/oil pump shaft increases, the oil pressure decreases.

Check the inside of oil pump housing and its cover for scoring or other damages and replace if damaged.

Oil Pressure Pump Installation

For installation, reverse the removal procedure. Pay attention to the following details.

Install a NEW rotary seal and a NEW oil seal. Refer to *ROTARY SEAL* in this subsection.

Install the coolant/oil pump shaft.

NOTICE Never use a hammer for the coolant/oil pump shaft installation. Only use a press to avoid damaging the ceramic component of the rotary seal.

REQUIRED TOOL	
OIL SEAL GUIDE (P/N 529 035 822)	
WATER PUMP SEAL PUSHER (P/N 529 035 823)	

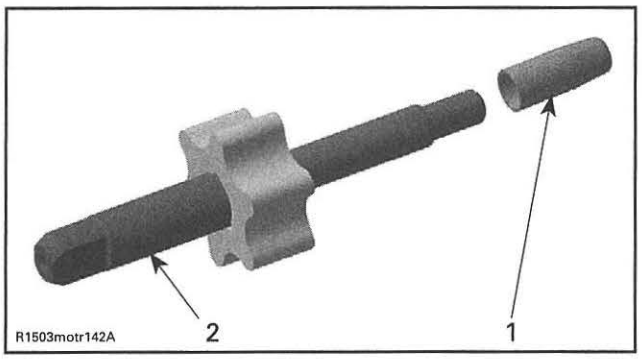

1. *Oil seal guide*
2. *Coolant/oil pump shaft*

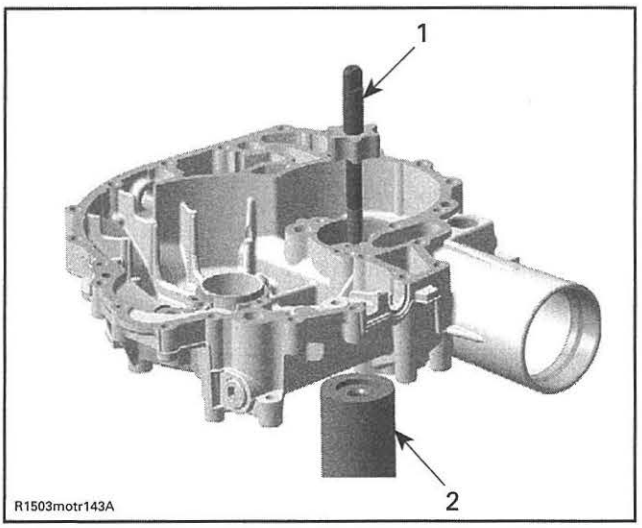

1. *Coolant/oil pump shaft with oil seal guide*
2. *Rotary seal pusher to support PTO housing*

Apply LOCTITE 243 (BLUE) (P/N 293 800 060) on threads of oil pump cover screws.

Tighten oil pump cover screws and torque to specification.

TIGHTENING TORQUE	
Oil pump cover screws	9 N•m (80 lbf•**in**)

After engine is completely reassembled, start engine and make sure oil pressure is within specifications.

ROTARY SEAL

Rotary Seal Removal

Remove the coolant/oil pump shaft. Refer to *OIL PRESSURE PUMP* in this subsection.

Carefully remove rotary seal with a screwdriver.

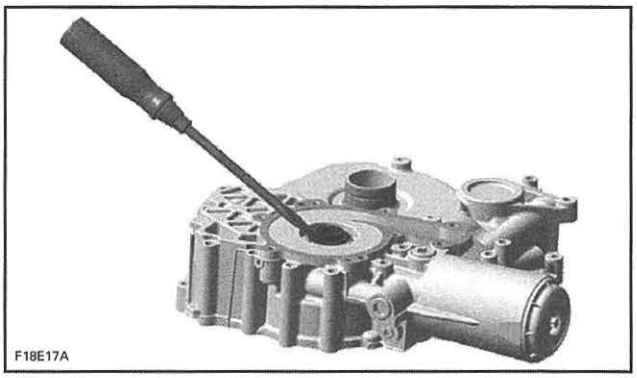

NOTICE **Be careful not to damage the surface of the rotary seal bore in PTO housing.**

Remove also the oil seal behind the rotary seal.

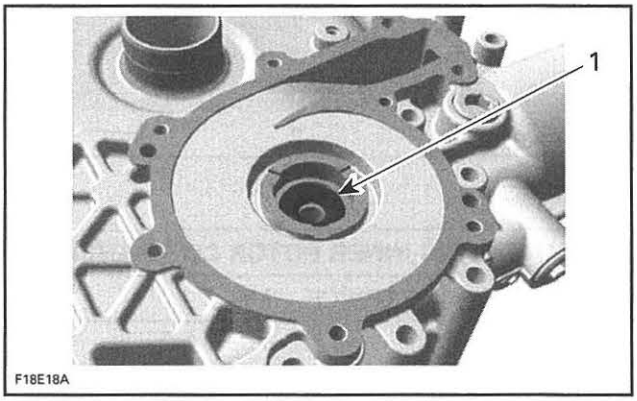

1. *Oil seal*

Discard rotary seal and oil seal.

Rotary Seal Installation

The installation is the opposite of the removal procedure. Pay attention to the following details.

NOTE: Never use oil in the press fit area of the oil seal and rotary seal.

Push the NEW oil seal in place by using thumb.

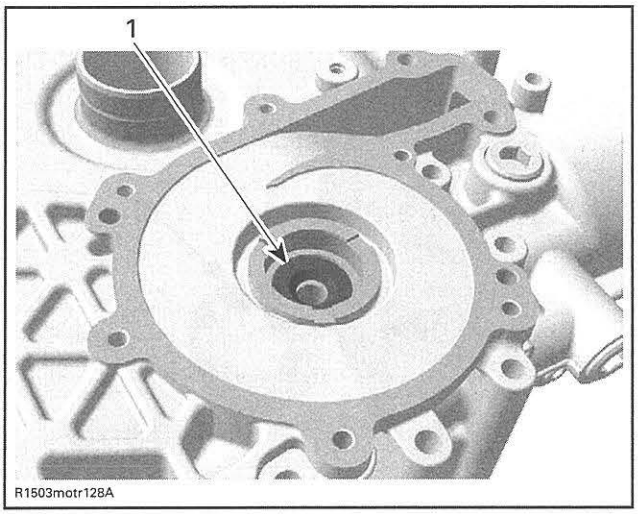

1. Oil seal

Install the **NEW** rotary seal.

REQUIRED TOOL	
WATER PUMP SEAL PUSHER (P/N 529 035 823)	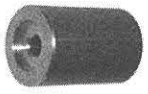

NOTICE **Never use a hammer for the rotary seal installation. Only use a press to avoid damaging the ceramic component.**

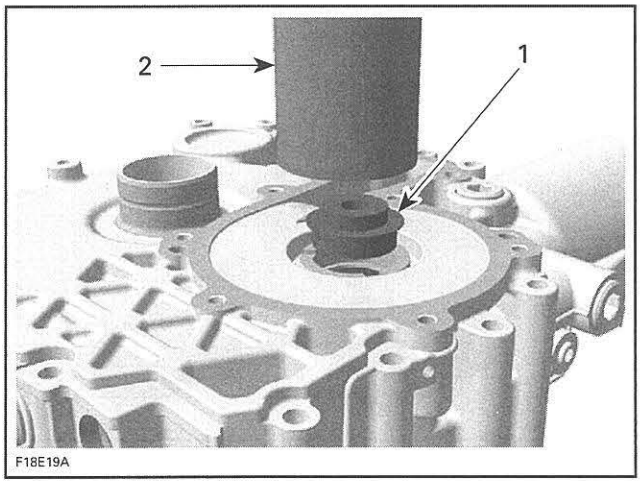

1. Rotary seal
2. Rotary seal installer

Install the coolant/oil pump shaft. Refer to *OIL PRESSURE PUMP* in this subsection.

OIL SUCTION PUMP

The oil suction pump is located on the front side of the engine inside of the oil suction pump housing at the bottom of the oil filler tube.

Oil Suction Pump Removal

Models with Suspension

1. Remove jet pump and drive shaft. Refer to *STEERING AND PROPULSION* section.
2. Remove the moving deck. Refer to *BODY (GTX, RXT AND WAKE PRO)* subsection.
3. Remove the air intake silencer. Refer to *AIR INTAKE SYSTEM (MODELS WITH SUSPENSION)* subsection.
4. Detach the muffler from the exhaust manifold and move muffler backwards. Refer to *EXHAUST SYSTEM* subsection.
5. Remove engine support mount screws.
6. Move engine backwards, just enough to reach oil suction pump cover screws.

All Models

1. Remove retaining screws from oil filler tube.

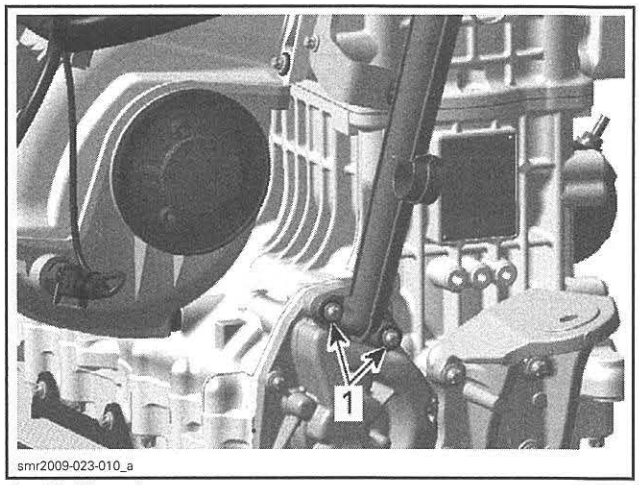

1. Oil filler tube screws

2. Remove oil filler tube.
3. Remove retaining screws.

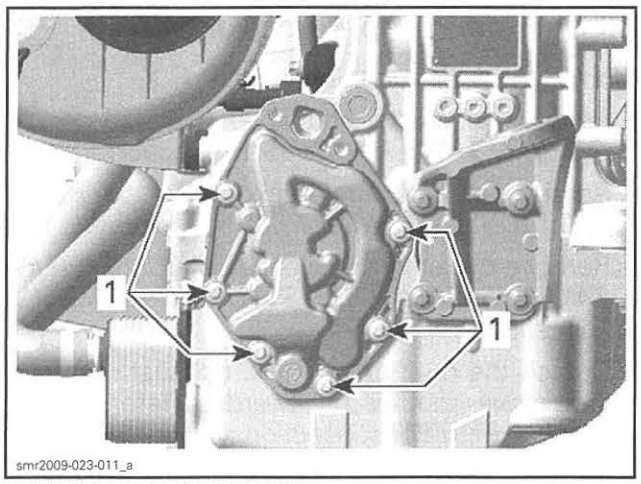

1. Suction pump cover screws

4. Place rags under cover to prevent spillage. If spillage occurs, clean with the PULLEY FLANGE CLEANER (P/N 413 711 809).
5. Remove the oil suction pump housing.
6. Remove oil pump screws and cover.

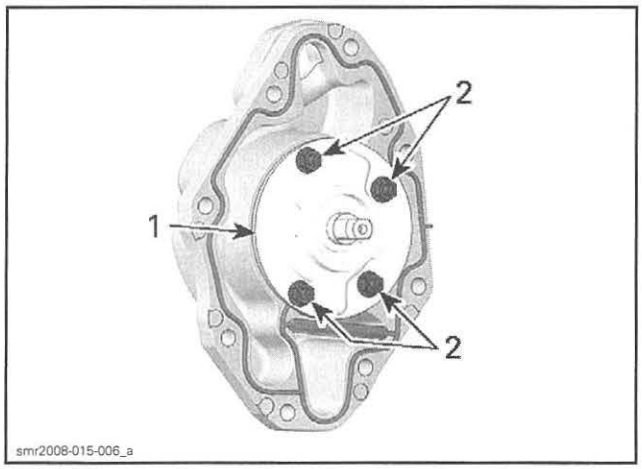

TYPICAL
1. Oil pump cover
2. Oil pump screws

7. Remove oil pump shaft.
8. Remove outer rotor.

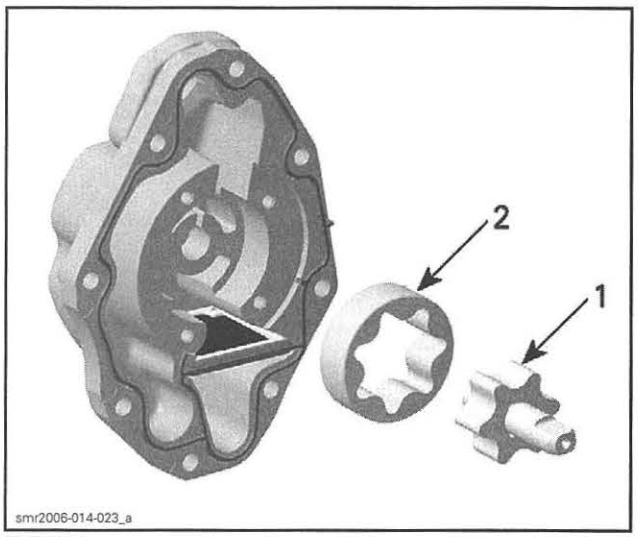

TYPICAL
1. Oil pump shaft
2. Outer rotor

9. Remove oil strainer and cover gasket.

Oil Suction Pump Inspection

Inspect oil pump shaft, housing and cover for marks or other damages.

Check inner rotor for corrosion, pin-holes or other damages. If so, replace oil pump shaft. Ensure to also check oil pump housing and cover and replace if damaged.

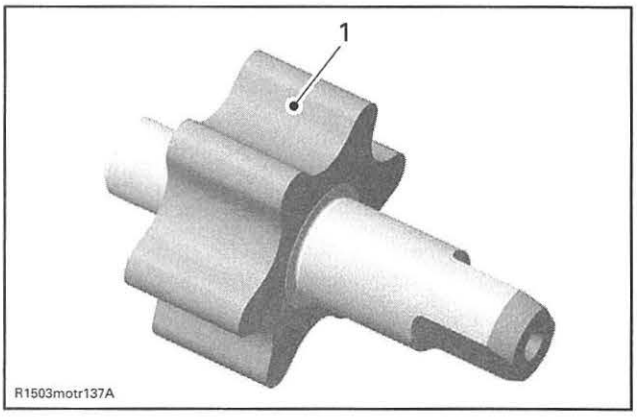

1. Pittings on the teeth

Using a feeler gauge, measure the clearance between inner and outer rotors.

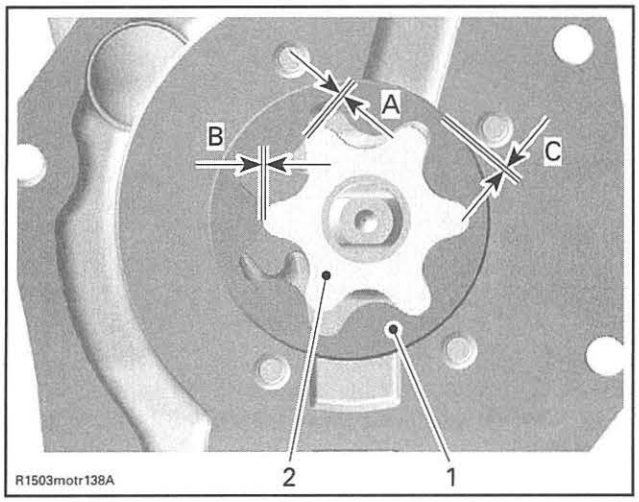

1. *Outer rotor*
2. *Inner rotor*

OUTER AND INNER ROTOR CLEARANCE	
SERVICE LIMIT	
A	0.25 mm (.0098 in)
B	
C	

If clearance between inner and outer rotors exceeds the tolerance, replace oil pump shaft. Ensure to also check oil pump housing and cover and replace if damaged.

If clearance between outer rotor and its bore in oil pump exceeds the tolerance, replace the complete oil pump and the PTO housing.

Using a vernier depth gage, measure side wear as shown.

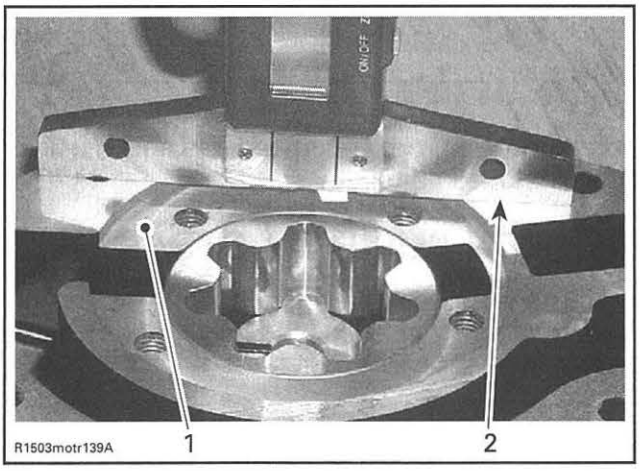

1. *Oil pump housing surface*
2. *Vernier depth gage*

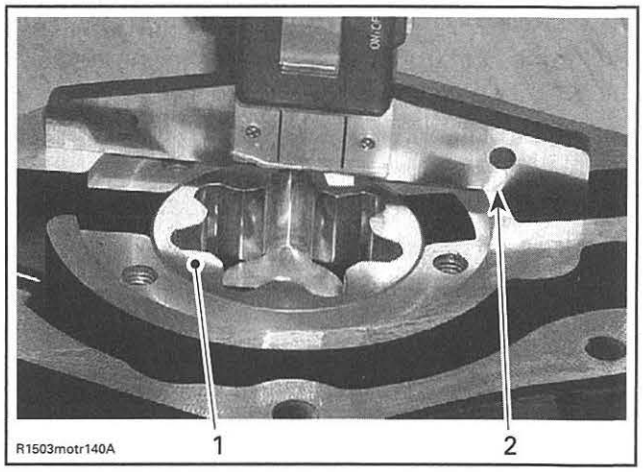

1. *Oil pump outer rotor surface*
2. *Vernier depth gage*

Clearance between pump housing and outer rotor should not exceed the following specification. If so, replace the complete oil pump assembly.

CLEARANCE BETWEEN PUMP HOUSING AND OUTER ROTOR
0.1 mm (.004 in)

NOTE: When the axial clearance of the oil pump shaft assembly increases, the oil pressure decreases.

Check the inside of oil pump housing and its cover for scoring or other damages and replace if damaged.

Inspect rubber ring gaskets.

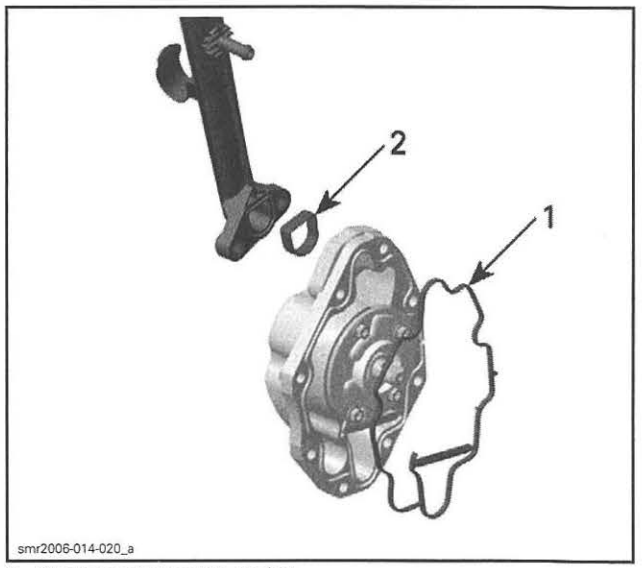

1. *Suction pump cover gasket*
2. *Oil filler tube gasket*

If rubber rings are brittle, cracked or hard, replace them.

Oil Suction Pump Installation

For installation, reverse the removal procedure. Pay attention to the following details.

Clean both contact surfaces of oil suction pump cover.

Check and clean the oil inlet and outlet area for dirt and other contaminations.

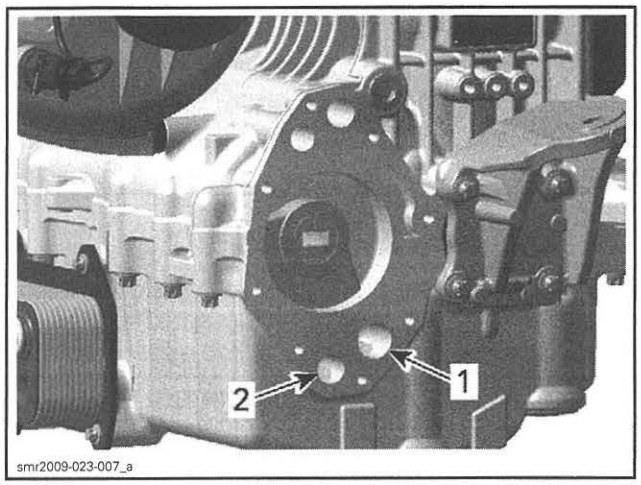

1. Oil inlet
2. Oil outlet

Make sure oil strainer is properly installed in the oil suction pump cover.

Apply engine oil on both rubber ring gaskets.

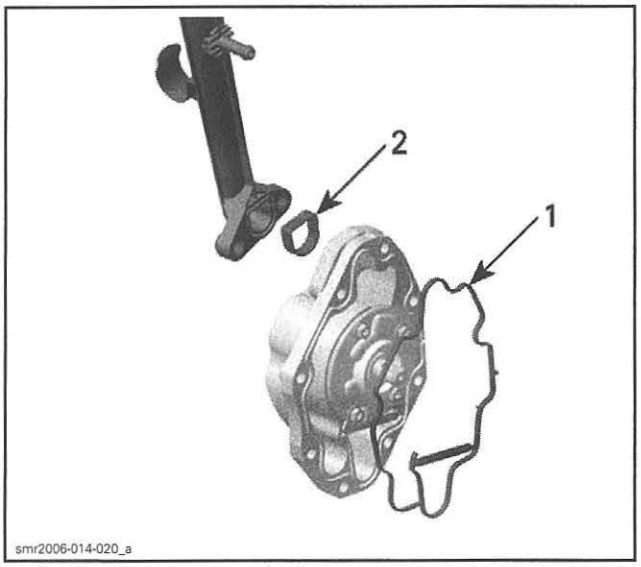

1. Suction pump cover gasket
2. Oil filler tube gasket

Apply LOCTITE 243 (BLUE) (P/N 293 800 060) on threads of the suction pump cover screws.

Position screws according to their length as shown.

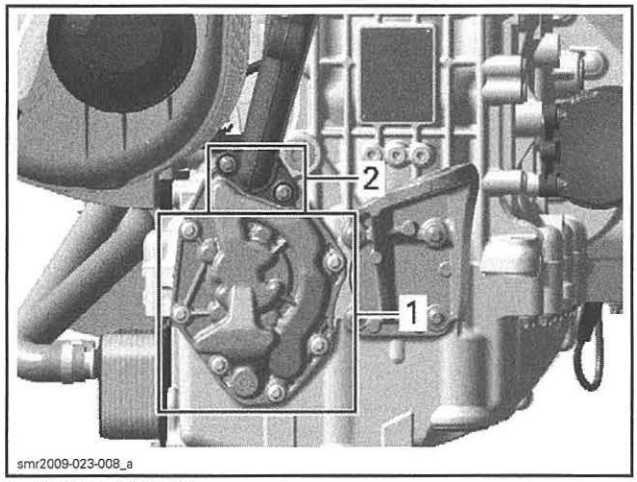

1. Screws M6 x 25
2. Screws M6 x 45

Tighten suction pump cover screws as per following sequence.

TIGHTENING TORQUE	
Suction pump cover screws	9 N•m (80 lbf•**in**)

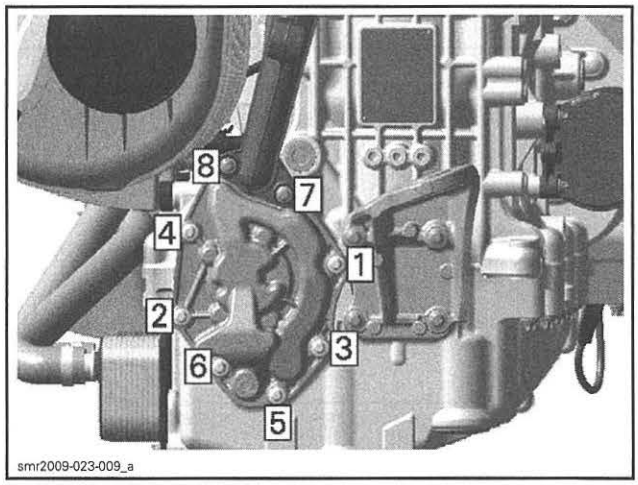

TIGHTENING SEQUENCE

Refer to the appropriate procedures and install all other removed parts.

SUCTION PUMP OIL STRAINER

NOTE: The oil strainer does not need to be cleaned at every oil change. Clean it during other inspections, especially when the engine is disassembled.

Suction Pump Oil Strainer Removal

Remove the oil suction pump cover as explained in *OIL SUCTION PUMP REMOVAL*

Remove oil strainer from the suction pump cover.

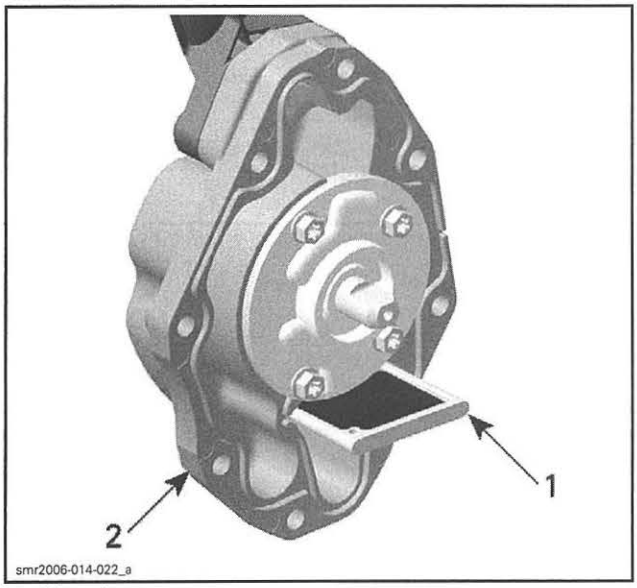

1. Oil strainer
2. Suction pump cover

Suction Pump Oil Strainer Inspection

Clean oil strainer with a part cleaner then use compressed air to dry it.

Check oil strainer for tear or other damages. Replace it if necessary.

Suction Pump Oil Strainer Installation

For installation of the suction pump cover, refer to *OIL SUCTION PUMP* in this subsection.

SUPERCHARGER OIL SPRAY NOZZLE

Supercharger Oil Spray Nozzle Removal

Remove the PTO housing. Refer to *PTO HOUSING AND MAGNETO* subsection.

Remove the Torx screw securing the oil spray nozzle support.

Unscrew the Banjo bolt.

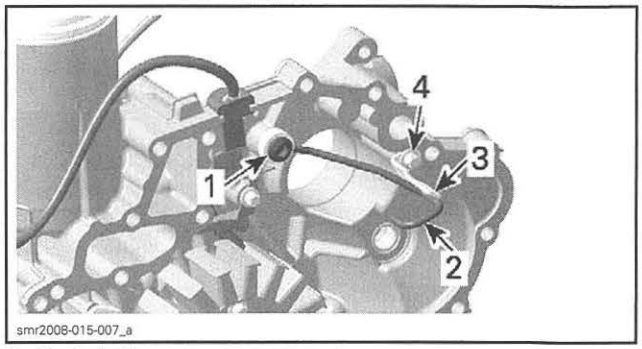

1. Banjo bolt
2. Supercharger oil spray nozzle
3. Oil spray nozzle support
4. Torx screw

Supercharger Oil Spray Nozzle Inspection

Check oil spray nozzle for:
- Dirt
- Bend
- Other damages.

Replace if necessary.

Supercharger Oil Spray Nozzle Installation

For installation reverse the removal procedure. However, pay attention to the following.

Apply LOCTITE 243 (BLUE) (P/N 293 800 060) on threads of Torx screw.

Install the oil spray nozzle support.

TIGHTENING TORQUE	
Oil spray nozzle support (Torx screw)	11 N•m (97 lbf•**in**)

Install oil spray nozzle with Banjo bolt.

TIGHTENING TORQUE	
Oil spray nozzle Banjo bolt	19 N•m (168 lbf•**in**)

Adjust the position of the oil spray nozzle.

REQUIRED TOOL	
SUPERCHARGER OIL SPRAY NOZZLE TOOL (P/N 529 036 134)	

The distance between the adjustment tool and oil spray nozzle must be within 1 mm (.039 in).

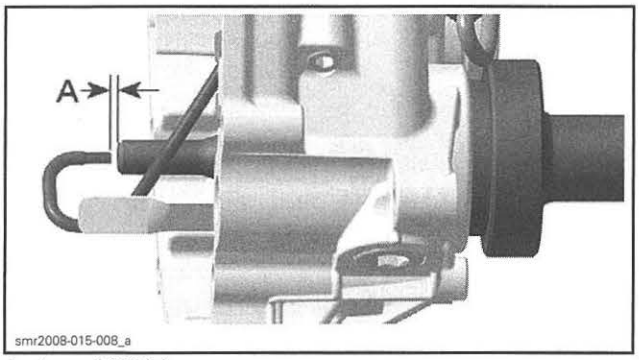

A. 1 mm (.039 in)

NOTE: Make sure that the oil spray nozzle is facing to the center of the tool. Not following this procedure will lead to an insufficient oiling of the supercharger and a supercharger failure can occurs. Adjust the oil spray nozzle if necessary by slightly bending it, take care not to over bend the oil spray nozzle.

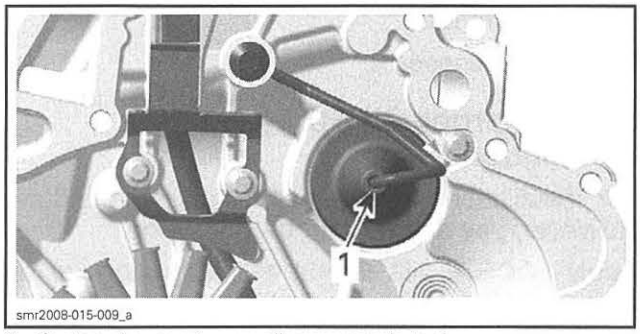

1. Center of supercharger oil spray nozzle tool

PISTON OIL SPRAY NOZZLES

The piston oil spray nozzles are located on the upper half of cylinder block.

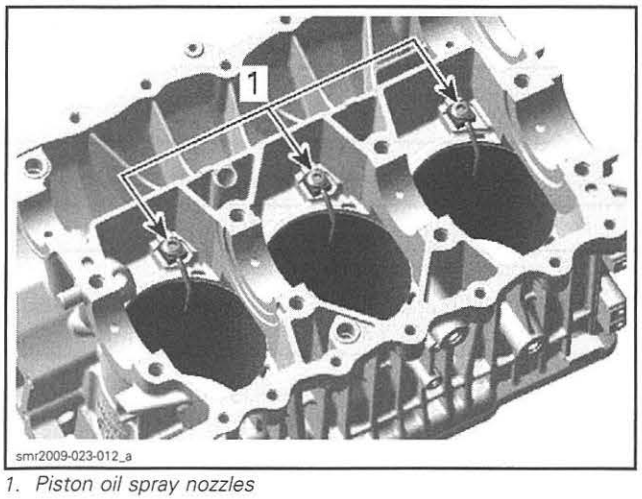

1. Piston oil spray nozzles

NOTE: When the scope of repair work obligates you to split the cylinder block, take this opportunity to clean the oil spray nozzles.

Piston Oil Spray Nozzle Removal

Remove cylinder block lower half. Refer to *CYLINDER BLOCK* subsection.

Remove oil spray nozzle and Banjo fitting from cylinder block upper half.

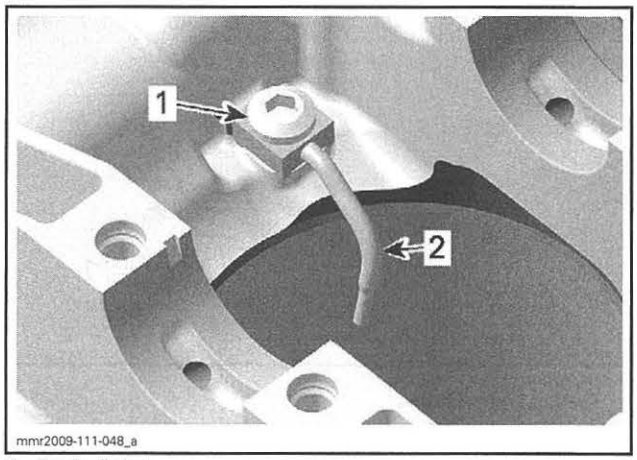

1. Banjo fitting
2. Oil spray nozzle

Piston Oil Spray Nozzle Cleaning and Inspection

Clean oil spray nozzle and Banjo fitting from dirt and debris. Use a part cleaner, then compressed air and dry the parts.

Check if ball inside Banjo fitting moves freely.

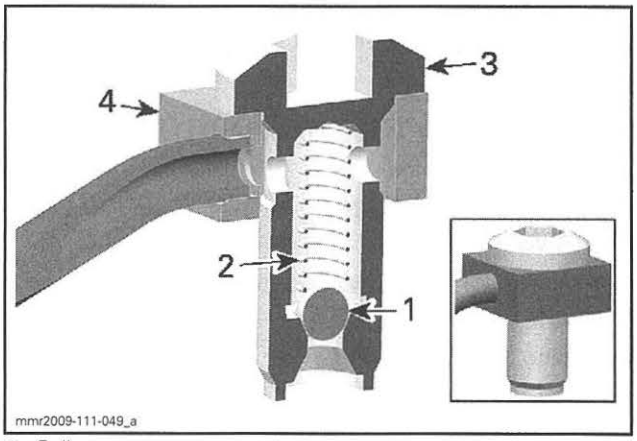

1. Ball
2. Spring
3. Banjo fitting
4. Oil spray nozzle

NOTE: If the oil spray nozzle is damaged or bent during work in the cylinder block, it must be replaced immediately.

Piston Oil Spray Nozzle Installation

NOTICE **At assembly make sure the contact surface of the oil spray nozzle is well fitted onto the cylinder block. If this is not ensured, the oil spray direction will change, causing potential engine damage.**

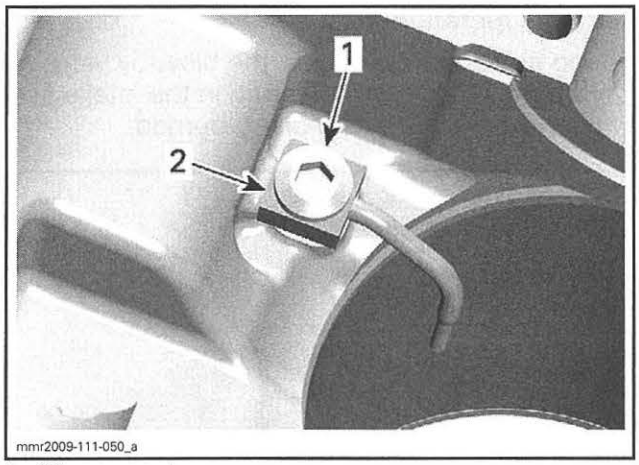

1. Oil spray nozzle
2. Contact surface

OIL SEPARATOR COVER

Oil Separator Cover Removal

1. Remove the blow-by valve. See procedure in this subsection.
2. Remove camshaft position sensor.

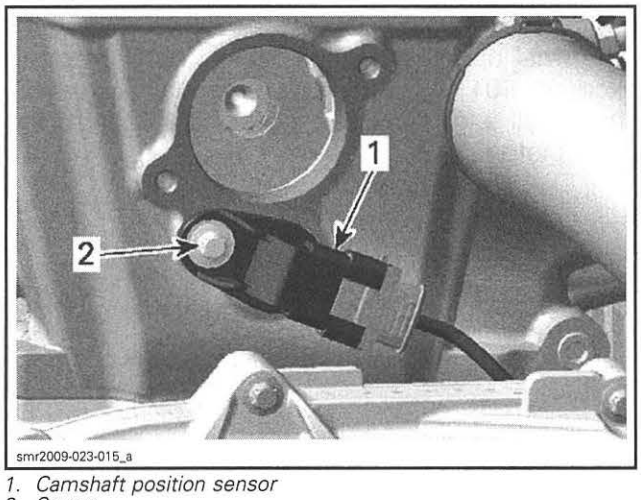

1. Camshaft position sensor
2. Screw

3. Remove cylinder head cover, refer to *CYLINDER HEAD* subsection.
4. Remove thrust washer from oil separator cover.

NOTE: Make sure not to loose thrust washer when removing it from oil separator cover, otherwise thrust washer would fall into the PTO housing.

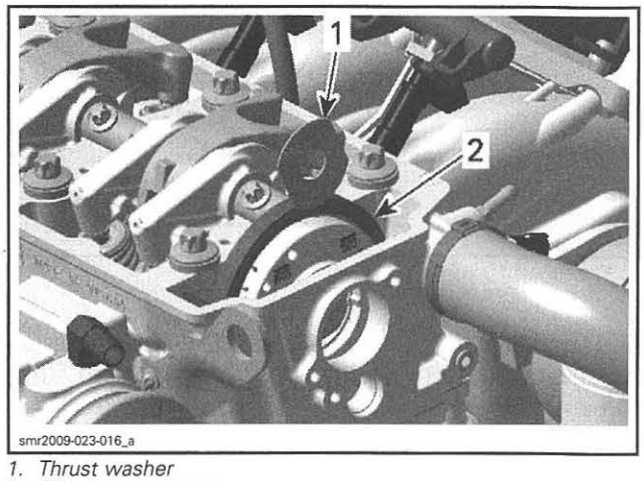

1. Thrust washer
2. Oil separator cover

5. Remove spark plug tube.
6. Remove rocker arm shaft together with rocker arms, refer to *CYLINDER HEAD* subsection.
7. Remove chain guide and camshaft guide.

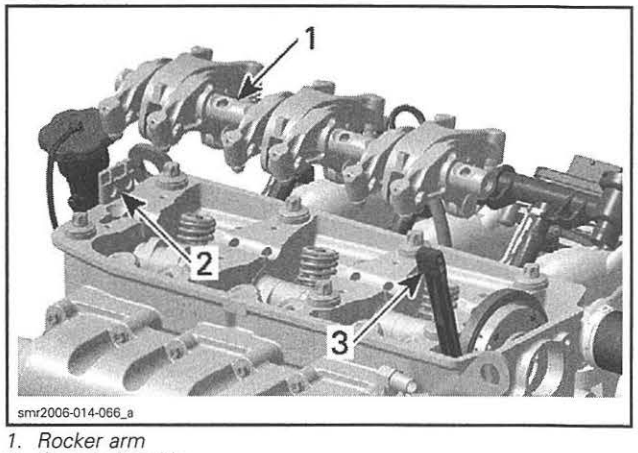

1. Rocker arm
2. Camshaft guide
3. Chain guide

8. Move camshaft backwards as far as possible.
9. Remove oil separator cover from timing gear by releasing the holding clips.

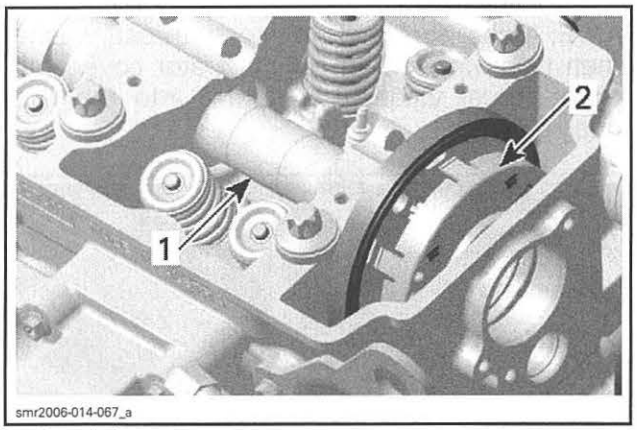

1. *Camshaft*
2. *Oil separator cover*

NOTE: Be careful not to break the holding clips from oil separator cover when its removed from the timing gear.

Oil Separator Cover Inspection

Inspect oil separator cover for marks or other damages. Ensure to check also the holding clips of oil separator cover and for thrust washer. If any damage is visible replace oil separator cover.

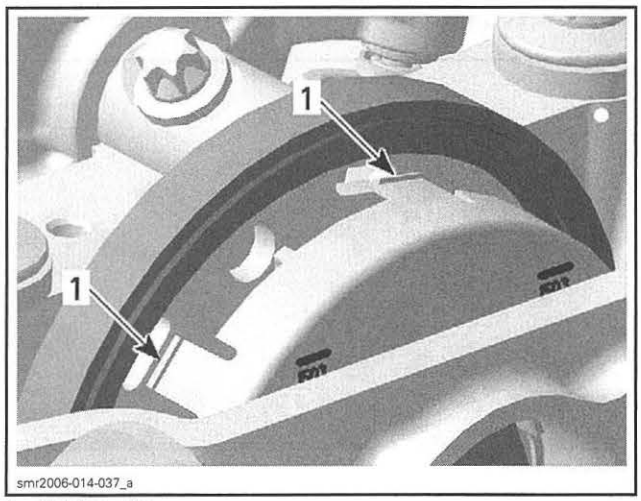

1. *Holding clips*

Oil Separator Cover Installation

For installation, reverse the removal procedure. Pay attention to the following details.

Properly install oil separator cover and thrust washer. They need to be in a perfect even position with timing gear.

NOTE: Make sure not to lose thrust washer when installed on oil separator cover.

For installation of rocker arm shaft with rocker arms, follow the procedure as it is described in *CYLINDER HEAD* subsection.

Install all other removed parts.

BLOW-BY VALVE

Blow-By Valve Description

The function of the blow-by valve is the circulation of the oil vapors.

Blow-By Valve Operation

Normal Operation

During its normal operation, the blow-by valve allows crankcase vapors to return in the intake system where they are harmlessly burned.

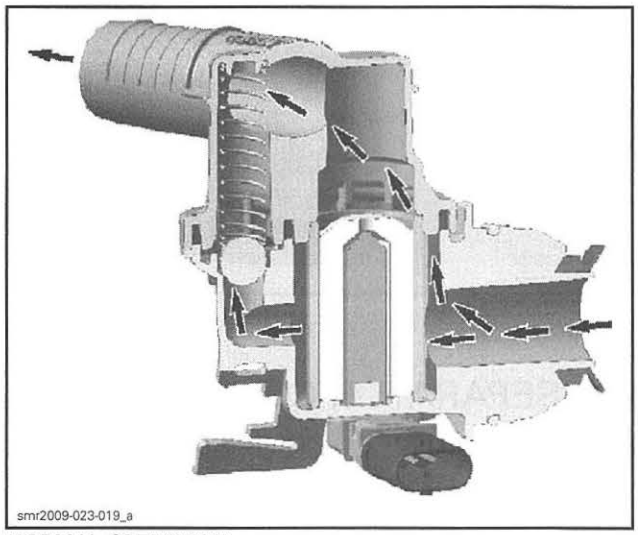

NORMAL OPERATION

By-Pass Function

If, for any reason, the valve piston gets stuck at normal operation and the crankcase pressure exceeds 40 kPa (6 PSI), the pressure unseats a check ball and crankcase vapors can bypass the valve piston.

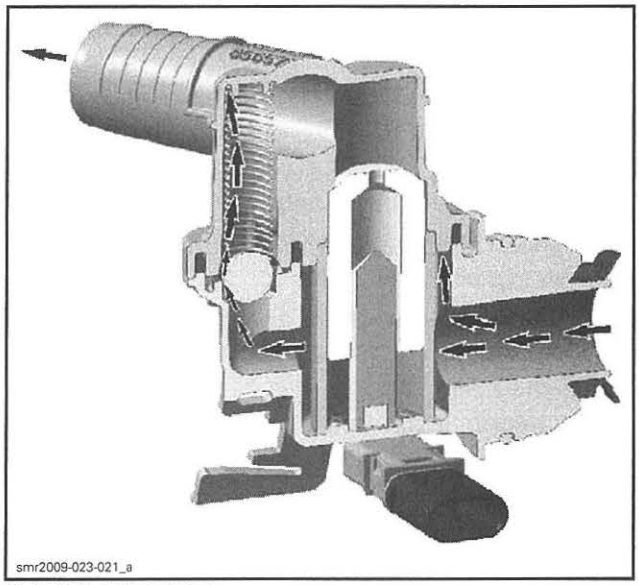

BY-PASS FUNCTION

Blow-By Valve Removal

Models with Suspension

Remove:

- Deck extension, refer to *BODY (GTX, RXT AND WAKE PRO)* subsection
- Air intake silencer, refer to *AIR INTAKE SYSTEM (MODELS WITH SUSPENSION)* subsection.

All Models

Remove ventilation hose from blow-by valve.

Remove the CPS connector from its support on blow-by valve.

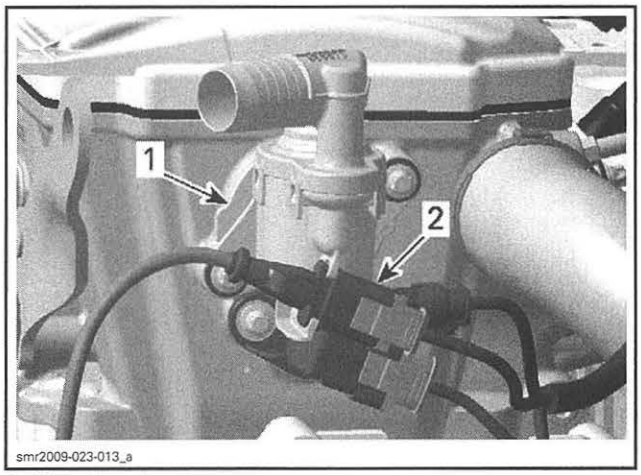

1. *Blow-by valve*
2. *CPS connector*

Disconnect the TOPS switch connector of the blow-by valve.

Unscrew and remove the blow-by valve.

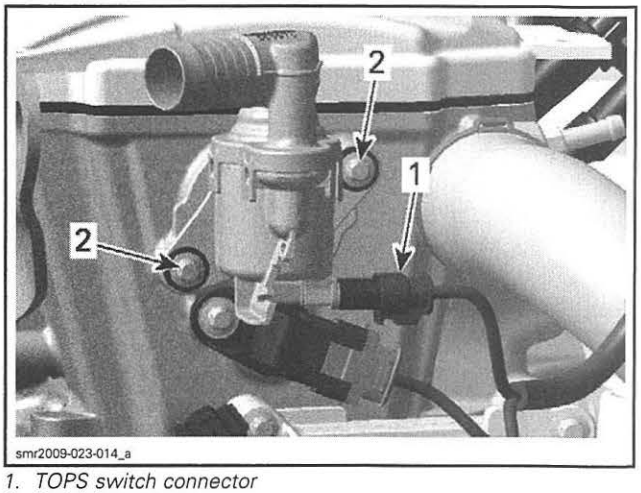

1. *TOPS switch connector*
2. *Retaining screws*

Remove and discard O-ring and V-ring.

NOTE: The blow-by valve can not be disassembled.

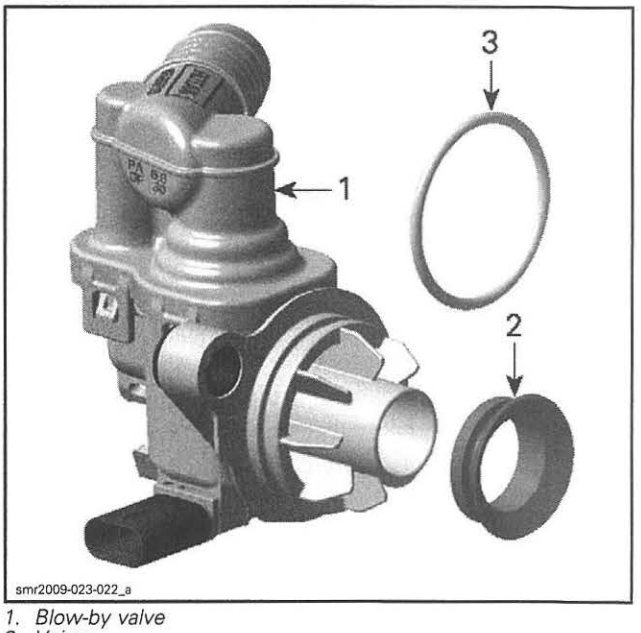

1. *Blow-by valve*
2. *V-ring*
3. *O-ring*

Blow-By Valve Inspection

If blow-by valve is damaged, replace it.

Clean all contact surfaces of blow-by valve.

Place a clean rag on valve inlet.

Blow air through inlet port. Air must flow freely to the outlet port.

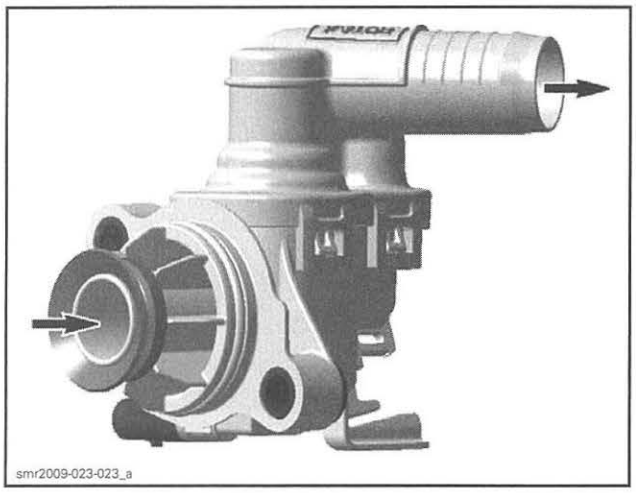
smr2009-023-023_a

Turn valve upside down and blow air again. Air must not flow out.

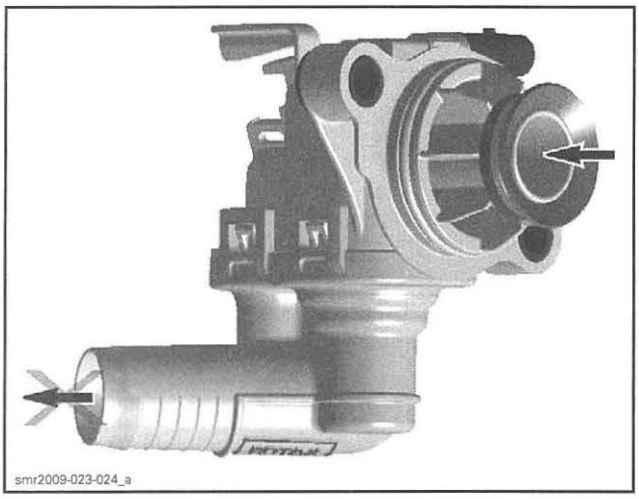
smr2009-023-024_a

If test fails, replace blow-by valve.

Blow-By Valve Installation

The installation is the reverse of the removal procedure. However, pay attention to the following.

Install the blow-by valve with **NEW** O-ring and V-ring.

Apply LOCTITE 243 (BLUE) (P/N 293 800 060) on threads of blow-by valve screws.

Tighten blow-by valve screws to specification.

TIGHTENING TORQUE	
Blow-by valve screws	9 N•m (80 lbf•**in**)

Reinstall remaining removed parts.

TOPS SWITCH

Tip Over Protection Switch (TOPS Switch) Function

The function of the TOPS switch is the engine protection in the event the watercraft tip over.

During normal operation the TOPS switch state is OFF, no signal to the ECM.

If the watercraft tips over, gravity causes a valve piston to close and no engine oil will leak out of the blow-by valve.

In this event, a pin (with magnet) opens a gap to the TOPS switch (Hall effect sensor) and the TOPS changes its state to ON and sends a signal to the ECM.

The ECM will shut down the engine by cutting the ignition and the fuel injection.

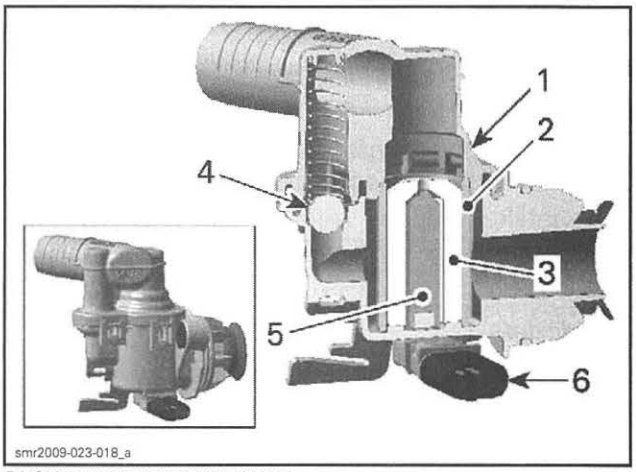

smr2009-023-018_a

BLOW-BY VALVE CUT-AWAY
1. *Valve housing*
2. *Valve sleeve*
3. *Valve piston*
4. *Check ball*
5. *Valve pin (with magnet)*
6. *TOPS switch of the blow-by valve*

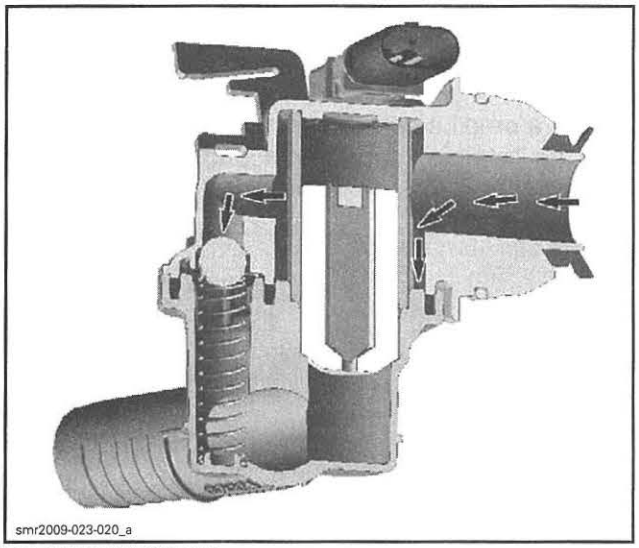
smr2009-023-020_a

TIP OVER FUNCTION

TOPS Switch Input Voltage Test

Models with Suspension

Remove:

- Deck extension, refer to *BODY (GTX, RXT AND WAKE PRO)* subsection.
- Air intake silencer, refer to appropriate *AIR INTAKE SYSTEM* subsection.

All Models

Disconnect the TOPS switch connector of the blow-by valve.

Briefly press the START/STOP button to wake-up the ECM.

Probe terminals as shown to check the voltage output from the ECM.

TOPS SWITCH CONNECTOR	VOLTAGE
Pins 2 and 3	Approximately 5 Vdc

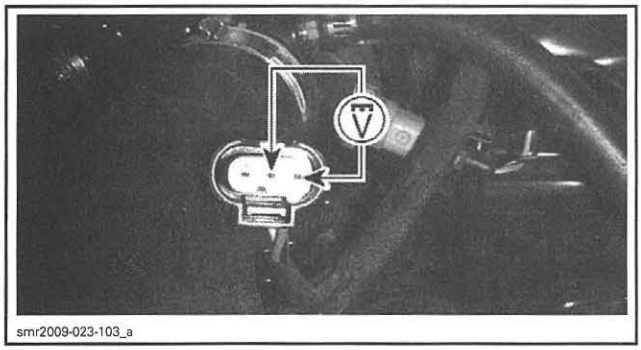
smr2009-023-103_a

If voltage test is good, check the TOPS switch output voltage.

If voltage test is not good, check the continuity of the blow-by valve TOPS switch circuit.

NOTE: After voltage test, clear the fault codes in the ECM using the B.U.D.S. software.

TOPS Switch Output Voltage Test

Remove the blow-by valve.

Back-probe TOPS connector and check voltage.

REQUIRED TOOL	
FLUKE 115 MULTIMETER (P/N 529 035 868)	

NOTE: To easily probe wire terminals through the back of the connector, use the BACK PROBE TEST WIRES (P/N 529 036 063) or an equivalent.

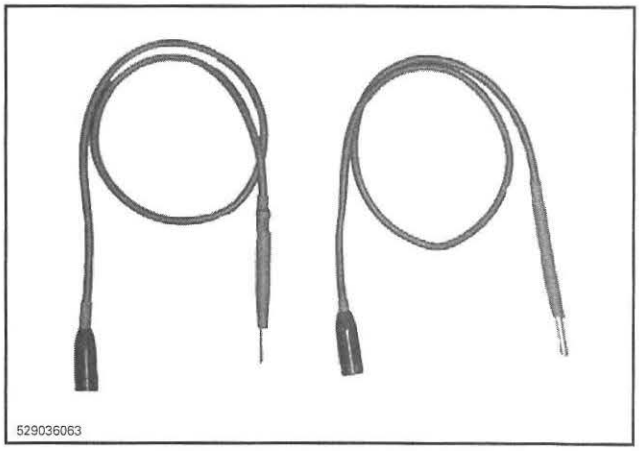
529036063

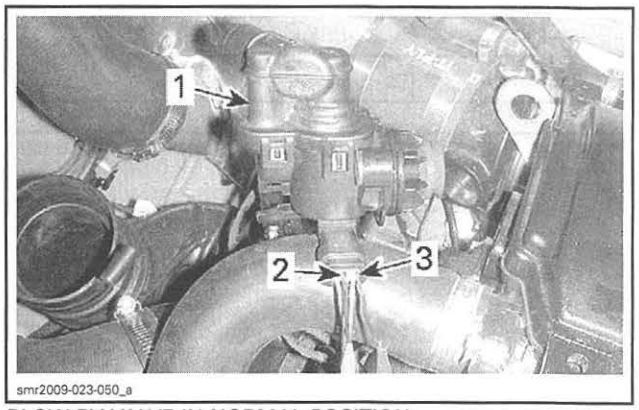

smr2009-023-050_a

BLOW-BY VALVE IN NORMAL POSITION
1. *Blow-by valve*
2. *RED probe into pin 2*
3. *BLACK probe into pin 1*

TOPS SWITCH CONNECTOR	BLOW-BY VALVE POSITION	VOLTAGE
Pin 1 and pin 2	Normal position	0.4 ± 0.1 Vdc
Pin 1 and pin 2	Upside down	4.4 ± 0.2 Vdc
Pin 2 and pin 3	Normal position or upside down	Approximately 5 Vdc

Replace TOPS switch if not within specification.

TOPS Switch Circuit Continuity Test

Disconnect the TOPS switch connector of the blow-by valve.

Disconnect the connector "A" from the ECM.

Check continuity of the blow-by valve TOPS switch circuit as per following table.

REQUIRED TOOL	
ECM ADAPTER TOOL (P/N 529 036 166)	
FLUKE 115 MULTIMETER (P/N 529 035 868)	

TOPS SWITCH CONNECTOR	ECM ADAPTER	RESISTANCE
Pin 1	Pin F4	Close to 0 Ω (continuity)
Pin 2	Pin G1	
Pin 3	Pin C4	

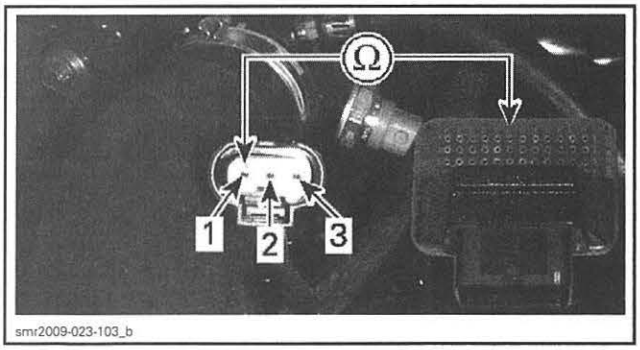

smr2009-023-103_b

1. *Pin 1*
2. *Pin 2*
3. *Pin 3*

If continuity test is good, check ECM. Refer to *ELECTRONIC FUEL INJECTION (EFI)* subsection.

If continuity test is not good, repair or replace defective wires or connectors.

TOPS Switch Replacement

Remove blow-by valve and turn it upside down.

Insert a small screwdriver between TOPS switch and its retaining tab. Twist and hold the TOPS switch then release the other retaining tab.

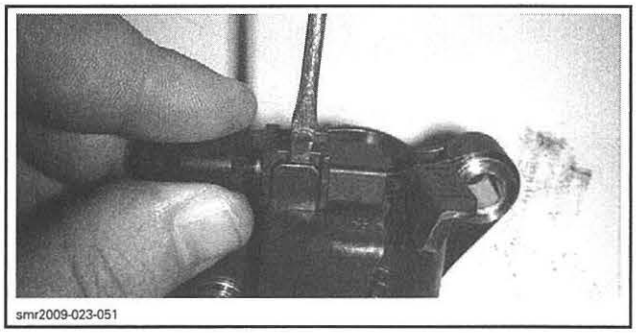
smr2009-023-051

When installing the TOPS switch, make sure printed information is visible.

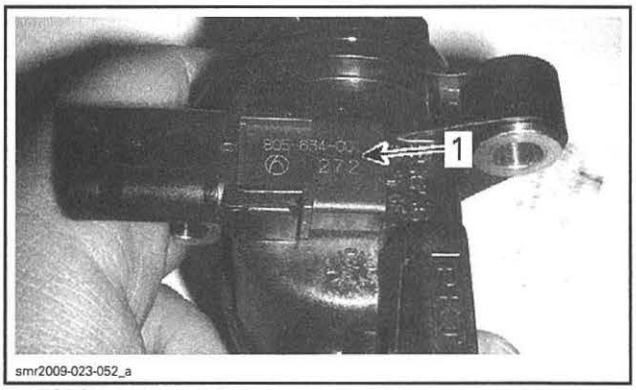

smr2009-023-052_a

1. *TOPS valve inscriptions*

OIL COOLER

The oil cooler is located below the air intake manifold.

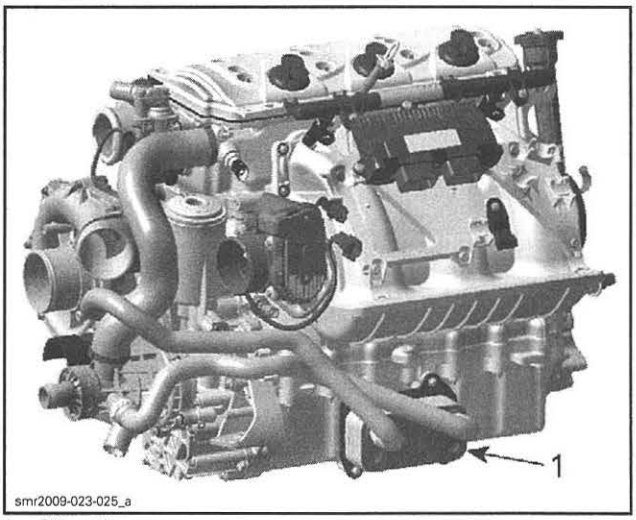

smr2009-023-025_a

1. *Oil cooler*

Oil Cooler Removal

Remove engine from vehicle. Refer to *ENGINE REMOVAL AND INSTALLATION* subsection.

Disconnect cooling hoses from oil cooler.

Remove screws securing oil cooler.

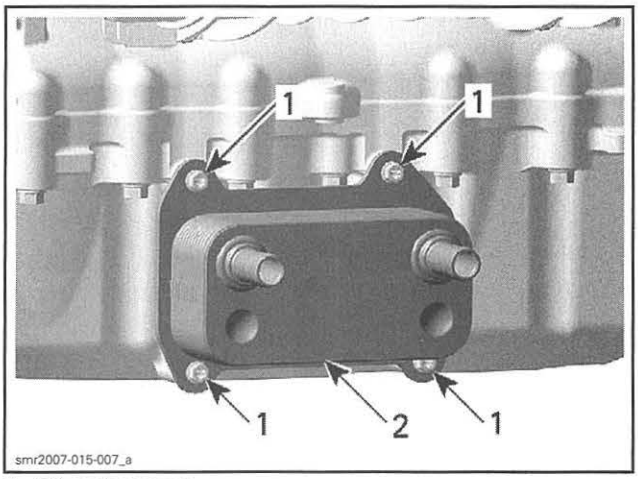

1. *Oil cooler crews*
2. *Oil cooler*

Remove oil cooler from engine. Ensure not to lose O-rings located between oil cooler and engine.

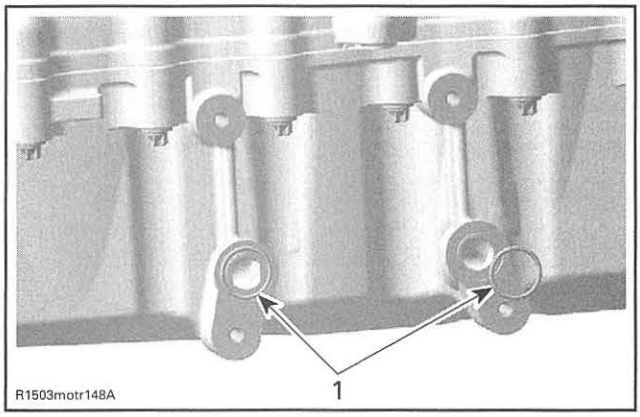

1. *O-rings*

Oil Cooler Inspection

If O-rings are brittle, cracked or hard, replace them.

Clean both contact surfaces of oil cooler.

Check and clean the oil inlet and outlet area for dirt and other contaminations.

Oil Cooler Installation

For installation, reverse the removal procedure. Pay attention to the following details.

Apply engine oil on O-rings.

Apply LOCTITE 243 (BLUE) (P/N 293 800 060) on threads of oil cooler screws.

Tighten oil cooler screws to specification.

TIGHTENING TORQUE	
Oil cooler screws	9 N•m (80 lbf•**in**)

COOLING SYSTEM

SERVICE TOOLS

Description	Part Number	Page
OETIKER PLIERS	295 000 070	144
TEST CAP	529 035 991	143
VACUUM/PRESSURE PUMP	529 021 800	143

SERVICE PRODUCTS

Description	Part Number	Page
BRP PREMIXED COOLANT	219 700 362	141
LOCTITE 243 (BLUE)	293 800 060	147
LOCTITE 567 (PIPE SEALANT)	293 800 013	142

COOLING SYSTEM (CLOSED LOOP)

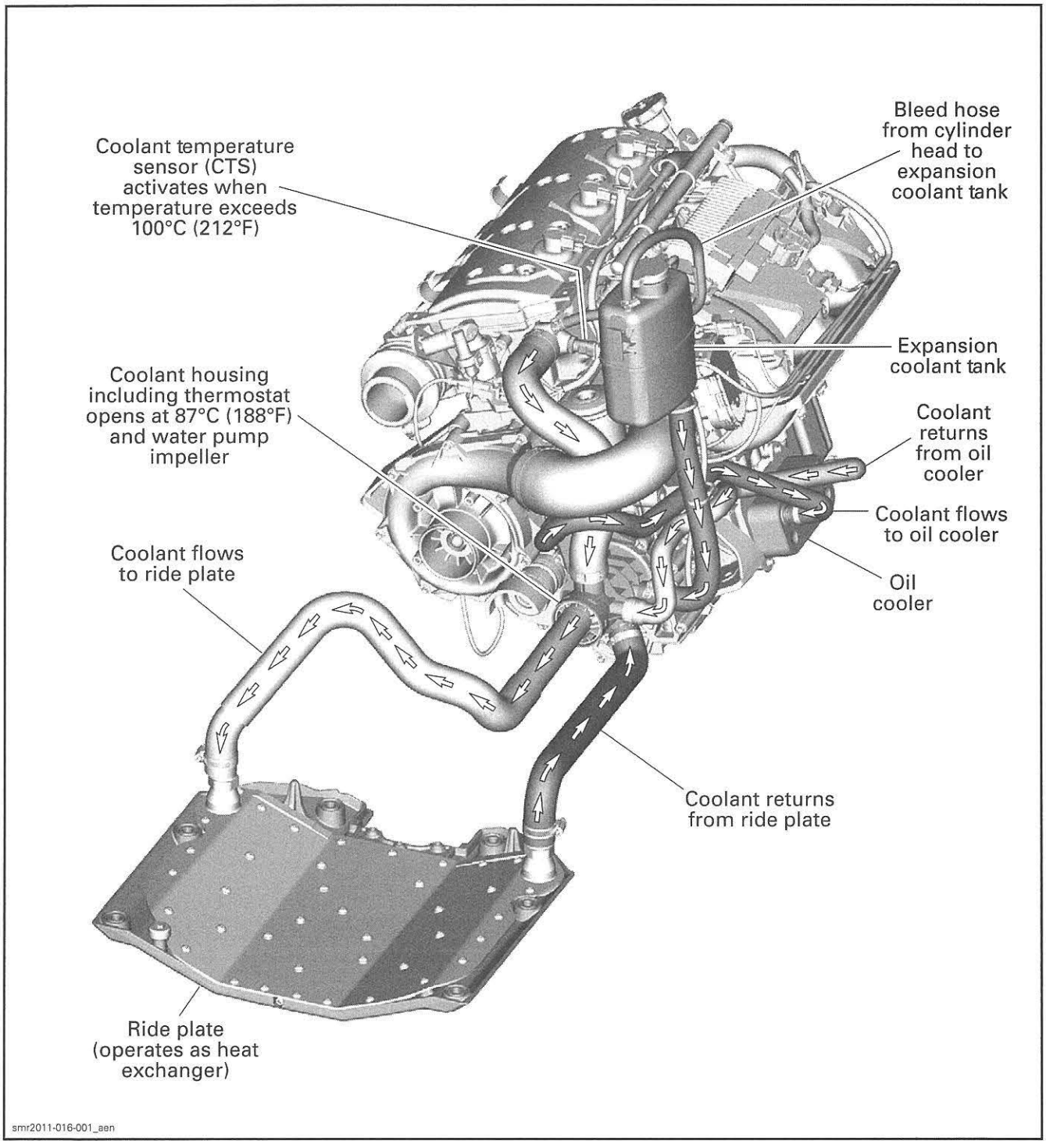

COOLING SYSTEM COMPONENTS

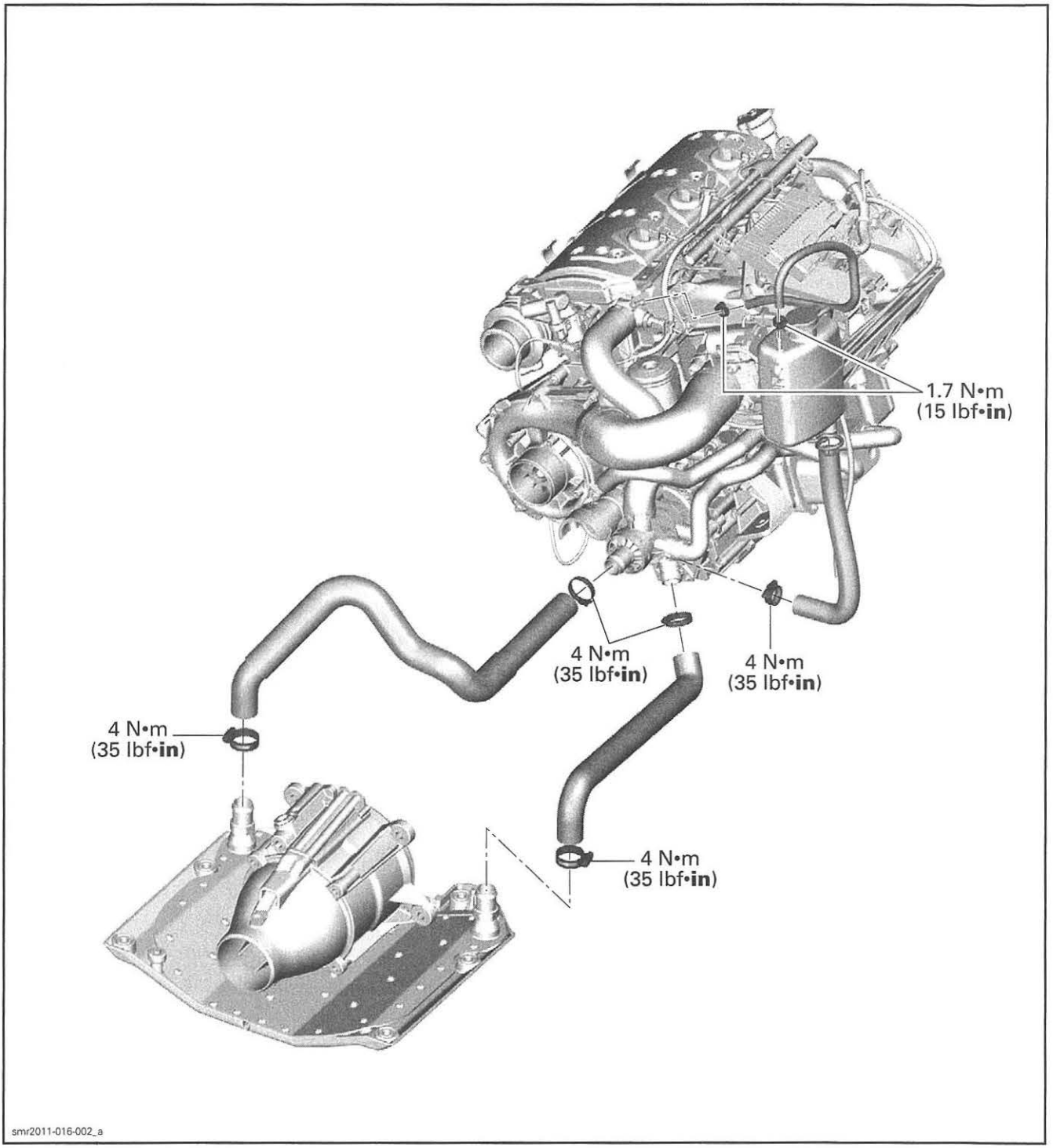

COOLING SYSTEM COMPONENTS (ENGINE)

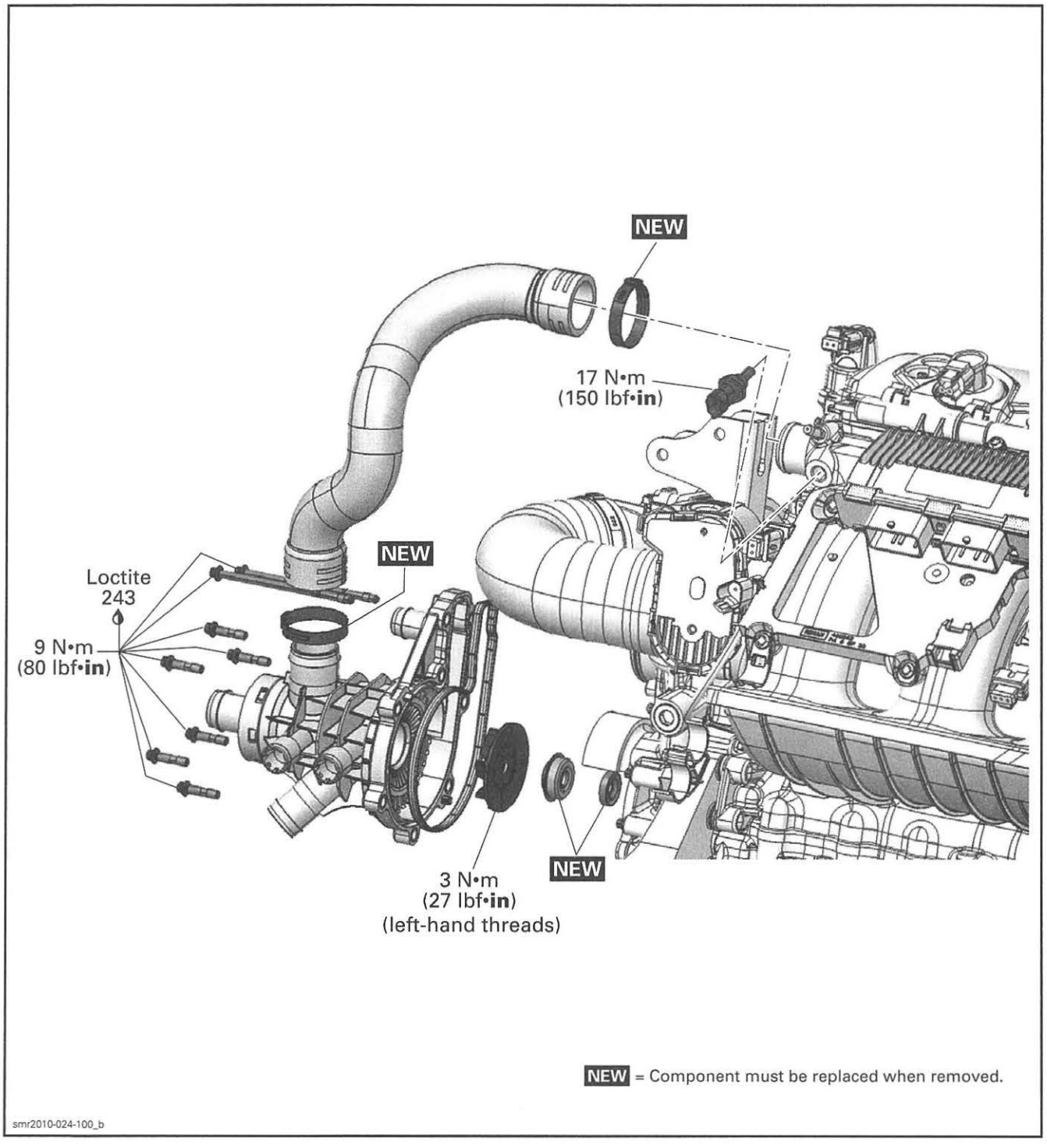

GENERAL

SYSTEM DESCRIPTION

A closed loop cooling system is utilized on the 1503 4-TEC engines, which offers an efficient engine cooling while keeping dirt and salt water out of the cooling system. This system keeps the temperature constant and prevents internal engine corrosion.

A separate coolant tank ensures that enough engine coolant is in the circuit during any operating condition.

The coolant flow comes from the water pump impeller into the cylinder block. It goes around the cylinders and straight up to the cylinder head. A smaller quantity of engine coolant enters the cylinder block on the exhaust side for a better cooling. In the cylinder head the water channels flow around the exhaust and then the intake valves and leave the engine through a large hose. From there the coolant goes back to the water pump housing and depending on the engine temperature, it flows through the thermostat directly back to the water pump impeller, or it takes its way through the heat exchanger.

Engine coolant is also directed towards the oil cooler (coolant type).

Coolant temperature sensor and bleed hose nipple are located on the cylinder head.

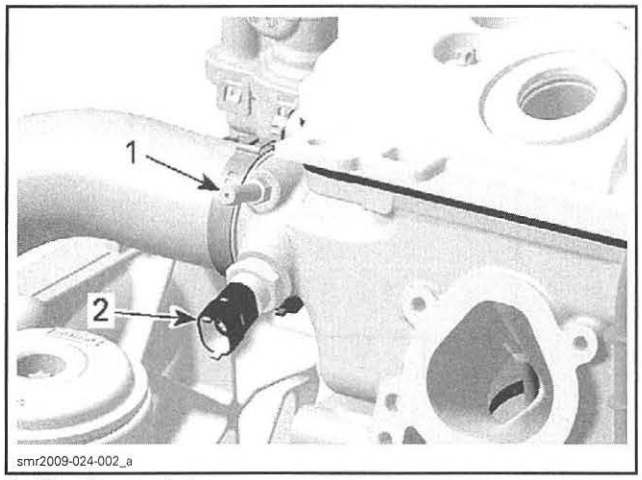

1. Bleed hose nipple
2. Coolant temperature sensor (CTS)

NOTICE Never modify cooling system arrangement, otherwise serious engine damage could occur.

Technical Specifications

TYPE	Closed loop cooling system.
COOLANT FLOW	Flow from water pump.
TEMPERATURE CONTROL	Thermostat.
SYSTEM BLEEDING	Self-bleed type through coolant tank (hose at uppermost point of circuit).
MONITORING BEEPER	Turns on at 110°C (230°F).

MAINTENANCE

ENGINE COOLANT

⚠ WARNING

To avoid potential burns, do not remove the coolant tank cap or loosen the ride plate drain plug if the engine is hot.

Recommended Coolant

Use BRP PREMIXED COOLANT (P/N 219 700 362) or a blend of 50% antifreeze with 50% distilled water.

NOTE: Using a blend of 40% antifreeze with 60% distilled water will improve the cooling efficiency when watercraft is used in particularly hot weather and/or hot water condition.

NOTICE **A blend of 40% antifreeze with 60% distilled water will improve the cooling efficiency. Using water tap instead of distilled water, would contribute to make deposits in cooling system and to reduce antifreeze efficiency. This could lead to engine overheating.**

To prevent antifreeze deterioration, always use the same brand. Never mix different brands unless cooling system is completely flushed and refilled.

NOTICE **To prevent rust formation or freezing condition in cold areas, always replenish the system with 50% antifreeze and 50% distilled water. Pure antifreeze will freeze at a higher temperature than the optimal water/antifreeze mix. Always use ethylene glycol antifreeze containing corrosion inhibitors specifically recommended for aluminum engines.**

Draining the System

⚠ WARNING

Never drain or refill cooling system when engine is hot.

Open or remove seat.

On **models with suspension**, remove the rear ventilation box.

Install a drain pan underneath the ride plate.

Unscrew the drain plug on ride plate.

NOTE: Raising the front of the watercraft will contribute to drain the cooling system.

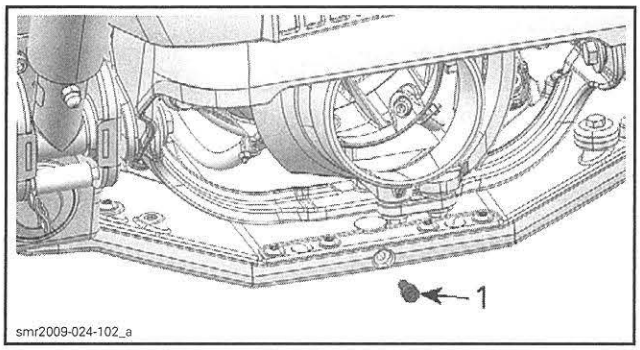

1. Cooling drain plug

Remove the coolant tank cap.

Dispose coolant as per local regulations.

Do not reinstall drain plug at this time.

Cleaning the System

NOTICE **Cleaning the cooling system as per the following procedure is required when engine overheats (assuming everything else is operating normally) or each time coolant is replaced.**

Drain the cooling system.

Add a cleaning product such as the Zerex® Super Cleaner by Valvoline (or an equivalent) in coolant tank then fill cooling system with demineralized water.

Reinstall cap on coolant tank.

Install watercraft in a test basin or ride on a water plane. Start engine and run for approximately 15 minutes.

IMPORTANT: Ensure thermostat opens so that the cleaning product flows in ride plate properly.

Stop engine and let the cleaning product work for 12 to 16 hours.

Thereafter, engine can be run one last time to soak off deposits.

Drain and thoroughly rinse the cooling system with clean fresh water.

Refill cooling system as described below.

Refilling the System

Watercraft should be level, engine cold and drain plug removed for refilling.

Place a container under drain plug to collect antifreeze.

Apply LOCTITE 567 (PIPE SEALANT) (P/N 293 800 013) on drain plug threads.

Ask someone to pour recommended antifreeze in coolant tank.

When antifreeze flows out from the ride plate drain hole, reinstall drain plug. Torque drain plug to specification.

TIGHTENING TORQUE	
Drain plug	8.5 N•m (75 lbf•**in**)

Continue to pour and fill coolant tank between marks.

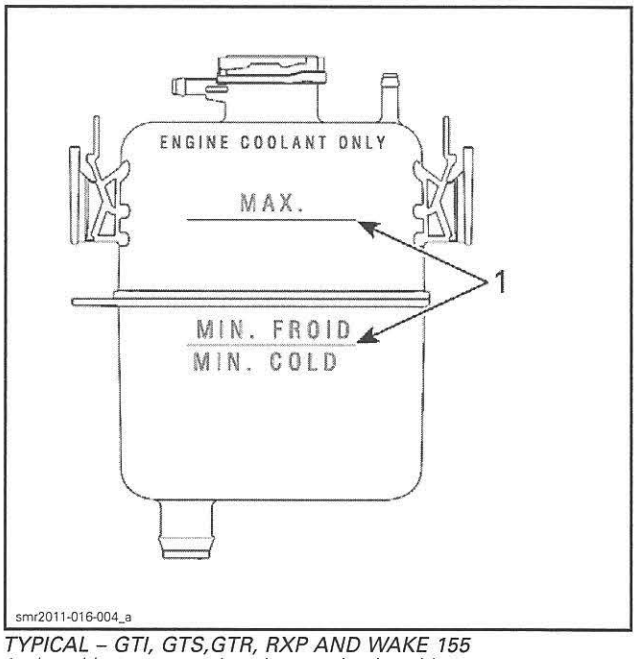

TYPICAL – GTI, GTS,GTR, RXP AND WAKE 155
1. Level between marks when engine is cold

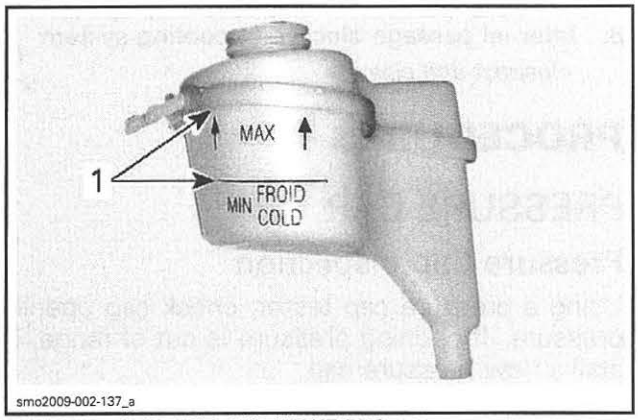

TYPICAL – GTX, RXT AND WAKE PRO 215
1. Level between marks when engine is cold

Do not install pressure cap at this time.

Link a garden hose to the hose adapter at the back of the watercraft. Refer to *EXHAUST SYSTEM FLUSHING* in the *EXHAUST SYSTEM* subsection.

NOTICE **Never run engine without supplying water to the exhaust system.**

Start engine and let run for a maximum of 2 minutes. Stop engine and wait 15 minutes to cool down. Refill tank as necessary.

NOTICE **Never run engine longer than 2 minutes. Drive line seal has no cooling when watercraft is out of water.**

NOTE: Properly cool exhaust system by installing a garden hose. Refer to *EXHAUST SYSTEM* subsection.

Repeat this run-stop cycle 2-3 times until thermostat opens and stop engine.

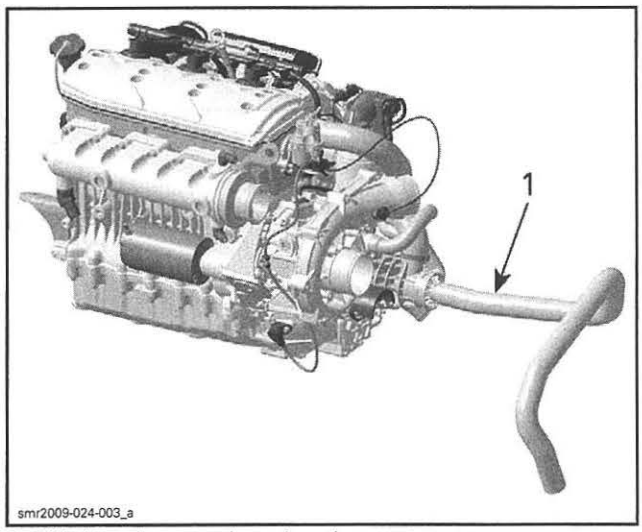

1. This hose becomes hot when thermostat opens

Last, refill coolant tank and install pressure cap.

When engine has completely cooled down, recheck coolant level coolant tank and top up if necessary.

INSPECTION

COOLING SYSTEM LEAK TEST

⚠ WARNING

To avoid potential burns, do not remove the coolant tank cap or loosen the ride plate drain plug if the engine is hot.

Open or remove seat.

On **models with suspension**, remove the deck extension. Refer to *BODY* subsection.

Install the TEST CAP (P/N 529 035 991) on the coolant tank.



NOTE: It is not necessary to install a hose pincher on overflow hose.

Connect the VACUUM/PRESSURE PUMP (P/N 529 021 800) to test cap and pressurize system through coolant tank to 90 kPa (13 PSI).

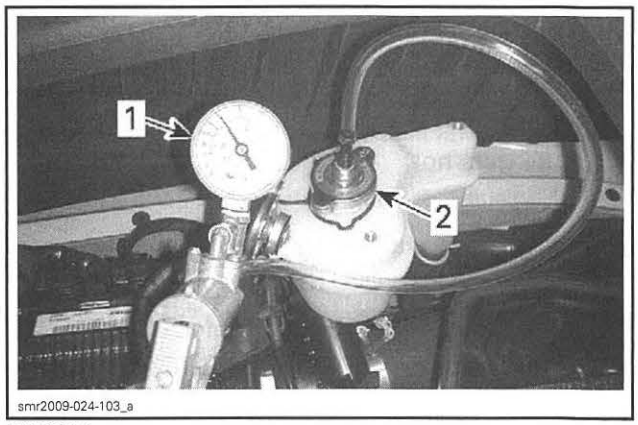

TYPICAL
1. Vacuum/pressure pump
2. Test cap

Check all hoses, ride plate, engine and oil cooler for coolant leaks. Spray a soap and water solution and look for air bubbles.

Check the leak indicator hole if there is oil or coolant. If so, replace appropriate water pump shaft seal.

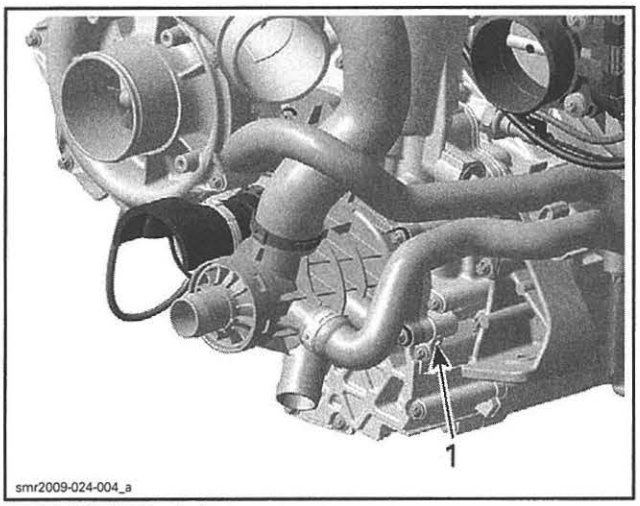

1. Leak indicator hole

TROUBLESHOOTING

The following is provided to help in diagnosing the probable source of troubles. It is a guideline and it should not be assumed to list all possible problems.

Always check for fault codes. If a fault code is detected, service the fault code first. Refer to *DIAGNOSTIC AND FAULT CODES* subsection.

ENGINE OVERHEATING

1. **Low coolant level.**
   - *Refill and check for leaks (coolant leaking out of engine leak indicator hole, hoses or clamps missing/defective, cylinder head gaskets leaks, ride plate leaking, etc.). Repair or replace.*
2. **Air in cooling system**
   - *Refill and bleed cooling system.*
3. **Thermostat defective (does not open when engine gets hot)**
   - *Replace thermostat housing.*
4. **Water pump failure**
   - *Inspect and replace defective components.*
5. **Water temperature sensor defective**
   - *Check or replace. Refer to ELECTRONIC FUEL INJECTION (EFI).*
6. **Ride plate or hoses damaged**
   - *Check or replace damaged components.*
7. **Exhaust system clogged**
   - *Flush exhaust system.*
8. **Internal passage blocked in cooling system**
   - *Inspect and clean.*

PROCEDURES

PRESSURE CAP

Pressure Cap Inspection

Using a pressure cap tester, check cap opening pressure. If opening pressure is out of range, install a new pressure cap.

CAP OPENING PRESSURE	
Opening range	90 kPa ± 10 kPa (13 PSI ± 1.5 PSI)

CLAMPS

Clamp Replacement

To cut or secure Oetiker clamps of cooling system hoses, use the OETIKER PLIERS (P/N 295 000 070).

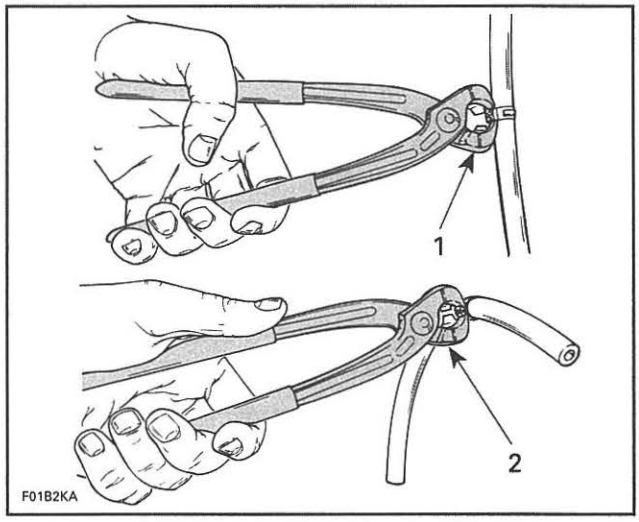

1. Cutting clamp
2. Securing clamp

NOTE: Always check general condition of hoses and clamp tightness.

WATER PUMP HOUSING

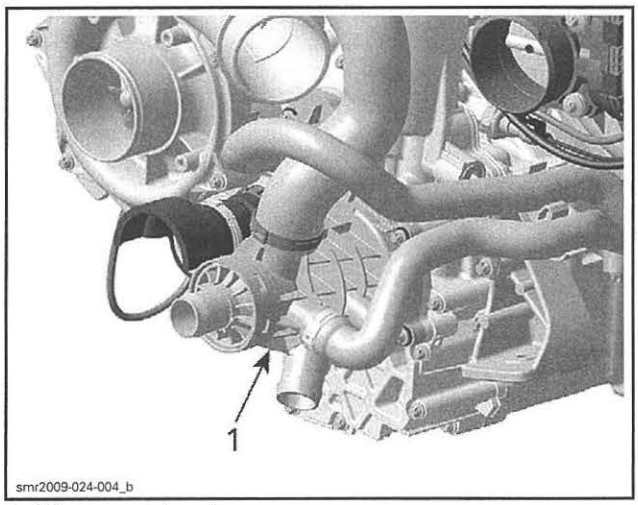

1. Water pump housing

Water Pump Housing Access

Models Without Suspension

1. Remove seat.
2. Remove the rear handle, **RXP-X models**.
3. Detach the air intake hose from the throttle body, **GTR and RXP-X models**.

Models with Suspension

1. Remove moving deck and deck extension. Refer to *BODY* subsection.
2. Remove the air intake silencer. Refer to *AIR INTAKE SYSTEM (MODELS WITH SUSPENSION)* subsection:
3. Detach the air intake hose from the throttle body.

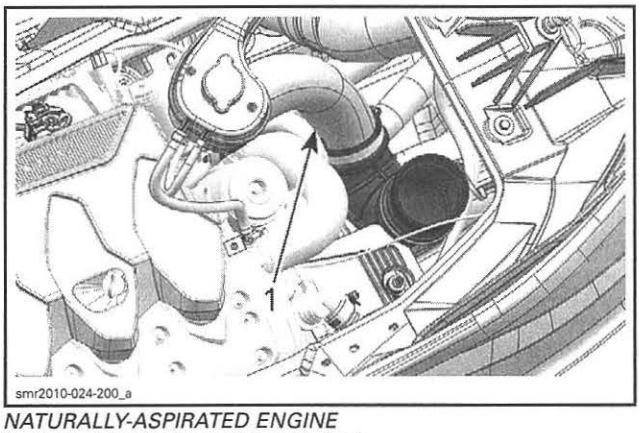

NATURALLY-ASPIRATED ENGINE
1. Detach intake hose at throttle body

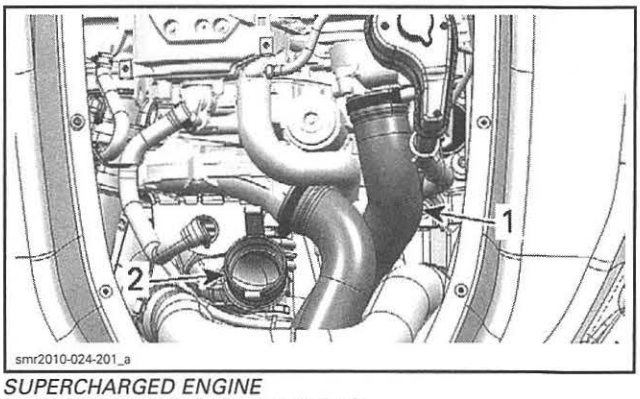

SUPERCHARGED ENGINE
1. Detach intake hose at throttle body
2. Supercharger hose

All Models

1. On **supercharged engines**, remove also the hose from the supercharger.
2. Drain cooling system and engine oil.
3. Disconnect the coolant tank hose from water pump housing and move coolant tank aside to make room.
4. Disconnect exhaust hose from the resonator. Place hose over muffler.

Water Pump Housing Removal

Disconnect ride plate hoses from water pump housing.

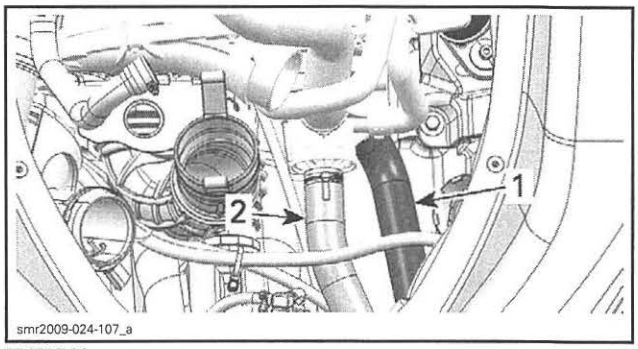

TYPICAL
1. Ride plate outlet hose
2. Ride plate inlet hose

Disconnect the cylinder head outlet hose and oil cooler hoses.

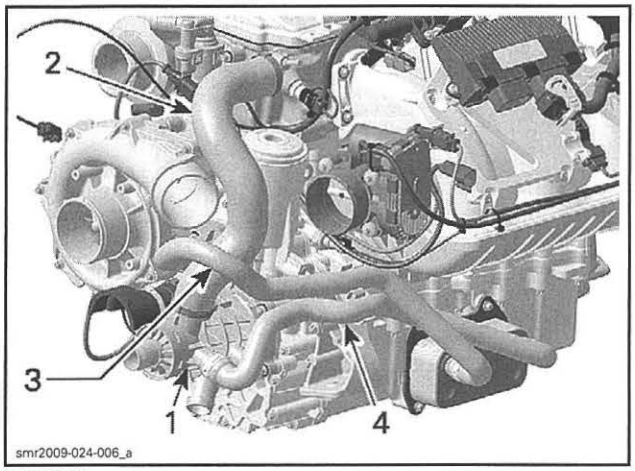

TYPICAL
1. *Water pump housing*
2. *Cylinder head hose*
3. *Oil cooler inlet hose*
4. *Oil cooler outlet hose*

Remove water pump housing screws.

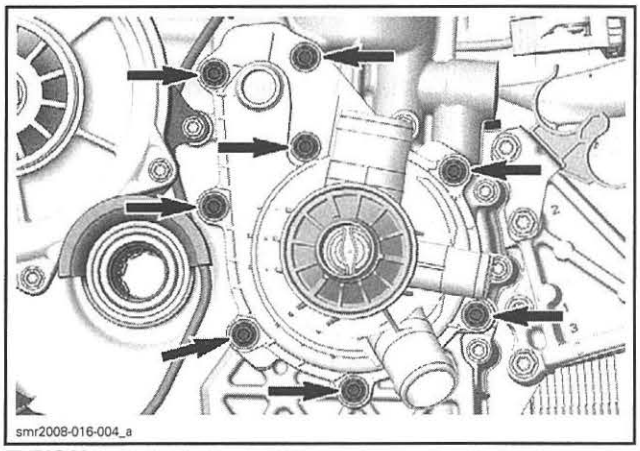

TYPICAL

Pull the water pump housing to remove it.

Water Pump Housing Inspection

Check if gasket is brittle, hard or damaged and replace as necessary.

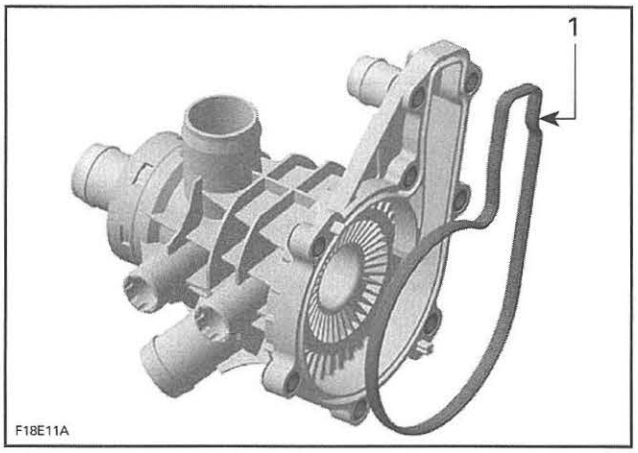

1. Water pump housing gasket

Check if thermostat is in good condition. Refer to *THERMOSTAT* in this subsection.

Water Pump Housing Leak Test

Plug the connections of the oil cooler return hose, coolant tank hose, ride plate return hose and cylinder head return hose with a rag.

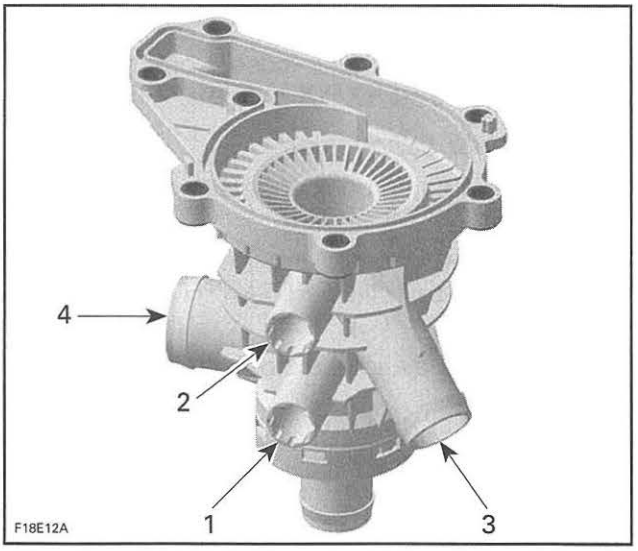

1. *Oil cooler return connection*
2. *Coolant tank hose connection*
3. *Ride plate return hose connection*
4. *Cylinder head return hose connection*

Fill the water pump housing with water.

If a bigger quantity of coolant leaks out at the ride plate outlet connection, replace the water pump housing.

If there is no leak, check the operation of the thermostat.

Water Pump Housing Installation

The installation is the opposite of the removal procedure. However, pay attention to the following.

Apply LOCTITE 243 (BLUE) (P/N 293 800 060) on threads of water pump housing screws.

Install screws as per the following illustration.

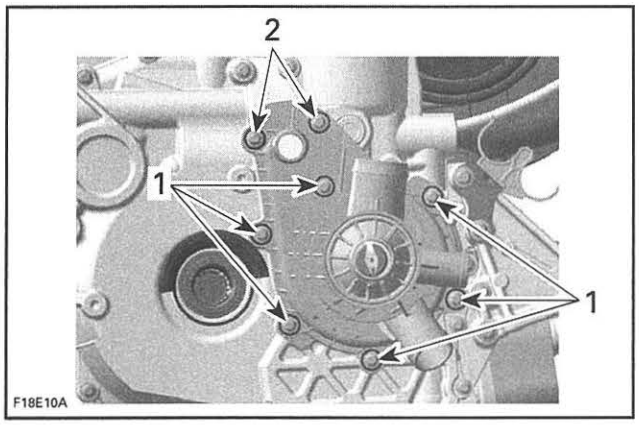

1. *Screws M6 x 25*
2. *Screws M6 x 105*

NOTICE To prevent leaking, take care that the gaskets are exactly in groove when you reinstall the water pump housing.

Tighten screws to specification using the following sequence.

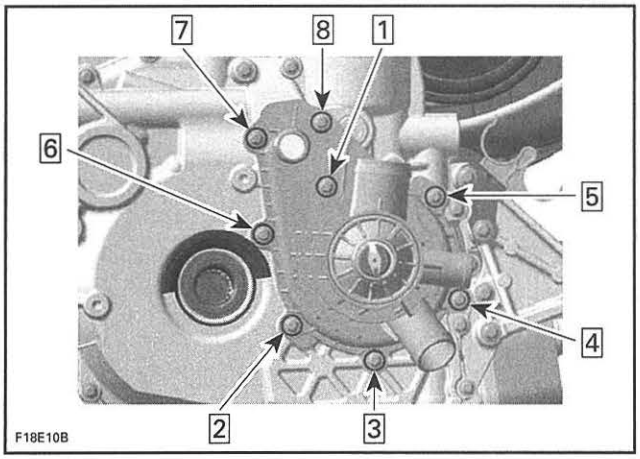

TIGHTENING TORQUE	
Water pump housing screws	9 N•m (80 lbf•**in**)

WATER PUMP IMPELLER

Water Pump Impeller Removal

Remove the *WATER PUMP HOUSING*, see procedure in this subsection.

Unscrew the impeller clockwise.

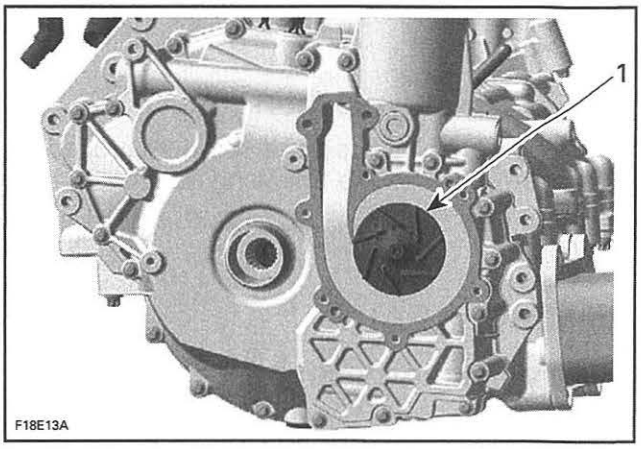

1. *Impeller*

NOTICE Coolant/oil pump shaft and impeller have left-hand threads. Remove by turning clockwise and install by turning counterclockwise.

Water Pump Impeller Inspection

Check impeller for cracks or other damage. Replace impeller if damaged.

Water Pump Impeller Installation

The installation is the opposite of the removal procedure. Pay attention to the following details.

NOTICE Be careful not to damage impeller wings during installation.

Torque impeller to specification.

TIGHTENING TORQUE	
Water pump impeller	3 N•m (27 lbf•**in**)

THERMOSTAT

The thermostat is a single action type.

Thermostat Removal

Remove the *WATER PUMP HOUSING*, see procedure in this subsection.

NOTE: The thermostat is located inside the water pump housing.

Thermostat Test

To check the operation of the thermostat, put it in water and heat water.

Look inside the cylinder head return hose connection to see the movement of the thermostat. Thermostat should open when water temperature reaches 87°C (189°F).

If there is no operation, replace the water pump housing.

Thermostat Installation

For installation, reverse the removal procedure, paying attention to the following details.

Refer to *WATER PUMP HOUSING* in this subsection.

ROTARY SEAL

Rotary Seal Inspection

Check leak indicator hole for oil or coolant leak.

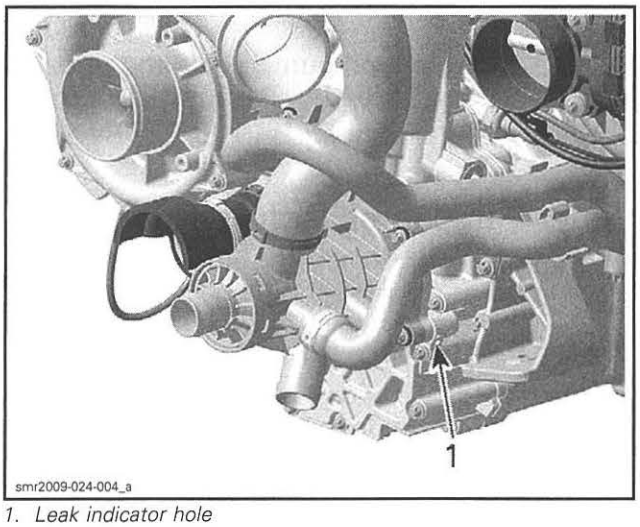

1. Leak indicator hole

Coolant leaking out of the hole indicates a defective rotary seal. Leaking oil indicates a faulty oil seal.

Rotary seal and oil seal must be replaced together.

Rotary Seal Replacement

Refer to *LUBRICATION SYSTEM* subsection.

CYLINDER HEAD

SERVICE TOOLS

Description	Part Number	Page
CAMSHAFT LOCKING TOOL	529 035 839	158
DRIVE SHAFT ADAPTER	529 035 985	151
ENGINE LEAK DOWN TEST KIT	529 035 661	152
VALVE GUIDE PUSHER (6 MM)	529 036 087	167
VALVE GUIDE REMOVER (6 MM)	529 036 086	167
VALVE SPRING COMPRESSOR CUP	529 036 073	162
VALVE SPRING COMPRESSOR	529 035 724	162

SERVICE TOOLS – OTHER SUPPLIER

Description	Part Number	Page
SNAP-ON VALVE STEM SEAL PLIERS	YA8230	163

SERVICE PRODUCTS

Description	Part Number	Page
ISOFLEX GREASE TOPAS NB 52	293 550 021	159
LOCTITE 243 (BLUE)	293 800 060	158, 161
MOLYKOTE G-N	420 297 433	167

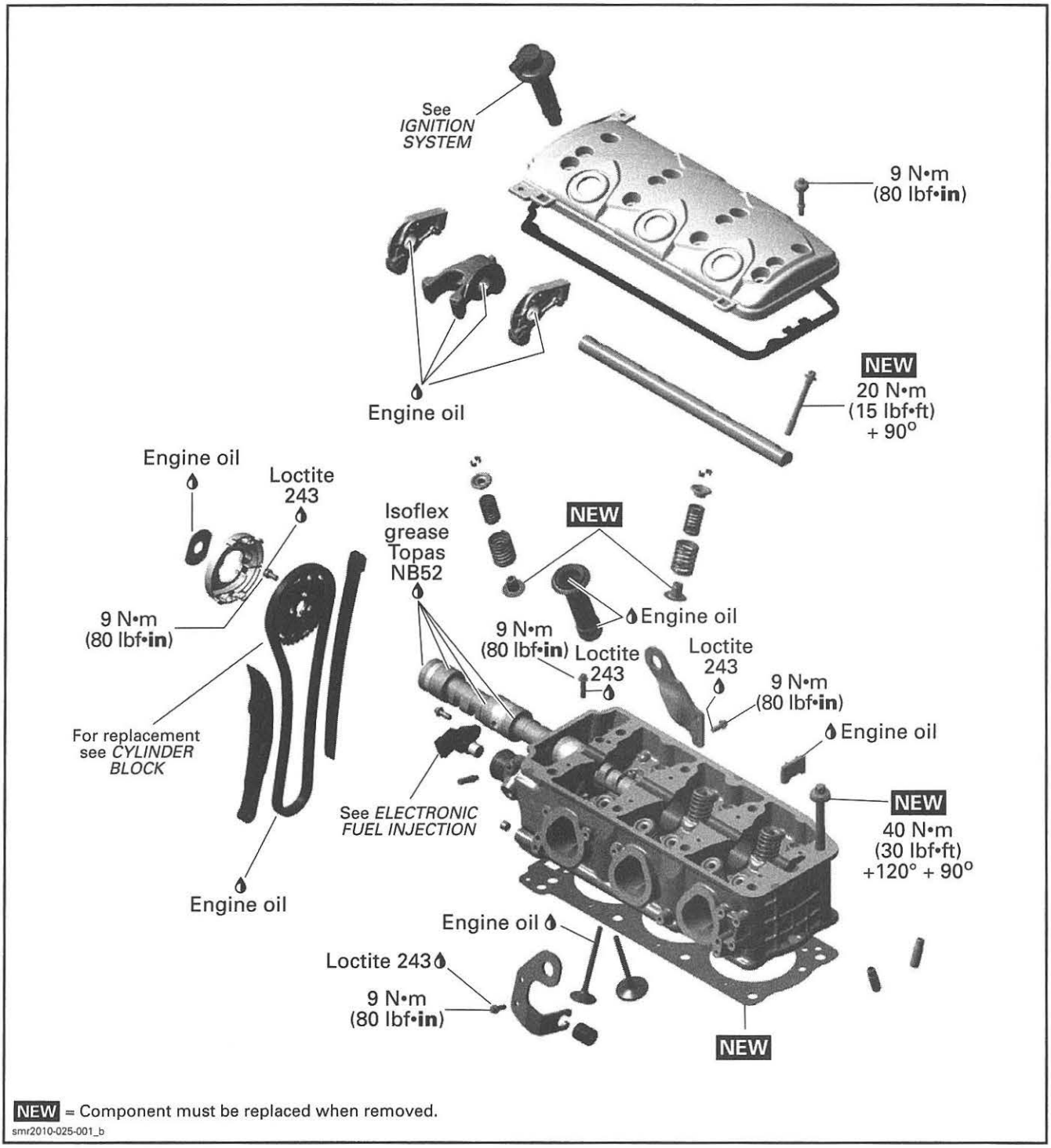

NEW = Component must be replaced when removed.

smr2010-025-001_b

GENERAL

NOTE: When diagnosing an engine problem, always perform an engine leak test. This will help pin-point a problem. Refer to *ENGINE LEAK TEST* in this subsection for procedures.

When disassembling parts that are duplicated in the engine, (e.g.: valves, bushings), it is strongly recommended to note their position and to keep them as a "group". If you find a defective component, it will be much easier to find the cause of the failure. Since parts were break-in together during the engine operation, they will keep their matched fit when parts are reassemble together within their "group".

INSPECTION

ENGINE LEAK TEST

The procedure has to be done when engine operating temperature of approximately 70°C (158°F) is reached.

⚠ WARNING

Be careful to burns when working on a hot engine.

Preparation

1. Remove any required parts to give access to engine.
2. Remove the tether cord.
3. Remove jet pump (refer to *JET PUMP* subsection).
4. Remove coolant pressure cap.

⚠ WARNING

To avoid potential burns, only remove the coolant pressure cap by wearing the appropriate safety equipment.

5. Remove oil dipstick.

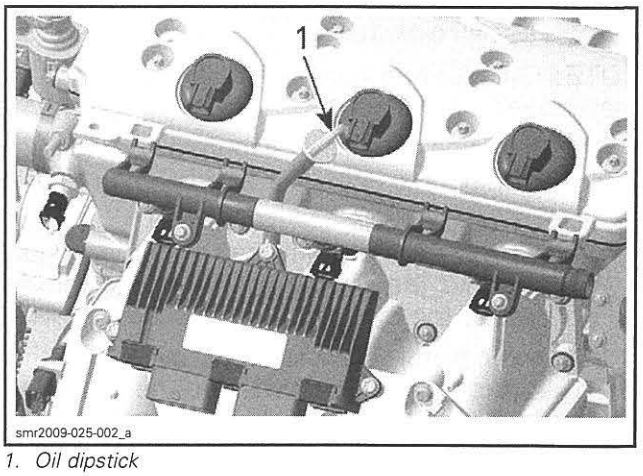

1. Oil dipstick

6. Unplug and remove ignition coils.
7. Remove spark plugs.

NOTE: Ignition coil may be used as an extractor.

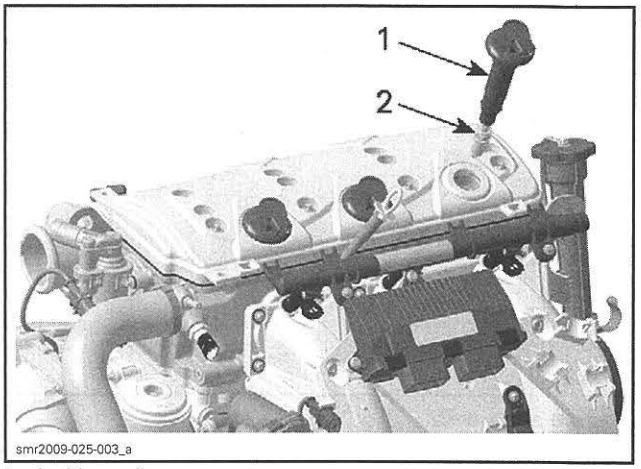

1. Ignition coil
2. Spark plug

8. Remove *CYLINDER HEAD COVER*, see procedure in this subsection.
9. Install the drive shaft adapter and an appropriate wrench lever on drive shaft end.

REQUIRED TOOL	
DRIVE SHAFT ADAPTER (P/N 529 035 985)	

Leak Test Procedure

NOTE: Cylinder numbers are molded on cylinder head cover.

1. Rotate engine crankshaft counterclockwise until the cylinder 1 is at Top Dead Center (TDC) compression stroke.
   1.1 As the engine crankshaft is turned over, observe the movement of intake rocker arm of the cylinder to be checked.
   1.2 After piston completes its cycle and the intake valve closes, observe the piston.
   1.3 When it reaches its uppermost position **this is TDC compression stroke.**

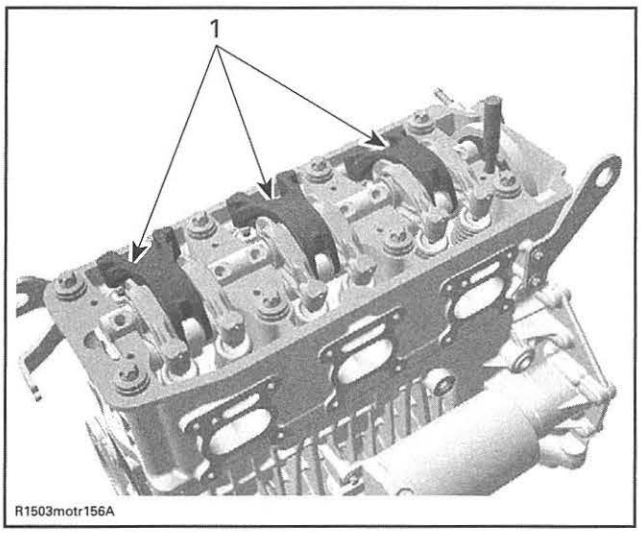

1. Intake rocker arms

2. Secure the wrench lever, at the end of the drive shaft, against hull to prevent further crankshaft rotation.
3. Install the leak down test tool.

REQUIRED TOOL	
ENGINE LEAK DOWN TEST KIT (P/N 529 035 661)	

   3.1 Install the appropriate gauge adapter into spark plug hole.
   3.2 Connect the leak down tester gauge to the gauge adapter.
   3.3 Connect to an adequate pressurized air supply.
   3.4 Set needle of measuring gauge to zero (0).

NOTE: Each tester will have specific instruction on the gauge operation and required pressure. Refer to manufacturer's instructions.

4. Supply combustion chamber with air.

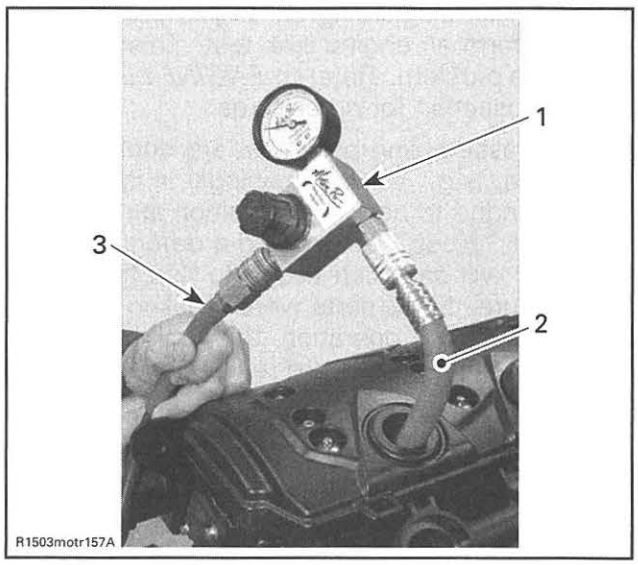

TYPICAL
1. Leak down tester gauge
2. Gauge adapter
3. Air supply hose

5. Note the amount of leaking or percentage (depending on tester).

LEAKAGE PERCENTAGE	ENGINE CONDITION
Up to 15%	Excellent condition
16% to 25%	Good condition
26% to 40%	Fair condition; engine will run and performance might be down in some cases
41% and higher	Poor condition, diagnose and repair engine

6. Proceed the same way with remaining cylinders.

Diagnostic

Pressurize area to be tested, spray soap/water solution at the indicated location and look and/or listen for air bubbles.

OBSERVATION	CAUSE
Air escaping on intake port	Leaking intake valve(s)
Air escaping on exhaust port	Leaking exhaust valve(s)
Air escaping into crankcase	Excessively worn and/or broken piston rings
Air bubbles out of coolant tank	Leaking cylinder head gasket

OBSERVATION	CAUSE
Air/water escaping from cylinder-block/head	Damaged gasket and/or loosened screws
Coolant escaping from water pump housing	Damaged gasket and/or loosened screws (refer to *COOLING SYSTEM*)
Coolant escaping from leak indicator hole	Damaged rotary seal on water pump shaft (refer to *COOLING SYSTEM*)
Oily contamination on leak indicator hole	Damaged oil seal on water pump shaft

Reassembly

For reassembly, reverse the preparation procedure. Use torque values and service products from the exploded views (refer to proper *ENGINE* subsections).

Properly install ignition coils. Refer to *IGNITION SYSTEM* subsection.

TROUBLESHOOTING

The following is provided to help in diagnosing the probable source of problems. It is a guideline and it should not be assumed to list all possible problems.

Always check for fault codes. If a fault code is detected, service the fault code first. Refer to *DIAGNOSTIC AND FAULT CODES* section.

UNUSUAL ENGINE NOISE OR VIBRATIONS

1. **Incorrect camshaft timing adjustment**
   - *Replace damaged components and readjust camshaft timing.*
2. **Camshaft timing gear screws got loose**
   - *Retighten screws with the recommended torque.*
3. **Rocker arm(s) hydraulic element is broken or worn out (improper valve adjustment).**
   - *Replace faulty rocker arm(s).*
4. **Rocker arm screw not properly tightened**
   - *Retighten screws with recommended torquing procedure.*
5. **Faulty chain tensioner**
   - *Replace chain tensioner.*
6. **Chain guide is worn out**
   - *Replace chain guide.*
7. **Stretched timing chain or worn out sprocket**
   - *Replace timing chain and sprocket.*
8. **Camshaft is worn out**
   - *Check if camshaft radial clearance is out of specification.*

OIL LEAKAGE FROM CYLINDER HEAD

1. **Cylinder head cover gasket is leaking**
   - *Replace cylinder head cover gasket and retighten screws with recommended torque.*
   - *Check cylinder head cover for cracks or other damage. Replace if necessary.*
2. **Cylinder head cover screws are leaking**
   - *Replace cylinder head cover screws.*
3. **Spark plug tube gasket is leaking**
   - *Remove cylinder head cover and replace spark plug tube gasket.*
   - *Clean spark plug area from oil spillage.*
4. **Blow by valve is leaking**
   - *Replace blow by valve O-ring.*
5. **Camshaft sensor O-ring is leaking**
   - *Replace camshaft sensor O-ring.*
6. **Cylinder head gasket is leaking**
   - *Remove cylinder head and check for damage.*
   - *Replace cylinder head gasket and retighten screws with recommended torquing procedure.*

ENGINE LACKS ACCELERATION OR POWER

1. **Incorrect camshaft timing adjustment**
   - *Replace damaged components and readjust camshaft timing.*
2. **Intake or exhaust valves are leaking**
   - *Perform ENGINE LEAK TEST.*
   - *Check if valve seats properly in valve seat.*
   - *Repair or replace damaged components.*
3. **Broken valve spring(s)**
   - *Replace defective parts.*
4. **Broken rocker arm(s)**
   - *Replace defective parts.*

PROCEDURES

CYLINDER HEAD COVER

Cylinder Head Cover Access

Open or remove seat.

On **models with suspension**, remove the rear ventilation cover.

Cylinder Head Cover Removal

1. Unplug and remove ignition coils.

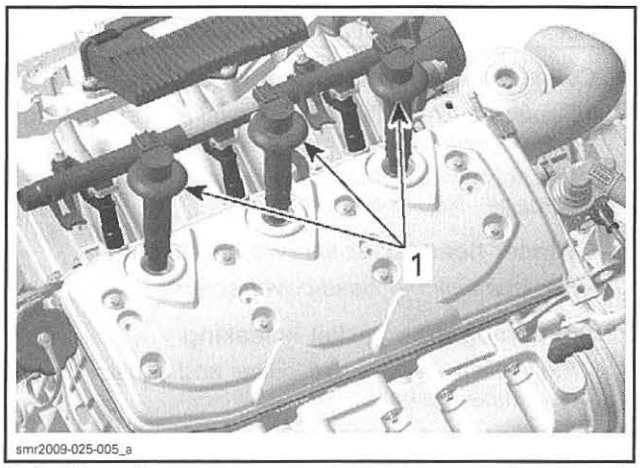

1. Ignition coils

2. Remove screws securing the cylinder head cover.

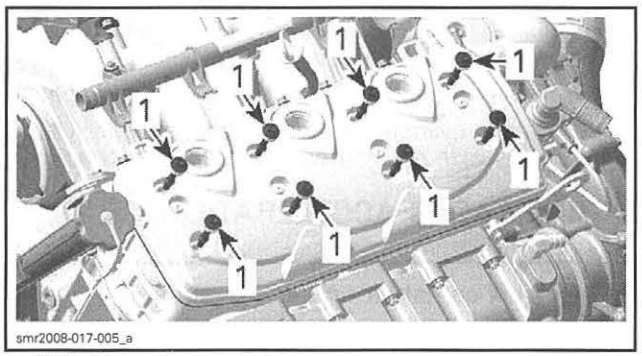

1. Cylinder head cover screws

3. Remove the cylinder head cover and its gasket.

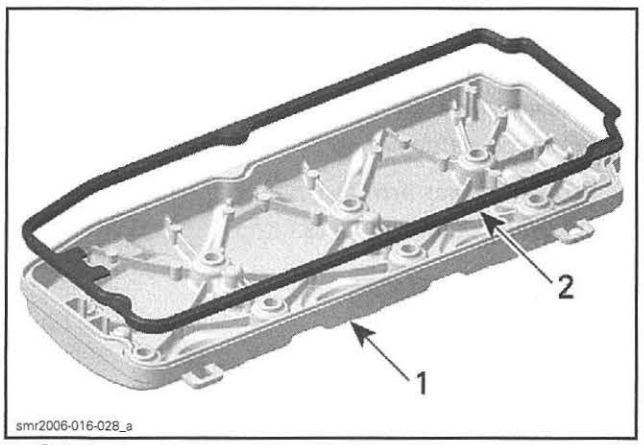

1. Cylinder head cover
2. Gasket

Cylinder Head Cover Inspection

Check if the gasket on the cylinder head cover and the rubber bushing on the cylinder head cover screws are brittle, cracked or hard. If so, replace the gasket or the cylinder head cover screw accordingly.

Cylinder Head Cover Installation

For installation, reverse the removal procedure. However, pay attention to the following.

Properly seat the gasket in the cover groove.

Install the cylinder head cover screws according to following sequence.

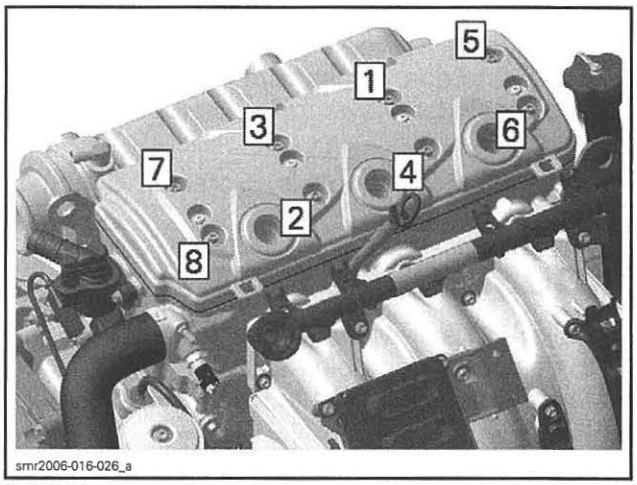

TYPICAL

TIGHTENING TORQUE	
Cylinder head cover screws	9 N•m (80 lbf•**in**)

Install all other removed parts. Refer to proper subsection for procedure.

SPARK PLUG TUBES

Spark Plug Tube Removal

Remove the *CYLINDER HEAD COVER*, see procedure in this subsection.

Pull spark plug tubes to remove them.

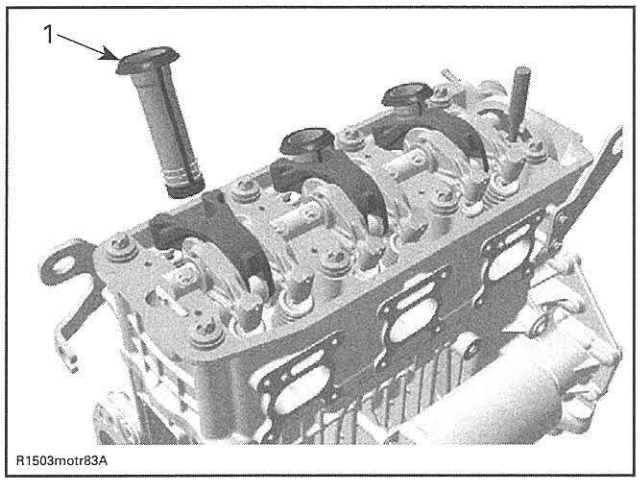

1. Spark plug tube

Spark Plug Tube Inspection

Check seals on spark plug tube. If seals are brittle, cracked or hard, replace spark plug tube.

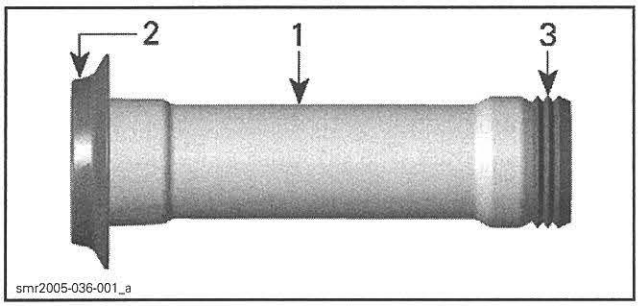

TYPICAL
1. Spark plug tube
2. Seal to the cylinder head cover
3. Seal to the cylinder head

Spark Plug Tube Installation

For installation, reverse the removal procedure. Pay attention to the following detail.

Apply engine oil on seals.

ROCKER ARMS

Rocker Arm Removal

1. Remove the *CYLINDER HEAD COVER*, see procedure in this subsection.
2. Remove spark plug tubes.
3. Remove and discard rocker arm shaft screws.

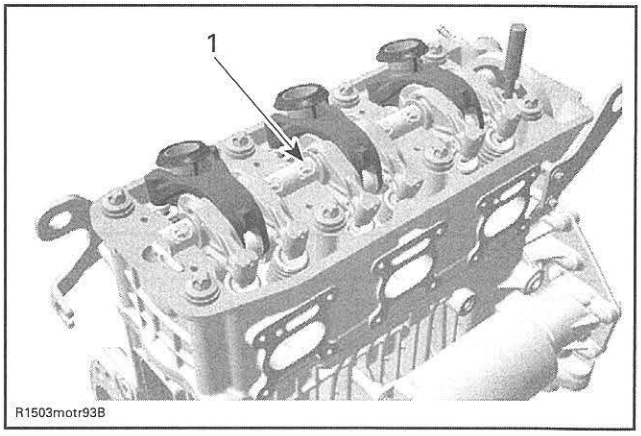

1. Rocker arm shaft screw

4. Remove rocker arm shaft with rocker arms.

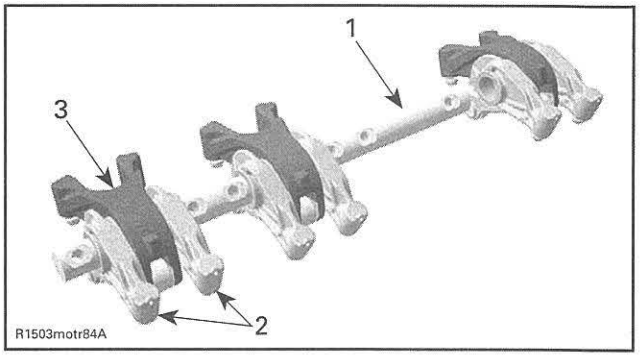

1. Rocker arm shaft
2. Rocker arms (exhaust side)
3. Rocker arm (intake side)

Rocker Arm Inspection

Inspect each rocker arm for cracks and scored friction surfaces. If so, replace rocker arm assembly.

Check the rocker arm rollers for free movement, wear and excessive radial play. Replace rocker arm assembly as necessary.

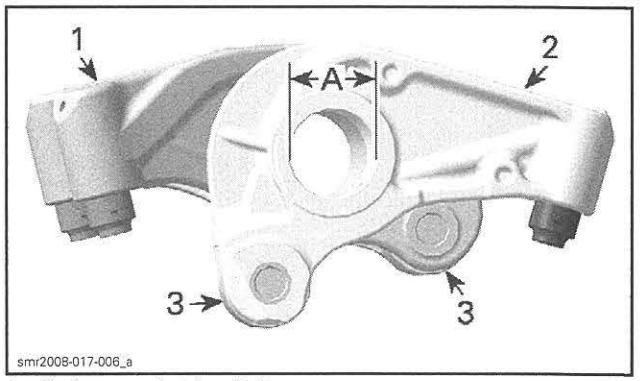

1. Rocker arm (intake side)
2. Rocker arm (exhaust side)
3. Rollers
A. Rocker arm inside diameter

Measure rocker arm inside diameter. If diameter is out of specification, change the rocker arm assembly.

ROCKER ARM INSIDE DIAMETER	
NEW	20.007 mm - 20.020 mm (.7877 in - .7882 in)
SERVICE LIMIT	20.050 mm (.7894 in)

Press the hydraulic lifter with your thumb. If the hydraulic lifter can be fully pressed in, replace rocker arm. Lifter must turn freely in rocker arm bore. Otherwise, replace.

Rocker Arm Shaft

Check for scored friction surfaces, if so, replace parts.

Measure rocker arm shaft diameter.

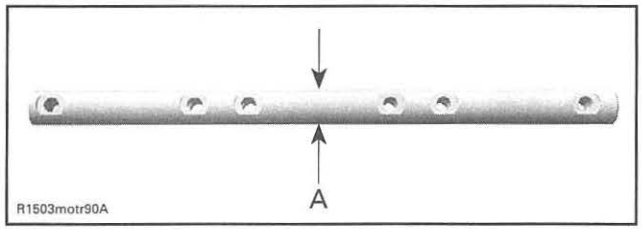

A. Measure rocker arm shaft diameter here

ROCKER ARM SHAFT DIAMETER	
NEW	19.980 mm - 19.993 mm (.7866 in - .7871 in)
SERVICE LIMIT	19.970 mm (.7862 in)

Any area worn excessively will require parts replacement.

Verify and clean oil orifices to ensure a good rocker arm shaft lubrication.

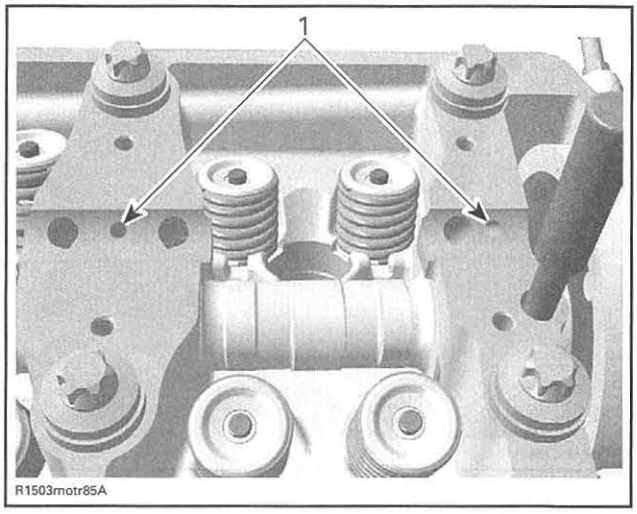

1. Oil orifices from the camshaft to the rocker arm shaft, then to the rocker arms and finally to the valve adjustment

Rocker Arm Installation

For installation, reverse the removal procedure. Pay attention to the following details.

NOTE: The rocker arm shaft can only be installed in one specific position. Therefore the camshaft has to be positioned with its locking pin when the piston of cylinder 3 is on ignition TDC.

1. Lock camshaft. Refer to *CAMSHAFT* in this subsection.
2. Make sure the position lines on oil separator cover are lined up as shown in the following illustration.

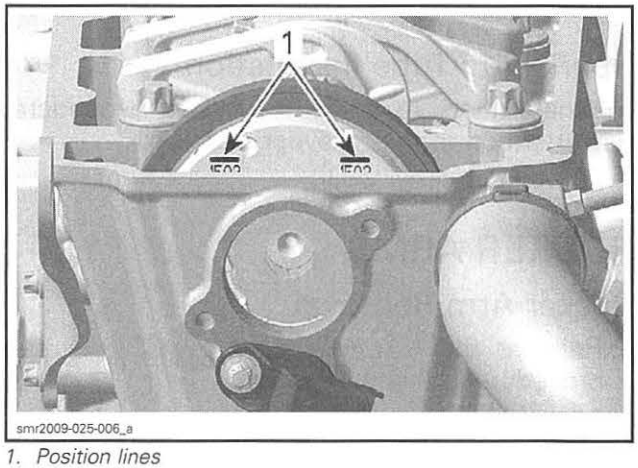

1. Position lines

3. Apply engine oil on rocker arm shaft.
4. Position the rocker arm shaft with the notches on top.

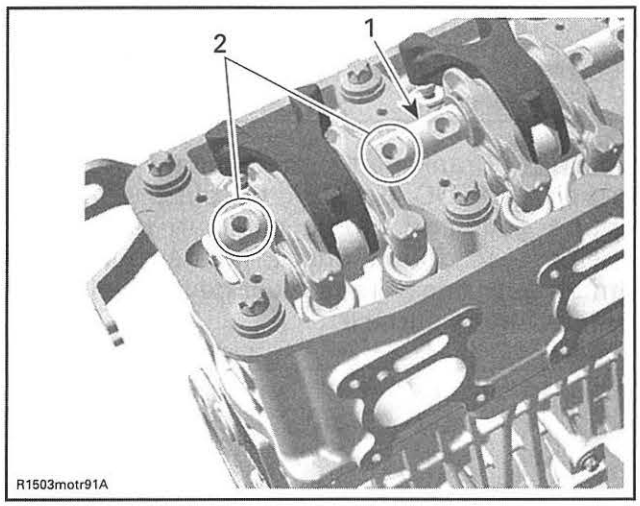

1. *Rocker arm shaft*
2. *Rocker arm shaft notches*

5. Install **NEW** rocker arm shaft screws.

NOTICE **This assembly uses stretch screws. As the screws have been stretched from the previous installation, it is very important to use new screws at assembly. Failure to replace screws and to strictly follow the torque procedure may cause screws to loosen and lead to engine damage.**

6. Torque screws according to following sequence.

NOTE: Always perform a step on **ALL** rocker arm shaft screws before going to the next step.

TIGHTENING TORQUE		
Rocker arm shaft screws	Step 1	10 N•m (89 lbf•**in**)
	Step 2	20 N•m (15 lbf•ft)
	Step 3	Apply an additional 90° rotation

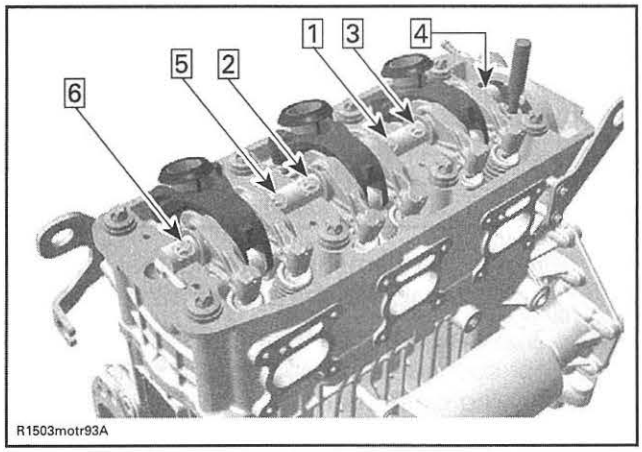

CAMSHAFT TIMING GEAR

NOTE: Although it is not necessary to position crankshaft to TDC for disassembly, it is a good practice to do it, as a troubleshooting step, to know before disassembly if valve timing was appropriate.

Camshaft Timing Gear Removal

Lock crankshaft, refer to *CYLINDER BLOCK* subsection.

Remove *CYLINDER HEAD COVER*, see procedure in this subsection.

Lock camshaft. Refer to *CAMSHAFT* in this subsection.

Remove the oil separator cover. Refer to *LUBRICATION SYSTEM* subsection.

Remove the chain tensioner. Refer to *CYLINDER BLOCK* subsection.

Remove the following parts:
- Chain guide
- Camshaft timing gear.

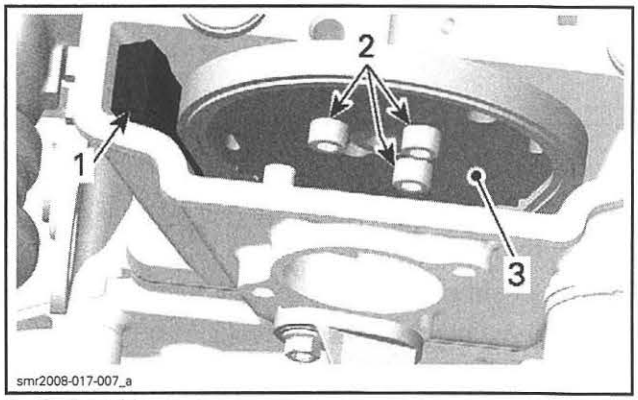

1. *Chain guide*
2. *Timing gear screws*
3. *Camshaft timing gear*

NOTE: Secure timing chain with a retaining wire.

Camshaft Timing Gear Inspection

Check camshaft timing gear for wear or deterioration.

If gear is worn or damaged, replace it as a set (camshaft timing gear and timing chain).

NOTE: For crankshaft timing gear replacement, refer to *CYLINDER BLOCK* subsection.

Camshaft Timing Gear Installation

For installation, reverse the removal procedure. Pay attention to the following details.

NOTICE **Improper camshaft timing will damage engine components. Make sure camshaft and crankshaft are still locked. If not, lock them before beginning this procedure.**

Install the camshaft timing gear with the writing visible, i.e. to be able to see the position lines when looking from outside of engine.

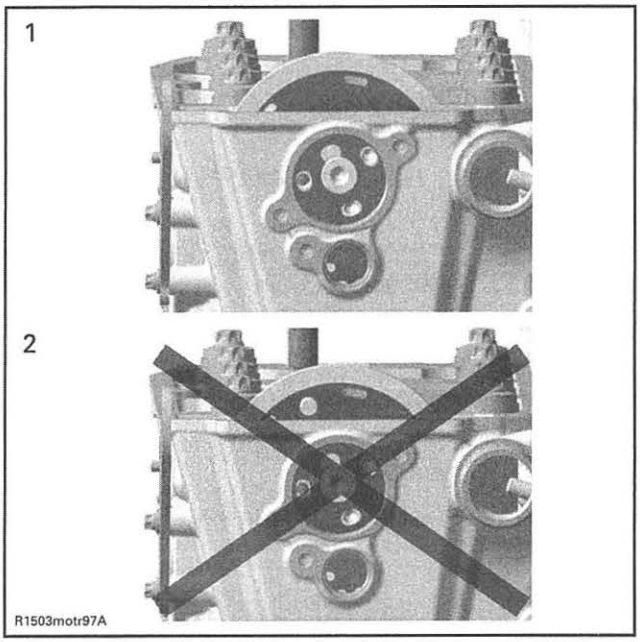

1. Good (with 1503 aligned)
2. Never

Install timing chain. Refer to *CYLINDER BLOCK* subsection.

Ensure chain guides are properly installed.

Loosely install gear chain screws.

Install chain tensioner.

NOTE: There can be 2 different positions to install the timing gear on the camshaft. Basically both positions are working well, since the camshaft and crankshaft are locked in their proper position. Due to some tolerances, there could be one position which fits better than the other one. To check this, perform the following test.

Check if timing gear screws are still loose. If screws are squeezed by the timing gear, remove the chain tensioner again and rotate timing gear by one tooth clockwise. Then install the chain tensioner again.

One at a time, remove timing gear screws and apply LOCTITE 243 (BLUE) (P/N 293 800 060) on threads.

Tighten timing gear screws to specification.

TIGHTENING TORQUE	
Camshaft timing gear screws	9 N•m (80 lbf•**in**)

NOTICE **Crankshaft and camshaft must be locked on TDC position to place camshaft timing gear and timing chain in the proper position. To double check, take a look at the timing gear lines. They must be parallel to the cylinder head surface.**

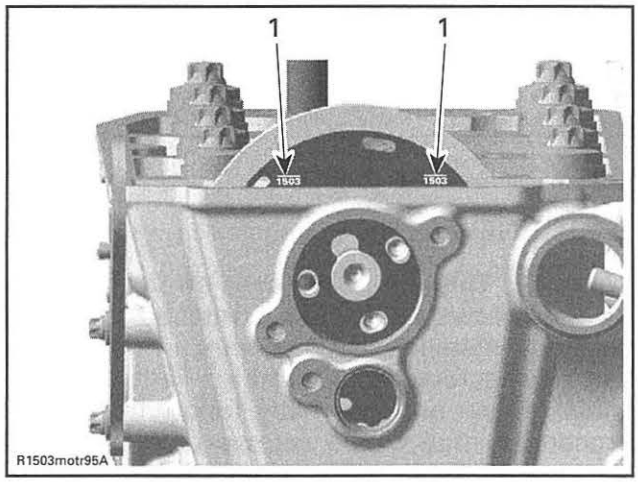

1. Position lines

NOTICE **Ensure to remove locking tools when finished.**

Install all other removed parts.

CAMSHAFT

Camshaft Locking Procedure

1. Remove *CYLINDER HEAD COVER*, see procedure in this subsection.
2. Lock crankshaft, refer to procedure in *CYLINDER BLOCK* subsection.
3. Lock camshaft.

REQUIRED TOOL	
CAMSHAFT LOCKING TOOL (P/N 529 035 839)	

3.1 Insert the camshaft locking tool into the hole behind the camshaft timing gear.

3.2 Make sure the position lines on oil separator cover are lined up as shown in the following illustration.

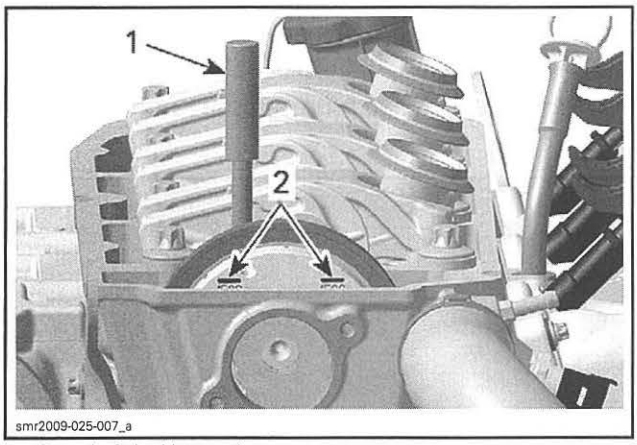

1. Camshaft locking tool
2. Position lines

Camshaft Removal

Remove the *CAMSHAFT TIMING GEAR*, see procedure in this subsection.

Remove the *ROCKER ARM*, see procedure in this subsection.

Remove the camshaft lock to remove the camshaft.

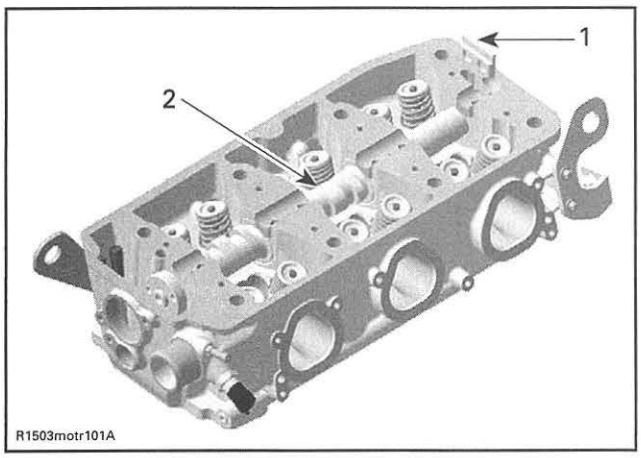

1. Camshaft lock
2. Camshaft

Camshaft Inspection

Check each lobe and bearing journal of camshaft for:

- Scoring
- Scuffing
- Cracks
- Other signs of wear.

Measure camshaft bearing journal and lobe height using a micrometer.

Measure clearance between both ends of camshaft and cylinder head.

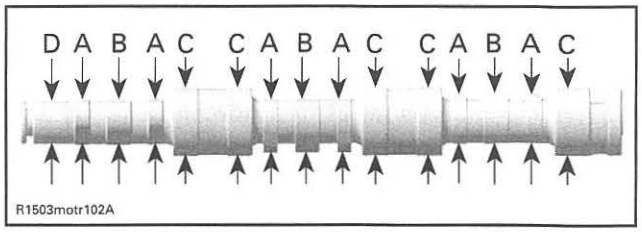

A. Camshaft lobe (exhaust valves)
B. Camshaft lobe (intake valves)
C. Camshaft bearing journal
D. Camshaft bearing journal — engine front

CAMSHAFT LOBE HEIGHT — EXHAUST VALVE	
NEW	31.430 mm to 31.630 mm (1.2374 in to 1.2453 in)
SERVICE LIMIT	31.380 mm (1.2354 in)
CAMSHAFT LOBE HEIGHT — INTAKE VALVE	
NEW	31.540 mm - 31.740 mm (1.2417 in - 1.2496 in)
SERVICE LIMIT	31.50 mm (1.2402 in)
CAMSHAFT BEARING JOURNAL	
NEW	39.892 mm - 39.905 mm (1.5706 in - 1.5711 in)
SERVICE LIMIT	39.880 mm (1.5701 in)
CAMSHAFT BEARING JOURNAL (ENGINE FRONT)	
NEW	24.939 mm - 24.960 mm (.9819 in - .9827 in)
SERVICE LIMIT	24.910 mm (.9807 in)
CAMSHAFT BEARING INNER DIAMETER	
NEW	40.000 mm - 40.020 mm (1.5748 in - 1.5756 in)
SERVICE LIMIT	40.050 mm (1.5768 in)
CAMSHAFT BEARING INNER DIAMETER (ENGINE FRONT)	
NEW	25.000 mm - 25.013 mm (.9843 in - .9848 in)
SERVICE LIMIT	25.050 mm (.9862 in)

Replace parts that are not within specifications.

Camshaft Installation

For installation, reverse the removal procedure. Pay attention to the following details.

Grease the camshaft bearing journals well by using the ISOFLEX GREASE TOPAS NB 52 (P/N 293 550 021) or a similar product.

Install camshaft then place the camshaft lock in its slot.

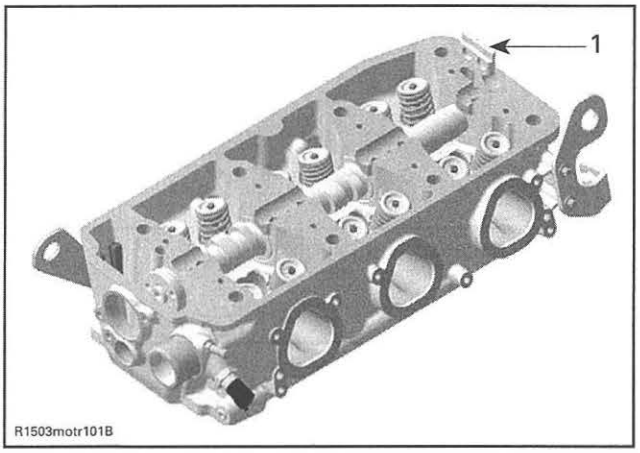

1. Camshaft lock

For other parts, refer to the proper installation procedures in this subsection.

CYLINDER HEAD

Cylinder Head Removal

Lock crankshaft, refer to *CYLINDER BLOCK* subsection.

Drain coolant, refer to *COOLING SYSTEM* subsection.

Remove blow-by valve from cylinder head. Refer to *LUBRICATION SYSTEM* subsection.

Unplug the camshaft position sensors (CAPS).

Unplug the coolant temperature sensor (CTS).

Disconnect bleeding hose.

Disconnect the cylinder head outlet hose.

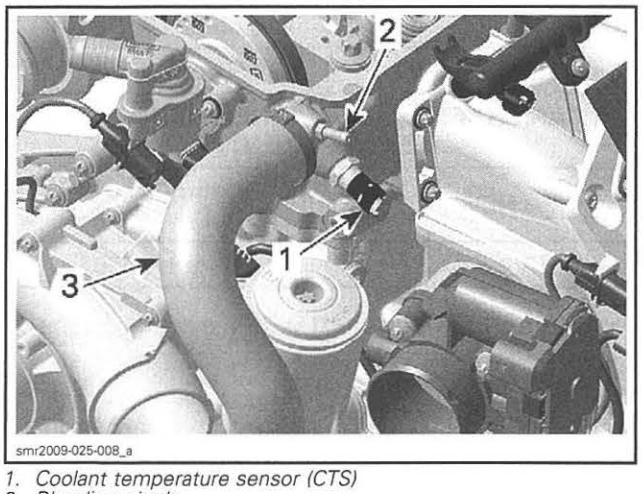

1. Coolant temperature sensor (CTS)
2. Bleeding nipple
3. Cylinder head outlet hose

Remove the intake manifold. Refer to *INTAKE MANIFOLD* subsection.

Remove the exhaust manifold. Refer to *EXHAUST SYSTEM* subsection.

Unscrew the oil filler tube support from cylinder head.

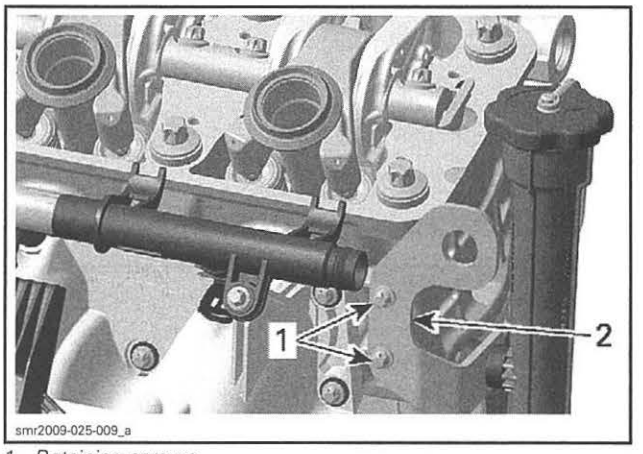

1. Retaining screws
2. Oil filler tube support

Remove the *CAMSHAFT TIMING GEAR*, see procedure in this subsection.

Remove the M6 cylinder head screws.

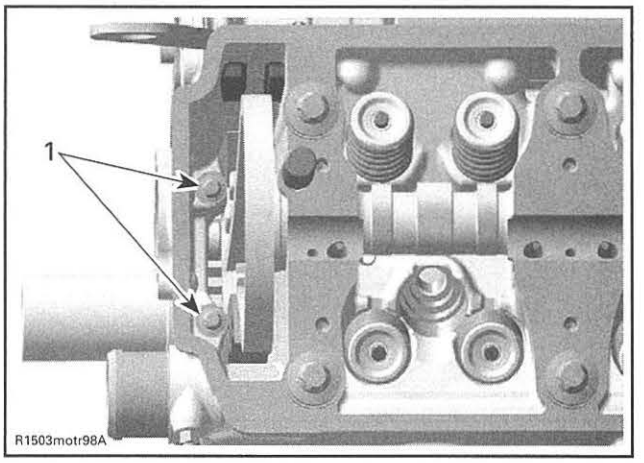

1. M6 cylinder head screws

Remove and discard the M11 cylinder head screws securing cylinder head to cylinder block.

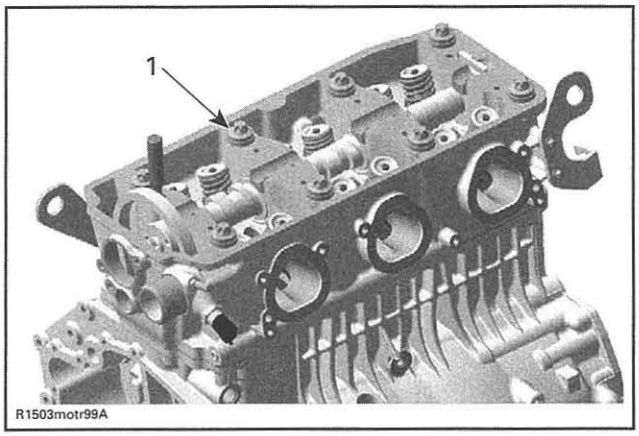

1. M11 cylinder head screws

Pull up cylinder head.

Remove and discard gasket.

Cylinder Head Cleaning

Remove carbon deposits from combustion chamber, exhaust port and piston top.

Clean cylinder head, especially cylinder head screw surface from oil spillage.

Blow out the oil orifices and check if they are not clogged.

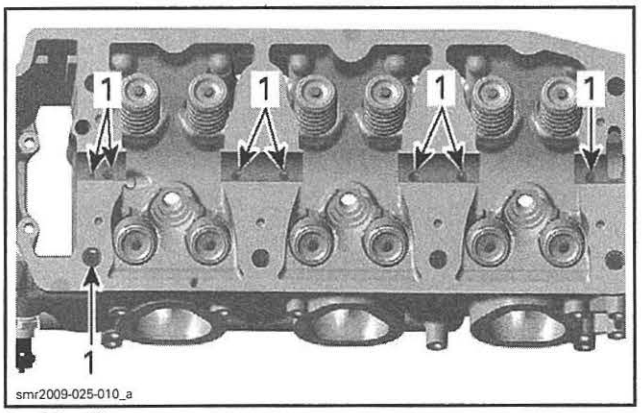

1. Oil orifices

Cylinder Head Inspection

Check for cracks between valve seats or other damages, if so, replace cylinder head.

Check cylinder head mating surface for flatness, using a straight edge.

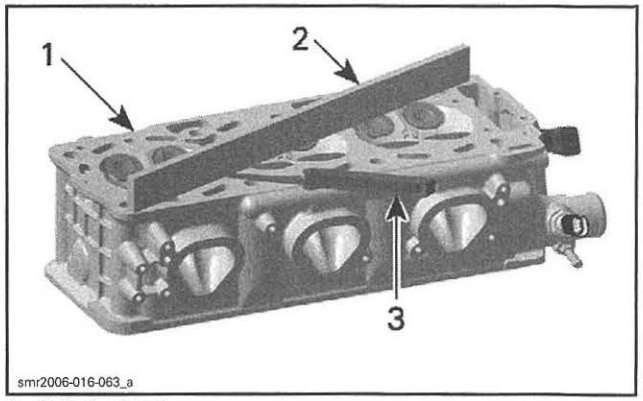

1. Cylinder head
2. Flat bar
3. Feeler gauge

Check cylinder head warpage.

CYLINDER HEAD WARPAGE	
Maximum	0.15 mm (.006 in)

If warpage exceeds specification, resurface the cylinder head as follows.

Use a 400 - 600 grit wet sandpaper on a surface plate and gently grind off the mating surface.

NOTE: To ensure an even surface, rotate cylinder head several times during resurfacing.

Replace cylinder head, if resurfacing fails.

Cylinder Head Installation

For installation, reverse the removal procedure. Pay attention to the following details.

Ensure dowel pins are in place.

Install **NEW** cylinder head gasket.

NOTICE Each installation of the cylinder head requires a new cylinder head gasket. Using a gasket twice will cause engine damage, even if the engine had not run.

Apply LOCTITE 243 (BLUE) (P/N 293 800 060) on threads of M6 cylinder head screws.

Install M6 screws and manually tighten them.

Install **NEW** M11 cylinder head screws and tighten them manually.

NOTICE This assembly uses stretch screws. As the M11 screws have been stretched from the previous installation, it is very important to replace the old screws by new ones at assembly. Failure to replace screws and to strictly follow the torque procedure may cause screws to loosen and lead to engine damage.

Using the following sequence, tighten screws as described below.

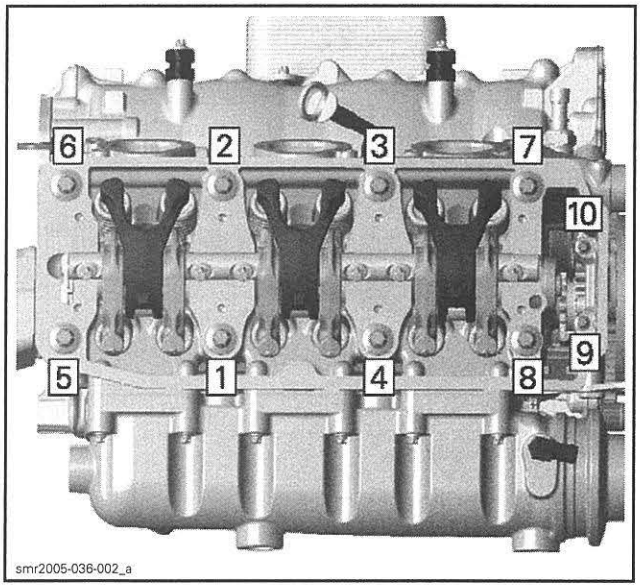

NOTE: Always perform a step on **ALL** M11 cylinder head screws before going to the next step.

TIGHTENING TORQUE		
M11 cylinder head screws	Step 1	40 N•m (30 lbf•ft)
	Step 2	Apply an additional 120° rotation
	Step 3	Apply an additional 90° rotation

Tighten M6 cylinder head screws to specification.

TIGHTENING TORQUE	
M6 cylinder head screws	9 N•m (80 lbf•**in**)

Remove crankshaft and camshaft locking tools.

Install all removed parts.

VALVE SPRINGS

Valve Spring Removal

Remove rocker arm shaft. Refer to *ROCKER ARM* procedure in this subsection.

Remove *CYLINDER HEAD*, see procedure in this subsection.

Compress valve springs.

REQUIRED TOOL	
VALVE SPRING COMPRESSOR (P/N 529 035 724)	
VALVE SPRING COMPRESSOR CUP (P/N 529 036 073)	

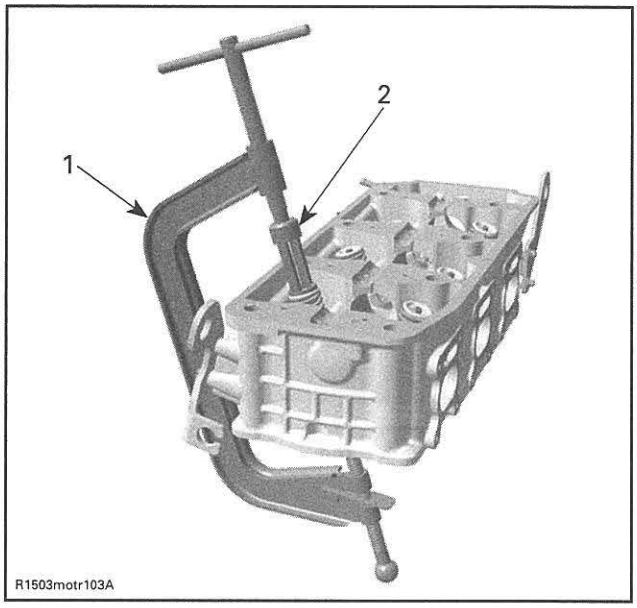

1. Valve spring compressor clamp
2. Valve spring compressor cup

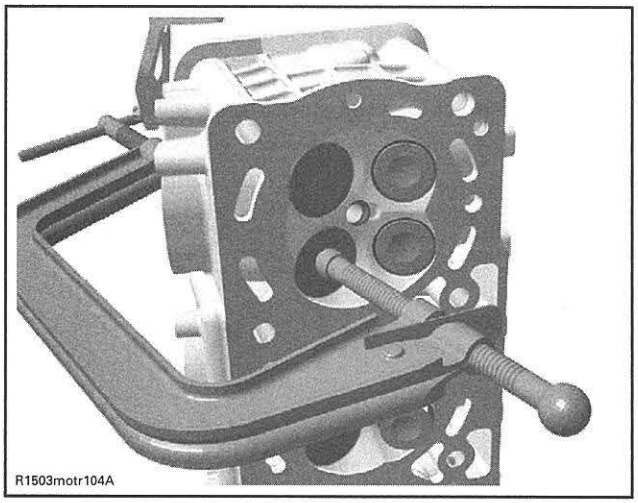

LOCATE VALVE SPRING COMPRESSOR CLAMP IN CENTER OF THE VALVE

Remove valve cotters.

Withdraw valve spring compressor, valve spring retainer and valve springs.

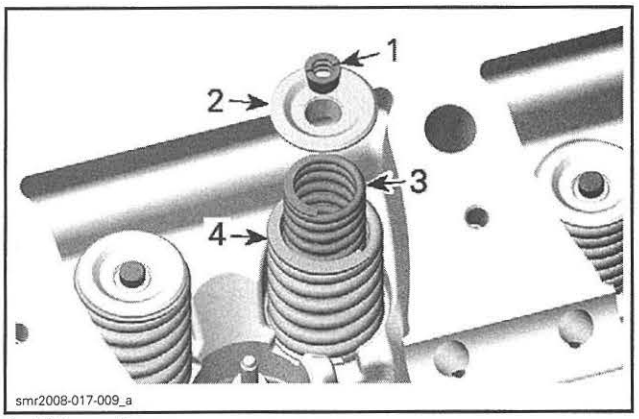

1. *Valve cotters*
2. *Valve spring retainer*
3. *Inner valve spring*
4. *Outer valve spring*

Valve Spring Inspection

Check valve springs for rust, corrosion or other visible damages. If so, replace faulty valve springs.

Check valve springs for free length and straightness.

Replace valve springs if not within specifications.

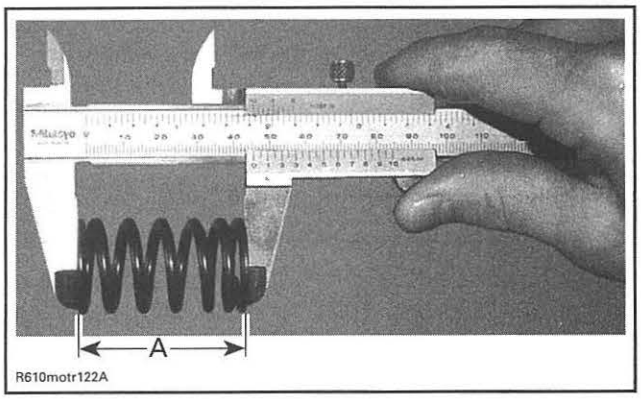

A. Valve spring length

OUTER VALVE SPRING FREE LENGTH	
NEW NOMINAL	45.45 mm (1.789 in)
SERVICE LIMIT	43.00 mm (1.693 in)
INNER VALVE SPRING FREE LENGTH	
NEW NOMINAL	41.02 mm (1.615 in)
SERVICE LIMIT	38.8 mm (1.528 in)

Valve Spring Installation

For installation, reverse the removal procedure. Pay attention to the following details.

Colored area of the valve spring must be placed on top.

NOTE: Valve cotters must be properly engaged in valve stem grooves.

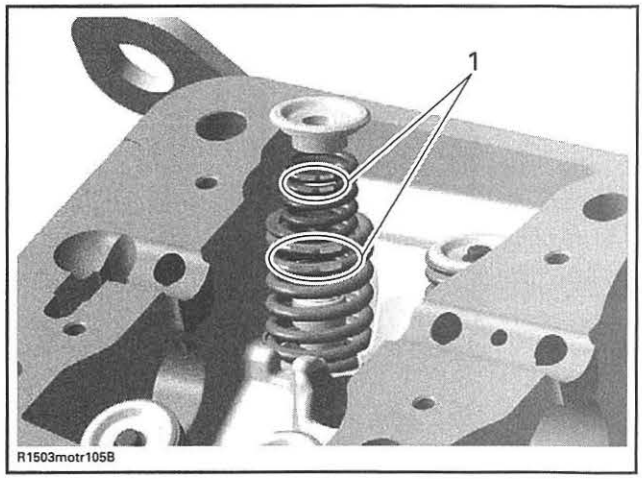

1. Position of the valve spring

VALVES

Valve Removal

Remove valve spring.

Push valve stem then pull valves out of valve guides.

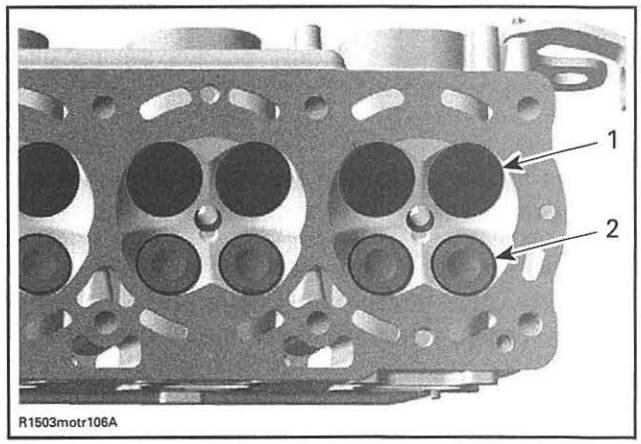

1. *Intake valve 38 mm*
2. *Exhaust valve 31 mm*

Remove and discard valve stem seal.

RECOMMENDED TOOL
SNAP-ON VALVE STEM SEAL PLIERS (P/N YA8230)

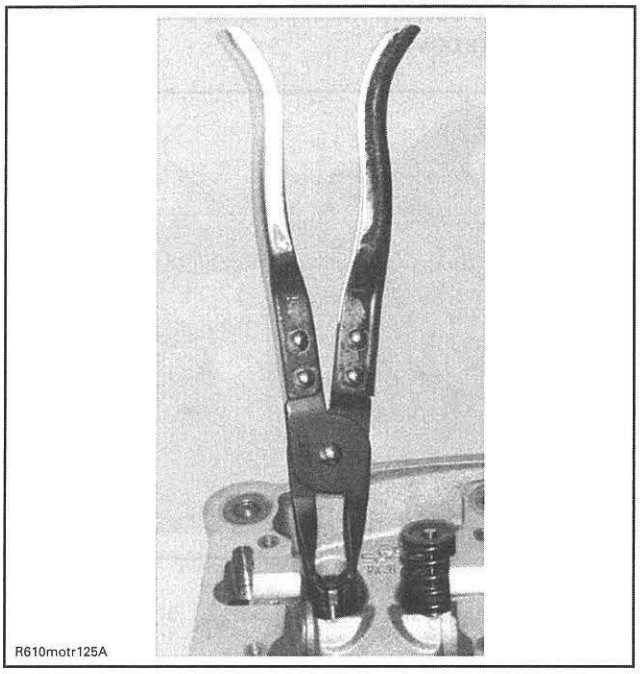
R610motr125A

Valve Inspection

Valve Stem Seal

Always install **NEW** seals whenever valves are removed.

Inspection of valve stem seals is not needed because **NEW** seals should always be installed whenever cylinder head is removed.

Valve

Inspect valve surface, check for abnormal stem wear and bending. If so, replace by a new one.

Valve Stem and Valve Guide Clearance

Measure valve stem and valve guide in three places, using a micrometer and a small bore gauge.

NOTE: Clean valve guide to remove carbon deposits before measuring.

Change valve if valve stem is out of specification or has other damages such as wear or friction surface.

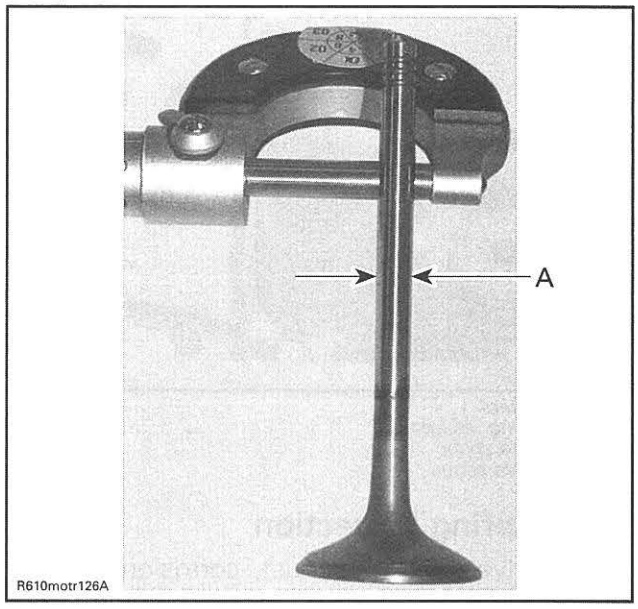

R610motr126A

A. Valve stem diameter

VALVE STEM DIAMETER	
NEW	
EXHAUST	5.946 mm - 5.960 mm (.2341 in - .2346 in)
INTAKE	5.961 mm - 5.975 mm (.2347 in - .2352 in)
SERVICE LIMIT	
EXHAUST	5.93 mm (.233 in)
INTAKE	

Replace valve guide if it is out of specification or has other damages such as wear or friction surface. Refer to *VALVE GUIDE* in this subsection.

VALVE GUIDE INNER DIAMETER	
NEW	
EXHAUST	5.994 mm - 6.018 mm (.236 in - .2369 in)
INTAKE	
SERVICE LIMIT	
EXHAUST	6.060 mm (.2386 in)
INTAKE	

Valve Face and Seat

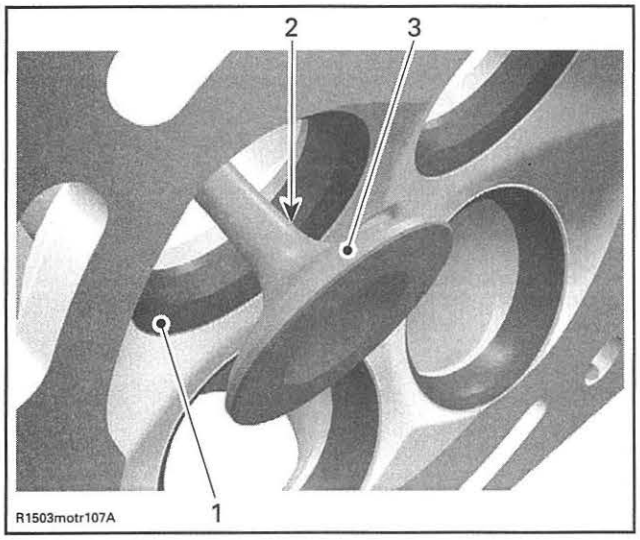

1. Valve seat
2. Exhaust valve contaminated area
3. Valve face (contact surface to valve seat)

Check valve face and seat for burning or pittings and replace valve or cylinder head if there are signs of damage.

Ensure to seat valves properly. Apply some lapping compound on valve face and work valve on its seat with a lapping tool.

Measure valve face contact width.

NOTE: The location of contact area should be in center of valve seat.

Measure valve seat width, using a caliper.

VALVE SEAT CONTACT WIDTH	
NEW	
EXHAUST	1.25 mm - 1.55 mm (.049 in - .061 in)
INTAKE	1.10 mm - 1.30 mm (.043 in - .051 in)
SERVICE LIMIT	
EXHAUST	1.8 mm (.071 in)
INTAKE	1.6 mm (.063 in)

If valve seat contact width is too wide or has dark spots, replace the cylinder head.

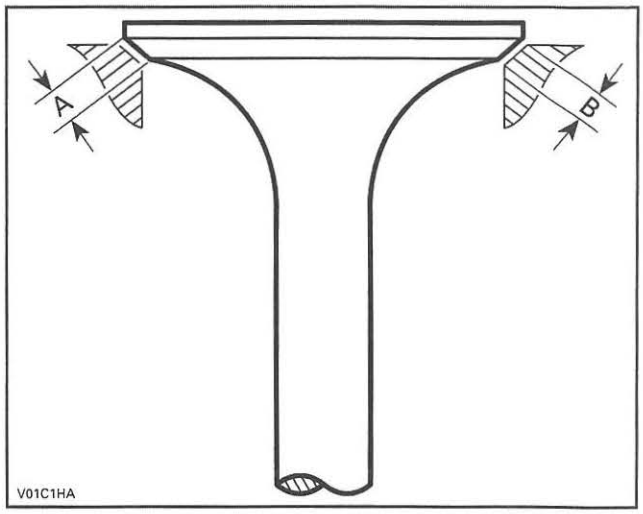

A. Valve face contact width
B. Valve seat contact width

Valve Seat Grinding

NOTE: The valve seats may be reground with a valve seat grinder which centers on the valve guide.

1. Grind the valve seat at 45°. Remove no more material than absolutely necessary to clean the seat up.
2. Using a 35° stone, narrow the valve seat until the appropriate outer diameter is obtained.

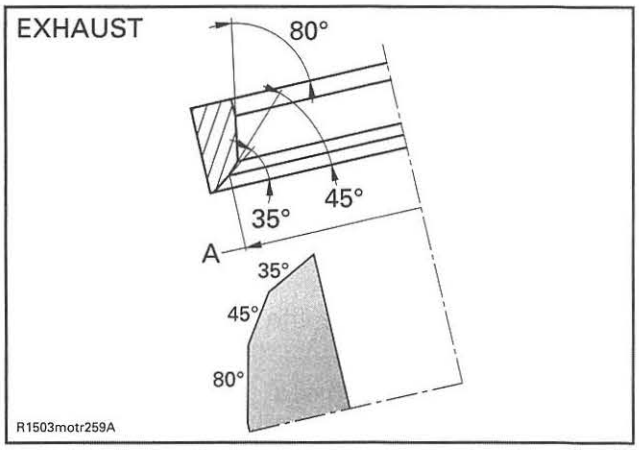

A. Valve seat outer diameter EXHAUST

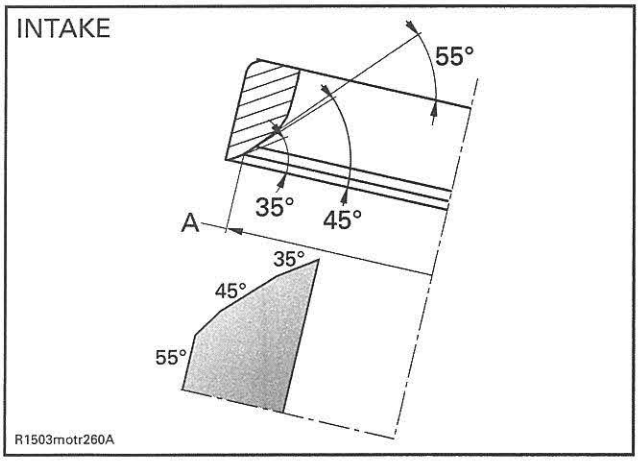

A. Valve seat outer diameter INTAKE

VALVE SEAT OUTER DIAMETER	
INTAKE	37.35 mm (1.4705 in)
EXHAUST	30.3 mm (1.1929 in)

3. Using a 55° stone for the intake and an 80° stone for the exhaust valve, reduce the valve seat contact width to the appropriate value mentioned above.
4. Finally, coat the valve seating surface with a fine paste of valve grinding compound using a manual valve grinding mandrel. Lightly grind the valves until a smooth, even, uniform sealing surface of the appropriate inside and outside diameter is obtained on both the valve and the seat. Use only a hand held valve grinding mandrel with a suction cup, rotating the valve back and forth through about 45°, and then advancing the valve 45° before repeating this operation.

Valve Installation

For installation, reverse the removal procedure. Pay attention to the following details.

Install NEW valve stem seal.

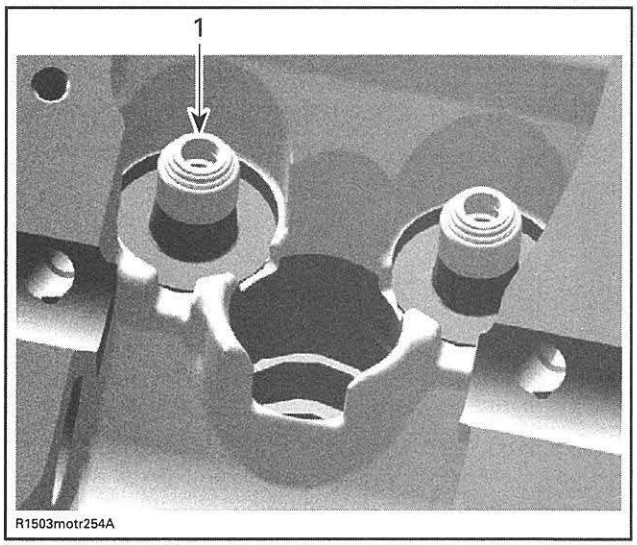

1. Valve stem seal

Apply engine oil on valve stem and install valve.

NOTICE Be careful when valve stem is passed through sealing lips of valve stem seal.

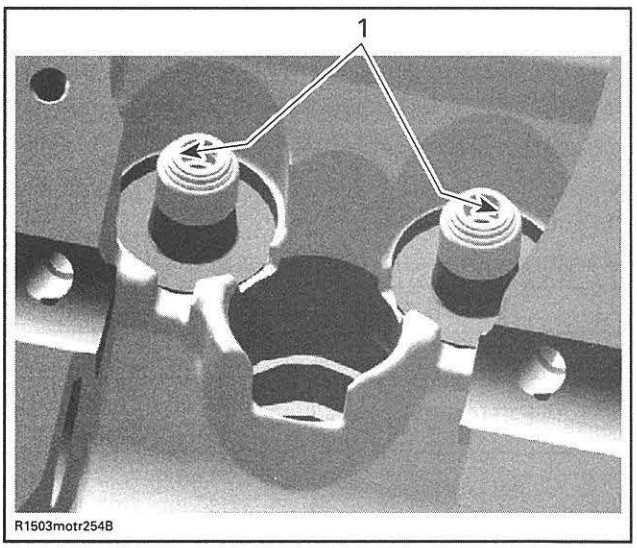

1. Sealing lips of valve stem seal

To ease installation of cotters, apply oil or grease on them so that they remain in place while releasing the spring.

After springs are installed, ensure valve springs and valve spring retainer are properly locked by tapping on valve stem end with a soft hammer so that valve opens and closes a few times.

NOTICE An improperly locked valve spring will cause engine damage.

VALVE GUIDE

Valve Guide Replacement

NOTICE Do not heat cylinder head for this procedure.

NOTICE The sharp edge near the top of the valve guide must be machined away. Otherwise it will foul the valve guide hole in the cylinder head and destroy the cylinder head, as the valve guide is removed.

Use a special reamer as far as the top of the notch.

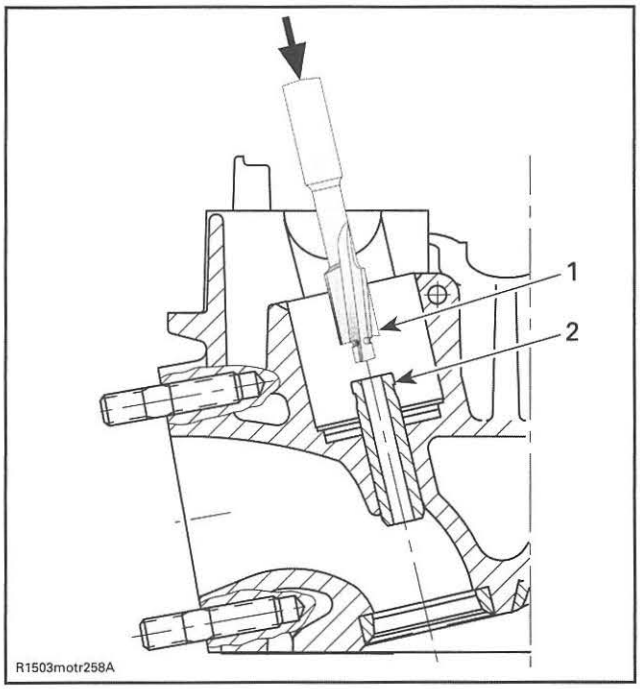

TYPICAL
1. Special reamer
2. Notch

Chase valve guide out of the cylinder head towards combustion chamber.

REQUIRED TOOL	
VALVE GUIDE REMOVER (6 MM) (P/N 529 036 086)	

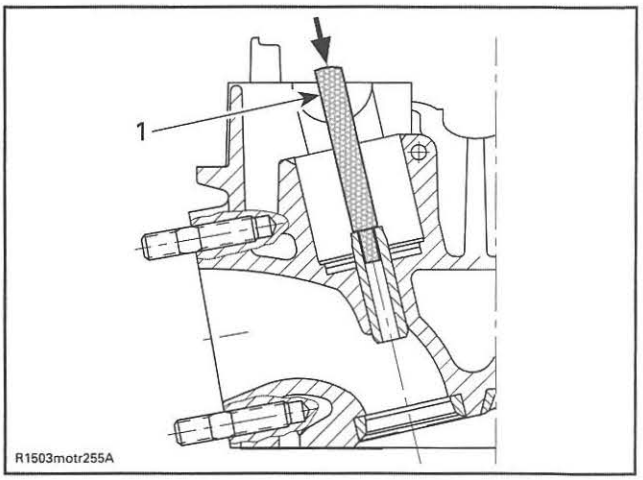

TYPICAL
1. Punch

Check valve guide bore for abreased material. The inlet and exhaust valve guides have the same length and are interchangeable.

NOTE: If valve guide has caused scoring during extraction, replace the cylinder head.

Grease the bore in cylinder head and the leading end of valve guide with MOLYKOTE G-N (P/N 420 297 433).

Press the valve guide into the **COLD** cylinder head as shown.

REQUIRED TOOL	
VALVE GUIDE PUSHER (6 MM) (P/N 529 036 087)	

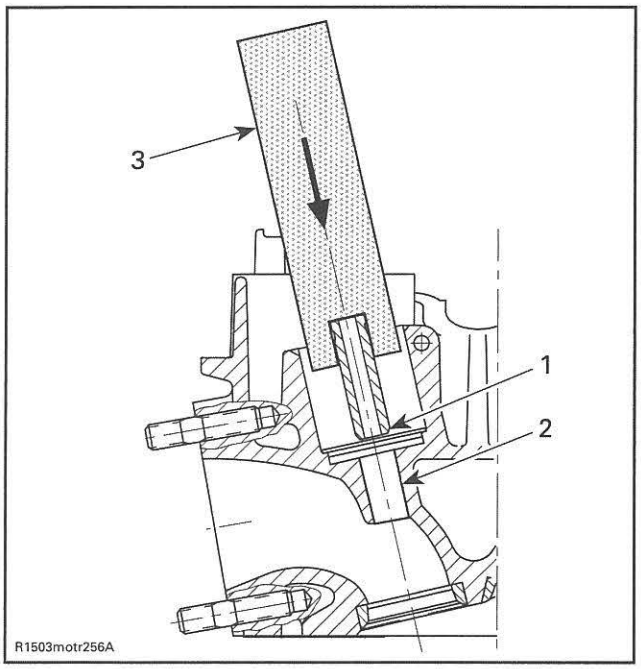

TYPICAL
1. *Valve guide leading end*
2. *Cylinder head bore*
3. *Jig*

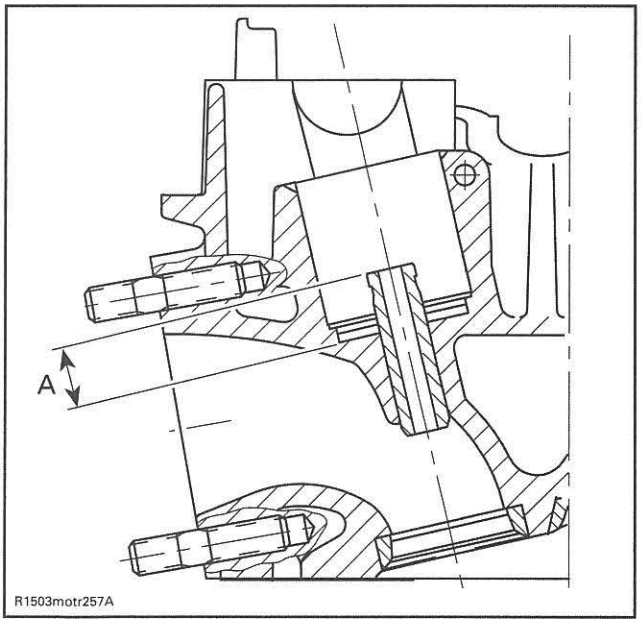

TYPICAL
A. Protrusion

VALVE GUIDE PROTRUSION	
MINIMUM	12.4 mm (.4882 in)
MAXIMUM	12.8 mm (.5039 in)

NOTE: After installing new guides, they must be reamed with a standard 6 mm reamer tool. These are available from various tool suppliers.

Clean cylinder head carefully. Check that the valve seat is concentric with the new guide axis (check contact surface with engineer's blue).

CYLINDER BLOCK

SERVICE TOOLS

Description	Part Number	Page
CRANKSHAFT LOCKING TOOL	529 035 821	180, 183, 189
PISTON CIRCLIP INSTALLER	529 035 765	177

SERVICE TOOLS – OTHER SUPPLIER

Description	Part Number	Page
SNAP-ON PISTON RING COMPRESSOR PLIERS	RC980	177

SERVICE PRODUCTS

Description	Part Number	Page
LOCTITE 243 (BLUE)	293 800 060	188
LOCTITE 5910	293 800 081	187
LOCTITE CHISEL (GASKET REMOVER)	413 708 500	187

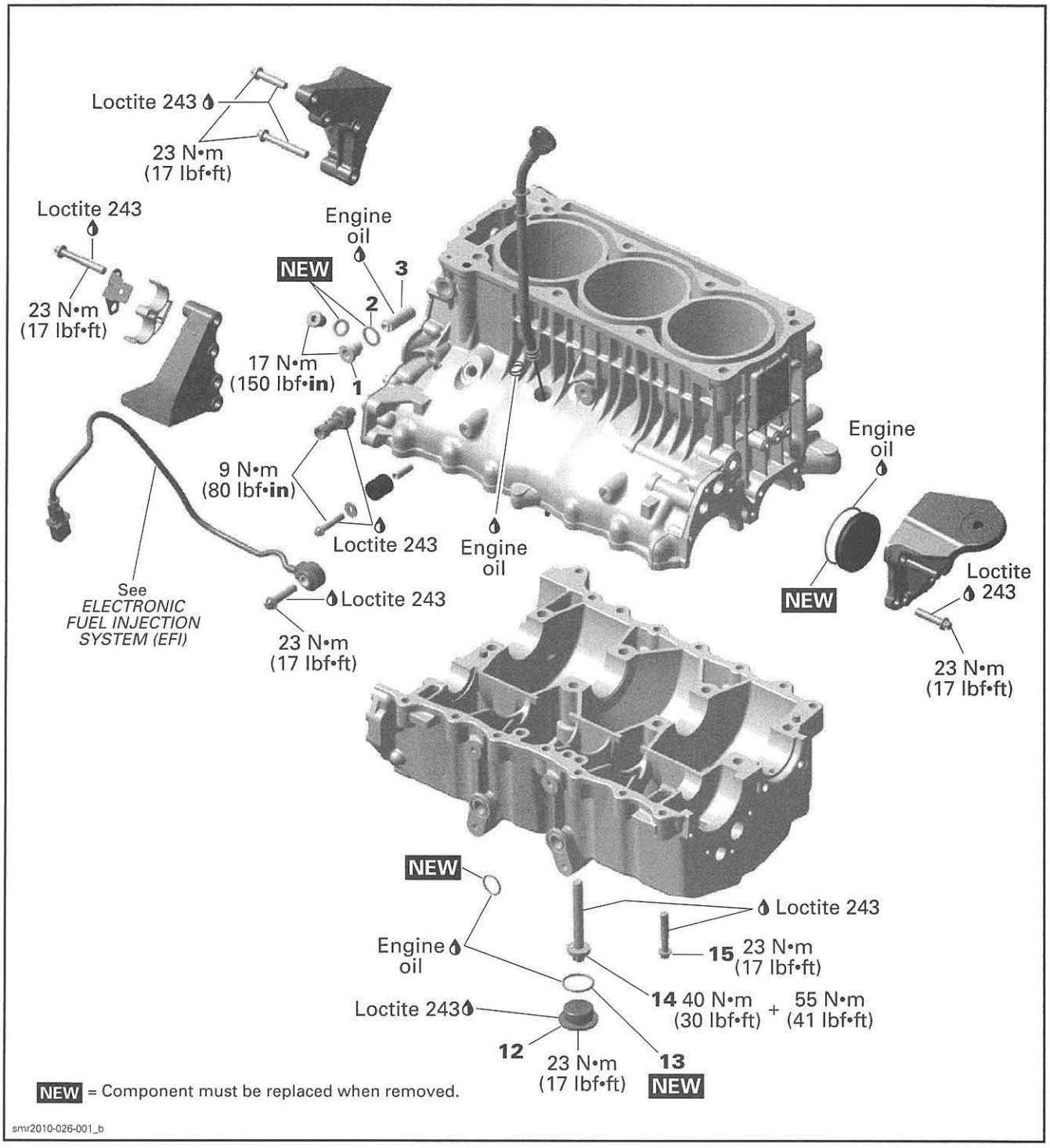
Loctite 243
23 N•m
(17 lbf•ft)
Loctite 243
23 N•m
(17 lbf•ft)
Engine
oil
NEW
3
2
17 N•m
(150 lbf•in)
1
9 N•m
(80 lbf•in)
Loctite 243
Engine
oil
See
ELECTRONIC
FUEL INJECTION
SYSTEM (EFI)
Loctite 243
23 N•m
(17 lbf•ft)
Engine
oil
NEW
Loctite
243
23 N•m
(17 lbf•ft)
NEW
Loctite 243
Engine
oil
15 23 N•m
(17 lbf•ft)
14 40 N•m
(30 lbf•ft) + 55 N•m
(41 lbf•ft)
Loctite 243
12
23 N•m
(17 lbf•ft)
13
NEW
NEW = Component must be replaced when removed.
smr2010-026-001_b

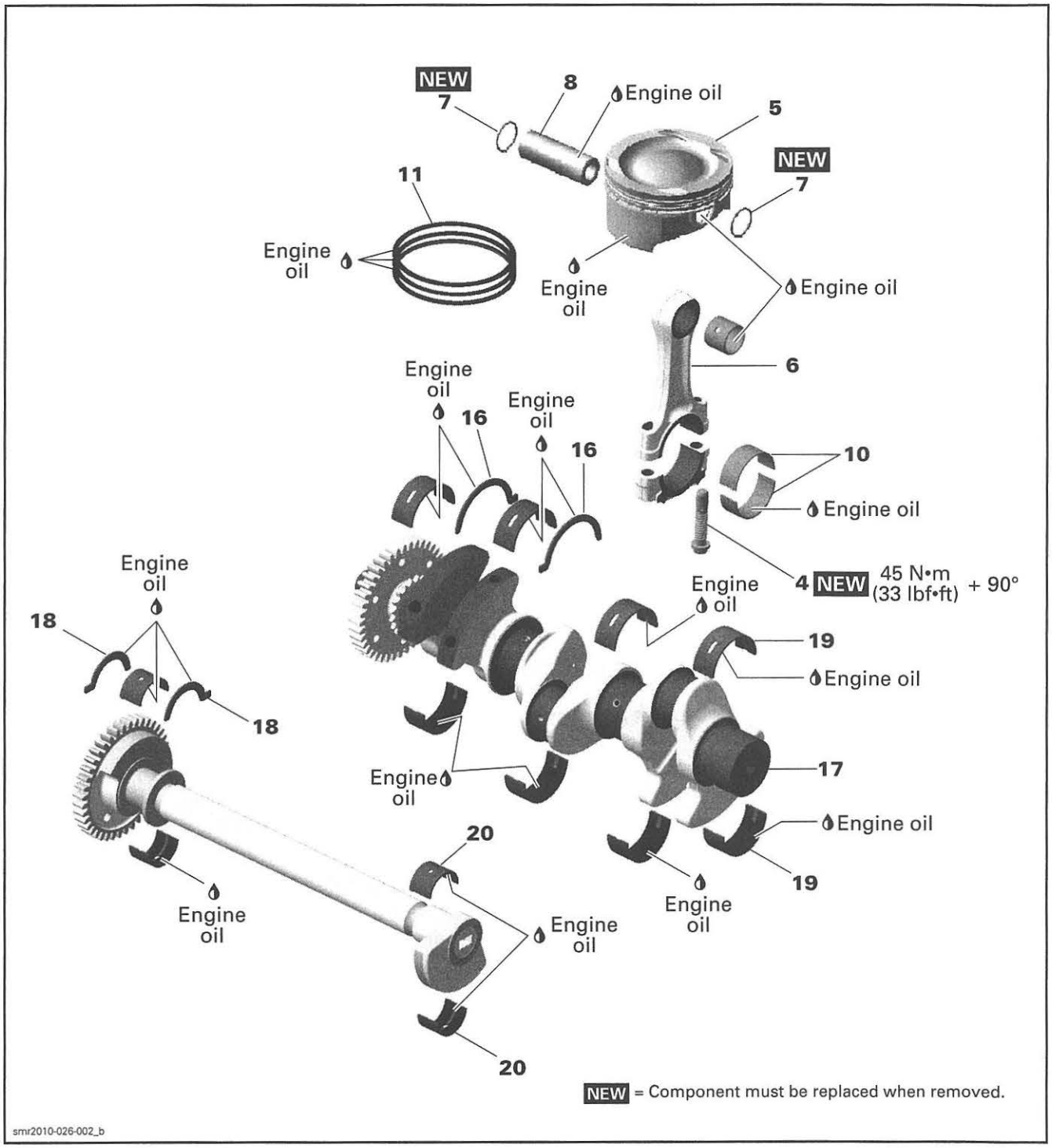
NEW
7
8
Engine oil
5
NEW
7
11
Engine oil
Engine oil
Engine oil
6
Engine oil
16
Engine oil
16
10
Engine oil
4 NEW 45 N•m (33 lbf•ft) + 90°
Engine oil
18
Engine oil
18
19
Engine oil
Engine oil
17
Engine oil
19
20
Engine oil
Engine oil
Engine oil
20
NEW = Component must be replaced when removed.
smr2010-026-002_b

GENERAL

When disassembling parts that are duplicated in the engine, (e.g.: pistons, connecting rods etc.), it is strongly recommended to note their position and to keep them as a "group". If you find a defective component, it will be much easier to find the cause of the failure. Since parts were break-in together during the engine operation, they will keep their matched fit when parts are reassemble together within their "group".

TROUBLESHOOTING

The following is provided to help in diagnosing the probable source of troubles. It is a guideline and it should not be assumed to list all possible problems.

Always check for fault codes. If a fault code is detected, service the fault code first. Refer to *DIAGNOSTIC AND FAULT CODES* subsection.

UNUSUAL ENGINE NOISE OR VIBRATIONS

1. Heavy wear on plain bearings
   - *Check radial play of plain bearings.*
   - *Replace plain bearings if out of specification.*
2. Crankshaft and balancer shaft are not properly aligned
   - *Disassemble cylinder block and check if marks are properly aligned.*
3. Crankshaft or balancer shaft axial play out of specification
   - *Measure crankshaft and balancer shaft axial play.*
   - *If axial play is out of specification, replace thrust washers.*
4. Connecting rod axial play out of specification
   - *Measure connecting rod axial play on crankshaft.*
   - *Replace connecting rod or crankshaft if out of specification.*
5. Connecting rod screws got loose
   - *Replace damaged components and retighten screws with the recommended torque.*

BLUE SMOKE IN THE EXHAUST

1. Oil scrapper rings worn out
   - *Replace piston rings.*

ENGINE SUDDENLY TURNS OFF (POOR IDLING)

1. Piston rings worn out
   - *Replace piston rings.*
2. Piston/cylinder wall clearance out of specification
   - *Check piston/cylinder wall clearance.*
   - *Replace if out of specification.*
3. Melted or broken piston
   - *Check if oil spray nozzle is not clogged. Refer to LUBRICATION SYSTEM subsection.*
   - *Replace piston and cylinder block if necessary.*

PROCEDURES

TIMING CHAIN

Timing Chain Inspection

Check timing chain on camshaft gear for excessive radial play.

Check chain condition for wear and rollers condition.

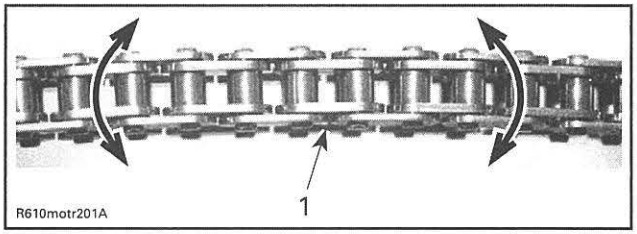

1. Timing chain

If chain is excessively worn or damaged, replace it as a set (camshaft timing gear and timing chain).

Timing Chain Removal

Remove:
- Engine oil (refer *LUBRICATION SYSTEM* subsection)
- Engine from vehicle (refer to *ENGINE REMOVAL AND INSTALLATION* subsection)
- Cylinder head (refer to *CYLINDER HEAD* subsection)
- PTO housing (refer to *PTO HOUSING AND MAGNETO* subsection)
- Crankshaft (refer to *CRANKSHAFT* in this subsection)
- Timing chain.

Timing Chain Installation

The installation is essentially the reverse of the removal procedure. However, pay attention to the following details.

Ensure to perform proper valve timing.

NOTICE **Improper valve timing will damage engine components.**

Lock crankshaft and camshaft at TDC (refer to *CYLINDER HEAD* subsection for the camshaft locking procedure).

Install chain, then install chain tensioner.

CHAIN TENSIONER

Chain Tensioner Removal

NOTE: Removal of the intake manifold allows easier access to the chain tensioner, but is not necessary. Refer to *INTAKE MANIFOLD* subsection.

Remove:

- Chain tensioner plug screw **no. 1**
- Gasket ring **no. 2** (discard it)
- Chain tensioner **no. 3**.

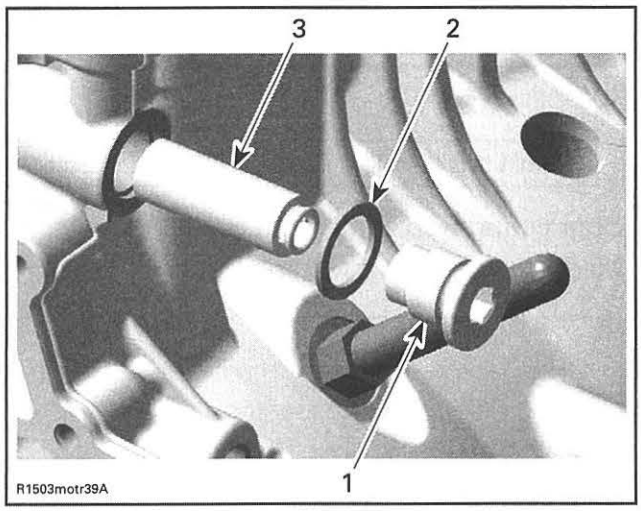

1. *Plug screw*
2. *Gasket ring*
3. *Chain tensioner*

Chain Tensioner Inspection

Check chain tensioner for excessive wear or cracks. Also check free movement of the chain tensioner piston.

Chain Tensioner Installation

The installation is essentially the reverse of the removal procedure but, pay attention to the following details.

Use a **NEW** gasket ring when installing the chain tensioner plug screw.

Tighten the chain tensioner plug screw to specification.

TIGHTENING TORQUE	
Chain tensioner plug screw	17 N•m (150 lbf•**in**)

PISTONS AND CONNECTING RODS

Piston and Connecting Rod Removal

1. Disassemble *CYLINDER BLOCK* as per procedure in this subsection.

NOTE: It is recommended to measure connecting rod big end axial play prior to remove connecting rod. Refer to *INSPECTION* below.

2. Remove connecting rod cap screws **no. 4**.

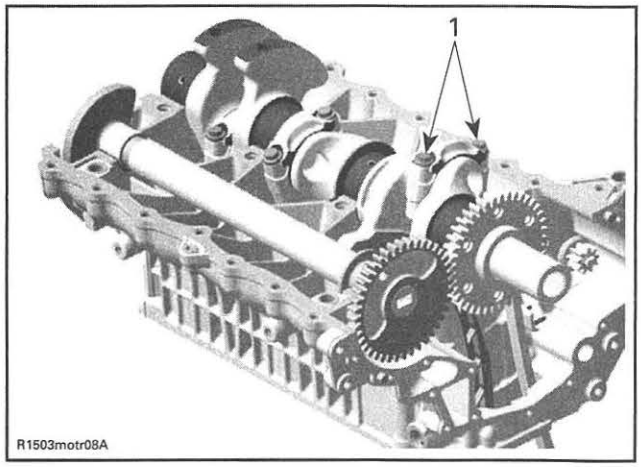

1. *Connecting rod screws*

NOTE: Before removing the connecting rod caps, mark them to remember the right position when reassembling.

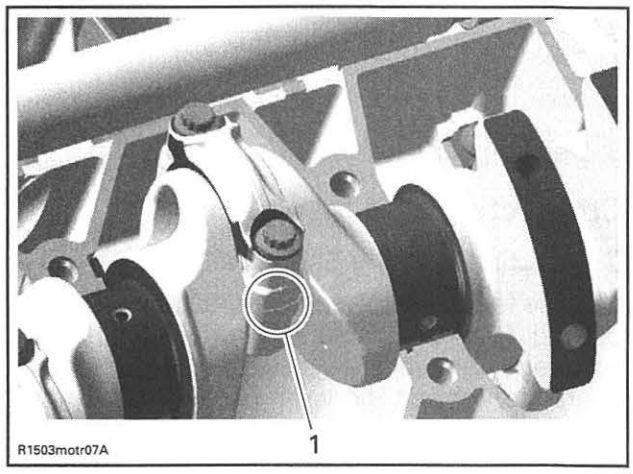

1. *Connecting rod mark*

3. Pull piston **no. 5** with connecting rod **no. 6** out of the cylinders.
4. Remove one piston circlip **no. 7** and discard it.

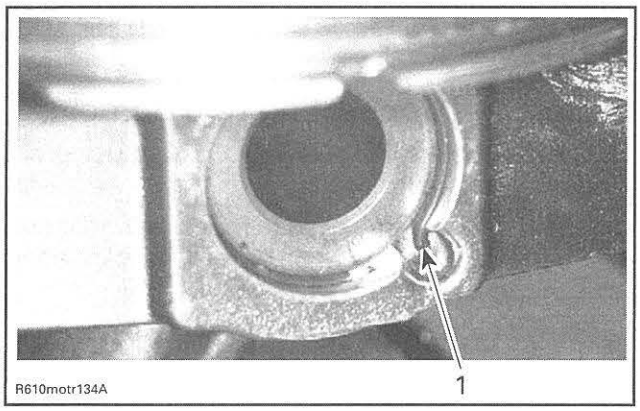

1. Piston circlip

NOTE: The removal of both piston circlips is not necessary to remove piston pin.

5. Push piston pin **no. 8** out of piston.

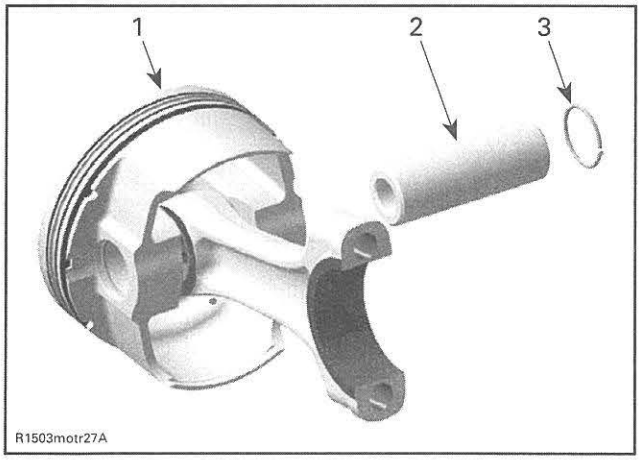

1. Piston
2. Piston pin
3. Circlip

6. Detach piston from connecting rod.

Connecting Rod Inspection

Connecting Rod Big End Axial Play

Using a feeler gauge, measure distance between butting face of connecting rod and crankshaft counterweight. If the distance exceeds specified tolerance, replace the worn part.

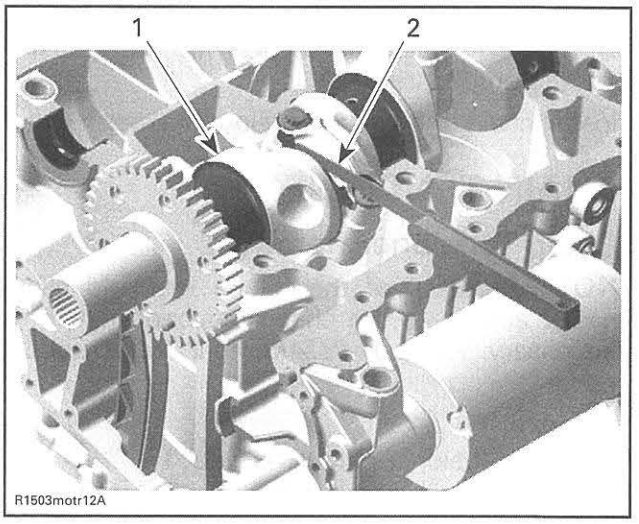

1. Crankshaft
2. Feeler gauge

CONNECTING ROD BIG END AXIAL PLAY	
NEW	0.100 mm - 0.352 mm (.004 in - .014 in)
SERVICE LIMIT	0.500 mm (.02 in)

Connecting Rod Small End Radial Play

Measure connecting rod small end.

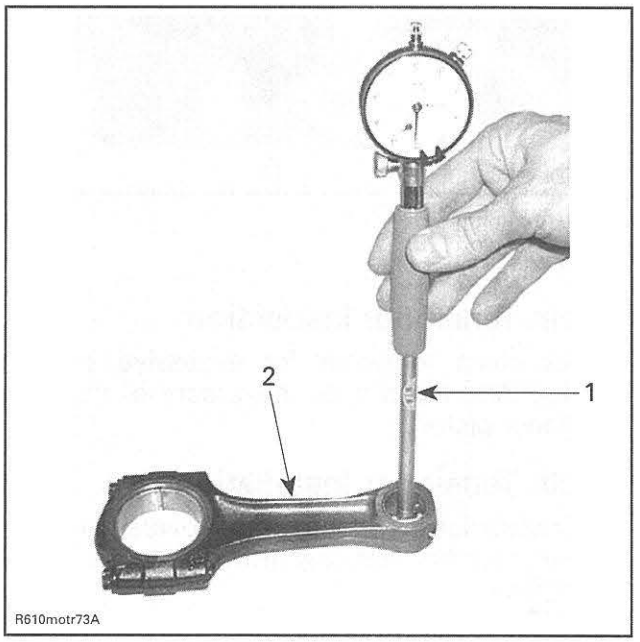

1. Bore gauge
2. Connecting rod

CONNECTING ROD SMALL END DIAMETER	
NEW	23.01 mm - 23.02 mm (.9059 in - .9063 in)
SERVICE LIMIT	23.07 mm (.908 in)

If the connecting rod small end diameter is out of specification, replace small end bearing sleeve **no. 9**.

NOTE: For small end bearing sleeve replacement contact a machine shop. After installing a **NEW** small end bearing sleeve on the connecting rod, the inner diameter and the oil holes need to be machined to specification.

Measure piston pins (refer to *PISTON PIN INSPECTION* in this subsection). Compare to inside diameter of connecting rod to obtain connecting rod small end radial play.

CONNECTING ROD SMALL END RADIAL PLAY	
SERVICE LIMIT	0.080 mm (.003 in)

Connecting Rod Big End Radial Play

Measure inside diameter of connecting rod big end. Compare to crankshaft pin.

To measure the connecting rod big end diameter, use the **OLD** screws **no. 4**.

Install the **OLD** bearings **no. 10** as they were mounted initially.

Tighten connecting rod screws, refer to *PISTON AND CONNECTING ROD INSTALLATION* in this subsection.

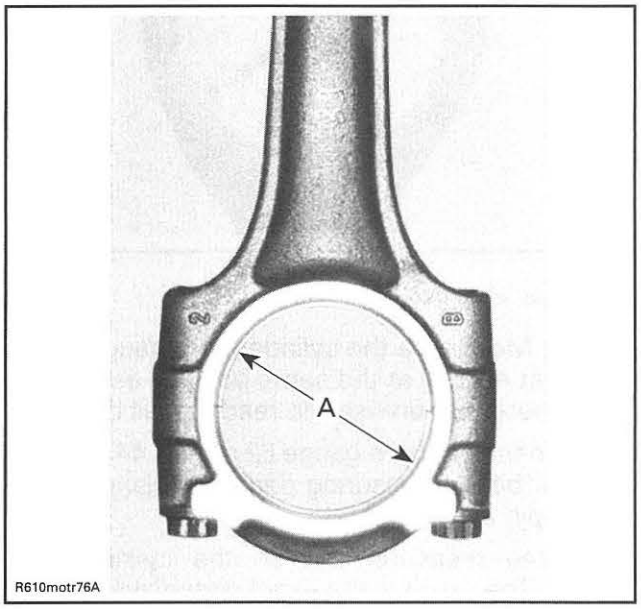

A. Connecting rod big end bearing

CONNECTING ROD BIG END DIAMETER	
SERVICE LIMIT	45.080 mm (1.775 in)

CONNECTING ROD BIG END RADIAL PLAY	
SERVICE LIMIT	0.09 mm (.0035 in)

Use **NEW** bearings, when connecting rod big end diameter is out of specification.

Piston Pin Inspection

Using synthetic abrasive woven, clean piston pin from deposits.

Inspect piston pin for scoring, cracking or other damages.

Measure piston pin. See the following illustration for the proper measurement position.

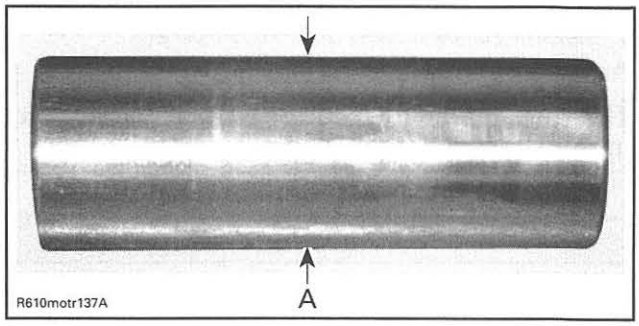

A. Piston pin diameter in the area of the bushing

PISTON PIN DIAMETER	
NEW	22.996 mm - 23.000 mm (.905 in - .906 in)
SERVICE LIMIT	22.990 mm (.905 in)

Measure connecting rod small end diameter (refer to *CONNECTING RODS INSPECTION* in this subsection) to check connecting rod small end radial play.

Piston Inspection

Inspect piston for scoring, cracking or other damages. Replace piston and piston rings if necessary.

Using a micrometer, measure piston at 18 mm (.709 in) perpendicularly (90°) to piston pin axis.

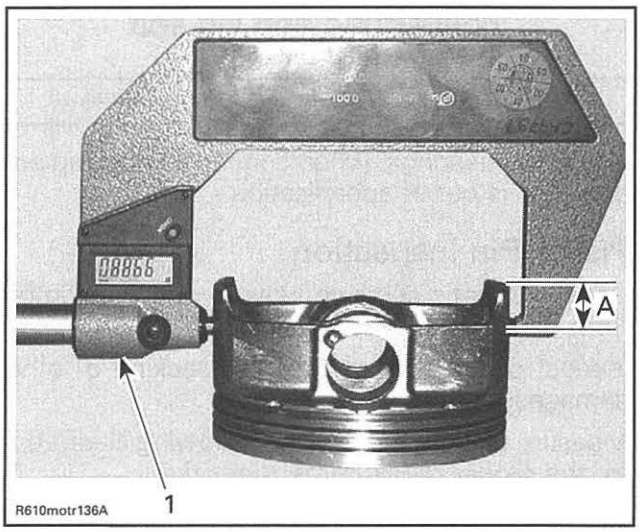

1. Measuring perpendicularly (90°) to piston pin axis
A. 18 mm (.709 in)

The measured dimension should be as described in the subsequent table. If not, replace piston.

PISTON MEASUREMENT	
130 AND 155 ENGINES	
NEW NOMINAL	99.951 mm - 99.969 mm (3.935 in - 3.936 in)
SERVICE LIMIT	99.90 mm (3.933 in)
215 AND 260 ENGINES	
NEW NOMINAL	99.931 mm - 99.949 mm (3.934 in - 3.935 in)
SERVICE LIMIT	99.90 mm (3.933 in)

Piston/Cylinder Wall Clearance

Adjust and lock a micrometer to the piston dimension.

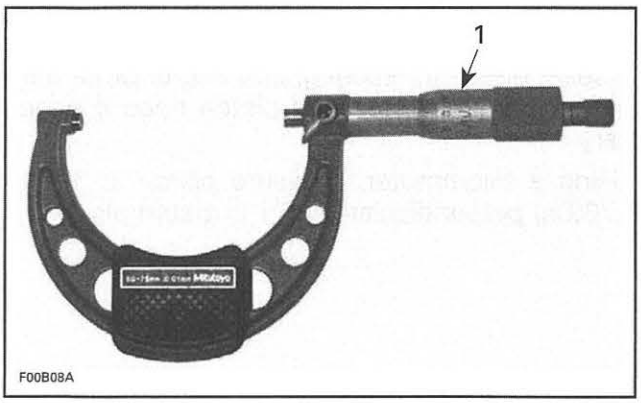

1. Micrometer set to the piston dimension

NOTE: Make sure used piston is not worn.

With the micrometer set to the dimension, adjust a cylinder bore gauge to the micrometer dimension and set the indicator to 0 (zero).

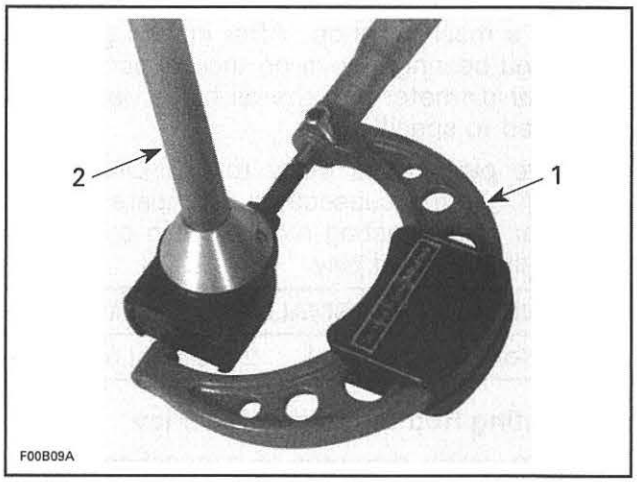

1. Use the micrometer to set the cylinder bore gauge
2. Dial bore gauge

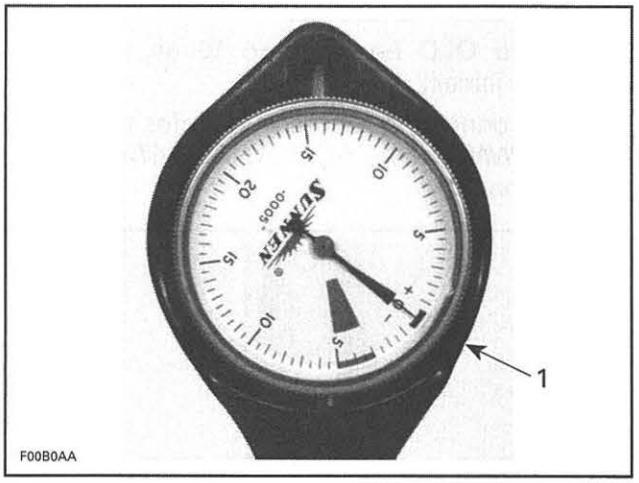

TYPICAL
1. Indicator set to 0 (zero)

NOTE: Make sure the cylinder bore gauge indicator is set exactly at the same position as with the micrometer, otherwise the reading will be false.

Position the dial bore gauge 62 mm (2.44 in) above cylinder base, measuring perpendicularly (90°) to piston pin axis.

Read the measurement on the cylinder bore gauge. The result is the exact piston/cylinder wall clearance.

PISTON/CYLINDER CLEARANCE	
130 AND 155 ENGINES	
NEW NOMINAL	0.024 mm - 0.056 mm (.001 in - .002 in)
SERVICE LIMIT	0.100 mm (.004 in)
215 AND 260 ENGINES	
NEW NOMINAL	0.044 mm - 0.076 mm (.0017 in - .003 in)
SERVICE LIMIT	0.100 mm (.004 in)

If clearance exceeds specified tolerance, re-hone cylinder sleeve and replace piston by an oversize one.

NOTE: It is not necessary to have all pistons replaced with an oversize if they are not all out of specification. Mixed standard size and oversize piston are allowed.

Piston and Connecting Rod Assembly

For installation, reverse the removal procedure. Pay attention to the following details.

Apply engine oil on the piston pin.

Insert piston pin into piston and connecting rod.

Install the NEW piston circlip.

REQUIRED TOOL
PISTON CIRCLIP INSTALLER (P/N 529 035 765)

NOTICE Secure piston pin with new piston circlips.

NOTE: Take care that the hook of the piston circlip is positioned properly.

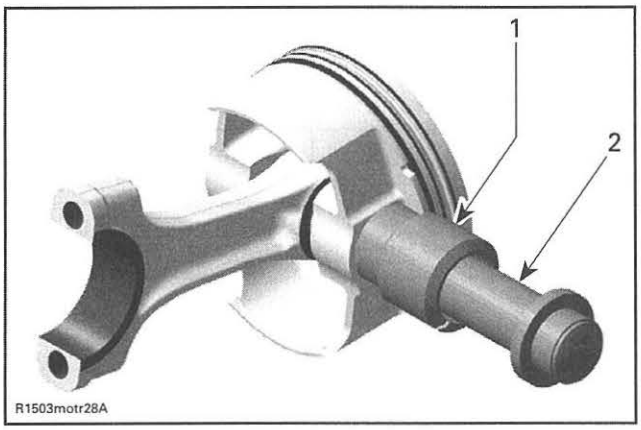

1. *Sleeve with piston circlip inside*
2. *Assembly jig from piston clip installer*

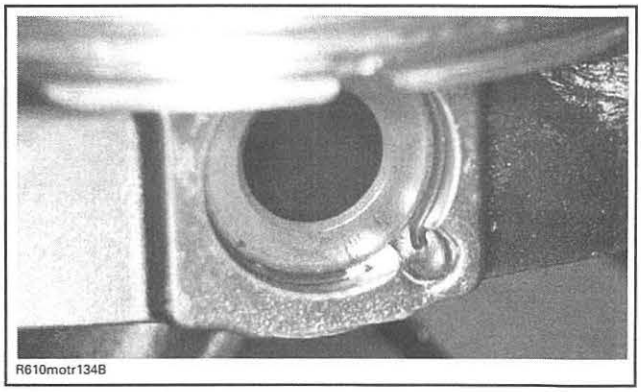

CORRECT POSITION OF THE PISTON CIRCLIP

Piston and Connecting Rod Installation

1. Using a piston ring compressor, slide piston into cylinder.

RECOMMENDED TOOL
SNAP-ON PISTON RING COMPRESSOR PLIERS (P/N RC980)

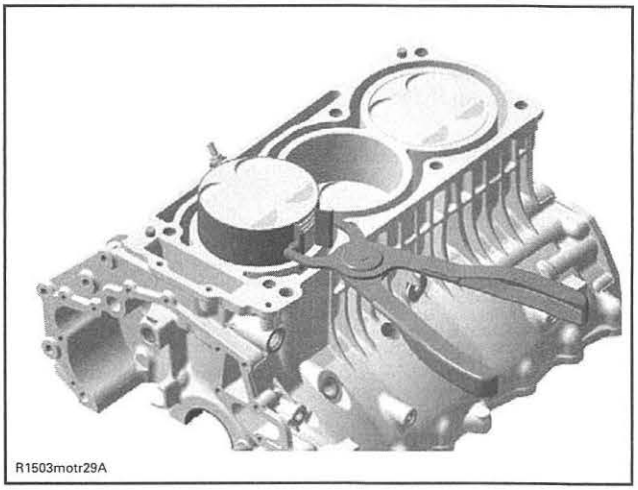

NOTICE Install piston with punched arrow toward exhaust side.

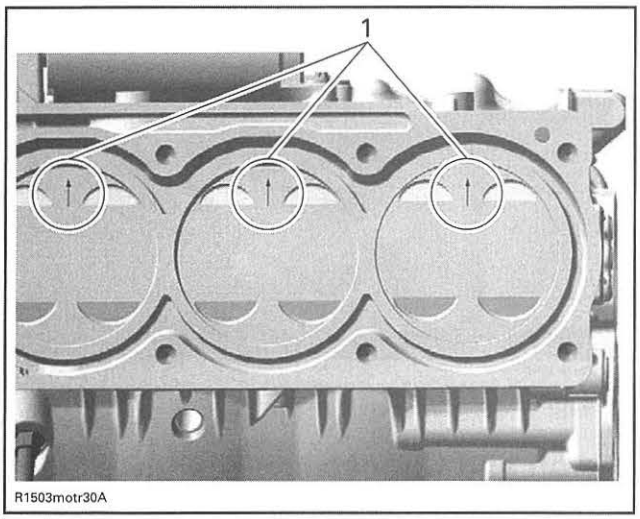

1. Arrows toward exhaust side

2. Correctly install bearings and carefully clean split surface on both sides (cracked area).

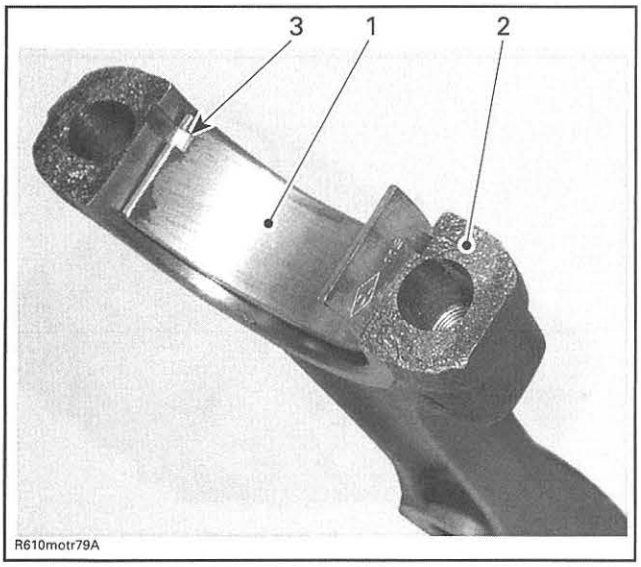

1. Half bearing of connecting rod big end
2. Split surface of the connecting rod
3. Protrusion of bearing in line with connecting rod groove

3. Torque **NEW** connecting rod screws as per following procedure:

NOTE: Do not apply any threadlocker product on threads of connecting rod screws.

NOTICE **All connecting rod screws must be torque FIRST according to step 1 before performing the step 2.**

TIGHTENING TORQUE		
Connecting rod screws	Step 1	45 N•m (33 lbf•ft)
	Step 2	+ 90°

NOTICE Failure to strictly follow this procedure may cause screw to loosen and lead to engine damage. Knowing that the screws have been stretched from the previous installation, it is very important to use new screws at assembly.

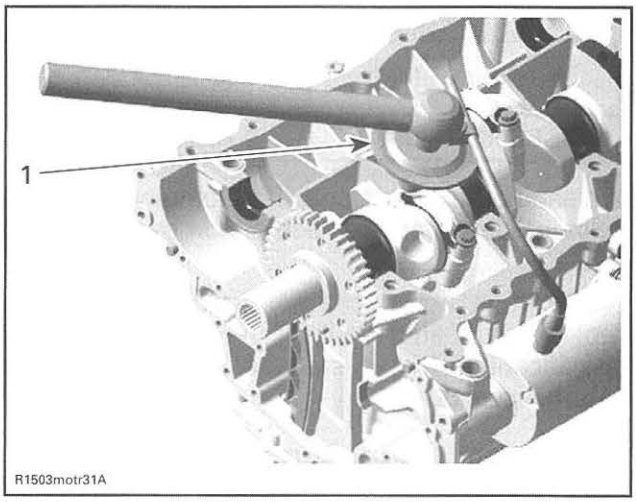

1. Angle torque wrench

PISTON RINGS

Piston Ring Removal

Remove piston as described in this subsection.

Remove rings **no. 11**.

Piston Ring Inspection

Ring/Piston Groove Clearance

Using a feeler gauge measure each ring/piston groove clearance. If the clearance is too large, the piston and the piston rings should be replaced.

RING/PISTON GROOVE CLEARANCE	
NEW	
RECTANGULAR	0.025 mm - 0.070 mm (.001 in - .0028 in)
TAPER-FACE	0.015 mm - 0.060 mm (.0006 in - .0024 in)
OIL SCRAPER RING	0.020 mm - 0.055 mm (.0008 in - .0022 in)
SERVICE LIMIT	
ALL	0.15 mm (.006 in)

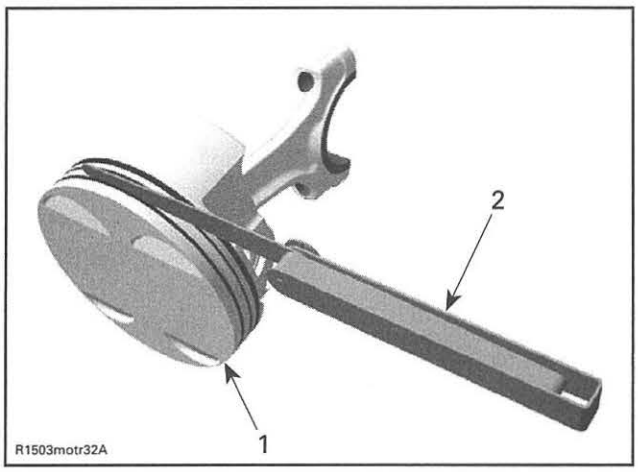

1. Piston
2. Filler gauge

Ring End Gap

RING END GAP	
NEW	
RECTANGULAR	0.30 mm - 0.50 mm (.012 in - .02 in)
TAPER-FACE	0.35 mm - 0.55 mm (.014 in - .022 in)
OIL SCRAPER RING	0.35 mm - 0.50 mm (.014 in - .02 in)
SERVICE LIMIT	
ALL	1.50 mm (.0591 in)

Measure position for ring end gap in the area of 8 mm to 16 mm (.315 in to .63 in) from top of cylinder.

NOTE: In order to correctly position the ring in the cylinder, use piston as a pusher.

Using a feeler gauge, check ring end gap. Replace ring if gap exceeds service limit.

Piston Ring Installation

For installation, reverse the removal procedure. Pay attention to the following details.

Install rings in the following order and layout:

PISTON RING INSTALLATION		
ORDER	RING	POSITION
FIRST STEP	Oil scraper ring	Stamped dot facing UP
SECOND STEP	Taper-face ring	Stamped "E" and "TOP" facing UP
THIRD STEP	Rectangular ring	Stamped "E" and "TOP" facing UP

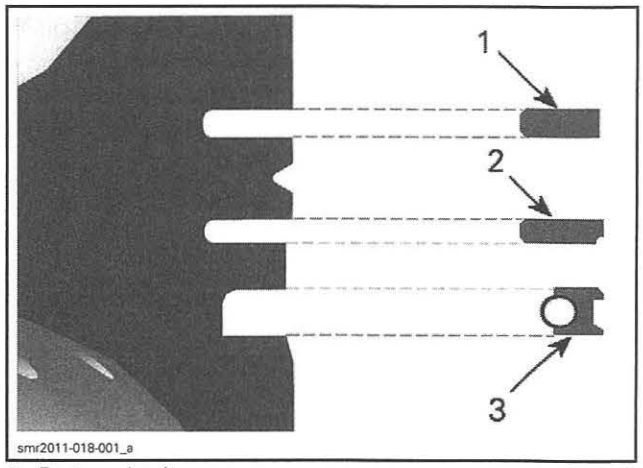

1. Rectangular ring
2. Taper-face ring
3. Oil scraper ring

NOTICE **Ensure that top and second rings are not interchanged.**

NOTE: Use a ring expander to prevent breakage during installation. The oil ring must be installed by hand.

Check that rings rotate smoothly after installation.

Space the piston ring end gaps 120° apart and do not align the gaps with the piston pin bore or the thrust side axis.

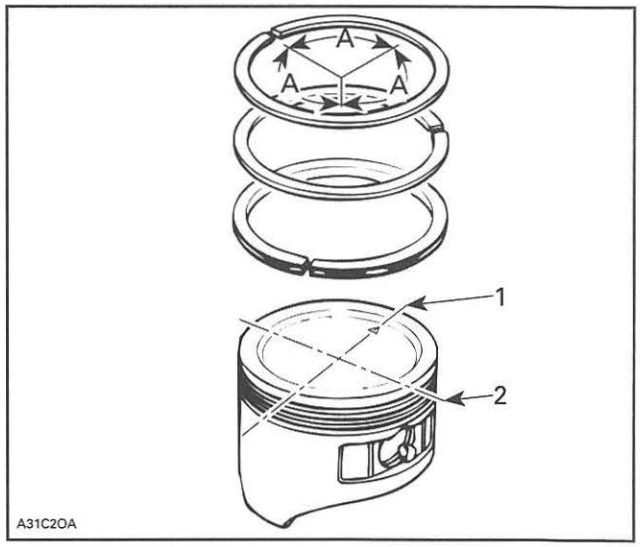

1. DO NOT align ring gap with piston trust side axis
2. DO NOT align ring gap with piston pin bore axis
A. 120°

CRANKSHAFT

Crankshaft Locking Procedure

NOTICE **The crankshaft must be locked at TDC for removal and installation of crankshaft, balancer shaft and camshaft.**

NOTE: When the crankshaft is locked, the piston of cylinder 3 is at ignition TDC.

Remove:

- Intake manifold (refer to *INTAKE MANIFOLD* subsection)
- Spark plugs
- Cylinder head cover (refer to *CYLINDER HEAD* subsection
- Crankshaft access plug screw.

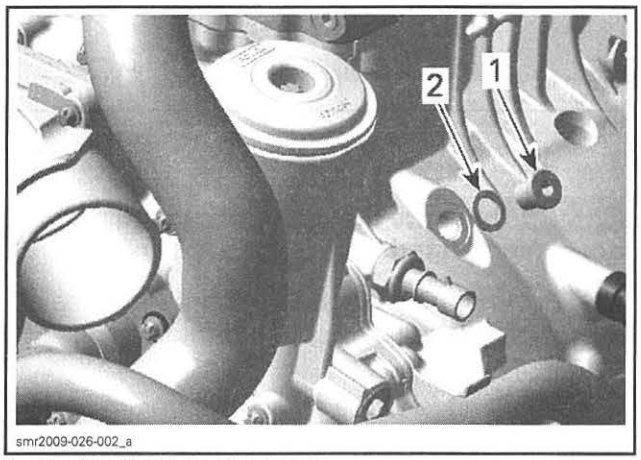

1. *Crankshaft access plug screw*
2. *Gasket ring*

Turn engine counterclockwise.

Bring piston of cylinder 3 to ignition TDC, using a dial gauge or another similarly suitable tool.

NOTICE **Do not scratch or damage piston and cylinder surface.**

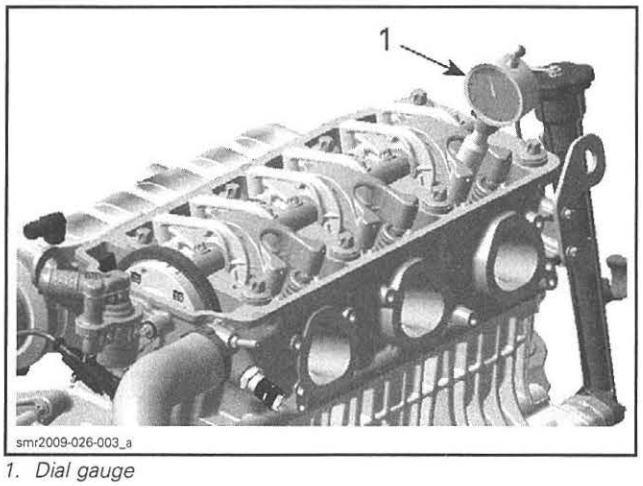

1. *Dial gauge*

NOTE: When the piston of cylinder 3 is at ignition TDC, the position lines on oil separator cover must be lined up as shown in the following illustration.

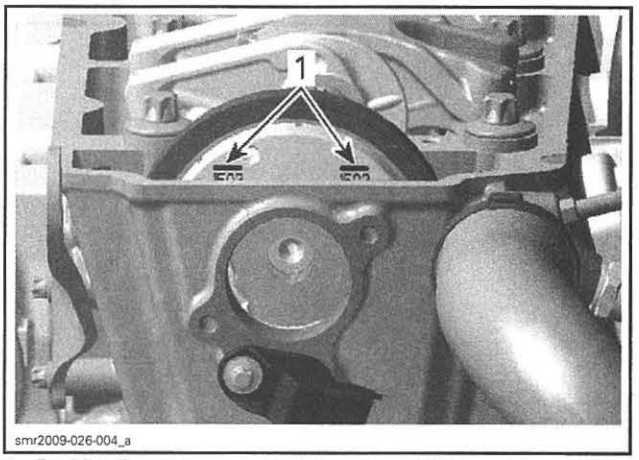

1. *Position lines*

Use a small screwdriver to check if the groove in the crankshaft is aligned with the hole.

In this position, lock the crankshaft.

REQUIRED TOOL
CRANKSHAFT LOCKING TOOL (P/N 529 035 821)

Crankshaft Removal

1. Disassemble *CYLINDER BLOCK* as per procedure described in this subsection.
2. Remove connecting rod screws. Refer to *PISTONS AND CONNECTING RODS* in this subsection.
3. Remove thrust washers **no. 16**.

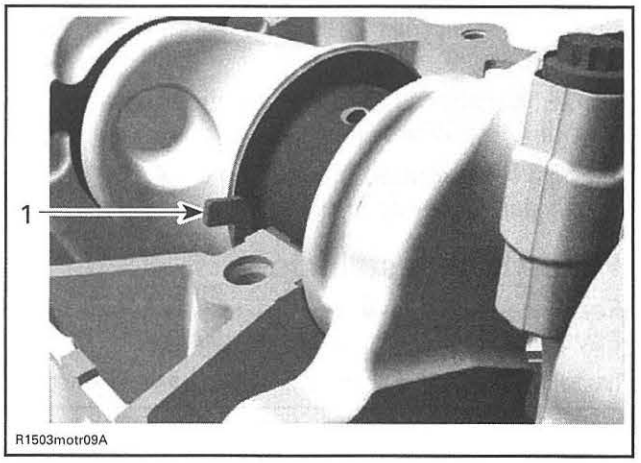

1. *Thrust washer*

4. Remove crankshaft **no. 17**.

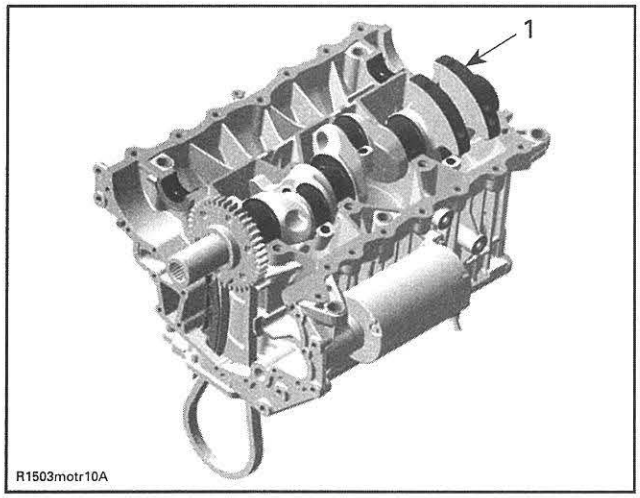

1. Crankshaft

Crankshaft Inspection

Crankshaft Gear Inspection

Replace crankshaft if the gears are worn or otherwise damaged.

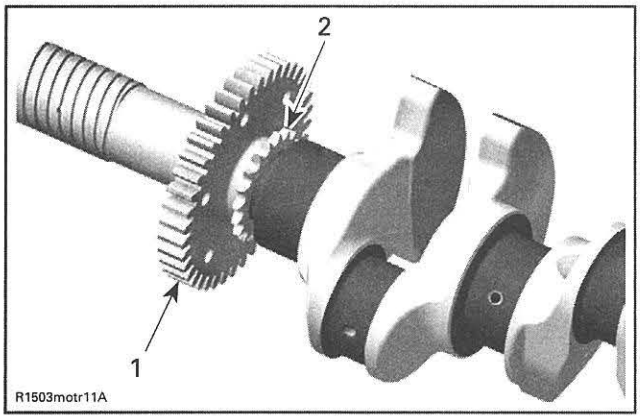

1. Balancer gear
2. Crankshaft timing gear

Crankshaft Radial Play

Measure all crankshaft journals. Compare to inside diameter of crankshaft bearings (elsewhere in this subsection).

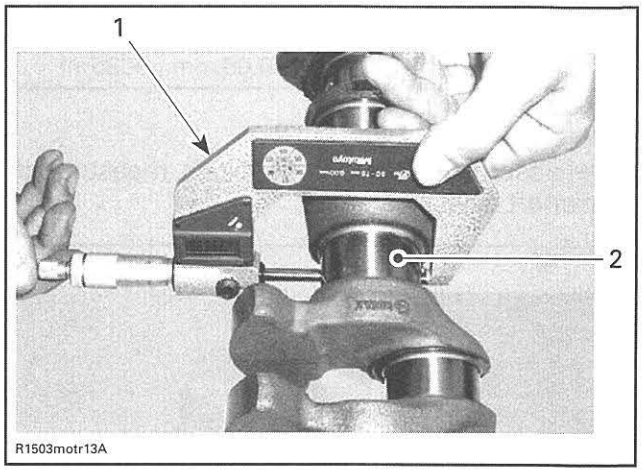

1. Micrometer
2. Crankshaft area for bearing

CRANKSHAFT JOURNAL DIAMETER	
NEW	49.991 mm - 50.01 mm (1.9681 in - 1.9689 in)
SERVICE LIMIT	49.95 mm (1.9665 in)

CRANKSHAFT JOURNAL RADIAL CLEARANCE	
SERVICE LIMIT	0.07 mm (.0028 in)

Crankshaft Pin

Measure all crankshaft pin diameters. Compare to inside diameter of connecting rod bearings (elsewhere in this subsection).

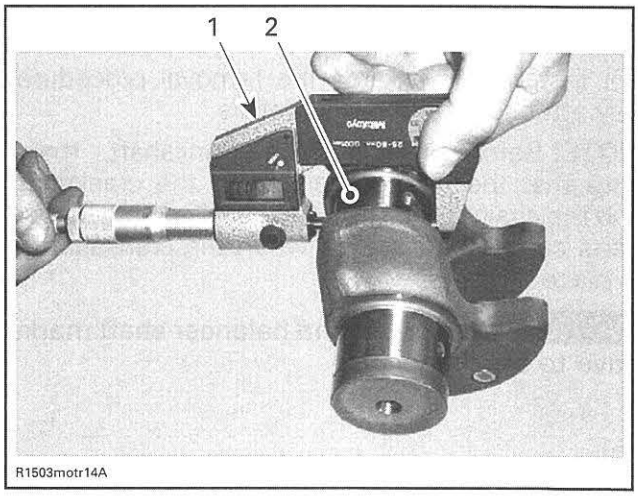

1. Micrometer
2. Crankshaft pin area for bearing

CRANKSHAFT PIN DIAMETER	
NEW	45.032 mm - 45.048 mm (1.7729 in - 1.7735 in)
SERVICE LIMIT	45.029 mm (1.7728 in)

CRANKSHAFT PIN RADIAL CLEARANCE	
SERVICE LIMIT	0.09 mm (.0035 in)

Crankshaft Axial Clearance

When assembling the cylinder-block, measure the crankshaft axial clearance.

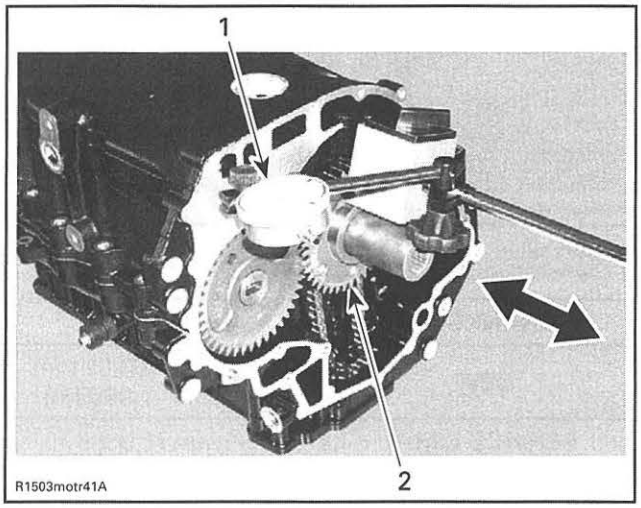

1. *Dial gauge*
2. *Crankshaft*

CRANKSHAFT AXIAL CLEARANCE	
NEW	0.08 mm - 0.22 mm (.003 in - .009 in)
SERVICE LIMIT	0.35 mm (.014 in)

Crankshaft Installation

For installation, reverse the removal procedure. Pay attention to following details.

NOTE: Before installing the crankshaft, make sure that the timing chain is on the crankshaft and the chain guide has been installed first. Those parts cannot be installed when the crankshaft is in place.

NOTICE **Crankshaft and balancer shaft marks have to be aligned.**

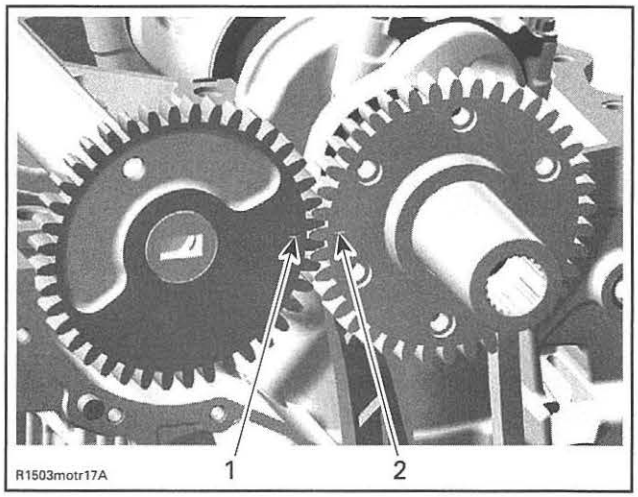

1. *Mark on balancer shaft*
2. *Mark on crankshaft*

For correct installation of the connecting rods, refer to *PISTONS AND CONNECTING RODS* in this subsection.

NOTICE **It is absolutely necessary to follow this procedure. Otherwise severe engine damage can occur.**

Insert thrust washers **no. 16** as soon as crankshaft is in place as per following illustration.

NOTICE **Never forget thrust washers on center of crankshaft to control axial adjustment.**

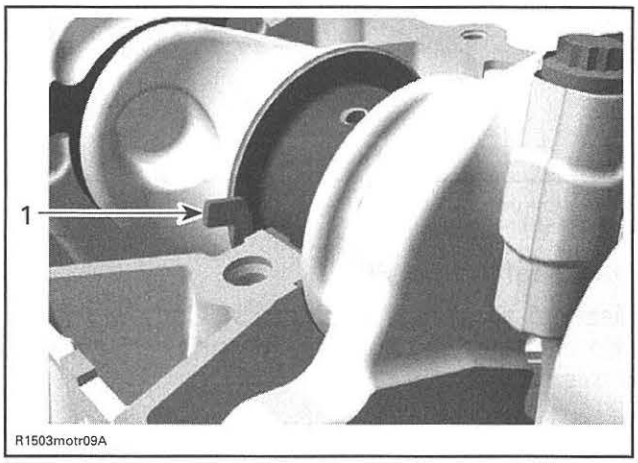

THRUST WASHER INSERT DIRECTION
1. *Thrust washer*

NOTICE **Thrust washers have to be flush with the cylinder block sealing surface.**

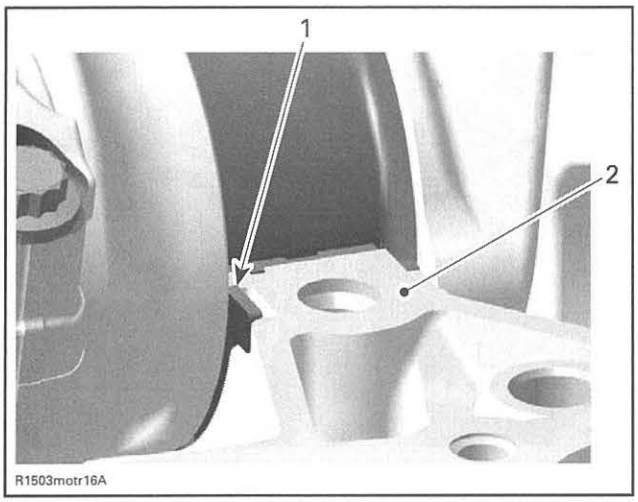

1. Thrust washer
2. Sealing surface

Install cylinder block lower half. Refer to *CYLINDER BLOCK* in this subsection.

Position crankshaft at TDC before installing the camshaft and the rocker arms (refer to *CYLINDER HEAD* subsection).

REQUIRED TOOL	
CRANKSHAFT LOCKING TOOL (P/N 529 035 821)	

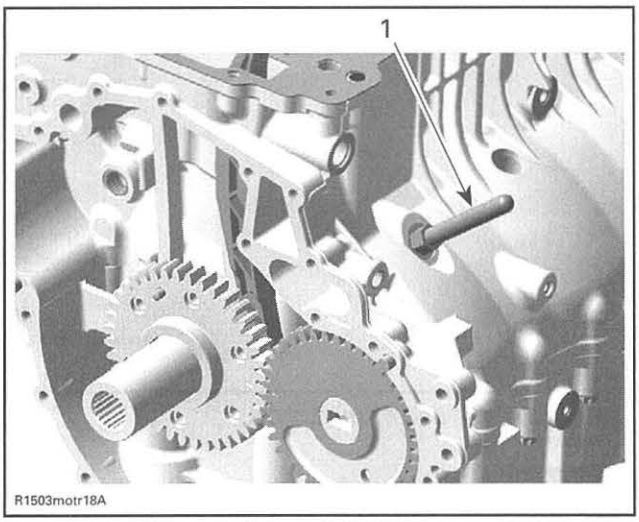

1. Crankshaft locking tool

BALANCER SHAFT

Balancer Shaft Removal

1. Disassemble *CYLINDER BLOCK* as per procedure described in this subsection.
2. Remove thrust washers **no. 18**.

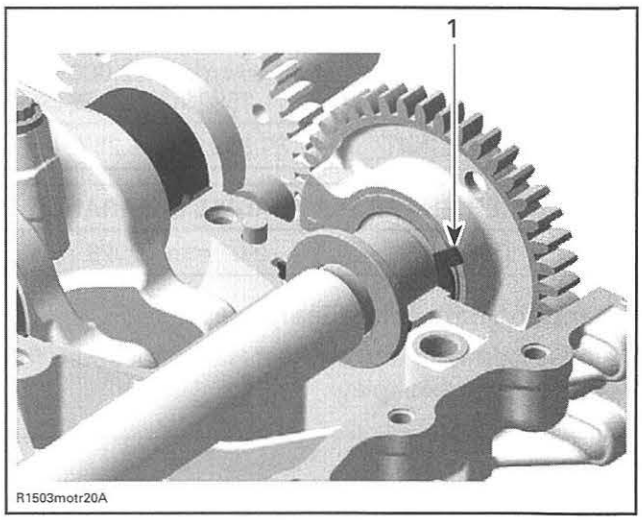

1. Thrust washer

3. Remove balancer shaft.

Balancer Shaft Inspection

Check balancer shaft and replace if damaged.

If the gear on the balancer shaft is damaged, replace balancer shaft.

Check gear on the crankshaft at the same time and replace crankshaft if necessary (refer to *CRANKSHAFT* above).

Balancer Shaft Bearing Seat Play

Measure all balancer shaft bearing seats. Compare to inside diameter of balancer shaft bearings (see *CYLINDER BLOCK INSPECTION* in this subsection).

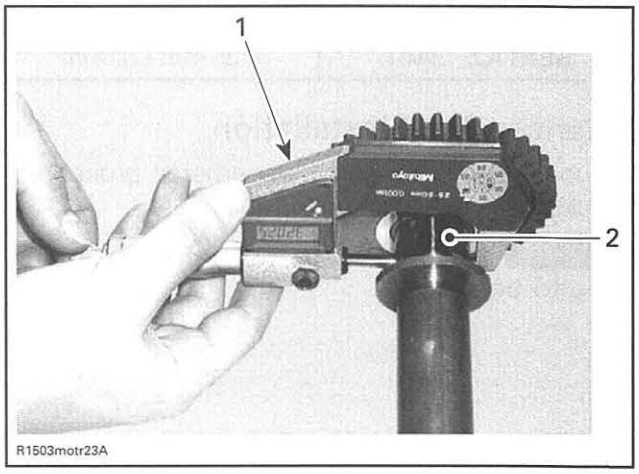

1. Micrometer
2. Balancer shaft area for bearing

BALANCER SHAFT SEAT DIAMETER	
NEW	31.984 mm - 32.000 mm (1.2592 in - 1.2598 in)
SERVICE LIMIT	31.950 mm (1.2579 in)

BALANCER SHAFT SEAT RADIAL CLEARANCE	
SERVICE LIMIT	0.07 mm (.0028 in)

Balancer Shaft Axial Clearance

When assembling the cylinder-block, measure the balance shaft axial play.

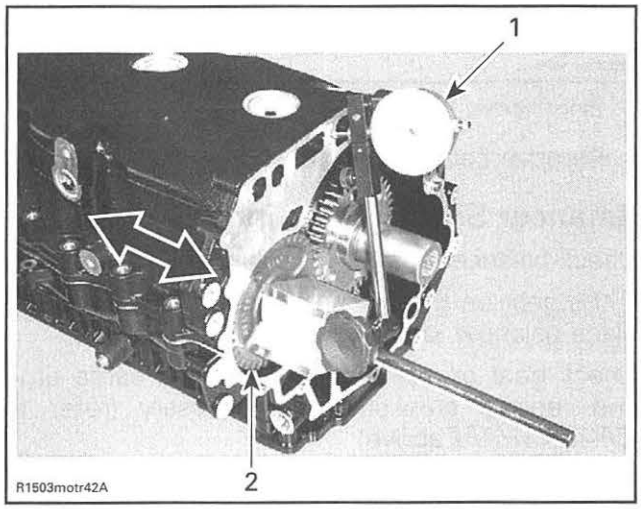

1. Dial gauge
2. Balancer shaft

BALANCER SHAFT AXIAL CLEARANCE	
NEW	0.02 mm - 0.25 mm (.001 in - .01 in)
SERVICE LIMIT	0.35 mm (.014 in)

Balancer Shaft Installation

For installation, reverse the removal procedure. Pay attention to following details.

NOTICE Balancer shaft and crankshaft marks have to be aligned.

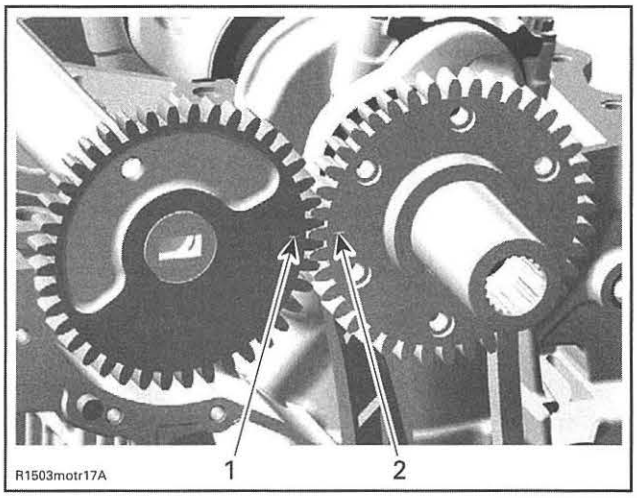

1. Mark on balancer shaft
2. Mark on crankshaft

NOTICE Never forget thrust washers no. **18** on PTO side to control axial adjustment on balancer.

Insert thrust washers as soon as balancer shaft is in place as per following illustration.

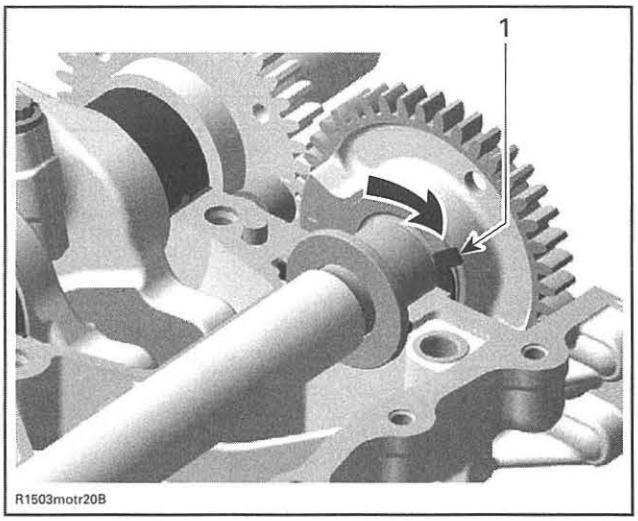

THRUST WASHER INSERT DIRECTION
1. Thrust washer

NOTICE Thrust washers have to be flush with the cylinder block sealing surface.

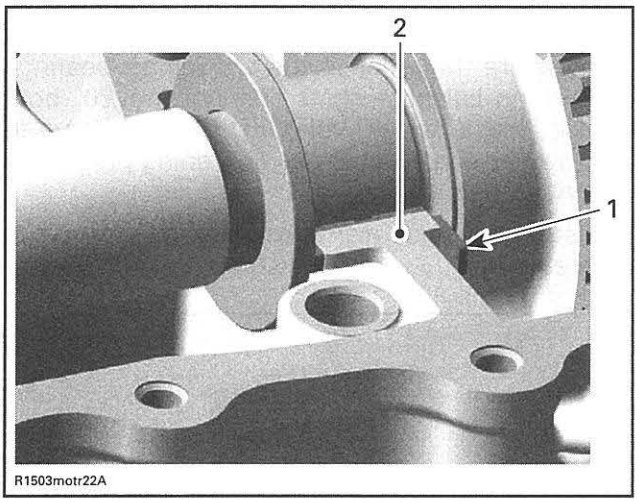

1. Thrust washer
2. Sealing surface

Install cylinder block lower half. Refer to *CYLINDER BLOCK* in this subsection.

Reassemble engine in accordance with the proper assembly procedures.

CYLINDER BLOCK

Cylinder Block Disassembly

Remove:

- Engine oil (refer to *LUBRICATION SYSTEM* subsection)
- Engine from vehicle (refer to *ENGINE REMOVAL AND INSTALLATION* subsection)
- Cylinder head (refer to *CYLINDER HEAD* subsection)
- PTO housing, starter gear and starter drive (refer to *PTO HOUSING AND MAGNETO* subsection)
- Oil suction pump (refer to *LUBRICATION SYSTEM* subsection)
- Engine mounting brackets
- Oil reservoir plug screw **no. 12** with O-ring **no. 13**
- Cylinder block screws **no. 14** and **no. 15**
- Cylinder block lower half
- Crankshaft cover with O-ring
- Balancer shaft (refer to *BALANCER SHAFT* in this subsection)
- Crankshaft (refer to *CRANKSHAFT* in this subsection)
- Piston with connecting rod (refer to *PISTONS AND CONNECTING RODS* in this subsection).

Bearings

When bearings **no. 19** and **no. 20** need to be removed from the cylinder block, mark them to identify the correct position at installation. See the following illustration for an example:

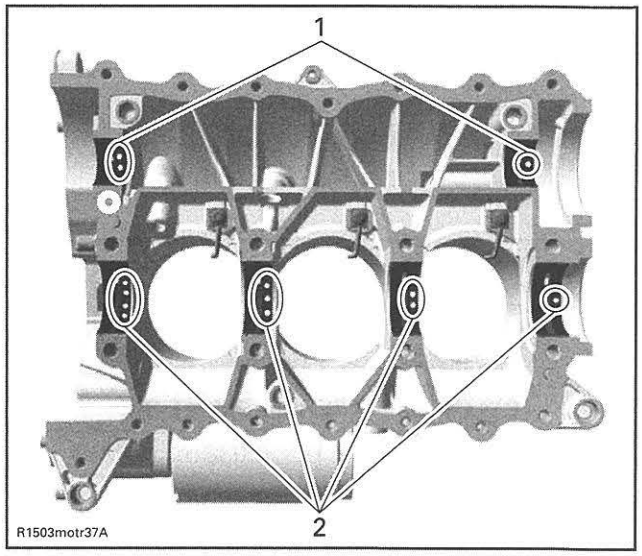

1. Marks on balancer shaft bearings
2. Marks on crankshaft bearings

Cylinder Block Inspection

Cylinder

Check cylinder for cracks, scoring and wear ridges on the top and bottom of the cylinder. If so, replace cylinder.

Cylinder Taper

Measure cylinder bore and if it is out of specifications, re-hone cylinder sleeve and replace piston with first oversize.

NOTE: It is not necessary to have all cylinders re-honed if they are not all out of specification. Mixed standard size and oversize cylinders are allowed.

Measure cylinder bore at 3 recommended positions. See the following illustration.

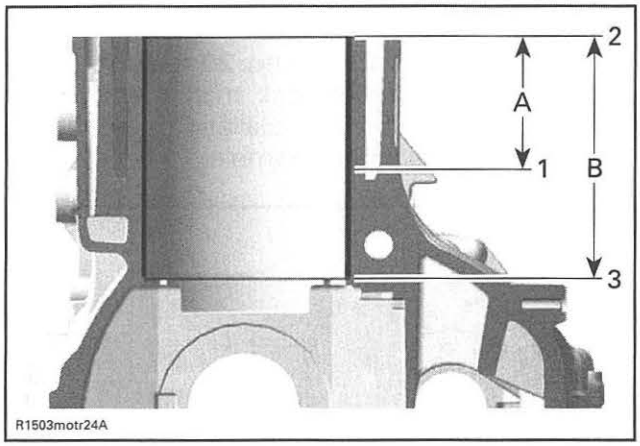

1. First measuring diameter
2. Second measuring diameter
3. Third measuring diameter
A. 60 mm (2.362 in)
B. 110 mm (4.331 in)

CYLINDER TAPER IN DIAMETER	
NEW MAXIMUM	0.038 mm (.001 in)
SERVICE LIMIT	0.100 mm (.004 in)

Distance between measurements should not exceed the service limit mentioned above.

Cylinder Out of Round

Measure cylinder diameter in piston axis direction from top of cylinder. Take an other measurement 90° from first one and compare.

NOTE: Take the same measuring points as described in *CYLINDER TAPER* above.

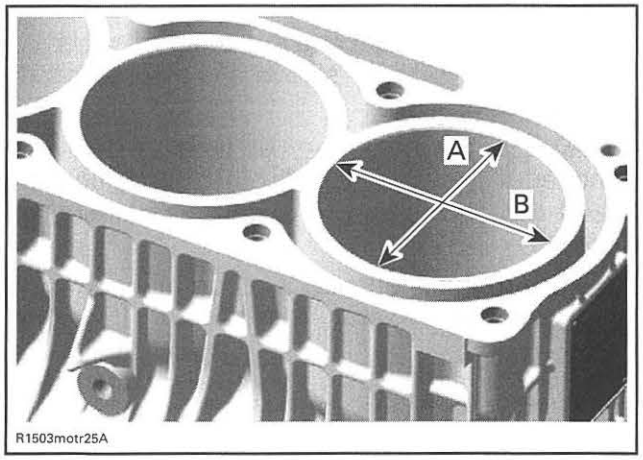

A. Perpendicular to crankshaft axis
B. Parallel to crankshaft axis

CYLINDER OUT OF ROUND	
NEW MAXIMUM	0.008 mm (.0003 in)
SERVICE LIMIT	0.015 mm (.0006 in)

Bearings

To measure the wear of the crankshaft bearings **no. 19** and balancer shaft bearings **no. 20**, both cylinder block halves with **OLD** bearings have to be screwed together as per tightening procedure described below.

Measure the inside diameter of the bearings with a bore gauge.

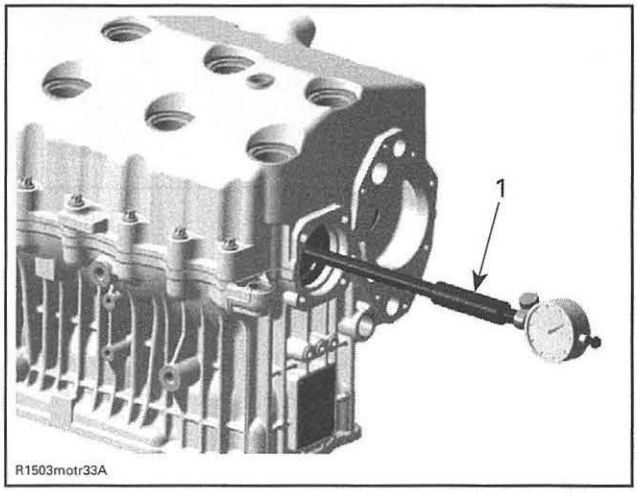

ENGINE UPSIDE DOWN
1. Bore gauge

CRANKSHAFT BEARING INSIDE DIAMETER	
SERVICE LIMIT	50.1 mm (1.9724 in)

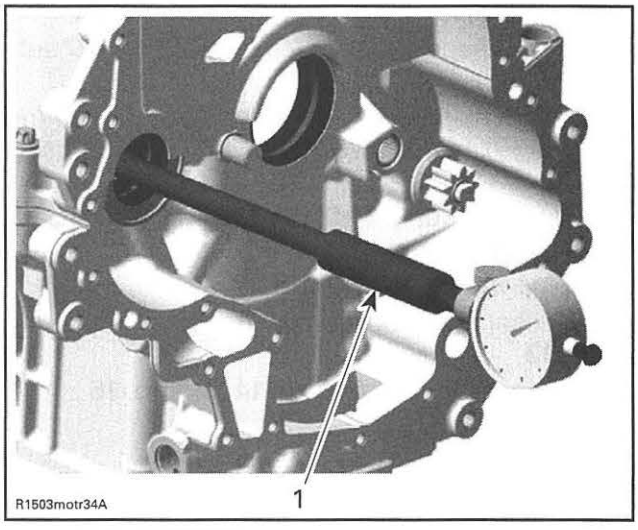

ENGINE UPSIDE DOWN
1. Bore gauge

BALANCER SHAFT BEARING INSIDE DIAMETER	
SERVICE LIMIT	32.11 mm (1.2642 in)

Replace bearings if they are out of specifications.

Cylinder Block Assembly

For assembly, reverse the disassembly procedure. Pay attention to the following details.

Torque Banjo screw to specification.

TIGHTENING TORQUE	
Banjo screw	19 N•m (168 lbf•**in**)

Use NEW bearings when diameters are out of specification.

If OLD bearings can be used again, make sure they are at the same position as they were before.

Correctly install bearings. Top crankshaft bearing halves have a bore which has to be placed in the upper cylinder block.

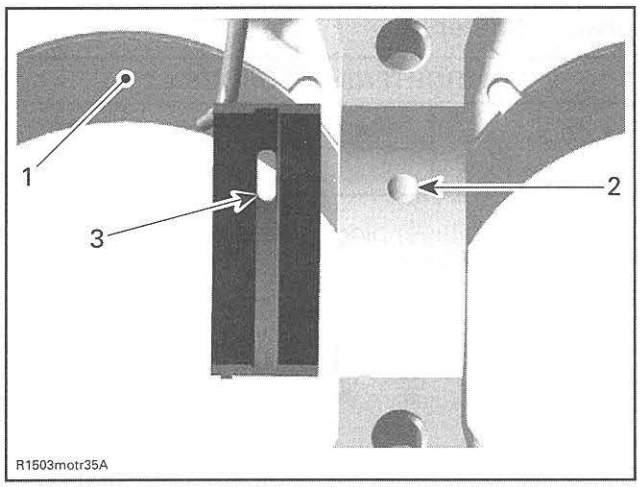

1. *Cylinder block upper half*
2. *Oil bore in cylinder block*
3. *Oil bore in bearing*

Bearings have to be flush with the cylinder block split surface and their protrusions have to fit in the notched areas in the cylinder block seat.

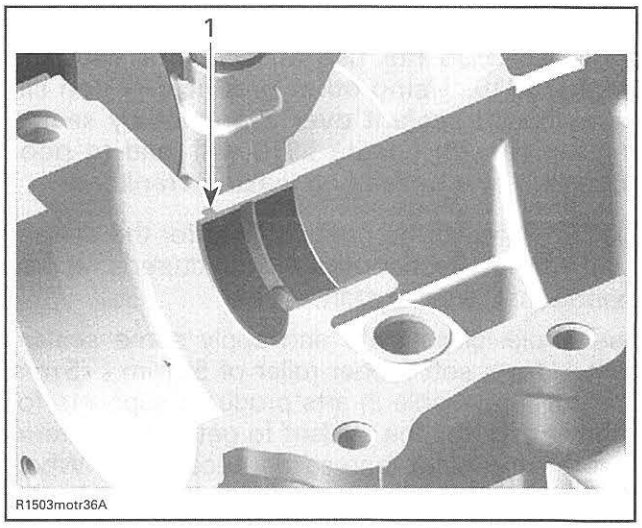

1. *Bearing protrusion in cylinder block notch*

Apply engine oil on all bearings, in the bottom area of the cylinder bore and also on the band of the piston ring compressor tool.

For proper installation of pistons, refer to *PISTONS AND CONNECTING RODS* in this subsection.

NOTE: Before installing the crankshaft, make sure that the timing chain is on the crankshaft and the chain guide has been installed first. Those parts cannot be installed after as the crankshaft is in place.

Clean oil passages and make sure they are not clogged.

Clean all metal components in a solvent.

Cylinder block mating surfaces are best cleaned using a combination of the LOCTITE CHISEL (GASKET REMOVER) (P/N 413 708 500) and a brass brush. Brush a first pass in one direction then make the final brushing perpendicularly (90°) to the first pass (cross hatch).

NOTICE **Do not wipe with rags. Use a new clean hand towel only.**

IMPORTANT: When beginning the application of the crankcase sealant, the assembly and the first torquing should be done within 10 minutes. It is suggested to have all you need on hand to save time.

NOTE: It is recommended to apply this specific sealant as described here to get an uniform application without lumps. If you do not use the roller method, you may use your finger to uniformly distribute this sealant.

Apply LOCTITE 5910 (P/N 293 800 081) on mating surfaces.

NOTICE **Do not use other products to seal crankcase. Do not use an activator with the Loctite 5910. Using other products or non silicone-based sealant over a previously sealed crankcase with Loctite 5910 will lead to poor adhesion and possibly a leaking crankcase.**

NOTE: Refer to the product label for the sealant curing time. Respect the manufacturer's recommendations prior to start engine.

Use a plexiglass plate and apply some sealant on it. Use a soft rubber roller of 50 mm - 75 mm (2 in - 3 in) available in arts products suppliers for printmaking, roll the sealant to get a thin uniform coat on the plate (spread as necessary). When ready, apply the sealant on crankcase mating surfaces.

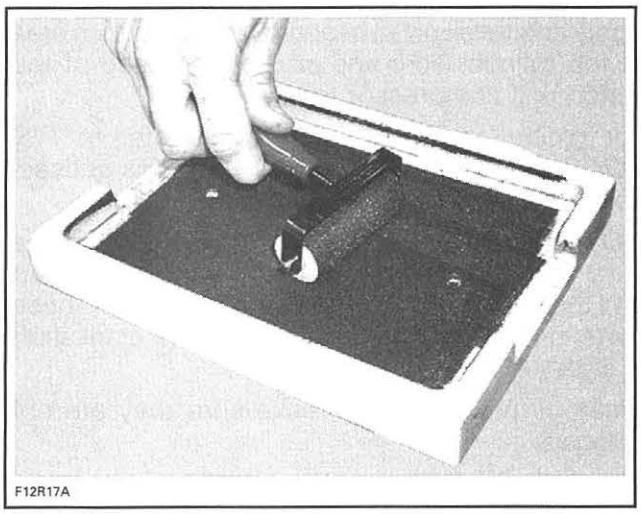
F12R17A

Do not apply in excess as it will spread out inside crankcase.

Tighten cylinder block screws as per following procedure:

Apply LOCTITE 243 (BLUE) (P/N 293 800 060) on screw threads.

Tighten M10 cylinder block screws **no. 14** using the following sequence.

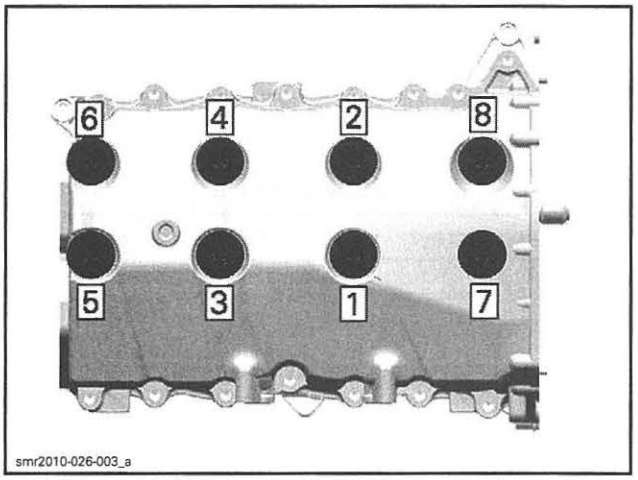

smr2010-026-003_a

NOTICE **All M10 cylinder block screws must be torque FIRST according to step 1 before performing to step 2.**

TIGHTENING TORQUE		
M10 cylinder block screws	Step 1	40 N•m (30 lbf•ft)
	Step 2	55 N•m (41 lbf•ft)

Tighten M8 cylinder block screws **no. 15** using the following sequence.

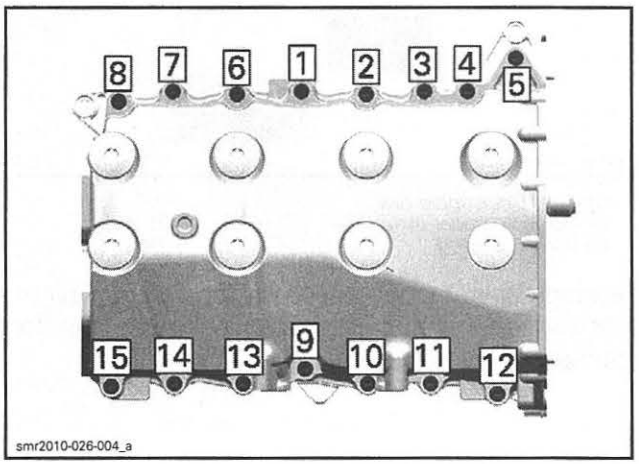

smr2010-026-004_a

TIGHTENING TORQUE	
M8 cylinder block screws	23 N•m (17 lbf•ft)

NOTE: Before continuing the assembly process, the axial clearance of balancer shaft and crankshaft has to be checked. Refer to *CRANKSHAFT* and *BALANCER SHAFT* in this subsection for the procedure.

Before mounting the engine bracket, install the crankshaft cover. Apply engine oil on O-ring and press cover in. Crankshaft cover has to be flush with cylinder block surface.

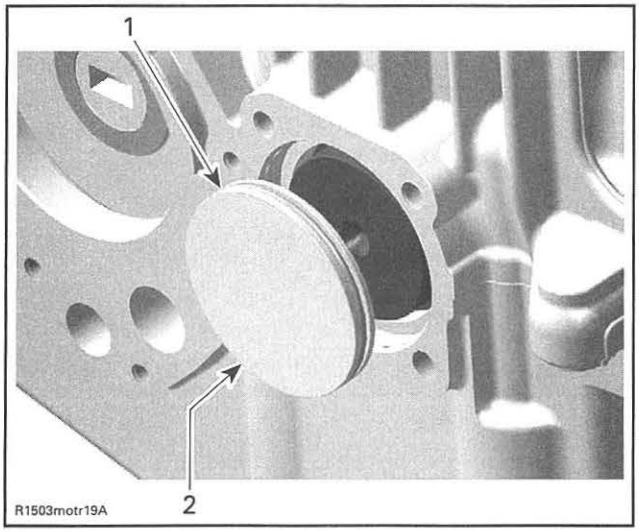

1. O-ring
2. Crankshaft cover

Position crankshaft at TDC before installing the camshaft and the rocker arms (refer to *CYLINDER HEAD* subsection).

REQUIRED TOOL
CRANKSHAFT LOCKING TOOL (P/N 529 035 821)

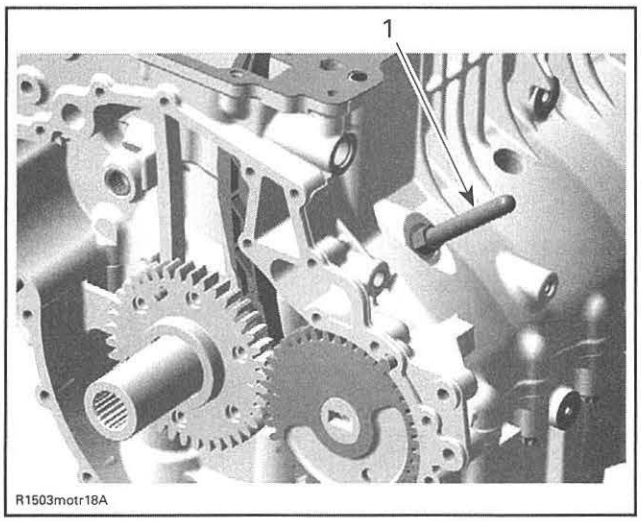

1. Crankshaft locking tool

Reassemble engine in accordance with the proper assembly procedures.

ENGINE MANAGEMENT SYSTEM

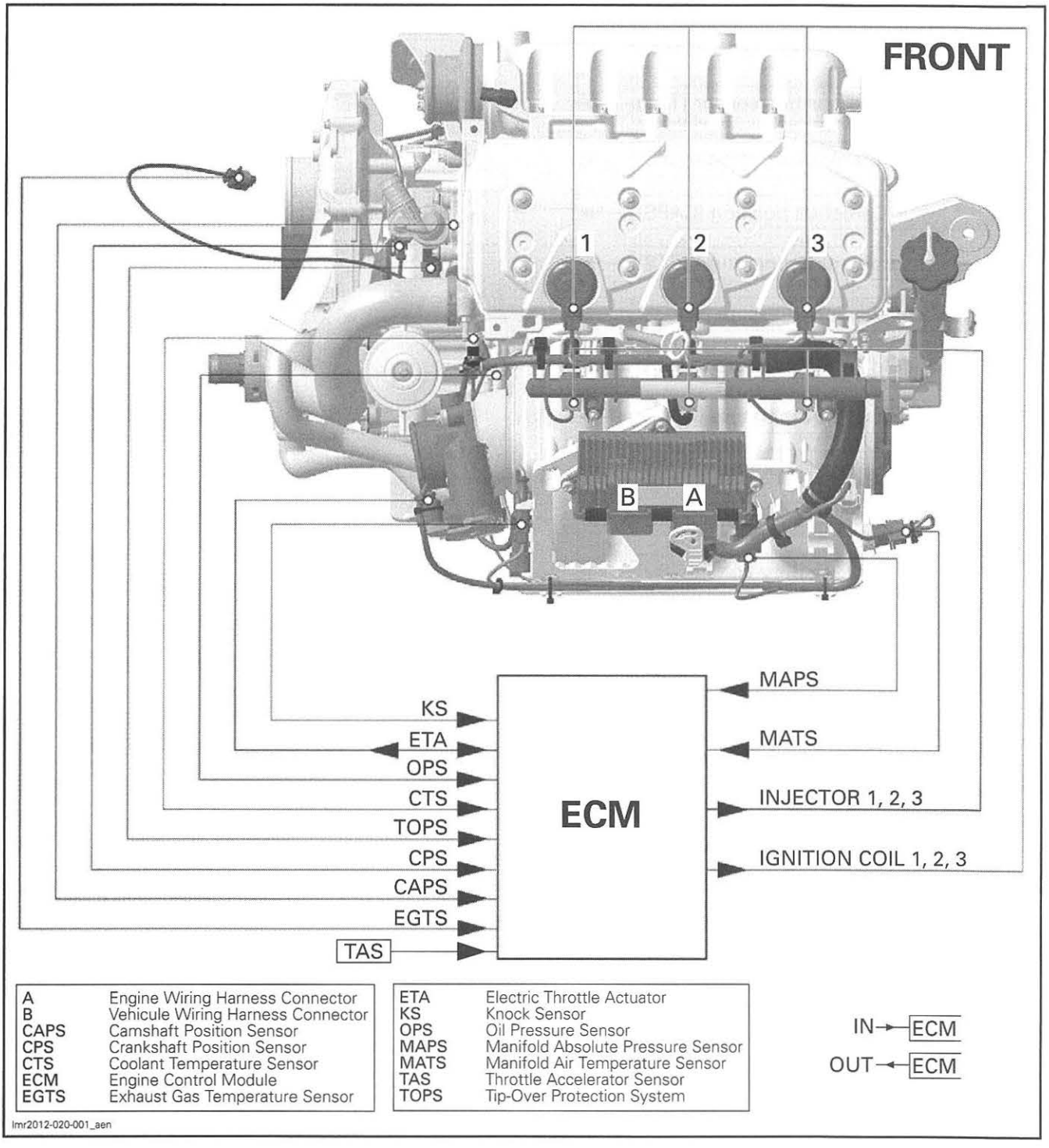

A	Engine Wiring Harness Connector
B	Vehicule Wiring Harness Connector
CAPS	Camshaft Position Sensor
CPS	Crankshaft Position Sensor
CTS	Coolant Temperature Sensor
ECM	Engine Control Module
EGTS	Exhaust Gas Temperature Sensor

ETA	Electric Throttle Actuator
KS	Knock Sensor
OPS	Oil Pressure Sensor
MAPS	Manifold Absolute Pressure Sensor
MATS	Manifold Air Temperature Sensor
TAS	Throttle Accelerator Sensor
TOPS	Tip-Over Protection System

IN → ECM
OUT ← ECM

lmr2012-020-001_aen

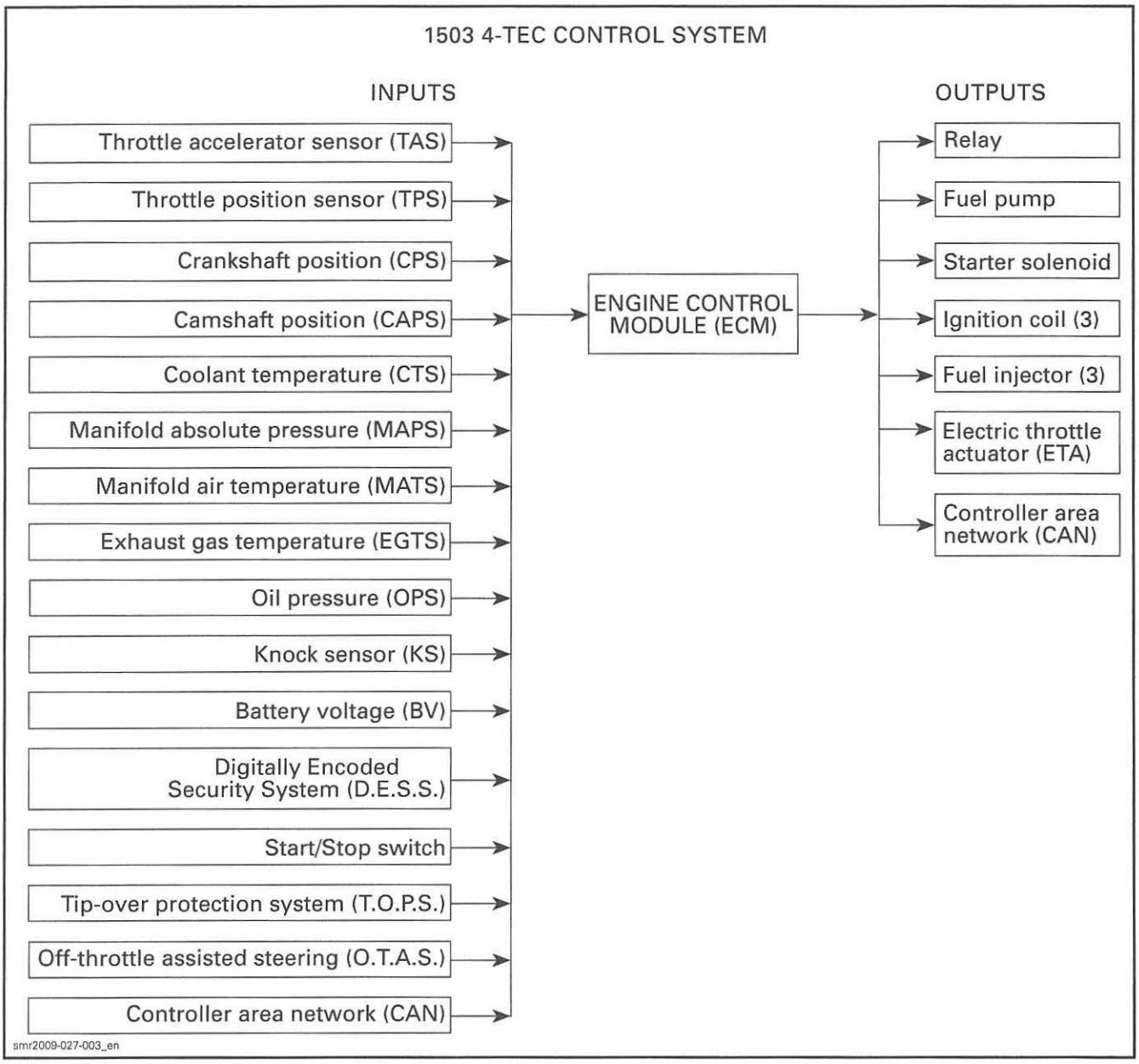
1503 4-TEC CONTROL SYSTEM
INPUTS
Throttle accelerator sensor (TAS)
Throttle position sensor (TPS)
Crankshaft position (CPS)
Camshaft position (CAPS)
Coolant temperature (CTS)
Manifold absolute pressure (MAPS)
Manifold air temperature (MATS)
Exhaust gas temperature (EGTS)
Oil pressure (OPS)
Knock sensor (KS)
Battery voltage (BV)
Digitally Encoded Security System (D.E.S.S.)
Start/Stop switch
Tip-over protection system (T.O.P.S.)
Off-throttle assisted steering (O.T.A.S.)
Controller area network (CAN)
ENGINE CONTROL MODULE (ECM)
OUTPUTS
Relay
Fuel pump
Starter solenoid
Ignition coil (3)
Fuel injector (3)
Electric throttle actuator (ETA)
Controller area network (CAN)
smr2009-027-003_en

GENERAL

SYSTEM DESCRIPTION

A highly advanced engine management system (EMS) is used to ensure a high power output with cleaner combustion.

There are 7 main systems that interact with the engine management system:

1. Electronic fuel injection
2. D.E.S.S. System
3. Ignition System
4. Starting System
5. O.T.A.S.
   (Off-Throttle Assisted Steering)
6. T.O.P.S.
   (Tip-Over Protection System)
7. iControl System

Engine Control Module (ECM)

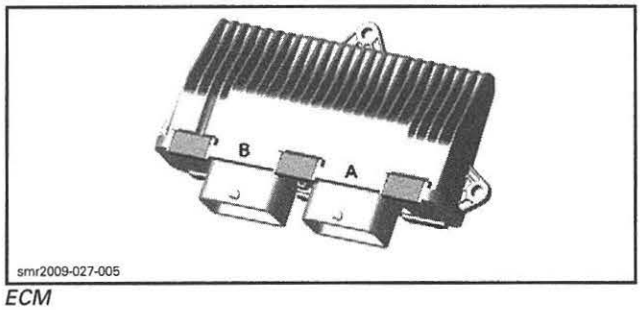

ECM

The ECM is the main component of the engine management system. It controls the electrical system and the engine management functions by processing the information obtained from various switches, controls and sensors that it compares to predetermined parameters stored in the ECM.

It also interacts with the other electronic systems through the CAN bus (information center and iControl System) for various functions that affect engine management.

The ECM is mounted on the intake manifold.

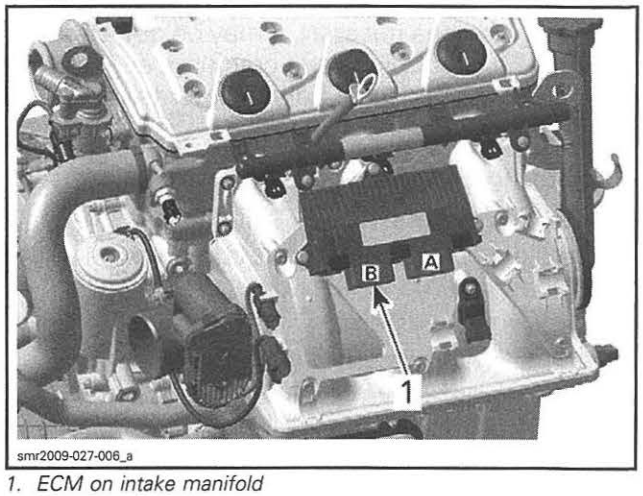

1. ECM on intake manifold

It features a permanent memory that will store fault codes, customer information and other engine information, even when the battery is removed from the vehicle.

The ECM controls the following engine management functions:

Engine RPM Limiter

The ECM limits maximum engine speed. It monitors engine RPM through the CPS and varies fuel injection, ignition and throttle plate opening as necessary.

Engine Speed Control

The ECM controls the engine idle RPM. In addition, it can vary the engine speed by commanding the electronic throttle actuator (ETA) to open or close based on throttle position and various other inputs. The ETA also allows for other functions of the iControl system.

Drowned Mode

If the engine is flooded and does not start, this special mode can be activated to prevent fuel injection and ignition while cranking in order to ventilate the engine to dry the cylinder walls.

NOTE: This mode can also be used if the engine is water-flooded.

To activate DROWNED MODE, proceed as per following steps.

1. Install the tether cord cap on the engine cut out switch.
2. While the engine is stopped, fully pull and HOLD the throttle lever.
3. Press the START/STOP button. DROWNED MODE is now on.

Releasing the throttle lever will allow the ECM to revert back to normal mode.

If the engine does not start, it may be necessary to remove the spark plugs and crank the engine with rags over the spark plug holes. Refer to *IGNITION SYSTEM* subsection.

Monitoring System

The ECM monitors:

- The electrical and electronic components of the engine system
- The iControl system
- The information center (gauge)
- Some components of the electrical system
- Signals from other electronic modules

For more information, refer to *DIAGNOSTIC AND FAULT CODES.*

Limp Home Mode

The ECM may automatically set the engine in LIMP HOME MODE using default parameters when certain major faults are detected. For more information, refer to *DIAGNOSTIC AND FAULT CODES.*

Diagnostic Mode

The ECM features a self-diagnostic mode that is initiated on system power up for certain systems and components (when pressing the START button), and when the engine is running for others. Refer to *DIAGNOSTIC AND FAULT CODES* subsection for more information.

iCONTROL SYSTEM

GENERAL

The iControl (intelligent Control) system may consist of the following systems depending on the PWC model:

- Intelligent Throttle Control (iTC)
- Intelligent Brake and Reverse (iBR)
- Intelligent Suspension (iS).

The information center (gauge) and handlebar switches are used to navigate through and select several functions, modes of operation and change certain settings and system parameters using the appropriate handlebar controls.

Each control is electronic and provides a command signal to an electronic module whose function is to assure proper operation of its system within set parameters.

For a comprehensive and complete description of the information center, refer to *INFORMATION CENTER (GAUGE)* subsection.

iTC (INTELLIGENT THROTTLE CONTROL)

The iTC is an electronic throttle control system (ETC) that includes a cable-less throttle control (TAS) located on the RH side of handlebar and an electric throttle actuator (ETA) located on the throttle body.

The iTC allows functions such as touring/sport mode, cruise control, slow speed mode, ski mode and O.T.A.S.™ as well as a more precise control of the engine power.

For a comprehensive and complete description of this system, refer to *INTELLIGENT THROTTLE CONTROL (ITC)* subsection.

iBR (INTELLIGENT BRAKE AND REVERSE)

The iBR is a brake and reverse system used to avoid obstacles, gradually slow down or stop the watercraft, or drive backwards by lowering the iBR gate that redirects the water flow at the outlet of the jet pump nozzle.

For a comprehensive and complete description of this system, refer to *IBR AND VTS* subsection.

iS (INTELLIGENT SUSPENSION)

The intelligent suspension is an electronically controlled hydro/mechanical system consisting of a hydraulic pump, an actuator, suspension arms, springs and one shock absorber. They are installed in the hull and connected to the moving deck. The suspension system is used to isolate the riders from the rough water.

For a comprehensive and complete description of this system, refer to *SUSPENSION (iS)* subsection.

CONTROLLER AREA NETWORK (CAN)

GENERAL

SYSTEM DESCRIPTION

The CAN (Controller Area Network) protocol is an ISO standard for serial data communication.

The CAN bus is the nervous system of the iControl system and the engine management system (EMS). It links the electronic modules (ECUs) together so that they communicate to interact as required.

Two wires connect each component and they are in constant communication with each other at a rate of about every 10 or 100 milliseconds depending on the component. CAN lines consist of a pair of twisted wires (WHITE/BLACK and WHITE/BEIGE).

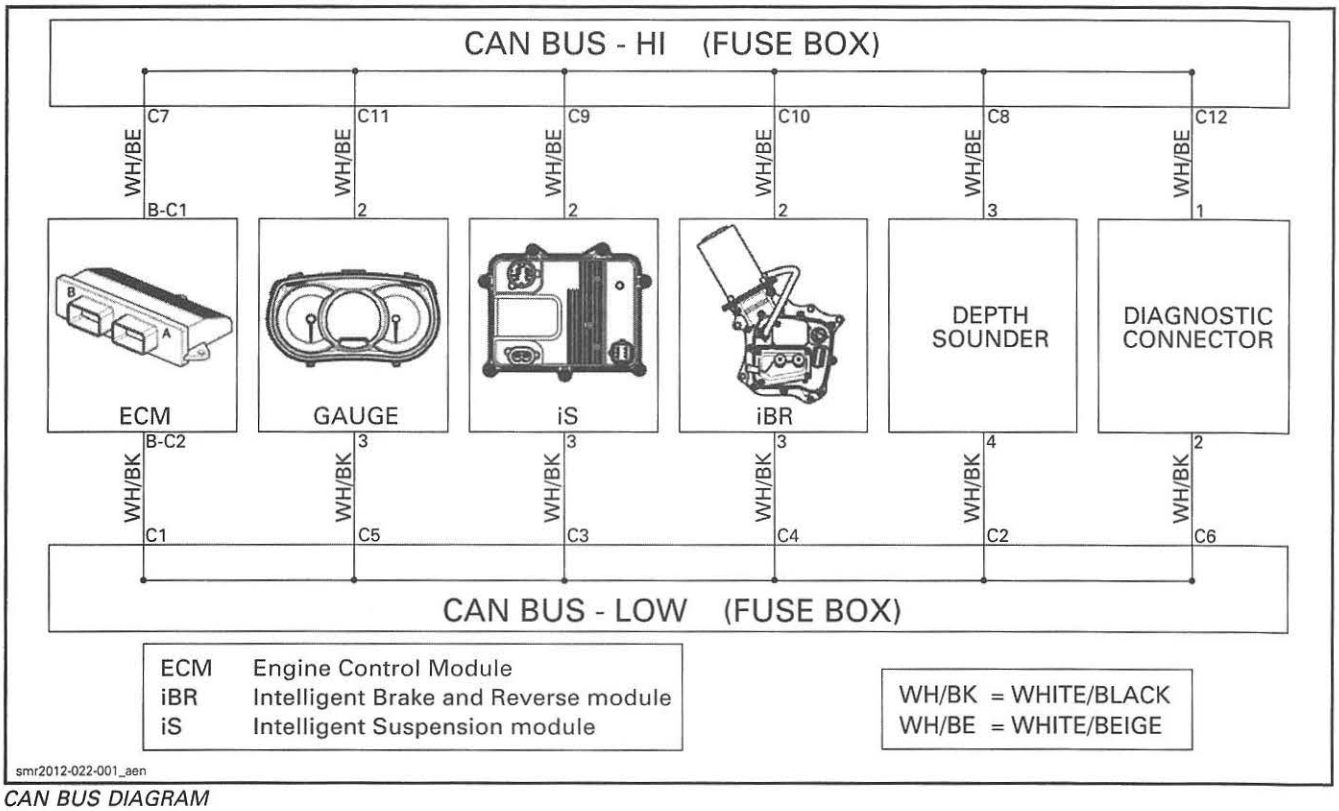

CAN BUS DIAGRAM

TROUBLESHOOTING

DIAGNOSTIC TIPS

Check the fault codes using B.U.D.S. as a first troubleshooting step. Refer to *DIAGNOSTIC AND FAULT CODES* subsection.

Make sure the modules are powered before testing CAN.

CAN Communication Problems

The following chart gives some symptoms and behaviors relative to the CAN component in cause. The list is not exhaustive, only the most significant items are given to help in troubleshooting.

CAN FAULTY WIRES (no communication)	VEHICLE BEHAVIOR OR OBSERVATION IN INFORMATION CENTER	OBSERVATION IN B.U.D.S.
Diagnostic connector not secured in its holder (holder contains a 120Ω resistor)	CAN intermittent problems. **NOTE:** Occurs more frequently on watercraft equipped with 2 electronic modules.	Nothing
Water in holder of diagnostic connector (particularly with salt water)	Communication problems and strange behavior of information center. Inoperative electronic systems in watercraft.	Nothing
Short circuit in CAN wires	Engine is set to limp home mode. iBR gate will not move. "Locked" in neutral. iBR light is ON. Check engine light is ON.	B.U.D.S. will not be able to communicate with any electronic module. "No vehicle detected" message will be displayed in B.U.D.S.
Information center (cluster)	Check engine light is ON. iBR light is ON. Some functions not displayed such as: Engine hours, iS, VTS and RPM.	3 modules instead of 4 will be active. "Cluster" tab and its data will not be available in B.U.D.S. ECM, iBR and iS will report a cluster CAN problem.
ECM (Engine Control Module)	Engine is set to limp home mode. Check engine light is ON. iBR light is ON. iBR gate "locked" in neutral. Some functions not displayed such as: Engine hours and RPM.	3 modules instead of 4 will be active. ECM tab and its data will not be available in B.U.D.S. iBR and iS will report an ECM CAN problem.
iBR (intelligent Brake and Reverse)	Engine is set to limp home mode. iBR gate will not move. "Locked" in neutral. iBR light is ON. Check engine light is ON. Some functions not displayed such as: Lake water temperature, no VTS, no F, N and R indication.	3 modules instead of 4 will be active. iBR tab and its data will not be available in B.U.D.S. ECM and iS will report an iBR CAN problem.

CAN FAULTY WIRES (no communication)	VEHICLE BEHAVIOR OR OBSERVATION IN INFORMATION CENTER	OBSERVATION IN B.U.D.S.
iS (intelligent Suspension)	iS handlebar controls have no effect. No DOCK mode. Suspension will remain to its last position before the CAN problem. iS position is not displayed.	3 modules instead of 4 will be active. iS tab and its data will not be available in B.U.D.S.
Depth sounder	The menu Depth Sounder Indicator will not be visible. The Depth menu will not be available.	Nothing will be observable.
Diagnostic connector	Nothing will be observable.	B.U.D.S. will not be able to communicate with any electronic module. "No vehicle detected" message will be displayed in B.U.D.S.

NOTE: If the gauge cannot communicate with an optional module (iS module or depth sounder) during the initial power up, the gauge will interpret this as if the vehicle is not equipped with it. No further test of the system occurs and no indication or fault message will be visible. If communication is interrupted after the gauge has already detected them, then the gauge will indicate that there is a communication fault.

COMMUNICATION TOOLS AND B.U.D.S.

SERVICE TOOLS

Description	Part Number	Page
MPI-2 DIAGNOSTIC CABLE	710 000 851	203
MPI-2 INTERFACE CARD	529 036 018	203–204

SERVICE TOOLS – OTHER SUPPLIER

Description	Part Number	Page
MALE-FEMALE EXTENSION SERIAL CABLE	DB9	204

GENERAL

Refer to *PROCEDURES* for instructions on the communication tools.

If communication problems occur, refer to *TROUBLESHOOTING* in this subsection.

TROUBLESHOOTING

DIAGNOSTIC TIPS

IMPORTANT: Make sure all connections are made and vehicle is powered up **before starting B.U.D.S.** to allow proper communication between the vehicle and B.U.D.S. software.

MPI-2 Connection Troubleshooting

MPI-2 Status Lights

The MPI-2 includes 2 status lights that indicate the connection condition: USB and CAN. **Both lights must be GREEN** for the MPI-2 to function properly. Otherwise, refer to the following charts.

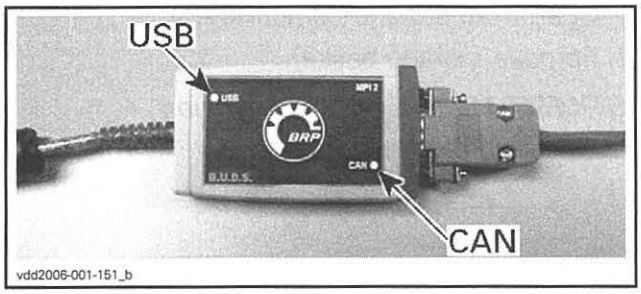

Prerequisite for USB communication:

- PC Computer turned on
- MPI-2 connected to PC computer.

USB LIGHT	
STATUS	WHAT TO DO
Light is OFF	– Check USB connection between MPI-2 and PC computer. – Check USB operation on PC computer (hardware or Windows drivers).
Light is GREEN	– Connections are GOOD. Communication can take place on USB side.

Prerequisite for CAN communication:

- MPI-2 connected to diagnostic connector on vehicle.
- ECM turned on (press the START button).
- Tether cord installed on the vehicle engine cut-off switch.
- B.U.D.S. started and logged on.

CAN LIGHT	
STATUS	WHAT TO DO
Light is OFF	Check connection between MPI-2 and diagnostic connector on vehicle.
Light is RED	Check CAN wires/connectors on vehicle.
Light is GREEN	Connections are GOOD. Communication can take place on CAN side.

Communication Problems when Using B.U.D.S.

Missing Module

If one or more ECU is not communicating with the MPI, refer to *DIAGNOSTIC AND FAULT CODES* subsection.

No Vehicle Detected

If an "X" is shown in the status bar and the protocol tool is blinking between Kw2000 500K and Kw2000, it means that no ECU is communicating with the MPI.

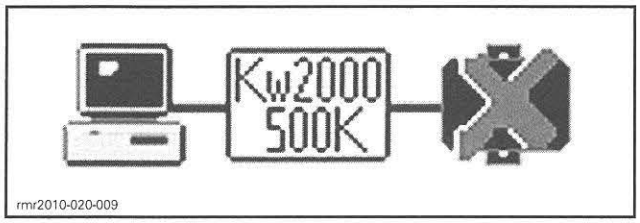

rmr2010-020-009

1. Check connections between the PC computer and the vehicle.
2. Ensure the electrical system is powered up.

NOTE: The **tether cord** must be installed.

3. Ensure both USB and CAN lights on the MPI-2 are GREEN. Refer to *MPI-2 CONNECTION TROUBLESHOOTING* subsection.

If B.U.D.S. does not automatically exit the following message box, click the **Try active detection mode** button. This will manually establish the communication with the ECUs.

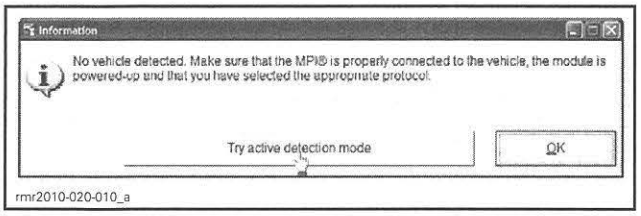

rmr2010-020-010_a

Message Box: "Some of the Information Normally Displayed..."

If the following message box is displayed in B.U.D.S.:

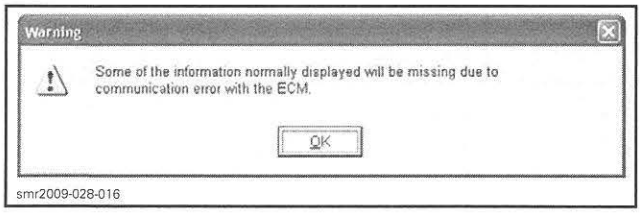

smr2009-028-016

1. Click on the **OK** button in the box.
2. Ensure the tether cord is properly installed.
3. **Briefly** press the vehicle START button to activate the ECM. **Do not hold START button to avoid engine starting.**
4. Click on the **Read Data** button in B.U.D.S.

Message Box: "Engine must be Stopped..."

If the following message box is displayed in B.U.D.S.:

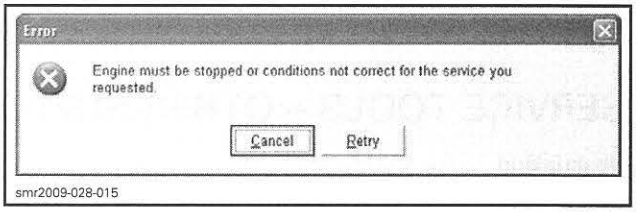

smr2009-028-015

1. Click on the **Cancel** button in B.U.D.S.
2. Ensure the tether cord is properly installed.
3. **Briefly** press the vehicle START button to activate the ECM. **Do not hold START button to avoid engine starting.**
4. Continue with the procedure undertaken prior to the appearance of the message box.

PROCEDURES

MPI-2

The MPI-2 (Multi-Purpose Interface-2) in conjunction with the MPI-2 diagnostic cable is used with B.U.D.S. software to communicate with the ECM (engine control module) and other modules.

MPI-2 Power

The MPI-2 interface card uses the power from the PC computer USB port.

Connecting the PC to the Vehicle

GTS, GTI, GTR, RXP-X Series and Wake

1. Open front storage compartment.
2. Remove storage basket.

GTX/RXT Models with Suspension

3. Open the boarding platform.

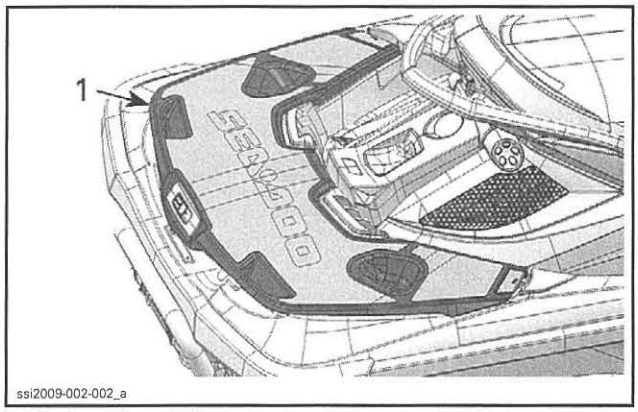

1. Re-boarding platform

4. Remove the RH storage bin.

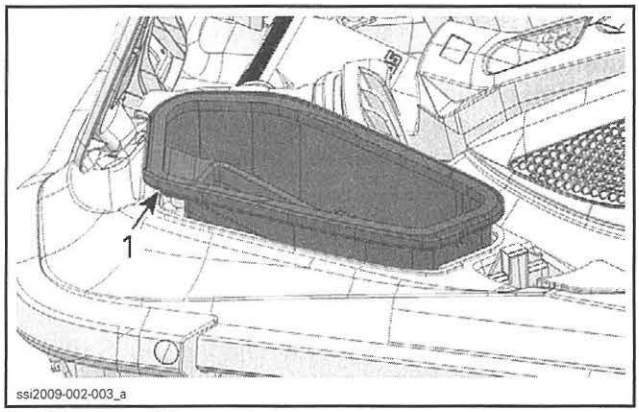

1. RH storage bin

GTX/RXT Models Without Suspension

5. Remove the RH access panel on the boarding platform.

All Models

6. Disconnect the 6-pin diagnostic connector from its holder (protective cap).

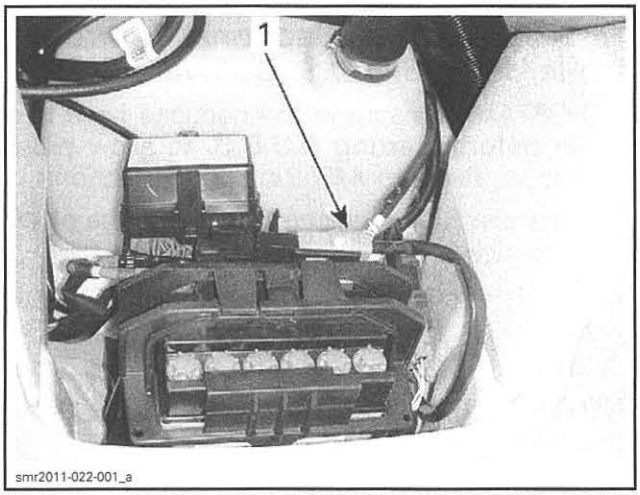

TYPICAL — ACCESS FROM FRONT STORAGE COMPARTMENT
1. Diagnostic connector

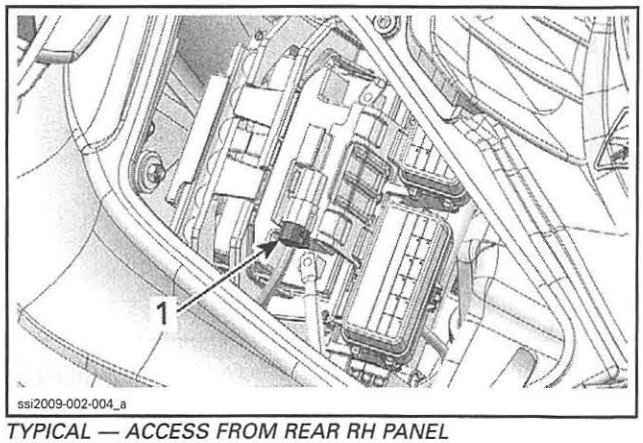

TYPICAL — ACCESS FROM REAR RH PANEL
1. Diagnostic connector

7. Connect one end of the MPI-2 DIAGNOSTIC CABLE (P/N 710 000 851) to vehicle connector.

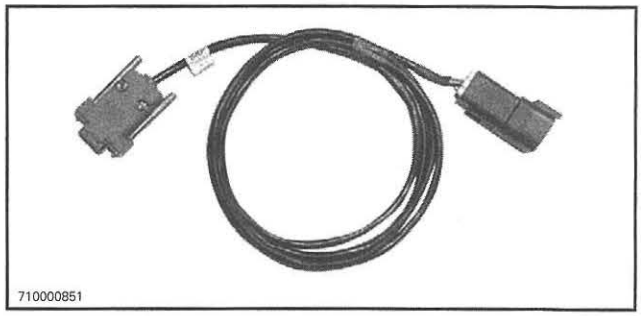

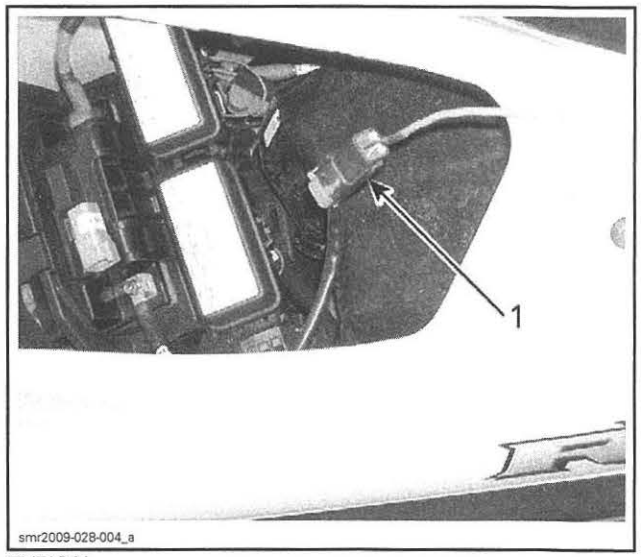

TYPICAL
1. Diagnostic cable connected to vehicle

8. Connect the other end of diagnostic cable to the MPI-2 INTERFACE CARD (P/N 529 036 018).

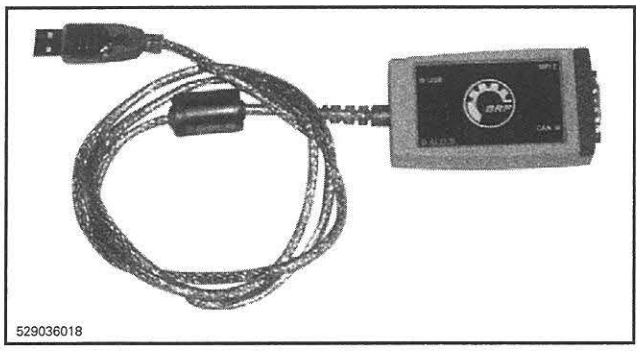

NOTE: An optional MALE-FEMALE EXTENSION SERIAL CABLE (P/N DB9) available at electronic retail outlets can be used between diagnostic cable and MPI-2 interface. Do not exceed 7.6 m (25 ft).

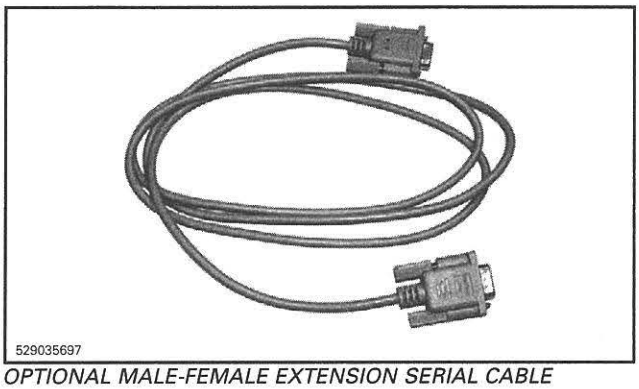

OPTIONAL MALE-FEMALE EXTENSION SERIAL CABLE

9. Connect the MPI-2 INTERFACE CARD (P/N 529 036 018) to the USB port of a PC (personal computer).

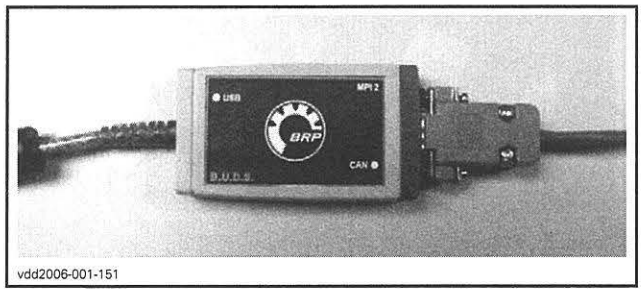

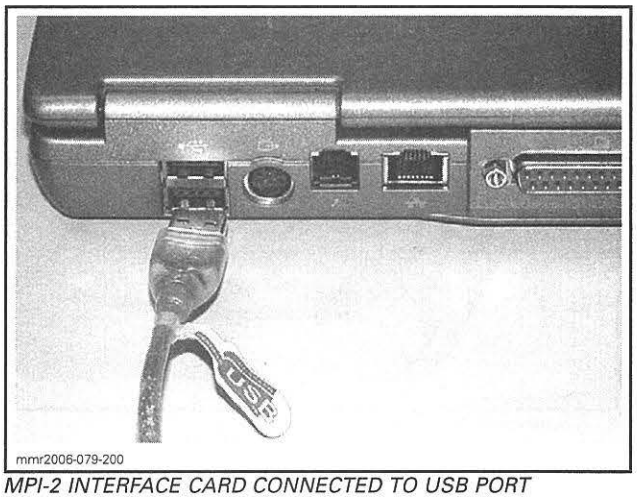

MPI-2 INTERFACE CARD CONNECTED TO USB PORT

⚠ CAUTION If the computer you are using is connected to a power outlet, there is a potential risk of electric shock when working in contact with water. Be careful not to touch water while working with the computer.

10. Use B.U.D.S. software as described further in *B.U.D.S. SOFTWARE*.

B.U.D.S. SOFTWARE

B.U.D.S. (BRP Utility and Diagnostic Software) is designed to allow programming key(s) to the vehicle, allow electrical and electronic component monitoring, activation of certain components for diagnostic purposes, and to carry out settings changes.

For more information pertaining to the use of the B.U.D.S. software, use its help which contains detailed information on its functions.

Always use the latest applicable B.U.D.S. version available on BOSSWeb.

How to Read the Electronic Control Units Using B.U.D.S. Software

IMPORTANT: Ensure all connections have been made **before starting B.U.D.S.** to allow proper operation. Refer to *MPI-2* in this subsection.

1. Press the START button to wake up the electrical system.
2. Install the tether cord on the engine cut-off switch.
3. Start B.U.D.S. and logon.

NOTE: B.U.D.S. will automatically choose the appropriate MPI 2 protocol.

4. Ensure the appropriate number of modules is shown in the status bar.

MODEL	NUMBER OF MODULES	MODULES
GTS, GTI, GTR, RXP-X and WAKE	2	ECM and cluster
GTX/RXT models with iS	4	ECM, cluster, iBR and iS
GTX/RXT models without suspension	3	ECM, cluster and iBR

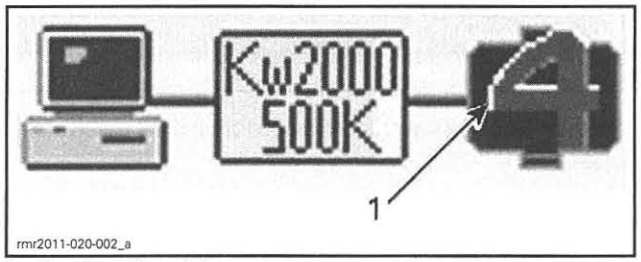

1. Number of modules

5. Read electronic modules by clicking the **Read Data** button.

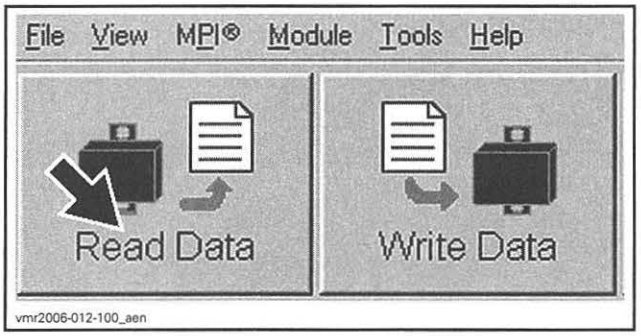

B.U.D.S. is now ready to use.

Electronic Modules ECU Update

NOTICE **Failure to strictly follow a procedure to update a module may permanently damage the module.**

Whenever B.U.D.S. is started, check for an update icon in the B.U.D.S. status bar.

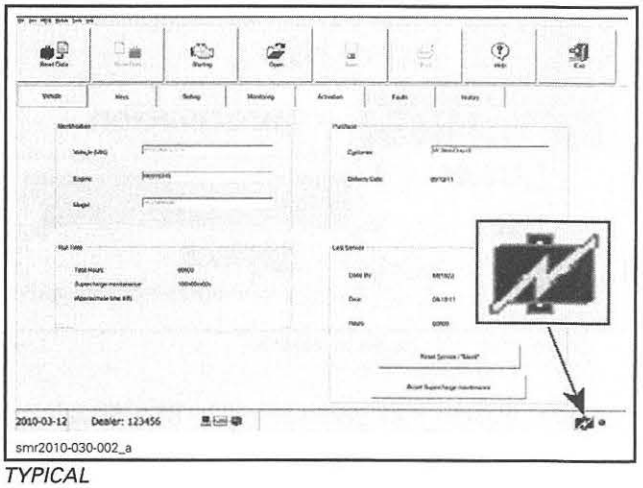

TYPICAL

If the icon is visible, it indicates that a file is available in B.U.D.S. to update at least one of the electronic modules.

NOTE: If an update file is available on BOSSWeb but the B.U.D.S. software being used is not up to date, the update icon will not appear. Refer to the service bulletins to see if there is an update available.

Use the **Module** submenu and check all modules one at a time to see which module(s) can be updated.

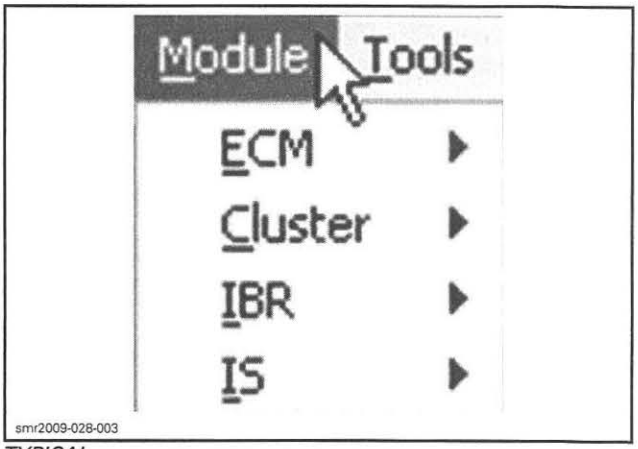

TYPICAL

1. If the **Update** option is **greyed out**, no update file is available for this module.
2. If the **Update** option is **black**, an update file is available for this module.

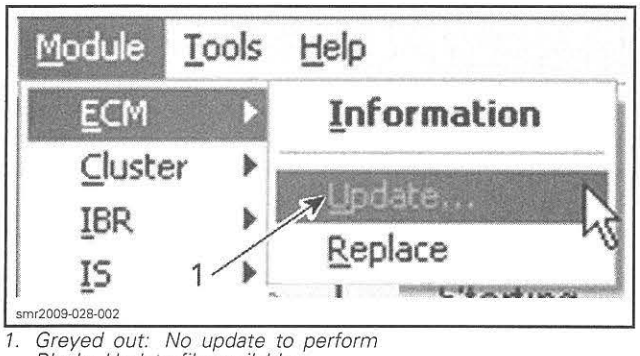

1. Greyed out: No update to perform
Black: Update file available

Before applying an update, log in BOSSWeb and look in **Service** for the **Unit history** to find out if any information or publication related to the vehicle is available. If so, carefully follow the given instructions.

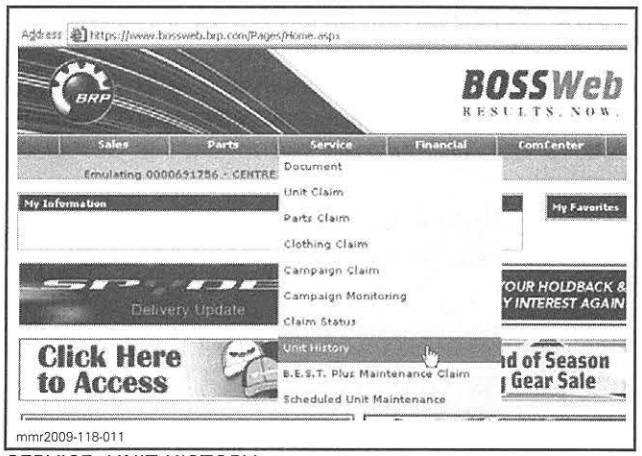

SERVICE, UNIT HISTORY

NOTE: When selecting the update menu in B.U.D.S., a dialog box will appear and the update file description may give some clue to finding the vehicle-related information in BOSSWeb.

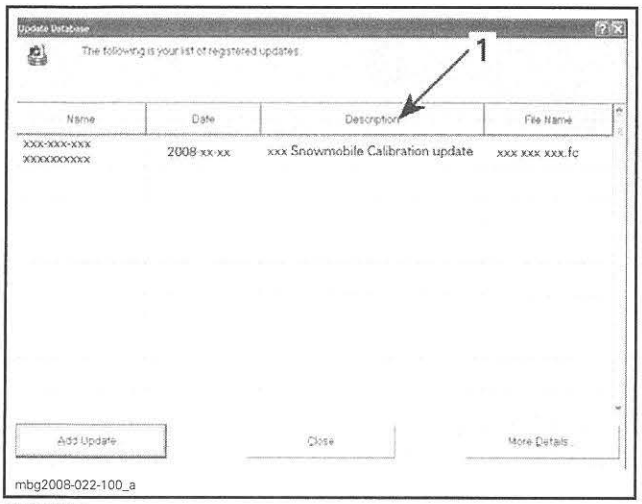

TYPICAL
1. File description

Writing Changes in an ECU

1. When finished, save changes to the related electronic module by clicking the **Write Data** button.

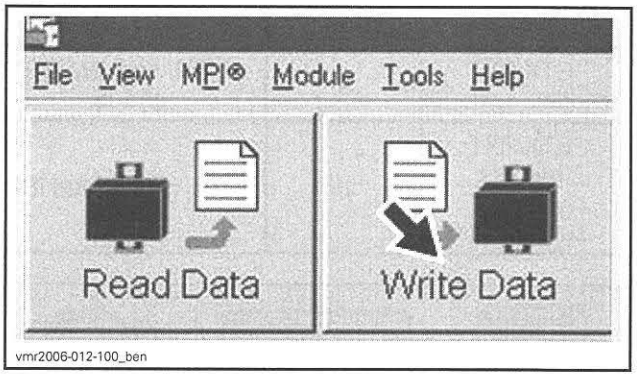

NOTE: A message box will confirm a successful operation.

2. Remove tether cord from the engine cut-off switch.

Disconnect MPI connections and secure the vehicle diagnostic connector in its holder.

NOTE: Holder has a 120 ohm internal resistor. Diagnositic connector must be secured in holder for proper operation.

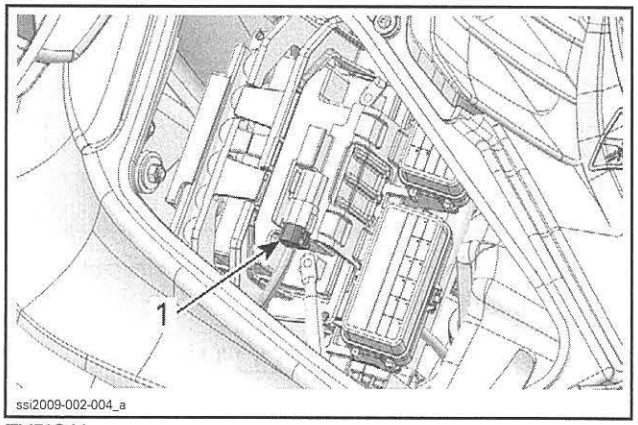

TYPICAL
1. Diagnostic connector secured to holder

NOTICE **Failure to secure the diagnostic connector in its protective cap may result in corrosion or other damage to the terminals.**

3. Reinstall al removed parts, refer to appropriate subsections.

DIAGNOSTIC AND FAULT CODES

GENERAL

MONITORING SYSTEM

This system monitors the electronic components of the EMS (engine management system), iBR, information center, iS and other components of the electrical system to detect if they are faulty or defective. The monitoring system becomes active when the START button is pressed.

NOTE: Some components need the engine to be running to be monitored (fuel injectors for example).

The following components or functions are monitored.

EMS MONITORING
Battery voltage
EMS sensors (TAS, TPS, CPS, CAPS, MAPS, MATS, CTS, OPS, EGTS, TOPS, knock sensor). Throttle actuator, ignition coils and fuel injectors
ECM
Engine RPM
CAN
D.E.S.S. system
START switch and starter solenoid
Fuel pump
O.T.A.S.
Information center
iBR module

iBR MONITORING
iBR module and motor
BRLS
Engine RPM
Vehicle speed
iBR gate position
CAN
Lake temperature sensor
Information center
ECM

INFORMATION CENTER MONITORING
Information center
VTS, Sport and ECO switch
MODE and SET switch
Cruise switch
CAN
GPS
Fuel level sensor
Depth sounder
ECM
iBR module
iS module

iS MONITORING
iS module and motor
Vehicle speed
Suspension position
CAN
TOPS
Information center
iBR module

When a malfunction is currently detected, the related electronic module:

- Sets an active fault code.
- Adapts the proper protection strategy according to the failure.
- Sends out warning signals to the information center/beeper codes to inform the rider of a particular condition.

When a minor or transient fault occurs, the fault message and beeper will cease automatically if the condition that caused the fault does not exist anymore.

If a minor fault is active, the engine will operate without a noticeable loss of performance.

Releasing the throttle and letting the engine return to idle speed may allow normal operation to resume. If this does not work, try the following:

- Remove tether cord from the engine cut-off switch.
- Wait 3 minutes to allow the ECM to shut down.
- Start engine.
- Check if the fault code is still active.

The electronic system will react differently depending on the fault type. If a severe failure occurs, the engine may not be allowed to be started. In other cases, the engine may operate in limp home mode (reduced speed) or not be affected at all.

These strategies are used to protect the engine system from damage and to maintain safe operation of the vehicle.

Limp Home Mode

When a major component of the EMS or the iBR is not operating properly, limp home mode will be set. Engine speed will be limited and therefore vehicle speed.

This mode allows the rider to return home which would otherwise not be possible without this advanced system.

When this mode is active, LIMP HOME MODE will be displayed in the information center.

Major Fault and Vehicle Reaction

The following EMS conditions will trigger a limp home mode.

ENGINE PROBLEM	MAX ALLOWED RPM
High engine temperature (from 110°C (230°F))	3000
High exhaust temperature (from 110°C (230°F))	3000
Low oil pressure (below 180 - 220 kPa (26 - 32 PSI))	2500

The following conditions will trigger limp home mode.

iBR PROBLEM	SYSTEM BEHAVIOR
Any active fault code related to the iBR that prevents its proper operation	iBR gate will be moved and locked in forward position (if possible)
	Engine will be set in limp home mode (reduced speed)

The following conditions will stop the suspension.

iS PROBLEM	SYSTEM BEHAVIOR
Any active fault code related to the iS that prevents its proper operation	Suspension operation will be disabled
	It will remain at the position it was at when the fault code was set

Indicator Lights and Message Display Information

The fault indicators and messages displayed in the information center will inform you of a particular condition or if an anomaly occurs.

GTI/GTR/GTS Series and Wake

FAULT INDICATOR (ON)	MESSAGE DISPLAY	DESCRIPTION
	HIGH TEMPERATURE	Engine or exhaust system overheating
	CHECK ENGINE or LIMP HOME MODE	Check engine (minor fault req. maint.) or iBR system fault or LIMP HOME MODE (major eng. fault)
	LOW or HIGH BATTERY VOLTAGE	Low/high battery voltage
	LOW OIL PRESSURE	Low engine oil pressure detected
	iBR MODULE ERROR	iBR system fault

RXT/GTX/RXP Series and Wake Pro

PILOT LAMPS (ON)	MESSAGE DISPLAY	DESCRIPTION
	LOW or HIGH BATTERY VOLTAGE	Low/high battery voltage
	HIGH TEMPERATURE	Engine or exhaust system overheating
	CHECK ENGINE or LIMP HOME MODE	Check engine (minor fault req. maint.) or LIMP HOME MODE (major eng. fault)
	LOW OIL PRESSURE	Low oil pressure
	–	iBR system fault
	–	OTAS system fault

FAULT MESSAGES	
RIGHT KEYPAD ERROR	Gauge control button malfunction
LOW OIL PRESSURE	Engine low oil pressure detected
HIGH EXHAUST TEMPERATURE	High exhaust temperature detected
HIGH TEMPERATURE	High engine temperature detected
CHECK ENGINE	Engine management system malfunction or maintenance required
HIGH BATTERY VOLTAGE	High battery voltage detected
LOW BATTERY VOLTAGE	Low battery voltage detected
LIMP HOME MODE	Major fault detected, engine power limited
FUEL SENSOR DEFECTIVE	Fuel level sensor fault
WATER TEMP SENSOR DEFECTIVE	Problem in iBR, not sending water temperature info
CALIBRATION CHECKSUM ERROR	Information center programming corrupted
MAINTENANCE REQUIRED	Watercraft maintenance required
DEPTH SOUNDER MODULE COMMUNICATION PROBLEM	Error message if depth sounder is disconnected while riding
IS MODULE COMMUNICATION PROBLEM	Error message if communication with the suspension module is lost while riding
iBR MODULE ERROR	Error message if communication with the iBR module is lost while riding
FUNCTION CANNOT BE ACTIVATED	Message when a function is not or cannot be properly activated
WRONG KEY	Key not programmed for this watercraft
O.T.A.S. MAINTENANCE REQUIRED	Maintenance on O.T.A.S. required

Beeper Signals

When one of the below conditions occurs, the monitoring system emits the following beep signals.

BEEPER CODES	DESCRIPTION
A 1 second beep every 5 second interval (while installing D.E.S.S. key on engine cut-off switch if ECM is on)	**Bad D.E.S.S. system connection.** Reinstall tether cord correctly over engine cut-off switch.
	Wrong D.E.S.S. key. Use a tether cord with a D.E.S.S. key that has been programmed for the watercraft.
	Defective D.E.S.S. key. Use another programmed D.E.S.S. key.
	Dried salt water in D.E.S.S. key. Clean D.E.S.S. key with fresh water to remove salt water.
	Defective engine cut-off switch. Check. Refer to *IGNITION SYSTEM* subsection.
	Improper operation of ECM or defective wiring harness. Check. Refer to *ELECTRONIC FUEL INJECTION (EFI)* subsection.
A 2 second beep every 5 minute interval	**Low fuel level.** Refill fuel tank. If problem persists, check sensor and circuit. Refer to *FUEL TANK AND FUEL PUMP* subsection.
	Fuel tank level sensor or circuit malfunction. Check sensor and circuit. Refer to *FUEL TANK AND FUEL PUMP* subsection.
Continuously beeps	**High engine coolant temperature.** Refer to *COOLING SYSTEM* subsection.
	High exhaust temperature. Refer to *ELECTRONIC FUEL INJECTION (EFI)* subsection.
	Low oil pressure. Turn off engine as soon as possible. Check oil level and refill. Refer to *LUBRICATION* subsection.

FAULT CODES

A fault code is an indication that a malfunction is detected by the monitoring system of the vehicle.

Fault Code Categories

A fault code consists of an alphanumeric designator followed by a hexadecimal number of 3 digits. The alphanumeric designator defines the category of the fault code while the hexadecimal number refers to a unique fault.

FAULT CODE CATEGORIES		
ALPHANUMERIC DESIGNATOR	MODULE/ SYSTEM	EXAMPLE OF FAULT CODE
From B0 to B3	Body (include information center and switch faults)	B2211
From C0 to C3	iBR and iS	C007B
From P0 to P3	Power train and related system faults (includes ECM)	P062F
From U0 to U3	Communication between modules and sensors	U0179

RELATED MODULE AND FAULTS	
MODULE	FAULT CODE CATEGORY
ECM (engine control module)	Stores mainly "P" codes and some "U" codes
iBR (intelligent brake and reverse)	Stores mainly "C" codes and a few "U" codes
iS (intelligent suspension)	Stores mainly "C" codes and a few "U" codes
Cluster	Stores mainly "C" codes and a few "U" codes

Reading Fault Codes Using the Information Center

NOTE: A fault code must have the "Active" state to be displayed in the multifunction gauge.

1. Press the MODE button repeatedly until the FAULT CODE function is visible in the multifunction display.
2. Press the SET button or the UP or DOWN arrow button to enter the function and display the first fault code.
3. Press the UP or DOWN arrow button repeatedly to display each subsequent code.

NOTE: When the last fault code has been displayed and the button is pressed again, the system loops back to the first fault code displayed, and all fault codes can again be displayed. If there was one active fault code when entering FAULT CODE mode, and it becomes occurred (no longer active), a NO ACTIVE FAULT CODE message will scroll in the display.

4. To exit the FAULT CODE display function, the MODE or SET button must be pressed once. There is no time out on this function.



FAULT CODE DISPLAY FUNCTION

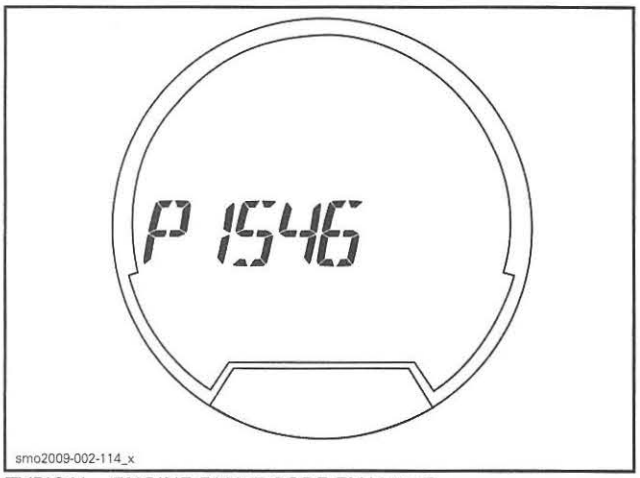

TYPICAL - ENGINE FAULT CODE EXAMPLE

Reading Fault Codes Using B.U.D.S. Software

NOTE: All fault code types can be read with B.U.D.S.

1. Connect vehicle to the latest applicable B.U.D.S. software. Refer to *COMMUNICATION TOOLS AND B.U.D.S.* subsection.

2. Click on the **Read Data** button.
3. Click on the **Faults** tab.

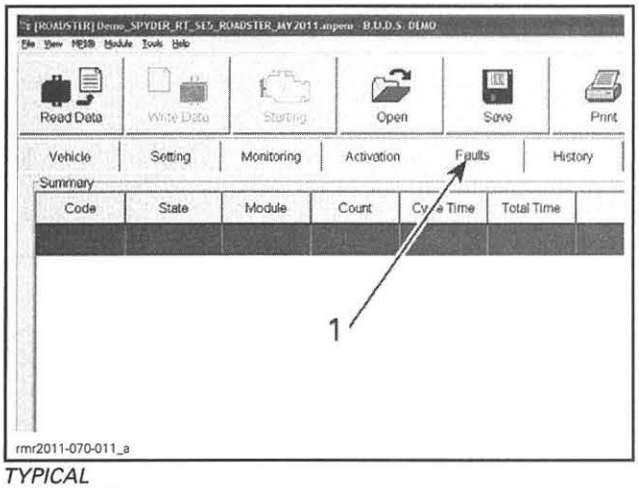

TYPICAL
1. Fault tab

4. Click on the drop-down list on the LH lower corner.
5. Choose the fault state to display.

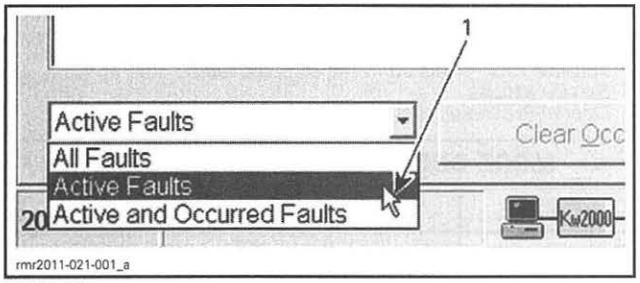

TYPICAL
1. Drop down list

FAULT STATE	INFORMATION
All faults	Display all possible faults regardless of state
Active faults	Display only faults matching this state. Empty area if there is no active fault
Active and occurred faults	Display only faults that have either state. Empty area if there is neither active nor occurred fault

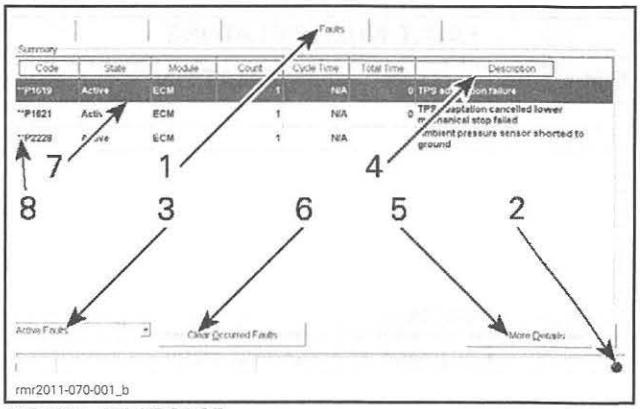

TYPICAL FAULT PAGE
1. Fault tab
2. Fault indicator light
3. Fault code state drop box
4. Fault nomenclature
5. More details button
6. Clear occurred faults button
7. Selected fault
8. More information indicator

FAULT PAGE DESCRIPTION	
ITEM	INFORMATION
Fault tab	Click tab to display the fault page
Fault indicator light	When flashing, it indicates there is active fault(s)
Fault code state drop box	Click drop box to select the type of faults to display
Fault nomenclature	Display specific information and statistics related to the fault (see fault nomenclature table)
More details button	To display possible causes and service actions related to the selected fault
Clear occurred faults button	To clear all occurred faults in related ECU(s)
Selected fault	When a fault is selected, additional information pertaining to that fault will be displayed when clicking the "More details" button. To select a fault, click on the fault with the mouse or use the cursor up or down to scroll to the desired fault

FAULT NOMENCLATURE	
COLUMN	INFORMATION
Code	Fault code number. When 2 stars (**) precedes the code, detailed conditions when the fault occurred, can be displayed by clicking the "More details" button
State	Display the fault state (active, occurred, inactive)
Module	Displays the module that reports the fault code. This is the module that detects or has received a message of an anomaly and reports it. List of modules: Multifunction gauge ECM (engine control module) iBR (intelligent brake and reverse) iS (intelligent suspension)
Count	Number of times this fault occurred within the driving cycle Value: From 0 to 255
Cycle time	Not to be used Value: From 0 to 255 minutes
Total time	Not to be used Value: From 0 to 64 255 minutes
Description	Provides a short description of the fault

When reading a fault code in B.U.D.S., pay particular attention to which module reports a fault. It is indicated in the **Module** column.

The **Description** column gives a short description of the fault.

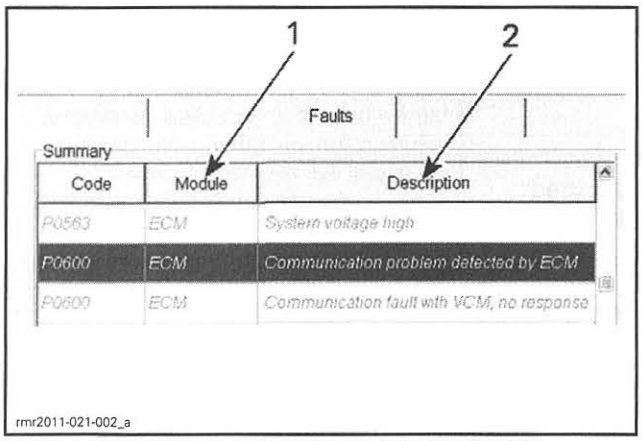

SOME COLUMNS REMOVED FOR CLARITY PURPOSE
1. *Module that reports a fault*
2. *Fault description*

Click on the **More Details** button, on the RH lower corner, to display the "Possible Causes" and the "Service Actions" to step further in the diagnosis.

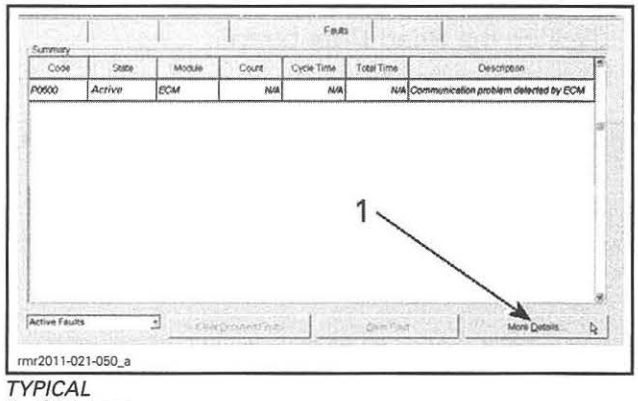

TYPICAL
1. *Click here*

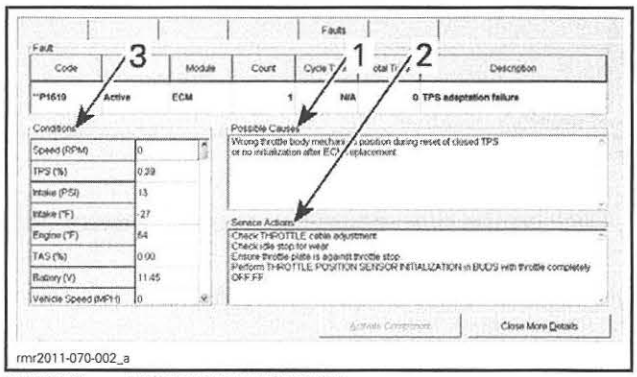

TYPICAL — MORE DETAILS PAGE
1. *Possible causes related to the selected fault*
2. *Service actions*
3. *Operating conditions when fault occurred*

MORE DETAILS PAGE DESCRIPTION	
ITEM	INFORMATION
Possible causes	List the possible causes that triggered the fault
Service actions	List the possible actions to perform to solve the fault
Conditions when fault occurred	List the operating conditions of the engine and/or vehicle when the fault was triggered

Fault Code States

The various electronic control units (ECUs) used in the vehicle can generate a variety of fault codes depending on the level of monitoring they are capable of. Fault codes have 3 possible states:

- Active
- Occurred
- Inactive.

Click the **Fault** tab then click on the drop-down list on the LH lower corner.

Choose the fault code state you want to display.

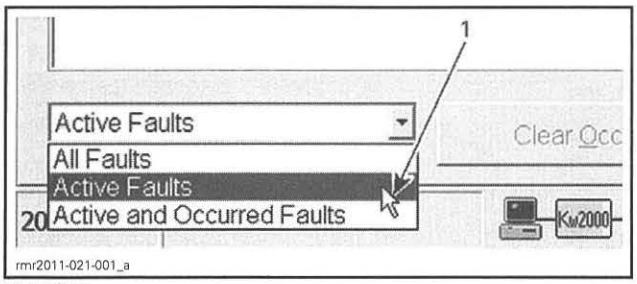

TYPICAL
1. Drop down list

FAULT STATE	INFORMATION
All faults	Display all possible faults regardless of state
Active faults	Display only faults matching this state. Empty area if there is no active fault
Active and occurred faults	Display only faults that have either state. Empty area if there is neither active nor occurred fault

Active Fault Codes

An active fault code is an indication of a fault that is **currently triggered**.

The active fault may or may not compromise normal operation of the related system(s). Service action in B.U.D.S. should be used to correct the problem that caused the fault code.

Once the fault condition(s) of the active fault is no longer present, its state will change to "occurred".

Occurred Fault Codes

An occurred fault code indicates a fault that was active, but **no longer** is.

The occurred fault does not presently affect system or component operation but is retained as a history of the faults that were detected.

Inactive Fault Codes

An inactive fault code represents a fault code that is neither active, nor occurred. It is simply part of a list of all possible faults which may be monitored by the various ECUs, which may become active or occurred if the monitoring system detects an applicable fault.

How to Clear Fault Codes Using B.U.D.S.

Connect vehicle to the latest applicable B.U.D.S. software. Refer to *COMMUNICATION TOOLS AND B.U.D.S.* subsection.

Click on the **Read Data** button.

Click on the **Faults** tab.

NOTE: Only the **Occurred** state faults can be cleared.

Click the "Clear Occurred Faults" button.

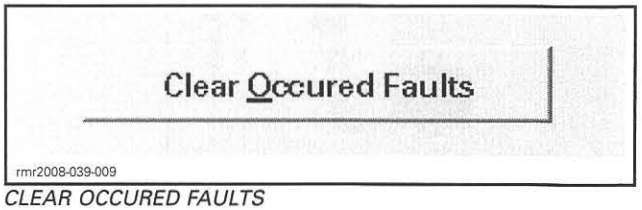

CLEAR OCCURED FAULTS

This will reset the appropriate counter(s) and will also record that the problem has been fixed in the related module memory.

Observe the "Occurred" fault(s). They should all disappear. Otherwise, follow this procedure.

- Remove tether cord cap from engine cut-off switch.
- Wait 3 minutes.
- Repeat procedure to clear faults again.

FAULT CODE DIAGNOSTIC

Missing Module

If a module is missing, several fault codes will appear.

To quickly find which module is missing, perform the following:

1. Connect vehicle to the latest applicable B.U.D.S. software. Refer to *COMMUNICATION TOOLS AND B.U.D.S.* subsection.
2. Click on the **Read Data** button.
3. Click **Module** in the menu bar.
4. Look at the list of modules.
5. If a module is not visible, then it is not communicating through the CAN bus (controller area network).

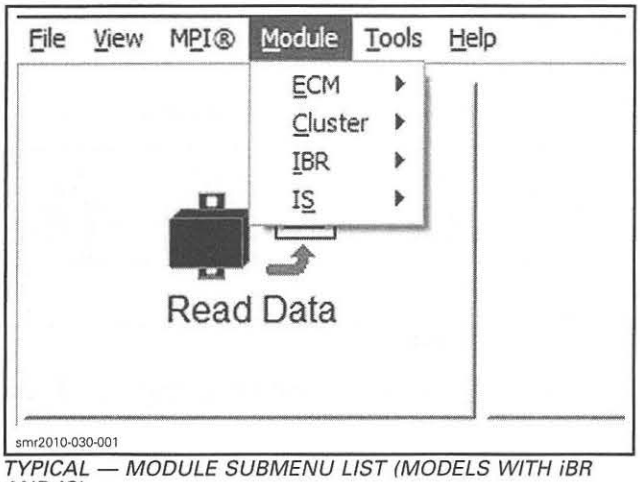

TYPICAL — MODULE SUBMENU LIST (MODELS WITH iBR AND iS)

6. Refer to the following table to find the appropriate subsection in this manual to diagnose the missing module.

MISSING MODULE	SECTION TO REFER TO
ECM	*ELECTRONIC FUEL INJECTION (EFI)*
Cluster	*GAUGE*
iBR	*iBR AND VTS*
iS	*SUSPENSION (iS)*

Diagnostic Tips Using B.U.D.S.

History Page

HISTORY PAGE DESCRIPTION	
ITEM	INFORMATION
Last minute	Displays several parameters recorded in the last minute of engine operation
Minimum/ Maximum	Display the minimum and maximum values encountered. Click "Clear Min/Max" to reset the values
Run time	Display the time proportion in what mode the engine was running in
RPM profile	Display the RPM range proportion in which the engine was running in

To see the last minute of operating conditions, click on the **History** tab in B.U.D.S.

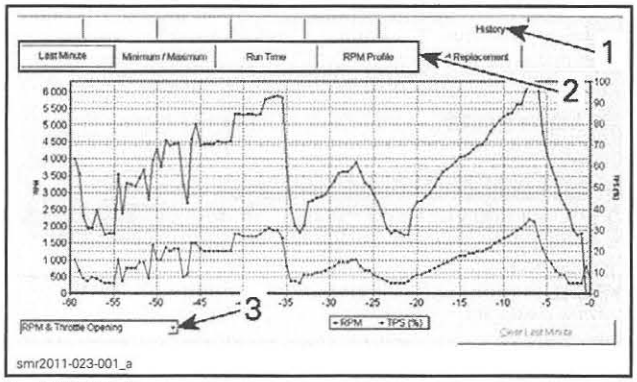

1. *History tab*
2. *Additional history pages*
3. *Drop-down list in Last Minute page*

Last Minute Drop-Down List:

From the **Last Minute** page, click on the drop-down list on the LH lower corner.

Choose the values to display.

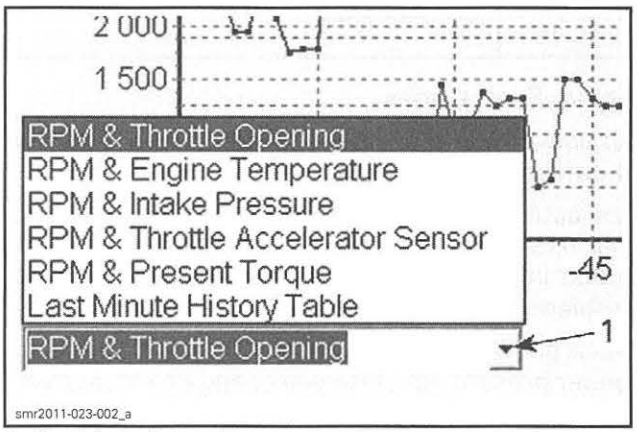

1. *Drop down list*

Guidelines to Solve Fault Codes

CONDITION	ACTION
Troubleshooting vehicle	Use B.U.D.S. to: Read fault codes. Display "Active" faults to see components currently not operating normally. Display "Occurred" faults to troubleshoot intermittent problems. Monitor system(s), sensor(s), switches and actual conditions. Activate component(s) for troubleshooting. Set components etc. Know the last minute of operating conditions by using the "History" page. Know the operating conditions, if available, when a fault code occurred by using the "More details" button in the fault page.
New fault(s) appear after a vehicle maintenance or repair	Check sensor connections or mixed up connections. **Before** vehicle maintenance: Read the electronic modules with B.U.D.S. Save and print the B.U.D.S. file (keep faults option only). **After** vehicle maintenance: Read the electronic modules with B.U.D.S. Compare the fault code(s) before and after the maintenance using the printed copy and the current B.U.D.S. reading. Investigate only the newly fault codes. Clear all occurred faults in B.U.D.S.
Communication faults displayed as "Occurred" after module flashing	Normal behavior when flashing a module. Clear all occurred faults and check again.
Sensor "Active" fault	Read the fault description in B.U.D.S. Click on the "More Details" button. Look at the "Conditions" when available. Read the "Possible Causes". Apply the "Service Actions".
Several fault codes active at the same time	Likely to be caused by burnt fuse(s) or bad bus bar connection(s).
Low system voltage on one module Power problem on sensor(s)	Check related fuse(s) and relay. Check related power and ground wires. Check for common power supply to several sensors/modules (refer to *POWER DISTRIBUTION AND GROUNDS).* **NOTE:** Some sensors are supplied by the battery while others are supplied by a module.
Low system voltage on several modules (several communication faults will also appear)	Check battery condition and connections. Check related fuse(s) and relay. Check voltage regulator/rectifier.
High system voltage on several modules	A battery charger has likely been used to substitute the vehicle battery. Clear all occurred faults and check again. Check voltage regulator/rectifier.
When all modules report that a module is missing	Check the module that is reported as missing. Check related fuse(s) and relay. Check related power and ground wires.
When several modules are in fault	Search for a common problem such as a faulty sensor.

CONDITION	ACTION
CAN bus failure, CAN buss OFF	When several modules and sensors report that a module is missing. The missing module may report CAN bus failure, CAN bus off. Check related CAN wires (continuity, short to ground, short between CAN low and high). Check module pins and wiring terminals. Then, the other modules should stop reporting that module is missing.
Occurred fault(s)	May have been generated due to a system or component that was momentarily operating outside normal parameters.
	May be generated when disconnecting and reconnecting a component, replacing a burnt fuse, or may be due to a momentary high or low voltage.
	Before being "Occurred", a fault has always been "Active" for a certain time, indicating that an unexpected condition or problem has been present during the driving cycle. A frequent momentarily fault or an intermittent fault may never be seen as "Active" in B.U.D.S. while there is still a pending problem. This type of malfunctions can be discovered by looking at the "Occurred" faults and then by evaluating the fault count. As long as a fault is present, it is displayed as "Active".
Fault count (0 - 255)	**Low value:** Suggests handling problems (connections, terminal contact/shape etc.). **High value:** Suggests a frequent and unsolved problem. The problem should be investigated.
Fault conditions (More details button)	Look for abnormal, excessive values.
Hard to find problems	When the basic troubleshooting has been done and the fault code(s) persists, often the problem is related to the wiring harness, connections or electromechanical components. Short to ground, to battery or between wires. Wire splices, chafing, terminal problems (pulled out, bent, out of shape, corroded etc.). Bad contacts in switch or relay.

GUIDELINES TO SOLVE SPECIFIC FAULT CODES

Several Fault Codes Are Active Simultaneously

If this occurs, check the following:

- Check the 30 A fuses in fuse box.
- Check the bus bar condition and connections in the fuse box(es).
- Check the diagnostic connector for the presence of water or corrosion.
- Check the CAN wires.

Fault Code C2100

iBR Sensors calibration is corrupted If the fault comes active when the iBR is activated and stays active, verify if a software update is available.

Fault Code C2120

iBR Application calibration is corrupted If the fault comes active when the iBR is activated and stays active, verify if a software update is available.

Fault Code C2121, C2221

iBR or iS application parameters corrupted (backup no. 1 or no. 2). This fault may occasionally appear as occurred. It happens when power to the module is shut off before the module has time to complete its shutdown. Normal operation is not affected. If it occurs often, check supply voltage to module.

Fault Code C2150, C2233, C2250

iBR or iS motor or system current software breaker. Motor or module current too high. This fault may occasionally appear as occurred. Normal operation is not affected. If it the count is high, check the moving mechanism of the system if it is stiffer than normal to operate.

Fault Code C2232

Motor open. If suspension operates when using the iS Up/Down switches, the suspension will operate normally when riding even if this fault is active. In this case, the fault can be ignored. The fault will be set to "occurred" when the iS module will be shut down. If the suspension does not operate when using the iS Up/Down switches, refer to *SUSPENSION (iS)* subsection.

Fault Code P0562

Battery voltage too low. It occurs when both battery voltage and engine RPM conditions are met. See following chart. Refer to *CHARGING SYSTEM* subsection.

BATTERY VOLTAGE	ENGINE SPEED
Lower than 6.5 Vdc	Lower than 1280 RPM
Lower than 11.8 Vdc	Greater than 1280 RPM

Fault Code P0563

Battery voltage too high. It occurs when battery voltage is above 16 Vdc when engine is running. Refer to *CHARGING SYSTEM*.

Fault Code P0171

Multiplicative mixture adaptation exceeds upper limit--> mixture too lean. An open signal on the engine coolant temperature (CTS) can trigger that fault. Refer to *ELECTRONIC FUEL INJECTION (EFI)* subsection.

Fault Code P0172

Multiplicative mixture adaptation below lower limit--> mixture too rich. An open signal on the engine coolant temperature (CTS) can trigger that fault. Refer to *ELECTRONIC FUEL INJECTION (EFI)* subsection.

Fault Code P1171

Additive mixture adaptation exceeds upper limit--> mixture too lean. An open signal on the engine coolant temperature (CTS) can trigger that fault. Refer to *ELECTRONIC FUEL INJECTION (EFI)* subsection.

Fault Code P1172

Additive mixture adaptation below lower limit --> mixture too rich. An open signal on the engine coolant temperature (CTS) can trigger that fault. Refer to *ELECTRONIC FUEL INJECTION (EFI)* subsection.

Fault Code U016A

Loss of vehicle speed. This fault may occasionally appear as occurred. Normal operation is not affected. If the count is high, check the related components.

Fault Code U0129

CAN communication error between iS and iBR modules or **iBR CAN message time-out or validity.** This fault may occasionally appear as oc-

curred. Normal operation is not affected. If the count is high, check the related components. Ensure connector is plugged.

Fault Code U0300

Incorrect ECM or information center for the engine. Installed part is not appropriate for the vehicle. Using BUDS, check if the security coding of the cluster is matched with the ECM security coding. **Engine will crank but will not start**. Refer to *PARTS CATALOGS* for proper part according to vehicle.

FAULT CODE TABLE

NOTE: Always refer to the fault code list available in the latest applicable version of B.U.D.S. software.

When using the service action suggested in the Fault section of B.U.D.S., the system circuits are referred as A-M4 for instance. It means ECM connector "A" and the circuit wire M4 as found in the *WIRING DIAGRAM*.

PCODE	MODEL	DESCRIPTION	CAUSE	ACTION
B2210	CLUSTER	Left keypad fault (Switch kept activated more than 60 seconds)	Problem with left keypad.	The switch may be defective, verify the functionality of the switch or the wires. Refer to the *SHOP MANUAL* for *SWITCH DIAGNOSIS/TESTING* procedure.
B2211	CLUSTER	Suspension UP/DOWN or SPORT/ECO switches shorted to ground fault	Problem with left keypad.	Look for pin B if shorted to ground or pin C.
B2212	CLUSTER	Suspension UP/DOWN or SPORT/ECO switches disconnected fault	Problem with left keypad.	Look for pin B if disconnected to pin 14 on the cluster. Look for pin C if disconnected to pin 15 on the cluster.
B2213	CLUSTER	VTS UP/DOWN switches shorted to ground fault	Problem with left keypad.	Look for pin A if shorted to ground or pin C.
B2214	CLUSTER	VTS UP/DOWN switches disconnected fault	Problem with left keypad.	Look for pin A if disconnected to pin 13 on the cluster. Look for pin C if disconnected to pin 15 on the cluster.
B2220	CLUSTER	Right keypad fault (Switch kept activated more than 60 seconds)	Problem with right keypad.	The switch may be defective, verify the functionality of the switch or the wires. Refer to the *SHOP MANUAL* for *SWITCH DIAGNOSIS/TESTING* procedure.
B2221	CLUSTER	MODE/SET switches shorted to ground fault	Problem with right keypad.	Look for pin B if shorted to ground or pin C.
B2222	CLUSTER	MODE/SET switches disconnected fault	Problem with right keypad.	Look for pin B if disconnected to pin 17 on the cluster. Look for pin C if disconnected to pin 18 on the cluster.
B2223	CLUSTER	UP/DOWN switches shorted to ground fault	Problem with right keypad.	Look for pin A if shorted to ground or pin C.
B2224	CLUSTER	UP/DOWN switches disconnected fault	Problem with right keypad.	Look for pin A if disconnected to pin 16 on the cluster. Look for pin C if disconnected to pin 18 on the cluster.

PCODE	MODEL	DESCRIPTION	CAUSE	ACTION
C0042	IBR	Brake Lever Sensor (BRLS) signals A open/shorted to ground	Damaged sensor, damaged circuit wires, damaged connector or damaged iBR pins. Fault detected when the engine is running or stopped.	Check for 0,5 to 3V on pin F and 0,25 to 1.5 on pin C.
C0043	IBR	Brake Lever Sensor (BRLS) signals B open/shorted to ground	Damaged sensor, damaged circuit wires, damaged connector or damaged iBR pins. Fault detected when the engine is running or stopped.	Check for 0,5 to 3V on pin F and 0,25 to 1.5 on pin C.
C0073	IBR	Torque request failure	CPS wires shorted. Bad connection on the engine coolant temp sensor.	Perform ECM software update if available. Verify CPS connection. Verify engine temperature if it is plausible. A bad connection with the CTS can generate this fault when the iBR is used.
C2100	IBR	Sensors calibration is corrupted	Incompatible firmware or memory failure.	If the fault comes active when the iBR is activated and stays active, verify if a software update is available. Refer to the *SHOP MANUAL* for more details.
C2100	IBR	Actuator movement	The reverse gate cannot move to the desired position. (stuck or motor open).	Clean and check for damage/wear parts in the reverse system and nozzle area. Check iBR electrical motor wiring. Isolate the iBR output shaft from the reverse system and activate the iBR, if the fault comes active, replace iBR. Refer to the *SHOP MANUAL* for more details.
C2101	IBR	Actuator movement warning	The reverse gate cannot move to the desired position within expected time.	Clean and check for damage/wear parts in the reverse system and nozzle area. Check iBR electrical motor wiring. Isolate the iBR output shaft from the reverse system and activate the iBR, if the fault comes active, replace iBR. Refer to the *SHOP MANUAL* for more details.
C2110	IBR	Reverse gate position sensor error	iBR malfunction.	If the fault comes active when the iBR is activated and stays active, verify if a software update is available. Refer to the *SHOP MANUAL* for more details.
C2110	IBR	Angle position sensor warning	iBR malfunction.	If the fault comes active when the iBR is activated and stays active, verify if a software update is available. Refer to the *SHOP MANUAL* for more details.

PCODE	MODEL	DESCRIPTION	CAUSE	ACTION
C2110	IBR	Monitoring CPU message time out or validity	iBR malfunction.	Perform an iBR software update if available and clear the fault. Replace the iBR unit if the fault remains active. Refer to the *SHOP MANUAL* for more details.
C2110	IBR	Monitoring CPU limp force	iBR malfunction.	Perform an iBR software update if available. Replace the iBR unit if the fault remains active Refer to the *SHOP MANUAL* for more details.
C2110	IBR	iBR overheat	iBR cooling system failure. iBR unit failure.	Check iBR cooling circuit. Refer to the *SHOP MANUAL* for more details.
C2111	IBR	ECM erratic RPM signal	RPM signal received from engine ECM not plausible.	Check CPS sensor connection
C2120	IBR	Application calibration is corrupted	Incompatible firmware or memory failure.	If the fault comes active when the iBR is activated and stays active, verify if a software update is available. Refer to the *SHOP MANUAL* for more details.
C2121	IBR	Application parameters corrupted (backup #1 or #2)	Unexpected battery power lost or memory failure. Ignore fault if "occured"	Verify starting and charging system circuits. Clear fault Refer to the *SHOP MANUAL* for more details.
C2130	IBR	Motor current software breaker	iBR motor current too high. Battery power failure. iBR unit failure.	Clean and check for damage in the reverse gate and nozzle area. Refer to the *SHOP MANUAL* for more details.
C2130	IBR	Internal motor drive failure	Motor voltage feedback not fitting with the command.	
C2131	IBR	iBR DC motor shorted to ground or 12V	iBR motor failure. iBR motor wires dammaged. Battery power failure. iBR unit failure.	Perform an iBR update with BUDS Check iBR battery power Check iBR Motor Wiring Refer to the *SHOP MANUAL* for more details.
C2132	IBR	Motor Open	No current while activated.	Verify if the motor is properly connected to the iBR housing
C2142	IBR	Brake Lever Sensor (BRLS) signals A shorted to battery	Damaged sensor, damaged circuit wires, damaged connector or damaged iBR pins. Fault detected when the engine is running or stopped.	Check for 0,5 to 3V on pin F and 0,25 to 1.5 on pin C.
C2143	IBR	Brake Lever Sensor (BRLS) signals B shorted to battery	Damaged sensor, damaged circuit wires, damaged connector or damaged iBR pins. Fault detected when the engine is running or stopped.	Check for 0,5 to 3V on pin F and 0,25 to 1.5 on pin C.

PCODE	MODEL	DESCRIPTION	CAUSE	ACTION
C2144	IBR	Brake Lever Sensor (BRLS) power shorted to battery	Damaged sensor, damaged circuit wires, damaged connector or damaged iBR pins. Fault detected when the engine is running or stopped.	Check for 4.5 to 5 volts on sensor connector pin AandD. Refer to the *SHOP MANUAL* for more details.
C2145	IBR	Brake Lever Sensor (BRLS) power shorted to ground	Damaged sensor, damaged circuit wires, damaged connector or damaged iBR pins. Fault detected when the engine is running or stopped.	Check for 4.5 to 5 volts on sensor connector pin AandD. Refer to the *SHOP MANUAL* for more details.
C2146	IBR	Brake Lever Sensor (BRLS) signals A/B reading difference	Damaged sensor, damaged circuit wires, damaged connector or damaged iBR pins. Fault detected when the engine is running or stopped.	Check for 0,5 to 3V on pin F and 0,25 to 1.5 on pin C.
C2150	IBR	System current software breaker	iBR input current too high.	Clean and check for damage in the reverse gate and nozzle area. Refer to the *SHOP MANUAL* for more details.
C2151	IBR	System disabled and need activation	System is locked. Need activation.	Use B.U.D.S. iBR unlock function. Refer to the <ref>shop manual</ref> for more details.
C2155	IBR	Water temperature sensor overheat	iBR cooling system failure. iBR unit failure.	Check iBR cooling circuit. Replace iBR unit. Refer to the *SHOP MANUAL* for more details.
C2161	IBR	Low voltage detected	Battery failure, rectifier failure, damaged circuit wires, battery terminal connection, damaged AC generator or damaged connectors. Ignore fault if "occured".	Check fuses #6 (refer to *WIRING DIAGRAM*). Check ground continuity to the engine block. Refer to the *SHOP MANUAL* for more details.
C2200	IS	Sensors calibration is corrupted	Incompatible firmware or memory failure.	If the fault comes active when the iS is activated and stays active, verify if a software update is available. Refer to the *SHOP MANUAL* for more details.
C2210	IS	Bridge/CPU temperature sensor overheat	Hardware failure or external heat source.	Check for over utilization/heat.
C2220	IS	Application calibration is corrupted	Incompatible firmware or memory failure.	If the fault comes active when the iS is activated and stays active, verify if a software update is available. Refer to the *SHOP MANUAL* for more details.
C2221	IS	Application parameters corrupted (backup #1 or #2)	Unexpected battery power lost or memory failure. Ignore fault if "occured".	Verify starting and charging system circuits. Clear fault Refer to the *SHOP MANUAL* for more details.

PCODE	MODEL	DESCRIPTION	CAUSE	ACTION
C2230	IS	Internal motor drive failure	Motor voltage feedback not fitting with the command.	If the fault comes active when the iS is activated and stays active, verify if a software update is available. Refer to the *SHOP MANUAL* for more details.
C2231	IS	Motor shorted to ground/battery	Current leak detected when the bridge is off.	Check suspension actuator pump wiring.
C2232	IS	Motor open	No current while activated.	Check suspension actuator pump and/or wiring.
C2233	IS	Motor current software breaker	Motor current too high.	Check suspension actuator pump.
C2240	IS	Seat position sensor error Open, Shorted to GND	Sensor not connected.	Check system circuit at iS module. Refer to *WIRING DIAGRAM*
C2250	IS	System current software breaker	Battery input current too high.	Check suspension actuator pump.
C2251	IS	System disabled and need activation	System is locked for safety. Need activation.	Activate iS using B.U.D.S. activation function.
C2252	IS	TOPS active	Warning only: TOPS detected by the system, the suspension is disable while the TOPS is "ON".	Refer to the *SHOP MANUAL* for more details.
C2260	IS	System under voltage	System under voltage warning.	Check battery and charging system.
P0106	ECM	Intake pressure sensor out of range	Sensing port dirty or blocked. Sensor failure or unexpected reading at idle. Sensor fallen out of housing or leaking inlet. For a leak of the Intake Manifold, the ECM will diagnose it only if the RPM is greater than 5000 RPM.	Check system circuits A-B4, A-G4, A-H2. Make sure that the sensor housing is correctly inserted into the manifold. Check sensor connector for: a) 5 volts supply from ECM on pin 1. b) Ground supply from ECM on pin 2. c) Analog voltage from sensor to ECM on pin 3. Refer to the *SHOP MANUAL* for more details.
P0107	ECM	Manifold absolute pressure sensor shorted to ground or not connected	Sensing port dirty or blocked. Sensor failure or unexpected reading at idle. Sensor fallen out of housing or leaking inlet. Connector disconnected.	Check system circuits A-B4, A-G4, A-H2. Make sure that the sensor housing is correctly inserted into the manifold. Check sensor connector for: a) 5 volts on pin 1. b) 0 volt on pin 2. c) 0 volt on pin 3. Refer to the *SHOP MANUAL* for more details.

PCODE	MODEL	DESCRIPTION	CAUSE	ACTION
P0108	ECM	Manifold absolute pressure sensor open circuit or shorted to battery	Sensing port dirty or blocked. Sensor failure or unexpected reading at idle. Sensor fallen out of housing or leaking inlet.	Check system circuits A-B4, A-G4, A-H2. Make sure that the sensor housing is correctly inserted into the manifold. Check sensor connector for: a) 5 volts on pin 1. b) 0 volt on pin 2. c) 0 volt on pin 3. Refer to the *SHOP MANUAL* for more details.
P0112	ECM	Intake manifold temperature sensor shorted to ground	Damaged sensor, damaged circuit wires, damaged connector or damaged ECM pins.	Check the sensor for approximately 2280 to 2736 ohms at 19 to 21°C (66 to 70°F). Check for approximately 2280 to 2736 ohms at 19 to 21°C (66 to 70°F) between ECM connector pins A-H3 and A-J3. Refer to the *SHOP MANUAL* for more details.
P0113	ECM	Intake manifold temperature sensor open circuit or shorted to battery	Damaged sensor, damaged circuit wires, damaged connector or damaged ECM pins.	Check the sensor for approximately 2280 to 2736 ohms at 19 to 21°C (66 to 70°F). Check for approximately 2280 to 2736 ohms at 19 to 21°C (66 to 70°F) between ECM connector pins A-H3 and A-J3. Refer to the *SHOP MANUAL* for more details.
P0116	ECM	Engine coolant temperature signal not plausible	Damaged sensor, damaged circuit wires, damaged connector or damaged ECM pins.	Check for debris or blockage in cooling system. Check the sensor for approximately 2280 to 2736 ohms at 19 to 21°C (66 to 70°F). Check for approximately 2280 to 2736 ohms at 19 to 21°C (66 to 70°F) between ECM connector pins A-A1 and A-J2. Refer to the *SHOP MANUAL* for more details.
P0117	ECM	Engine coolant temperature sensor fault - Short circuit to GND	Damaged sensor, damaged circuit wires, damaged connector or damaged ECM pins.	Check for debris or blockage in cooling system. Check the sensor for approximately 2280 to 2736 ohms at 19 to 21°C (66 to 70°F). Check for approximately 2280 to 2736 ohms at 19 to 21°C (66 to 70°F) between ECM connector pins A-A1 and A-J2. Refer to the *SHOP MANUAL* for more details.

PCODE	MODEL	DESCRIPTION	CAUSE	ACTION
P0118	ECM	Engine coolant temperature sensor fault - Short circuit to V+ or connector disconnected	Engine overheated or damaged sensor. Connector disconnected.	Check for debris or blockage in cooling system. Check the sensor for approximately 2280 to 2736 ohms at 19 to 21°C (66 to 70°F). Check for approximately 2280 to 2736 ohms at 19 to 21°C (66 to 70°F) between ECM connector pins A-A1 and A-J2. Refer to the *SHOP MANUAL* for more details.
P0122	ECM	TAS (Throttle Accelerator sensor) 1 fault (short circuit to GND)	Damaged sensor, damaged circuit wires, damaged connector or damaged ECM pins.	Check system circuits B-E1, B-K1, B-K3. Check for 0 volt on sensor connector pin E. Check for 5 volts on sensor connector pin D. Check for 0.5 to 3 volts on sensor connector pin F. Refer to the *SHOP MANUAL* for more details.
P0123	ECM	TAS (Throttle Accelerator sensor) 1 fault (short circuit to battery)	Damaged sensor, damaged circuit wires, damaged connector or damaged ECM pins.	Check system circuits B-E1, B-K1, B-K3. Check for 0 volt on sensor connector pin E. Check for 5 volts on sensor connector pin D. Check for 0.5 to 3 volts on sensor connector pin F. Refer to the *SHOP MANUAL* for more details.
P0127	ECM	Intercooler system fault	High air intake temperature detected. Fault detected when the engine is running and stopped. Blocked intercooler water circuit.	Clean intercooler water circuit system. Refer to the *SHOP MANUAL* for more details.
P0171	ECM	Multiplicative mixture adaptation exeeds upper limit--> mixture too lean		An open signal on the Engine coolant temperature (CTS) can trigger that fault
P0172	ECM	Multiplicative mixture adaptation below lower limit--> mixture too rich		An open signal on the Engine coolant temperature (CTS) can trigger that fault

PCODE	MODEL	DESCRIPTION	CAUSE	ACTION
P0201	ECM	Injection Power Stage fault - open line/Cylinder 1	Damaged injector, damaged circuit wires, damaged connector or damaged ECM output pins.	Check for 11.4 to 12.6 ohms between engine connector pin 2 and ECM connector pin A-B3. Check for 12 volts on pin 2 of injector connector. Check FUSE #13 (refer to *WIRING DIAGRAM*) Check for damaged circuit wires. Refer to the *SHOP MANUAL* for more details.
P0202	ECM	Injection Power Stage fault - open line/Cylinder 2	Damaged injector, damaged circuit wires, damaged connector or damaged ECM output pins.	Check for 11.4 to 12.6 ohms between engine connector pin 2 and ECM connector pin A-K1. Check for 12 volts on pin 2 of injector connector. Check FUSE #14 (refer to *WIRING DIAGRAM*) Check for damaged circuit wires Refer to the *SHOP MANUAL* for more details.
P0203	ECM	Injection Power Stage fault - open line/Cylinder 3	Damaged injector, damaged circuit wires, damaged connector or damaged ECM output pins.	Check for 11.4 to 12.6 ohms between engine connector pin 3 and ECM connector pin A-J1. Check for 12 volts on pin 2 of injector connector. Check FUSE #15 (refer to *WIRING DIAGRAM*) Check for damaged circuit wires. Refer to the *SHOP MANUAL* for more details.
P0217	ECM	High engine coolant temperature detected	High engine coolant temperature detected.	Check for debris or blockage in cooling system. Check the sensor for approximately 2280 to 2736 ohms at 19 to 21°C (66 to 70°F). Check for approximately 2280 to 2736 ohms at 19 to 21°C (66 to 70°F) between ECM connector pins A-A1 and A-J2. Refer to the *SHOP MANUAL* for more details.
P0222	ECM	TAS (Throttle Accelerator sensor) 2 fault (short circuit to GND)	Damaged sensor, damaged circuit wires, damaged connector or damaged ECM pins.	Check system circuits B-A3, B-B3, B-J3. Check for 0 volt on sensor connector pin B. Check for 5 volts on sensor connector pin A. Check for 0.25 to 1.5 volts on sensor connector pin C. Refer to the *SHOP MANUAL* for more details.

PCODE	MODEL	DESCRIPTION	CAUSE	ACTION
P0223	ECM	TAS (Throttle Accelerator sensor) 2 fault (short circuit to battery)	Damaged sensor, damaged circuit wires, damaged connector or damaged ECM pins.	Check system circuits B-A3, B-B3, B-J3. Check for 0 volt on sensor connector pin B. Check for 5 volts on sensor connector pin A. Check for 0.25 to 1.5 volts on sensor connector pin C. Refer to the *SHOP MANUAL* for more details.
P0231	ECM	Fuel pump open circuit or short to ground	Damaged pump, damaged circuit wires, damaged connector or damaged ECM output pins.	Check for approximately 1 ohm between pins A and B of the fuel pump connector. Check FUSE #18 (refer to *WIRING DIAGRAM*) Check for damaged circuit wires. Check for damaged connector, damaged ECM output pins or ECM failure. Refer to the *SHOP MANUAL* for more details.
P0232	ECM	Fuel pump short circuit to battery	Damaged pump, damaged circuit wires, damaged connector or damaged ECM output pins.	Check for approximately 1 ohm between pins A and B of the fuel pump connector. Check FUSE #18 (refer to *WIRING DIAGRAM*) Check for damaged circuit wires. Check for damaged connector, damaged ECM output pins or ECM failure. Refer to the *SHOP MANUAL* for more details.
P0261	ECM	Injector 1 open circuit or shorted to ground	Damaged injector, damaged circuit wires, damaged connector or damaged ECM output pins.	Check for 11.4 to 12.6 ohms between engine connector pin 1 and ECM connector pin A-B3. Check for 12 volts on pin 2 of injector connector. Check FUSE #13 (refer to *WIRING DIAGRAM*) Check for damaged circuit wires. Refer to the *SHOP MANUAL* for more details.
P0262	ECM	Injector 1 shorted to battery	Damaged injector, damaged circuit wires, damaged connector or damaged ECM output pins.	Check for 11.4 to 12.6 ohms between engine connector pin 1 and ECM connector pin A-B3. Check for 12 volts on pin 2 of injector connector. Check FUSE #13 (refer to *WIRING DIAGRAM*) Check for damaged circuit wires. Refer to the *SHOP MANUAL* for more details.

PCODE	MODEL	DESCRIPTION	CAUSE	ACTION
P0264	ECM	Injector 2 open circuit or shorted to ground	Damaged injector, damaged circuit wires, damaged connector or damaged ECM output pins.	Check for 11.4 to 12.6 ohms between engine connector pin 2 and ECM connector pin A-K1. Check for 12 volts on pin 2 of injector connector. Check FUSE #14 (refer to *WIRING DIAGRAM*) Check for damaged circuit wires. Refer to the *SHOP MANUAL* for more details.
P0265	ECM	Injector 2 shorted to battery	Damaged injector, damaged circuit wires, damaged connector or damaged ECM output pins.	Check for 11.4 to 12.6 ohms between engine connector pin 2 and ECM connector pin A-K1. Check for 12 volts on pin 2 of injector connector. Check FUSE #14 (refer to *WIRING DIAGRAM*) Check for damaged circuit wires. Refer to the *SHOP MANUAL* for more details.
P0267	ECM	Injector 3 open circuit or shorted to ground	Damaged injector, damaged circuit wires, damaged connector or damaged ECM output pins.	Check for 11.4 to 12.6 ohms between engine connector pin 3 and ECM connector pin A-J1. Check for 12 volts on pin 2 of injector connector. Check FUSE #15 (refer to *WIRING DIAGRAM*) Check for damaged circuit wires. Refer to the *SHOP MANUAL* for more details.
P0268	ECM	Injector 3 shorted to battery	Damaged injector, damaged circuit wires, damaged connector or damaged ECM output pins.	Check for 11.4 to 12.6 ohms between engine connector pin 3 and ECM connector pin A-J1. Check for 12 volts on pin 2 of injector connector. Check FUSE #15 (refer to *WIRING DIAGRAM*) Check for damaged circuit wires. Refer to the *SHOP MANUAL* for more details.
P0300	ECM	Multiple misfire detected		
P0301	ECM	Misfire cylinder 2 (physical cylinder 1)		
P0302	ECM	Misfire cylinder 0 (physical cylinder 2)		
P0303	ECM	Misfire cylinder 1 (physical cylinder 3)		

PCODE	MODEL	DESCRIPTION	CAUSE	ACTION
P0325	ECM	Knock sensor 1 fault	Damaged sensor, damaged circuit wires, damaged connector or damaged ECM output pins. Open circuit.	Bring engine to 5000 RPM. If fault code appears then check for approximately 5 Mohms between system circuits A-C3 and A-G2. Refer to the *SHOP MANUAL* for more details.
P0335	ECM	Crankshaft signal error	Damaged sensor, damaged circuit wires, damaged connector, damaged ECM pins or damaged tooth wheel. Connector disconnected.	For the CPS, check for 700 to 900 ohms between terminals A-H1 and A-K2 of ECM connector. Refer to the *SHOP MANUAL* for more details.
P0340	ECM	Camshaft 1 signal error	Damaged sensor, damaged circuit wires, damaged connector, damaged ECM pins or damaged tooth wheel.Connector disconnected.	For the CAPS, check for 12 volts on sensor connector pin 3. Check continuity for circuits A-D4, A-E2 and terminal 4 on engine connector. Check FUSE #12 (refer to *WIRING DIAGRAM*) Engine must run to erase the corrected fault. Refer to the *SHOP MANUAL* for more details.
P0351	ECM	Ignition coil 1 open circuit or shorted to ground or to battery	Damaged coil, damaged circuit wires, damaged connector or damaged ECM output pins.	Check for 0.85 to 1.15 ohms between engine connector pin 1 and ECM connector pin A-M4. Check for 12 volts on pin 2 of coil connector. Check FUSE #13 (refer to *WIRING DIAGRAM*) Refer to the *SHOP MANUAL* for more details.
P0352	ECM	Ignition coil 2 open circuit or shorted to ground or to battery	Damaged coil, damaged circuit wires, damaged connector or damaged ECM output pins.	Check for 0.85 to 1.15 ohms between engine connector pin 1 and ECM connector pin A-M2. Check for 12 volts on pin 2 of coil connector. Check FUSE #14 (refer to *WIRING DIAGRAM*) Refer to the *SHOP MANUAL* for more details.
P0353	ECM	Ignition coil 3 open circuit or shorted to ground or to battery	Damaged coil, damaged circuit wires, damaged connector or damaged ECM output pins.	Check for 0.85 to 1.15 ohms between engine connector pin 3 and ECM connector pin A-M1. Check for 12 volts on pin 2 of coil connector. Check FUSE #15 (refer to *WIRING DIAGRAM*) Refer to the *SHOP MANUAL* for more details.

PCODE	MODEL	DESCRIPTION	CAUSE	ACTION
P0354	ECM	Ignition Power Stage fault - short circuit to GND/Cylinder 1	Damaged coil, damaged circuit wires, damaged connector or damaged ECM output pins.	Check for 0.85 to 1.15 ohms between engine connector pin 1 and ECM connector pin A-M4. Check for 12 volts on pin 2 of coil connector. Check FUSE #13 (refer to *WIRING DIAGRAM*) Refer to the *SHOP MANUAL* for more details.
P0355	ECM	Ignition Power Stage fault - short circuit to GND/Cylinder 2	Damaged coil, damaged circuit wires, damaged connector or damaged ECM output pins.	Check for 0.85 to 1.15 ohms between engine connector pin 1 and ECM connector pin A-M2. Check for 12 volts on pin 2 of coil connector. Check FUSE #14 (refer to *WIRING DIAGRAM*) Refer to the *SHOP MANUAL* for more details.
P0356	ECM	Ignition Power Stage fault - short circuit to GND/Cylinder 3	Damaged coil, damaged circuit wires, damaged connector or damaged ECM output pins.	Check for 0.85 to 1.15 ohms between engine connector pin 3 and ECM connector pin A-M1. Check for 12 volts on pin 2 of coil connector. Check FUSE #15 (refer to *WIRING DIAGRAM*) Refer to the *SHOP MANUAL* for more details.
P0357	ECM	Ignition Power Stage fault - short circuit to V+/Cylinder 1	Damaged coil, damaged circuit wires, damaged connector or damaged ECM output pins.	Check for 0.85 to 1.15 ohms between engine connector pin 1 and ECM connector pin A-M4. Check for 12 volts on pin 2 of coil connector. Check FUSE #13 (refer to *WIRING DIAGRAM*) Refer to the *SHOP MANUAL* for more details.
P0358	ECM	Ignition Power Stage fault - short circuit to V+/Cylinder 2	Damaged coil, damaged circuit wires, damaged connector or damaged ECM output pins.	Check for 0.85 to 1.15 ohms between engine connector pin 1 and ECM connector pin A-M2. Check for 12 volts on pin 2 of coil connector. Check FUSE #14 (refer to *WIRING DIAGRAM*) Refer to the *SHOP MANUAL* for more details.
P0359	ECM	Ignition Power Stage fault - short circuit to V+/Cylinder 3	Damaged coil, damaged circuit wires, damaged connector or damaged ECM output pins.	Check for 0.85 to 1.15 ohms between engine connector pin 3 and ECM connector pin A-M1. Check for 12 volts on pin 2 of coil connector. Check FUSE #15 (refer to *WIRING DIAGRAM*) Refer to the *SHOP MANUAL* for more details.

PCODE	MODEL	DESCRIPTION	CAUSE	ACTION
P0360	ECM	Ignition Power stage max errorandfalse detection of low battery voltage/Cylinder 1	Signal not plausible, verify battery voltage too low during ignition.	Check for 0.85 to 1.15 ohms between engine connector pin 1 and ECM connector pin A-M4. Check for 12 volts on pin 2 of coil connector. Check FUSE #13 (refer to *WIRING DIAGRAM*) Refer to the *SHOP MANUAL* for more details.
P0361	ECM	Ignition Power stage max errorandfalse detection of low battery voltage/Cylinder 2	Signal not plausible, verify battery voltage too low during ignition.	Check for 0.85 to 1.15 ohms between engine connector pin 1 and ECM connector pin A-M2. Check for 12 volts on pin 2 of coil connector. Check FUSE #14 (refer to *WIRING DIAGRAM*) Refer to the *SHOP MANUAL* for more details.
P0362	ECM	Ignition Power stage max errorandfalse detection of low battery voltage/Cylinder 3	Signal not plausible, verify battery voltage too low during ignition.	Check for 0.85 to 1.15 ohms between engine connector pin 3 and ECM connector pin A-M1. Check for 12 volts on pin 2 of coil connector. Check FUSE #15 (refer to *WIRING DIAGRAM*) Refer to the *SHOP MANUAL* for more details.
P0500	ECM	Vehicle speed signal fault	Cluster fault detected by ECM C.A.N. circuit failure, Instrument cluster or ECM failure.	Check C.A.N. circuits wires. Replace instrument cluster. Verify outside of the building if the GPS LED becomes active after 1 minute and stays steady Refer to the *SHOP MANUAL* for more details.
P0501	ECM	Vehicle speed not plausible	Cluster or iBR fault detected by ECM. C.A.N. circuit failure, Instrument cluster, iBR or ECM failure.	Check C.A.N. circuits wires. Replace instrument cluster. Verify outside of the building if the GPS LED becomes active after 1 minute and stays steady Refer to the *SHOP MANUAL* for more details.
P0512	ECM	Starter power stage detects high current	Damaged solenoid, damaged circuit wires, damaged connector or damaged ECM.	Verify FUSE #16 (5AMP). Check for 12 volts on pin 2 of the starter relay. Refer to the *SHOP MANUAL* for more details.
P0513	ECM	Invalid D.E.S.S. Key detected	Key not programmed in ECU.	Program a good key
P0520	ECM	Oil pressure switch functional problem	Engine leak, oil pump failure, damaged sensor, damaged circuit wires, damaged connector or damaged ECM pins.	Check resistance at 0 RPM and above 3500 RPM. Switch is normally closed, ECM connector pin A-E3 Refer to the *SHOP MANUAL* for more details.

PCODE	MODEL	DESCRIPTION	CAUSE	ACTION
P0523	ECM	Oil pressure sensor fault	Engine leak, oil pump failure, damaged sensor, damaged circuit wires, damaged connector or damaged ECM pins. Fault detected when the engine is running or stopped.	Check resistance at 0 RPM and above 3500 RPM. Refer to the *SHOP MANUAL* for more details.
P0524	ECM	Low oil pressure condition	Low oil level, engine leak, oil pump fault.	Check oil level. Check impedance of sensor. Refer to the *SHOP MANUAL* for more details.
P0544	ECM	Exhaust gas temperature sensor functional problem	Damaged sensor, damaged circuit wires, damaged connector or damaged ECM output pins.	Check for approximately 2280 to 2736 ohms at temperature of 19 to 21°C (66 to 70°F) between system circuits A-H4 and A-J4. Refer to the *SHOP MANUAL* for more details.
P0545	ECM	Exhaust gas temperature sensor shorted to ground	Damaged sensor, damaged circuit wires, damaged connector or damaged ECM output pins.	Check for approximately 2280 to 2736 ohms at temperature of 19 to 21°C (66 to 70°F) between system circuits A-H4 and A-J4. Refer to the *SHOP MANUAL* for more details.
P0546	ECM	Exhaust gas temperature sensor open circuit or shorted to battery	Damaged sensor, damaged circuit wires, damaged connector or damaged ECM output pins.	Check for approximately 2280 to 2736 ohms at temperature of 19 to 21°C (66 to 70°F) between system circuits A-H4 and A-J4. Refer to the *SHOP MANUAL* for more details.
P0560	ECM	Battery voltage not plausible	Battery failure, rectifier failure, damaged circuit wires, battery terminal connection, damaged AC generator or damaged connectors.	Check fuses #6 (refer to *WIRING DIAGRAM*). Check ground continuity to the engine block. Refer to the *SHOP MANUAL* for more details.
P0562	ECM	Battery voltage too low	Battery failure, rectifier failure, damaged circuit wires, battery terminal connection, damaged AC generator or damaged connectors.	Check fuses #6 (refer to *WIRING DIAGRAM*). Check ground continuity to the engine block. Refer to the *SHOP MANUAL* for more details.
P0563	ECM	Battery voltage too high	Battery failure, rectifier failure or battery terminal connection.	Check for regulator-rectifier failure. Refer to the *SHOP MANUAL* for more details.
P0564	CLUSTER	Cruise switch fault	The cruise switch is shorted or activated more than 60 seconds.	Verify the cruise switch if it is normally open and close when activated.
P0606	ECM	ECM ADC fault	Damaged ECM.	Replace ECM

PCODE	MODEL	DESCRIPTION	CAUSE	ACTION
P060D	ECM	TAS (Throttle Accelerator sensor) synchronization error	Damaged sensor, damaged circuit wires, damaged connector or damaged ECM pins.	Check system circuits B-E1, B-K1, B-K3, B-A3, B-B3, B-J3 Check for 0 volt on sensor connector pin BandE. Check for 5 volts on sensor connector pin AandD. Check for 0.5 to 3 volts on sensor connector pin Fand 0.25 to 1.5 on C Refer to the *SHOP MANUAL* for more details.
P060E	ECM	Throttle Actuator - Controller Fault-digital position control exceeds limit		
P0610	ECM	Variant coding fault		
P0629	CLUSTER	Fuel sensor disconnected fault	Damaged sensor, damaged circuit wires, damaged connector or damaged ECM output pins.	Check for 2.6 ohms (full tank) to 93.6 ohms (empty tank) between pin C and pin D at the fuel pump connector. Check system circuit at the gauge pin 19 and 20. (Refer to *WIRING DIAGRAM*)
P062C	ECM	Cluster CAN error - Loss of vehicle speed information from cluster	Cluster fault detected by ECM. C.A.N. circuit failure, Instrument cluster or ECM failure.	Check C.A.N. circuits wires. Replace instrument cluster. Verify outside of the building if the GPS LED becomes active after 1 minute and stays steady Refer to the *SHOP MANUAL* for more details.
P062F	ECM	ECM EEPROM fault - exchange ECM	Damaged ECM.	Replace ECM.
P06B6	ECM	ECM Fast ADC fault (knock detection line)		
P1030	ECM	Heater Power Stage fault for lambda sensor upstreams of catalyst - open line		
P1106	ECM	Altitude correction factor (fho) not plausible - out of range		

PCODE	MODEL	DESCRIPTION	CAUSE	ACTION
P1120	ECM	Throttle positions calculated from TPS 1 and TPS 2 not corresponding	Damaged throttle actuator, damaged circuit wires, damaged connector or damaged ECM.	Check system circuit, perform closed throttle with B.U.D.S. Replace throttle actuator, replace ECM.
P1130	ECM	Lambda Sensor fault upstreams of catalyst - open line		
P1171	ECM	Additive mixture adaptation exceeds upper limit –> mixture too lean		An open signal on the Engine coolant temperature (CTS) can trigger that fault
P1172	ECM	Additive mixture adaptation below lower limit –> mixture too rich		An open signal on the Engine coolant temperature (CTS) can trigger that fault
P1502	ECM	T.O.P.S. functional problem	Boat or sensor upside down, damaged circuit wires, damaged connector or damaged ECM output pins.	Check continuity for circuits A-C4, A-G1, A-F4. Refer to the *SHOP MANUAL* for more details.
P1503	ECM	T.O.P.S. switch short circuit to 12V	Boat or sensor upside down, damaged circuit wires, damaged connector or damaged ECM output pins.	Check continuity for circuits A-C4, A-G1, A-F4. Refer to the *SHOP MANUAL* for more details.
P1504	ECM	T.O.P.S. switch short circuit ground	Boat or sensor upside down, damaged circuit wires, damaged connector or damaged ECM output pins.	Check continuity for circuits A-C4, A-G1, A-F4. Refer to the *SHOP MANUAL* for more details.
P1505	ECM	T.O.P.S. switch fault non plausible state	Boat or sensor upside down, damaged circuit wires, damaged connector or damaged ECM output pins. Open circuit.	Check continuity for circuits A-C4, A-G1, A-F4. Refer to the *SHOP MANUAL* for more details.
P1506	ECM	T.O.P.S. switch open circuit	Boat or sensor upside down, damaged circuit wires, damaged connector or damaged ECM output pins. Open circuit.	Check continuity for circuits A-C4, A-G1, A-F4. Refer to the *SHOP MANUAL* for more details.
P1550	ECM	Otas sensor voltage not plausible	Damaged sensor, damaged circuit wires, damaged connector or damaged ECM. Open circuit.	Check continuity for circuits B-H3, B-H1 and FUSE #12. Refer to the *SHOP MANUAL* for more details.
P1606	ECM	ECM ADC fault - exchange ECM	Damaged ECM.	No service action available for fault P1606.

PCODE	MODEL	DESCRIPTION	CAUSE	ACTION
P160E	ECM	Throttle Actuator - Controller Fault - digital position control below limit	Damaged throttle actuator, damaged circuit wires, damaged connector or damaged ECM.	Check system circuit, perform closed throttle with B.U.D.S. Replace throttle actuator, replace ECM.
P1610	ECM	Throttle Actuator - Power Stage fault	Damaged throttle actuator, damaged circuit wires, damaged connector or damaged ECM.	Check system circuit, perform closed throttle with B.U.D.S. Replace throttle actuator, replace ECM.
P1611	ECM	Throttle Actuator - Power Stage fault	Damaged throttle actuator, damaged circuit wires, damaged connector or damaged ECM.	Check system circuit, perform closed throttle with B.U.D.S. Replace throttle actuator, replace ECM.
P1612	ECM	Throttle Actuator - Power Stage fault	Damaged throttle actuator, damaged circuit wires, damaged connector or damaged ECM.	Check system circuit, perform closed throttle with B.U.D.S. Replace throttle actuator, replace ECM.
P1613	ECM	Throttle Actuator - Power Stage fault	Damaged throttle actuator, damaged circuit wires, damaged connector or damaged ECM.	Check system circuit, perform closed throttle with B.U.D.S. Replace throttle actuator, replace ECM.
P1614	ECM	Throttle Actuator - Return-Spring check not passed/Spring does not close	Damaged throttle actuator, damaged circuit wires, damaged connector or damaged ECM.	Check system circuit, perform closed throttle with B.U.D.S. Replace throttle actuator, replace ECM.
P1615	ECM	Throttle Actuator - Position monitoring fault	Damaged throttle actuator, damaged circuit wires, damaged connector or damaged ECM.	Check system circuit, perform closed throttle with B.U.D.S. Replace throttle actuator, replace ECM.
P1616	ECM	Throttle Actuator - Default position check or learning fault	Damaged throttle actuator, damaged circuit wires, damaged connector or damaged ECM.	Check system circuit, perform closed throttle with B.U.D.S. Replace throttle actuator, replace ECM.
P1619	ECM	Throttle Actuator - Adaptation of upper mechanical limit failed	Damaged throttle actuator, damaged circuit wires, damaged connector or damaged ECM.	Check system circuit, perform closed throttle with B.U.D.S. Replace throttle actuator, replace ECM.
P1620	ECM	Throttle Actuator - Adaptation of lower mechanical limit failed	Damaged throttle actuator, damaged circuit wires, damaged connector or damaged ECM.	Check system circuit, perform closed throttle with B.U.D.S. Replace throttle actuator, replace ECM.
P1621	ECM	Throttle Actuator - Abortion of adaptation	Damaged throttle actuator, damaged circuit wires, damaged connector or damaged ECM.	Check system circuit, perform closed throttle with B.U.D.S. Replace throttle actuator, replace ECM.
P1622	ECM	Throttle Actuator - Repeated abortion of adaptation	Damaged throttle actuator, damaged circuit wires, damaged connector or damaged ECM.	Check system circuit, perform closed throttle with B.U.D.S. Replace throttle actuator, replace ECM.

PCODE	MODEL	DESCRIPTION	CAUSE	ACTION
P1654	ECM	Voltage of D.E.S.S. key switch out of range	Damaged D.E.S.S. key switch, damaged circuit wires, damaged connector or damaged ECM output pins.	Remove D.E.S.S. key and check system circuit B-B2. Refer to the *SHOP MANUAL* for more details.
P1657	ECM	Electrical fault of D.E.S.S. key communication line	Damaged D.E.S.S. key switch, damaged circuit wires, damaged connector or damaged ECM output pins.	Remove D.E.S.S. key and check system circuit B-B2. Refer to the *SHOP MANUAL* for more details.
P1658	ECM	Faulty D.E.S.S. key communication	Damaged D.E.S.S. key switch, damaged circuit wires, damaged connector or damaged ECM output pins.	Remove D.E.S.S. key and check system circuit B-B2. Refer to the *SHOP MANUAL* for more details.
P1661	ECM	iBR malfunction	iBR fault detected by ECM.	Remove D.E.S.S. key Perform an electrical system shut down. Clear fault.
P1662	ECM	iBR torque request is not plausible	iBR fault detected by ECM.	Perform iBR software update if available or replace iBR.
P1679	ECM	Main Relay Stinking	Permanent 12V is present on ECM pin B-M4.	ECU pin B-M4 is permanently supplied thru 15 amp fuse and it should be accessory 12 Vdc.
P16B6	ECM	ECU Fast ADC fault (knock detection line)		
P16B7	ECM	ECU Fast ADC fault (knock detection line)		
P16B8	ECM	ECU Fast ADC fault (knock detection line)		
P16C0	ECM	Fault of ECM ADC		
P16C1	ECM	Fault of ECM ADC		
P16C2	ECM	Fault of ECM monitoring module		
P16C3	ECM	Monitoring fault due to Accelerator Sensor check		
P16C4	ECM	Monitoring fault due to engine speed check		
P16C5	ECM	Safety fuel cut off activ - Monitoring level 1		

PCODE	MODEL	DESCRIPTION	CAUSE	ACTION
P16C6	ECM	Safety fuel cut off activ - Monitoring level 2		
P16C7	ECM	Monitoring fault due to throttle valve plausibility check	Damaged throttle actuator, damaged circuit wires, damaged connector or damaged ECM.	Check system circuit, perform closed throttle with B.U.D.S. Replace throttle actuator, replace ECM.
P16C8	ECM	Monitoring fault due to exceeding permitted throttle valve position	Damaged throttle actuator, damaged circuit wires, damaged connector or damaged ECM.	Check system circuit, perform closed throttle with B.U.D.S. Replace throttle actuator, replace ECM.
P16C9	ECM	Monitoring detected non plausible D.E.S.S. key state	Damaged D.E.S.S. key switch, damaged circuit wires, damaged connector or damaged ECM output pins.	Remove D.E.S.S. key and check system circuit B-B2. Refer to the *SHOP MANUAL* for more details.
P16CA	ECM	ECU detected faulty watch dog line ECU defect	Damaged ECM.	Replace ECM.
P16CB	ECM	ECU switch off through watch dog line (hardware fault) ECU defect	Damaged ECM.	Replace ECM.
P2080	ECM	Exhaust temperature not plausible	Damaged sensor, damaged circuit wires, damaged connector or damaged ECM output pins.	Check for approximately 2280 to 2736 ohms at temperature of 19 to 21°C (66 to 70°F) between system circuits A-H4 and A-J4. Refer to the *SHOP MANUAL* for more details.
P2081	ECM	Exhaust temperature sensor fault	Intremittent connection. Damaged sensor, damaged circuit wires, damaged connector or damaged ECM output pins.	Check for approximately 2280 to 2736 ohms at temperature of 19 to 21°C (66 to 70°F) between system circuits A-H4 and A-J4. Refer to the *SHOP MANUAL* for more details.
P212C	ECM	Electrical lower-range violation TPS 2	Damaged throttle actuator, damaged circuit wires, damaged connector or damaged ECM.	Check system circuit, perform closed throttle with B.U.D.S. Replace throttle actuator, replace ECM
P212D	ECM	Electrical upper-range violation TPS 2	Damaged throttle actuator, damaged circuit wires, damaged connector or damaged ECM.	Check system circuit, perform closed throttle with B.U.D.S. Replace throttle actuator, replace ECM
P2159	ECM	TAS (Throttle Accelerator sensor) signal not plausible		

PCODE	MODEL	DESCRIPTION	CAUSE	ACTION
P2279	ECM	Air intake manifold leak downstream of throttle		
P2428	ECM	High exhaust temperature detected	Exhaust overheat, damaged sensor or damaged circuit wires.	Check cooling system for blockage. Check if the exhaust injection valve is properly calibrated. Refer to the *SHOP MANUAL* for more details.
P2620	ECM	TPS value not plausible	Damaged throttle actuator, damaged circuit wires, damaged connector or damaged ECM.	Check system circuit, perform closed throttle with B.U.D.S. Replace throttle actuator, replace ECM
P2621	ECM	Electrical lower-range violation TPS 1	Damaged throttle actuator, damaged circuit wires, damaged connector or damaged ECM.	Check system circuit, perform closed throttle with B.U.D.S. Replace throttle actuator, replace ECM
P2622	ECM	Electrical upper-range violation TPS 1	Damaged throttle actuator, damaged circuit wires, damaged connector or damaged ECM.	Check system circuit, perform closed throttle with B.U.D.S. Replace throttle actuator, replace ECM
U0129	ECM	CAN communication error between ECM and iBR module	iBR fault detected by ECM. C.A.N. circuit failure, iBR or ECM failure. Disconnected connector.	Check C.A.N. circuits wires. Replace iBR. Refer to the *SHOP MANUAL* for more details.
U0129	IS	IBR CAN messages time out or validity	Warning only: the iS module lost communication with the iBR.	If fault ACTIVE, verify CAN connection between iBR and iS
U0300	ECM	Exchange security - Wrong ECM	Incorrect ECM or cluster for engine.	Install proper recommended ECM or cluster for vehicle.
U0401	IBR	ECM CAN messages time out or validity	C.A.N. circuit failure, ECM software failure.	Check C.A.N. circuits wires. Replace ECM. Refer to the *SHOP MANUAL* for more details.
U0401	IS	ECM CAN messages time out or validity	Warning only: the iS module lost communication with the engine ECU.	If fault ACTIVE, verify CAN connection between ECM and iS
U0457	IS	Cluster CAN messages time out or validity	Warning only: the iS module lost communication with the cluster.	If fault ACTIVE, verify CAN connection between cluster and iS
U0457	IBR	Cluster CAN messages time out or validity	C.A.N. circuit failure, cluster software failure.	Check C.A.N. circuits wires. Replace instrument cluster. Refer to the *SHOP MANUAL* for more details.
U16A1	ECM	Cluster CAN Time out error-Missing CAN ID 514h	Cluster fault detected by ECM. C.A.N. circuit failure, Instrument cluster or ECM failure.	Check C.A.N. circuits wires. Replace instrument cluster. Refer to the *SHOP MANUAL* for more details.

PCODE	MODEL	DESCRIPTION	CAUSE	ACTION
U16A2	ECM	Cluster CAN Time out error-Missing CAN ID 230h	Cluster fault detected by ECM. C.A.N. circuit failure, Instrument cluster or ECM failure.	Check C.A.N. circuits wires. Replace instrument cluster. Refer to the *SHOP MANUAL* for more details.
U16A3	ECM	Cluster CAN Time out error-Missing CAN ID 408h	Cluster fault detected by ECM. C.A.N. circuit failure, Instrument cluster or ECM failure.	Check C.A.N. circuits wires. Replace instrument cluster. Refer to the *SHOP MANUAL* for more details.
U16A4	ECM	iBR CAN Time out error-Missing CAN ID 010h	iBR fault detected by ECM. C.A.N. circuit failure, iBR or ECM failure. Disconnected connector.	Check C.A.N. circuits wires. Replace iBR. Refer to the *SHOP MANUAL* for more details.
U16A5	ECM	iBR CAN Time out error-Missing CAN ID 012h	iBR fault detected by ECM. C.A.N. circuit failure, iBR or ECM failure. Disconnected connector.	Check C.A.N. circuits wires. Replace instrument iBR. Refer to the *SHOP MANUAL* for more details.
U16A6	ECM	Cluster check sum error - CAN ID230h	Cluster fault detected by ECM. C.A.N. circuit failure, Instrument cluster or ECM failure.	Check C.A.N. circuits wires. Replace instrument cluster. Refer to the *SHOP MANUAL* for more details.
U16A7	ECM	Cluster check sum error - CAN ID408h	Cluster fault detected by ECM. C.A.N. circuit failure, Instrument cluster or ECM failure.	Check C.A.N. circuits wires. Replace instrument cluster. Refer to the *SHOP MANUAL* for more details.
U16A8	ECM	iBR check sum error - CAN ID010h	iBR fault detected by ECM. C.A.N. circuit failure, ECM software failure.	Check C.A.N. circuits wires. Replace iBR. Refer to the *SHOP MANUAL* for more details.
U16A9	ECM	iBR check sum error - CAN ID012h	iBR fault detected by ECM. C.A.N. circuit failure, ECM software failure.	Check C.A.N. circuits wires. Replace iBR. Refer to the *SHOP MANUAL* for more details.
U16AA	ECM	Cluster CAN Time out error-Missing CAN ID 410h		
U16AB	ECM	Cluster check sum error - CAN ID410h		

INTELLIGENT THROTTLE CONTROL (iTC)

SERVICE TOOLS

Description	Part Number	Page
DIAGNOSTIC HARNESS	529 036 188	257
FLUKE 115 MULTIMETER	529 035 868	257, 261, 263

SERVICE PRODUCTS

Description	Part Number	Page
DIELECTRIC GREASE	293 550 004	262

GENERAL

SYSTEM DESCRIPTION

NOTE: Some functions or features described in this section may not apply to every PWC model, or may be available as an option.

The iTC is an electronic throttle control system that includes a cableless throttle control located on the RH side of handlebar, an electric throttle actuator (ETA) located on the throttle body and the engine control module (ECM). The iTC is often referred to as a "throttle by wire" system.

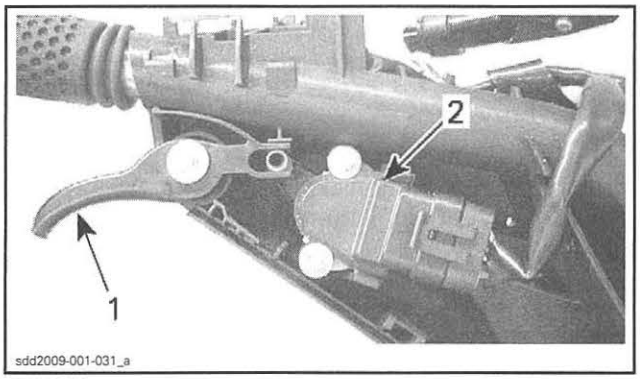

TYPICAL
1. *Throttle lever*
2. *Throttle accelerator sensor (TAS)*

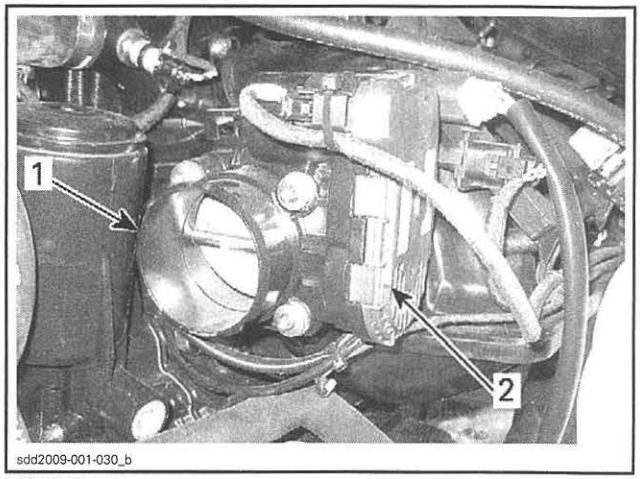

TYPICAL
1. *Throttle body*
2. *Throttle actuator*

The throttle lever operates the throttle accelerator sensor (TAS). It is a double output hall effect sensor. The redundancy is used for security purposes.

The throttle actuator (ETA) is a DC motor on the throttle body that regulates the throttle plate via a drive gear. Pulse width modulation (PWM) is used to control the motor. In the throttle body, there is a double throttle position sensor (TPS). The redundancy is used for security purposes. The TPS is a potentiometer that supplies the ECM the actual angle position of the throttle plate.

According to the torque demand from the TAS, the ECM powers the ETA motor to rotate towards open or close the throttle plate. When the ECM detects through the TPS that the throttle plate has reached the targeted opening, the ECM stops the throttle actuator.

The iTC allows the throttle actuator to be moved irrespective of the accelerator sensor position since it is not directly linked by a throttle cable.

While the throttle lever might be fully pulled in and held, the ECM could close the throttle plate instead of opening it if the iBR lever were pulled in. Then, the ECM could open the throttle plate to accelerate the engine to increase the braking effect. These different throttle plate movements could be achieved while the throttle lever was still fully pulled in. This is one of the great flexibility of the iTC.

The use of the iTC allows the following additional engine modes of operation.

Touring Mode

Touring mode allows the operator to choose for progressive throttle response at certain engine speed.

Available engine power and acceleration is reduced when accelerating from a complete stop and when operating in the low engine power range under certain conditions.

When throttle is applied, the engine will progressively accelerate to an operating range whereby full power eventually becomes available. If the engine is throttled down sufficiently and for a long enough period of time, engine power and acceleration will again be reduced.

Sport Mode

Sport mode allows the operator for instant throttle response.

Maximum engine power is available throughout the engine operational range.

ECO Mode

When ECO mode is selected (fuel economy mode), engine RPM is limited whereby an optimal cruising speed is maintained in order to reduce fuel consumption.

Cruise Control

Cruise mode is a function of iTC (intelligent Throttle Control) system that allows the operator to set the desired maximum watercraft speed.

This is useful when cruising for long distances, operating in limited speed zones, or towing a tuber, skier or wake boarder.

Cruise mode only limits forward speed, the operator must keep the throttle depressed to maintain forward speed.

Once the maximum cruise speed is set, the operator can vary the watercraft speed from idle speed up to the set cruise speed using the throttle lever. The set cruise speed will not be exceeded even if the throttle lever is fully depressed.

As you proceed under a constant cruising speed setting, keep your attention level up to maintain good situational awareness.

Slowing down is a matter of releasing the throttle lever further than the set point, or by pulling the iBR lever in or decrease speed with the DOWN button.

If the iBR lever is pulled in for braking, CRUISE mode is overridden but **not deactivated**.

Once the iBR lever is released and the throttle is pulled in to engage forward position, the cruise function will reengage to limit the watercraft speed as it was set before iBR lever activation.

Slow Speed Mode

The Intelligent Throttle Control also allows for a Slow Speed Mode where the driver can adjust and set idle speed. This is useful when operating in slow speed zones where the driver must be especially attentive to possible obstacle avoidance.

The throttle plate will open and close as necessary to maintain the set speed.

Ski Mode

Ski mode allows for repeated and precisely controlled launches and a set towing speed, designed specifically for towing a skier or wake boarder.

RAMP Function

The RAMP function available in ski mode is a preprogrammed function used for launching and accelerating the PWC when towing a skier or wakeboarder.

TARGET SPEED Function

The TARGET SPEED function limits the maximum towing speed.

Learning and Rental Keys

Learning and Rental keys limit the watercraft maximum speed. The full stroke of the throttle lever is used while only a partial stroke of the throttle plate is achieved. Therefore, greater throttle lever movement is used while a smaller engine speed and torque variation is applied through the throttle actuator. This permits a more accurate and easier throttle operation to control the engine within a specified torque curve and maximum speed setting for a learner.

O.T.A.S. ™ System (Off-Throttle Assisted Steering)

The O.T.A.S. (Off-Throttle Assisted Steering) system provides additional maneuverability in off-throttle situations. The O.T.A.S. system is electronically activated and slightly increases engine speed under a pre-defined RPM when the driver initiates a full turn. When the handlebar is brought back to its center position, the throttle reverts to idle.

The throttle plate will open and close as necessary to assist the steering.

Limitations

The O.T.A.S. system cannot help maintaining control or prevent collisions in all situations.

OPERATING MODES

	GTS	GTI	GTI SE	GTI LIMITED	GTR	WAKE	RXP-X
Touring mode	X	X	X	X	X	X	N.A.
Sport mode	X	X	X	X	X	X	X
ECO mode	X	X	X	X	X	X	X
Cruise mode	N.A.	Opt	Opt	X	Opt	X	N.A.
Slow speed mode	N.A.	Opt	Opt	X	Opt	X	N.A.
Ski mode	N.A.	Opt	Opt	Opt	Opt	X	N.A.
Learning key modes	X	X	X	X	X	X	X

X = Indicates a **standard** feature
Opt = Indicates a feature available as an **option**
N.A. = Not Applicable

Touring Mode

By default, the watercraft is set to TOURING mode of operation when started.

A TOURING mode indicator is ON in the multifunction gauge to confirm the active mode of operation.



TOURING MODE INDICATOR (ALL MODELS EXCEPT RXT-X/RXT-X aS)

Sport Mode

When selected, SPORT MODE provides for instant throttle response and more rapid accelerations than TOURING MODE.

NOTE: Sport mode is not available if using a LEARNING key.

Once activated, SPORT MODE will remain active until it is deactivated by the operator, or the engine is shut down whereby it defaults back to TOURING MODE.

Activating Sport Mode

To quickly activate sport mode while riding at speed, carry out the following:

⚠ WARNING

When activating sport mode, be sure to maintain situational awareness of other watercrafts, obstacles, or persons in the water.

1. Depress and hold the SPORT button for at least 1 seconds.

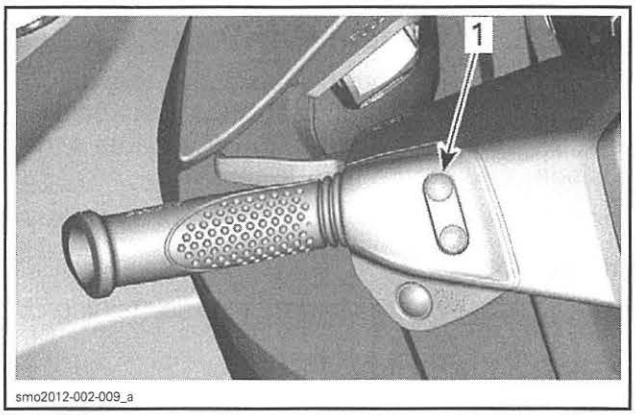

TYPICAL
1. Sport button

The following message will be displayed:



MESSAGE DISPLAYED
ENTERING SPORT MODE - INCREASED ACCELERATION - INSTRUCT PASSENGERS TO HOLD - PRESS_SPORT_BUTTON

⚠ WARNING

Ensure passengers are advised that sport mode provides for increased accelerations and that they are to hold on tightly.

2. Press the SET button again to activate sport mode.

A scrolling SPORT MODE ACTIVATED message will momentarily confirm that sport mode has been activated.



MESSAGE DISPLAYED
SPORT MODE ACTIVATED

NOTE: After a few seconds, the gauge will revert to its normal display.

3. Ensure the SPORT mode indicator is turned on.



SPORT MODE INDICATOR (ALL MODELS EXCEPT RXT-X)

NOTE: The SPORT mode indicator will come on and stay on as long as sport mode is active.

There is no SPORT mode indicator in the multifunction display, but only a SPORT MODE indicator light in the tachometer.

Deactivating Sport Mode

To quickly deactivate sport mode while riding at speed, carry out the following:

⚠ WARNING

When deactivating sport mode, be sure to maintain situational awareness of other watercrafts, obstacles, or persons in the water.

1. Depress and hold the SPORT button for at least 1 seconds.

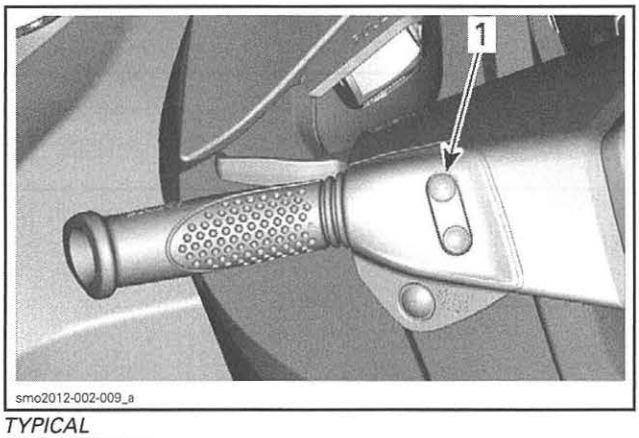

TYPICAL
1. Sport button

NOTE: The following message will scroll in the multifunction display: SPORT MODE DEACTIVATED.

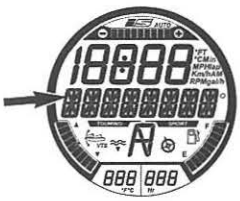

MESSAGE DISPLAYED
SPORT MODE DEACTIVATED

NOTE: After a few seconds, the gauge will revert to its normal display.

2. Ensure the TOURING mode indicator is on.



TOURING MODE INDICATOR (ALL MODELS EXCEPT RXT-X/RXT-X aS)

ECO Mode (Fuel Economy Mode)

How to Activate ECO Mode

1. Depress the ECO button for at least 1 seconds.

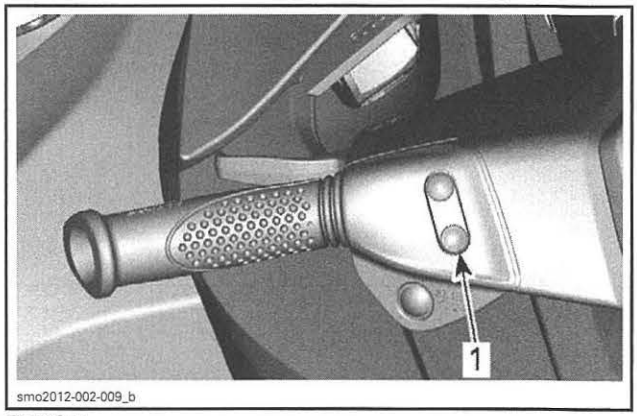

TYPICAL
1. ECO button

The following message will be displayed on the multifunction display:

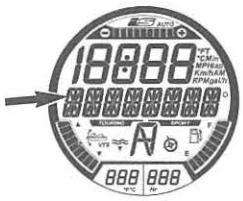

MESSAGE DISPLAYED
ECO MODE

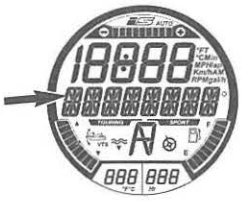

MESSAGE DISPLAYED
FUEL ECONOMY MODE - HOLD SET TO ACTIVATE OR MODE TO EXIT

The ECO mode indicator will also be activated.

How to Deactivate ECO Mode

1. Depress the ECO button for at least 1 seconds.

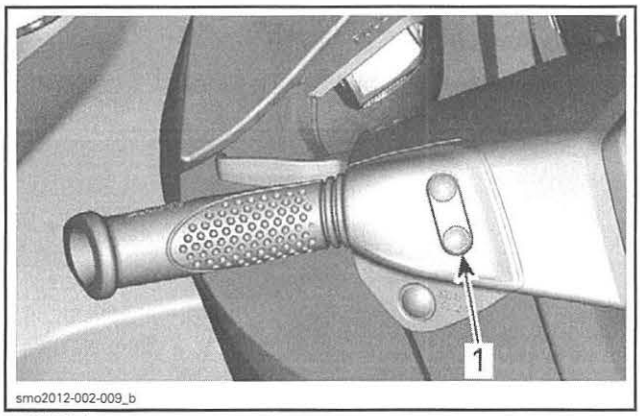

TYPICAL
1. ECO button

The ECO mode indicator will be deactivated.

Cruise Mode

GTS/GTI Series, GTR and WAKE

Cruise Mode Activation at Idle Speed

NOTE: This function is available up to approximately 10 km/h (6 MPH).

To activate and preset CRUISE MODE at idle speed, carry out the following:

1. Tap the throttle lever to move the iBR to the forward position.
2. Press and hold the cruise button.

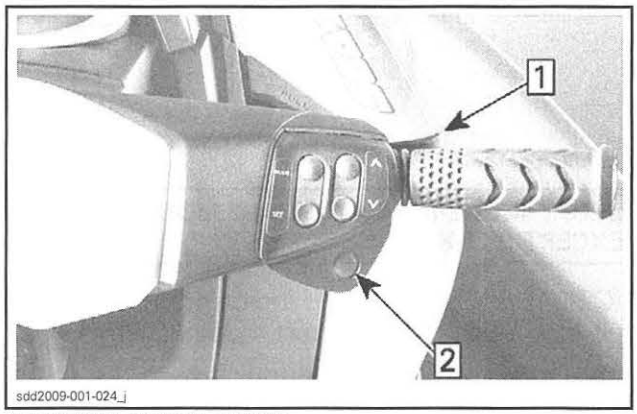

ENGAGING CRUISE AT IDLE
Step 1: Tap throttle to engage FORWARD
Step 2: Press cruise button

The following message will appear in the multifunction display.

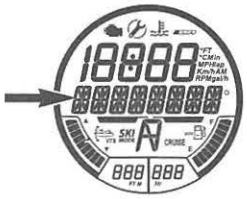

MESSAGE DISPLAYED
CRUISE MODE _ SELECT SPEED _ PRESS SET TO ACCEPT OR MODE TO EXIT

3. Press the UP button until the desired cruise speed is indicated in the numerical display.

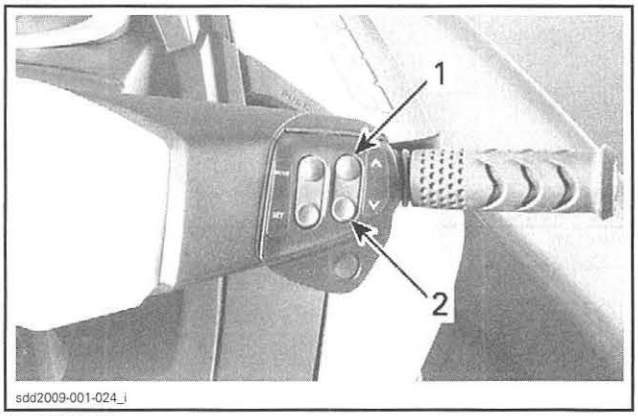

1. UP button
2. DOWN button

The following will be displayed in the multifunction gauge.



FUNCTION SELECTED - CRUISE MODE

1. CRUISE MODE _ SPEED ADJUSTING
2. Cruise speed set point indication

4. Press the SET button to save the cruise speed selected and engage cruise mode. The following scrolling message will appear in the multifunction display.

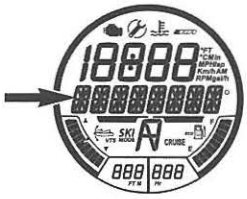

MESSAGE DISPLAYED

CRUISE MODE ACTIVE

A beep indicating that you are now in cruise mode will sound, and a CRUISE indicator will come on in the multifunction gauge.

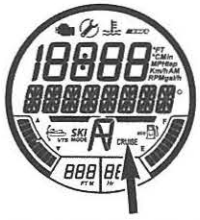

CRUISE MODE INDICATOR

Cruise Mode Activation Above Idle Speed

To activate cruise mode above idle speed (10 km/h (6 MPH)):

1. Accelerate to the desired watercraft speed and hold throttle lever steady.
2. Press and hold the cruise button for approximately 1 second.

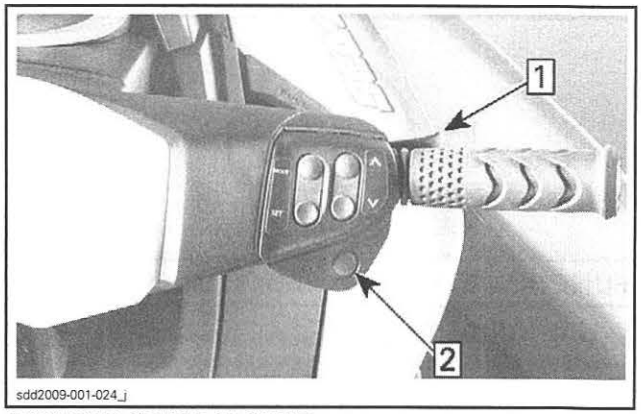

ENGAGING CRUISE AT SPEED
Step 1: Accelerate to desired speed and hold throttle steady
Step 2: Press cruise button

A beep indicating that you are now in cruise mode will sound, and a CRUISE indicator will come on in the multifunction gauge.

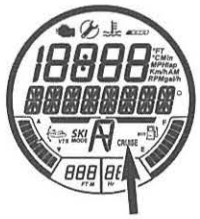

CRUISE MODE INDICATOR

Changing Set Cruise Speed

To **increase** or **decrease** the set cruise speed:

1. Hold the throttle lever all the way in to the handlebar.
2. On the RH handlebar, press UP/DOWN button.

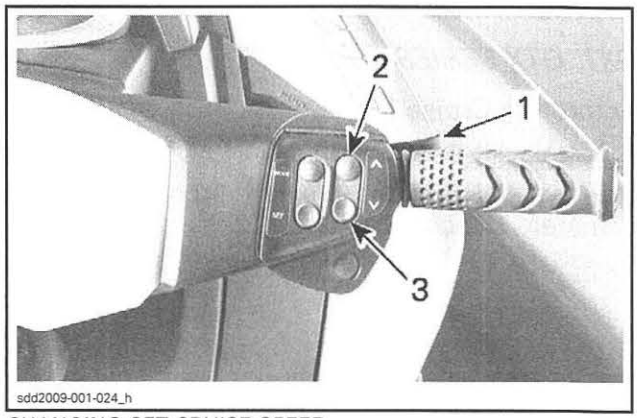

CHANGING SET CRUISE SPEED
1. Throttle lever
2. UP button
3. DOWN button

While the UP/Down is being pressed to change the speed setting, the following will appear in the multifunction gauge.



FUNCTION SELECTED - CRUISE MODE

1. CRUISE MODE _ SPEED ADJUSTING
2. Cruise speed set point indication

NOTE: Pressing the UP/DOWN button repeatedly will change the cruise set speed in single increments. Pressing and holding the button will increase or decrease the speed until the button is released.

Deactivating Cruise Mode

To deactivate cruise mode:

1. Release the throttle lever.
2. Press the cruise button.

Deactivation of cruise mode is indicated by:

– The CRUISE indicator will turn off.
– A BEEP will be heard.

NOTE: If the throttle lever is not fully released when the cruise button is pressed to deactivate cruise mode, the BEEP will not be heard and the cruise indicator will remain on. The speed limiting function of cruise mode will stay active until the throttle is fully released, then the BEEP will be heard and the cruise indicator will go out.

Cruise Mode

RXT, GTX SERIES and WAKE PRO

Activating Cruise Mode

1. Maintain a constant speed.
2. Press and hold the cruise button for approximately 1 second.

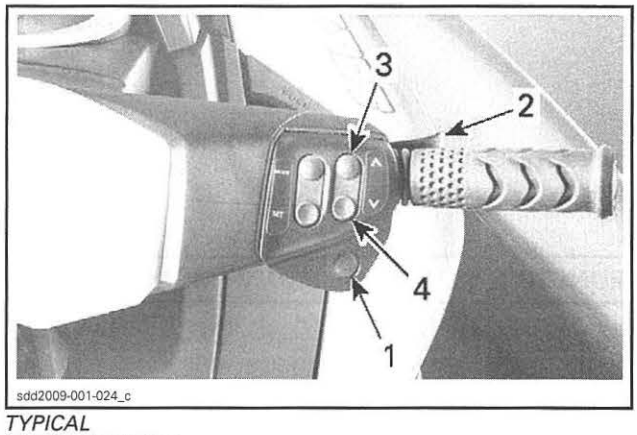

TYPICAL
1. CRUISE button
2. Throttle lever
3. UP button
4. DOWN button

You will hear a beep indicating that you are now in cruise mode, and a green CRUISE indicator light will be lit.

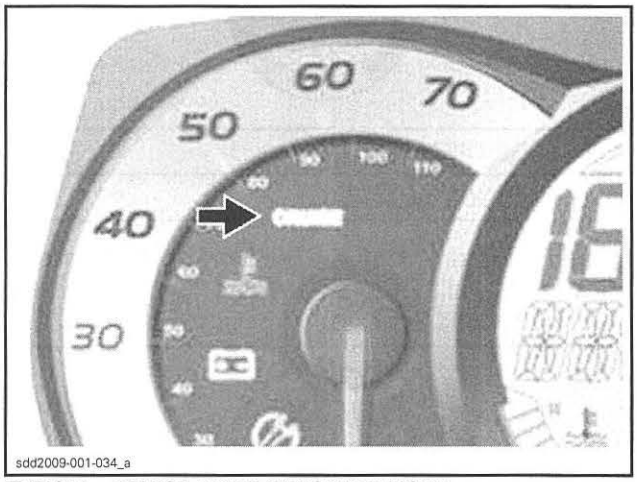

TYPICAL - CRUISE MODE INDICATOR LIGHT

NOTE: Activating cruise mode of operation only limits the maximum speed available when depressing the throttle lever. The throttle lever must be held in to maintain forward speed. Watercraft speed can be varied from idle up to the set cruise speed using the throttle lever once the cruise function is activated. Watercraft speed may vary depending on water conditions during use.

Cruise Mode Activation at Idle Speed

NOTE: This function is available up to approximately 10 km/h (6 MPH).

To activate and preset CRUISE MODE at idle speed in forward thrust:

1. Press and hold the cruise button until the following message appears in the multifunction display.

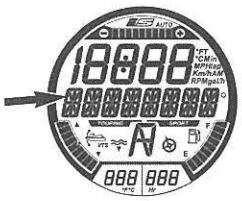

MESSAGE DISPLAYED
CRUISE MODE _ SELECT SPEED _ PRESS SET TO ACCEPT OR MODE TO EXIT

2. Press the UP button until the desired cruise speed is indicated in the numerical display. The following message will scroll in the multifunction display.

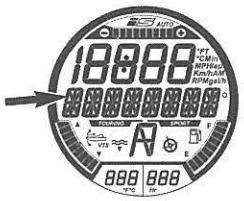

MESSAGE DISPLAYED
CRUISE MODE _ SPEED ADJUSTING

3. Press the SET button to save the cruise speed selected and engage cruise speed function. The following message will scroll in the multifunction display.

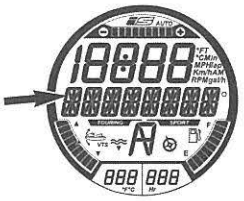

MESSAGE DISPLAYED
CRUISE MODE ACTIVE

Changing Set Cruise Speed

To **increase** or **decrease** the set cruise speed:

1. Keep throttle lever fully depressed.
2. Press the UP/DOWN button.

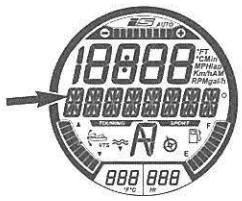

MESSAGE DISPLAYED
CRUISE MODE _ SPEED ADJUSTING

3. Press the UP/DOWN button to adjust speed accordingly.

Deactivating Cruise Mode

To deactivate cruise mode:

1. Release the throttle lever.
2. Press the cruise button.

Deactivation of cruise mode is indicated by:

- The CRUISE indicator light in the speedometer display will go off.
- A BEEP will be heard.

NOTE: If the throttle lever is not fully released when the cruise button is pressed to deactivate cruise mode, the BEEP will not be heard and the cruise light will remain on. The speed limiting function of cruise mode will stay active until the throttle is fully released, then the BEEP will be heard and the cruise light will go out.

Slow Speed Mode

The Intelligent Throttle Control also allows for a Slow Speed Mode where the driver can adjust and set idle speed. This is usefull when operating in slow speed zones where the driver must be especially attentive to possible obstacle avoidance.

The operator can set idle speed between 1.6 km/h to 11 km/h (1 MPH to 7 MPH).

If you accelerate above approximately 14 km/h (9 MPH) , Slow Speed Mode will be deactivated and the engine will return to idle RPM when the throttle is released.

Should a situation arise where the operator must stop or accelerate quickly away from a hazardous situation, pulling in the iBR lever, or pulling in on the throttle lever will deactivate slow speed mode and normal control of the watercraft will be returned to the operator.

Activating Slow Speed Mode

To activate slow speed mode of operation:

1. Release the throttle lever to idle RPM.

2. Pull in and release the iBR lever to engage neutral.
3. Press and hold the cruise button for approximately 1 second.

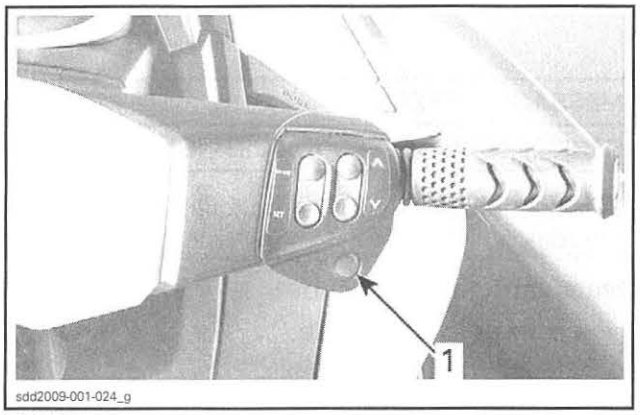

TYPICAL
1. CRUISE button

The CRUISE indicator will come on in the speedometer or multifunction display to indicate cruise activation.

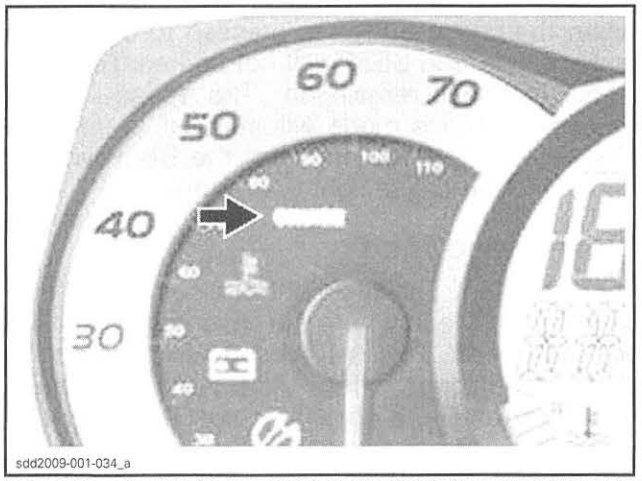

TYPICAL - CRUISE MODE INDICATOR LIGHTIN SPEEDOMETER

A message will scroll in the multifunction display to specify that you are now in slow speed mode.



MESSAGE DISPLAYED
SLOW SPEED MODE _ SPEED ADJUSTING

The default slow speed setting of 1 will also come on for a few seconds in the numerical display.



SLOW SPEED MODE INDICATION
1. SLOW SPEED MODE ACTIVATED message 2. Slow speed setting is displayed here for a few seconds

NOTE: The scrolling SLOW SPEED MODE message repeats itself as long as slow speed mode is activated. The numerical display reverts back to the previous indication after a few seconds.



SLOW SPEED MODE INDICATION
1. SLOW SPEED MODE message 2. Numerical display reverts to previous indication

Changing Set Slow Speed

To **increase** or **decrease** the set slow speed, press the UP/DOWN button on the RH handlebar once, or repeatedly.



MESSAGE DISPLAYED
SLOW SPEED MODE _ SPEED ADJUSTING

The setting point indication in the digital screen will come back on to indicate the slow speed setting change.



SLOW SPEED MODE INDICATION

1. SLOW SPEED MODE message
2. Numerical display reverts to previous indication

The displays will revert back to their previous indication a few seconds after the last activation of the UP or DOWN button.

NOTE: There are 5 slow speed settings available (1 through 5). Adjust slow speed mode to desired speed.

The following message will scroll across the multifunction display periodically as a reminder.



MESSAGE DISPLAYED
SLOW SPEED MODE ACTIVE

The displays will revert back to their previous indication a few seconds after the last activation of the UP or DOWN button.

Deactivating Slow Speed Mode

The slow speed mode can be deactivated using any of the following methods:

- Pressing the cruise button.
- Depressing the iBR lever.
- Accelerating past the set slow speed.

When deactivating SLOW SPEED MODE by pressing the cruise button, or accelerating using the throttle lever, the iBR gate stays in the forward position.

When using the iBR lever, the iBR gate will move towards the reverse position, then neutral when the lever is released.

SLOW SPEED MODE deactivation will be indicated in the following manner:

- The CRUISE indicator will go out.
- The scrolling SLOW SPEED MODE ACTIVE message will cease.

Ski Mode

Ski mode allows for repeated and precisely controlled launches, and a set towing speed, specifically for towing a skier or wake boarder.

Ski mode is not available if using a LEARNING key.

RAMP Function

The RAMP function offers a pre-programmed setting for launching and accelerating the PWC.

RAMP 1 provides:

- Slowest launch (smoothest)
- Slowest acceleration rate
- Slowest TARGET SPEED range.

RAMP 5 provides:

- Quickest launch
- Quickest acceleration rate
- Highest TARGET SPEED range.

TARGET SPEED Function

The TARGET SPEED function limits the maximum towing speed.

Once the RAMP has been selected, an average PWC target speed for that RAMP will be visible in the numerical display.

The average speed displayed and the speed range available is dependent on the RAMP selected. The higher the RAMP number, the higher the speed range.

The operator may increase or decrease the target speed to any value within the selected RAMP speed range.

NOTE: If the desired target speed cannot be set in the selected RAMP, you must exit then reengage SKI MODE, and select a different RAMP.

Engaging and Using Ski Mode

To engage ski mode, carry out the following steps:

1. Release throttle lever.

NOTE: Ski mode cannot be engaged if the throttle lever is not fully released, and if CRUISE or SLOW SPEED mode is engaged. A message will appear in the multifunction display advising you of the situation. Follow the instructions in the display.

2. Press the MODE button repeatedly until SKI MODE is visible in the multifunction display.

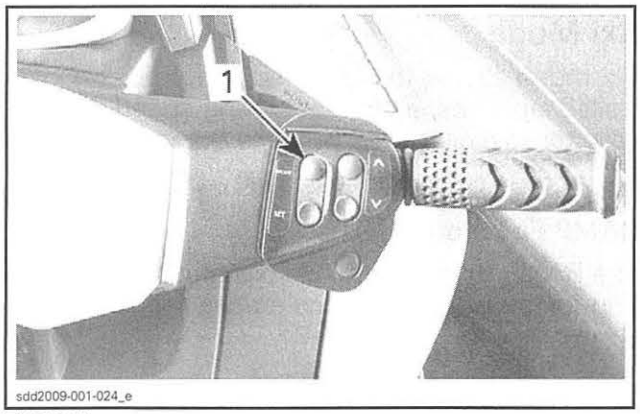

TYPICAL
1. MODE button

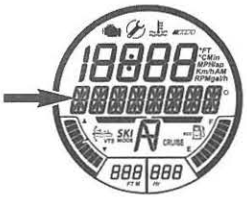

MESSAGE DISPLAYED
SKI MODE

3. Press SET to enter the function. The multifunction gauge message will change to RAMP. The RAMP setting number will be visible in the numerical display.

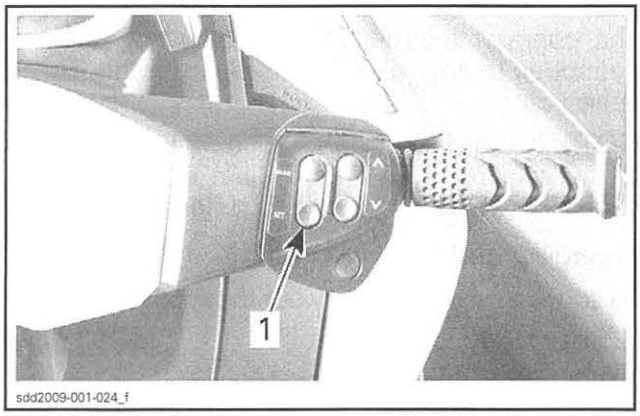

1. SET button



FIRST SETTING AVAILABLE - RAMP
1. RAMP message 2. Ramp setting

4. To change the RAMP setting, press the UP/DOWN button until the desired ramp number is visible in the numerical display.
5. Press SET to lock in the ramp setting; the multifunction display will change to the TARGET SPEED setting function.



SECOND SETTING AVAILABLE - TARGET SPEED
1. TARGET SPEED message 2. Target speed setting

6. Press the UP/DOWN button to increase or decrease the target speed.
7. Press SET to lock in the target speed; the display will switch to the following scrolling message.

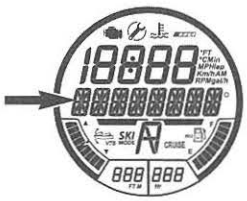

MESSAGE DISPLAYED
SKI MODE_PRESS_SET_TO START OR MODE TO EXIT

NOTE: A BEEP will be heard every 5 seconds as a SKI MODE engaged reminder.

8. Press SET again; the following confirmation message will appear.

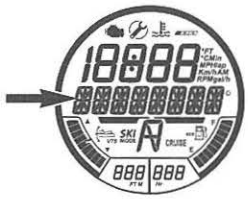

MESSAGE DISPLAYED
SKI MODE ACTIVE_PRESS_MODE_AND RETURN TO IDLE TO CANCEL

NOTE: The SKI MODE indicator will also come ON and blink when ski mode becomes active. It will be ON steady when the operator pulls and holds the throttle lever all the way in to the handlebar.



SKI MODE INDICATOR

9. To launch the PWC in ski mode, pull in and hold the throttle lever all the way to the handlebar grip. The PWC will accelerate to the set TARGET SPEED and the SKI MODE indicator will be on steady.
10. To increase or decrease the TARGET SPEED during a ski run, press the UP/DOWN button, **do not** release the throttle lever.

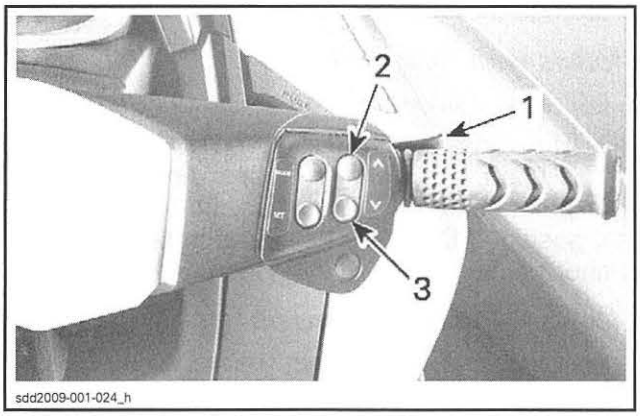

1. Hold throttle lever in
2. Press UP button to increase speed
3. Press DOWN button to decrease speed

NOTE: If the throttle is partly released during a ski run, the SKI MODE indicator light will start to blink and the speed adjust function using the UP/DOWN arrow button will be deactivated.

11. To end a ski run or to pick up a fallen skier or wakeboarder, fully release the throttle to regain normal throttle control.

NOTE: When the throttle is fully released during ski mode operation, the system returns to ski mode engaged status. The SKI MODE indicator light will go out but, ski mode will remain engaged and a message to that effect will reappear in the multifunction display.

12. Press SET to reactivate ski mode and fully pull in the throttle lever to start another ski run.

Deactivating Ski Mode

To exit ski mode at any given point during the ski mode setting process, press the MODE button.

To end a ski run and completely deactivate ski mode, release the throttle to idle, then press the MODE button.

Learning Key Mode

There are 5 speed settings available.

By default, the speed setting is no 3.

Changing Learning Key Speed Settings

NOTE: Changing key settings is only available when the engine is not running.

To change learning key settings, carry out the following:

1. Press the START/STOP button to wake up the electrical system and install the NORMAL key on the engine cut-off switch.
2. Wait for the information center to complete its self-test and display the key recognition message.
3. Press the MODE button repeatedly until KEY MODE is visible in the digital screen of the information center.

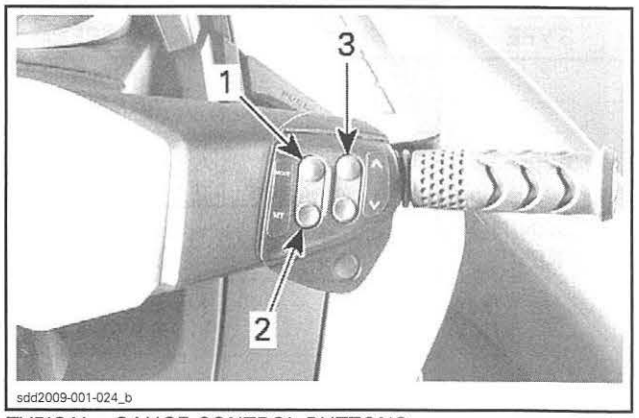

TYPICAL - GAUGE CONTROL BUTTONS
1. MODE button
2. SET button
3. UPDOWN button



MESSAGE DISPLAYED

KEY MODE

4. Press the SET button once to enable learning key mode setting function. The display will change to L-Key.



FUNCTION SELECTED - LEARNING KEY

1. L-KEY message
2. Learning key setting

5. Press the UP or DOWN button to toggle the key setting between 1 and 5. See table for speed limitations according to setting.
6. Press the SET button once to save the setting, twice to exit the function, or simply wait for the function to time-out. The change in key setting will automatically be saved.

NOTE: The key speed setting is applicable to any key of the same type used on a specific watercraft. The same key type used on a different watercraft may therefore have a different key speed setting.

D.E.S.S. KEY TYPE	KEY SPEED SETTING	APPROX. MAX. SPEED
LEARNING KEY	5	80 km/h (50 MPH)
	4	74 km/h (46 MPH)
	3	68 km/h (42 MPH)
	2	60 km/h (37 MPH)
	1	51 km/h (32 MPH)

PROCEDURES

THROTTLE ACCELERATOR SENSOR (TAS)

General

The throttle accelerator sensor (TAS) is a double hall effect sensor that sends a signal to the ECM which is proportional to the throttle lever angle.

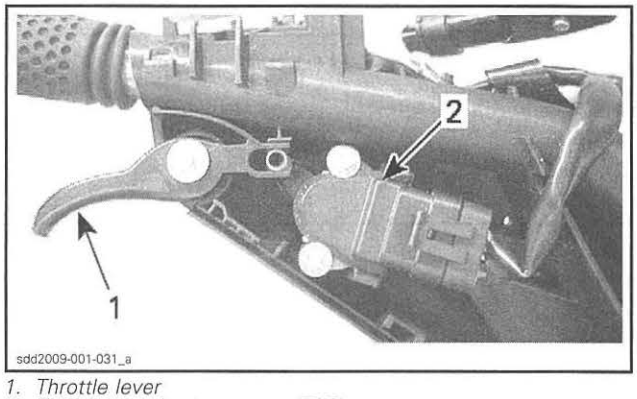

1. Throttle lever
2. Throttle accelerator sensor (TAS)

First ensure the throttle lever functions adequately. Pull the throttle lever fully in towards the handlebar, then release it. It must reach the wide open position and return to the idle position freely when released. Otherwise, refer to *STEERING SYSTEM* for an inspection.

TAS Voltage Test

Check the voltage of the throttle accelerator sensor as follows.

1. Open the front storage cover and remove the storage bin.

Models with Suspension

2. Lift suspension using the gauge to gain access.

NOTE: If more height is required or if the iS cannot be used, manually lift suspension by the anchor points close to handlebar and safely lock in this position. Do not lift the watercraft from the anchor points.

Models Without Suspension

3. As applicable, disconnect the top of the 2 front air ventilation hoses for ease of access to steering connector. Refer to *BODY* subsection.
4. As applicable, remove vertical panel in front storage compartment.

All Models

5. Reach in under the steering support and disconnect the 24-pin steering connector.

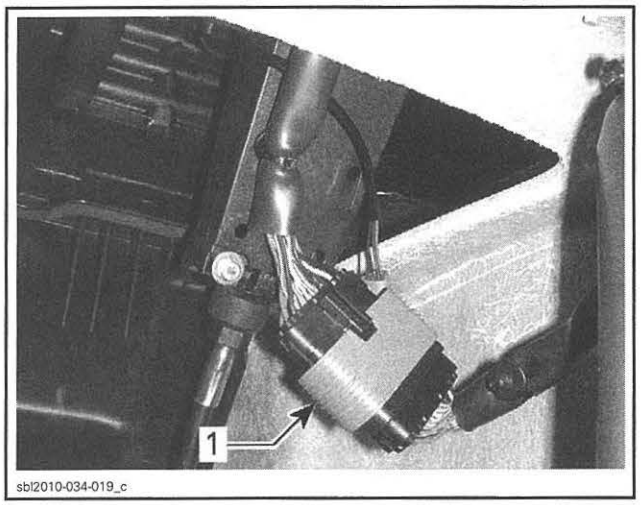

1. 24-pin connector

6. Connect the DIAGNOSTIC HARNESS (P/N 529 036 188) to make an in-line connection between the disconnected connectors.

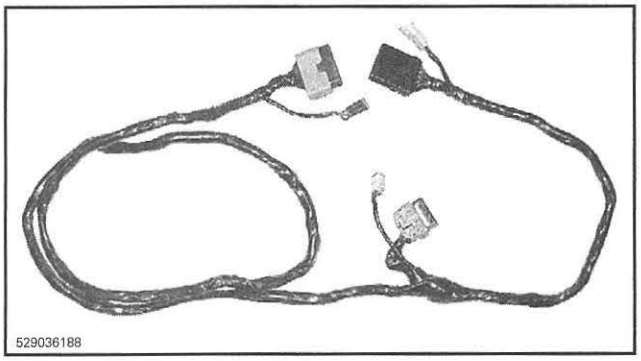

NOTE: Use only the 24 pin connectors.

7. Install the tether cord on the engine cut-off switch.
8. Briefly press the START button to wake up the ECM.
9. Use the FLUKE 115 MULTIMETER (P/N 529 035 868) and select Vdc.
10. Measure the voltage readings on the installed diagnostic harness connector as follows. Refer to wiring diagram for details.

24-PIN CONNECTOR		IDLE POSITION	WIDE OPEN POSITION
PIN		VOLTAGE (VDC)	
9 (VI/BU)	3 (BK)	4.9 - 5.1	
3 (BK)	6 (YL/BU)	0.15 - 0.35	1.4 - 1.6
10 (VI/GN)	4 (BK)	4.9 - 5.1	
4 (BK)	7 (YL/GY)	0.4 - 0.6	2.9 - 3.1

If voltage is as per specification, the TAS sensor is functional.

If voltage is out of specification, check continuity of wires between the ECM and the sensor. If continuity is good, replace sensor.

11. Reinstall removed components.

TAS Replacement (Except X Package)

1. Remove steering cover. Refer to *STEERING SYSTEM*.
2. Pry out sensor locking tabs and pull out sensor.

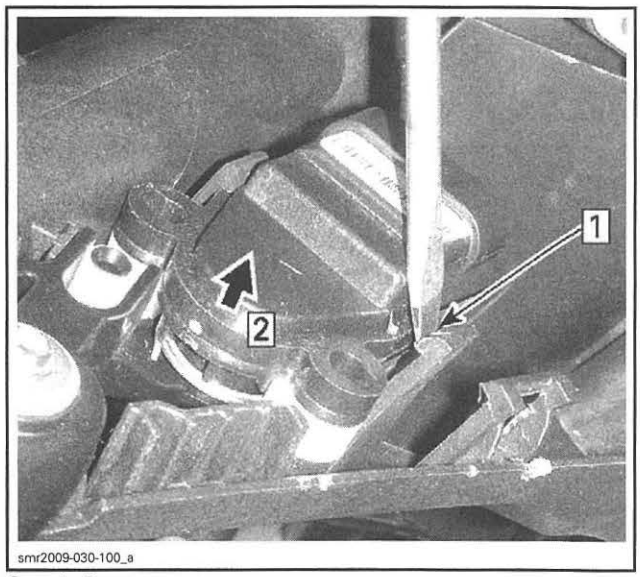

Step 1: Pry out
Step 2: Pull out sensor

3. Pull up on the connector end of the TAS and gently pull it out of the throttle handle.
4. Remove connector from TAS sensor.
5. For installation, reverse the removal procedure. Pay attention to the following.
6. Align sensor pins in their holes.



1. Align pin into hole

7. Press sensor into position until locking tabs engage. Ensure it is properly locked in place.
8. Route harness through the notched bracket.

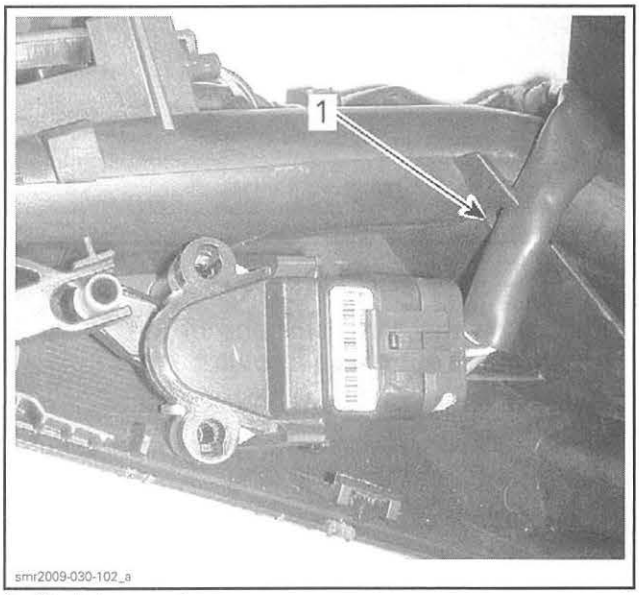

1. Route harness here

9. When installation is complete, ensure throttle lever functions properly.

TAS Replacement (X Package Only)

TAS Removal

1. Remove the 2 screws in the front of the upper handlebar housing.

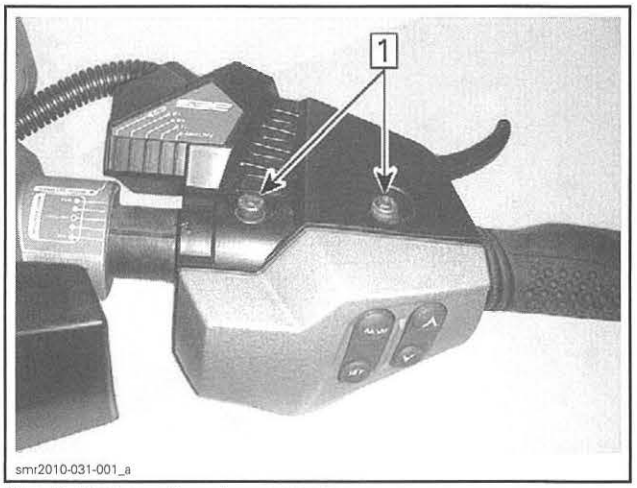

Step 1: Remove these two screws

2. Remove the screw at back of the handlebar.

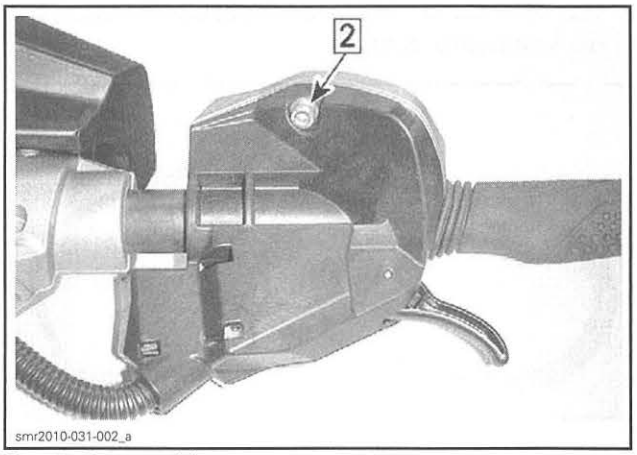

Step 2: Remove this screw

NOTICE **Do not try to pull the cover off the housing at this time or damage to the cover will occur.**

3. Grab hold of the housing cover to prevent it from falling off the handlebar when unlocking the upper housing in the following step.
4. Using a small screwdriver, unlock the tab that retains the upper housing and pull the upper housing off.

NOTICE **As you remove the upper housing, hold on to the housing cover to prevent it from falling off the handlebar.**

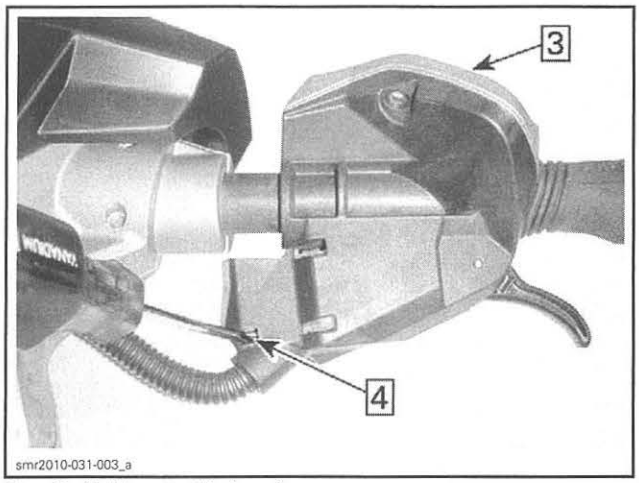

Step 3: Hold on to this housing cover
Step 4: Unlock this tab

5. Remove the housing cover from the handlebar.

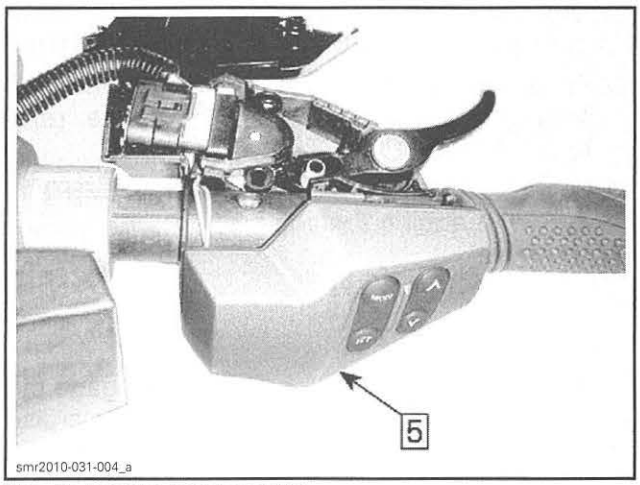

Step 5: Remove housing cover

6. Release the two tabs that retain the TAS in the handlebar housing.

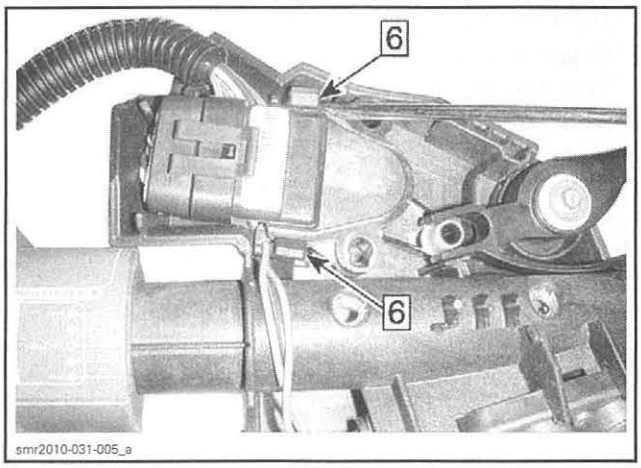

Step 6: Release TAS retaining tabs (2)

7. Pull up on the connector end of the TAS.

8. Gently pull TAS out of the throttle handle.

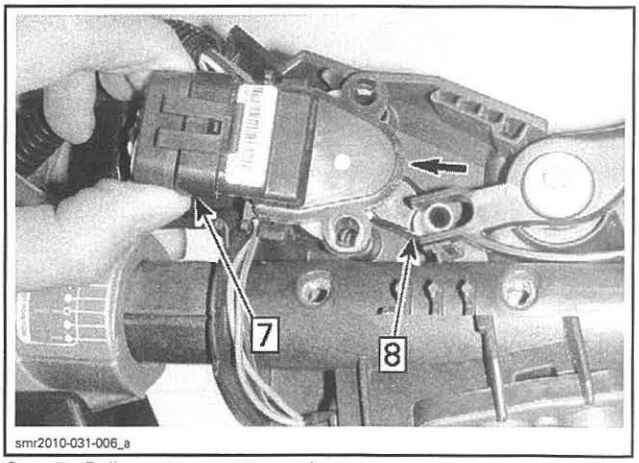

Step 7: Pull up at connector end
Step 8: Pull TAS out of throttle lever here

9. Remove the connector from the TAS.

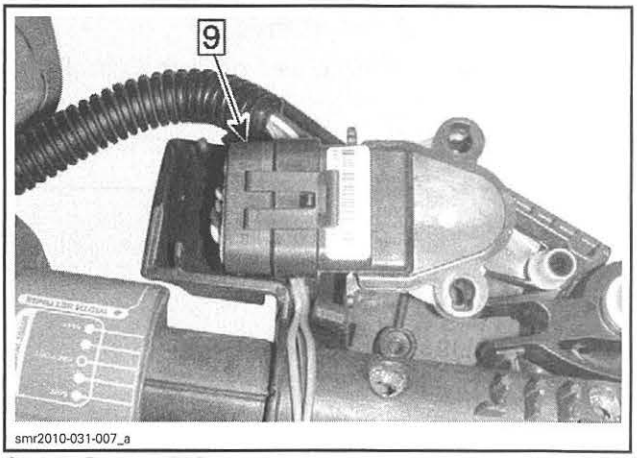

Step 9: Remove TAS connector

TAS Installation

Installation is the reverse of the removal procedure however, pay attention to the following.

1. Install connector on TAS and ensure wiring is properly positioned in handlebar housing.

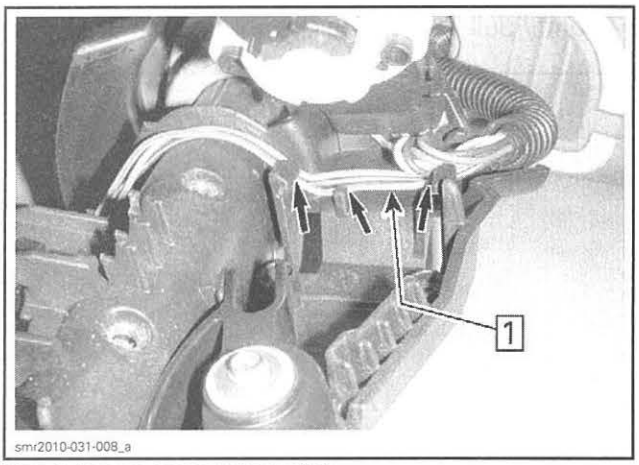

Step 1: Ensure proper wire routing

2. Insert the TAS in the throttle lever.
3. Align the TAS in the housing, then press it into the housing until both locking tabs engage. Ensure it is properly locked in place.
4. Ensure wiring is not pinched.
5. Position the housing cover onto the handlebar housing.
6. Ensure positioning of corrugated conduit.

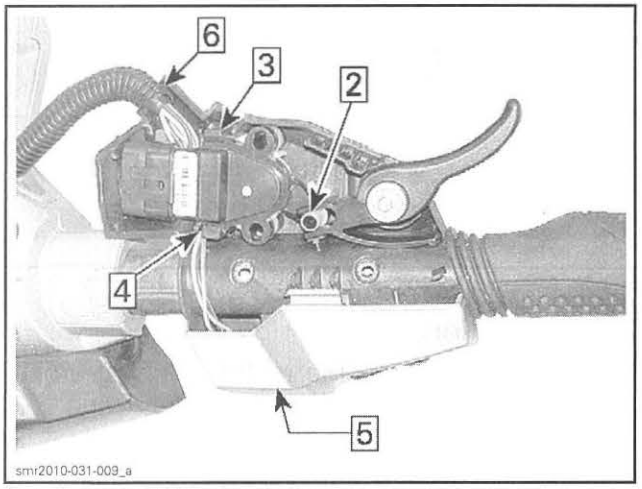

Step 2: Insert TAS in throttle lever
Step 3: Ensure locking tab engagement
Step 4: Ensure wiring is not pinched
Step 5: Install housing cover
Step 6: Ensure proper corrugated conduit positioning

7. Position the upper housing on the handlebar housing.
8. Ensure proper engagement of the upper housing and cover tabs.

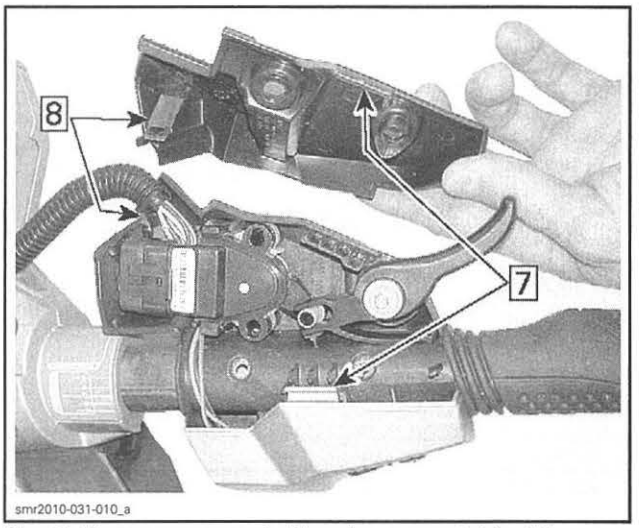

Step 7: Ensure engagement of housing cover retaining tabs
Step 8: Ensure engagement of upper housing locking tabs

9. Install the three retaining screws for the upper housing and torque them to 2 N•m (18 lbf•**in**).
10. Ensure there are no fault codes. Connect watercraft to the latest B.U.D.S. software, refer to *DIAGNOSTIC AND FAULT CODES*.
11. Ensure proper operation of throttle lever and TAS with engine running.

CRUISE SWITCH

Cruise Switch Test

If pressing the cruise switch does not engage the CRUISE or SLOW SPEED modes, test the cruise switch as per following procedure.

1. Connect the watercraft to the latest B.U.D.S. software. Refer to *COMMUNICATION TOOLS AND B.U.D.S.* subsection for details.
2. In B.U.D.S., click the **Monitoring** tab then the **Cluster** tab.
3. Press the cruise button on the RH handlebar and look for the **Cruise** indicator light to come on in the **Switch inputs** area.

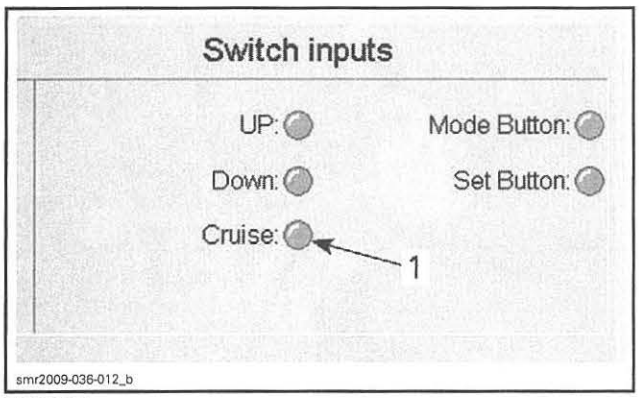

TYPICAL
1. Cruise indicator light

If the test succeeded, the switch and wiring are good and the problem may be related to the information center or ECM. Check for related fault codes. Refer to *DIAGNOSTIC AND FAULT CODES*.

If the test failed, test the switch and wiring as described in the following steps.

4. Remove the gauge support cover. Refer to *GAUGE* subsection.
5. Disconnect the gauge connector.

NOTICE Pull connector lock out sideways. Do not twist the screwdriver.

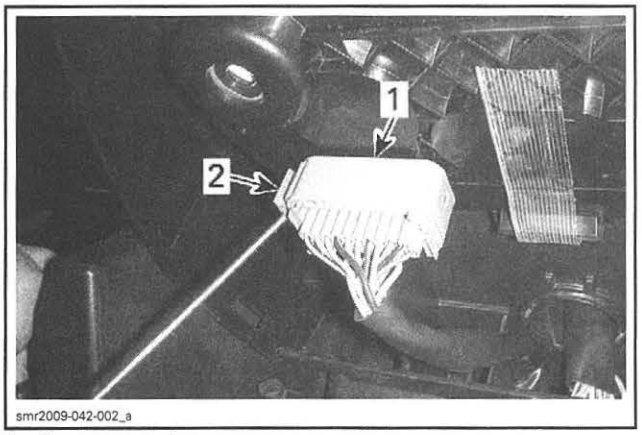

1. Gauge connector
2. Pull out to unlock connector

6. Use the FLUKE 115 MULTIMETER (P/N 529 035 868).
7. Select the Ω (ohm) function.
8. Test the cruise switch as per following table.

CRUISE SWITCH TEST			
GAUGE CONNECTOR		SWITCH POSITION	RESISTANCE
Pin 7	Pin 10	Switch released	OL
		Switch depressed	Close to 0 Ω

If the test failed, replace the cruise switch.

If the test succeeded, the problem may be internal to the information center. Try a new one.

Cruise Switch Replacement

1. Disconnect information center connector.

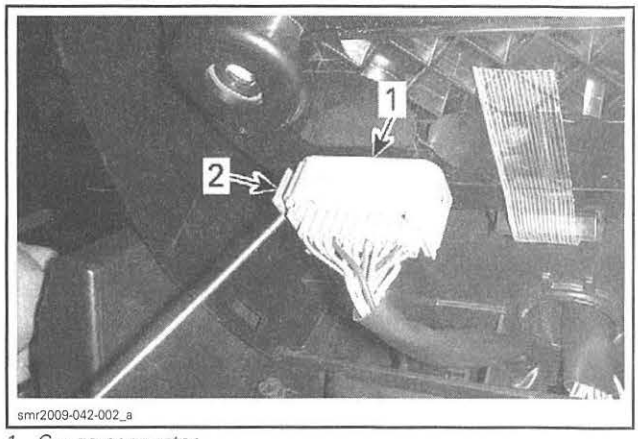

1. Gauge connector
2. Pull out to unlock connector

2. Remove terminal 7 (GRAY wire) and 10 (BLACK wire) from the gauge connector.

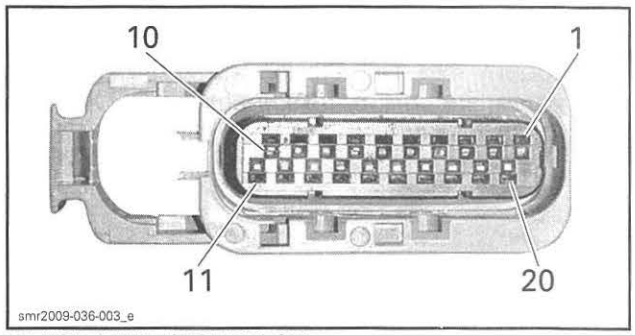

GAUGE CONNECTOR PIN-OUT

3. Attach a string approximately 1.2 m (4 ft) to the end of the wires which will be used for drawing the new switch wires through the harness protective sheath.
4. Remove steering cover. Refer to *STEERING AND O.T.A.S.* subsection.
5. Remove the MODE/SET and UP/DOWN arrow switches from its support.

NOTE: It is not necessary to disconnect switches.

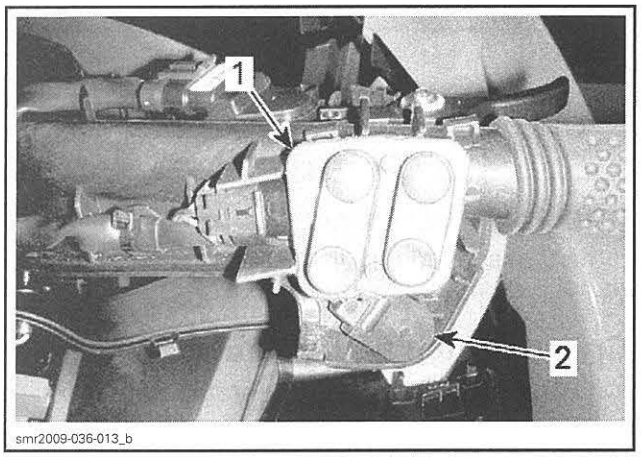

1. MODE/SET and UP/DOWN arrow switches
2. Cruise switch

6. Remove the cruise switch by lifting it off its support.
7. Cut the locking ties from the harness sheath as necessary.
8. Carefully pull the wires out of the harness. Ensure the string draws through the harness sheath.
9. Tie the string to the new cruise switch wire ends and pull the new wires through the harness.
10. Install new switch terminals in the gauge connector.
11. Apply a small amount of DIELECTRIC GREASE (P/N 293 550 004) on switch terminals.
12. Reconnect gauge connector.
13. Properly insert cruise switch wiring in slot in switch support before installing MODE/SET and UP/DOWN arrow switches.

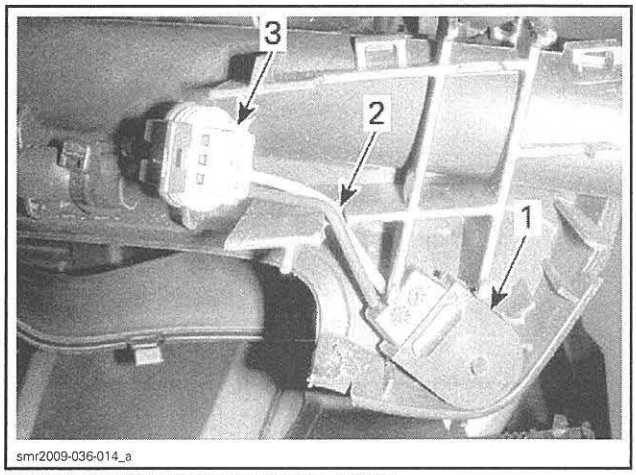

SOME PARTS REMOVED FOR CLARITY
1. Cruise switch
2. Wiring in slot
3. MODE/SET and UP/DOWN arrow switch connector

14. Complete installation in reverse order of removal.

SPORT/ECO SWITCH

Sport/ECO Switch Overview

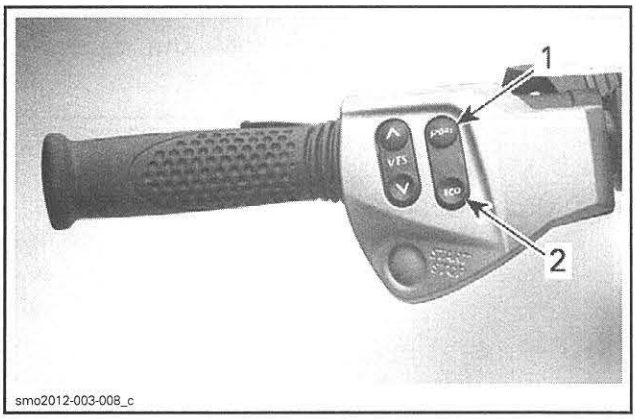

LH SIDE
1. Sport buttons
2. ECO button

The Sport/ECO switch contain a series of 4 diodes for the Sport and ECO switches.

The center wire to the switches (pin C), is common for Sport/ECO switch and VTS switch. The other two wires (pins A and B), act as signal wires for each set of switches to the gauge. They actually each form one branch of an electronic circuit within the gauge.

Each diode (in circuit) drops a nominal 0.6 Vdc when conducting electricity. If the circuit current passes through all four diodes (if the Sport/ECO switch is open), a drop of 2.4 Vdc would be measured across the 4 the diodes (pin B to pin C). This 2.4 Vdc at pin B tells the gauge the Sport/ECO switch is open.

If the Sport button is pressed, 2 diodes are bypassed. The remaining two diodes in the circuit drop 1.2 Vdc (at pin B).

If the ECO button is pressed, 1 diode is bypassed. The remaining three diodes in the circuit drop 1.8 Vdc (at pin B).

The gauge senses these voltages through pin 14 of its connector, and interprets them as signals that tell it which switch is activated.

When Sport or ECO button is pressed, a circuit within the gauge will translate it to CAN protocol and transmit it through the CAN bus. The ECM (engine control module) will react to the command and carry out the function.

NOTE: The above stated voltages vary slightly depending on the actual voltage applied to the circuit and the current flow through the diodes. When using a Fluke 115 multimeter for testing in diode test mode, the voltage and current applied by the multimeter are lower than in circuit. The quality of probe contact, the actual probes and leads, and the precision of the meter calibration will all affect the results, which will most likely be slightly lower than nominal values stated.

Sport/ECO Switch Operation Test

If Sport/ECO switches do not allow the selection, test the switches as follows:

- Check the Sport/ECO switch operation using B.U.D.S. software. Refer to *COMMUNICATION TOOLS AND B.U.D.S. SOFTWARE* subsection to connect B.U.D.S.
- Check if there is any occurred or active fault code(s). If not, proceed with the following test.
- Depress the Sport button on steering and check if the **Sport** light turn on in B.U.D.S.
- Repeat with the ECO switch. **ECO** light should turn on in B.U.D.S.

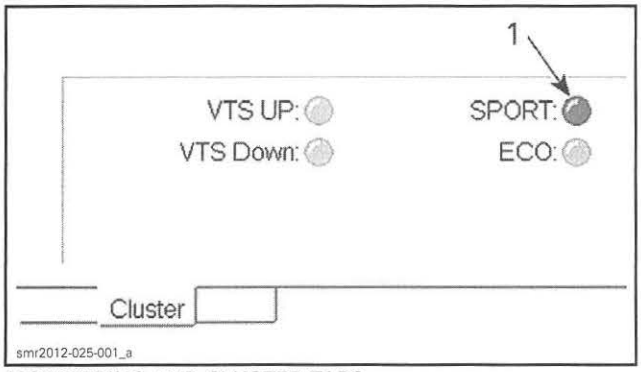

MONITORING AND CLUSTER TABS
1. Sport light

If one switch does not function, replace Sport/ECO switch.

If both switches stay off, do the following to verify the circuit.

1. Remove the gauge support cover.
2. Disconnect the gauge connector.

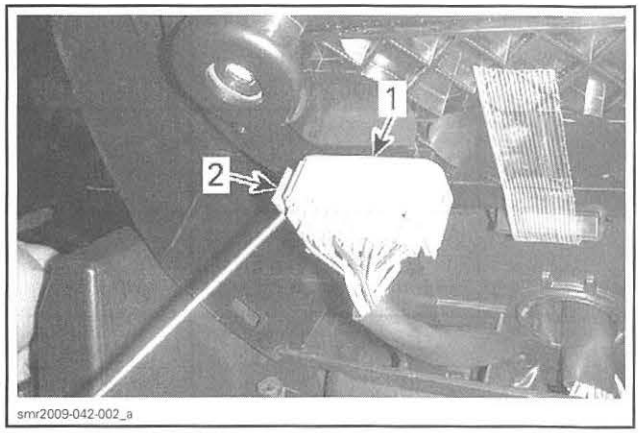

1. Gauge connector
2. Slide out gauge connector tab to unlock

3. Using the FLUKE 115 MULTIMETER (P/N 529 035 868) set to the diode test function, test the Sport or ECO switches as per following tables.

NOTE: In diode test mode, the multimeter will test the voltage drop through the diodes.

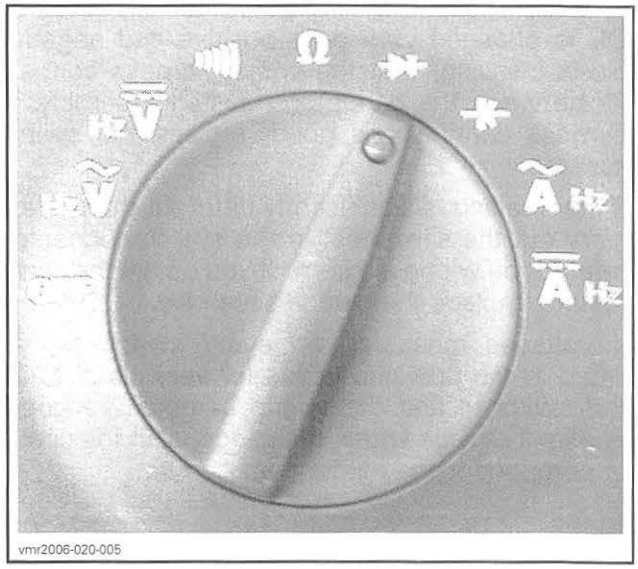

iS SWITCH TEST		
SWITCH POSITION	MULTIMETER LEAD/GAUGE CONNECTOR	VOLTAGE
Switch released	BLACK/WHITE lead/Pin 14 WHITE/GN lead/Pin 15	Approx. 2 Vdc
	WHITE/GN lead/Pin 14 BLACK/WHITE lead/Pin 15	OL
UP depressed	BLACK/WHITE lead/Pin 14 WHITE/GN lead/Pin 15	Approx. 1.1 Vdc
	WHITE/GN lead/Pin 14 BLACK/WHITE lead/Pin 15	OL
DOWN depressed	BLACK/WHITE lead/Pin 14 WHITE/GN lead/Pin 15	Approx. 1.6 Vdc
	WHITE/GN lead/Pin 14 BLACK/WHITE lead/Pin 15	OL

NOTE: Remember that each diode should drop approximately 0.6 Vdc when positively biassed, and read as an OL (open circuit) when negatively biassed (leads reversed).

If, when measuring between pins 14 and 15 an OL is obtained with both positive and negative diode biassing, test the wiring harness continuity between the gauge and switch assembly. If harness continuity is good, replace the switch assembly.

If any reading is significantly different than listed, carry out the same test at the switch connector, refer to the wiring diagram. If you obtain the same results, replace the switch assembly.

If voltages measured on every switch are as listed in the previous tables (or very close to it), the switches and the wiring harness are good. The fault may be within the gauge, or in the circuit or component the function applies to.

ELECTRONIC FUEL INJECTION (EFI)

SERVICE TOOLS

Description	Part Number	Page
DIGITAL INDUCTION TACHOMETER	529 014 500	266
ECM ADAPTER TOOL	529 036 166	268, 271, 281, 289, 294–295, 297–298, 300
FLUKE 115 MULTIMETER	529 035 868	268, 271–272, 280–281, 287, 289, 291, 294, 297–298
FUEL HOSE DISCONNECT TOOL	529 036 037	276

SERVICE TOOLS – OTHER SUPPLIER

Description	Part Number	Page
FLUKE AUTOMOTIVE BACK PROBE PIN	TP40	292
FLUKE SUREGRIP INSULATED TEST LEADS	TL224	292

SERVICE PRODUCTS

Description	Part Number	Page
LOCTITE 243 (BLUE)	293 800 060	272, 277, 290, 300
LOCTITE 518	293 800 038	299

GENERAL

⚠ WARNING

Always disconnect battery prior to working on the fuel system. Always disconnect battery exactly in the specified order, BLACK (-) cable first. Electrical connections should be disconnected prior to disconnecting fuel lines.

⚠ WARNING

Fuel vapors are flammable and explosive under certain conditions. Ensure work area is well ventilated. Do not smoke or allow open flames or sparks in the vicinity.

Use B.U.D.S. software to release the fuel pressure in the system prior to disconnecting a fuel line. Refer to *FUEL TANK AND FUEL PUMP* subsection.

Cover the fuel line connection with an absorbent shop rag before disconnecting them. Slowly disconnect the fuel hose to minimize spilling.

⚠ WARNING

Fuel lines remain under pressure at all times. Always proceed with care and use appropriate safety equipment when working on a pressurized fuel system. Wear safety glasses. Do not allow fuel to spill on hot engine parts and/or on electrical connectors. Proceed with care when removing or installing high pressure test equipment, or disconnecting fuel line connections. Wipe off any fuel spillage in the bilge. Never use a hose pincher on high pressure hoses.

When the repair is completed, ensure the hose from the fuel rail to the fuel pump is properly connected and secured in its support. Perform the *FUEL SYSTEM HIGH PRESSURE LEAK TEST* as described in *FUEL TANK AND FUEL PUMP* subsection.

⚠ WARNING

Always perform the fuel system high pressure leak test if any component has been removed or disconnected.

⚠ WARNING

If a gasoline leak and/or odor is present, do not start the engine. Repair the leak.

SYSTEM DESCRIPTION

The electronic fuel injection system (EFI) on this engine is based on the open-loop Bosch ME-Motronic system. It is comprised of various sensors used for detecting ongoing operating conditions of the engine and watercraft, and includes all the actuators that perform the required adjustment to the engine.

This system also introduces torque management functions.

Electrical System

ECM (Electronic Control Module)

From input signals (e.g. throttle lever, iBR lever), the ECM acknowledges driver demands and converts them to an engine torque requirement through calculation of several variables. Then, the ECM controls the iTC (intelligent Throttle Control), the injection system and the ignition system to meet the torque requirement.

The ECM manages the engine torque requirements and controls engine operation to ensure it is delivering optimum performance, fuel economy and meeting emission regulations. The ECM also controls idle speed and limits maximum engine speed.

Since the ECM manages several torque requirements at the same time including contradictory demands (such as the throttle lever and the iBR lever being fully pulled in at the same time), it must prioritize the most important requirement according to predefined conditions and apply the proper action.

EFI Sensors

The ECM reads the inputs from the sensors which it compares to predetermined parameters stored in the ECM, makes computations, and activates the outputs accordingly (injectors, ignition coils etc.).

Signals from sensors are used by the ECM to determine the injection and ignition parameters (referenced to fuel and ignition maps) as required to maintain the optimum air-fuel ratio.

Air Induction

Throttle Body

A 62 mm throttle body is mounted on the intake manifold.

Air for combustion is drawn in by the engine or by a mechanically-driven supercharger. The air flows through the throttle body and is controlled by a throttle plate.

Fitted on the throttle body, an electronic throttle actuator (ETA) allows the ECM to electronically control the throttle plate opening which regulates the amount of air that enters the engine, and therefore engine speed.

There is no idle air control valve (IACV).

Fuel System

Fuel Rail

A single fuel rail is mounted on the intake manifold. The fuel rail ensures that enough fuel can be delivered to the fuel injectors throughout the engine operating range.

The fuel rail is fed by the fuel pump. The fuel pressure applied to the fuel rail is regulated by the fuel pressure regulator located in the fuel pump module.

Fuel Injectors

Three fuel injectors are used to inject fuel into the intake ports of the cylinder head. One injector is used per cylinder.

Fuel Pump

An electric fuel pump with an integrated pressure regulator is used. For more details on the fuel pump unit, refer to *FUEL TANK AND FUEL PUMP* subsection.

ADJUSTMENT

IDLE SPEED

Idle speed is not adjustable. The ECM controls the idle speed of the engine through the iTC system by controlling throttle plate opening using the ETA (electronic throttle actuator).

If desired, the engine RPM can be measured following this procedure:

1. Use a DIGITAL INDUCTION TACHOMETER (P/N 529 014 500).

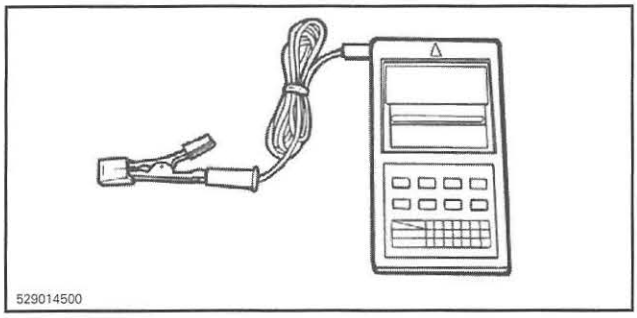

2. Wrap the tachometer's wire a few times around the protruding part of the ignition coil.

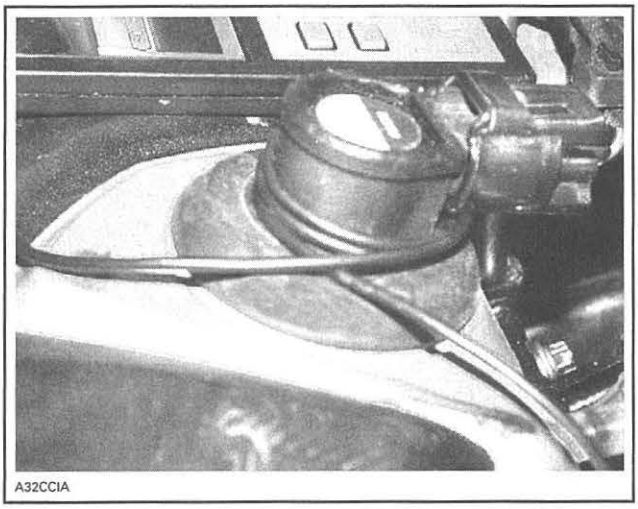

TYPICAL

3. Start engine, read the engine RPM on the induction tachometer.

NOTE: If idle speed is not within specifications, check if there is any occurred or active fault code(s). If not, proceed with the *CLOSED THROTTLE RESET PROCEDURE*. If idle speed is still not adequate, there is probably a mechanical problem.

CLOSED THROTTLE RESET

General Information

This operation performs a reset of the TPS values of the throttle body in the ECM.

Closed throttle reset must be carried out only when:

- Replacing the throttle body.
- Replacing the ECM.

Closed Throttle Reset Procedure

1. Use the B.U.D.S. software to perform this setting. Refer to *COMMUNICATION TOOLS AND B.U.D.S.* subsection.
2. Press the START button to wake up the ECM.
3. Install the tether cord on the engine cut-off switch.
4. Ensure throttle lever is completely released.
5. In B.U.D.S., click the ECM **Setting** tab, then click on the **Reset** button.

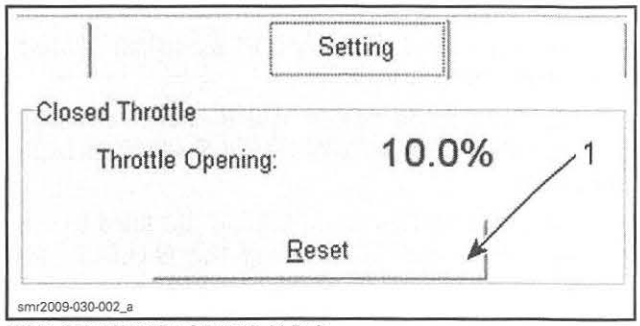

ECM SETTING PAGE IN B.U.D.S.
1. Click Reset button

The following message will confirm the operation.

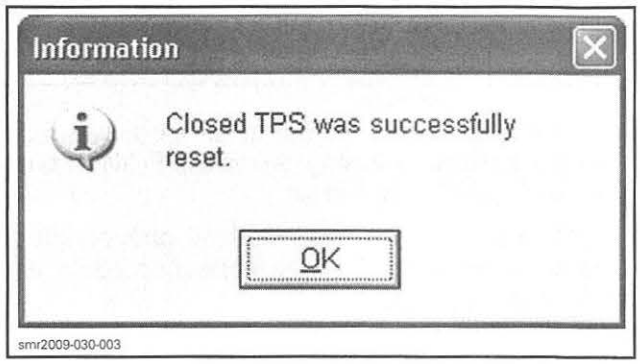

Reset is completed.

NOTE: It is not necessary to click on the Write button in B.U.D.S.

Exit B.U.D.S.

NOTE: If the throttle valve was not within the allowed range when the **Closed Throttle** reset was carried out, no error message would be displayed. However, a fault code would be set when the engine is started.

6. Start engine and make sure it operates normally through its full engine RPM range.
7. Check for fault codes using B.U.D.S. If a fault code related to the throttle actuator appears, clear it, then carry out another **Closed Throttle** reset procedure. To clear faults, refer to *DIAGNOSTIC AND FAULT CODES* subsection.

TROUBLESHOOTING

DIAGNOSTIC TIPS

Engine problems are not necessarily related to the fuel injection system.

It is important to ensure that the engine/propulsion system, fuel delivery and electrical systems are functioning normally.

For diagnostics purposes, use B.U.D.S. software. See *COMMUNICATION TOOLS AND B.U.D.S.* subsection.

After a problem has been solved, be sure to clear the fault(s) in the ECM using the B.U.D.S. software.

⚠ WARNING

All electrical actuators and electronic modules are powered as soon as the START button is pressed. Always disconnect the battery prior to disconnecting any electrical or electronic parts.

Never use a battery charger to temporarily substitute the battery as it may cause the ECM to function erratically, or not at all.

Check related-circuit fuse solidity and condition with an ohmmeter. A visual inspection could lead to a false diagnosis.

Electrical Related Problems

It is important to check the following in the electrical system:

- Battery voltage
- Fuses
- Bus bar condition in fuse box
- Ground connections
- Wiring and connectors.

Ensure that all electronic components are genuine OEM. Any modification to the wiring harness may lead to poor system operation or generate fault codes.

Electrical Connections

Pay particular attention to ensure that terminals and pins are not out of their connectors, corroded, or out of shape.

When probing terminals, pay attention not to deform the terminals as this could cause a loose or intermittent connection that would be difficult to troubleshoot.

PROCEDURES

ENGINE CONTROL MODULE (ECM)

CAN Continuity Tests

If a communication problem is present, perform the appropriate continuity test relating to the component reported by, or not available in B.U.D.S.

Test wire continuity between the corresponding terminal of the CAN bus bar in the fuse box and the suspected component as follows.

For fuse box access, refer to *POWER DISTRIBUTION AND GROUNDS* subsection.

Remove both CAN bus bars.

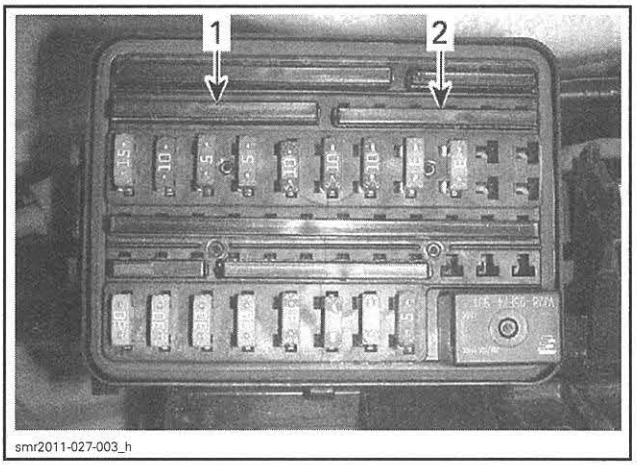

1. CAN LO bus bar
2. CAN HI bus bar

Inspect bus bar condition.

Disconnect the connector from the component to be tested. Refer to its appropriate subsection.

Use the FLUKE 115 MULTIMETER (P/N 529 035 868) and select Ω.

Refer to the *CAN BUS DIAGRAM* above and read wire resistance between the each bus bar terminal and the applicable component terminal. Check the continuity of the WHITE/RED wire and the continuity of the WHITE/BLACK wire.

The following gives an example between the CAN LO wire and the ECM.

NOTE: When working with the ECM, install the ECM ADAPTER TOOL (P/N 529 036 166) on ECM "B" connector. For connector identification, refer to *ELECTRONIC FUEL INJECTION (EFI)* subsection.

CONTINUITY TEST EXAMPLE: ECM TO FUSE BOX		
ECM CONNECTOR	FUSE BOX TERMINAL	RESISTANCE
B-C2	G1	Close to 0 Ω (continuity)

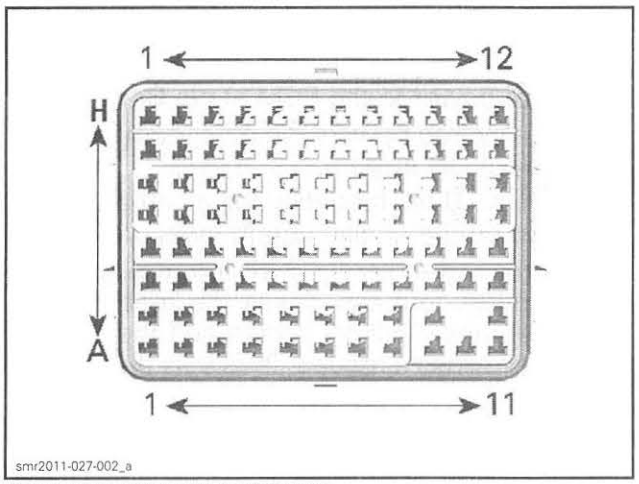

FUSE BOX PIN IDENTIFICATION

If continuity is good, CAN wires are in good condition.

If continuity is not good, check wiring, connectors and terminals condition.

NOTE: It may be necessary to check the continuity to more than one component.

Reconnect connectors and reinstall removed parts.

ECM Access

Open/remove seat.

Models with Suspension

1. Remove the rear ventilation box located over the engine. Refer to *AIR INTAKE SYSTEM*.
2. Remove deck extension. Refer to *BODY*.

All Models

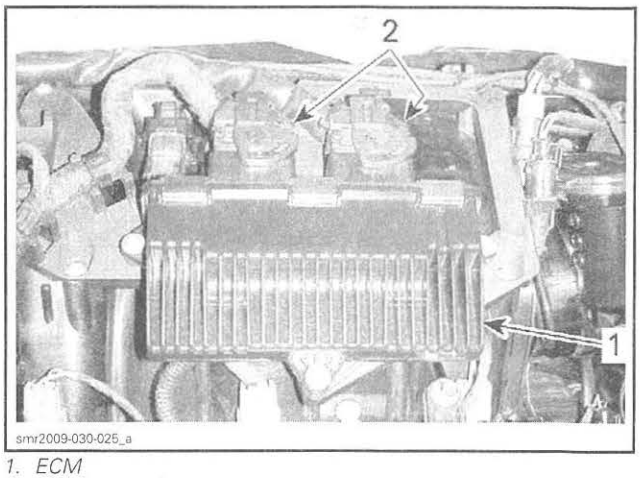

1. ECM
2. ECM connectors

ECM Connector Identification

There are 2 connectors connected to the ECM.

The engine harness female connector is connected to the ECM module male connector "A".

The vehicle system control harness female connector is connected to the ECM module male connector "B".

The ECM connectors have 48 pins.

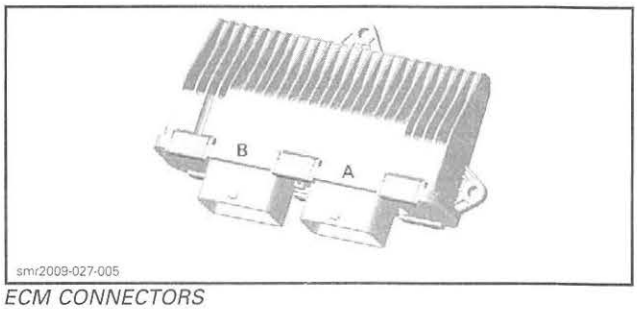

ECM CONNECTORS

NOTE: For connector information, cleaning and probing, refer to *WIRING DIAGRAM* subsection.

ECM Power Supply Diagram

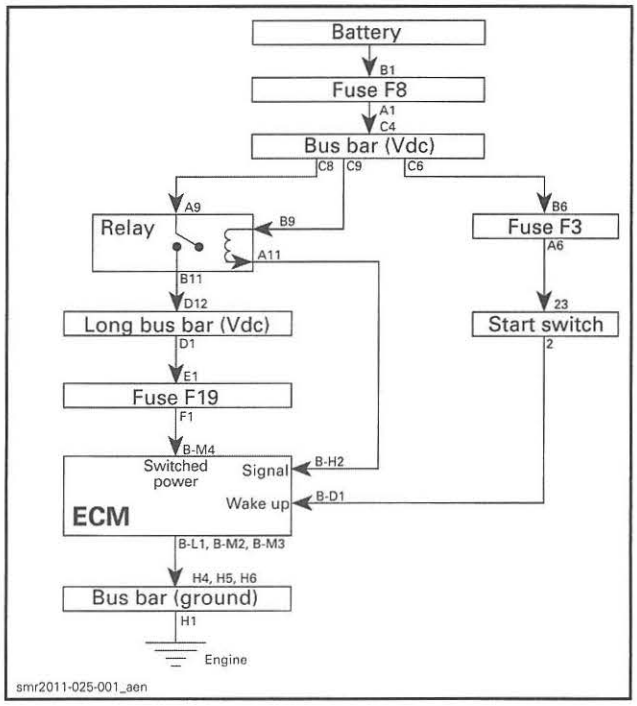

ECM Wake Up Validation

Press the START button.

NOTE: Do not install the tether cord.

QUICK INDICATION THAT ECM IS POWERED (assuming the observed component is working)
Information center turns on.
Fuel pump turns on for approximately 5 seconds.

NOTE: Since the tether cord is not installed, the information center will turn off a few seconds after the self-test, but the ECM and electrical system will stay powered for approximately 3 minutes longer.

If the ECM does not turn on, check the following:

- Fuses F8, F19 and F3 in fuse box
- Battery voltage. Refer to *CHARGING SYSTEM*
- The 12 Vdc power bus bars in fuse box
- The ground bus bar in fuse box
- Relay and wiring. Refer to *POWER DISTRIBUTION*
- ECM power supply wires and ground wires. See following procedure.

ECM Wake Up Logic

With Tether Cord Installed

When the START button is pressed to start engine:

- ECM pin B-D1 receives current from battery via the START switch. ECM is woken up.
- ECM pin B-H2 provides a ground to the relay coil in fuse box.
- The relay contacts close and provides main 12 Vdc power to the ECM at pin B-M4.
- The relay also powers the other components in the electrical system.
- ECM pin B-E4 monitors for a tether cord installed on the engine cut-off switch.
- When a tether cord is installed, the magnet in the tether cord cap closes the reed switches in the engine cut-off switch and the ECM pin B-F2 provides a ground. This tells the ECM the tether cord is installed.
- ECM pin B-B2 reads the D.E.S.S. key in the tether cap and determines if it is valid. If so, the engine can be started.

Without a Tether Cord Installed

When the START button is pressed:

- The information center turns on, goes through the self-test function, displays applicable messages and turns off a few seconds later.
- The engine cannot be cranked.
- The ECM stays powered up until it removes the ground to the relay coil after 3 minutes (pin B-H2).
- Relay contacts open and power to the ECM is removed.
- Power is also removed on all other electrical systems except the GPS supply to the information center.

ECM Shut Down Logic

When the engine is stopped by using the STOP button or by removing the tether cord from the engine cut-off switch, the following occurs:

- ECM stops the engine.
- After 5 seconds, the information center turns off.
- After 60 seconds, ECM (pin B-H2) removes the ground to the relay coil.
- Relay contacts open and power to the ECM is removed.
- Power is also removed on all other electrical systems except the GPS supply to the information center.

ECM Power Supply Test

1. Remove cover from fuse box. Refer to *POWER DISTRIBUTION* subsection.
2. Press the START button to wake up the ECM.

NOTE: Do not install the tether cord.

3. Use the FLUKE 115 MULTIMETER (P/N 529 035 868) and select Vdc.
4. Probe fuse F19 as illustrated.

NOTE: This will validate the fuse at the same time.

FUSE BOX	BATTERY POST	VOLTAGE
Fuse F19 terminal at F1	Ground	Battery voltage
Fuse F19 terminal at E1		

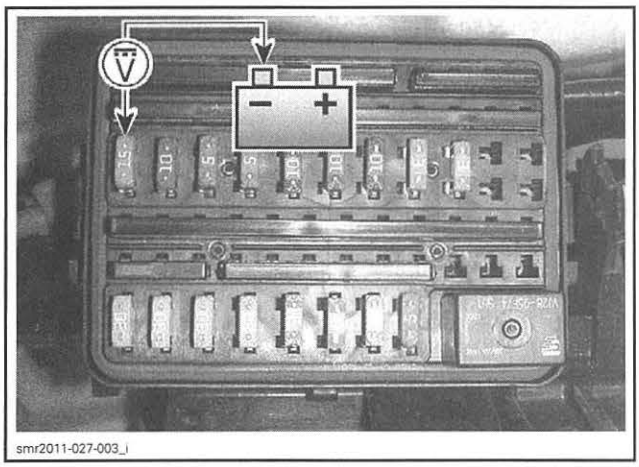

smr2011-027-003_i

If battery voltage is measured at E1 but not at F1, replace the fuse.

If voltage is not measured at E1, check the wiring and connections between the relay output and F19 output. Refer to *WIRING DIAGRAM*.

If voltage is as per specification, carry out the *CONTINUITY TEST OF ECM POWER CIRCUIT*.

Continuity Test of ECM Power Circuit

1. Wait for electrical power to go off (approximately 3 minutes).
2. Disconnect "B" connector from ECM.
3. Install ECM ADAPTER TOOL (P/N 529 036 166) on ECM connector.

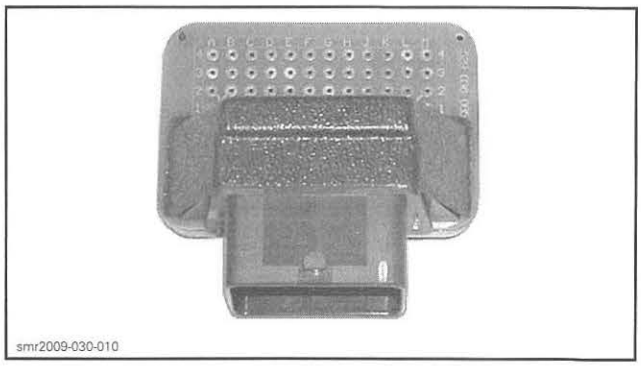
smr2009-030-010

4. Use the FLUKE 115 MULTIMETER (P/N 529 035 868) and select Ω.
5. Probe terminals as per following table.

FUSE BOX	ECM ADAPTER	RESISTANCE
Terminal F1	Pin B-M4	Close to 0 Ω

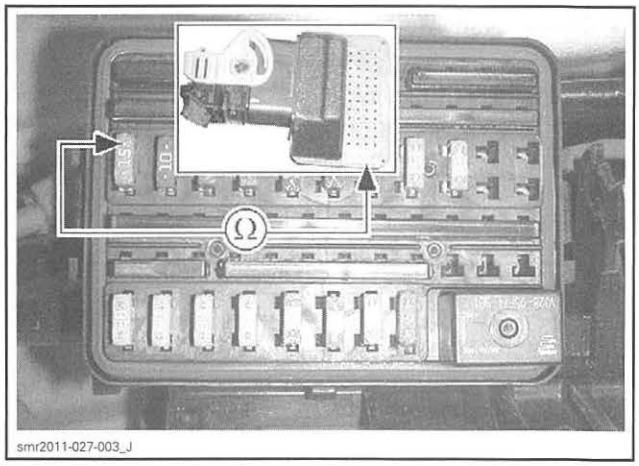

smr2011-027-003_j

If an open circuit is measured, repair or replace wiring and connectors.

If the ECM power circuit tests good, the problem may be one of the following:

- Start switch circuit open to ECM, refer to *STARTING SYSTEM* subsection.
- ECM not providing a ground to relay in fuse box, refer to *POWER DISTRIBUTION* subsection.
- ECM ground wire open circuit, refer to *CONTINUITY TEST OF ECM GROUND CIRCUITS* in this subsection.
- ECM internal problem.

Continuity Test of ECM Ground Circuits

1. Disconnect "B" connector from ECM.
2. Install ECM ADAPTER TOOL (P/N 529 036 166) on ECM connector.

3. Use the FLUKE 115 MULTIMETER (P/N 529 035 868) and select Ω.
4. Probe adapter terminals as per following table.

ECM ADAPTER	BATTERY POST	RESISTANCE
Pins B-L1, B-M2 and B-M3	Ground	Close to 0 Ω (continuity)

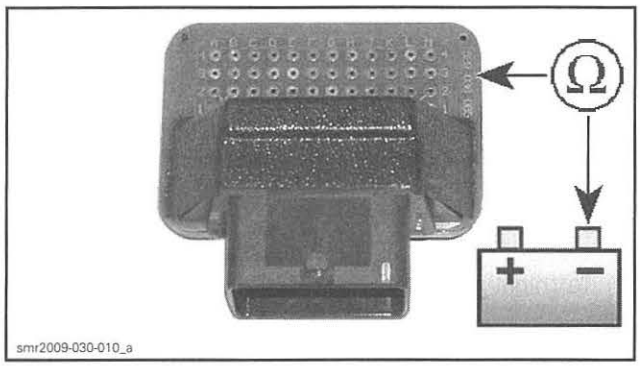

If measurement is out of specification, check ground bus bar in fuse box and continuity of its wires and connections with the engine grounds. Also check battery ground and engine grounds. Refer to *POWER DISTRIBUTION AND GROUNDS*.

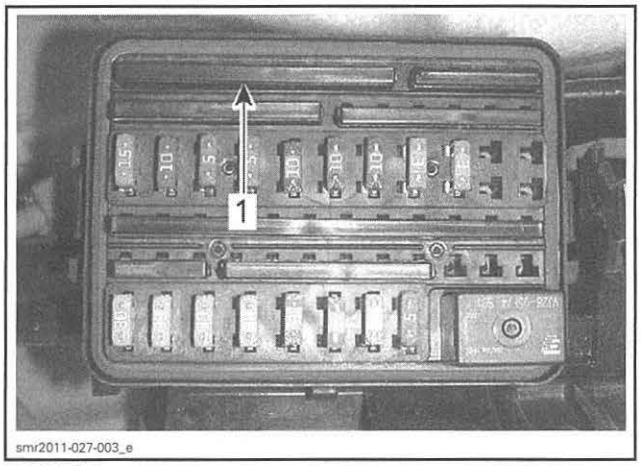

TYPICAL
1. Ground bus bar in fuse box

If everything tests good and ECM does not power up, try a new ECM. Refer to *ECM REPLACEMENT*.

ECM Removal

NOTE: If a new ECM is to be installed, first read the procedures in *ECM REPLACEMENT* in this subsection.

1. Disconnect battery cables.

⚠ WARNING

Always disconnect the BLACK negative (–) battery cable first, then disconnect RED positive (+) cable.

2. Disconnect both ECM connectors from ECM.
3. Unscrew all retaining screws and remove the engine ECM from its support on the intake manifold.

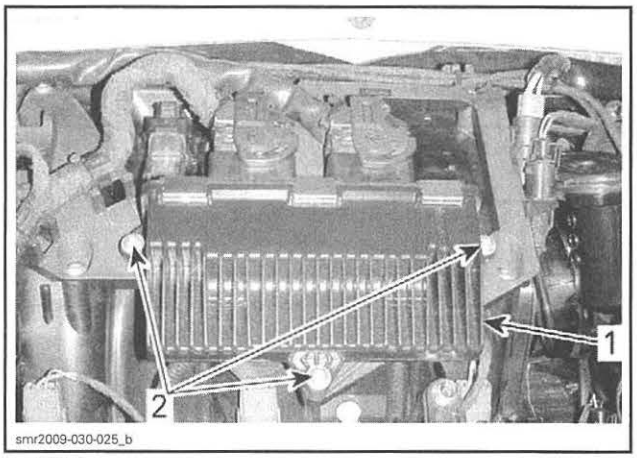

1. ECM
2. Retaining screws

ECM Installation

Reverse removal procedure however, pay attention to the following.

1. Install ECM. Apply LOCTITE 243 (BLUE) (P/N 293 800 060) to mounting screws and torque to 5.5 N•m (49 lbf•**in**).

NOTICE **Always replace ECM by the same part number or by a BRP approved equivalent.**

2. Reconnect ECM connectors.
3. Reconnect battery cables.

⚠ WARNING

Always reconnect the RED positive (+) battery cable first, then reconnect BLACK negative (–) cable.

4. If a new ECM is installed, refer to *ECM REPLACEMENT* in this subsection.

ECM Replacement

Prior to replacing a suspected ECM, ensure that all the recommendations in the general introduction of this section have been followed.

When installing a new ECM, data must be entered and a reset is required.

ECM Manual Data Entry

There are 2 possible methods to collect the required information. The 1st being the easiest:

1. Use B.U.D.S. software and obtain the data from a saved **.mpem** file on your PC computer.
2. Collect the information from the vehicle and BOSSWeb.

1st Collecting Method: Obtaining the Data from a Saved .mpem File

1. Use the B.U.D.S. software.

NOTE: It is not necessary to perform any connection. The PC computer can be used alone.

2. In B.U.D.S., click on the **Open** button.

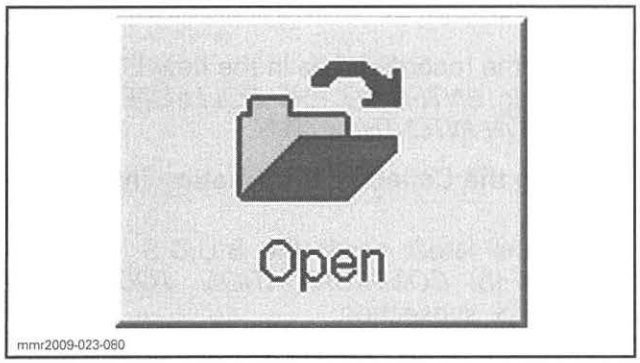

3. Click once on the **Folder Up** button in the **Open** box.

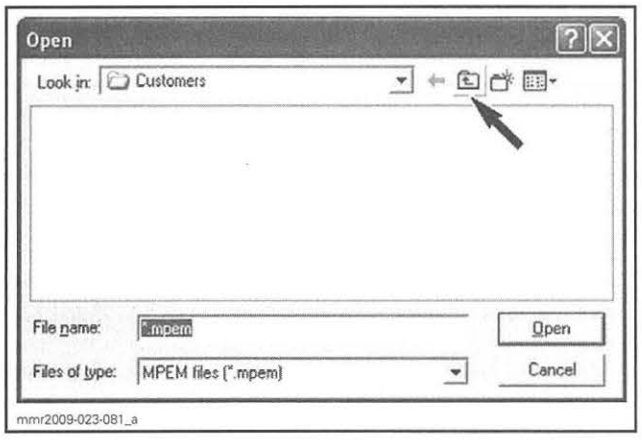

Double click on the **AutoSave** folder.

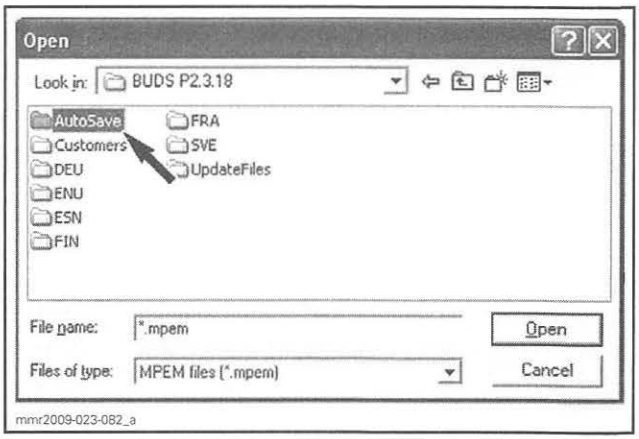

NOTE: You may have to go to another **AutoSave** folder from a previous version of B.U.D.S.

4. Choose the latest file saved for this specific vehicle.

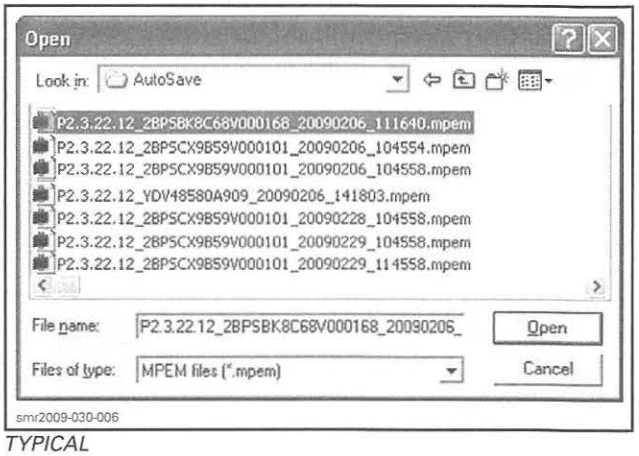

TYPICAL

IMPORTANT: Be sure to use the file that specifically matches the vehicle you are servicing.

NOTE: The file name structure is as follows:
BUDS version_VIN_date read (yyyymmdd)_hour read (hhmmss).mpem
Example: P2.3.22.12_2BPSBK8C68V000168_20090206_111640.mpem Hence: B.U.D.S. version: P2.3.22.12 VIN: 2BPSBK8C68V000168 Date: 2009 02 06 Hour: 11h 16m 40s

5. Go in the **Vehicle** tab and record the following information.
   1. Vehicle serial number
   2. Engine serial number (without the leading "M")

3. Vehicle model number
4. Customer name.

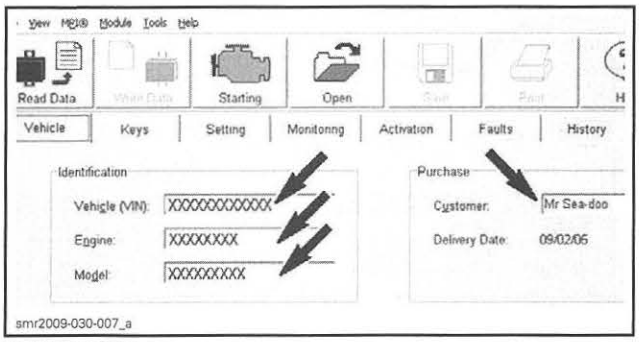

VEHICLE TAB

6. Enter recorded data in ECM as detailed in *ENTERING THE COLLECTED INFORMATION INTO THE ECM.*

2nd Collecting Method: Collect the Information from the Vehicle and BOSSWeb

1. Record engine serial number.

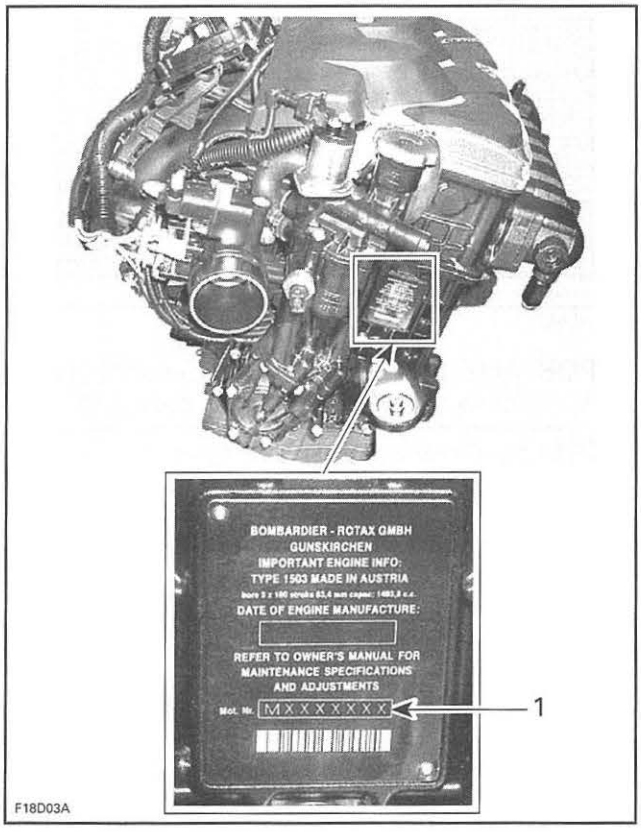

1. Engine serial number

2. Record the following numbers using BOSSWeb. Look in **Service** menu and choose **Unit history**.
   1. Vehicle serial number
   2. Vehicle model number
   3. Customer name.

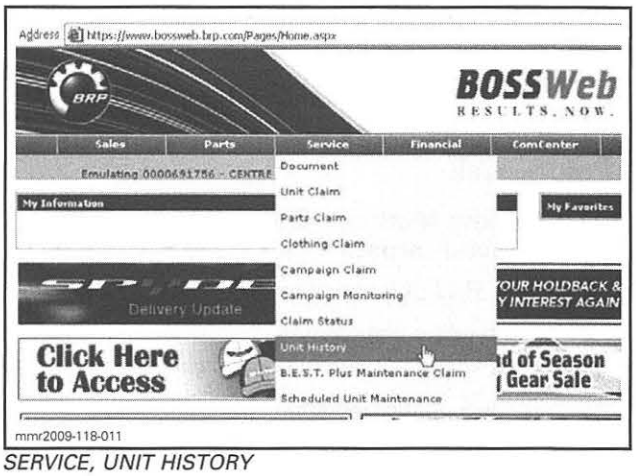

SERVICE, UNIT HISTORY

3. Enter the recorded data in the new ECM as detailed in *ENTERING THE COLLECTED INFORMATION INTO THE ECM.*

Entering the Collected Information into the ECM

1. Use the latest applicable B.U.D.S. software. Refer to *COMMUNICATION TOOLS AND B.U.D.S.* subsection.
2. Press the START button to wake up the ECM.
3. Install the tether cord on the engine cut-off switch.
4. In B.U.D.S., click the **Read Data** button to read the new ECM.

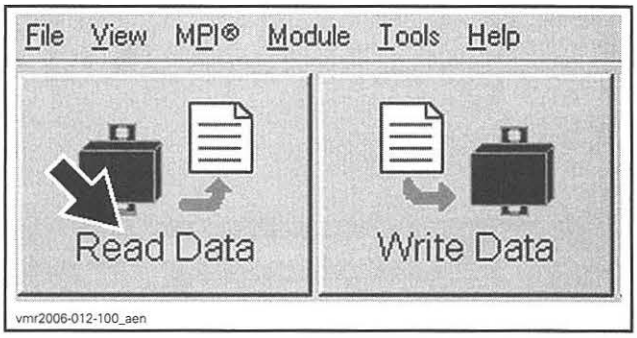

The following window will pop up.

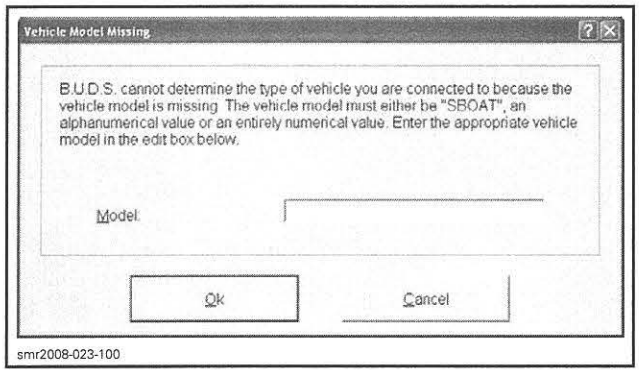

5. Enter the vehicle model number.

NOTICE Do not enter SBOAT for a PWC. Enter only the appropriate model number as obtained when gathering the information.

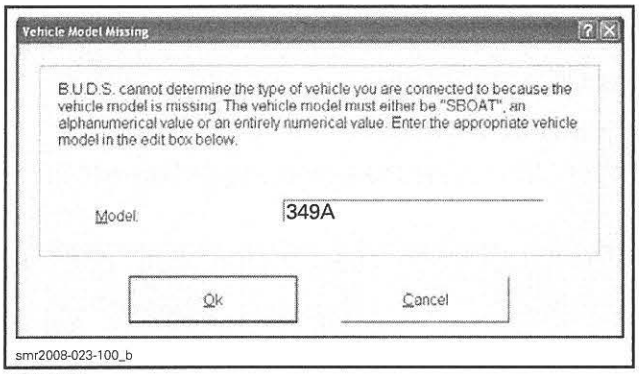

TYPICAL

6. Click the **Vehicle** tab and enter the information you recorded previously.
   1. Vehicle serial number
   2. Engine number (**do not** enter the "M" at the beginning of the engine number)
   3. Customer name.

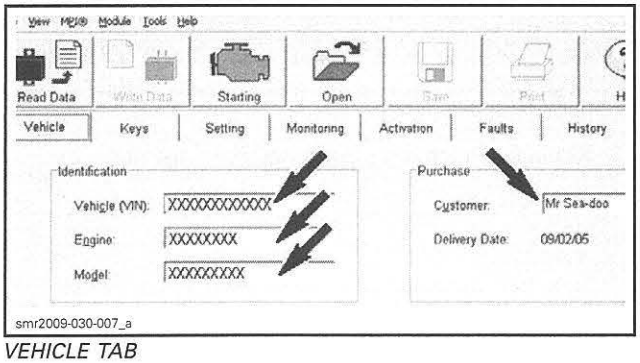

VEHICLE TAB

7. Click on the following tabs:
   - History
   - Part Replacement
   - Add Part in History.

8. Enter the **old** ECM serial number in the **Add Part In History** window.

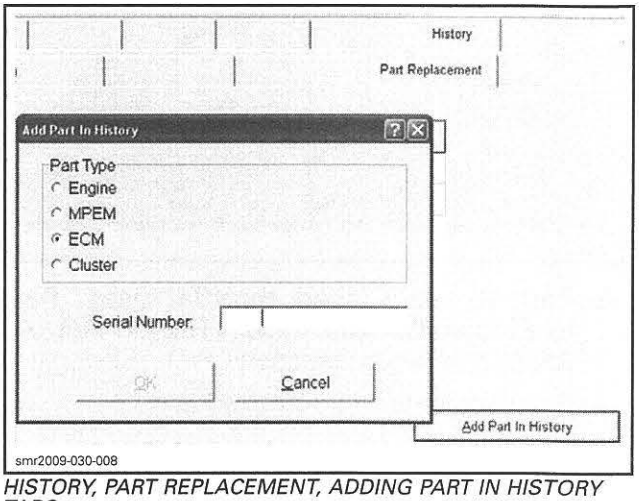

HISTORY, PART REPLACEMENT, ADDING PART IN HISTORY TABS

NOTE: The ECM serial number can be found on the ECM sticker that also identifies the part number.

9. Click the **Keys** tab and click on the **Erase All Keys** button.

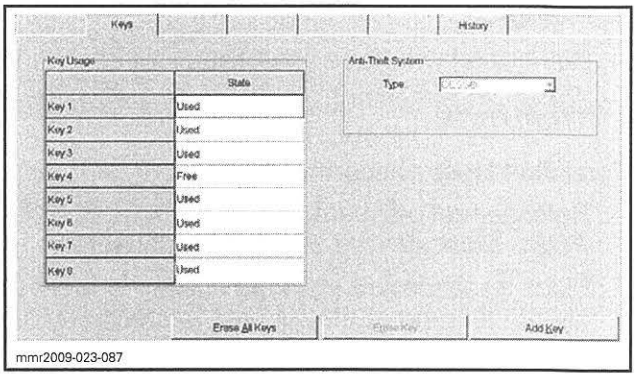

10. Program the desired D.E.S.S. key(s) to the watercraft. Refer to *D.E.S.S. SYSTEM* subsection.

NOTE: If you do not program at least one D.E.S.S. key to the watercraft, you will not be able to write the data to the new ECM, and will be prompted to do so.

11. Briefly press the vehicle START button to wake up the ECM. **Engine must not crank.**
12. Click on the **Write Data** button.

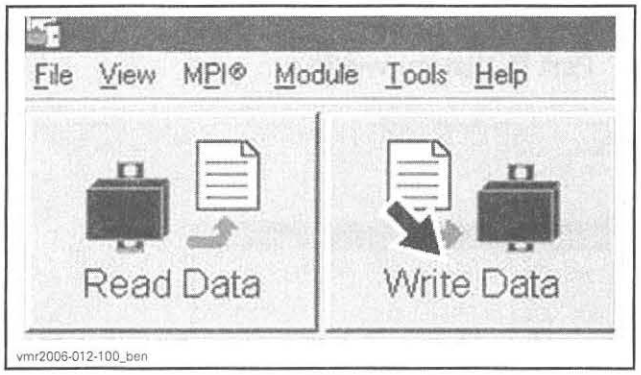

13. Perform the **Closed throttle** reset. Refer to **Closed Throttle Reset (TPS)** in *ADJUSTMENTS* in this subsection.
14. Reinstall remaining removed parts.

FUEL RAIL

Fuel Rail Removal

1. Open/remove seat.

Models with Suspension

2. Remove rear ventilation box. Refer to *BODY*.
3. Remove deck extension. Refer to *BODY*.

All Models

4. Pull out relay in fuse box to prevent fuel pump to turn on unexpectedly. Refer to *POWER DISTRIBUTION*.

Fuel Rail Hose Disconnection

1. Release fuel pressure. Refer to *FUEL PUMP* in *FUEL TANK AND FUEL PUMP* subsection.
2. Place an absorbent shop rag under the fuel supply hose fitting at the fuel rail to catch any fuel leakage.
3. Disconnect fuel hose from fuel rail using the FUEL HOSE DISCONNECT TOOL (P/N 529 036 037).

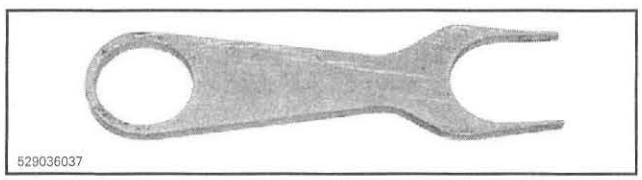

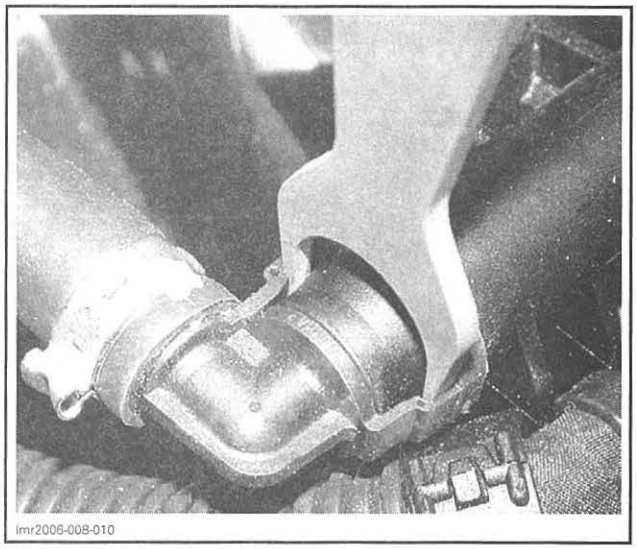

NOTE: It may be necessary to rotate fuel hose fitting to align the tool ends with the openings of the locking mechanism.

Fuel Rail Removal

1. Cut locking ties retaining engine harness to fuel rail.

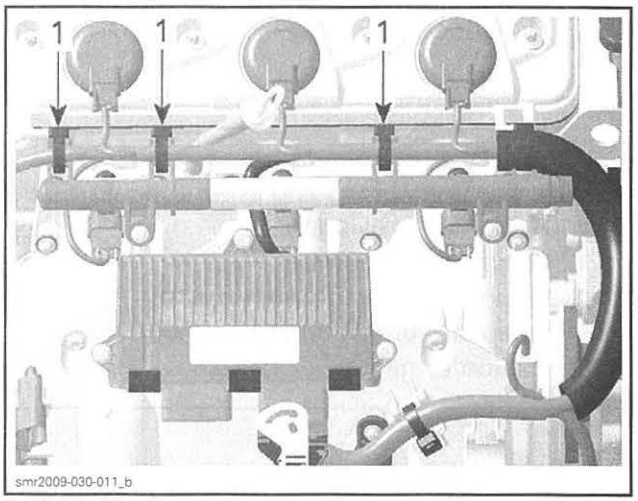

1. Cut locking ties

2. Remove screws retaining the fuel rail.

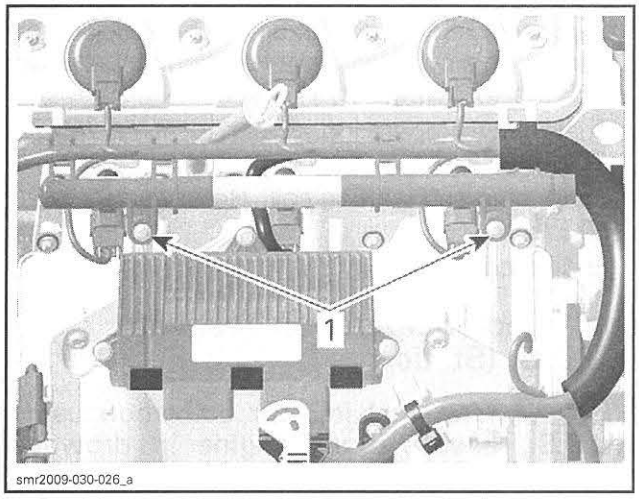

1. Retaining screws

3. Gently pull fuel rail side to side (wiggle).

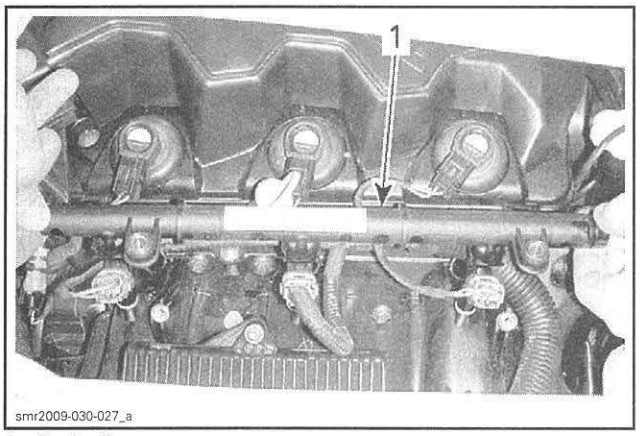

1. Fuel rail

4. Disconnect all injector connectors.
5. Pull fuel rail out with fuel injectors.

Fuel Rail Installation

Reverse the removal procedure. However, pay attention to the following.

1. Apply LOCTITE 243 (BLUE) (P/N 293 800 060) on fuel rail retaining screws.
2. Torque fuel rail retaining screws to 9 N•m (80 lbf•**in**).

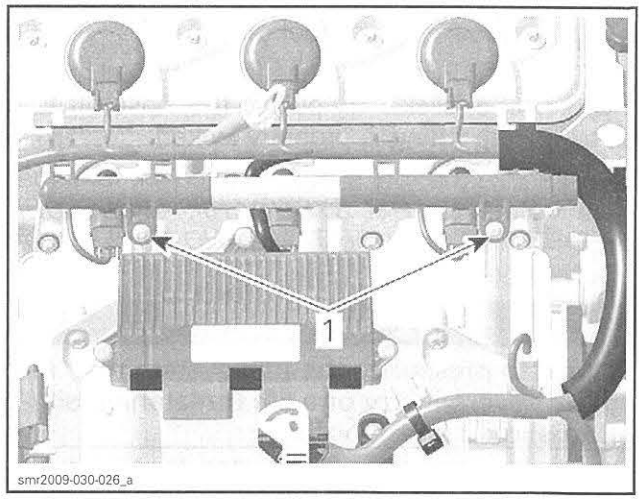

1. Retaining screws

3. Properly install new locking ties to secure engine harness to fuel rail.

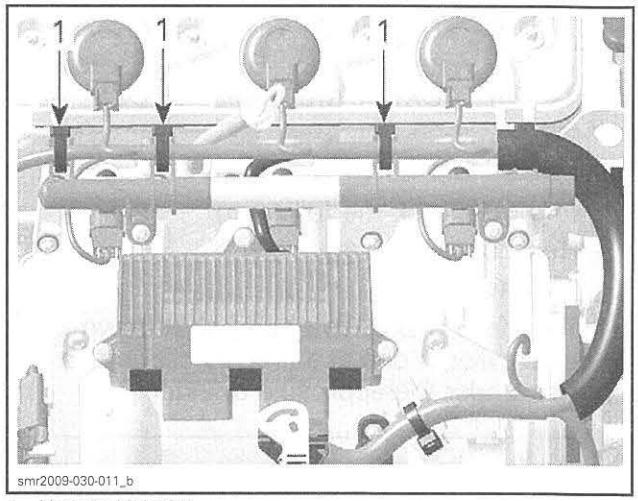

1. New locking ties

Fuel Rail Hose Connection

1. Apply engine oil on O-rings of fitting.

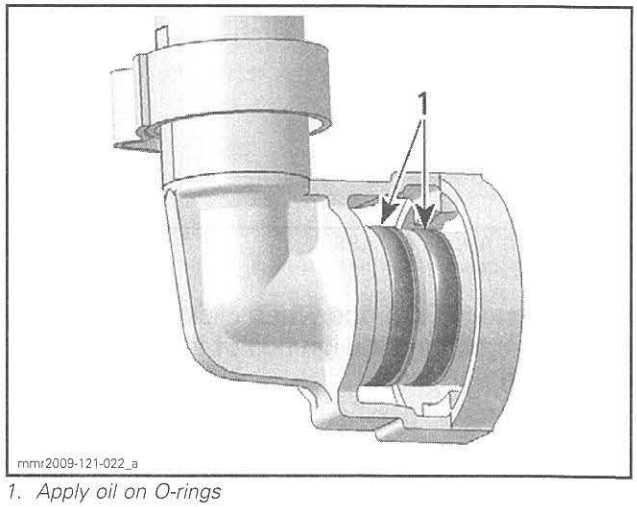

1. Apply oil on O-rings

2. Connect fuel hose to fuel rail.

IMPORTANT: Push fuel hose fitting on fuel rail until you hear a "click". Try pulling fuel hose off fuel rail to ensure fitting is properly locked.

3. Pressurize the fuel system and check for a fuel leak. Refer to *FUEL SYSTEM HIGH PRESSURE LEAK TEST* in *FUEL TANK AND FUEL PUMP* subsection.

⚠ WARNING

Failure to pressurize the fuel system may result in severe injury or a life threatening situation should a leak occur.

4. Reinstall all remaining removed parts.

FUEL INJECTOR

Fuel Injector Operation Test with B.U.D.S. (Dynamic)

1. Connect watercraft to B.U.D.S. software. Refer to *COMMUNICATION TOOLS AND B.U.D.S.*
2. Start engine.
3. In B.U.D.S., click the following:
   - **Read Data** button
   - **Monitoring** tab.
4. Using the B.U.D.S. software, shut down each engine cylinder one at a time by clicking on the button under the applicable cylinder.

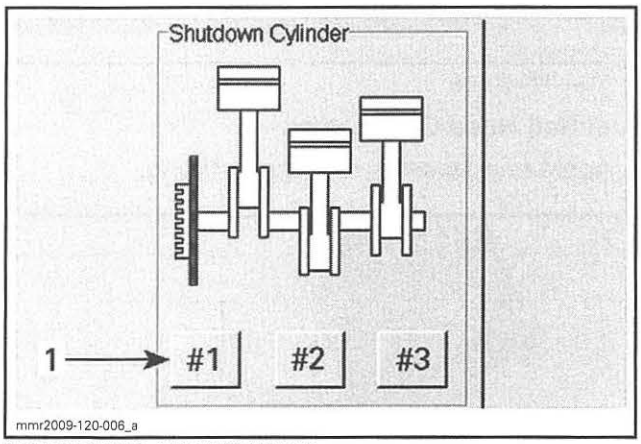

MONITORING AND ECM TABS
1. Click on cylinder number to be tested

If the engine RPM drops when clicking on a cylinder, the injector and the ignition of this cylinder are functioning normally.

If the engine RPM does not drop when clicking on a cylinder, this cylinder is not functioning properly. Check the following:

- Fuel injector operation. Refer to *FUEL INJECTOR OPERATION TEST.*
- Spark plug and ignition coil. Refer to *IGNITION SYSTEM.*
- Engine condition.

Fuel Injector Operation Test with B.U.D.S. (Static)

NOTICE **After fuel injector activation using B.U.D.S., always crank engine in drowned mode to ventilate engine and prevent a potential backfire due to fuel accumulation in the engine.**

1. Connect watercraft to B.U.D.S. software. Refer to *COMMUNICATION TOOLS AND B.U.D.S.*
2. Press the START button to wake up the ECM.
3. Install the tether cord on the engine cut-off switch.
4. In B.U.D.S., click the following:
   - **Read Data** button
   - **Activation** tab.
5. On the ECM Activation page, energize the fuel injector to be tested by clicking on it in B.U.D.S.

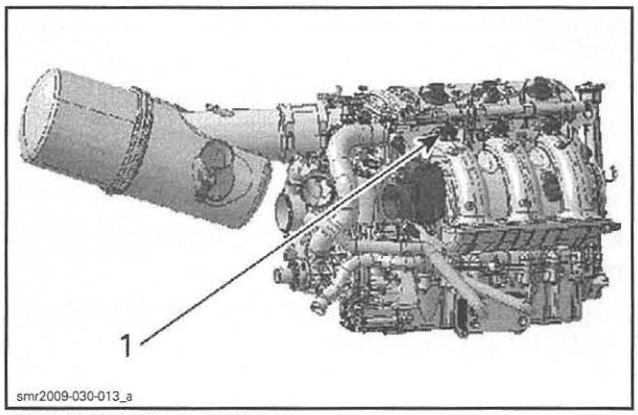

ACTIVATION AND ECM TABS
1. Injector of cylinder no. 1 shown

6. Listen to the injector.

If you can hear the injector, it validates its operation. Carry out the *FUEL INJECTOR BALANCE TEST.*

If you do not hear the injector, carry out the *INJECTOR INPUT VOLTAGE TEST.*

Fuel Injector Balance Test with B.U.D.S.

NOTICE After fuel injector activation using B.U.D.S., always crank engine in drowned mode to ventilate engine and prevent a potential backfire due to fuel accumulation in engine.

1. Install a fuel pressure gauge as described in *FUEL PUMP PRESSURE TEST* of *FUEL TANK AND FUEL PUMP* subsection.
2. Connect watercraft to B.U.D.S. software. Refer to *COMMUNICATION TOOLS AND B.U.D.S.*
3. Press the START button to wake up the ECM.
4. Install tether cord on engine cut-off switch.
5. In B.U.D.S., click the following:
   - **Read Data** button
   - **Activation** tab.
6. In B.U.D.S., click the **Fuel Pump** button to activate fuel pump.

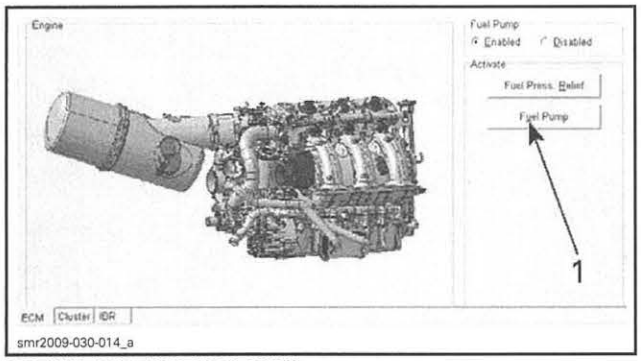

ACTIVATION AND ECM TABS
*1. **Fuel Pump** activation button*

7. Fuel pressure must be within specification. Refer to *FUEL TANK AND FUEL PUMP* subsection. Re-activate fuel pump as necessary.
8. In B.U.D.S., energize fuel injector **no. 1**.

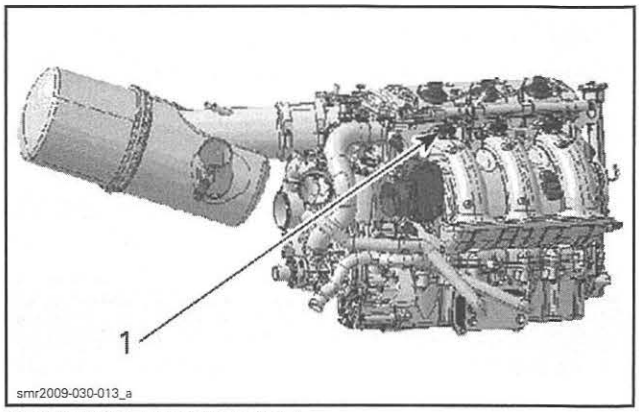

ACTIVATION AND ECM TABS
1. Injector of cylinder no. 1 shown

9. Record the fuel pressure drop for injector **no. 1**.
10. In B.U.D.S., click the **Fuel Pump** button to activate fuel pump.

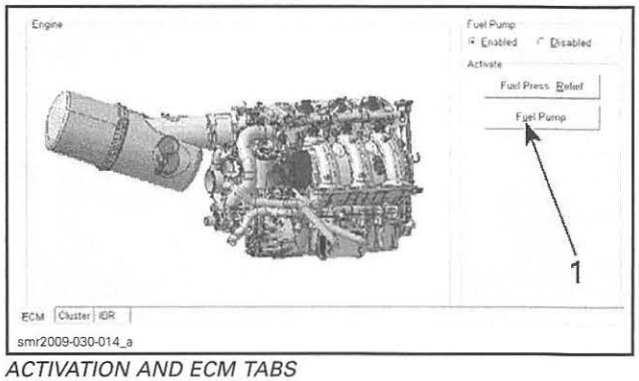

ACTIVATION AND ECM TABS
1. Fuel pump

11. Repeat the procedure for fuel injectors **no. 2** and **no. 3** and record the pressure drop for each injector.
12. The maximum fuel pressure drop between injectors should not exceed the following specification:

MAXIMUM FUEL PRESSURE DROP ALLOWED BETWEEN FUEL INJECTORS
10 kPa (1.5 PSI)

If pressure drop of any fuel injector is greater than the specification, replace that injector then repeat the test.

13. Using the valve on the fuel pressure gauge, release the pressure in the system (if so equipped).
14. Remove fuel pressure gauge and reinstall removed parts.

Fuel Injector Input Voltage Test

1. Open/remove seat.

Models with Suspension

2. Remove rear ventilation box. Refer to *BODY*.

All Models

3. Disconnect fuel injector connectors.

NOTE: Push against tab underneath connector as illustrated to unlock it.

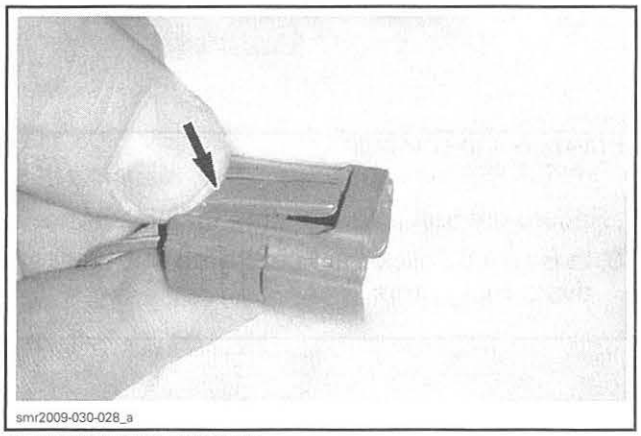

PUSH HERE TO UNLOCK

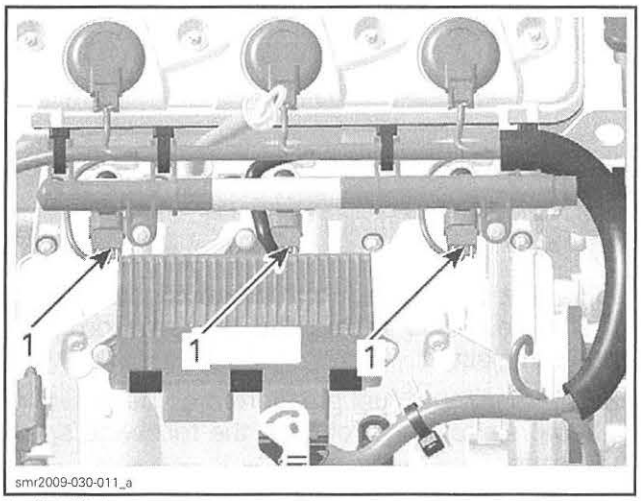

1. Fuel injector connectors

4. Press the START button to wake up the ECM.
5. Install tether cord on engine cut-off switch.
6. Use the FLUKE 115 MULTIMETER (P/N 529 035 868) and select Vdc.
7. Read input voltage to the applicable injector as per following table.

PROBE INJECTOR CONNECTOR	MEASUREMENT
VIOLET wire with a tracer to battery ground	Battery voltage

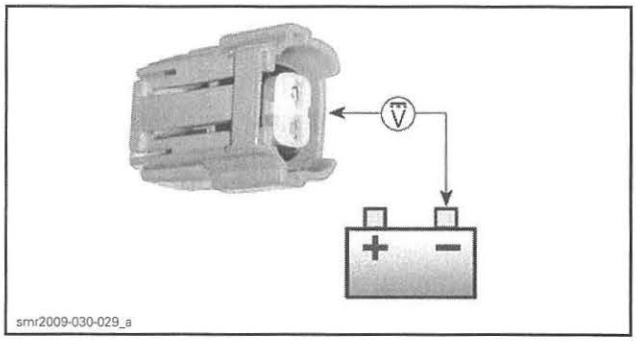

If battery voltage is measured, carry out the *INJECTOR CONTROL CIRCUIT TEST*.

If battery voltage is not measured, check continuity between fuse box and injector as follows.

Continuity Test of Injector Power Circuit

1. Remove cover of fuse box. Refer to *POWER DISTRIBUTION* subsection.
2. Remove the long bus bar.

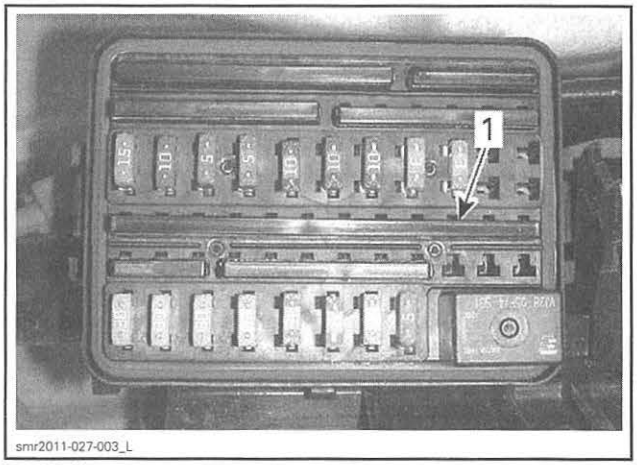

TYPICAL
1. Long bus bar

3. Use the FLUKE 115 MULTIMETER (P/N 529 035 868) and select Ω.
4. Read resistance of the applicable injector circuit as per following table.

INJECTOR	INJECTOR CONNECTOR	FUSE BOX	MEASUREMENT
1 (rear)	VIOLET wire with a tracer	Terminal D7	Close to 0 Ω
2		Terminal D6	
3		Terminal D5	

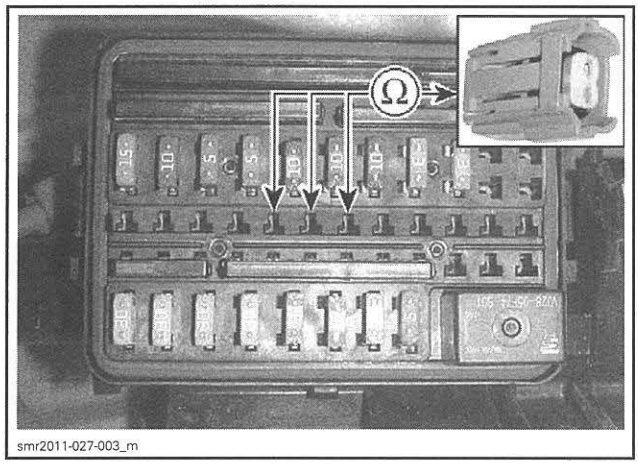

If continuity is good, the fuse, wiring and connectors are functional.

If continuity is not obtained, first check the fuse and replace as required.

5. If fuse is good, repair/replace wiring and connectors from fuse box to injector. Refer to *WIRING DIAGRAM* subsection.
6. Reinstall bus bar and cover.

Fuel Injector Control Circuit Test

1. Disconnect ECM "A" connector.
2. Install ECM ADAPTER TOOL (P/N 529 036 166) on ECM connector.
3. Use the FLUKE 115 MULTIMETER (P/N 529 035 868) and select Ω.
4. Probe terminals as per following table.

INJECTOR	ECM ADAPTER	INJECTOR	MEASUREMENT
1 (rear)	Pin A-B3	BROWN wire with a tracer	Close to 0 Ω
2	Pin A-K1		
3	Pin A-J1		

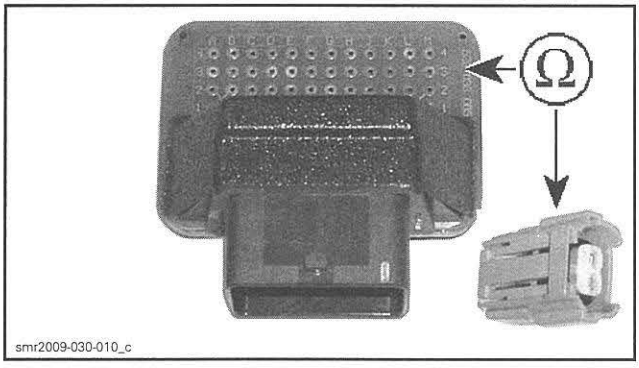

If control circuit is at fault, repair or replace wiring and connectors.

If control circuit and all tests applicable to the injector are good, try a new ECM. Refer to *ECM*.

Fuel Injector Resistance Test (at ECM Connector)

1. **Reconnect** the injector connector.
2. Disconnect the ECM "A" connector.
3. Install ECM ADAPTER TOOL (P/N 529 036 166) on ECM connector.
4. Remove the long bus bar from fuse box.

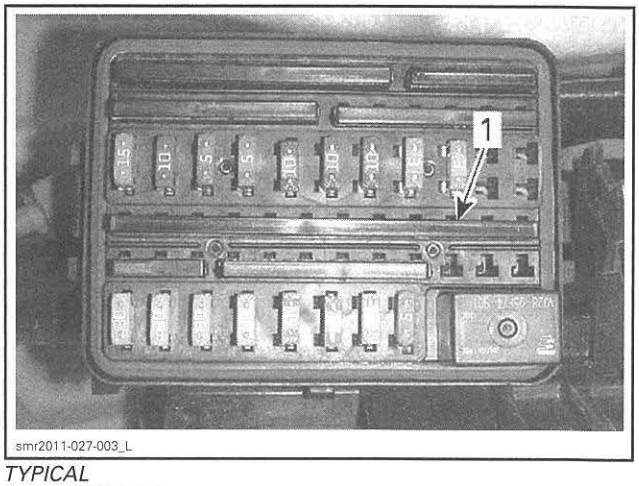

TYPICAL
1. Long bus bar

5. Use the FLUKE 115 MULTIMETER (P/N 529 035 868) and select Ω.
6. Measure resistance value between terminals as follows.

INJECTOR	FUSE BOX TERMINAL	ECM ADAPTER PIN	RESISTANCE @ 20°C (68°F)
1	D7	A-B3	11.4 - 12.6 Ω
2	D6	A-K1	
3	D5	A-J1	

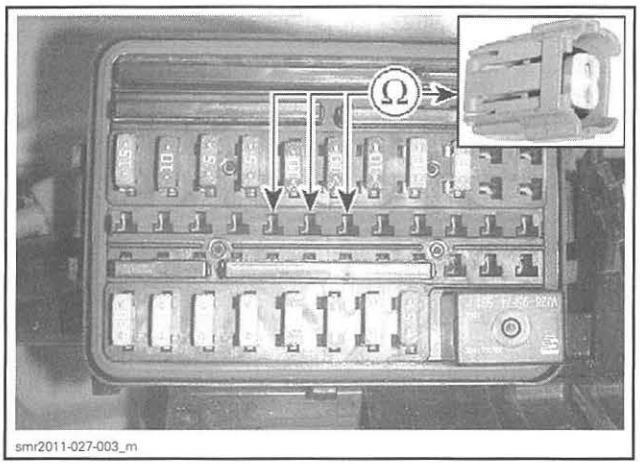

If resistance values are as specified, injector coil is in good condition.

If resistance value are not as specified, repeat test at injector connector.

7. Reinstall bus bar and fuse box cover.

Fuel Injector Resistance Test (at Component)

1. Remove injector connector.
2. Check resistance value between injector pins as per followings table.

INJECTOR PIN		RESISTANCE @ 20°C (68°F)
1	2	11.4 - 12.6 Ω

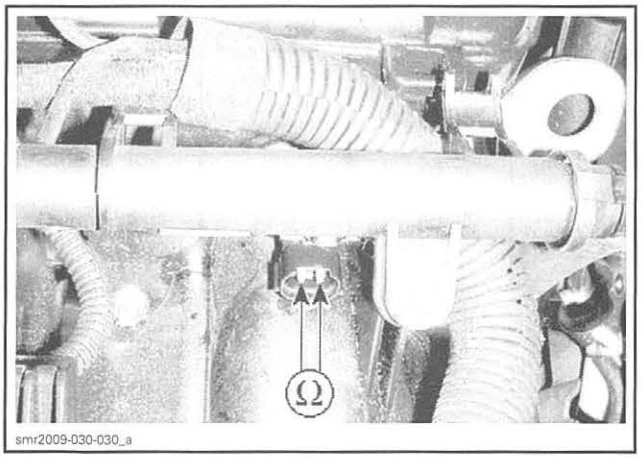

If readings are not as specified, replace injector.

If readings are as specified, repair or replace wiring and connectors from ECM to injector.

Fuel Injector Removal

1. Remove fuel rail. Refer to *FUEL RAIL* in this subsection.
2. Remove the injector clip.

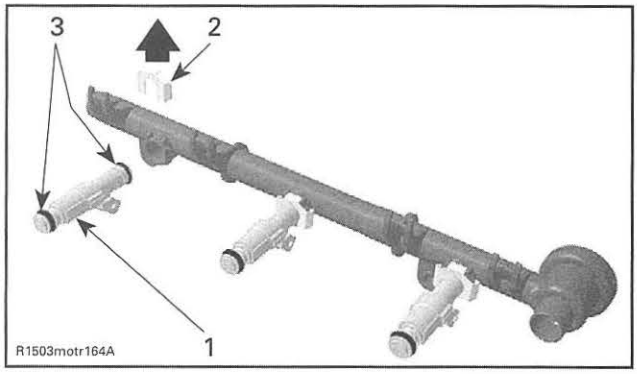

FUEL RAIL ASSEMBLY
1. *Fuel injector*
2. *Injector clip*
3. *O-ring*

3. Pull the fuel injector out of the fuel rail.

Fuel Injector Installation

Installation is the reverse of the removal procedure. However, pay attention to the following details.

FUEL INJECTOR IDENTIFICATION	
ENGINE	INJECTOR COLOR CODE
100/130	Red
155/215/260	Blue

1. If you reinstall a used injector, carefully inspect O-ring condition before reinstallation. Replace O-ring with a new one if damaged.
2. Apply a thin film of engine oil to O-rings.
3. Insert the fuel injector in the fuel rail.
4. Secure injector to fuel rail with a retaining clip.
5. Install fuel rail on engine. Refer to *FUEL RAIL* in this subsection.
6. Pressurize the fuel system and check for a fuel leak. Refer to *FUEL SYSTEM HIGH PRESSURE LEAK TEST* in *FUEL TANK AND FUEL PUMP* subsection.

⚠ WARNING

Always carry out a fuel system high pressure leak test after working on the fuel system.

7. Reinstall all remaining removed parts, refer to applicable subsections.

THROTTLE BODY

Throttle Body Description

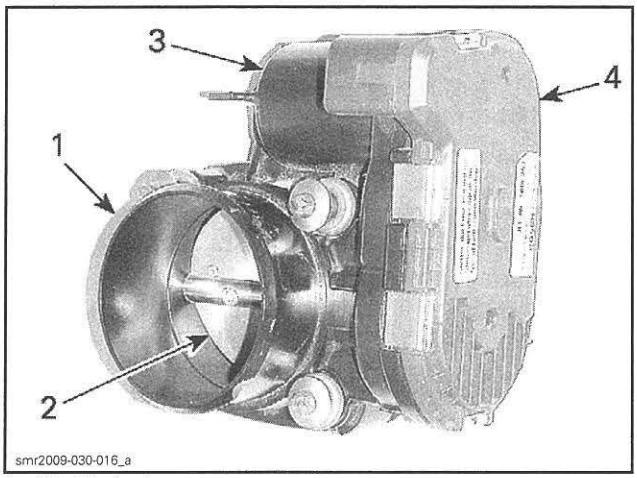

1. *Throttle body*
2. *Throttle plate*
3. *Throttle actuator (electric motor inside)*
4. *Throttle position sensor (TPS) (inside)*

Electronic Throttle Actuator

The electronic throttle actuator (ETA) is a DC motor on the throttle body that regulates the throttle plate via a drive gear. Pulse width modulation (PWM) is used to control the motor.

Throttle Plate Operating Positions

Two torsional springs are connected to the throttle plate. A main spring and another one in a plunger mechanism.

When there is no power to the throttle actuator (ETA), the plunger mechanism maintains the throttle plate at a rest position. This also serves as the limp home position.

When the throttle plate is opened by the ETA as commanded by the ECM, it acts against the main spring. If the ETA failed, the return spring would bring the throttle plate back to the limp home position.

ECM	ENGINE	THROTTLE BODY
OFF	Stopped	Throttle actuator: Off. Throttle plate: Rest position, maintained opened at approximately 8° (1). This is also the limp home position.
ON	Not started	Throttle actuator: On. Throttle plate: Moves from the rest position to approximately 14°. It then moves back to the rest position. This is the diagnostic mode where the rest position, actuator opening force to overcome the return springs and the motor return rate are monitored. If any of these parameters are out of range, a fault code is initiated.
ON	Started. Normal operation at idle	Throttle actuator: On. Throttle plate: Moves from the rest position to idle position (approximately 1-3°) according to ECM injection and ignition maps. Throttle plate is opened and closed as necessary to control the idle speed.
ON	Started. Normal operation at various RPM	Throttle actuator: On. Throttle plate: Opens and closes according to ECM torque management priorities.
(1) Degree values are given from the fully closed position.		

Throttle-Body Faults and Effects

NOTE: Among other things, a weak or broken spring and a sticky throttle plate (carbon build-up, dried salt water etc) are validated by the throttle body diagnostic mode.

FAULT	EFFECT
Partial failure of TAS sensor (one internal sensor only)	Limp home mode. Engine speed limited to idle. ECM will use the remaining TAS sensor. Fault code set and beeper activated to emit warning signals. Check engine light is turned ON. Driveability could be reset by releasing and reapplying the throttle.
Complete failure of TAS sensor (both internal sensors)	Limp home mode. Engine speed limited to 2500 RPM. Fault code set and beeper activated to emit warning signals. Check engine light is turned ON.
Any throttle body failure	Limp home mode. Engine speed limited to 2500 RPM. Engine speed can still be increased up to 3200 RPM using the throttle lever. Fault code set and beeper activated to emit warning signals. Check engine light is turned ON.
NOTE: When one of these faults is active, O.T.A.S. and iBR will continue to monitor their input signals. However, since the engine speed is limited, the O.T.A.S. will not be activated. Also, since the ECM cannot control the throttle body, the iBR may produce a fault since the ECM does not react to its specific torque requests. It all depends on the circumstances when the iBR is applied. (vehicle and engine speed will be a factor).	

Throttle Body Lubrication

No lubrication is required.

Throttle Body Cleaning

1. Remove the parts required to access the throttle body, refer to *THROTTLE BODY REMOVAL*.
2. Check throttle body cleanliness using a flashlight. Fully open throttle plate and verify:
- Throttle body bore
- Throttle plate edge.

Look for:
- Dirt
- Oily surfaces
- Carbon and salt deposits on throttle plate and the surrounding bore.

3. Clean as necessary.
4. Use a throttle body cleaner such as GUNK INTAKE MEDIC or an equivalent.

NOTICE **Only use an appropriate throttle body cleaner that will not damage O-rings and EFI sensors.**

⚠ WARNING

Use the product in well ventilated area. Refer to product manufacturer's warnings. Wipe off any product leakage in bilge.

5. To avoid getting dirt into engine, spray cleaner on a clean rag (outside the bilge) then rub rag against throttle plate and bore. A toothbrush works well too.

⚠ WARNING

First ensure ECM is off. Otherwise, if ECM should suddenly turn off, it would quickly close the throttle plate which could cause serious finger injury.

6. Manually open throttle and hold fully open to reach all surfaces.

⚠ WARNING

Ensure nobody presses the START button. The ECM would turn on and the throttle actuator (ETA) would cycle. This could cause serious finger injury as the throttle plate moves quickly.

7. To remove residual dirt, spray cleaner on throttle plate and on bore.
8. Reinstall removed parts.

Throttle Body Actuator (ETA) Test

Throttle Body Actuator (ETA) Test with B.U.D.S.

NOTE: Use the **Setting** page, to confirm ETA movement. The **Monitoring** page will not read the actual ETA movement.

1. Enable electrical system.
2. Connect vehicle to the latest B.U.D.S. version.
3. Select the **Setting**, then **ECM** tabs.
4. Slowly depress the throttle lever from the idle to WOT. The ETA should go from 0% to 100%.

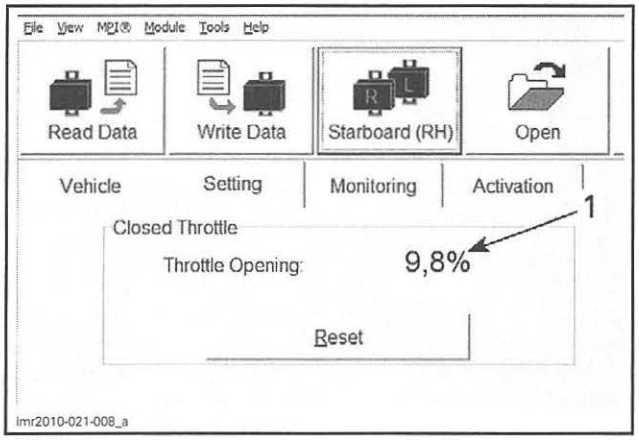

TYPICAL
1. ETA position

If result is out of specification, carry out a *CLOSED THROTTLE RESET*. Refer to *ADJUSTMENT* in this subsection.

NOTE: The ETA is reset at the same time as the TPS.

After the reset, test ETA again.

If the result is still out of specification, check wire continuity between ECM and throttle body before assuming the ETA is at fault.

Throttle Body Inspection

Always check for corroded terminals or damaged wiring when diagnosing throttle body problems.

Throttle Body Dynamic Tests

1. Remove the parts required to access the throttle body, refer to *THROTTLE BODY REMOVAL*.
2. Remove the air inlet hose from the throttle body.
3. Observe the throttle plate with the engine stopped.

NOTE: The throttle plate should be in the rest position (slightly opened).

⚠ WARNING

Keep your fingers out of the throttle plate area while the ECM turns on. The throttle actuator will cycle. This could cause serious finger injuries as throttle plate quickly moves.

4. As you observe the throttle plate, have someone press the START button to wake up the ECM.

NOTE: The throttle plate should cycle quickly from the rest position to a partially open position (approximately 14°), then back to the rest position.

5. Install the tether cord on the engine cut-off switch.

NOTE: The throttle plate should cycle again.

6. As you observe the throttle plate, have someone gradually and evenly pull in the throttle lever, then release it in the same way.

NOTE: The throttle plate should open then close according to throttle lever position.

If any test failed, proceed with the *STATIC TESTS*.

Throttle Body Static Tests

⚠ WARNING

First ensure the ECM is off. Otherwise, if ECM should turn off, it would quickly close the throttle plate which could cause serious finger injury.

⚠ WARNING

During the test, ensure nobody presses the START button. The ECM would turn on and cycle the throttle actuator. This could cause serious finger injuries as the throttle plate moves quickly.

1. Using your fingers, push in on the throttle plate and ensure it opens smoothly within the throttle body.

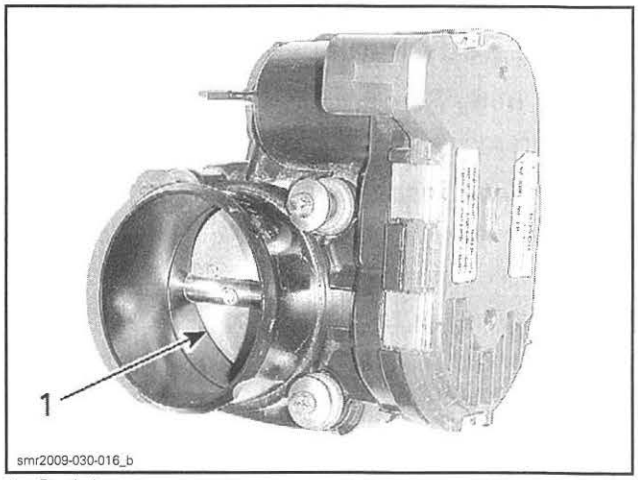

1. Push here to open

NOTE: The throttle plate must open fully and return freely to the rest position (slightly opened) when released.

2. Push throttle plate closed as indicated in following illustration. It must close completely and return freely to the rest position (slightly opened) when released.

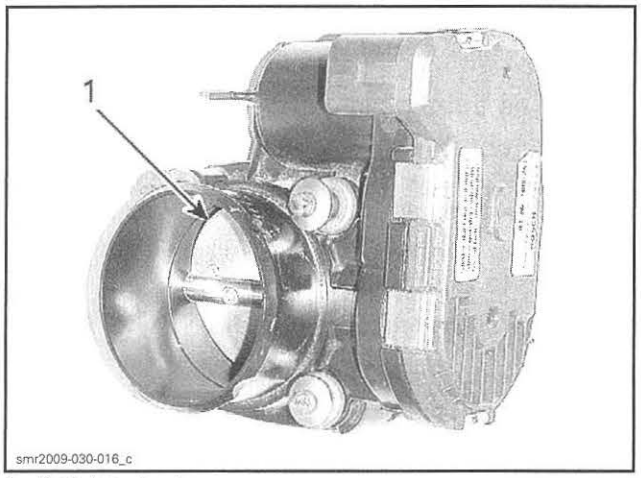

1. Push here to close

If the throttle plate does not move smoothly or does not return freely to the rest position, the problem is mechanical. Check for salt accumulation on throttle plate shaft. It may also be an actuator or gear problem. Replace throttle body as necessary.

If throttle plate operates normally, the problem is electrical. Check throttle actuator (ETA) wiring continuity, throttle position sensor (TPS) and throttle accelerator sensor (TAS).

⚠ WARNING

Replace throttle body when throttle plate does not return properly.

Throttle Body Replacement

Throttle Body Removal

1. Open/remove seat.

Models with Suspension

2. Remove rear ventilation box. Refer to *BODY*.
3. Remove deck extension. Refer to *BODY*.
4. Lift suspension to gain access.

NOTE: If more height is required or if the suspension electronic control cannot be used, manually lift suspension by the anchor points close to handlebar and safely block in this position. Do not lift the watercraft from the anchor points.

All Models

5. Disconnect inlet hose from throttle body.
6. Disconnect throttle body connector.

To remove connector from throttle body, press connector locking tab illustrated.

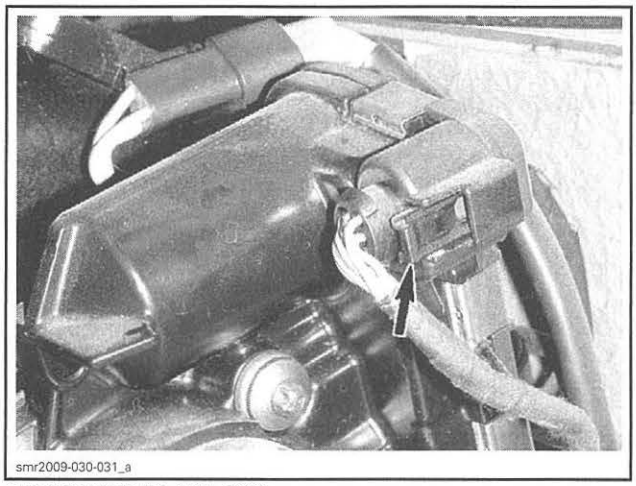

PRESS HERE TO UNLOCK

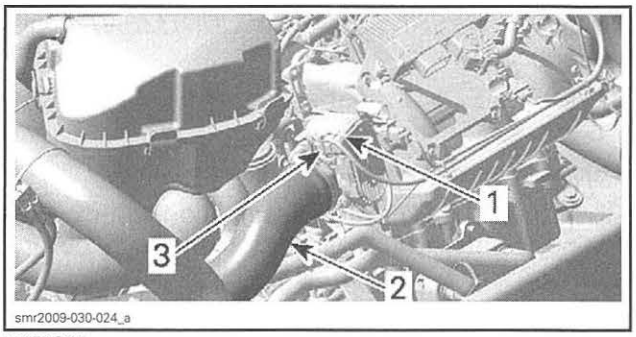

TYPICAL
1. Throttle body
2. Inlet hose
3. Connector

7. Remove retaining screws from throttle body.

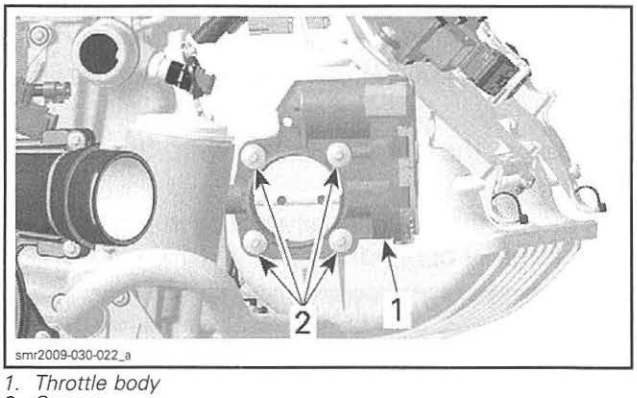

1. Throttle body
2. Screws

8. Pull throttle body off intake manifold.

Installation

Installation of the new throttle body is the reverse of the removal procedure. However, pay attention to the following.

1. Torque retaining screws in a criss-cross sequence to 9 N•m (80 lbf•**in**).

2. Perform the **Closed Throttle** reset. See procedure in *ADJUSTMENTS*.

TPS (THROTTLE POSITION SENSOR)

General

NOTE: The TPS is part of the throttle body.

The throttle position sensor (TPS) is a double potentiometer that sends a signal to the ECM that is proportional to the throttle plate angle. The TPS is located inside the throttle body.

TPS Wear Test

1. With the engine turned off, slowly pull in throttle lever and pay attention for smooth operation without physical stops.
2. Press the START button to wake up the ECM.
3. Install the tether cord on the engine cut-off switch.
4. Connect watercraft to B.U.D.S. software. Refer to *COMMUNICATION TOOLS AND B.U.D.S.* subsection.
5. In B.U.D.S., click the following:
   - **Monitoring** tab
   - **ECM** tab.
6. Slowly and regularly depress the throttle lever.
7. Observe the **Throttle Opening** needle movement in B.U.D.S.

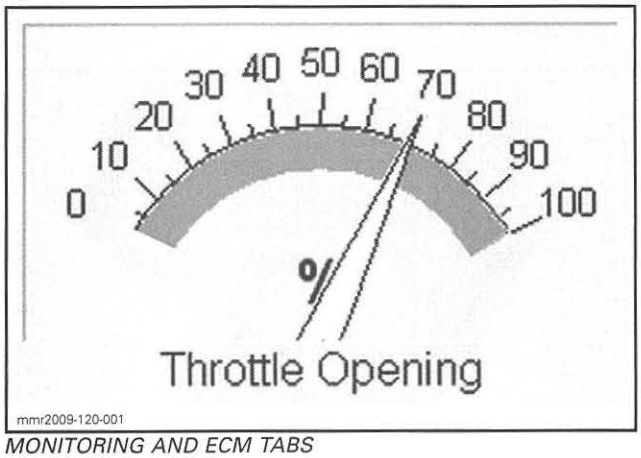

MONITORING AND ECM TABS

NOTE: The needle should move gradually and regularly as you move the throttle lever. If the needle "sticks", bounces or suddenly drops, it may indicate a worn TPS that needs to be replaced. An initial slight delay after the throttle lever is pulled and before the needle starts to move is normal.

If the needle behavior is not as expected, proceed with the following steps.

8. Manually move the throttle plate in throttle body using a blunt tool (without sharp tip).

⚠ WARNING

Do not move throttle plate with your fingers. Otherwise, if ECM should turn off, it would quickly close the throttle plate which could cause serious finger injury.

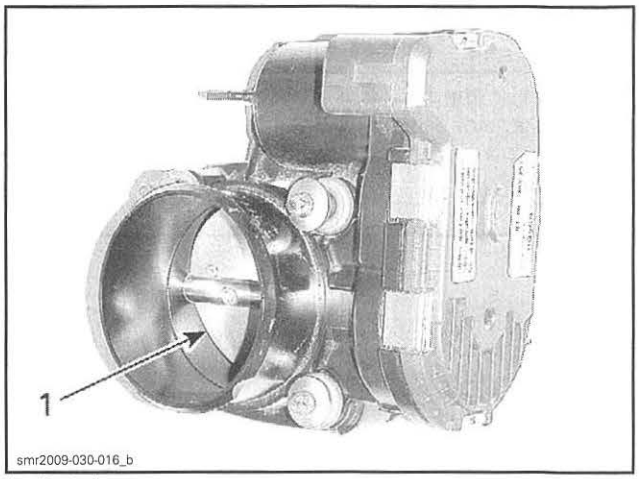

1. Push here

9. Check needle movement again.

- If needle moves as expected, check the throttle accelerator sensor (TAS). Refer to *THROTTLE ACCELERATOR SENSOR (TAS)* in this subsection.
- If needle does not move as expected, perform the *TPS VOLTAGE TEST* and the *TPS RESISTANCE TEST* in this subsection.

TPS Resistance Test

1. Remove the parts required to access the throttle body, refer to *THROTTLE BODY REMOVAL* in this subsection.
2. Ensure the throttle body connector is properly connected.
3. Disconnect ECM connector "A" from the ECM.
4. Use the FLUKE 115 MULTIMETER (P/N 529 035 868) and select Ω.
5. Probe circuit as per following table while using a finger to manually move throttle plate.

ECM ADAPTER		FULLY CLOSED THROTTLE PLATE (1)		FULLY OPEN THROTTLE PLATE	
		RESISTANCE (Ω)			
PIN		MIN.	MAX.	MIN.	MAX.
A-A2	A-K4	875	1625	875	1625
A-A2	A-K3	954	1934	228	585
A-A2	A-F3	254	634	980	1983
A-K3	A-K4	228	585	954	1934
A-K3	A-F3	1385	2315	1385	2315
A-K4	A-F3	980	1983	254	634

(1) To obtain the fully closed position, it is necessary to push against the throttle plate in the throttle body with a finger and hold it in this position for the measurement.

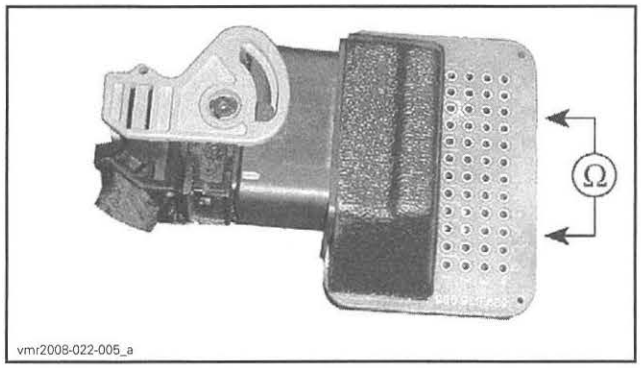

If any resistance value is incorrect, check wire continuity between ECM and throttle body before assuming the TPS is at fault. Refer to *WIRING DIAGRAM* subsection.

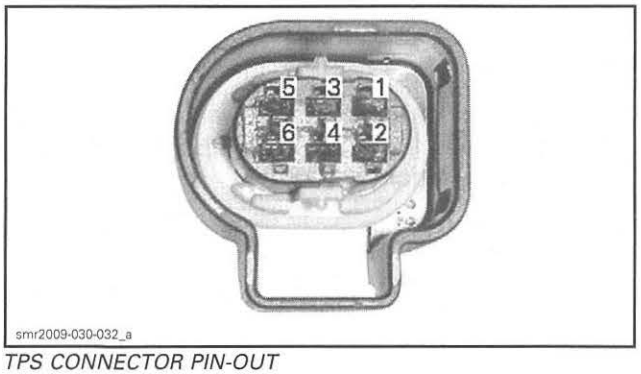

TPS CONNECTOR PIN-OUT

If the TPS resistance values are correct, try a new ECM. Refer to *ENGINE CONTROL MODULE (ECM)* in this subsection.

CRANKSHAFT POSITION SENSOR (CPS)

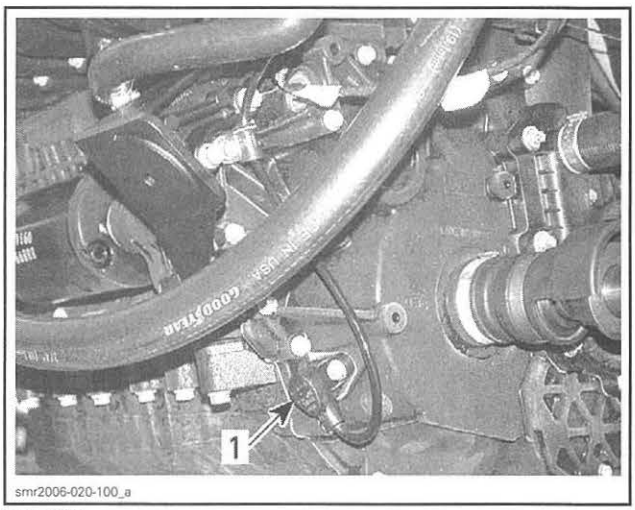

TYPICAL
1. Crankshaft Position Sensor (CPS)

NOTE: Take into account that a CPS fault can be triggered by a bent or missing trigger wheel tooth. First check for fault codes, then test the CPS as per following procedure. If it tests good, check trigger wheel teeth condition. Refer to *PTO HOUSING AND MAGNETO* in the *ENGINE* section.

CPS Voltage Test

1. Remove the required parts to access the CPS, refer to *CPS REPLACEMENT.*
2. Disconnect CPS connector.

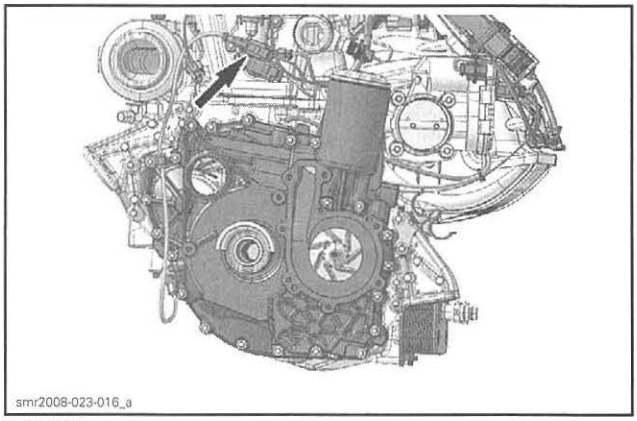

TYPICAL

3. Press the START button to wake up the ECM.
4. Install the tether cord on the engine cut-off switch.
5. Pull the throttle lever completely in to the handlebar and hold (drowned mode).

6. While cranking the engine, probe CPS terminals.

CPS CONNECTOR		MEASUREMENT
PIN		VOLTAGE
1	2	Approximately 2.3 Vac

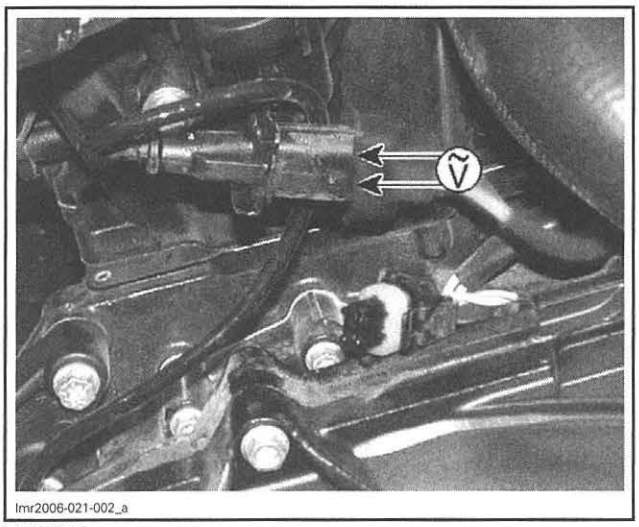

TYPICAL

If voltage is not as specified, carry out a *CPS RESISTANCE TEST*.

If voltage is as specified, check continuity of wiring between CPS connector and ECM connector. Refer to *WIRING DIAGRAM*.

CPS Resistance Test

1. Disconnect CPS connector.
2. Using a FLUKE 115 MULTIMETER (P/N 529 035 868) set to Ω, probe CPS terminals as per following table.

CPS CONNECTOR		MEASUREMENT
PIN		RESISTANCE Ω @ 20°C (68°F)
1	2	700 - 900 Ω

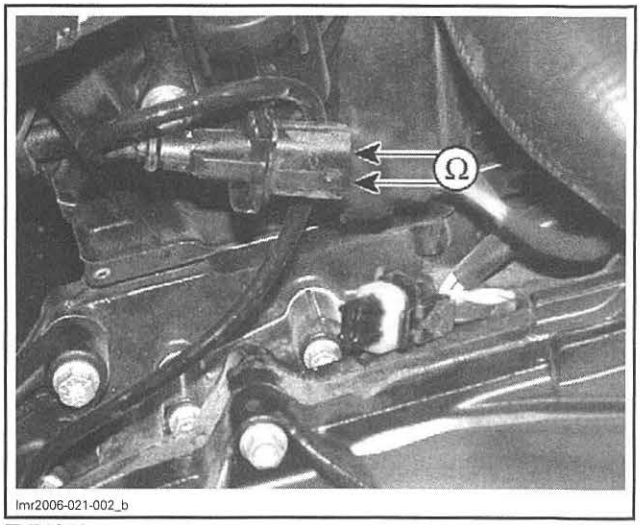

TYPICAL

If resistance is not within specifications, replace the CPS.

If resistance tests good, proceed with the following steps.

3. Reconnect the CPS and disconnect ECM connector "A" from the ECM.
4. Install the ECM ADAPTER TOOL (P/N 529 036 166) on ECM connector "A".
5. Test circuit resistance through CPS as per following table.



ECM ADAPTER		MEASUREMENT
PIN		RESISTANCE Ω @ 20°C (68°F)
A-H1	A-K2	700 - 900 Ω

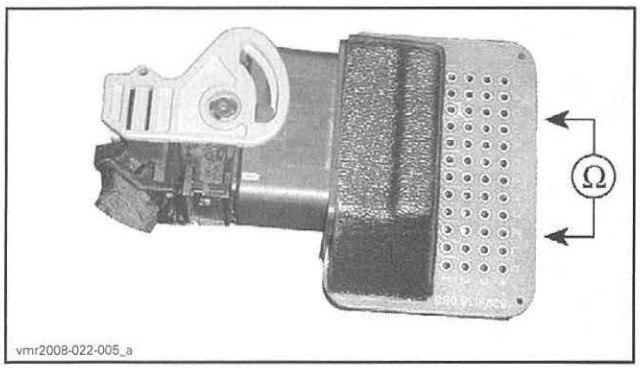

If resistance measured is as specified, check ECM. Refer to *ENGINE CONTROL MODULE (ECM)* in this subsection.

If resistance measured is not as specified, repair or replace wiring and connectors between ECM and the CPS.

CPS Replacement

1. Open/remove seat.

Models with Suspension

2. Remove rear ventilation box. Refer to *BODY*.
3. Remove deck extension. Refer to *BODY*.

All Models

4. Remove air intake silencer. Refer to *AIR INTAKE SYSTEM*.
5. Drain oil from PTO housing. Refer to *PTO HOUSING AND MAGNETO*.

NOTE: It is not necessary to drain oil from engine.

6. Disconnect CPS connector.

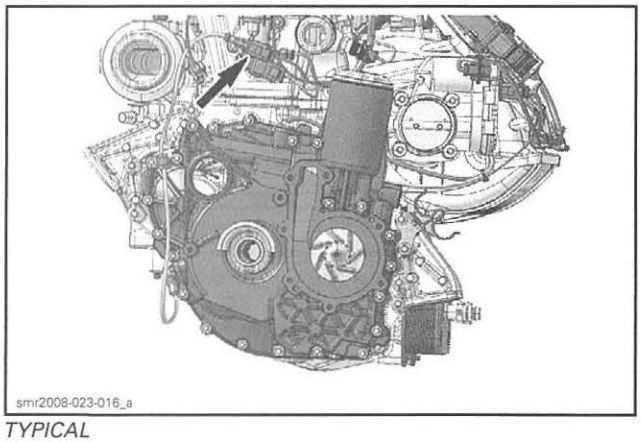

TYPICAL

7. Remove wire retaining clip (as applicable).
8. Remove CPS retaining screw.

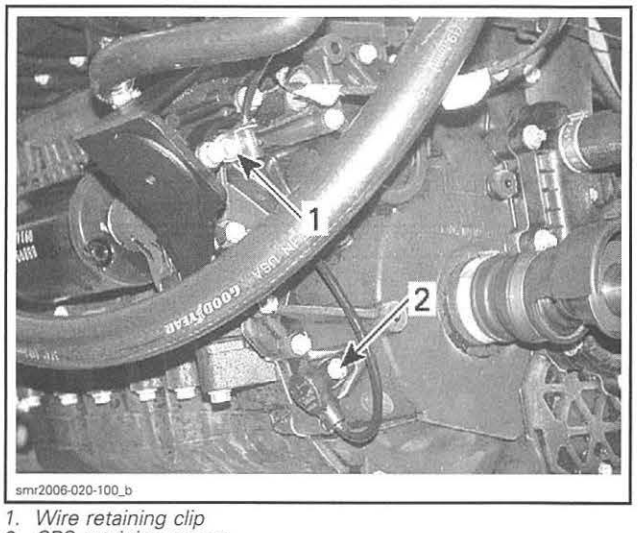

1. Wire retaining clip
2. CPS retaining screw

9. Pull out CPS.

Installation is the reverse removal procedure. However, pay attention to the following.

10. Apply LOCTITE 243 (BLUE) (P/N 293 800 060) on CPS retaining screw threads, then torque to 9 N•m (80 lbf•**in**).
11. Refill engine oil and check oil level, refer to *LUBRICATION SYSTEM* subsection.

Trigger Wheel Inspection

Refer to *PTO HOUSING AND MAGNETO* in the *ENGINE* section.

CAMSHAFT POSITION SENSOR (CAPS)

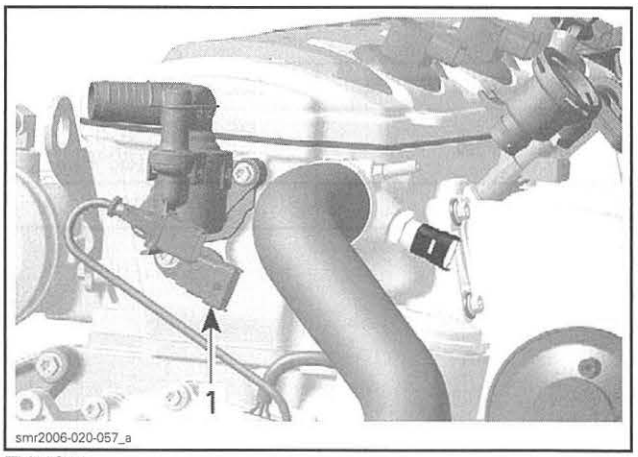

TYPICAL
1. CAPS

CAPS Voltage Test (Harness Side)

1. First check fuse F12 in fuse box. Replace as required.

2. Remove the parts required to access the CAPS, refer to *CAPS REPLACEMENT.*
3. Disconnect CAPS connector.

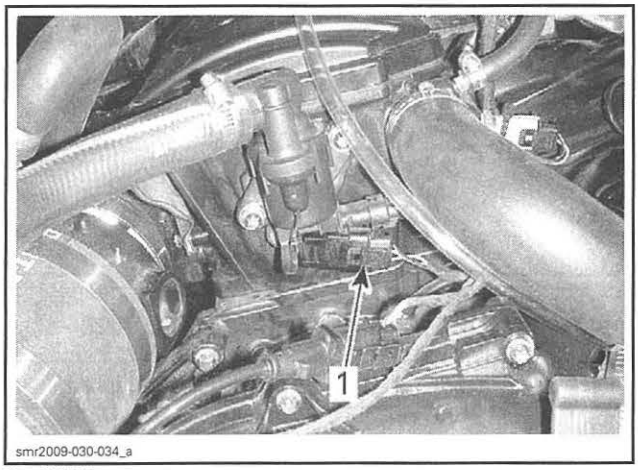

1. CAPS connector

4. Press the START button to wake up the ECM.
5. Install tether cord on engine cut-off switch.
6. Probe harness connector terminals as per following table.

CAPS CONNECTOR		MEASUREMENT
PIN		VOLTAGE
3	1	Battery voltage

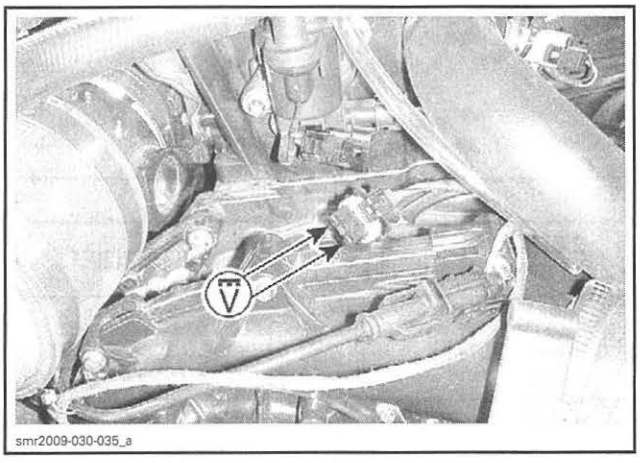

If battery voltage is read, proceed with *CAPS DYNAMIC TEST* further in this subsection.

If battery voltage is not read, probe circuit as per following table.

CAPS CONNECTOR		MEASUREMENT
PIN		VOLTAGE
3	Battery ground	Battery voltage

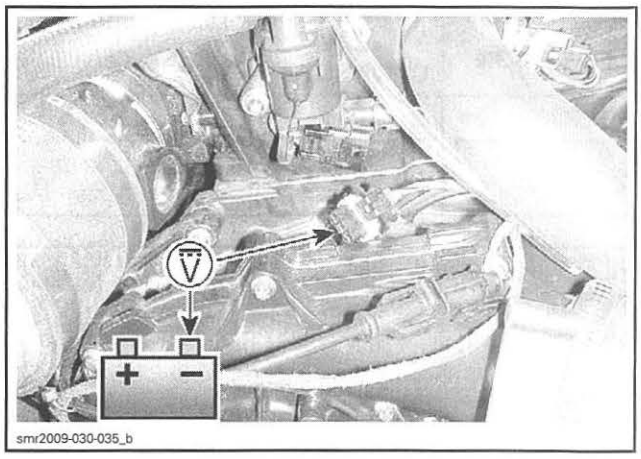

If voltage is read to battery ground, check continuity of ground circuit between CAPS pin 1 and ECM connector "A" pin E2. Repair or replace wiring and connectors.

If voltage is not read to battery ground, carry out a *CONTINUITY TEST OF CAPS POWER CIRCUIT.*

Continuity Test of CAPS Power Circuit

1. Remove cover from fuse box. Refer to *POWER DISTRIBUTION.*
2. Remove the long bus bar.

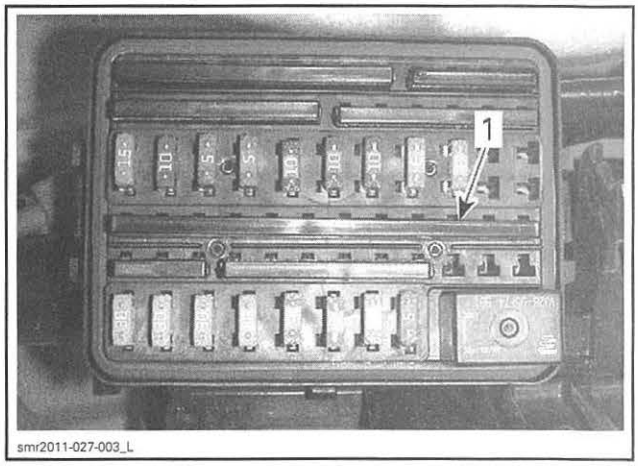

1. Pull out

3. Use the FLUKE 115 MULTIMETER (P/N 529 035 868) and select Ω.
4. Read resistance of the CAPS circuit as per following table.

FUSE BOX	CAPS CONNECTOR	RESISTANCE
TERMINAL	PIN	Ω
D8	3	Close to 0 Ω (continuity)

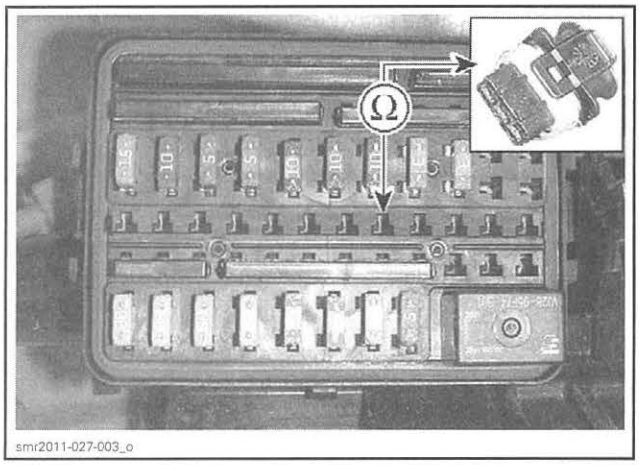

smr2011-027-003_o

If continuity is good, wiring and connectors are functional.

If a high resistance or an open circuit is measured, check the short bus bar in fuse box, repair or replace wiring and connectors from fuse box terminal to CAPS connector.

5. Reinstall bus bar and cover.

CAPS Dynamic Test

1. Remove the parts required to access the CAPS, refer to *CAPS REPLACEMENT.*
2. Remove CAPS sensor from engine.
3. Back-probe connector and read voltage as follows.

NOTE: To safely probe wire terminals through the back of the connector, use FLUKE AUTOMOTIVE BACK PROBE PIN (P/N TP40) or equivalent.

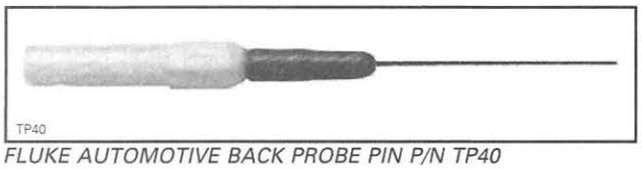
TP40

FLUKE AUTOMOTIVE BACK PROBE PIN P/N TP40

NOTICE **Do not use sharp end probes. They could damage the connector seal.**

Probes can be inserted at the end of the FLUKE SUREGRIP INSULATED TEST LEADS (P/N TL224).

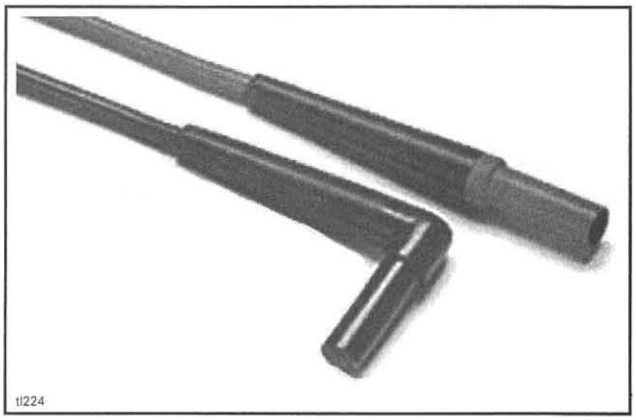
tl224

CAPS CONDITION	CAPS CONNECTOR		VOLTAGE
Free	3	2	Close to 0 Vdc

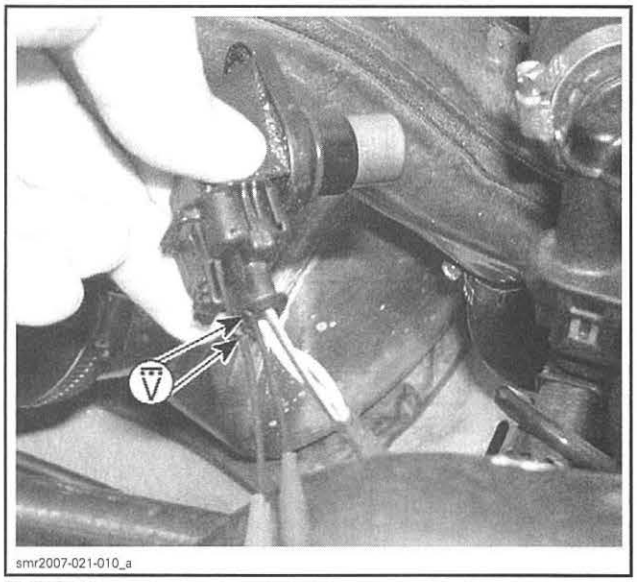

smr2007-021-010_a

TYPICAL

CAPS CONDITION	CAPS CONNECTOR		VOLTAGE
Metallic object on sensor	3	2	Battery voltage

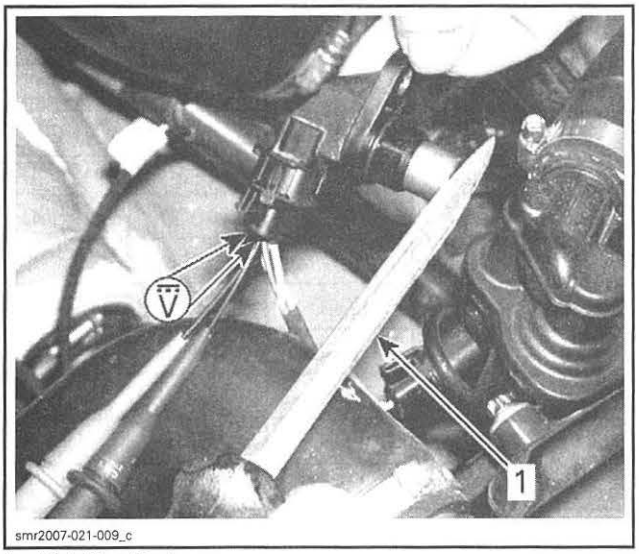

1. Metallic object

If voltage is as specified, repair or replace wiring and connectors between sensor and ECM.

If wiring is good, check ECM. Refer to *ENGINE CONTROL MODULE (ECM)*.

If battery voltage is not measured as specified, try a new CAPS.

CAPS Replacement

1. Open/remove seat.

Models with Suspension

2. Remove rear ventilation box. Refer to *BODY*.
3. Remove deck extension. Refer to *BODY*.

All Models

4. Remove air intake silencer. Refer to *AIR INTAKE SYSTEM*.
5. Detach CPS connector from its holder.

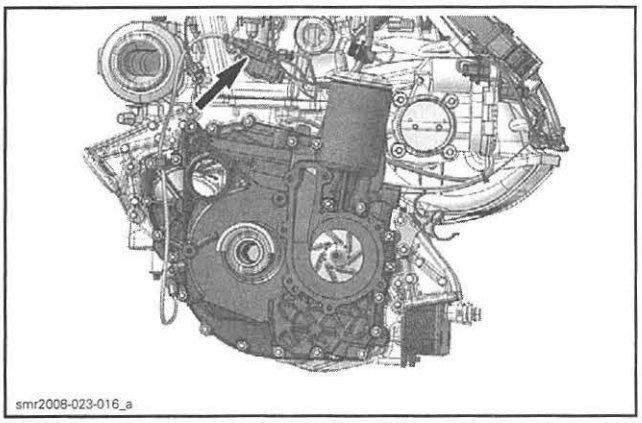

TYPICAL

6. Disconnect CAPS connector.

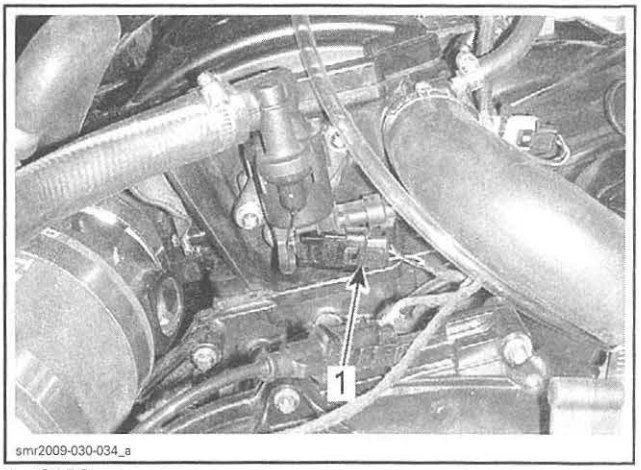

1. CAPS connector

7. Unscrew the CAPS retaining screw.
8. Pull CAPS from engine.
9. Install the new CAPS.

NOTICE **Be sure to install new O-ring on the new CAPS.**

10. Apply Loctite 243 (blue) on the CAPS retaining screw threads.
11. Torque the CAPS retaining screw to 9 N•m (80 lbf•**in**).

MANIFOLD AIR TEMPERATURE SENSOR (MATS)

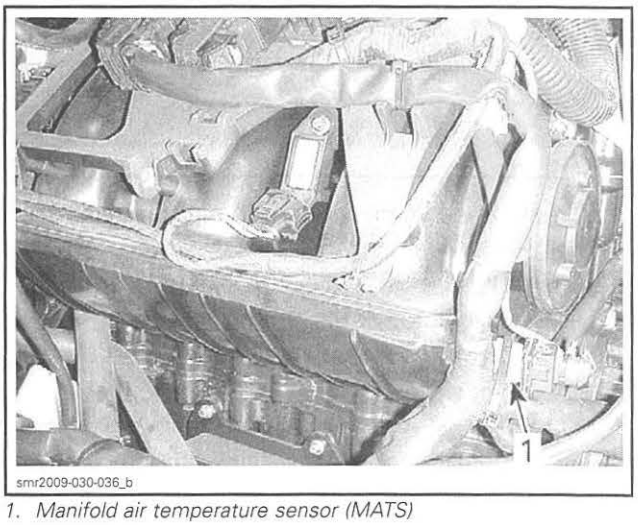

1. Manifold air temperature sensor (MATS)

MATS Resistance Test

1. Remove the parts required to access the MATS, refer to *MATS REPLACEMENT*.
2. Disconnect the MATS connector.

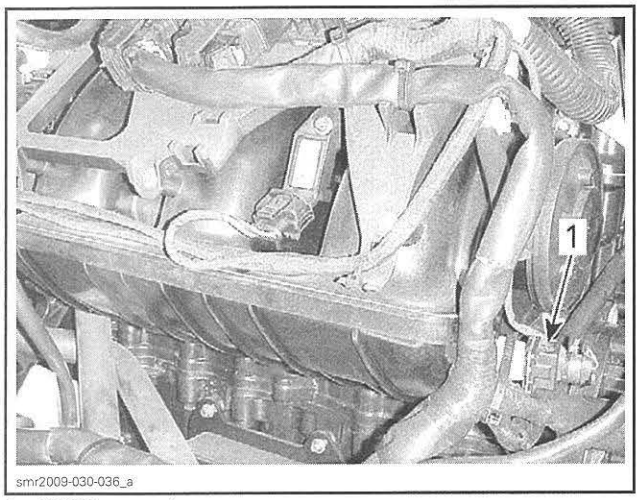

1. *MATS connector*

3. Using the FLUKE 115 MULTIMETER (P/N 529 035 868) set to Ω, probe the MAPS sensor terminals.

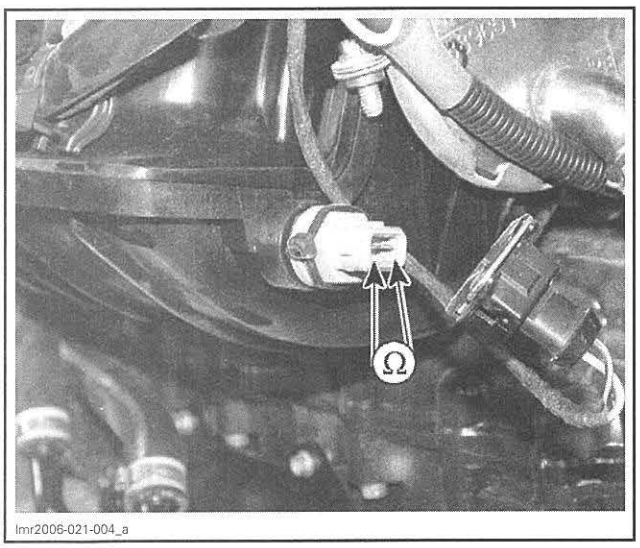

The resistance value measured should be as specified in the *MATS RESISTANCE CHART* that follows. Otherwise, replace the MATS.

If resistance value is as specified, carry on with the following steps.

4. Reconnect the MATS and disconnect the ECM connector "A" on the ECM.
5. Install the ECM ADAPTER TOOL (P/N 529 036 166) on ECM connector "A".
6. Probe adapter terminals as follows.

ECM ADAPTER		MEASUREMENT
PIN		RESISTANCE Ω
A-J3	A-H3	See *MATS RESISTANCE CHART*

MATS RESISTANCE CHART				
TEMPERATURE		RESISTANCE (OHMS)		
°C	°F	NOMINAL	LOW	HIGH
- 30	- 22	12600	11800	13400
- 20	- 4	11400	11000	11800
- 10	14	9500	8000	11,000
0	32	5900	4900	6900
10	50	3800	3100	4500
20	68	2500	2200	2800
30	86	1700	1500	1900
40	104	1200	1080	1320
50	122	840	750	930
60	140	630	510	750
70	158	440	370	510
80	176	325	280	370
90	194	245	210	280
100	212	195	160	210
110	230	145	125	160
120	248	115	100	125

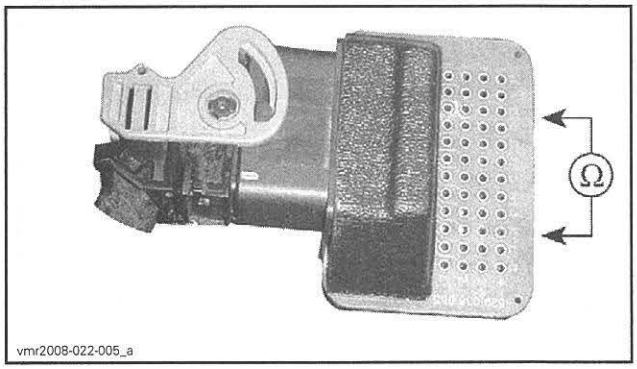

If resistance value is as specified, check ECM. Refer to *ENGINE CONTROL MODULE (ECM)* in this section.

If resistance value is not as specified, repair or replace wiring and connectors between the ECM and the MATS.

MATS Replacement

1. Open/remove seat.

Models with Suspension

2. Remove rear ventilation box. Refer to *BODY.*

All Models

3. Disconnect the MATS connector.

4. Unscrew the MATS from the engine.
5. Install a new MATS and torque to 17 N•m (150 lbf•**in**).

NOTE: Be sure to install a new thrust washer on the MATS before installing it on the intake manifold.

COOLANT TEMPERATURE SENSOR (CTS)

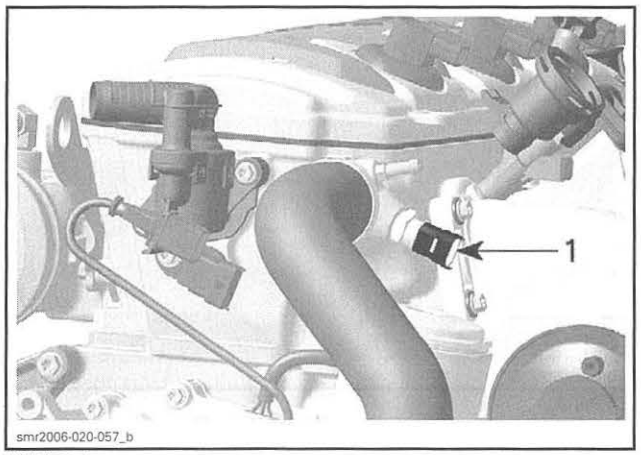

TYPICAL
1. Coolant temperature sensor (CTS)

NOTE: An overheat indication will come on in the information center when the coolant temperature reaches:

ENGINE	OVERHEAT TEMPERATURE
All 1503	110°C (230°F)

Check for debris or blockage in cooling system.

CTS Resistance Test

1. Remove the parts required to access the CTS, refer to *CTS REPLACEMENT.*
2. Disconnect the connector from the CTS and test the resistance of the sensor. Refer to the *CTS RESISTANCE CHART* further in this topic.

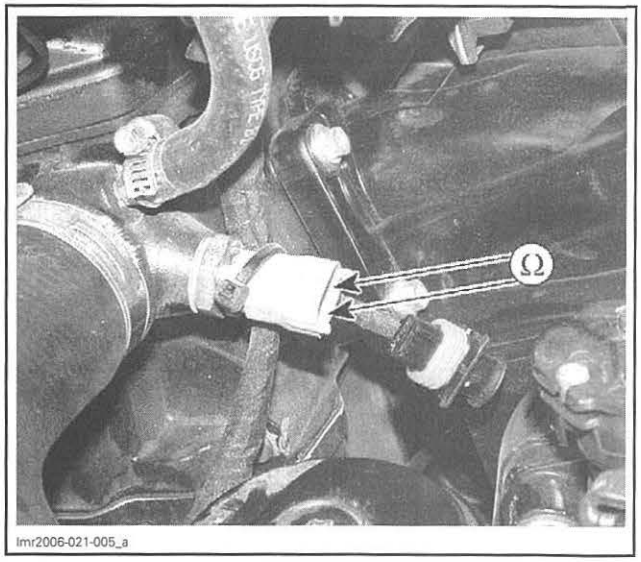

If resistance measured is not as specified, replace the CTS.

If the resistance measured is as specified, proceed with the following steps.

3. Reconnect the CTS connector and disconnect ECM connector "A" from the ECM.
4. Using a multimeter and the ECM ADAPTER TOOL (P/N 529 036 166), check the CTS circuit resistance as per table.

CTS RESISTANCE TEST		
ECM ADAPTER PIN		RESISTANCE Ω
A-A1	A-J2	See *CTS RESISTANCE CHART*

CTS RESISTANCE CHART				
TEMPERATURE		RESISTANCE (OHMS)		
°C	°F	NOMINAL	LOW	HIGH
- 30	- 22	12600	11800	13400
- 20	- 4	11400	11000	11800
- 10	14	9500	8000	11,000
0	32	5900	4900	6900
10	50	3800	3100	4500
20	68	2500	2200	2800
30	86	1700	1500	1900
40	104	1200	1080	1320
50	122	840	750	930
60	140	630	510	750
70	158	440	370	510
80	176	325	280	370
90	194	245	210	280
100	212	195	160	210
110	230	145	125	160
120	248	115	100	125

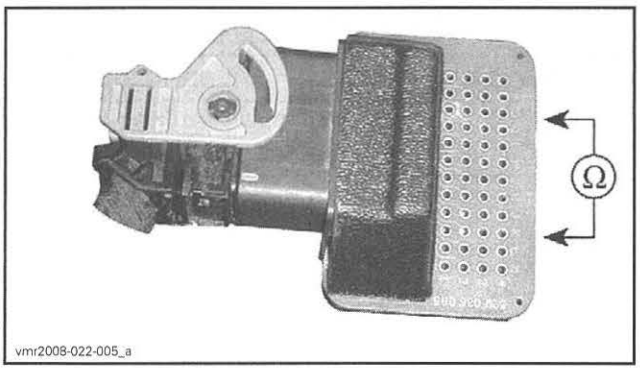

If the resistance value measured is as specified, check ECM. Refer to *ECM* further in this section.

If the resistance value is not within specification, repair or replace wiring and connectors between ECM connector and the CTS.

CTS Replacement

1. Open/remove seat.

Models with Suspension

2. Remove rear ventilation box. Refer to *BODY*.
3. Remove deck extension. Refer to *BODY*.

All Models

4. Disconnect CTS connector and remove CTS.
5. Install the new CTS and torque to 18 N•m (159 lbf•**in**).
6. Reinstall remaining removed parts.

MANIFOLD ABSOLUTE PRESSURE SENSOR (MAPS)

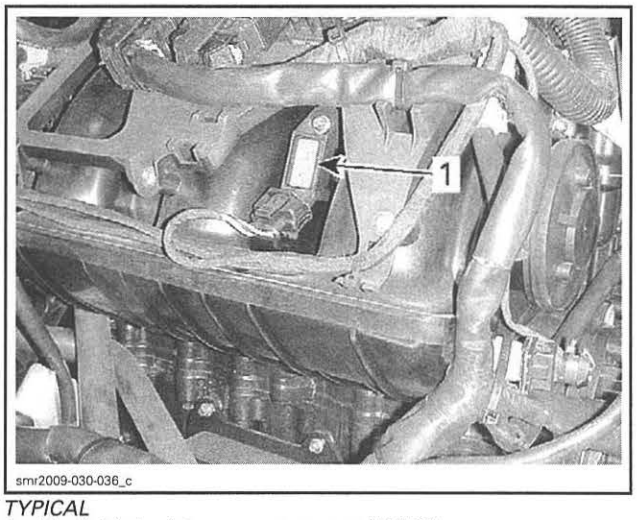

TYPICAL
1. Manifold absolute pressure sensor (MAPS)

NOTE: This sensor is a dual function device. When the engine is started and runs at idle speed, the sensor measures atmospheric pressure and stores it in the ECM. Thereafter, it measures manifold absolute pressure at operating RPMs.

Ensure sensor is correctly installed on intake manifold. Otherwise, the MAPS could generate a fault code for an unexpected sensor range at idle when it reads atmospheric pressure. Remove sensor and check for oil or dirt on its end and if problem persists, check throttle plate condition/position and the wiring harness. Perform the following tests.

MAPS Voltage Test

1. Remove the parts required to access the MAPS, refer to *CTS REPLACEMENT* in this subsection.
2. Disconnect connector from MAPS.

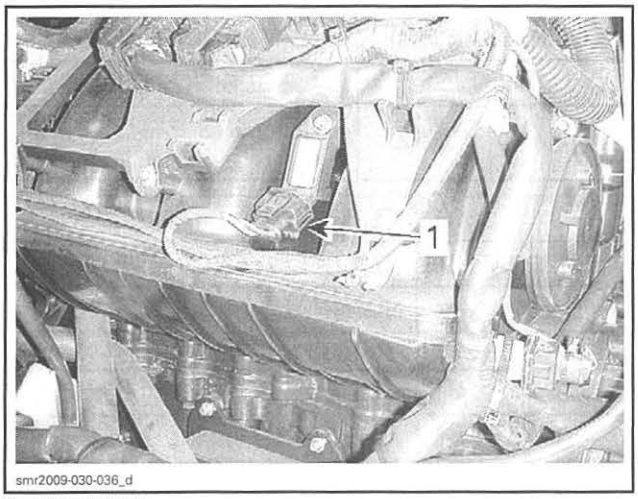

1. Disconnect

3. Press the START button to wake up the ECM.
4. Install the tether cord on the engine cut-off switch.
5. Use the FLUKE 115 MULTIMETER (P/N 529 035 868) and select Vdc.
6. Read voltage as per following table.

MAPS CONNECTOR	VOLTAGE
Terminal 1 to battery ground	Approx. 5 V
Terminal 2 to battery ground	Approx. 0 V
Terminal 3 to battery ground	Approx. 0 V

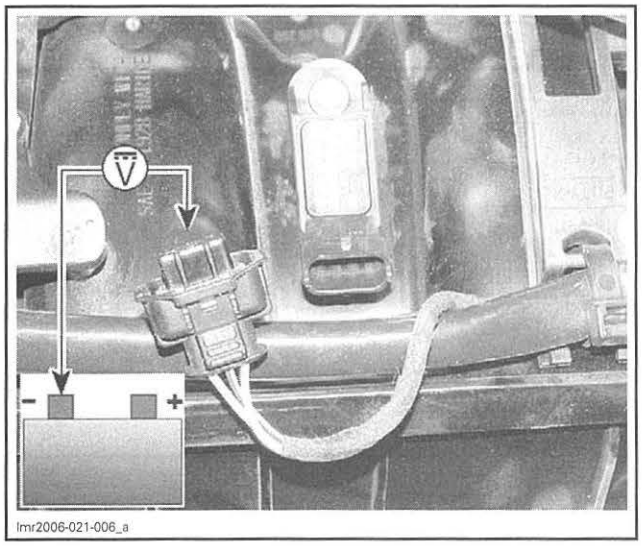

If voltage measured is as specified, replace the MAPS.

If voltage measured is not as specified, refer to *CONTINUITY TEST OF MAPS WIRING HARNESS.*

Continuity Test of MAPS Wiring Harness

1. Disconnect ECM connector "A" from the ECM.
2. Using a multimeter and the ECM ADAPTER TOOL (P/N 529 036 166), test for circuit continuity as per following table.

MAPS CONNECTOR	ECM CONNECTOR	RESISTANCE
Pin 1	A-B4	Close to 0 Ω continuity
Pin 2	A-H2	
Pin 3	A-G4	

3. If wiring harness is good, check ECM. Refer to *ENGINE CONTROL MODULE (ECM)* in this subsection.
4. If a high resistance or an open circuit is measured, repair or replace wiring and connectors between the ECM and the MAPS.

MAPS Replacement

1. Open/remove seat.

Models with Suspension

2. Remove rear ventilation box. Refer to *BODY.*
3. Remove deck extension. Refer to *BODY.*

All Models

4. Disconnect MAPS connector and remove the MAPS.
5. Install the new MAPS paying attention to index its tab into the adaptor notch.
6. Apply Loctite 243 (blue) on retaining screw and torque to 10 N•m (89 lbf•**in**).
7. Reinstall remaining parts removed, refer to applicable subsections.

EXHAUST GAS TEMPERATURE SENSOR (EGTS)

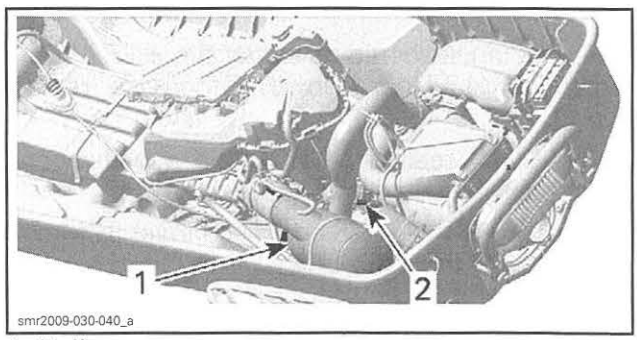

1. Muffler
2. Exhaust gas temperature sensor (EGTS)

NOTE: An overheat signal will come on in the information center when the exhaust temperature reaches.

ENGINE	OVERHEAT TEMPERATURE
All 1503	110°C (230°F)

EGTS Resistance Test

1. Remove the parts required to access the EGTS, refer to *EGTS REPLACEMENT* in this subsection.
2. Disconnect the connector from the EGTS.
3. Set the FLUKE 115 MULTIMETER (P/N 529 035 868) to Ω selection and measure the resistance of the sensor.


529035868

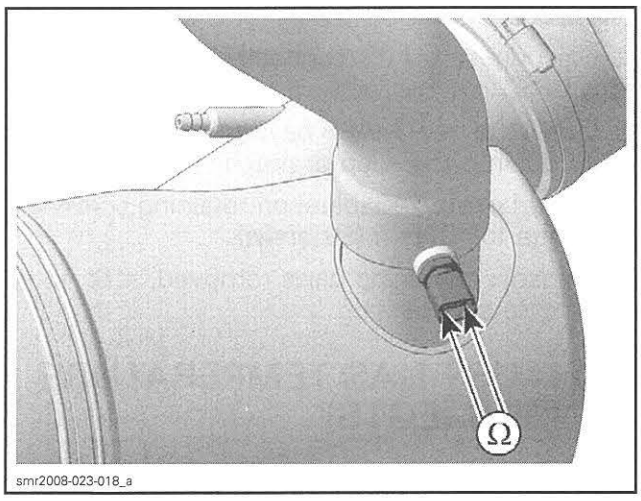

smr2008-023-018_a

The resistance should be as per the *EGTS RESISTANCE CHART* that follows. Otherwise, replace the EGTS.

If the EGTS resistance is within specifications, proceed with the following steps.

4. Reconnect the EGTS and disconnect ECM connector "A" from the ECM.
5. Using a multimeter and the ECM ADAPTER TOOL (P/N 529 036 166), check the circuit resistance as per following table.

ECM ADAPTER		MEASUREMENT
PIN		RESISTANCE Ω
A-J4	A-H4	See *EGTS RESISTANCE CHART*

EGTS RESISTANCE CHART				
TEMPERATURE		RESISTANCE (OHMS)		
°C	°F	NOMINAL	LOW	HIGH
- 30	- 22	12600	11800	13400
- 20	- 4	11400	11000	11800
- 10	14	9500	8000	11,000
0	32	5900	4900	6900
10	50	3800	3100	4500
20	68	2500	2200	2800
30	86	1700	1500	1900
40	104	1200	1080	1320
50	122	840	750	930
60	140	630	510	750
70	158	440	370	510
80	176	325	280	370
90	194	245	210	280
100	212	195	160	210
110	230	145	125	160
120	248	115	100	125

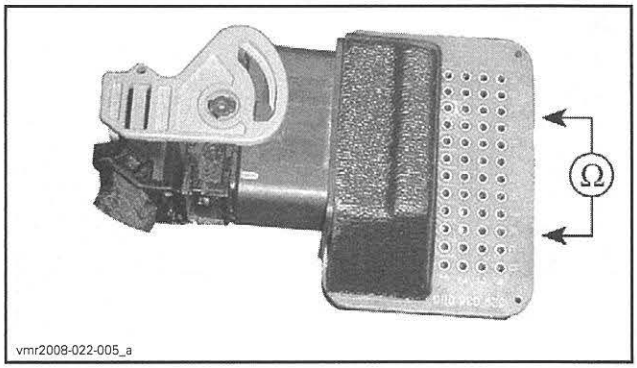

vmr2008-022-005_a

If resistance value is as specified, check ECM. Refer to *ENGINE CONTROL MODULE (ECM)* in this subsection.

If resistance value is not within specifications, repair or replace wiring and connectors between the ECM and the EGTS.

EGTS Replacement

Models with Suspension

1. Open the boarding platform and remove the LH storage basket.

GTX/RXT/Wake Pro Models

2. Remove the LH access panel on the boarding platform.
3. Disconnect the exhaust hose from the muffler.

All Models

4. Disconnect the EGTS connector.
5. Unscrew EGTS from muffler.
6. Apply LOCTITE 518 (P/N 293 800 038) on the middle threads of the new EGTS.

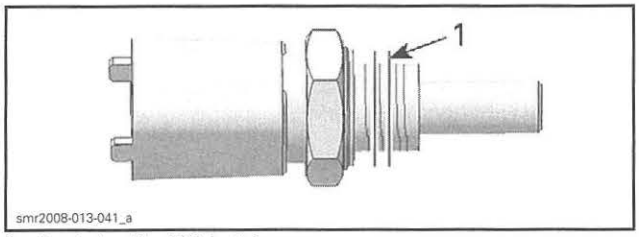

1. Apply Loctite 518 in this area

7. Install the EGTS.
8. Torque the sensor to 16 N•m (142 lbf•**in**).
9. Install the EGTS connector.
10. Install all other removed parts, refer to applicable subsections.

KNOCK SENSOR (KS)

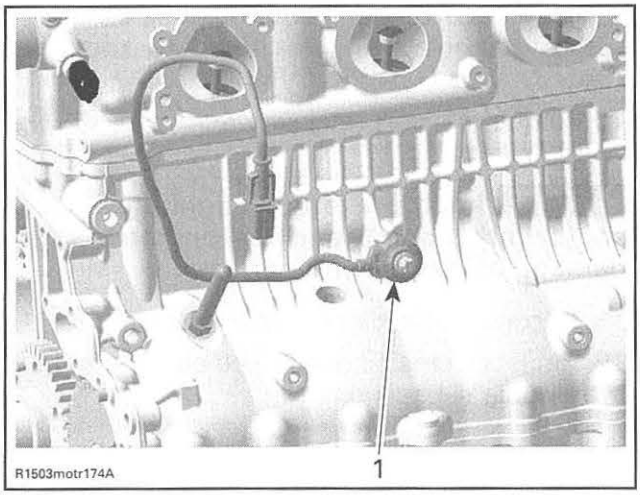

1. Knock sensor (KS)

KS Dynamic Test

1. Connect watercraft to B.U.D.S. software, refer to *COMMUNICATION TOOLS AND B.U.D.S.* subsection.
2. In B.U.D.S., click the **Faults** tab and look for a **Knock sensor fault**.
3. Start the engine and bring engine RPM above 5000 RPM.
4. Using the B.U.D.S. software, monitor the knock sensor for a fault code.

If no fault occurs, the knock sensor is good.

If a fault occurs, carry out the following steps.

5. Ensure sensor and cylinder head contact surfaces are clean.
6. Ensure the correct mounting bolt and washer are used and are properly torqued.

NOTE: It is necessary to remove the intake manifold to inspect the contact surfaces. Refer to *INTAKE MANIFOLD* subsection.

7. Check the knock sensor resistance, refer to *KS RESISTANCE TEST*.

KS Resistance Test

1. Remove the parts required to access the knock sensor, refer to *KS REPLACEMENT*.
2. Disconnect the knock sensor connector.

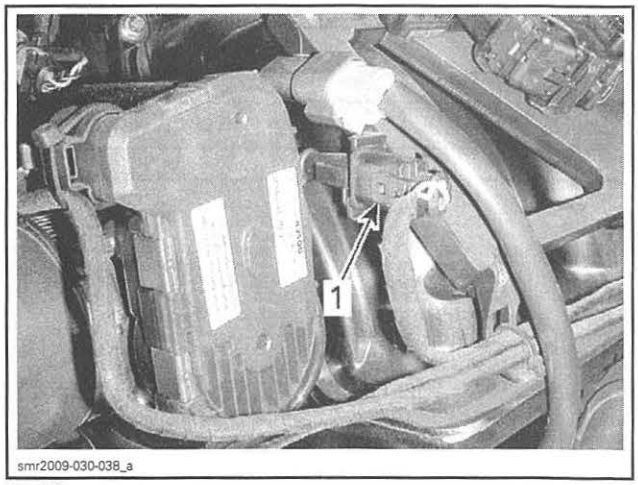

1. KS connector

3. Using a multimeter, measure the resistance between the knock sensor terminals.

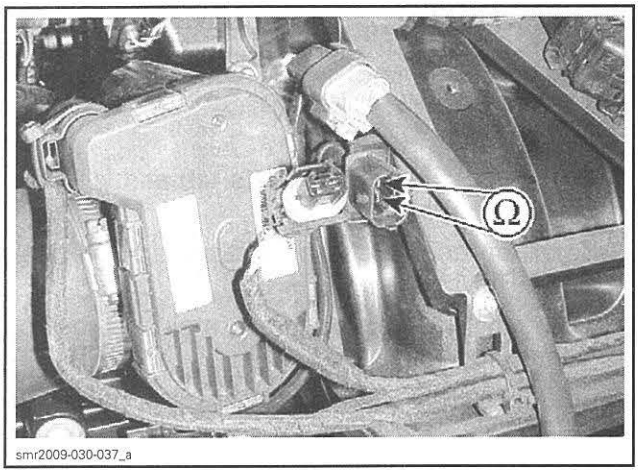

smr2009-030-037_a

KNOCK SENSOR RESISTANCE @ 20°C (68°F)
Approximately 5 MΩ

If resistance is not as specified, replace knock sensor.

If resistance is as specified, carry on with the following steps.

4. Reconnect the knock sensor connector.
5. Disconnect connector "A" from the ECM.
6. Using a multimeter and the ECM ADAPTER TOOL (P/N 529 036 166), check circuit resistance through the knock sensor as per following table.

ECM ADAPTER		MEASUREMENT
PIN		RESISTANCE @ 20°C (68°F)
A-C3	A-G2	Approximately 5 MΩ

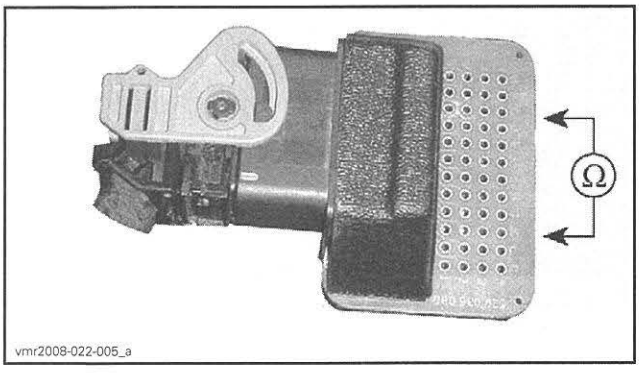

vmr2008-022-005_a

If wiring harness is good, check ECM. Refer to *ENGINE CONTROL MODULE (ECM)* in this section.

If an open circuit is measured, repair or replace wiring and connectors between ECM and knock sensor.

KS Replacement

1. Open/remove seat.

Models with Suspension

2. Remove rear ventilation box. Refer to *BODY*.
3. Remove deck extension. Refer to *BODY*.

All Models

4. Remove air intake silencer. Refer to *AIR INTAKE SYSTEM*.
5. Remove the intake manifold. Refer to *INTAKE MANIFOLD)* subsection.
6. Disconnect KS sensor connector.

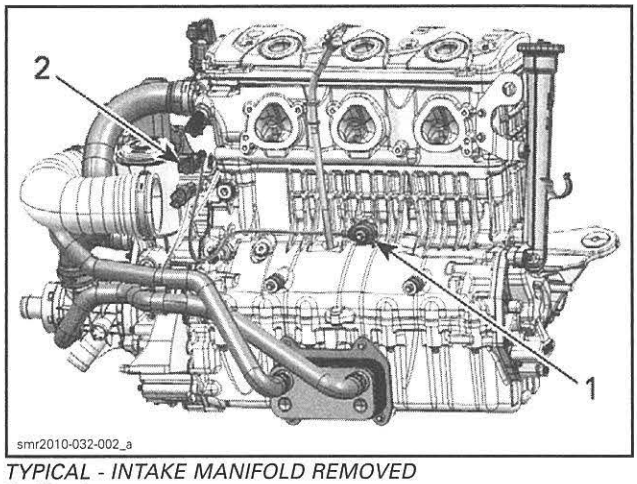

smr2010-032-002_a

TYPICAL - INTAKE MANIFOLD REMOVED
1. *Knock sensor*
2. *Knock sensor connector*

7. Unscrew and remove knock sensor from engine.
8. Clean contact surfaces.
9. Apply LOCTITE 243 (BLUE) (P/N 293 800 060) in threaded hole then install the new knock sensor.
10. Torque sensor retaining screw to 23 N•m (17 lbf•ft).

NOTICE **Improper torque might prevent sensor to work properly and lead engine to severe damage of internal components.**

11. Reconnect knock sensor connector.
12. Reinstall remaining removed parts, refer to applicable subsections.

FUEL TANK AND FUEL PUMP

SERVICE TOOLS

Description	Part Number	Page
DIAGNOSTIC HARNESS	529 036 188	317
ECM ADAPTER TOOL	529 036 166	313
FLUKE 115 MULTIMETER	529 035 868	312, 318
FUEL HOSE ADAPTER	529 036 023	310
FUEL PUMP MODULE SOCKET	529 036 125	315
LEAK TEST KIT	529 033 100	307
OETIKER PLIERS	295 000 070	312
PRESSURE GAUGE	529 035 709	310
VACUUM/PRESSURE PUMP	529 021 800	308–309

FUEL TANK AND FUEL PUMP

GTS/GTI Series, GTR and WAKE

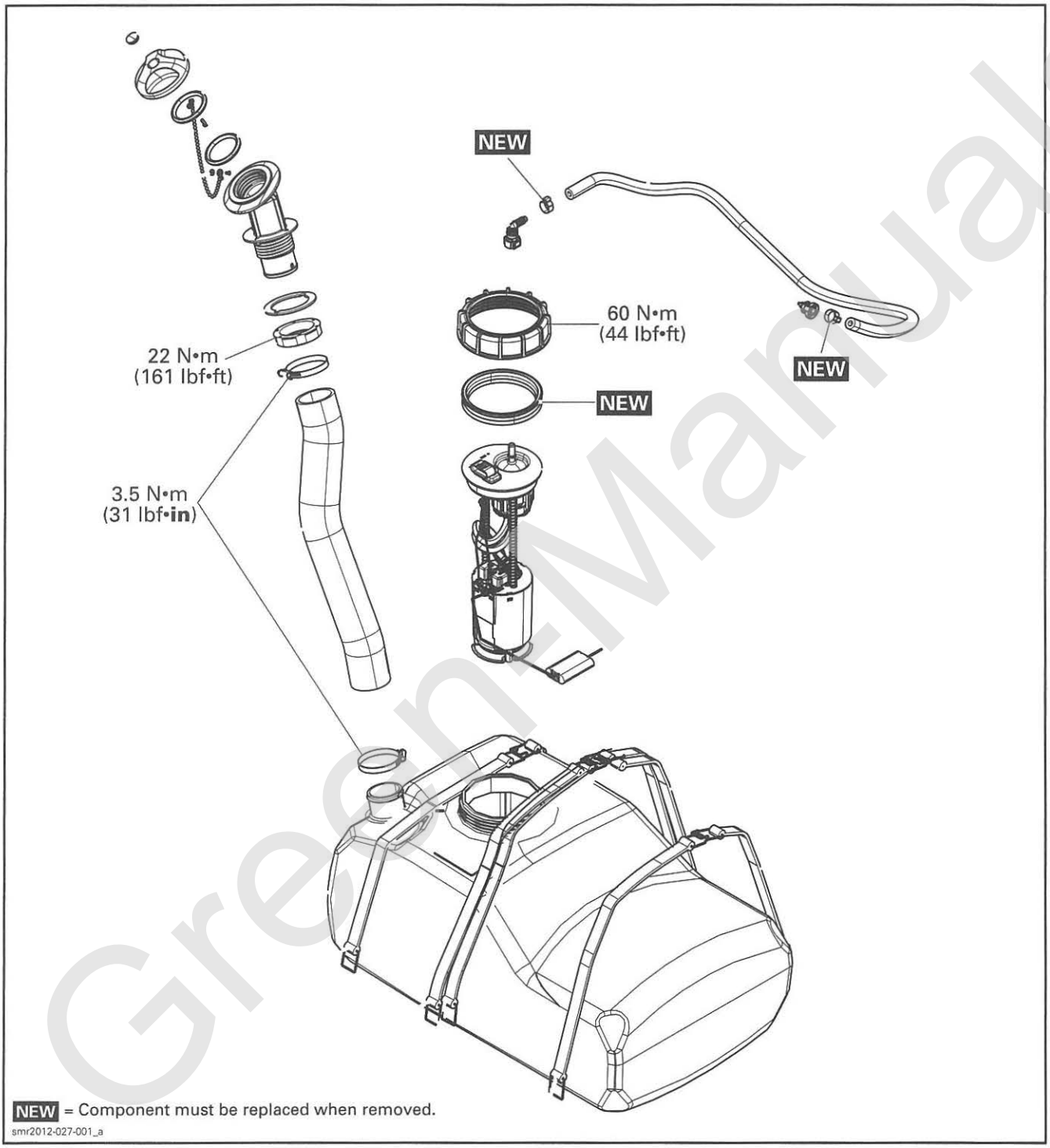

NEW = Component must be replaced when removed.

smr2012-027-001_a

Green Manuals

RXT/GTX and WAKE PRO

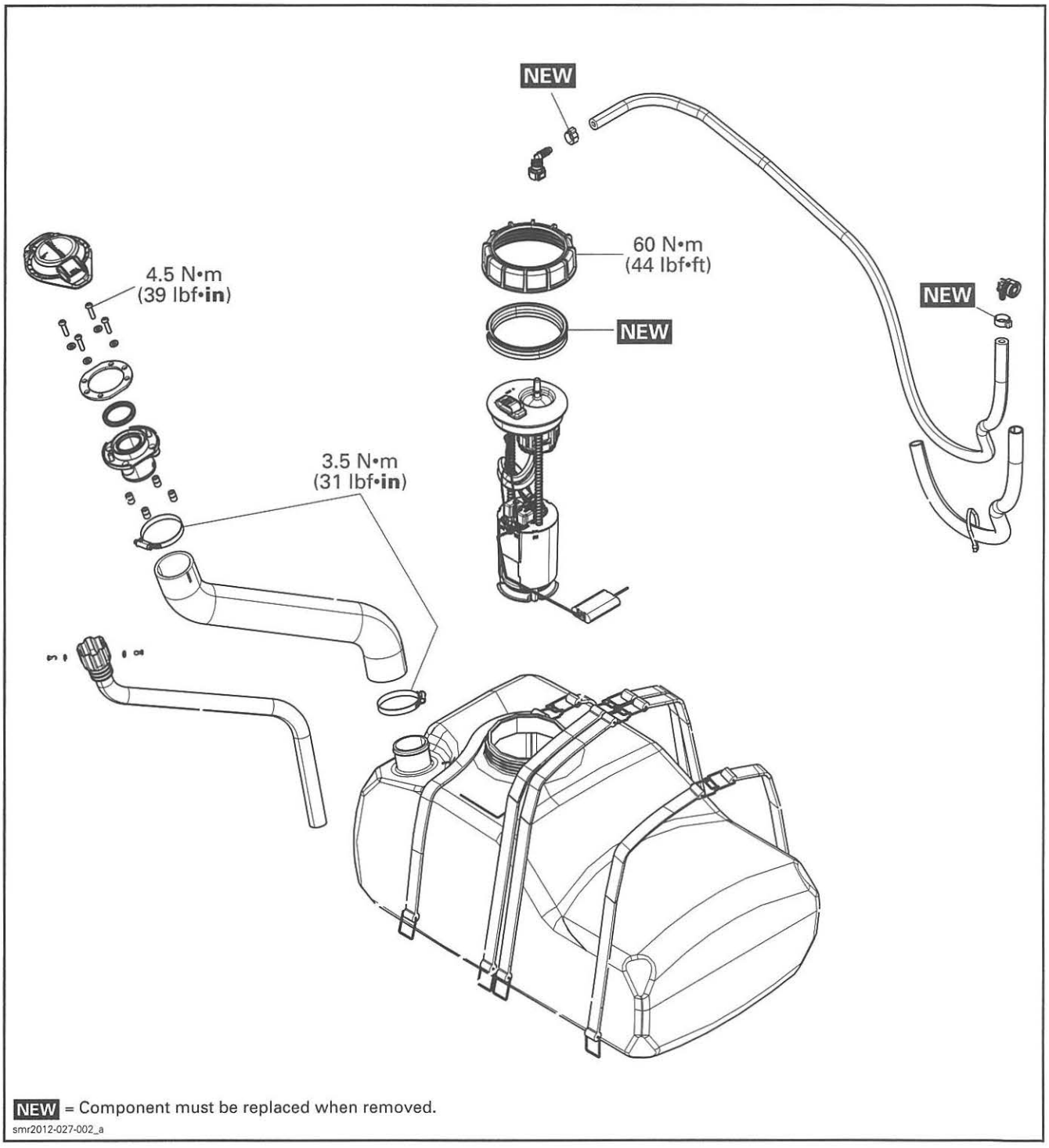

NEW = Component must be replaced when removed.

smr2012-027-002_a

RXT/GTX

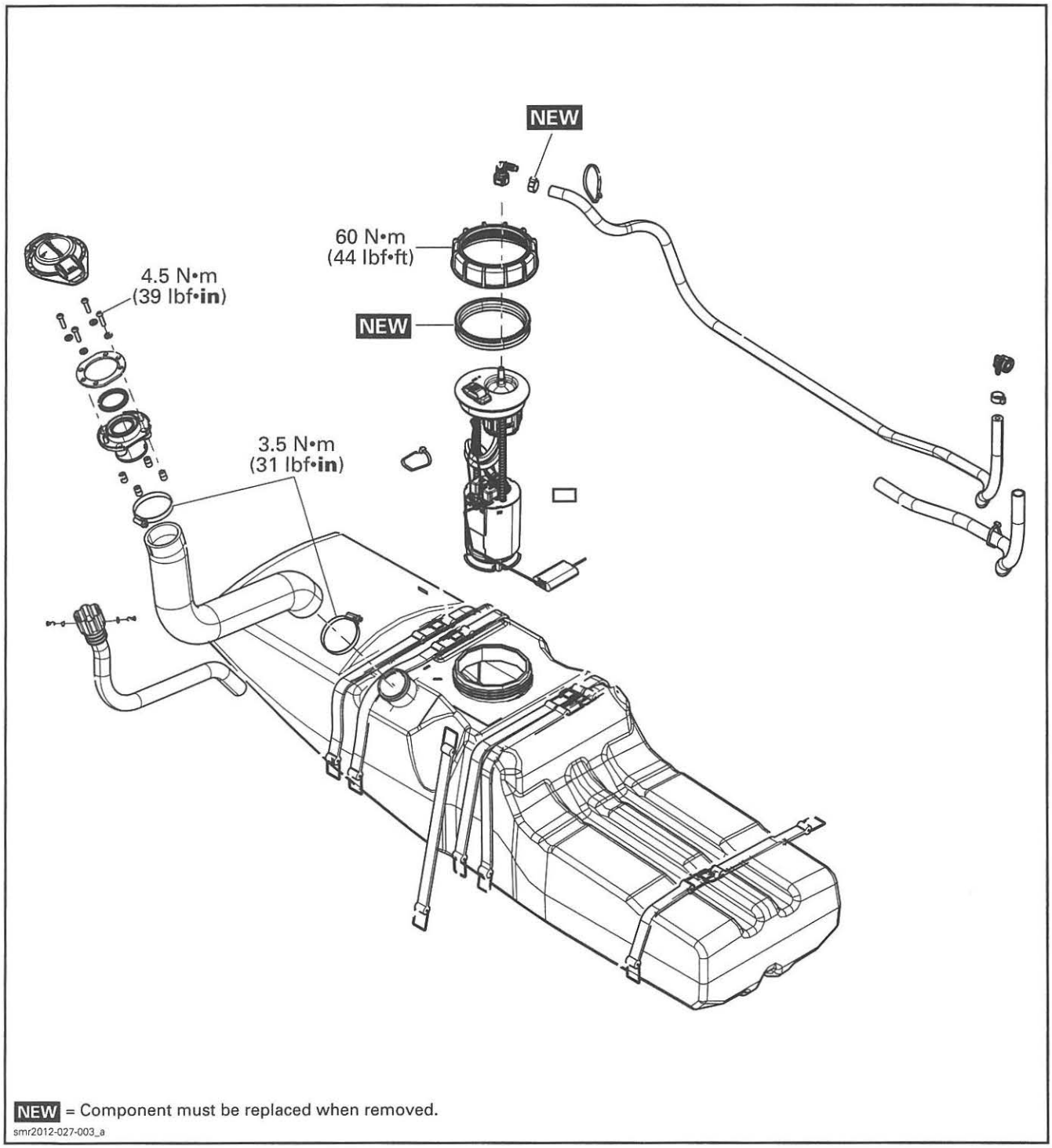

NEW = Component must be replaced when removed.

smr2012-027-003_a

FUEL SYSTEM DIAGNOSTIC FLOW CHART

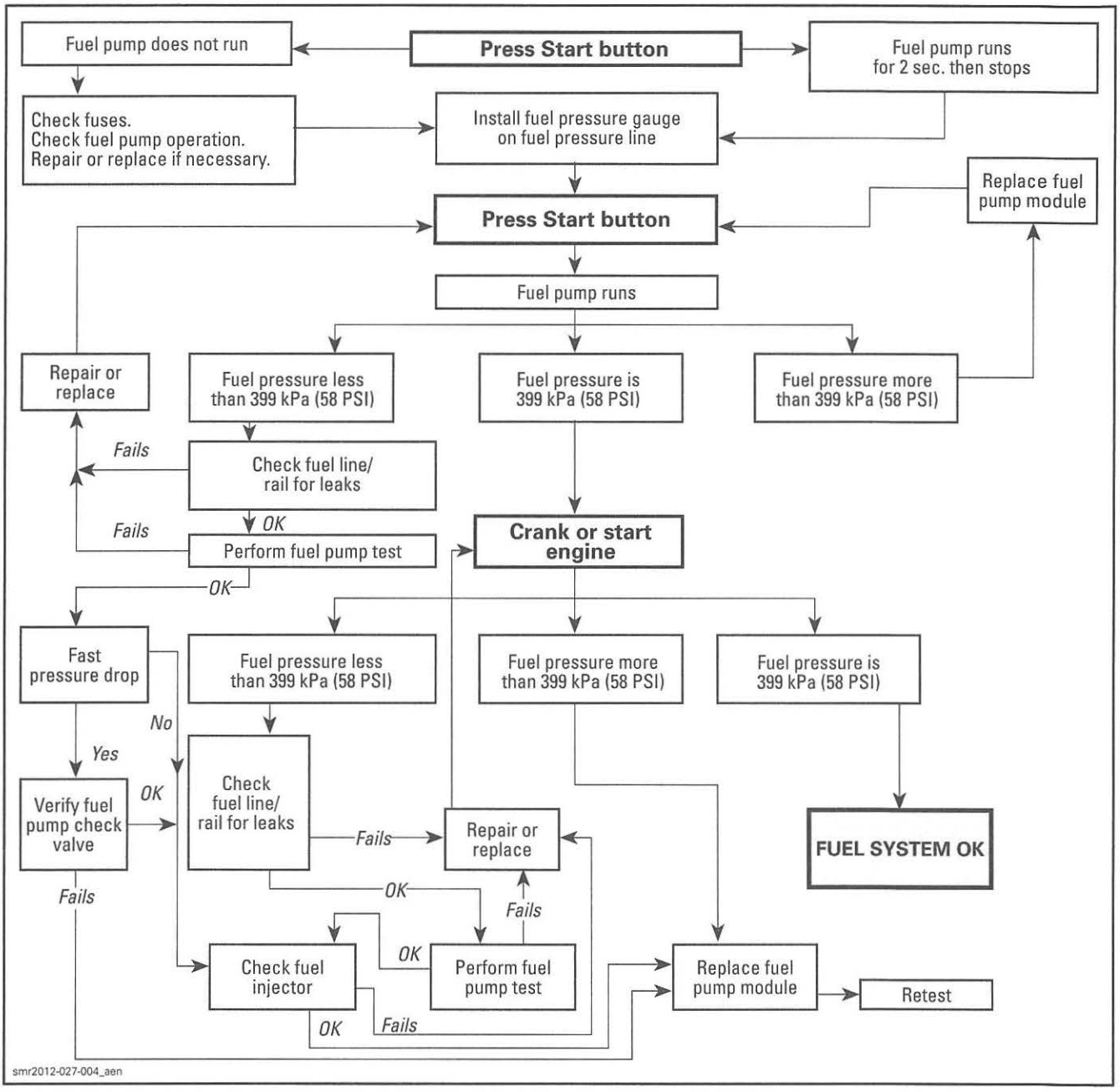

GENERAL

⚠ WARNING

Fuel lines remain under pressure at all times. Always proceed with care and use appropriate safety equipment when working on a pressurized fuel system. Wear safety glasses.

⚠ WARNING

Always disconnect battery prior to working on the fuel system. Fuel vapors are flammable and explosive under certain conditions. Always work in a well ventilated area. Do not allow fuel to spill on hot engine parts and/or on electrical connectors. Proceed with care when removing/installing high pressure test equipment or disconnecting fuel line connections. Cover the fuel line connection with an absorbent shop rag. Wipe off any fuel spillage in the bilge.

⚠ WARNING

When the repair is completed, ensure that hoses and connections from fuel rail to the fuel pump are properly secured. Then, pressurize the fuel system. After carrying out a fuel pump pressure test, use the valve on the fuel pressure gauge to release the pressure (if so equipped).

⚠ WARNING

The fuel pump is energized for a few seconds each time the START button is depressed. It builds fuel system pressure very quickly. Prior to pressing the START button, ensure there are no disconnected or damaged fuel lines that may leak fuel. A high pressure leak test must be carried out whenever a fuel system component has been disconnected.

⚠ WARNING

Ensure wires and hoses are routed and secured away from any vibrating, rotating, moving or hot components or sharp edges. Use appropriate shields and fastening devices as per factory standards.

NOTICE Whenever repairing the fuel system, always check for water infiltration in the fuel tank. Replace any damaged, leaking or deteriorated fuel line.

SYSTEM DESCRIPTION

The fuel system is comprised of:
- A fuel tank
- A vented fuel tank cap
- A fuel pump module mounted inside the fuel tank
- A fuel vent system, and
- A variety of hoses.

The fuel pump module is basically comprised of:
- An electric fuel pump mounted inside a canister type pump reservoir
- A lower inlet filter
- An upper outlet filter
- A pressure regulator
- A float type fuel level sensor.

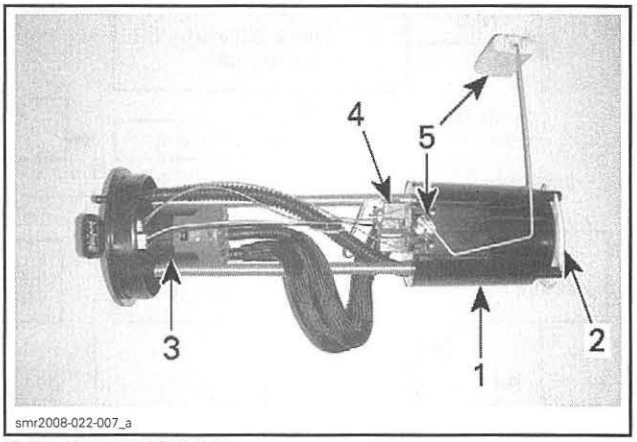

FUEL PUMP MODULE
1. *Fuel pump reservoir*
2. *Lower inlet filter*
3. *Upper outlet filter*
4. *Fuel pressure regulator*
5. *Float type fuel level sensor*

Fuel Pump Operation

When the pump is in operation, it draws fuel into the canister through a lower inlet filter and a disk type valve.

The pressurized fuel is pushed through an upper outlet filter to the fuel rail.

Excess fuel pressure generated by the pump is routed from the upper filter back to the pump canister reservoir by a pressure regulator mounted on the pump reservoir cover.

When the START button is pressed, the electrical system is powered. The fuel pump will come on for approximately 2 seconds to pressurize the fuel rail in preparation for the engine start.

The ECM supplies the ground signal to turn on the fuel pump motor.

The pressure regulator will ensure appropriate fuel pressure is supplied to the injectors.

When the ECM receives a signal to shut down the engine (START/STOP switch, engine cut-off switch, or T.O.P.S. switch) it removes the fuel pump ground signal.

Fuel Level Indication

An electric float type fuel level sensor is mounted on the side of the fuel pump reservoir. As the float moves with changing fuel levels, it varies a resistance that changes the voltage signal coming from the information center (multifunction gauge). This signal is representative of the fuel level.

The information center interprets the fuel level voltage signal that comes back from the fuel level sensor. It then displays the proper fuel level in the information center and a low fuel warning message when required.

The information center will also trigger the beeper which produces the appropriate beep signal to warn the driver of a low fuel condition.

The fuel level sensor resistance is at its lowest value when the fuel tank is full, and at its highest value when the tank is empty.

Refer to the *FUEL LEVEL SENSOR* in this subsection for fuel level sensor testing procedures.

Fuel Tank Venting

The entire vent system is incorporated within the fuel tank cap.

⚠ WARNING

If the cap requires replacement, it must be replaced with an approved vented cap of the same type supplied by BRP. Use of any other cap, or use of a non-vented cap will not allow proper venting of the fuel tank. The result may be engine fuel starvation, fuel tank overpressure, or fuel leaks which could lead to a fire or an explosion.

NOTE: BRP is the only supplier of the vented fuel tank cap. There is no equivalent vented fuel tank cap available on the market today.

INSPECTION

FUEL TANK LEAK TEST

1. Open front storage compartment cover.
2. Remove storage bin or partitions. Refer to *BODY* subsection.

Models with Suspension

3. Remove front ventilation box.

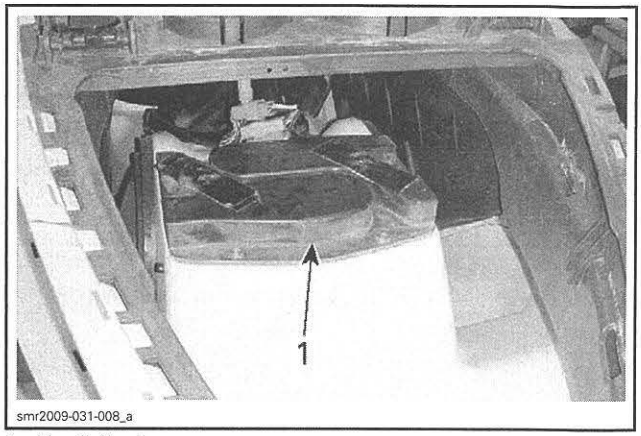

smr2009-031-008_a

1. Ventilation box

Models Without Suspension

4. Disconnect the top of the two front air ventilation hoses, refer to *BODY* subsection.

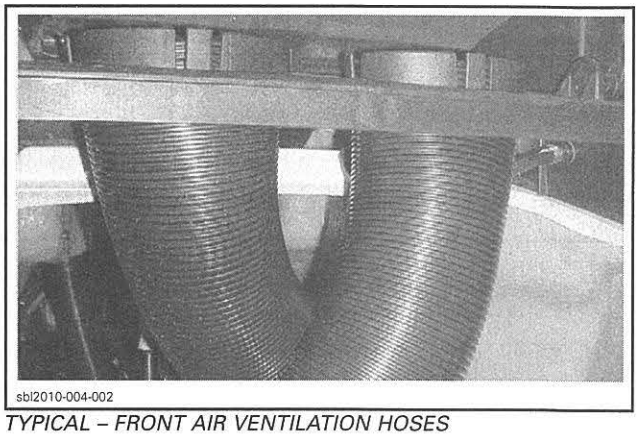

sbl2010-004-002

TYPICAL – FRONT AIR VENTILATION HOSES

All Models

5. Visually inspect condition of hoses and clamps.
6. Remove/open fuel tank cap.
7. Fill up fuel tank.
8. Install test cap on filler neck.

REQUIRED TOOL
TEST CAP (THREADED) (529 033 102) 
NOTE: Test cap is included in LEAK TEST KIT (P/N 529 033 100)
FUEL TANK TEST CAP (FLIP) (P/N 529 036 244)

9. Use the following tool to pressurize fuel tank.

REQUIRED TOOL	
VACUUM/PRESSURE PUMP (P/N 529 021 800)	

NOTE: A Y-fitting and a check valve can be installed to use compressed air for quick pressure build-up when the fuel tank is not full.

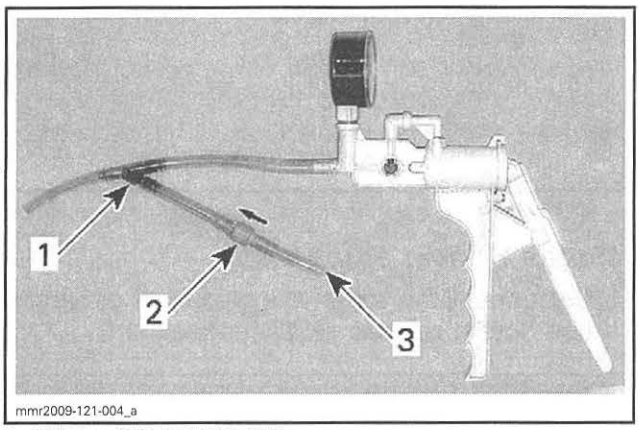

1. Y-fitting (P/N 293 710 059)
2. Check valve (P/N 275 500 505)
3. Apply compressed air here

10. Connect the vacuum/pressure pump to the nipple of fuel tank test cap.

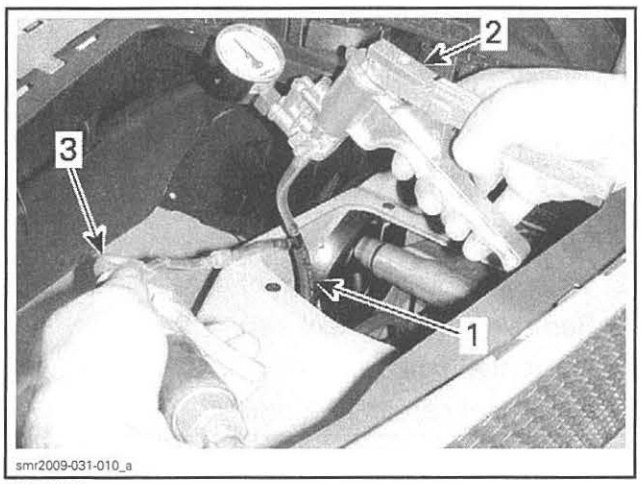

TYPICAL
1. Inlet valve end
2. Vacuum/pressure pump
3. Compressed air supply

11. Set vacuum/pressure pump to PRESSURE.

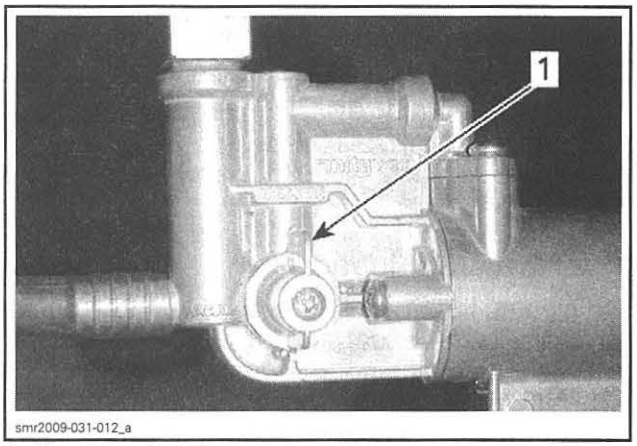

1. Pressure selected

12. Pressurize fuel tank to specification.

NOTICE Do not exceed the specification when pressurizing the fuel tank.

FUEL TANK LEAK TEST	
PRESSURE	TIME WITHOUT PRESSURE DROP
21 kPa (3 PSI)	10 minutes

If the pressure drops, locate fuel leak(s), repair/replace leaking component(s) and retest.

Possible leak areas are:
- Filler neck, hose and connections
- Fuel tank
- Fuel tank neck
- Fuel pump gasket
- Fuel pump check valve (unlikely)

To locate a leak, check for a fuel smell or leaking fuel.

If a leak is not visible, spray a soapy water solution on components to ease locating the leak(s); bubbles will indicate the leak location(s).

NOTE: If the pressure drops and no leak has been found, it is possibly fuel pump check valve.

NOTICE When the fuel system leak test is completed, thoroughly rinse all components of the soapy water solution with clear water. A soapy water residue may cause premature deterioration and must be rinsed away.

⚠ WARNING

If a leak is found, do not start the engine. Wipe off any fuel that leaked and ventilate the hull thoroughly to remove any accumulated fuel vapors. Do not use electric powered tools on watercraft unless system has passed the leak test.

13. Remove test cap.

FUEL TANK CAP LEAK TEST

To test the fuel tank cap, use the following tools.

REQUIRED TOOL
VACUUM/PRESSURE PUMP (P/N 529 021 800)
VENTED CAP TEST ADAPTER (THREADED) (P/N 529 036 243)
VENTED CAP TEST ADAPTER (FLIP) (P/N 529 036 245)

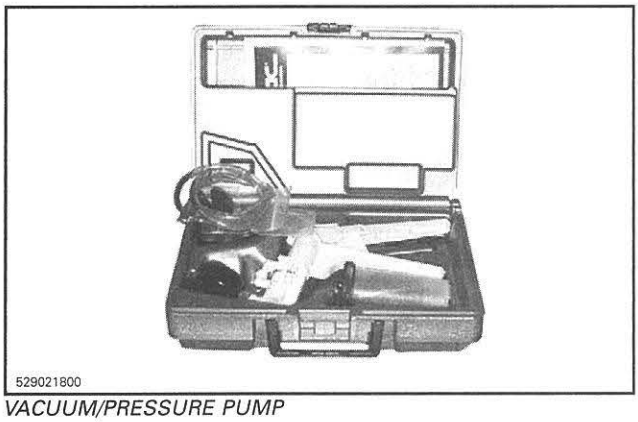

VACUUM/PRESSURE PUMP

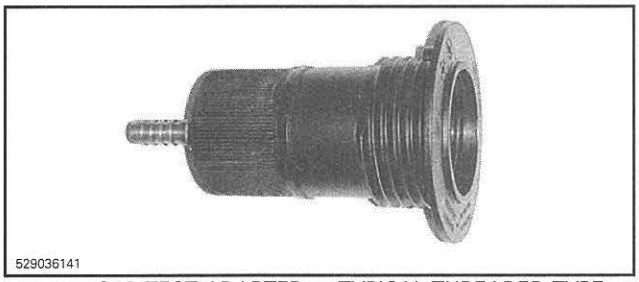

VENTED CAP TEST ADAPTER — TYPICAL THREADED TYPE SHOWN

Inlet Check Valve Function Test

Install the fuel tank cap onto the vented cap test adapter.

Set vacuum/pressure pump to the VACUUM function.

Connect vacuum/pressure pump to nipple of vented cap test adapter.

Squeeze the vacuum/pressure pump handle several times to draw air in through the check valve of fuel tank cap.

Air should be drawn in freely and vacuum indication on pump should remain at zero. If vacuum rises, replace the fuel tank cap.

Pressure Relief Valve Function Test

Set the vacuum/pressure pump to the PRESSURE function.

Squeeze the vacuum/pressure pump handle to apply pressure to the check valve of fuel tank cap and observe the pressure rise. It should be as per specification.

FUEL TANK CAP TEST	
PRESSURE	TEST RESULT
Up to 6.9 kPa (1 PSI)	Pressure must hold
Above 6.9 kPa (1 PSI) and below 13.8 kPa (2 PSI)	Pressure must release

If pressure holds above specification, replace the fuel tank cap.

Remove test adapter.

Reinstall/close fuel tank cap.

FUEL SYSTEM HIGH PRESSURE LEAK TEST

⚠ WARNING

A high pressure leak test must be carried out before starting the engine anytime a fuel system component has been disconnected for maintenance or replacement.

1. Visually inspect fuel system to ensure all fuel system connections are properly made.
2. Lightly pull on hoses at each connection to ensure they are properly locked at the quick connect fittings.
3. Remove tether cord from the engine cut-off switch to prevent engine starting.
4. Press the START button to turn on the fuel pump for a few seconds and pressurize the fuel system.
5. Check for fuel odor and visually inspect hoses, fittings and components for leaking fuel.
6. If a leak is detected, repair or replace the leaking component and repeat leak test after the repair.
7. If no leak is found, engine can be started.

FUEL PUMP PRESSURE TEST

Preparation

The pressure test will show the available pressure at the fuel pump outlet. It validates the pressure regulator, the fuel pump and check valve and it tests for leaks in the system.

1. Ensure the battery is fully charged, refer to *CHARGING SYSTEM*.
2. Open front storage compartment cover.
3. Remove the storage bin or partitions. Refer to *BODY* subsection.

Models with Suspension

4. Remove front ventilation box.

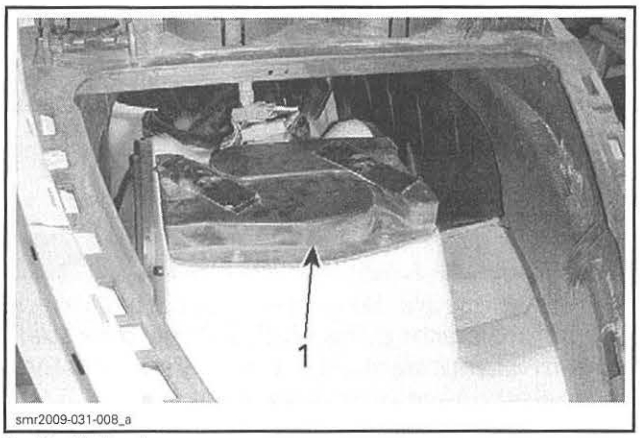

1. Ventilation box

Models Without Suspension

5. Disconnect the top of the two front air ventilation hoses, refer to *BODY* subsection.

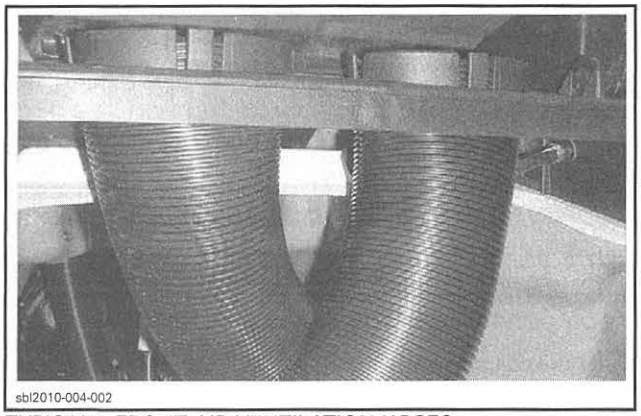

TYPICAL – FRONT AIR VENTILATION HOSES

All Models

6. Ensure hoses and fittings are not leaking. Repair any leak.
7. Ensure there is enough gas in the fuel tank.
8. Disconnect the pressure outlet hose from the fuel pump.

⚠ WARNING

Cover the fuel line connection with an absorbent shop rag. Wipe off any fuel spillage inside the bilge.

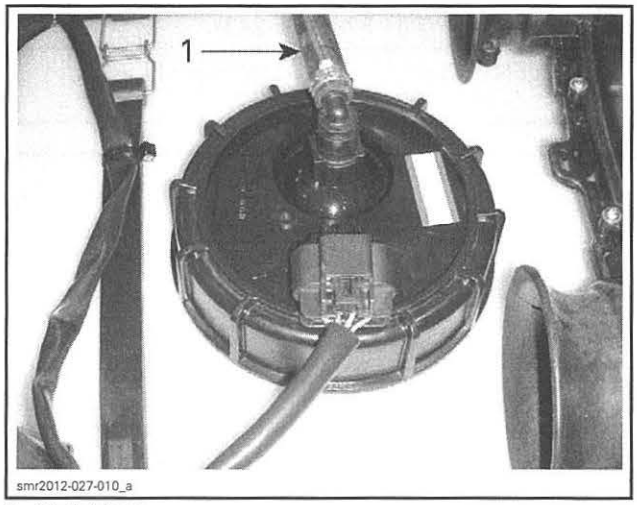

1. Outlet hose

9. Install pressure test tools between disconnected hose and fuel pump fitting (in line installation).

REQUIRED TOOLS	
PRESSURE GAUGE (P/N 529 035 709)	
FUEL HOSE ADAPTER (P/N 529 036 023)	

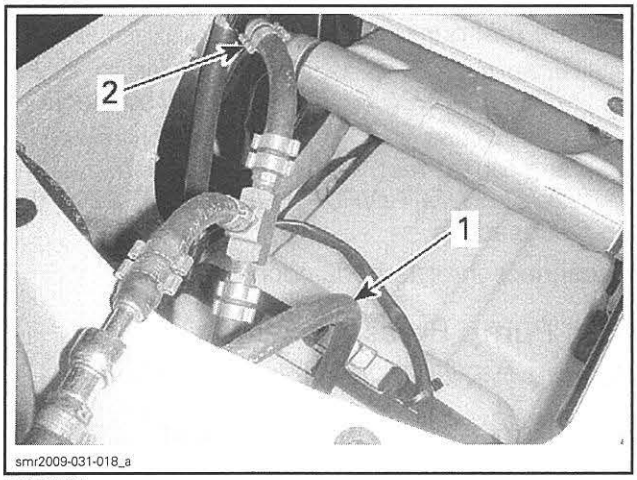

TYPICAL
1. *Connect to fuel pump*
2. *Connect to outlet hose*

Test when Engine Is Stopped

1. Remove tether cord from the engine cut-off switch to prevent engine starting.
2. Press the START button and observe fuel pressure.
3. Release pressure in system using the valve on the pressure gauge between each test so that the reading returns to zero (0).
4. Repeat test twice and compare readings to specifications in following table.

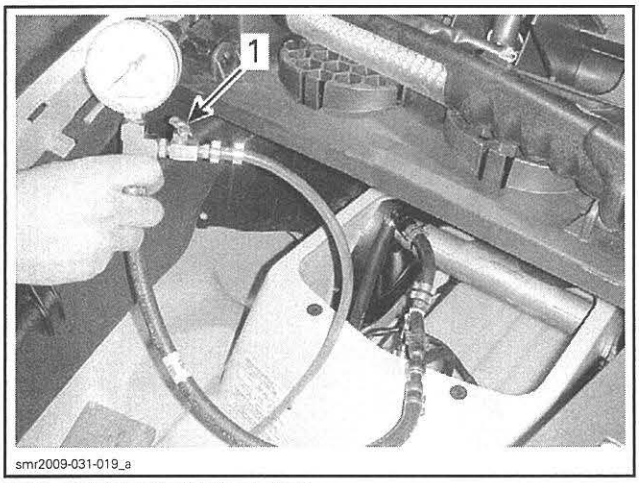

FUEL PUMP PRESSURE TEST
1. *Valve on gauge*

MODELS	FUEL PRESSURE (WHEN PRESSING THE START BUTTON)
All	386 kPa - 414 kPa (56 PSI - 60 PSI)

Test when Cranking or Starting Engine

1. **Crank or start engine** and observe fuel pressure. The fuel pressure should be the same as in previous test.

If pressure is good, fuel pump and pressure regulator are functioning correctly.

2. Stop the engine.

A rapid pressure drop indicates leakage either from the fuel rail or from the fuel pump check valve. Check fuel rail for leaks.

If a pressure drop occurs when pressing the START button and the fuel rail is not leaking, then replace the fuel pump module.

A slow pressure drop indicates leakage either from a fuel injector or from the fuel pressure regulator in the fuel pump module. To check fuel injectors for leaks, refer to the *ELECTRONIC FUEL INJECTION (EFI)* subsection. If injectors are not leaking, then replace fuel pump.

3. Release fuel pressure in system using the valve on the pressure gauge.
4. Remove pressure gauge and reinstall fuel hose on fuel pump module.

⚠ WARNING

Wipe off any fuel spillage in the bilge. Fuel is flammable and explosive under certain conditions. Always work in a well ventilated area.

5. Reinstall all other removed parts, refer to applicable subsections.

PROCEDURES

FUEL HOSES AND OETIKER CLAMPS

Fuel Hose Inspection

1. Inspect all fuel hoses for wear, kinks, cracks or any other types of damages.
2. Inspect all clamps for tightness.

Fuel Hose Replacement

When replacing fuel hoses, be sure to use hoses and clamps as available from BRP parts department. This will ensure continued proper and safe operation.

⚠ WARNING

Use of fuel lines other than those recommended by BRP may compromise fuel system integrity.

⚠ WARNING

- Never use a hose pincher on high pressure hoses.
- Never change the routing of a fuel hose.
- Always reinstall the corrugated protective tubing on fuel hoses.
- Secure fuel hoses using the appropriate locking tie or fastener to prevent contact with sharp edges or hot, rotating and moving parts.
- After connecting a hose or a quick connect fitting, pull on the hose near the fitting to make sure it is securely locked.
- Always validate fuel system tightness by performing a *FUEL PUMP PRESSURE TEST*.

Oetiker Clamp Replacement

REQUIRED TOOL	
OETIKER PLIERS (P/N 295 000 070)	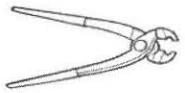

⚠ WARNING

Whenever removing a hose in the fuel system, always use new Oetiker clamps at assembly.

FUEL PUMP

Fuel Pump Operation Test

1. Remove tether cord from the engine cut-off switch to prevent engine starting.
2. Press START button.
3. The fuel pump should run for 2 seconds to build up fuel system pressure.
4. If fuel pump runs, carry out the *FUEL PUMP PRESSURE TEST* as described in *INSPECTION* in this subsection.
5. If the fuel pump does not run:
   - Ensure ECM is powered. Refer to *ELECTRONIC FUEL INJECTION (EFI)* subsection.
   - Check fuse F18. If fuse is faulty, replace it and repeat test. If fuse is good, carry out the *FUEL PUMP INPUT VOLTAGE TEST* in this subsection.

Reconnect throttle body connector.

Fuel Pump Pressure Test

Refer to *INSPECTION* in this subsection.

Fuel Pump Input Voltage Test

1. Ensure the fuel pump fuse (F18) is in good condition.
2. Disconnect fuel pump harness connector. Refer to *FUEL PUMP REMOVAL*.
3. Use the FLUKE 115 MULTIMETER (P/N 529 035 868).
4. Select Vdc.
5. Press the START button.
6. Read voltage at fuel pump harness connector as per following table.

INPUT VOLTAGE TEST		
TEST PROBES		VOLTAGE
Pin B (+ probe)	Battery ground (- probe)	Battery voltage

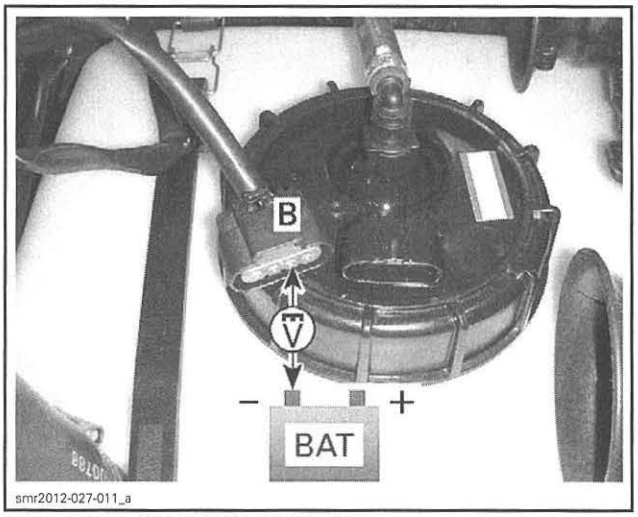

FUEL PUMP INPUT VOLTAGE TEST

If battery voltage is read, power circuit is good. Test the fuel pump circuit. Refer to *FUEL PUMP CIRCUIT TEST*.

If battery voltage is not read, power circuit is faulty. Test continuity of power circuit wiring between fuse box and fuel pump. Refer to *FUEL PUMP CIRCUIT TEST* in this subsection.

Fuel Pump Circuit Test

1. Reconnect the fuel pump harness connector.
2. Remove cover of fuse box.
3. Remove the long bus bar.

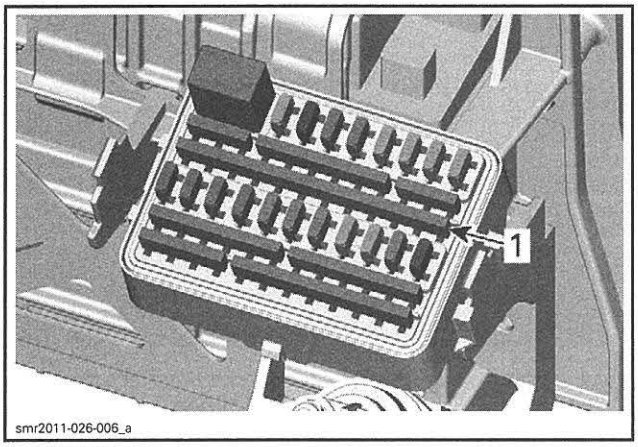

1. Long bus bar

4. Remove ECM connector "B" and install it on the ECM ADAPTER TOOL (P/N 529 036 166).

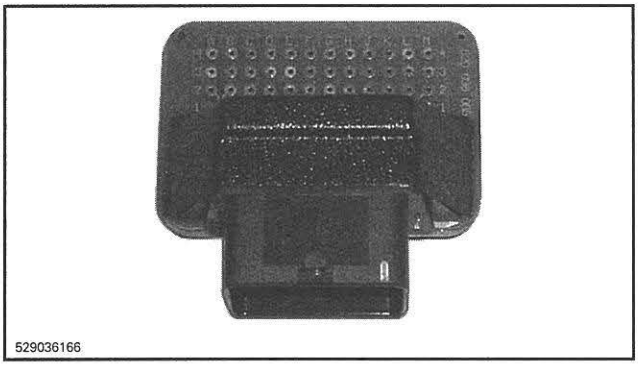

5. Set multimeter to Ω and test pump circuit as per following table.

PUMP CIRCUIT TEST THROUGH FUEL PUMP		
TEST PROBES		RESISTANCE @ 20°C (68°F)
Fuse box terminal D2	ECM connector B pin B-M1	Approx. 12 Ω

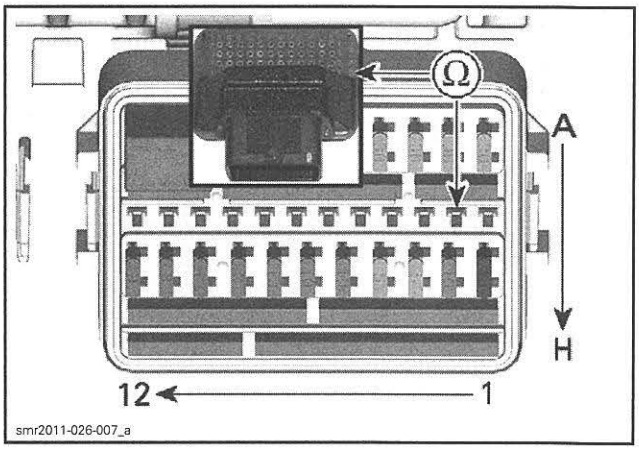

6. If test succeeded, the fuel pump, its fuse and its wiring harness are good.
7. If test failed, test wiring continuity as per table.

FUEL PUMP HARNESS CONTINUITY TEST (WIRING ONLY)		
TEST PROBES		RESISTANCE @ 20°C (68°F)
Pump harness connector pin B	Fuse box terminal F2	Close to 0 Ω (continuity)
Pump harness connector pin A	ECM connector B pin B-M1	

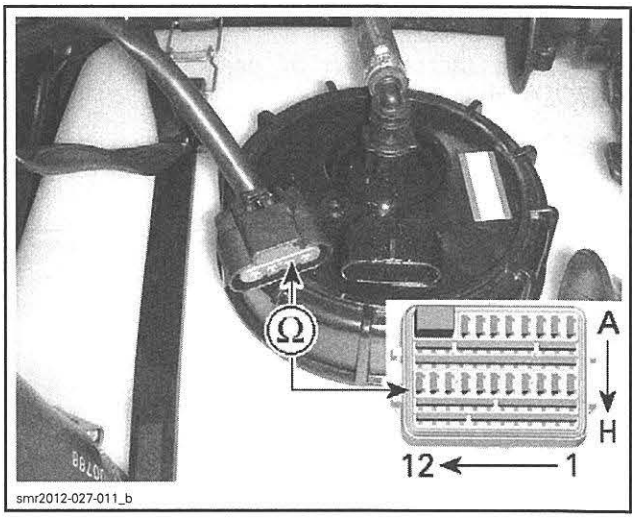

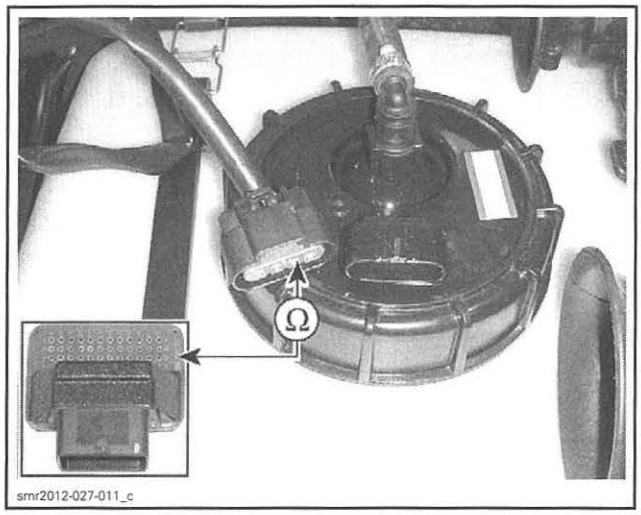

If there is an open circuit to FB-F2, repair wiring/connector between fuel pump and fuse box.

If there is good continuity to FB-F2 and fuel pump fuse (F18) is good, check continuity of the wire jumper between D2 and E2. Repair or replace wiring as required.

If every test succeeded and fuel pump still does not work, try a new ECM. Refer to *ELECTRONIC FUEL INJECTION (EFI)* subsection.

Fuel Pump Removal

1. Open front storage compartment cover.
2. Remove storage bin or partitions. Refer to *BODY* subsection.

Models with Suspension

3. Remove front ventilation box.

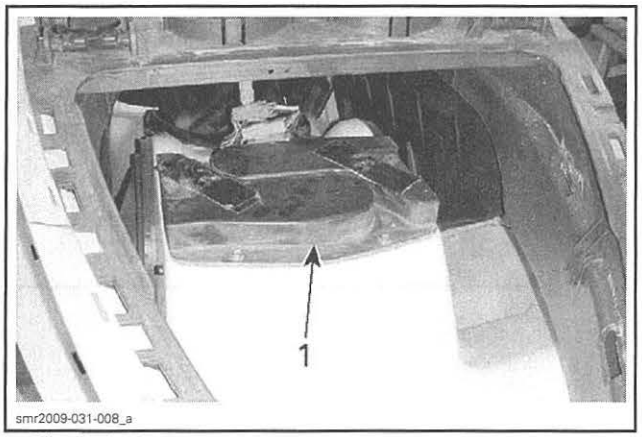

1. Ventilation box

4. Lift suspension to gain access.

NOTE: If more height is required or if the suspension cannot be used, manually lift suspension by the anchor points close to handlebar and safely lock in this position. Do not lift the watercraft from the anchor points.

Models Without Suspension

5. Disconnect the top of the two front air ventilation hoses, refer to *BODY* subsection.

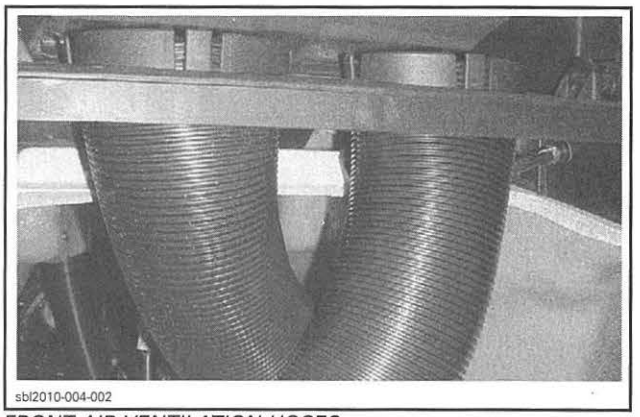

FRONT AIR VENTILATION HOSES

All Models

6. Disconnect the negative battery terminal, refer to *CHARGING SYSTEM* subsection.
7. Disconnect fuel pump electrical connector.
8. Disconnect the vent tube from the fuel pump.
9. Wrap shop rags around the high pressure fuel hose fitting, then press on the release button of the quick connect fitting and disconnect the hose.

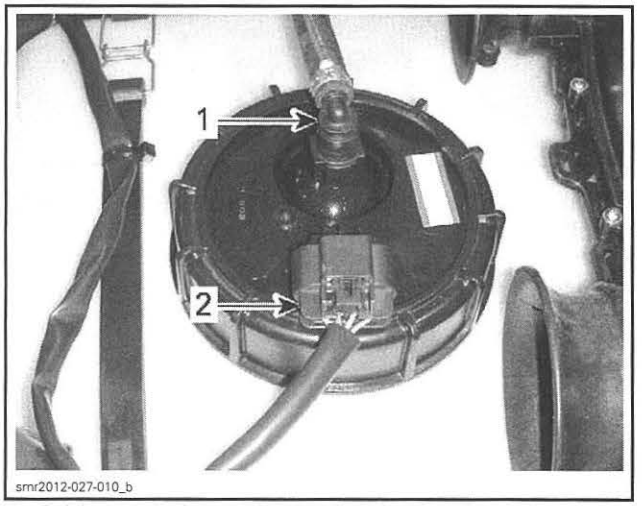

1. Quick connect fitting (high pressure fuel hose)
2. Harness connector

10. Unscrew the fuel pump retaining nut.

REQUIRED TOOL
FUEL PUMP MODULE SOCKET (P/N 529 036 125) 

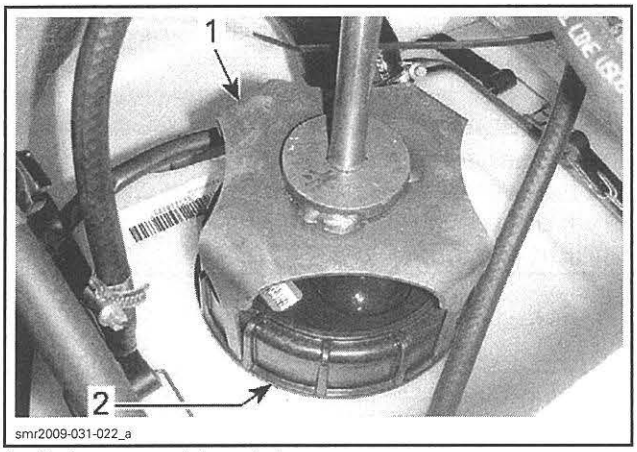

1. Fuel pump module socket
2. Fuel pump retaining nut

NOTICE While pulling out the fuel pump module, pay attention to the corrugated tubes and fuel sensor float arm. Float arm can get caught up and bend which will reduce fuel sensor accuracy. If fuel pump module is dropped or damaged, it must be replaced.

11. Slowly pull fuel pump module up through opening until corrugated tubes contact sides of opening. Tilt the fuel pump module as you slowly pull the pump upwards.

⚠ WARNING

The upper filter and fuel pump reservoir on the fuel pump module contain fuel which will drain out when fuel pump module is not in an upright position.

12. Carefully pull fuel pump module out.

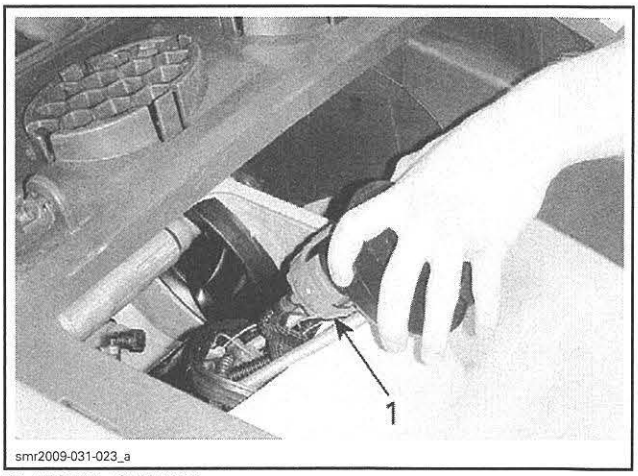

iS MODEL SHOWN
1. Pull out fuel pump module

⚠ WARNING

Always wipe off any fuel spillage from the watercraft. When working with fuel or fuel system and its components, always work in a well ventilated area.

Fuel Pump Installation

Reverse the removal procedure however, pay attention to the following.

1. Carefully insert fuel pump module in fuel tank so as not to bend float arm.
2. Install a NEW fuel pump module gasket each time the module is reinstalled.

NOTE: Wipe off parts to prevent fuel pump from turning while torquing fuel pump nut.

3. Align arrow on top of fuel pump module with index mark on top of fuel tank or fuel sensor accuracy will be affected.

NOTE: Index mark and arrow locations are highlighted for clarity in following illustration.

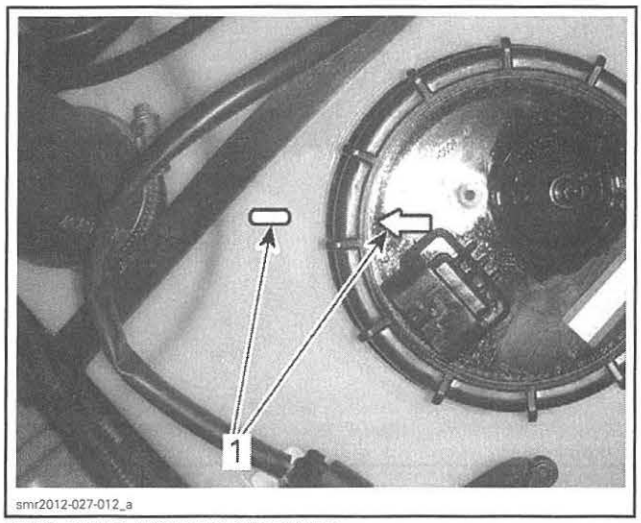

FUEL PUMP MODULE INDEXING
1. Align marks

4. Tighten fuel pump nut.

TORQUE	
Fuel pump nut	60 N•m (44 lbf•ft)

5. Carry out a *FUEL TANK LEAK TEST* and a *FUEL SYSTEM HIGH PRESSURE LEAK TEST*. See procedures in this subsection.

FUEL FILTER

Fuel Filter Inspection

Inspect fuel filter. If dirty, partially clogged or damaged, replace it.

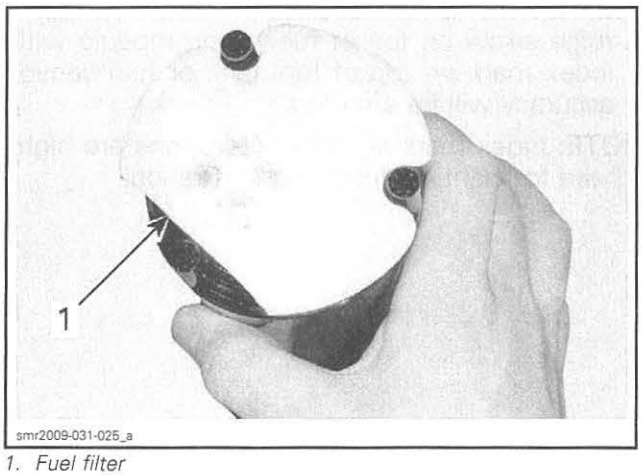

1. Fuel filter

Fuel Filter Removal

NOTE: The lower fuel filter on the fuel pump module does not require replacement under normal operating conditions. Replace only if permanently clogged or damaged.

1. Remove fuel pump. Refer to *FUEL PUMP* in this subsection.

⚠ WARNING

The upper filter and fuel pump reservoir on the fuel pump module contain fuel which will drain out when fuel pump module is not in an upright position.

2. Turn fuel pump upside down.
3. Using a small flat screwdriver, pry up the filter locking tabs.

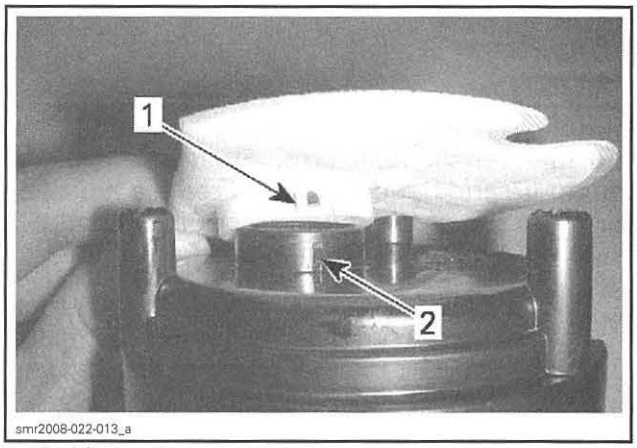

1. Fuel filter locking tab (x2)
2. Filter locking pin (x2)

4. Pull filter off fuel pump reservoir housing.

Fuel Filter Installation

1. Align new filter with pump reservoir housing.
2. Press new filter on by hand. Ensure it is fully seated and locked onto the pump reservoir housing.
3. Reinstall fuel pump as per procedure in this subsection.
4. Carry out a *FUEL SYSTEM HIGH PRESSURE LEAK TEST* as described in this subsection.
5. Install or other removed parts, refer to applicable subsection.

FUEL LEVEL SENSOR

Fuel Level System Overview

A float type fuel level sensor mounted on the fuel pump module sends a signal to the information center.

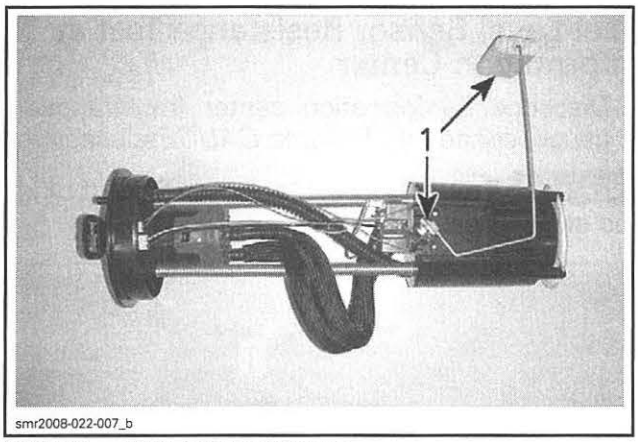

TYPICAL — FUEL PUMP MODULE
1. Fuel level sensor

The information center interprets this signal and turns on the appropriate number of segments of a bar type fuel level indication in the lower RH side of the digital screen in the information center.

Fuel Level Troubleshooting

FUEL LEVEL TROUBLESHOOTING	
SYMPTOM	POSSIBLE CAUSE
Fuel gauge always display EMPTY	– Wiring/connectors – Fuel level sensor – Float stuck in low position
Fuel gauge always display FULL	– Water in fuel pump connector – Float stuck in full position
Fuel level sensor fault code	– Wiring/connectors – Fuel level sensor
Fuel gauge displays wrong level	– Low battery voltage – Fuel level sensor fault

Use B.U.D.S. to check for a fault code. Refer to *DIAGNOSTIC AND FAULT CODES*.

Fuel Level Sensor Voltage Test

1. First ensure battery is fully charged.

Models with Suspension

2. Lift suspension to gain access.

NOTE: On RXT aS 260 model, if more height is required , manually lift suspension by the anchor points close to handlebar and safely lock in this position. Do not lift the watercraft from the anchor points.

Models Without Suspension

3. Disconnect the top of the two front air ventilation hoses, refer to *BODY* subsection.

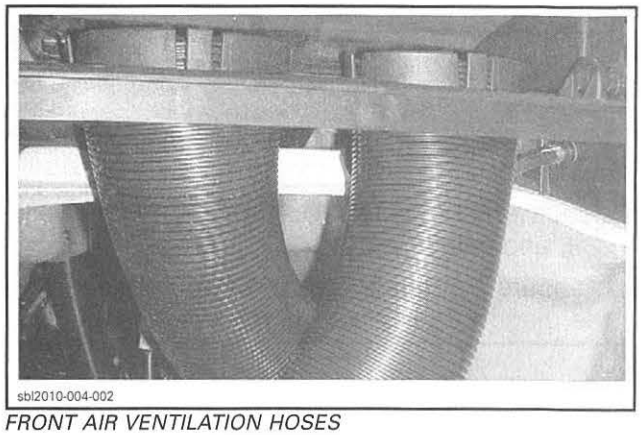

FRONT AIR VENTILATION HOSES

All Models

4. From under the steering support area, disconnect the 24-pin connector.

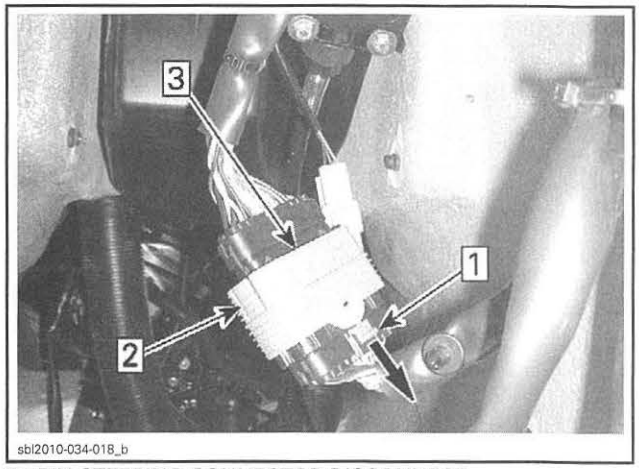

24-PIN STEERING CONNECTOR DISCONNECT
Step 1: Pull out safety lock
Step 2: Press in on release tab
Step 3: Pull locking collar down

5. Connect the DIAGNOSTIC HARNESS (P/N 529 036 188) to make an in-line connection between the disconnected connector.

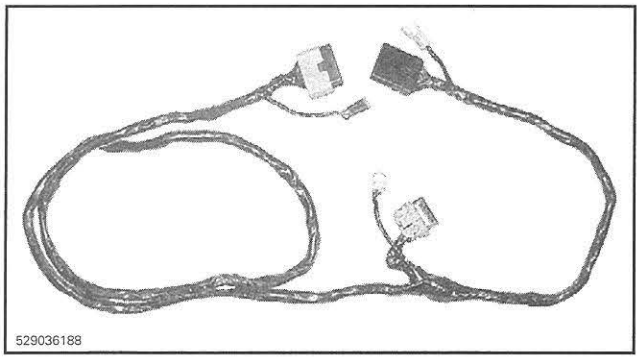

6. Briefly press the START button to wake up the ECM.
7. Install the tether cord on the engine cut-off switch.
8. Use the FLUKE 115 MULTIMETER (P/N 529 035 868) and select Vdc.
9. Measure the voltage at the test connector of the diagnostic harness as follows.

FUEL TANK LEVEL	TEST CONNECTOR OF DIAGNOSTIC HARNESS	VOLTAGE
Full	Pins 5 and 17	0.14 Vdc
Empty		2.7 Vdc

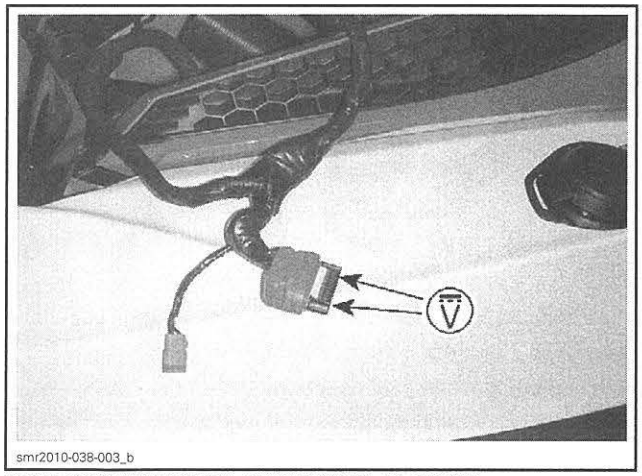

TEST CONNECTOR OF DIAGNOSTIC HARNESS

NOTE: Voltage could be slightly different depending on battery voltage but should remain relatively close to this range. If fuel tank is not full or empty, the voltage value will be proportional to the fuel level (somewhere in-between).

If voltage is as per specifications the fuel level circuit and sensor are good. If fuel level does not work in information center, try a new one.

If voltage is out of specifications, perform the *FUEL LEVEL SENSOR RESISTANCE TEST AT INFORMATION CENTER* as described in this subsection.

Remove diagnostic harness and reconnect connector.

Fuel Level Sensor Resistance Test at Information Center

1. Disconnect information center (multifunction gauge) connector. Refer to *GAUGE* subsection.

NOTICE **Pull connector lock out. Do not twist the screwdriver.**

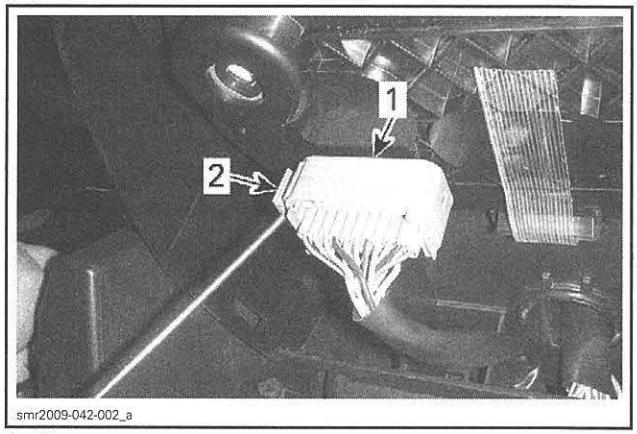

1. Gauge connector
2. Pull out to unlock connector

2. Use the FLUKE 115 MULTIMETER (P/N 529 035 868) and select Ω.
3. Alternately drain then fill fuel tank and measure the sensor resistance between pins 19 and 20 as follows.

RESISTANCE (Ω)	FLOAT HEIGHT (MM)
4.8 ± 2.2	268.9 ± 3.0 (FULL)
17.8 ± 2.2	240.6 ± 3.0
27.8 ± 2.2	219.1 ± 3.0
37.8 ± 2.2	193.8 ± 3.0
47.8 ± 2.2	161.9 ± 3.0 (HALF)
57.8 ± 2.2	128.3 ± 3.0
67.8 ± 2.2	94.1 ± 3.0
77.8 ± 2.2	60.6 ± 3.0

RESISTANCE (Ω)	FLOAT HEIGHT (MM)
89.8 ± 2.2	28.8 ± 3.0 (EMPTY)
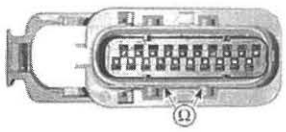	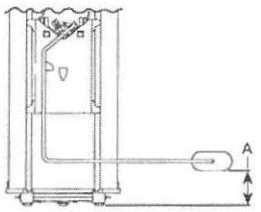 A. Float height

NOTE: If fuel tank is not full or empty, the resistance value will be proportional to the fuel level (somewhere in-between).

If readings are as per specifications, the fuel level circuit and sensor are good. If fuel level does not work in information center, try a new one.

If readings are out of specifications, perform the *FUEL LEVEL SENSOR RESISTANCE TEST AT FUEL PUMP.*

If an open circuit is measured, carry out a continuity test of the wiring from the information center to the 24-pin steering connector, and from the 24-pin steering connector to the fuel pump module connector. Refer to *WIRING DIAGRAM.*

If the wiring is good, carry out a *FUEL LEVEL SENSOR RESISTANCE TEST AT FUEL PUMP.*

4. Reconnect information center (multifunction gauge) connector.

Fuel Level Sensor Resistance Test at Fuel Pump

1. Disconnect fuel pump module connector.

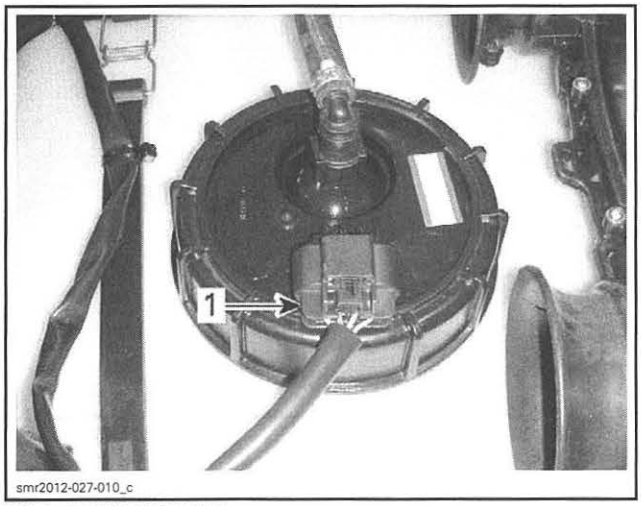

FUEL PUMP MODULE
1. Fuel pump module connector

2. Alternately drain then fill fuel tank and measure the sensor resistance between pins "C" and "D" of the fuel pump connector. See table in *FUEL LEVEL SENSOR RESISTANCE TEST AT INFORMATION CENTER.*

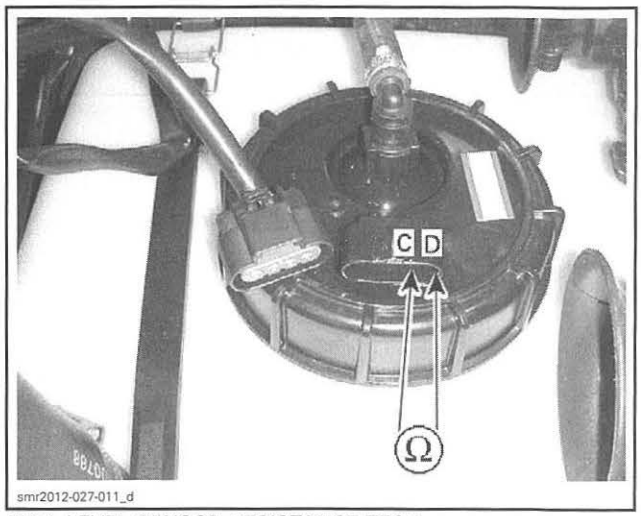

FUEL LEVEL SENSOR RESISTANCE TEST

If readings are out of specifications, replace sensor.

When everything else has been tested and fuel level is still not working, try a new information center.

Fuel Level Sensor Removal

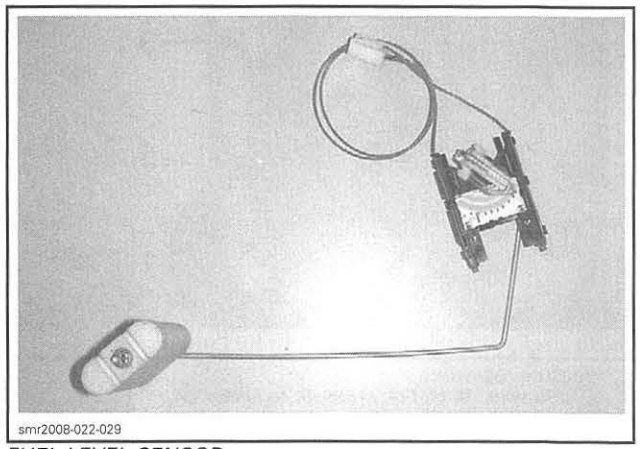

FUEL LEVEL SENSOR

1. Remove fuel pump module from fuel tank, see *FUEL PUMP REMOVAL* in this subsection.

⚠ WARNING

The upper filter and fuel pump reservoir on the fuel pump module contain fuel which will drain out when fuel pump module is not in an upright position.

2. Drain all fuel from the upper fuel filter and fuel pump reservoir in an appropriate container.

NOTE: Note routing of fuel level sensor wires prior to disconnecting the sensor from the fuel pump module flange.

3. Disconnect the fuel level sensor connector from the fuel pump module upper flange.

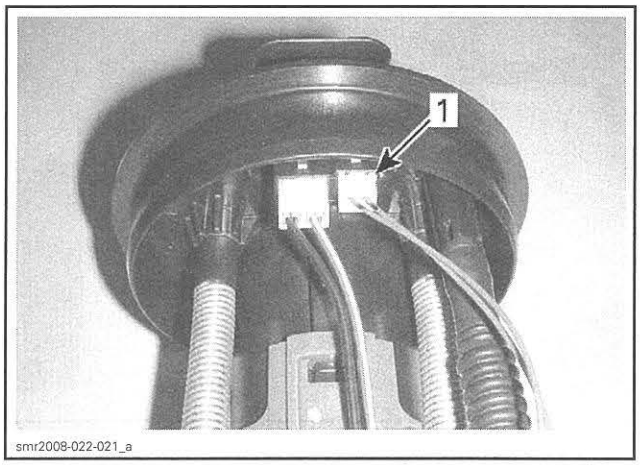

1. Fuel level sensor connector

4. Disconnect the ground wire from the pressure regulator. Be careful not to bend the ground contact on the pressure regulator.

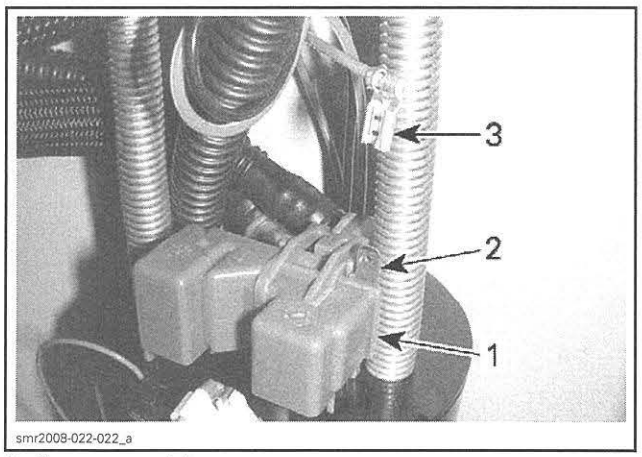

1. Pressure regulator
2. Ground wire contact on pressure regulator
3. Ground wire disconnected

5. Using a flat screwdriver, press down on the locking tab just below the pressure regulator to release it from the pump reservoir cover, and rotate it clockwise simultaneously so that it slips over the locking tab.

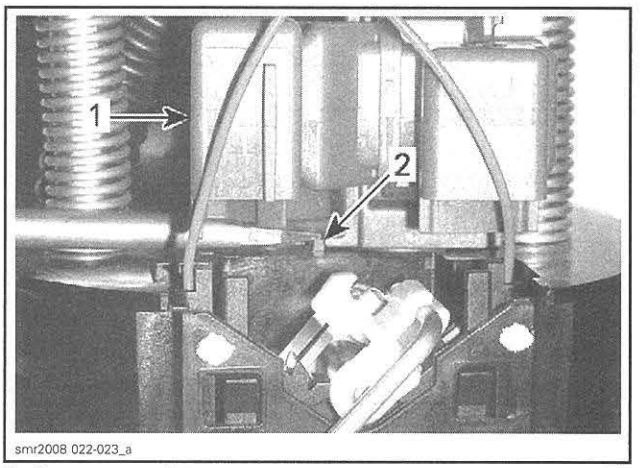

1. Pressure regulator
2. Pressure regulator locking tab

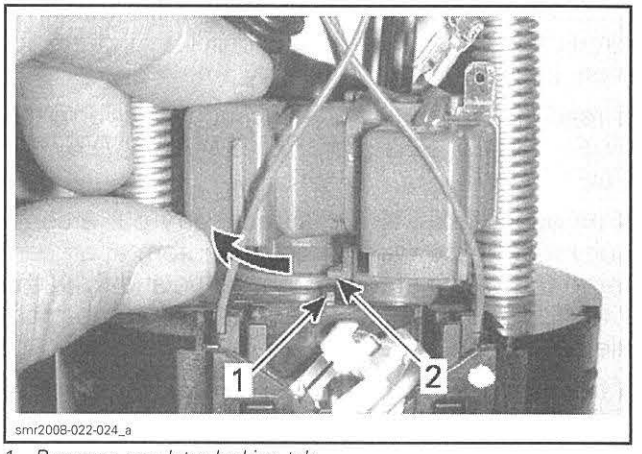

1. Pressure regulator locking tab
2. Pressure regulator rotated clockwise over locking tab

6. Once the pressure regulator is rotate over the locking tab, pull up on it to remove it from the pump reservoir cover.

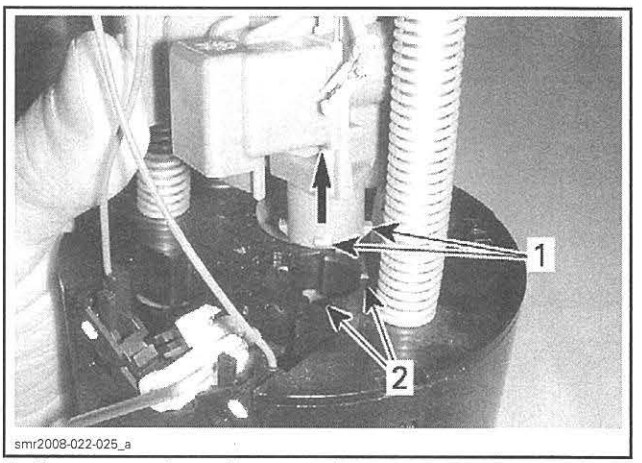

1. Pressure regulator alignment tabs
2. Fuel pump reservoir alignment tabs

NOTE: The pressure regulator cover must not be removed from the pressure regulator housing assembly.

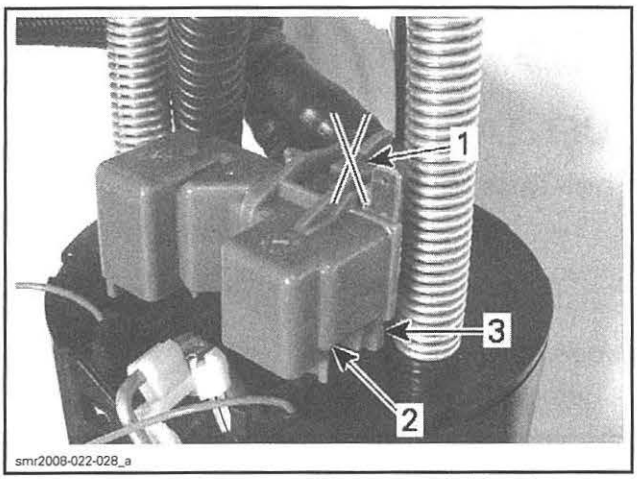

1. *Do not remove pressure regulator cover at locking tabs*
2. *Pressure regulator cover*
3. *Pressure regulator housing*

7. Push in on the release tabs at the top of the fuel level sensor to unlock it from the fuel pump reservoir housing, and simultaneously pull up on the fuel level sensor to remove it.

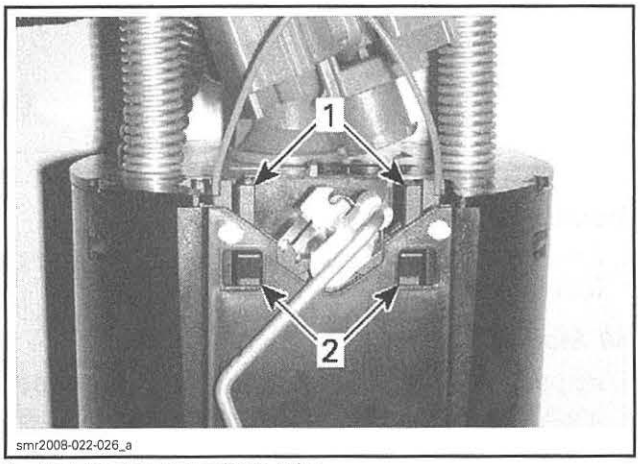

1. *Fuel level sensor release tabs*
2. *Locking pins*

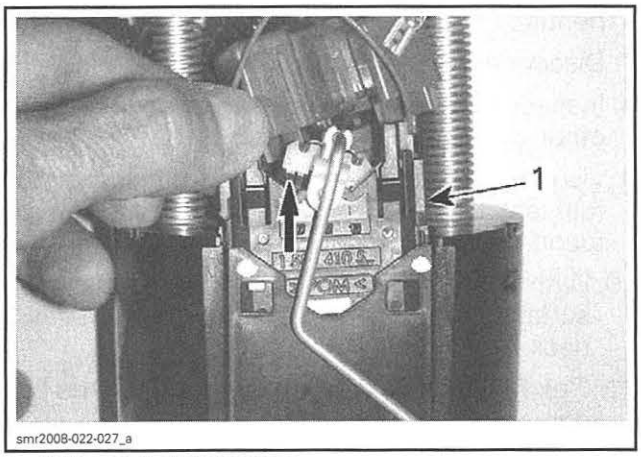

1. *Pull up on fuel level sensor*

Fuel Level Sensor Installation

Installation is the reverse of the removal procedure however, pay attention to the following.

1. Ensure fuel level sensor locking pins are properly engaged into the fuel pump reservoir.

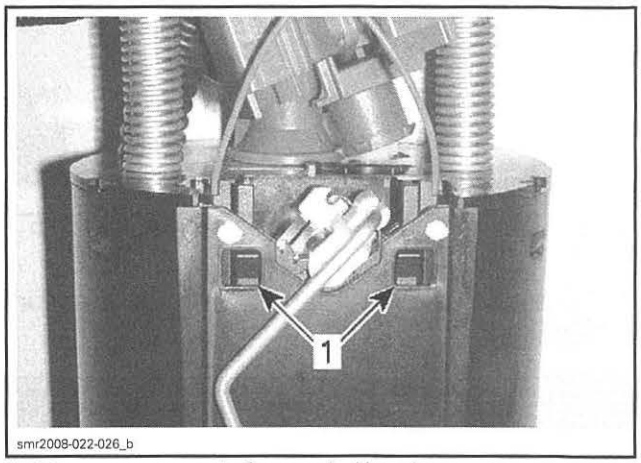

1. *Ensure engagement of sensor locking pins*

2. Align the fuel pressure regulator tabs into the pump reservoir cover and turn it counterclockwise until it locks properly.

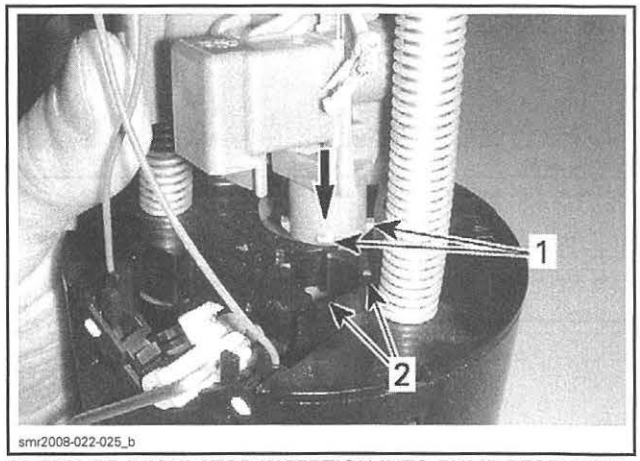

PRESSURE REGULATOR INSERTION INTO PUMP RESERVOIR COVER

1. *Pressure regulator alignment tabs*
2. *Fuel pump reservoir alignment tabs*

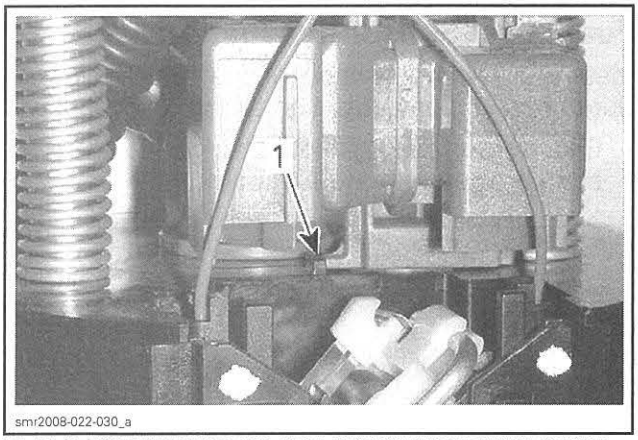

TAB UP WHEN PRESSURE REGULATOR PROPERLY LOCKED
1. Pressure regulator locking tab

3. Reconnect the ground wire onto the pressure regulator.

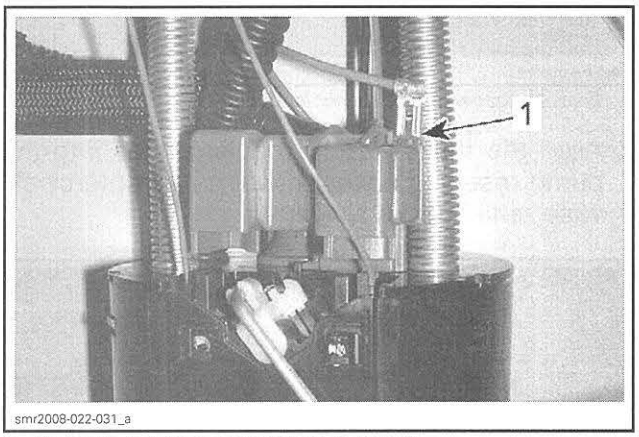

1. Pressure regulator ground wire installed

4. Ensure fuel level sensor connector is locked into the module flange connector.

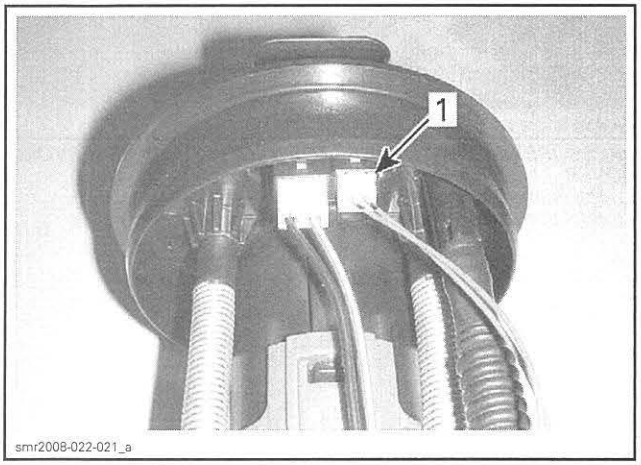

1. Fuel level sensor connector

5. Carry out a *FUEL LEVEL SENSOR RESISTANCE TEST* as described in this subsection.

6. Reinstall the fuel pump module. Refer to *FUEL PUMP INSTALLATION* in this subsection.

FUEL TANK

Fuel Tank Inspection

1. Open front storage compartment cover.
2. Remove storage bin or partitions. Refer to *BODY* subsection.

Models with Suspension

3. Remove front ventilation box.

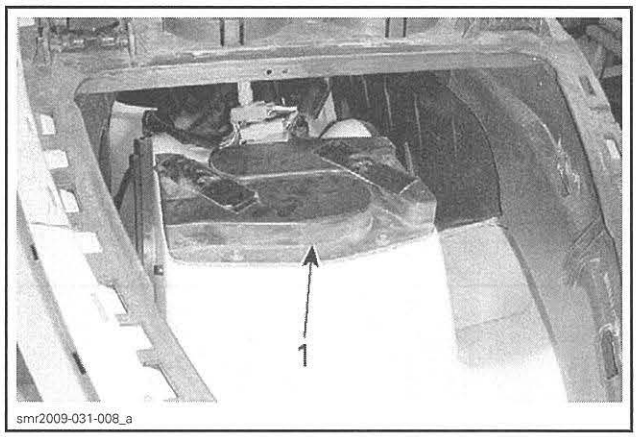

1. Ventilation box

Models Without Suspension

4. Open or remove seat for access to aft end of fuel tank.

All Models

5. Inspect fuel tank retaining straps for wear, cracks or any other damages. Inspect strap clip anchors and bolts.
6. Inspect fuel tank for wear caused by any abnormal contact or rubbing with other component(s).
7. Disconnect fuel filler hose from fuel tank.
8. Inspect fuel tank filler hose for wear, cracks or other damages.
9. Visually inspect the inside and outside of the fuel tank filler necks for crack(s). If crack(s) are found, replace fuel tank.
10. With your fingers, feel the inside and outside surfaces of fuel tank, especially near the filler neck.
11. Flex fuel tank neck to ensure there are no hidden cracks.

NOTE: A fuel tank is comprised of 2 components: the tank and the filler neck. The filler neck is injection molded and the tank is then blow molded over the neck. During the molding process, a small molding seam may appear on the inner side of the neck at approximately 4 mm (5/32 in) from the base of the neck. It is normal to have a molding seam and it should not be confused with a crack.

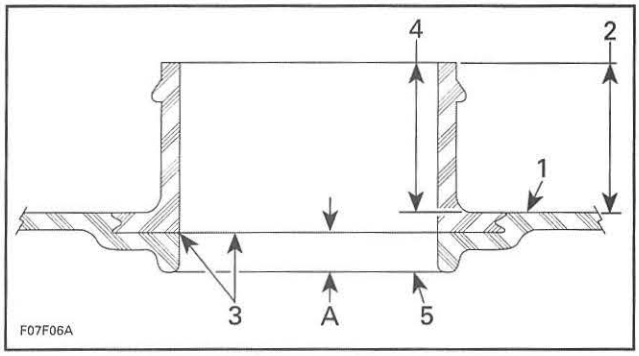

1. *Tank upper surface area*
2. *Inspect outer upper surface at filler neck*
3. *Normal molding seam*
4. *Inspect upper surface area inside filler neck*
5. *Base of filler neck*

A. *Approx. 4 mm (5/32 in)*

12. Install filler hose and torque retaining clamps.

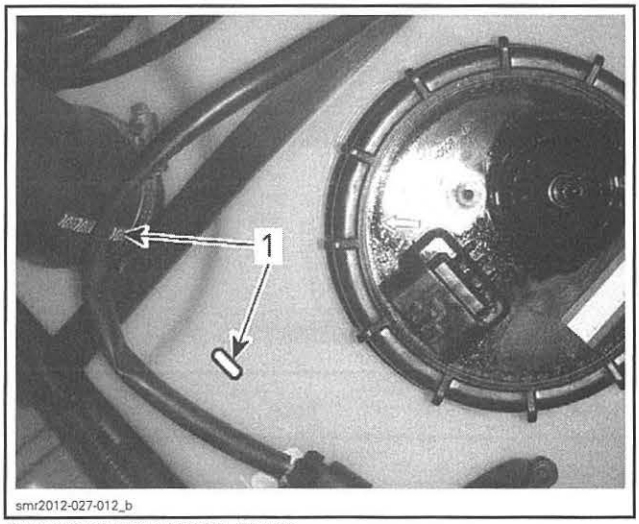

INDEXING WITH FUEL TANK
1. *Align mark with the writing on hose*

TORQUE	
Filler hose retaining clamps	3.5 N•m (31 lbf•**in**)

13. Reinstall all other removed parts. Refer to appropriate subsection.

Fuel Tank Removal

GTS/GTI Series, GTR, WAKE and RXP-X Series

1. Remove engine. Refer to *ENGINE REMOVAL AND INSTALLATION*.
2. Remove the air intake silencer. Refer to *AIR INTAKE SYSTEM (EXCEPT MODELS WITH SUSPENSION* subsection.

RXT/GTX Without Suspension

1. Remove the front body module. Refer to *BODY* subsection.
2. Remove the air intake silencer. Refer to *AIR INTAKE SYSTEM (EXCEPT iS AND aS MODELS)* subsection.

RXT/GTX with Suspension

1. Remove moving deck. Refer to *BODY* subsection.
2. Remove engine. Refer to *ENGINE REMOVAL AND INSTALLATION*.
3. Remove suspension base. Refer to *SUSPENSION*.

All Models

1. Siphon fuel tank.
2. Disconnect fuel pump connections.

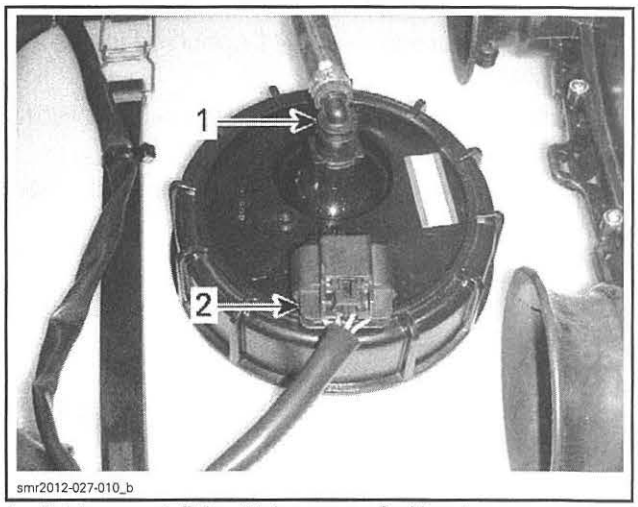

1. *Quick connect fitting (high pressure fuel hose)*
2. *Harness connector*

3. Disconnect filler hose from fuel tank.

NOTE: Removing retaining screws of the filler neck may help to disconnect hose from fuel tank.

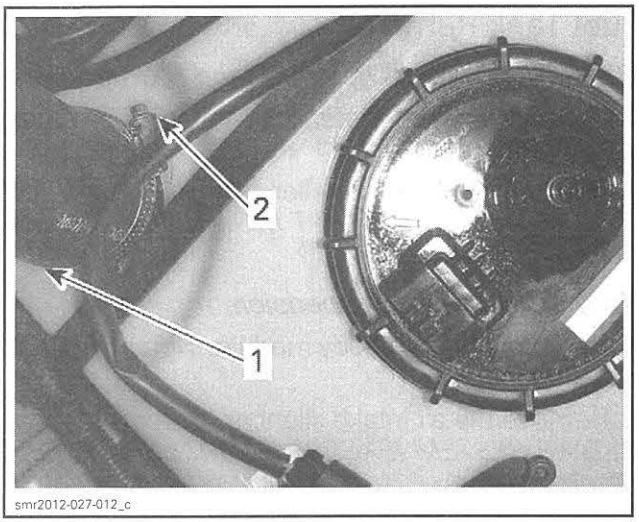

1. Filler hose
2. Retaining clamp

NOTE: Take note of wiring harness, hose and cable routing for proper reinstallation. Also note method used for securing with locking ties.

4. Detach fuel tank retaining straps.
5. Remove fuel tank from the vehicle.
6. Remove fuel pump as necessary. Refer to *FUEL PUMP* in this subsection.
7. Inspect hull and flotation foams for wear.

Fuel Tank Installation

NOTE: Apply torque values as specified in the exploded view.

1. Reinstall fuel pump if it was removed. Refer to *FUEL PUMP* in this subsection.
2. Ensure flotation foams are properly positioned under fuel tank.
3. Insert fuel tank in hull.

If anchoring clips have been removed, torque retaining screws to 10 N•m (89 lbf•**in**).

4. Place fuel tank retaining strap ends in anchoring clips. Temporarily use tape to hold straps on the top of fuel tank.

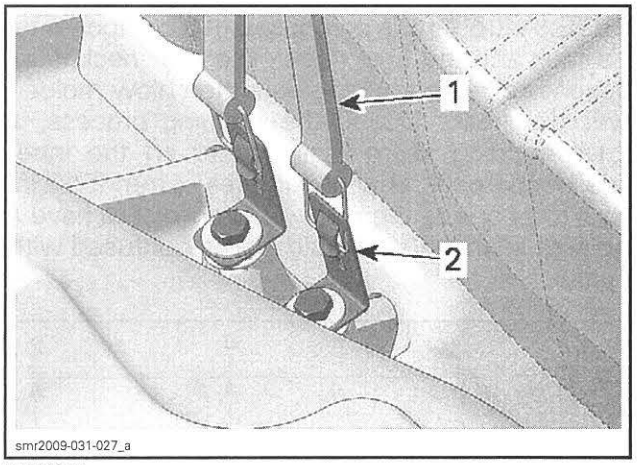

TYPICAL
1. Fuel tank retaining strap
2. Clip anchor securing strap to hull

5. Secure retaining strap ends on top of fuel tank.
6. Properly secure wire harness, cables and hose as prior to removal using appropriate locking ties.
7. Install fuel tank filler hose as illustrated.

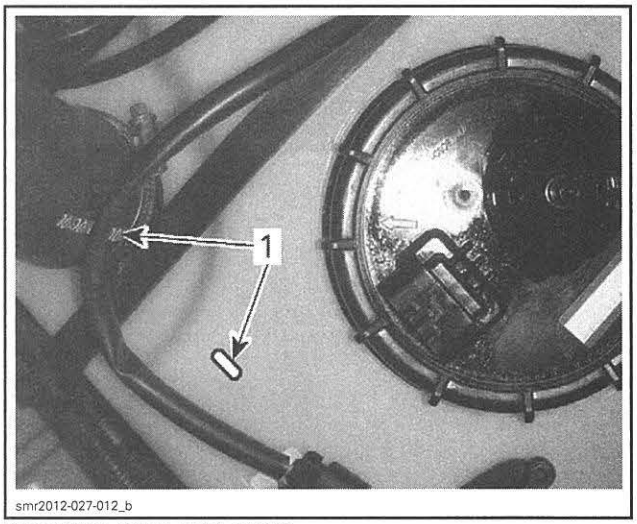

INDEXING WITH FUEL TANK
1. Align mark with the writing on hose

TORQUE	
Filler hose retaining clamps	3.5 N•m (31 lbf•**in**)

8. Reinstall all other removed parts. Refer to their subsections.
9. When vehicle reassembly is complete, carry out a *FUEL TANK LEAK TEST* and a *FUEL SYSTEM HIGH PRESSURE LEAK TEST* as described in this subsection.

POWER DISTRIBUTION AND GROUNDS

GENERAL

POWER DISTRIBUTION DIAGRAM

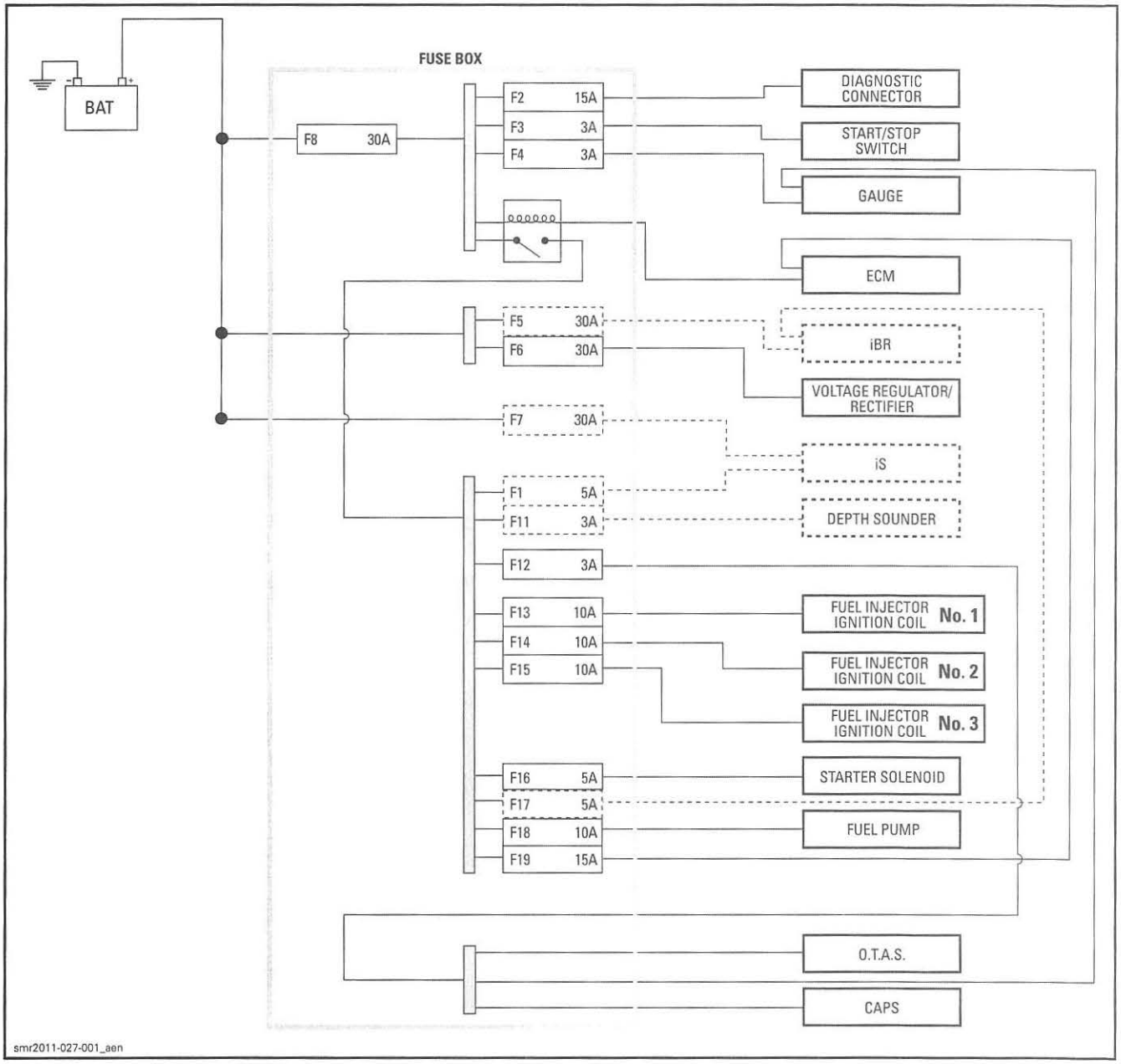

NOTE: Component shown in doted lines are not offered on all models.

ACRONYM DESCRIPTION	
CAPS: Camshaft position sensor	iS: Intelligent suspension
ECM: Engine control module	O.T.A.S.: Off throttle assisted steering
iBR: Intelligent brake and reverse	

FUSE BOX

Fuse Box Location (GTS, GTI, GTR, Wake and RXP Series)

To access the fuse box, open the front storage cover an remove the access panel.

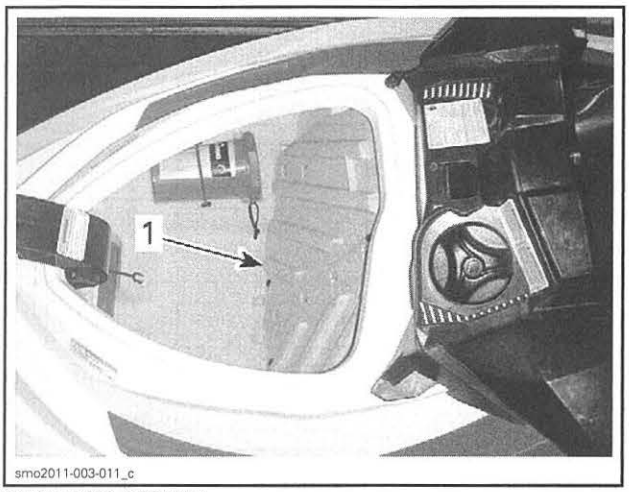

FUSE BOX ACCESS
1. *Access panel*

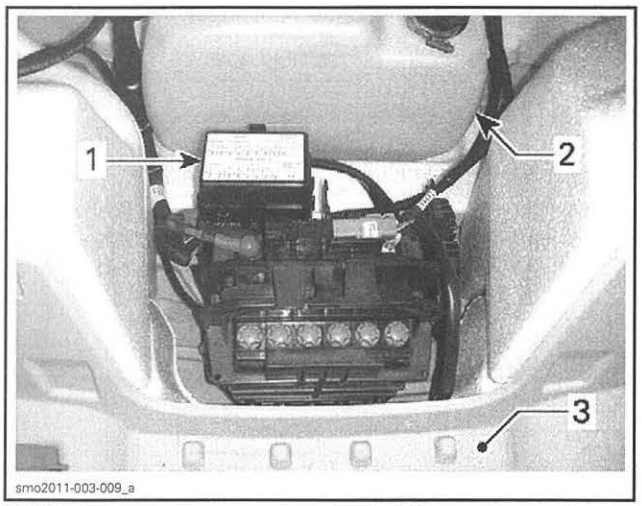

TYPICAL
1. *Fuse box*
2. *Fuel tank*
3. *Front storage compartment (access panel removed)*

Fuse Box Location (RXT, GTX and Wake Pro Series)

Models with Suspension

To access the fuse box, open the boarding platform and remove the RH storage bin.

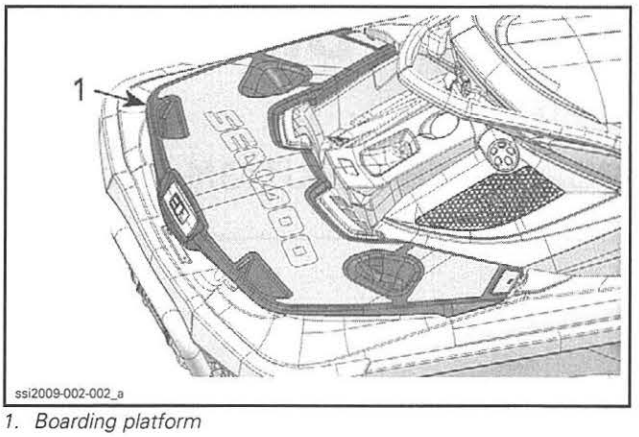

1. *Boarding platform*

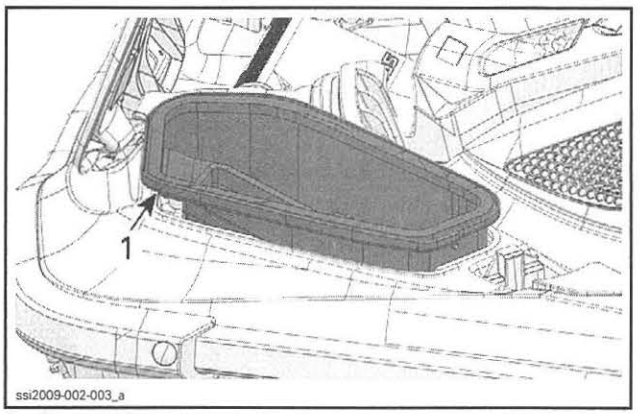

1. *Storage bin*

Models Without Suspension

To access the fuse box, open the starboard access panel on the rear deck.

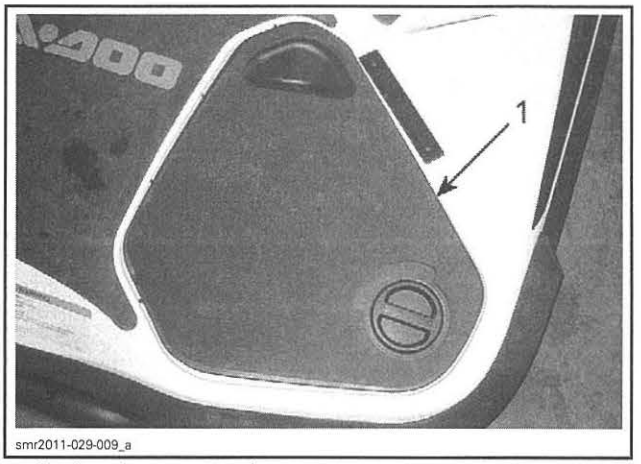

1. *Starboard access panel*

Fuse Identification

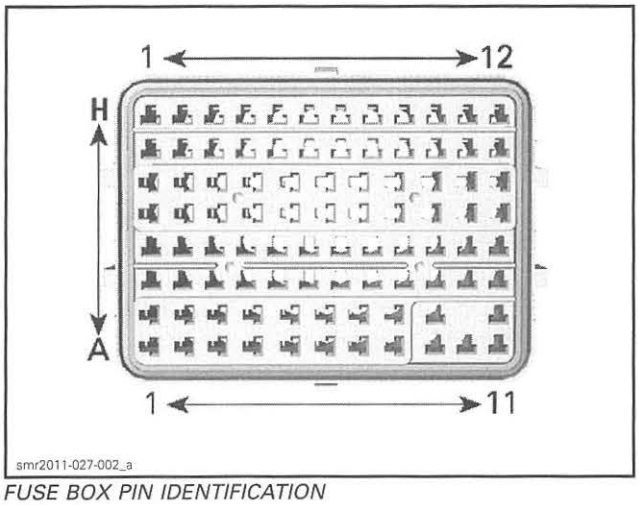

FUSE BOX PIN IDENTIFICATION

NOTE: This fuse box has rows of 11 or 12 cavities. See table below for details.

NUMBER OF CAVITIES BY ROW	
ROW	NUMBER OF CAVITIES
A-B	11
C-D	12
E-F	11
G-H	12

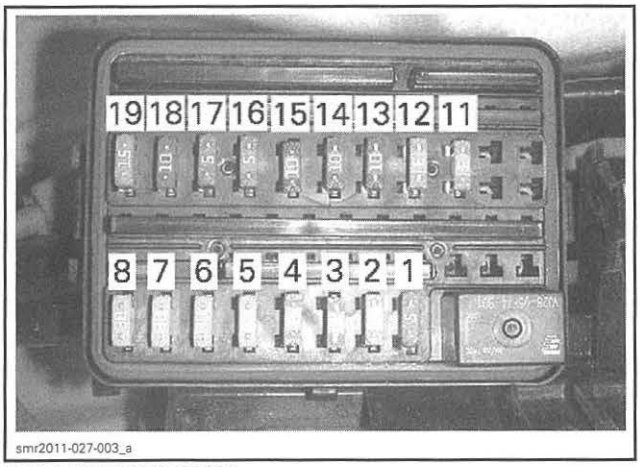

FUSE IDENTIFICATION

NO.	DESCRIPTION	
F1	Through relay: – iS control	5 A
F2	Direct power (through F8): – Diagnostic connector	15 A
F3	Direct power (through F8): – START/STOP	3 A
F4	Direct power (through F8): – Gauge constant power	3 A
F5	Direct power: – iBR power	30 A
F6	Direct power: – Voltage regulator/rectifier	30 A
F7	Direct power: – iS power	30 A
F8	– F2 – F3 – F4 – Relay	30 A
F11	Through relay: – Depth sounder	3 A
F12	Through relay: – O.T.A.S. – Gauge start up – CAPS	3 A
F13	Through relay: – Fuel injector cyl. 1 – Ignition coil cyl. 1	10 A
F14	Through relay: – Fuel injector cyl. 2 – Ignition coil cyl. 2	10 A
F15	Through relay: – Fuel injector cyl. 3 – Ignition coil cyl. 3	10 A
F16	Through relay: – Starter solenoid	5 A
F17	Through relay: – iBR control	5 A
F18	Through relay: – Fuel pump	10 A
F19	Through relay: – ECM power	15 A

RELAY

Relay Pin Identification

The relay is in the fuse box. Refer to *FUSE BOX LOCATION*.

RELAY PIN IDENTIFICATION		
FUNCTION	FUSE BOX PIN	CONDITION
12-volt input at winding	B9	Direct battery power from fuse F8
Control	A11	Grounded by ECM B pin H2 **once START/STOP is depressed**
12-volt input at contacts	A9	Direct battery power from fuse F8
12-volt output	B11	-

GROUNDS

Ground Location

All the ground terminals are located on the front of engine.

There is no splice in the ground wiring, the interconnections are made through a bus bar in the fuse box.

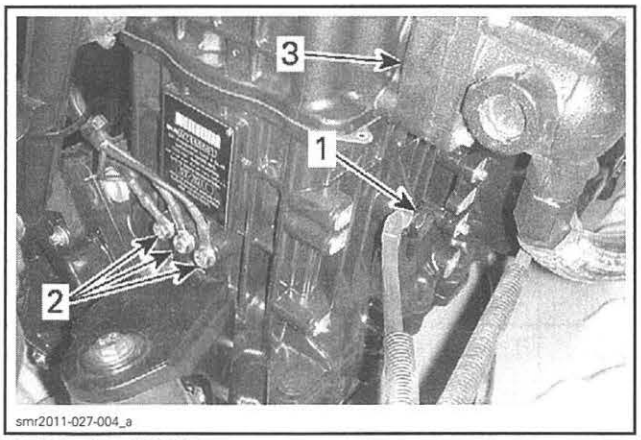

FRONT OF ENGINE
1. *Battery ground*
2. *Electrical components grounds*
3. *Exhaust manifold*

IGNITION SYSTEM

SERVICE TOOLS

Description	Part Number	Page
D.E.S.S. POST REMOVER	529 035 943	337
DIAGNOSTIC HARNESS	529 036 188	336–337
ECM ADAPTER TOOL	529 036 166	332, 337
FLUKE 115 MULTIMETER	529 035 868	331–332, 336–337

SERVICE PRODUCTS

Description	Part Number	Page
DOW CORNING 111	413 707 000	334

GENERAL

⚠ WARNING

Torque wrench tightening specifications must be strictly adhered to.
Locking devices when removed (e.g.: locking tabs, elastic stop nuts, self-locking fasteners, cotter pins, etc.) must be replaced.

Hoses, cables or locking ties removed during a procedure must be reinstalled as per factory standards.

⚠ WARNING

Never check for engine ignition spark from an open coil and/or spark plug as spark may cause potential fuel vapors to ignite. Always use an approved spark tester.

SYSTEM DESCRIPTION

The ignition system is a digital inductive type system.

Ignition system parameters such as ignition timing, spark duration, and firing order, as well as many other engine related functions are controlled by the engine management system (EMS) in order to meet engine operational requirements. The EMS can detect many abnormalities including a short circuit in the primary winding of the ignition coils as well as its associated circuits.

Three separate ignition coils receive power from three separate fuses.

When a ground signal is provided by the ECM to an ignition coil primary winding, a high voltage is induced in the coil secondary winding that is used to produce a spark at the spark plug electrode.

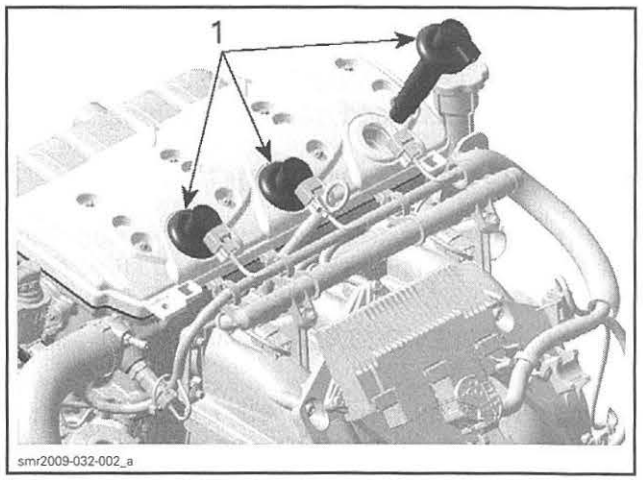

1. Ignition coils

Ignition Timing

Ignition timing is not adjustable.

The ECM is programmed with data (ignition mappings) that it uses to establish optimum ignition timing under all engine operating conditions.

It receives signals from a variety of sensors that it compares with the ignition mappings and uses it to control the ignition spark timing, duration and firing order.

The firing of each spark plug is independent of the others.

Engine RPM Limiter

The ECM will limit the maximum engine speed by cutting off ignition spark and fuel at a predetermined engine RPM.

ENGINE	RPM LIMITER
100, 130 and 155 HP	7750 RPM
215 and 260 HP	8300 RPM

Knock Sensor

A knock sensor is mounted on the cylinder block behind the intake manifold. It detects specific vibrations that would typically be generated by engine detonation.

If detonation occurs, the knock sensor detects it and the ECM goes into a specific operating mode whereby it temporarily retards the ignition advance until detonation stops.

The ECM is able to identify in which cylinder the knocking occurs and modifies the ignition advance on that cylinder only.

Refer to the *ELECTRONIC FUEL INJECTION (EFI)* section for testing and replacement procedures.

TROUBLESHOOTING

It is good practice to check for fault codes using the B.U.D.S. as a first troubleshooting step. Refer to *DIAGNOSTIC AND FAULT CODES* subsection.

Refer to *POWER DISTRIBUTION* for fuses and relay information.

Always refer to the *WIRING DIAGRAM* when troubleshooting an electrical circuit.

IGNITION SYSTEM TESTING

1. Ensure fuses F13, F14 and F15 are powered and in good condition.
2. If a fuse is burnt, test for a short circuit or faulty component on that fuse circuit before replacing the fuse.

⚠ WARNING

Due to the possibility of flammable vapors accumulating in the bilge, you should always test for a short circuit which may produce a spark and ignite the vapors before replacing a burnt fuse.

3. If there is no active fault code, start diagnostic by carrying out *IGNITION COIL TEST USING B.U.D.S.*
4. If a primary winding of an ignition coil or a circuit is at fault, a fault code will be set. Refer to *DIAGNOSTIC AND FAULT CODES* subsection.

DIAGNOSTIC GUIDELINES

The following is provided to help in diagnosing the probable cause of a problem. It is a guideline and should not be assumed to list all possible causes.

ENGINE WILL NOT STOP WHEN REMOVING KEY FROM ENGINE CUT-OFF SWITCH

1. Defective engine cut-off switch
   - *Check engine cut-off switch. Replace if necessary.*

ENGINE WILL NOT START (ENGINE TURNS OVER)

1. Fouled or defective spark plug
   - *Check spark plug condition. Replace if necessary.*
2. Defective CPS
   - *Test CPS, refer to ELECTRONIC FUEL INJECTION (EFI) subsection.*
3. Defective trigger wheel
   - *Check. Refer to PTO HOUSING/MAGNETO subsection.*
4. Defective ignition circuit
   - *Check fuses, ignition coils, wiring and connectors.*

ENGINE HARD TO START

1. Faulty, fouled or worn out spark plug
   - *Check spark plug condition. Replace if necessary.*
2. Drowned engine
   - *Check engine temperature value using B.U.D.S. monitoring page. If the temperature read is lower than the ambient temperature, CTS sensor may be defective or have a bad connection. Therefore, the ECM would erroneously set the engine in cold start mode and it could flood the spark plugs.*

ENGINE MISFIRES, RUNS IRREGULARLY

1. Fouled, defective, worn spark plugs
   - *Check spark plug condition. Replace if necessary.*
2. Defective T.O.P.S. sensor
   - *Test T.O.P.S. Refer to LUBRICATION subsection.*
3. Damaged trigger wheel/loose CPS
   - *Check. Refer to PTO HOUSING/MAGNETO subsection.*
4. Defective ignition circuit
   - *Check fuses, ignition coils, wiring and connectors.*

5. Poor engine grounds
   - *Check ground condition, refer to POWER DISTRIBUTION AND GROUNDS subsection.*

ENGINE CONTINUALLY BACKFIRES

1. Fouled, defective spark plugs
   - *Check spark plug condition. Replace if necessary.*
2. Damaged trigger wheel/defective or loose CPS
   - *Check, refer to PTO HOUSING/MAGNETO and ELECTRONIC FUEL INJECTION (EFI) subsections.*

ENGINE DETONATION OR PINGING

1. Faulty or disconnected knock sensor
   - *Check, refer to ELECTRONIC FUEL INJECTION (EFI) subsection.*

ENGINE LACKS ACCELERATION OR POWER

1. Weak spark
   - *Check spark plugs, coils, wiring and connections.*

PROCEDURES

IGNITION COILS

⚠ WARNING

Never check for engine ignition spark from an open coil and/or spark plug in the engine compartment as a spark may cause fuel vapors which may have accumulated in the bilge to ignite.

Ignition Coil Access

1. Open or remove seat.

Models with a Suspension

2. Remove the rear ventilation cover.

All Models

Ignition coils are located on top of the valve cover.

NOTE: Some models have an engine cover that has to be removed to access the ignition coils.

Ignition Coil Test Using B.U.D.S.

1. Connect to the latest applicable B.U.D.S. software. Refer to *COMMUNICATION TOOLS AND B.U.D.S.* section.
2. Select the **Activation** and **ECM** tabs.
3. Energize the ignition coil to be tested by clicking on the corresponding illustration.

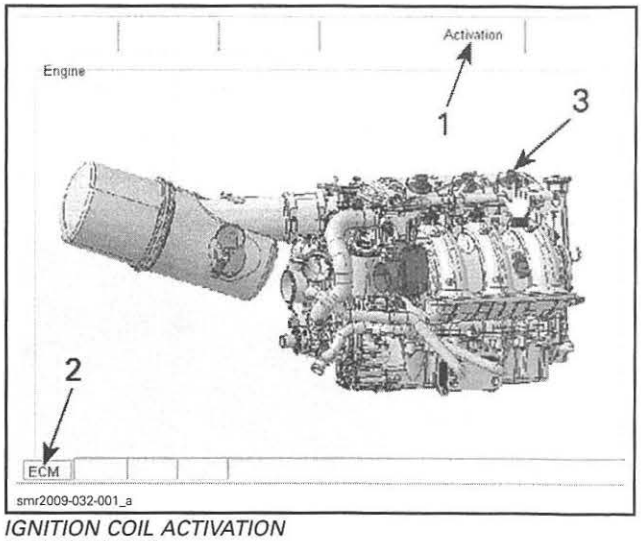

IGNITION COIL ACTIVATION
1. *Activation tab*
2. *ECM tab*
3. *Click on the desired ignition coil*

You should hear the spark occurring. If in doubt, use a sealed **vapor proof** spark tester or an inductive spark tester as available from tool suppliers, to prevent a spark from occurring in the bilge.

If there is no ignition at one or more coils, carry out a *IGNITION COIL INPUT VOLTAGE TEST.*

If spark is weak, try a new spark plug. If spark is still weak, try a new ignition coil.

NOTE: The voltage required to produce a spark in the combustion chamber is higher when the engine is running.

Ignition Coil Input Voltage Test

Make sure fuses F13, F14 and F15 are good before testing.

1. Disconnect the applicable ignition coil connector.
2. Remove tether cord from the engine cut-off switch.
3. Set the FLUKE 115 MULTIMETER (P/N 529 035 868) to Vdc.
4. Press the START button to activate the ECM.
5. Measure voltage within 3 minutes after depressing START/STOP button.

TEST PROBES		VOLTAGE
VIOLET/BLUE wire (ignition coil no. 1)	Battery ground	Battery voltage
VIOLET/GREEN wire (ignition coil no. 2)		
VIOLET/ORANGE wire (ignition coil no. 3)		

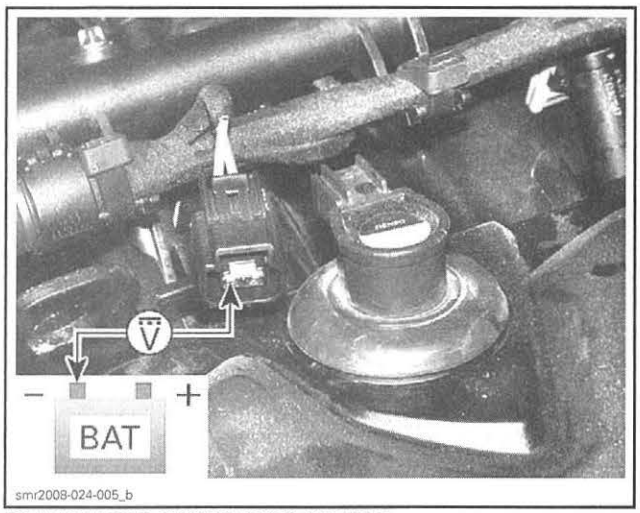

IGNITION COIL INPUT VOLTAGE TEST

If test succeeds, carry out an *IGNITION COIL RESISTANCE TEST.*

If test fails, carry out an *IGNITION COIL POWER CIRCUIT CONTINUITY TEST.*

Ignition Coil Power Circuit Continuity Test

1. Remove fuses F13, F14 and F15.

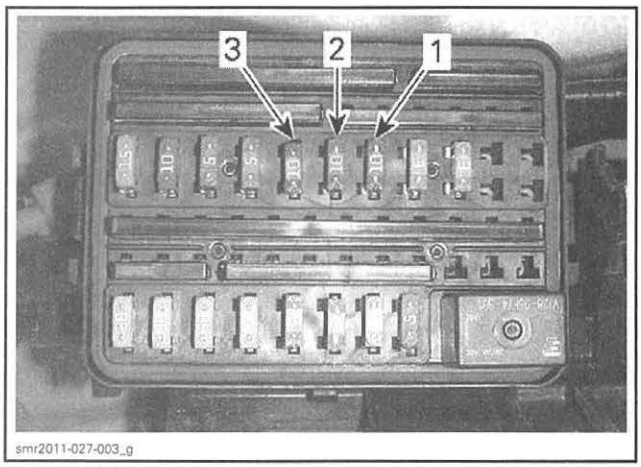

1. *Fuse F13*
2. *Fuse F14*
3. *Fuse F15*

2. Use the FLUKE 115 MULTIMETER (P/N 529 035 868) and select Ω.

3. Read resistance of the desired ignition coil circuit.

IGNITION COIL	IGNITION COIL WIRE	FUSE BOX	MEASUREMENT
1 (rear)	VI/BU	Terminal F7	Close to 0 Ω
2	VI/GN	Terminal F6	
3	VI/OR	Terminal F5	

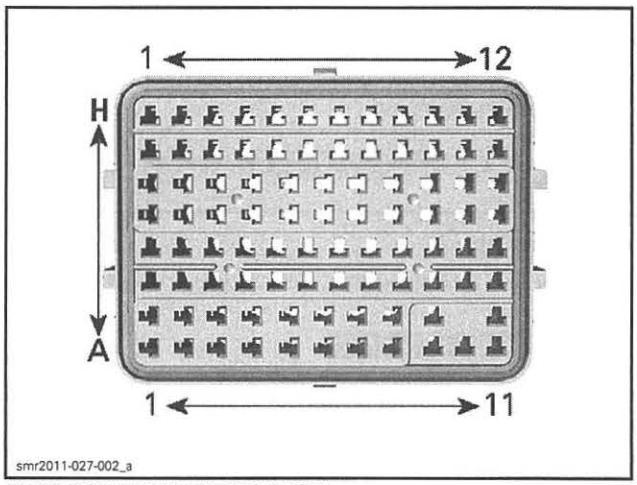

FUSE BOX PIN IDENTIFICATION

If test fails at any ignition coil, test the following items separately and repair/replace wiring or terminals from fuse box to the applicable ignition coil.

- Wiring from fuse box to engine C04-4POS connector
- Wiring from C04-4POS connector to ignition coil.

Refer to *WIRING DIAGRAM* for details.

Ignition Coil Control Circuit Continuity Test

1. Disconnect ECM connector "A". For connector identification, refer to *WIRING HARNESS AND CONNECTOR* subsection.
2. Connect ECM connector to the ECM ADAPTER TOOL (P/N 529 036 166).

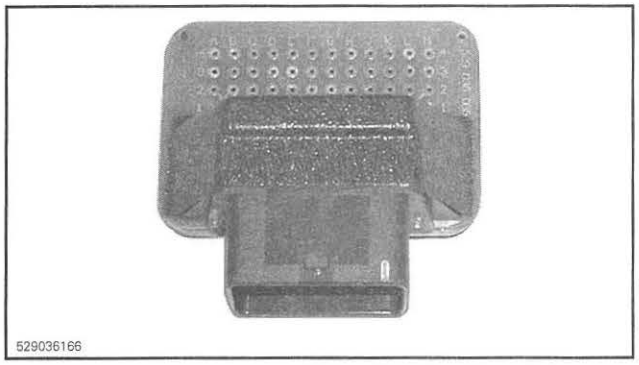

3. Disconnect ignition coil connector.
4. Test for continuity of circuit as per following table.

COIL	IGNITION COIL WIRE	ECM ADAPTER	RESIDTANCE
Cylinder 1 (rear)	BR/BK	A-M4	Close to 0 Ω (continuity)
Cylinder 2	BR/OR	A-M2	
Cylinder 3	BR/YL	A-M1	

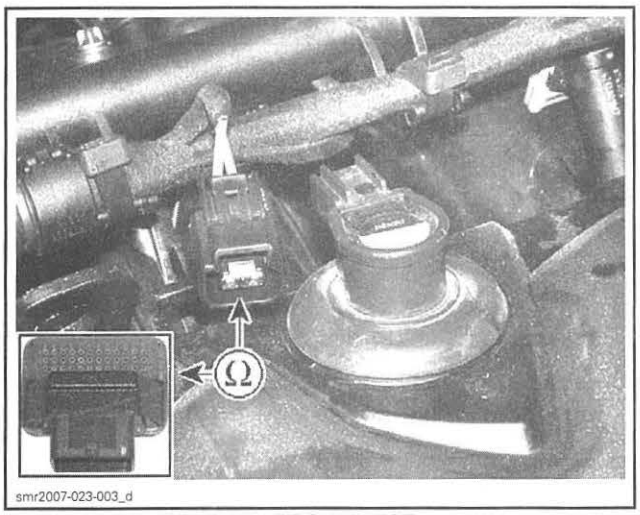

IGNITION COIL CONTROL CIRCUIT TEST

If test fails, repair the connector or replace the engine wiring harness.

Ignition Coil Resistance Test

An ignition coil with a good resistance measurement can still be faulty. Current leakage can occur at high voltage levels which is not detectable with an ohmmeter. Replacing the ignition coil may be necessary as a test.

1. Remove ignition coil. Refer to *IGNITION COIL REMOVAL* in this subsection.
2. Perform a visual inspection of the ignition coils. Check for corrosion, bent pins, loose or burnt contacts, and cracked or torn insulator.
3. Using a multimeter, test the resistance in both primary and secondary windings.

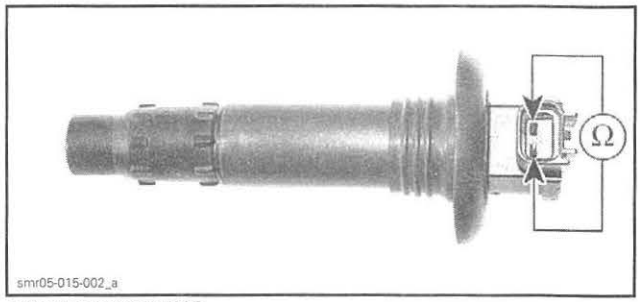

PRIMARY WINDING

CIRCUIT	TERMINAL	RESISTANCE @ 20°C (68°F)
Primary winding	1 and 2	0.85 - 1.15 Ω

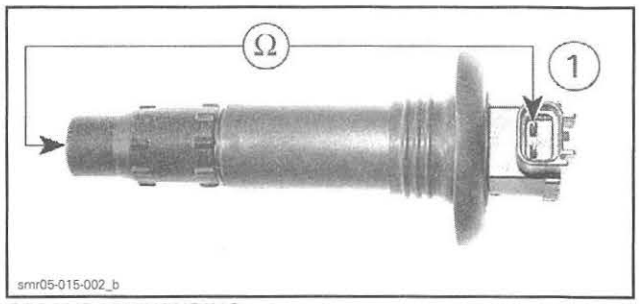

SECONDARY WINDING

CIRCUIT	TERMINAL	RESISTANCE @ 20°C (68°F)
Secondary winding	1 and spark plug terminal	9.5 - 13.5 kΩ

If any test fails, replace ignition coil.

If test succeeds, carry out an *IGNITION COIL CONTROL CIRCUIT CONTINUITY TEST.*

Ignition Coil Removal

1. Disconnect ignition coil connector.

NOTICE **Do not remove the ignition coil before disconnecting the input connector or the wires may be damaged. Do not pry up ignition coil with a screwdriver to avoid damage.**

NOTE: Twist ignition coil in both directions as you pull it up to ease removal.

2. Remove ignition coil from spark plug.

Ignition Coil Lubrication

1. Push rubber seal down.

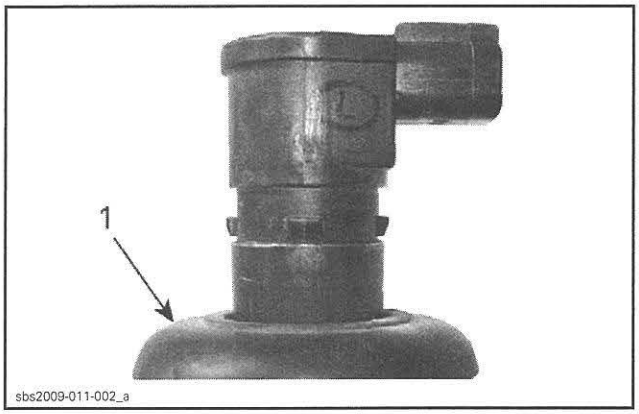

1. Rubber seal pulled down

2. Apply DOW CORNING 111 (P/N 413 707 000) to rubber seal seat as shown.

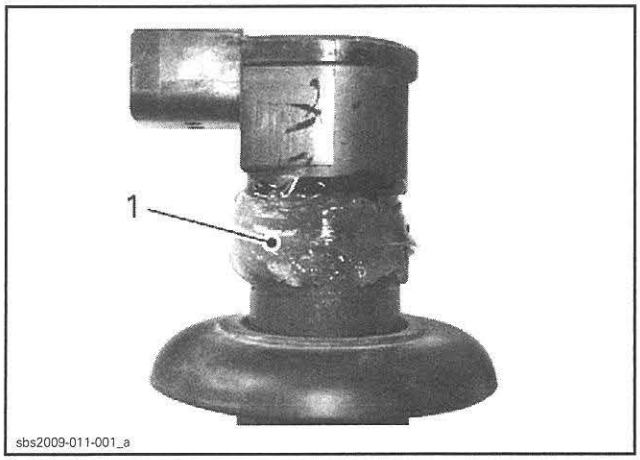

1. Apply product here

3. Pull rubber seal back on its seat making sure the tabs on the ignition coil and the slots in the seal properly match together.
4. Leave a ring of grease on top of the seal as shown to act as a water barrier. Wipe off the excess.

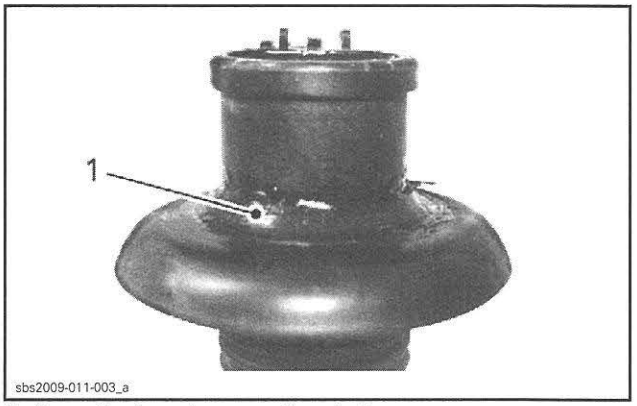

1. Correctly shaped excess of product

5. Apply DOW CORNING 111 (P/N 413 707 000) on rubber seal contact area.

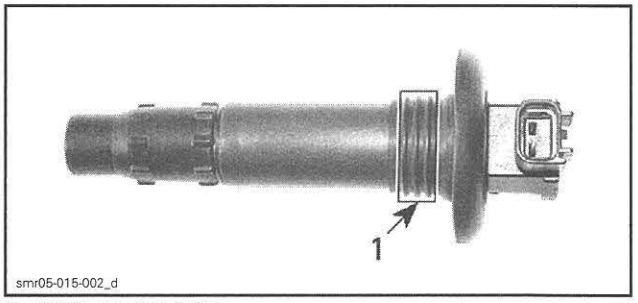

1. Apply product here

Ignition Coil Installation

NOTE: Prior to inserting the ignition coil on its spark plug, apply sealant as described in *IGNITION COIL LUBRICATION.*

1. Install coil in cylinder head hole.
2. Push the ignition coil down to securely install it on the spark plug tip.
3. Ensure the seal seats properly with top surface of engine valve cover.

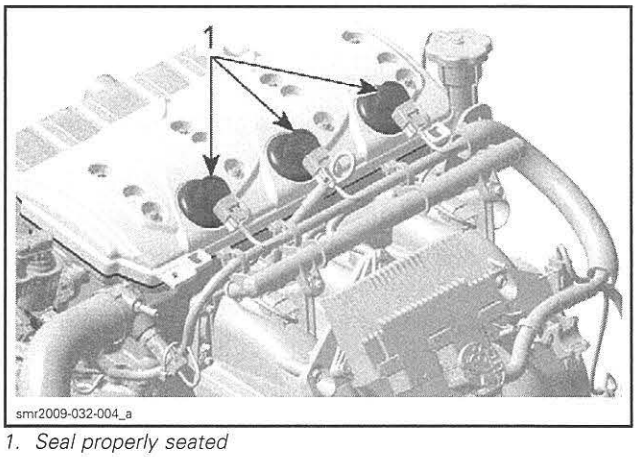

1. Seal properly seated

SPARK PLUGS

Spark Plug Removal

1. Remove ignition coil. Refer to *IGNITION COIL REMOVAL* in this subsection.

⚠ WARNING

Never remove an ignition coil from a spark plug without disconnecting it from the wiring harness. Flammable vapors may be present in the bilge. Should the tether cord be installed on the engine cut-off switch, a spark could be generated at the spark plug end of the coil possibly resulting in an explosion.

2. Using a spark plug socket, release the torque applied to the spark plug.

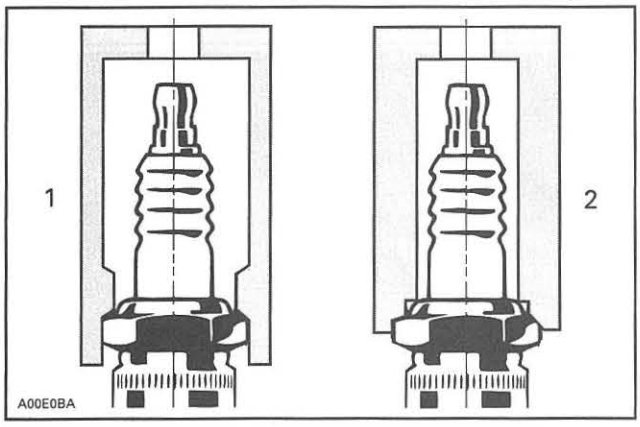

1. Approved socket
2. Improper socket

3. Clean the spark plug and cylinder head with pressurized air.
4. Unscrew spark plug then use the ignition coil to take spark plug out of spark plug hole.

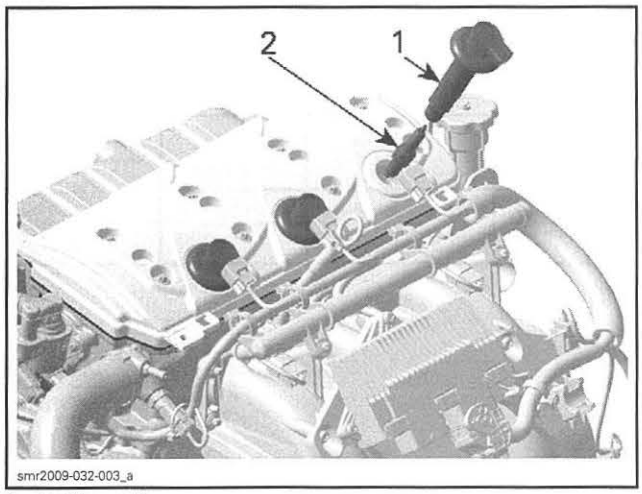

1. Ignition coil
2. Spark plug

Troubleshooting a Fouled Spark Plug

Fouling of the spark plug is indicated by irregular running or misfiring of the engine, decreased engine speed due to misfiring, reduced performance, and increased fuel consumption.

Other possible causes are: use of an incorrect or bad fuel, defective ignition system, incorrect spark plug gap, loss of compression, or lubricating oil entering the combustion chamber.

The plug face of a fouled spark plug has either a wet or dry black carbon deposit. Such coatings form a conductive connection between the center electrode and the ground electrode.

Spark Plug Analysis

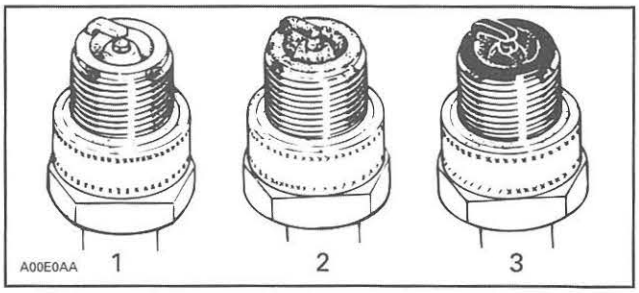

TYPICAL
1. Overheated (light gray, white)
2. Normal (light brown, brown)
3. Fouled (black, wet or dry, dark deposits, gray, melted coating)

The plug face reveals the condition of the engine, operating condition, method of driving and fuel mixture. For this reason it is advisable to inspect the spark plug at prescribed intervals, examining the plug face (i.e. the part of the plug projecting into the combustion chamber).

Spark Plug Installation

Prior to installation, ensure the contact surfaces of the cylinder head and spark plug are free of grime.

1. Using a wire feeler gauge, set electrode gap as specified in the following chart.

ENGINE	SPARK PLUG	TORQUE	GAP MM (IN)
1503	NGK DCPR8E	Hand tighten + 1/4 turn with a socket	0.75 (.030)

2. Apply anti-seize lubricant over the spark plug threads to prevent possible seizure.
3. Hand screw spark plug into cylinder head. Then, tighten the spark plug clockwise an additional 1/4 turn with an approved spark plug socket.

4. Install ignition coil. Refer to *IGNITION COIL INSTALLATION* in this subsection.
5. Complete the installation in the reverse order of the removal.

ENGINE CUT-OFF SWITCH

Continuity Test of Engine Cut-Off Switch

1. Disconnect the 24-pin steering connector from the vehicle harness. Refer to *START/STOP SWITCH* in the *STARTING SYSTEM* subsection for details.

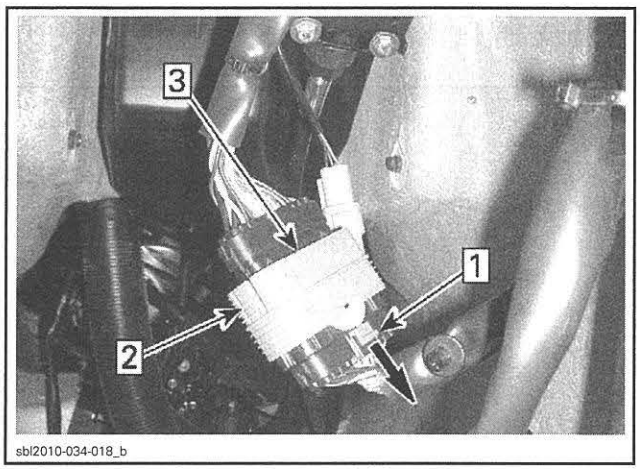

sbl2010-034-018_b

24-PIN STEERING CONNECTOR DISCONNECT
Step 1: Pull out safety lock
Step 2: Press in on release tab
Step 3: Pull locking collar down

2. **IMPORTANT:** Connect the DIAGNOSTIC HARNESS (P/N 529 036 188) to the 24-pin steering connector only, **NOT** to the vehicle harness connector.

REQUIRED TOOLS
DIAGNOSTIC HARNESS (P/N 529 036 188)
FLUKE 115 MULTIMETER (P/N 529 035 868)

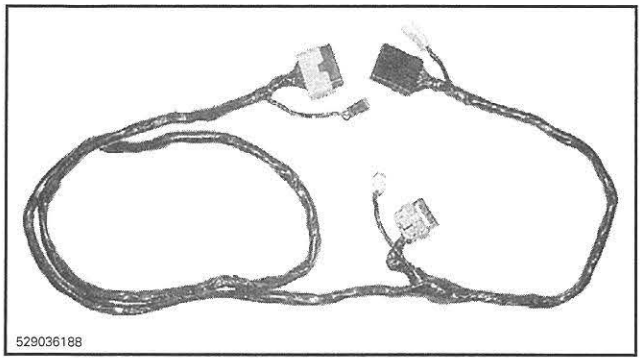
529036188


529035868

NOTICE **Do not attempt to probe the 24-pin connector on the watercraft. Use the test connector on the diagnostic harness.**

3. Set multimeter to Ω.
4. Probe test connector on diagnostic harness to check continuity as follows.

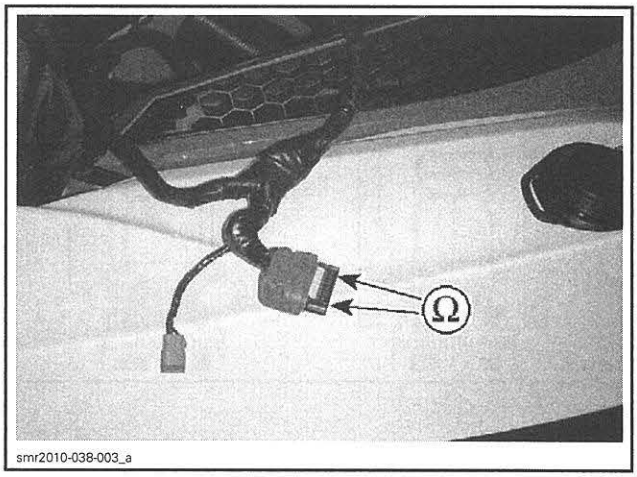

smr2010-038-003_a

D.E.S.S. KEY	24-PIN TEST CONNECTOR		ENGINE CUT-OFF SWITCH	READING @ 20°C (68°F)
Removed	Pin 13	Pin 11	–	Open circuit
	Pin 14	–	Center contact	Close to 0 Ω
	Pin 13	–	Ring contact	
Installed	Pin 13	Pin 11	–	

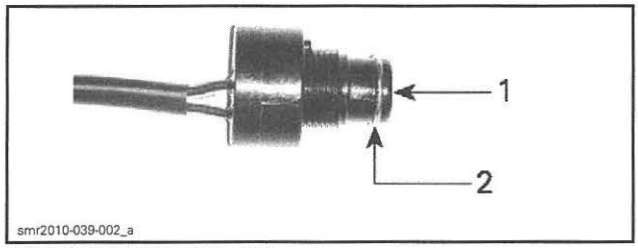

ENGINE CUT-OFF SWITCH
1. *Center contact*
2. *Ring contact*

If any continuity test fails, replace engine cut-off switch.

If all readings were as specified, carry out the *CONTINUITY TEST OF VEHICLE HARNESS TO ENGINE CUT-OFF SWITCH*.

Continuity Test of Vehicle Harness to Engine Cut-Off Switch

1. Disconnect the 24-pin steering connector. Refer to *START/STOP SWITCH* in the *STARTING SYSTEM* subsection for details.

REQUIRED TOOLS
DIAGNOSTIC HARNESS (P/N 529 036 188)
FLUKE 115 MULTIMETER (P/N 529 035 868)
ECM ADAPTER TOOL (P/N 529 036 166)

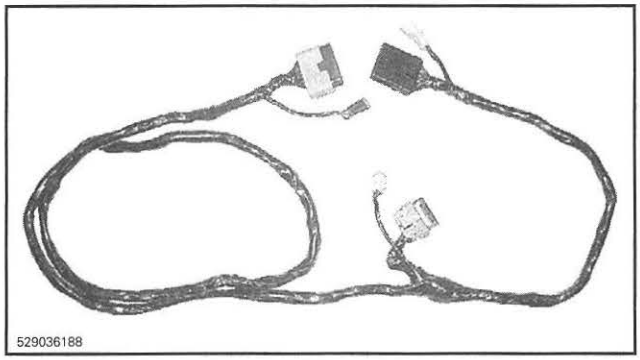



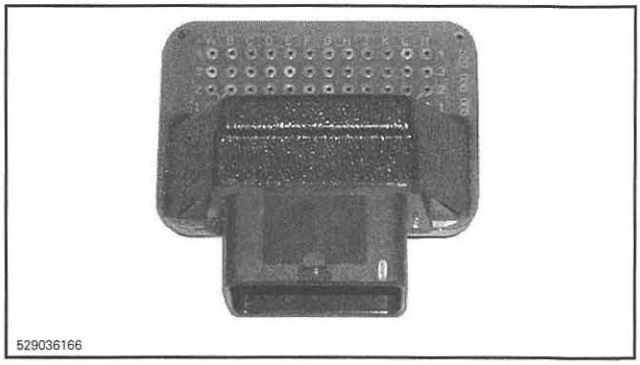

2. Connect the DIAGNOSTIC HARNESS (P/N 529 036 188) to the 24-pin vehicle harness connector only, **NOT** to the steering harness connector.
3. Disconnect connector "B" from ECM. Refer to *WIRING HARNESS AND CONNECTOR* subsection.
4. Install the ECM ADAPTER TOOL (P/N 529 036 166) on ECM connector "B".
5. Probe test connector as follows.

24-PIN TEST CONNECTOR	ECM ADAPTER TOOL	READING
11	B-E4	Close to 0 Ω
14	B-B2	
13	B-F2	

If any continuity test failed, check wiring harness between 24-pin steering connector and ECM connector.

If problem persists and all tests have been performed, try a new ECM. Refer to *ELECTRONIC FUEL INJECTION (EFI)* subsection.

6. Reconnect 24-pin steering harness connector.
7. Reinstall removed components.

Engine Cut-Off Switch Replacement

REQUIRED TOOL
D.E.S.S. POST REMOVER (P/N 529 035 943)

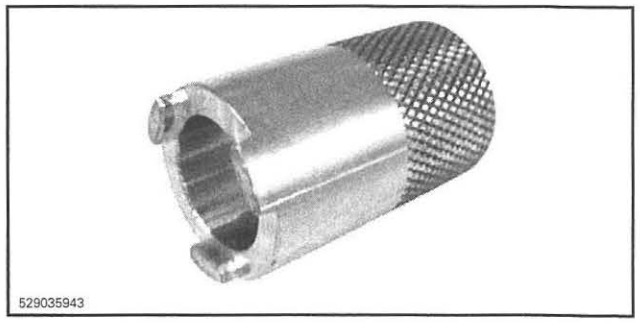

CHARGING SYSTEM

SERVICE TOOLS

Description	Part Number	Page
VACUUM/PRESSURE PUMP	529 021 800	355

SERVICE TOOLS – OTHER SUPPLIER

Description	Part Number	Page
ELECTRO SPECIALTIES BATTERY LOAD TESTER	710	349
EXTECH INDUCTIVE AMMETER	380941	340

GENERAL

NOTICE **When performing a test on iS models with the engine running above approximately 4500 RPM for 3 seconds, be aware that the suspension will move to its predefined up position and then stop in that position. Wait until suspension is stopped before working on the watercraft. Keep away from moving parts.**

SYSTEM DESCRIPTION

The purpose of the charging system is to maintain the battery at a full state of charge and to provide the electrical system with the required electrical power for normal vehicle operation.

Magneto

The magneto is the primary source of electrical energy. It transforms a magnetic field into an electric current (AC).

The magneto has a 3 phase, delta wound, 18 pole stator that is rated at 380 watts.

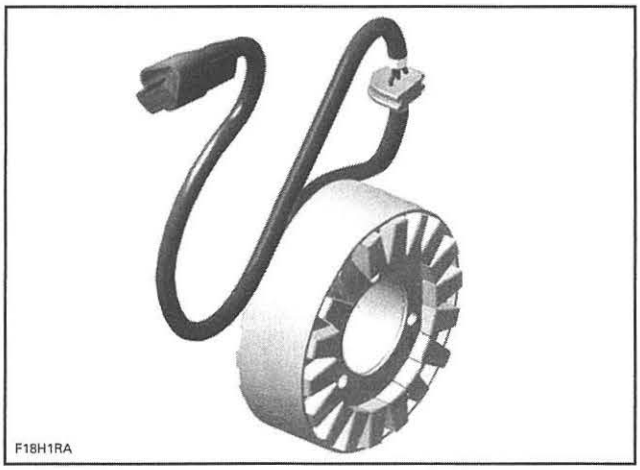

TYPICAL

Voltage Regulator/Rectifier

The rectifier receives AC current from the magneto and transforms it into direct current (DC).

The voltage regulator, included in the same unit, limits voltage to a maximum level to prevent any damage to electrical components.

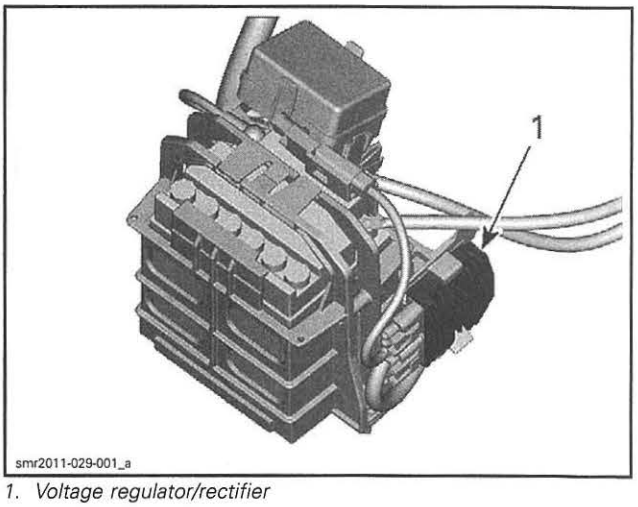

1. Voltage regulator/rectifier

Battery

The battery supplies DC power to the electric starter for cranking the engine. During engine starting, it also supplies DC power to every electrical and electronic system in the vehicle as well as all accessories.

At low engine RPM operation and high current load conditions, it supplements the magneto output and helps to maintain a steady system voltage.

INSPECTION

CHARGING SYSTEM OUTPUT

First ensure that battery is in good condition prior to performing the following tests.

NOTE: It is good practice to check for fault codes using the B.U.D.S. as a first troubleshooting step. Refer to *DIAGNOSTIC AND FAULT CODES* subsection.

Output Voltage Test Using B.U.D.S.

1. Connect to the latest applicable B.U.D.S. software. Refer to *COMMUNICATION TOOLS AND B.U.D.S.* subsection.
2. Select the **Monitoring** and **ECM** tabs.
3. Start engine.

NOTE: Connect a garden hose to cool exhaust system. Refer to *EXHAUST SYSTEM* subsection.

4. Increase engine RPM as specified in the following table and read voltage in B.U.D.S.

OUTPUT VOLTAGE TEST USING B.U.D.S.	
TEST ENGINE SPEED	VOLTAGE (DC)
5500 RPM	14.5 ± .5 Vdc

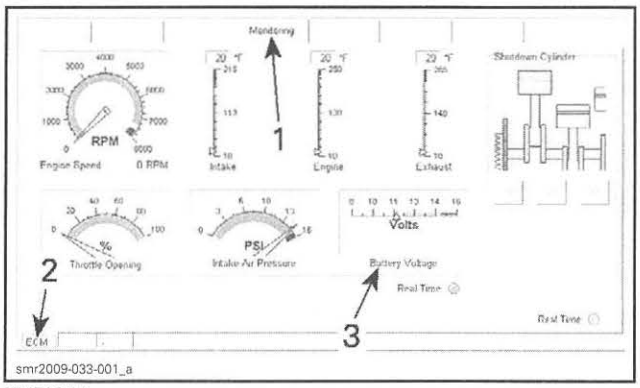

TYPICAL
1. *Monitoring tab*
2. *ECM tab*
3. *Battery voltage*

If voltage is above specification, replace voltage regulator/rectifier.

If voltage is below specification, check stator output and wiring harness prior to concluding that voltage regulator/rectifier is defective. Refer to *PTO HOUSING AND MAGNETO* subsection.

Output Voltage Test Using a Multimeter

For battery access, refer to *BATTERY ACCESS* in this subsection.

1. Set multimeter to Vdc.
2. Connect multimeter to battery posts.

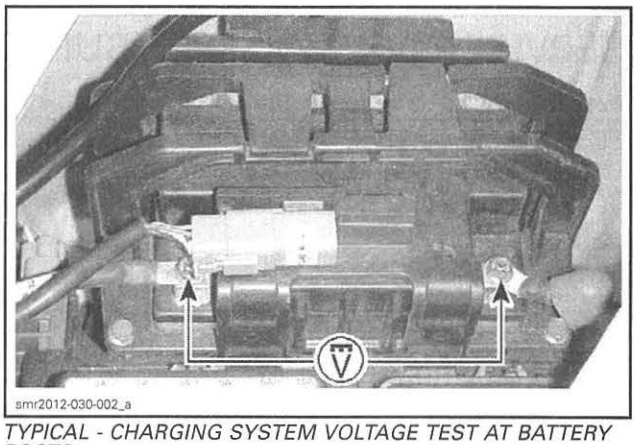

TYPICAL - CHARGING SYSTEM VOLTAGE TEST AT BATTERY POSTS

3. Start engine.

NOTE: Connect a garden hose to cool exhaust system. Refer to *EXHAUST SYSTEM* subsection.

4. Increase engine RPM as specified in the following table and read voltage with the multimeter.

OUTPUT VOLTAGE TEST USING A MULTIMETER	
TEST ENGINE SPEED	VOLTAGE (DC)
5500 RPM	14.5 ± .5 Vdc

If voltage is above specification, replace voltage regulator/rectifier.

If voltage is below specification, check stator output and wiring harness prior to concluding that voltage regulator/rectifier is defective. Refer to *PTO HOUSING AND MAGNETO* subsection.

Output Current Test with an Inductive Ammeter

For fuse box access, refer to the appropriate *BATTERY ACCESS* in this subsection.

1. Detach fuse box from the electrical component support.

Use an inductive ammeter such as the EXTECH INDUCTIVE AMMETER (P/N 380941) or equivalent.

2. Turn on the ammeter and select 40 Adc.
3. From underneath the fuse box, clamp the ammeter around the DC output wire.

DC OUTPUT WIRE IN FUSE BOX
Terminal A3 (RED/BLACK wire)

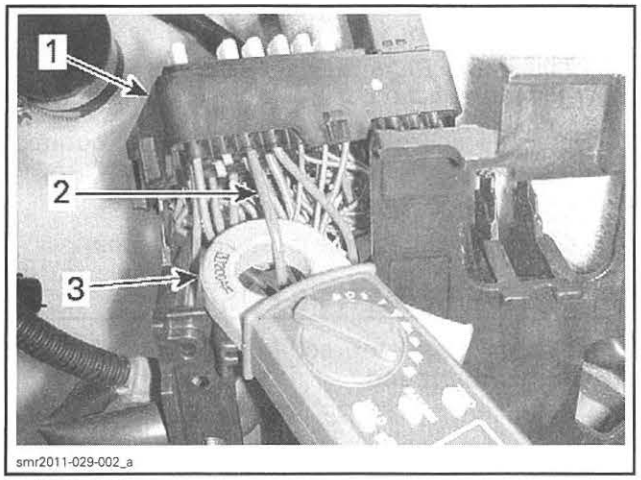

smr2011-029-002_a

1. Fuse box
2. DC output wire
3. Ammeter clamp

NOTE: Zero set the ammeter before use or reading may be erroneous.

4. Start engine.

NOTE: Connect a garden hose to cool exhaust system. Refer to *EXHAUST SYSTEM* subsection.

5. Increase engine RPM as specified in the following table and read current with the ammeter.

TEST ENGINE SPEED	CURRENT
5500 RPM	Approx. 10 A (while suspension does not move)

NOTE: Initial current reading will be higher than specified due to the battery drain from the engine start. This is an indication that the charging system is operating normally. Current load will come down as the battery recovers its charge.

If current reading is far below specification, test stator output and wiring harness prior to concluding the voltage regulator/rectifier is faulty.

NOTE: If the battery is in poor condition or is not at a full state of charge, current reading will be above specification. Refer to *BATTERY* in this subsection for battery testing.

6. Tightly secure fuse box to the electrical component support with a NEW locking tie.

⚠ WARNING

Fuse box must be tightly secured with a NEW locking tie.

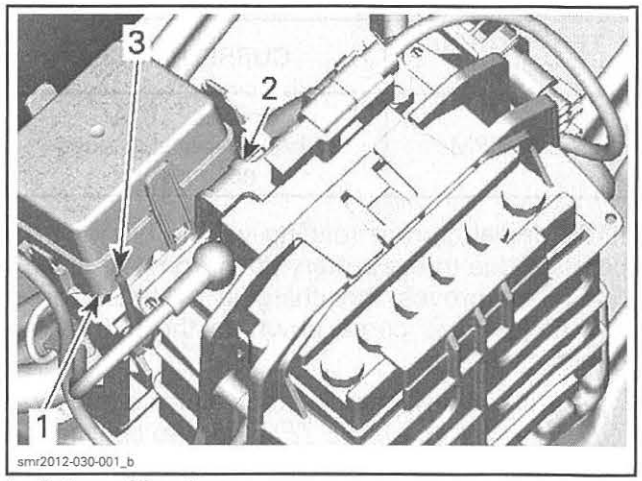

smr2012-030-001_b

1. Bottom of fuse box
2. Electrical component support
3. Locking tie

Output Current Test with a Multimeter

NOTICE **Charging current may rise over multimeter current reading capacity (usually 10 A) possibly causing test equipment damage. It is preferable to use an inductive ammeter to test the charging system current.**

For fuse box access, refer to *BATTERY ACCESS* in this subsection.

1. Remove charging system fuse.
2. Set multimeter to Adc.
3. Connect probes to fuse holder terminals.

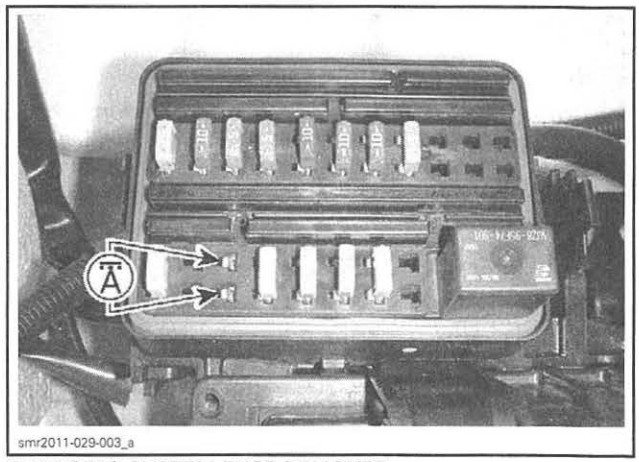
smr2011-029-003_a

CHARGING SYSTEM FUSE REMOVED

4. Start engine.

NOTE: Connect a garden hose to cool exhaust system. Refer to *EXHAUST SYSTEM* subsection.

5. Increase engine RPM as specified in the following table and read current with the multimeter.

OUTPUT CURRENT TEST	
TEST ENGINE SPEED	CURRENT (DC)
5500 RPM	Approx. 10 A (while suspension does not move)

NOTE: Initial current reading will be higher than specified due to the battery drain from the engine start. This proves the charging system works. Current load will come down as the battery recovers its charge.

If current is below specification, carry out a *STATOR OUTPUT VOLTAGE TEST* prior to concluding the voltage regulator/rectifier is faulty.

TROUBLESHOOTING

DISCHARGED OR WEAK BATTERY

1. **Battery posts and/or cable terminal oxidized.**
   - *Clean battery terminals, posts, and coat with dielectric grease.*
2. **Loose or bad connections.**
   - *Check for wiring and connector tightness, frayed or broken wires. Repair or replace cables or connectors.*
3. **Worn or faulty battery (sulfated, fretting, shorted plates or cell, damaged casing, loose post).**
   - *Carry out a BATTERY VOLTAGE TEST (LOAD APPLIED).*
   - *Replace battery.*
4. **Burnt fuse(s) or faulty rectifier.**
   - *First check fuse(s). If in good condition, check voltage regulator/rectifier.*
5. **Faulty stator.**
   - *Test stator and replace as required.*
6. **Parasitic or "Key Off" current loads.**
   - *Isolate, reduce or eliminate such loads.*
   - *Recharge battery as recommended if vehicle is not used for extended periods of time.*

   NOTE: "Key Off" or parasitic loads may be loads due to installed accessories. Parasitic loads may also be due to water infiltration in connectors, or partial short circuits that slowly drain a battery without causing a fuse to burn.

LOW OR NO CHARGING SYSTEM VOLTAGE

1. **Blown F6 fuse.**
   - *Check F6 fuse.*
2. **Defective stator.**
   - *Test stator. Refer to PTO HOUSING AND MAGNETO subsection.*
3. **Defective charging system wiring or connections.**
   - *Check for damaged wiring.*
   - *Check for damaged or loose connections.*

REPETITIVE BLOWN F6 FUSE

1. **Voltage regulator/rectifier internal circuit shorted to ground.**
   - *Refer to VOLTAGE REGULATOR/RECTIFIER TEST FOR BLOWN F6 FUSE in this subsection.*

FREQUENT LOW ELECTROLYTE LEVEL REQUIRING ADDITION OF DISTILLED WATER

1. **High charging system voltage.**
   - *Carry out a CHARGING SYSTEM VOLTAGE TEST.*
2. **Old battery with reduced current storage capacity.**
   - *Carry out a BATTERY VOLTAGE TEST (LOAD APPLIED).*
   - *Replace battery.*
3. **Cracked, leaking or improperly sealed battery.**
   - *Ensure battery cell caps are properly installed and not leaking.*
   - *If battery is cracked or leaking electrolyte, replace battery and clean surrounding area as recommended in BATTERY further in this subsection.*

PROCEDURES

VOLTAGE REGULATOR/RECTIFIER

Voltage Regulator Continuity Test

Due to internal circuitry, there is no static test available to check continuity.

Voltage Regulator/Rectifier Access (GTS, GTI, GTR, Wake and RXP Series)

Open the front storage cover an remove the access panel.

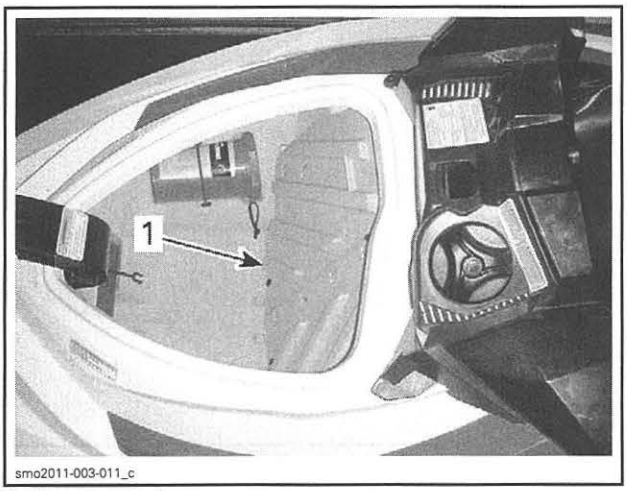

1. Access panel

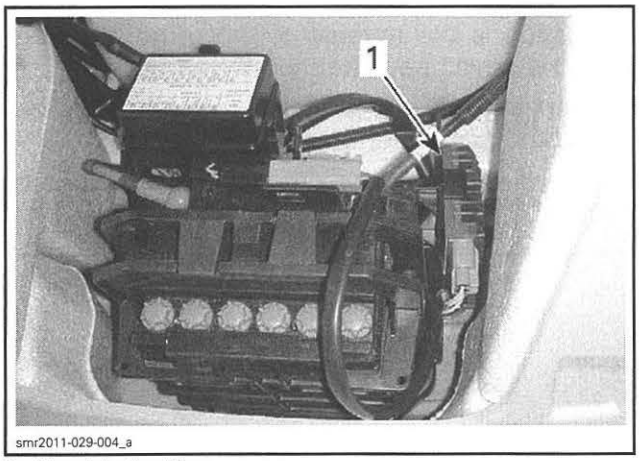

1. Regulator/rectifier

Voltage Regulator/Rectifier Access (RXT, GTX and Wake Pro Series)

Models with Suspension

1. Open the boarding platform.

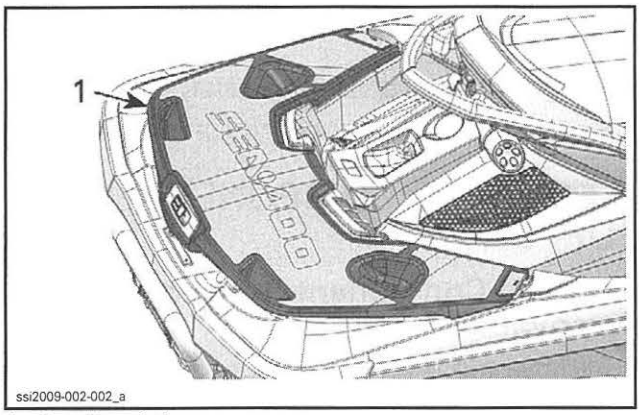

1. Boarding platform

2. Remove the RH side storage bin.

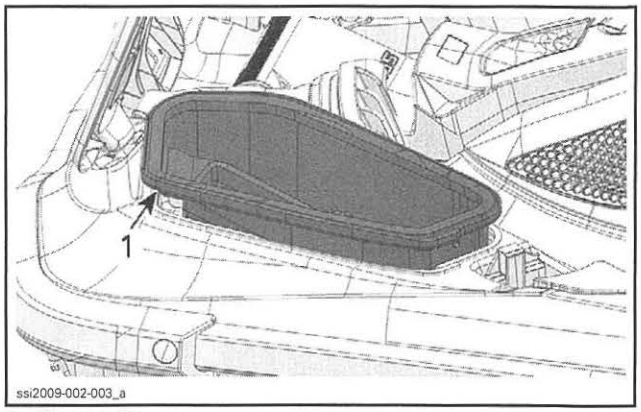

1. Storage bin

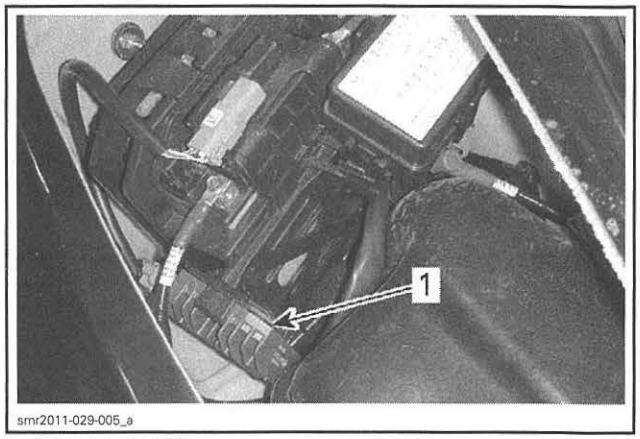

1. Regulator/rectifier

Models Without Suspension

Remove the RH side access panel on the rear deck.

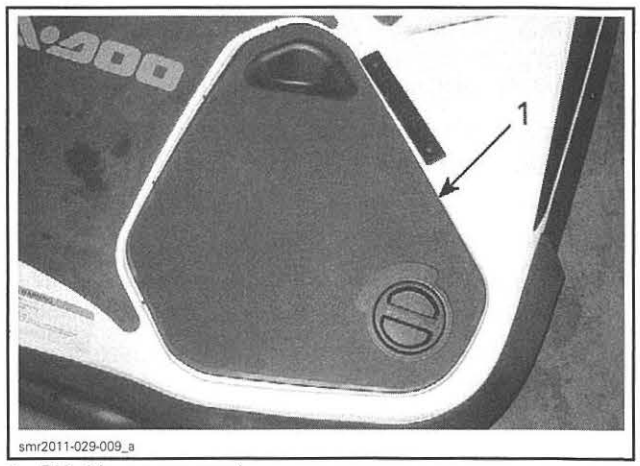

1. RH side access panel

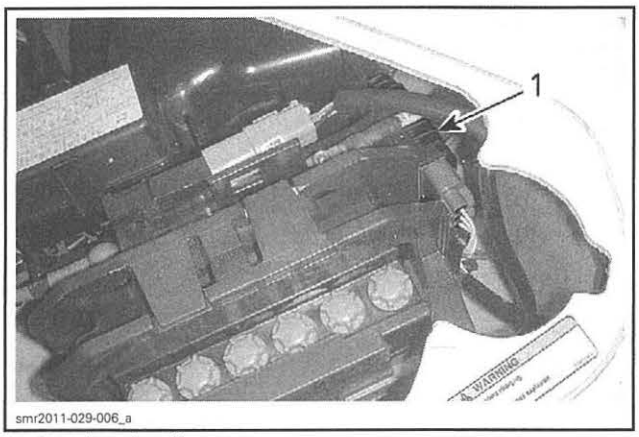

1. Regulator/rectifier

Voltage Regulator/Rectifier Test for Blown F6 Fuse

1. Detach the voltage regulator/rectifier from the electrical component support. Refer to *VOLTAGE REGULATOR/RECTIFIER REMOVAL* in this subsection.
2. Disconnect the voltage regulator/rectifier 2-wire connector.
3. Install a new fuse.

If the fuse still burns, check for a shorted wire or connector pin.

If fuse does not burn, replace regulator/rectifier.

Voltage Regulator/Rectifier Replacement

Voltage Regulator/Rectifier Removal

1. Detach electrical component support from battery holder. Refer to *ELECTRICAL COMPONENT SUPPORT* in this subsection.
2. Disconnect both connectors from the voltage regulator/rectifier.
3. Detach the voltage regulator/rectifier from the electrical component support:
   - 3.1 Push the lower tab down to release the bottom of voltage regulator/rectifier.
   - 3.2 Pull the bottom of voltage regulator/rectifier off the electrical component support.

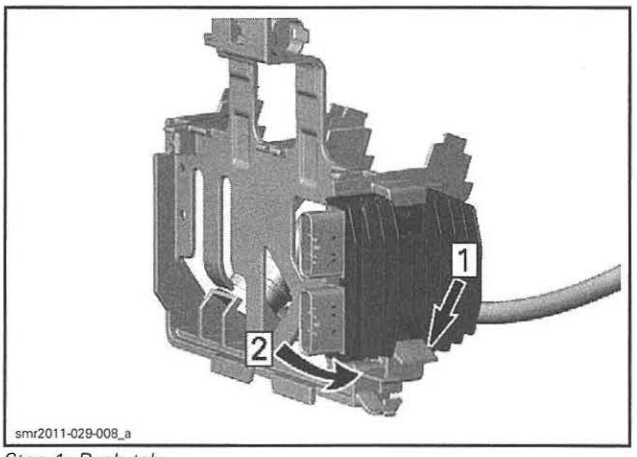

Step 1: Push tab
Step 2: Pull off

Voltage Regulator/Rectifier Installation

Installation is the reverse of the removal procedure. However, pay attention to the following.

1. Insert the top of voltage regulator/rectifier behind the component support upper tab.
2. Push the bottom of voltage regulator/rectifier to lock it.

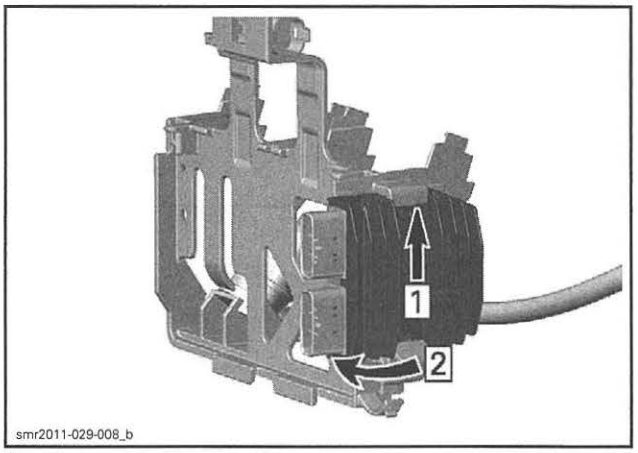

Step 1: Insert behind the tab
Step 2: Push to lock

3. Wiggle it to make sure it is safely locked.
4. Reinstall remaining removed components.

ELECTRICAL COMPONENT SUPPORT

Electrical Component Support Removal

1. Remove top screws from support.

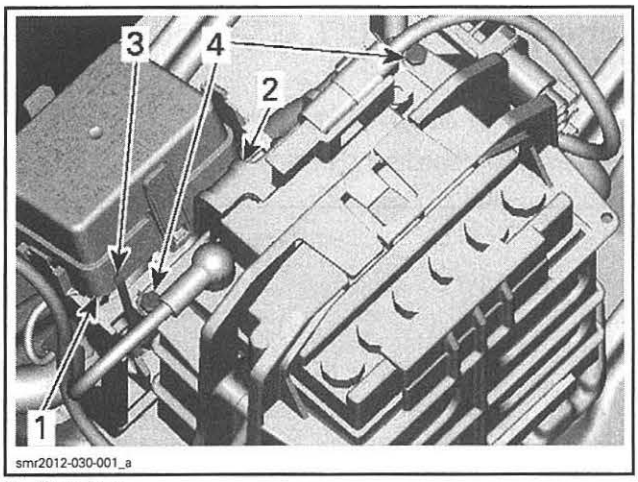

1. *Fuse box*
2. *Electrical component support*
3. *Locking tie*
4. *Screws*

2. Unhook the top of electrical component support from battery holder.
3. Pull up electrical component support.

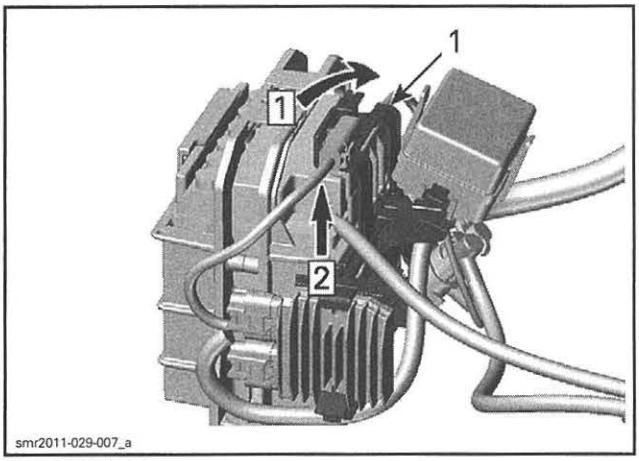

Step 1: Unhook
Step 2: Pull up

1. *Electrical component support*

Electrical Component Support Installation

Installation is the reverse of removal procedures. However, pay attention to the following.

1. Attach the electrical component support to the battery holder:
   - 1.1 Engage the support lower tabs in the battery holder bottom openings.
   - 1.2 Push the top of support towards the battery holder until it clips.

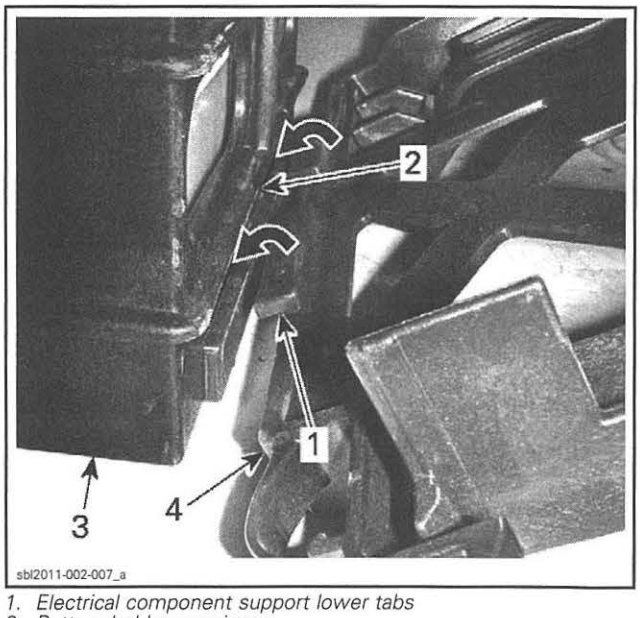

1. *Electrical component support lower tabs*
2. *Battery holder openings*
3. *Battery holder*
4. *Electrical components support*

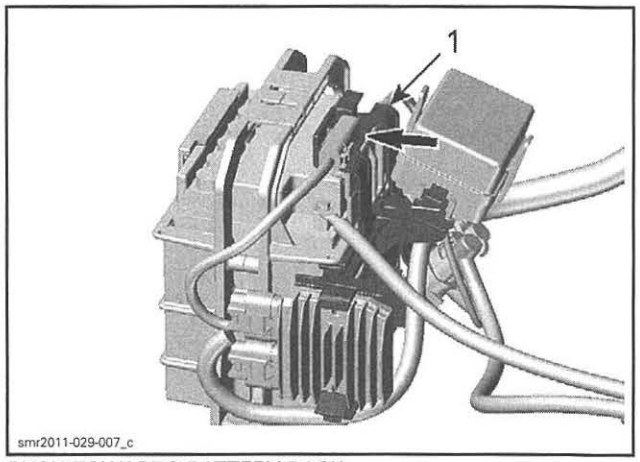

PUSH TOWARDS BATTERY RACK

1. *Electrical component support*

2. Install top screws to the electrical component support.

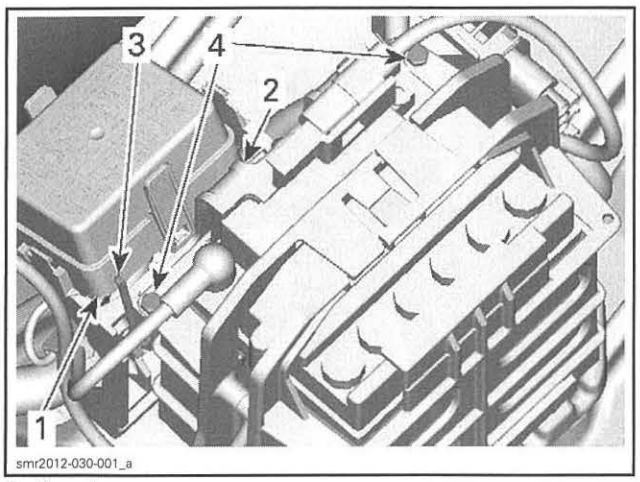

1. *Fuse box*
2. *Electrical component support*
3. *Locking tie*
4. *Screws*

3. Tightly secure the fuse box to the electrical component support with a NEW locking tie.

⚠ WARNING

Fuse box must be tightly secured with a NEW locking tie.

4. Wiggle the assembly to make sure it is properly secured.

BATTERY

Battery Access (GTS, GTI, GTR, Wake and RXP Series)

Open the front storage cover an remove the access panel.

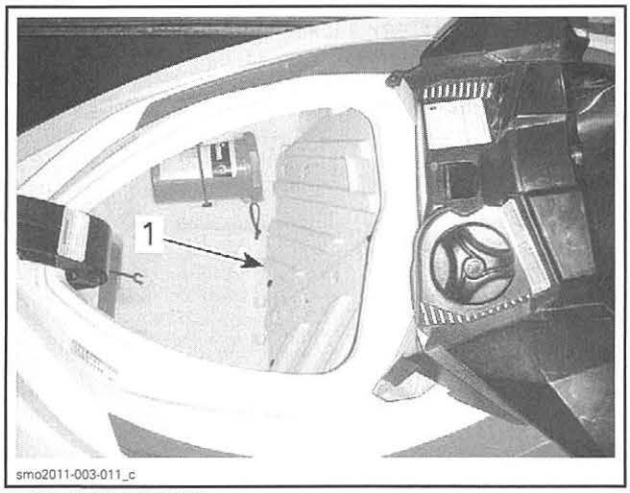

FUSE BOX ACCESS
1. *Access panel*

Battery Access (RXT, GTX and Wake Pro Series)

Models with Suspension

1. Open the boarding platform.

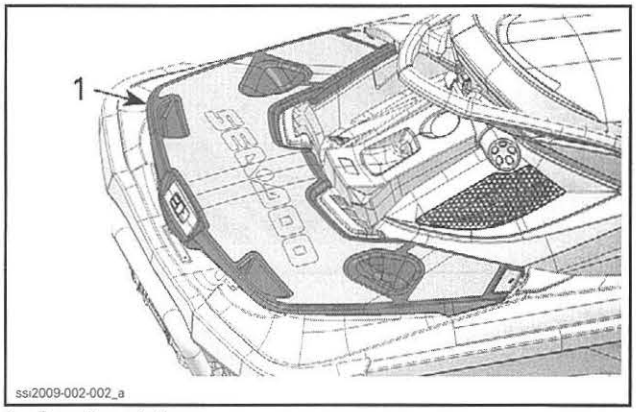

1. *Boarding platform*

2. Remove the RH side storage bin.

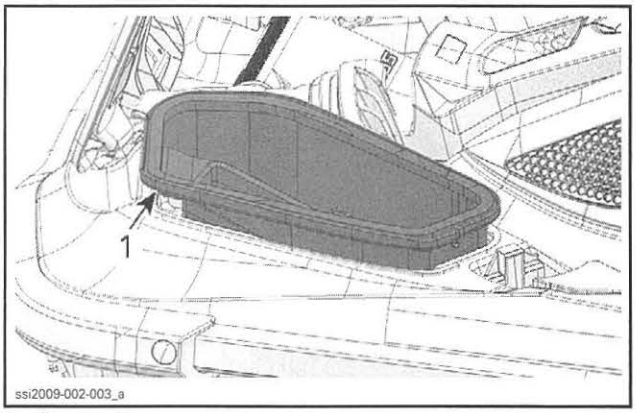

1. *Storage bin*

Models Without Suspension

3. Remove the RH side access panel on the rear deck.

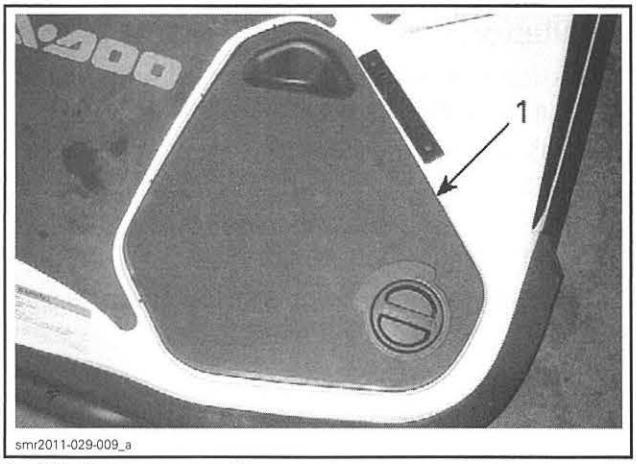

1. *RH side access panel*

Battery Removal

⚠ WARNING

The BLACK negative battery cable must always be disconnected first and reconnected last. Never charge or boost battery while installed in watercraft.

1. Remove the diagnostic connector from its holder.

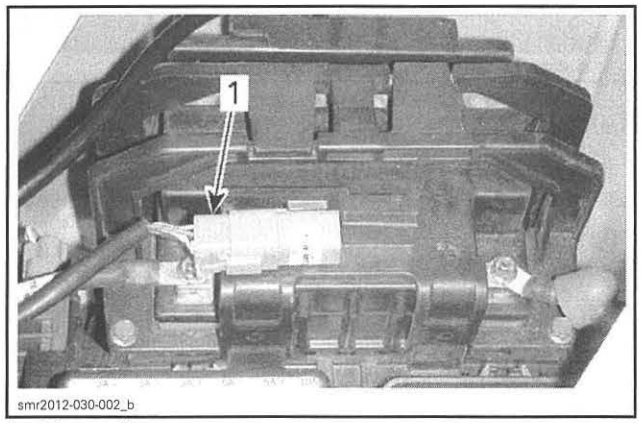

1. Diagnostic connector

2. Disconnect the BLACK (-) battery cable.

⚠ WARNING

Always disconnect battery cables exactly in the specified order, BLACK (-) battery cable first then the RED (+) cable last.

3. Disconnect the RED (+) cable.

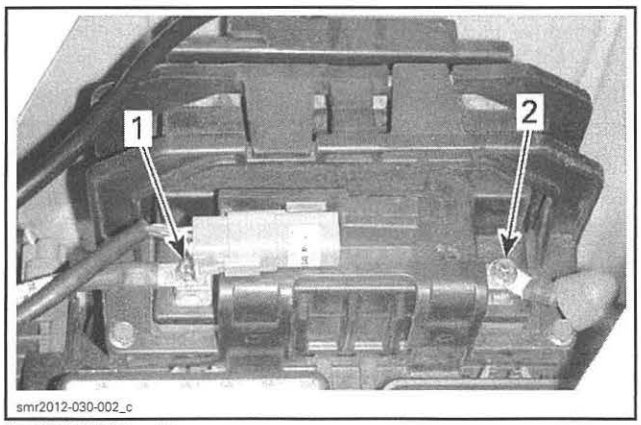

1. BLACK (-) cable
2. RED (+) cable

4. Detach electrical component support from battery holder. Refer to *ELECTRICAL COMPONENT SUPPORT* in this subsection.
5. Remove and discard both screws securing battery holder to its base.

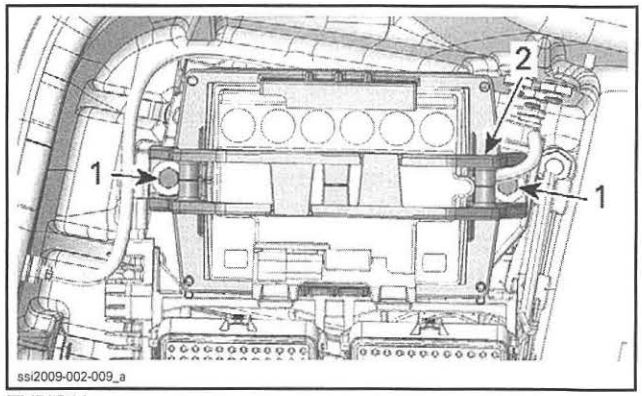

TYPICAL
1. Retaining screws
2. Battery holder

6. Disconnect vent hose from the battery.

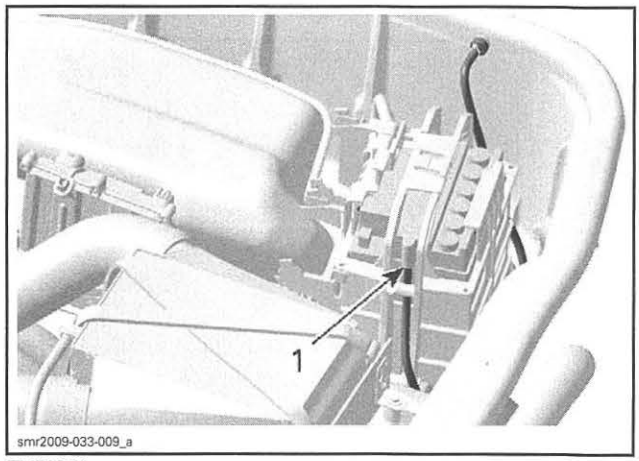

TYPICAL
1. Disconnect here

7. Remove battery with battery holder from vehicle.

⚠ CAUTION **Be careful not to disconnect the hose from the battery vent and cause an electrolyte spill in the watercraft.**

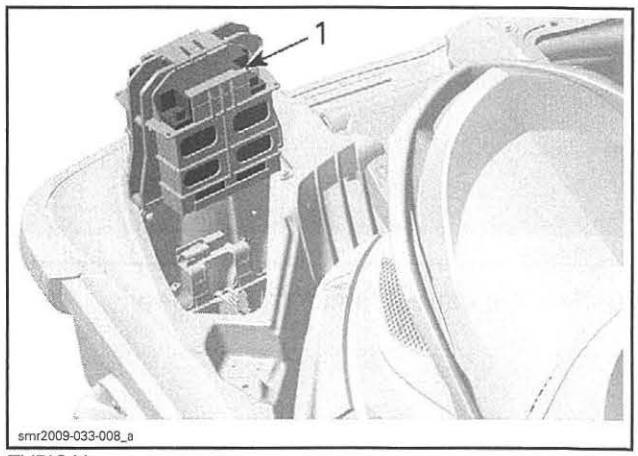

TYPICAL
1. Vent plugged for removal

⚠ WARNING

Electrolyte is poisonous and corrosive. Avoid contact with eyes, skin and clothing. Wear a suitable pair of non-absorbent gloves when removing the battery by hand. Rinse any affected area with clear running water for at least 15 minutes, then seek professional medical attention.

NOTICE Should any electrolyte spillage occur, immediately wash off area with a solution of baking soda and water, then rinse thoroughly.

8. Unlock the upper tabs then slightly open battery holder.

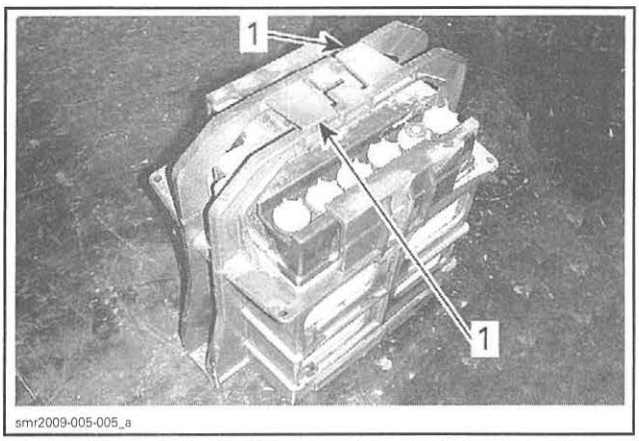

smr2009-005-005_a

1. Unlock here

9. Separate lower tabs to unlock them.

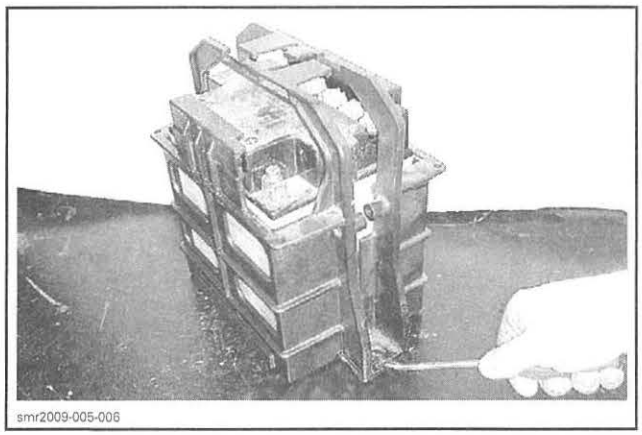
smr2009-005-006

10. Remove battery holder from battery.

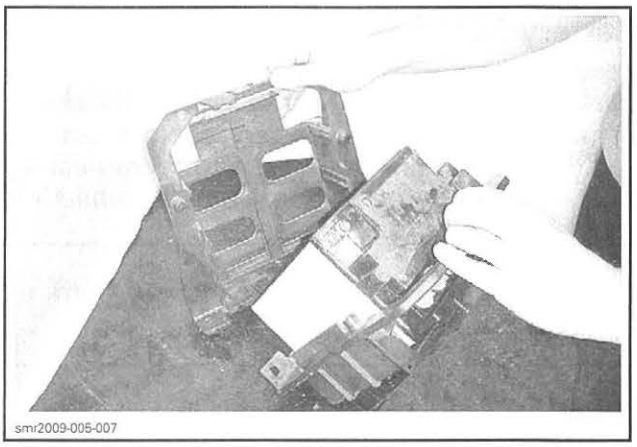
smr2009-005-007

Battery Cleaning

Clean the battery casing, caps, cables and battery posts using a solution of baking soda and water.

NOTICE Do not allow cleaning solution to enter battery.

Remove corrosion from battery cable terminals and battery posts using a firm wire brush. Rinse with clear water then dry well.

Battery Inspection

Visually inspect battery casing for cracks or other possible damages. If casing is damaged or shows signs of acid leaking, replace battery and thoroughly clean battery holder, holder base and surrounding area with a solution of water and baking soda.

Inspect battery posts for corrosion and security of mounting.

Inspect for cracked or damaged battery caps, replace defective caps.

NOTE: Hand tighten caps then tighten an additional 1/4 turn using a 20 mm (3/4 in) socket. Using any other tool could damage the plastic battery caps.

⚠ WARNING

Battery electrolyte is caustic. To prevent spillage, ensure battery cell caps are sufficiently tight to properly seal each cell.

Battery Electrolyte Level

Check electrolyte level in each cell, add distilled water up to the upper fill level line.

NOTICE Add only distilled water in an activated battery.

Battery Testing

There are 3 types of battery tests.

TEST METHOD	COMMENT
Voltage test (load applied)	A dynamic voltage test with a load applied gives an accurate indication of the condition of the battery. **This is the most recommended method.**
Voltage test (no load)	A static voltage test is carried out without discharging current. It is the simplest and most commonly used but the most likely to give false results.
Battery electrolyte reading	Gives an accurate indication of the charge condition of each cell.

Battery Voltage Test (Load Applied)

Use a load testing device such as the ELECTRO SPECIALTIES BATTERY LOAD TESTER (P/N 710). It has a 500 A carbon pile adjustable load.

Follow battery load tester instructions.

Apply a load of 3 times the ampere-hour rating of the battery for 14 seconds, then check battery voltage.

BATTERY VOLTAGE TEST (LOAD APPLIED)	
TIME TO MEASURE INTO TEST	VOLTAGE (WITH LOAD APPLIED)
14 seconds	10.5 Vdc min.

If battery voltage has dropped below specification, the battery storage capacity has decreased appreciably and the battery should be replaced.

Battery Voltage Test (No Load)

NOTE: Be aware that the voltage test can indicate that the battery is in good condition even though the battery does not have enough stored energy to crank the engine. A load test gives a more accurate indication of the condition of the battery.

If the battery has just received a charge, wait 1-2 hours before taking a voltage reading.

Set multimeter to Vdc and measure voltage at battery terminals.

FULLY CHARGED BATTERY VOLTAGE (NO LOAD)
12.6 Vdc minimum

Battery Electrolyte Reading

NOTE: Do not top up cell electrolyte level with distilled water prior to taking an electrolyte reading.

Check charge condition of each cell using a hydrometer.

NOTE: A hydrometer measures the charge of a battery in terms of specific gravity of the electrolyte.

BATTERY ELECTROLYTE SPECIFICATION	
BATTERY CONDITION	SPECIFIC GRAVITY
Fully charged	1.265 - 1.280

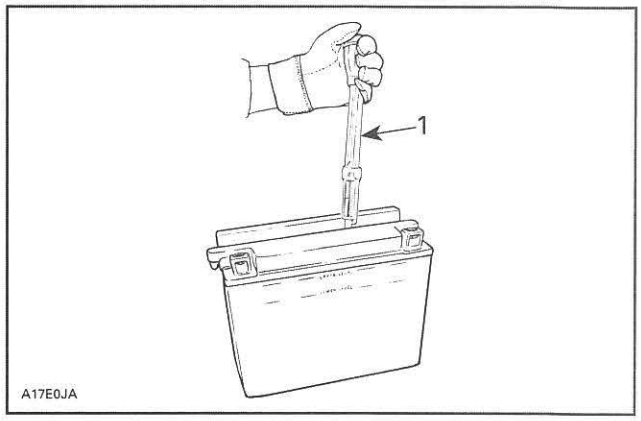

1. Hydrometer

Most hydrometers give a true reading at 21°C (70°F).

In order to obtain the correct value, adjust the initial reading by adding or subtracting the number indicated in the following table.

ELECTROLYTE TEMPERATURE CORRECTION CHART			
ELECTROLYTE TEMPERATURE		OPERATION TO PERFORM	
°C	°F		
38	100	Add to the reading:	.012
32	90		.008
27	80		.004
21	70	CORRECT READING	
16	60	Subtract from the reading:	.004
10	50		.008
4	40		.012
- 1	30		.016

STATE OF CHARGE AS PER HYDROMETER READING (TEMPERATURE CORRECTED)		
STATE OF CHARGE	SPECIFIC GRAVITY	
	@ 27°C (80°F)	@ 4°C (40°F)
100%	1.26 - 1.27	1.27 - 1.28
75%	1.21 - 1.22	1.22 - 1.23
50%	1.16 - 1.17	1.17 - 1.18
25%	1.12 - 1.13	1.13 - 1.14
0%	1.10 or less	1.11 or less

Battery Storage

Disconnect and remove battery from watercraft as explained in *BATTERY REMOVAL*.

NOTICE Battery storage is critical for battery life. Regularly charging the battery during storage will prevent cell sulfation. Keeping the battery in vehicle for storage may lead to contacts degradation/corrosion and case damage if freezing occurs. A discharged battery will freeze and crack in areas where freezing conditions are experienced. Electrolyte leakage will damage surrounding parts. Always remove battery from vehicle for storage and regularly recharge it to keep an optimal condition.

Check electrolyte level in each cell.

Add distilled water up to upper level line as necessary.

NOTICE Do not overfill.

The battery must always be stored fully charged. If required, recharge until the recommended specific gravity is obtained prior to storage.

NOTICE Battery electrolyte temperature must not exceed 50°C (122°F) during charging. The battery casing should not feel hot to the touch.

Clean battery terminals and cable connections using a wire brush.

Apply a light coat of dielectric grease on terminals.

Clean battery casing and caps using a solution of baking soda and water.

NOTICE Do not allow cleaning solution to enter battery.

Rinse battery with clear water and dry well using a clean cloth.

Store battery in a cool dry place. Such conditions reduce self-discharging and keep fluid evaporation to a minimum. Keep battery away from dew, high moisture and direct sunlight.

During the storage period, recheck electrolyte level and specific gravity readings at least every month. If necessary, top up the electrolyte level with distilled water, then recharge (trickle charge). Recharge frequency depends on battery condition and storage temperature. Maintain battery as per following table.

AMBIENT TEMPERATURE	CHARGING FREQUENCY
Below 16°C (60°F)	Every month
Above 16°C (60°F)	Every 2 weeks

⚠ WARNING

Batteries must always be stored out of reach of children.

Activation of a New Battery

⚠ WARNING

Never charge or boost battery while installed in watercraft.

Perform the following operations whenever a new battery is to be installed.

– Remove the sealing tube from the vent fitting.

⚠ WARNING

Failure to remove the sealing tube could result in an explosion.

1. Remove caps and fill battery to UPPER LEVEL line with electrolyte (specific gravity: 1.265 at 21°C (70°F)).

NOTE: This battery may fill slower than others due to the anti-spill check ball design.

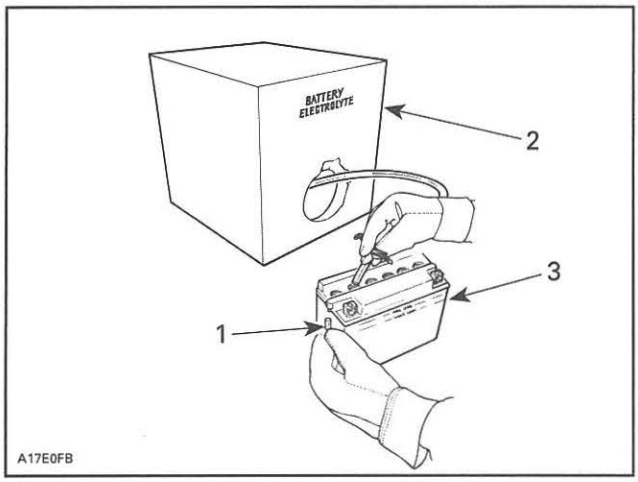

1. Sealing tube removed
2. Battery electrolyte
3. Upper level line

NOTE: Place the cell caps over the cell openings **engaging only the first thread** to prevent cell contamination and acid splatter during charging. **Do not screw caps on tightly.**

2. Allow the battery to stand for 30 minutes MINIMUM to allow the electrolyte time to soak through the battery cells plates.

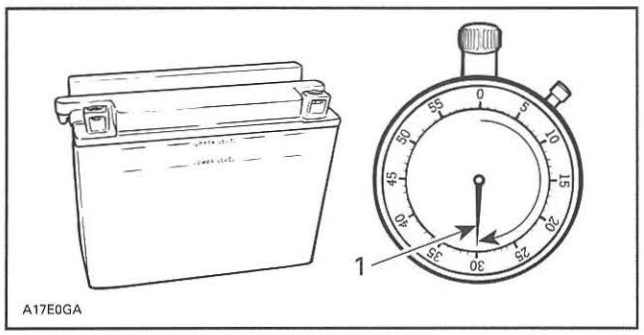

1. 30 minutes

3. Readjust the electrolyte level to the UPPER LEVEL line.

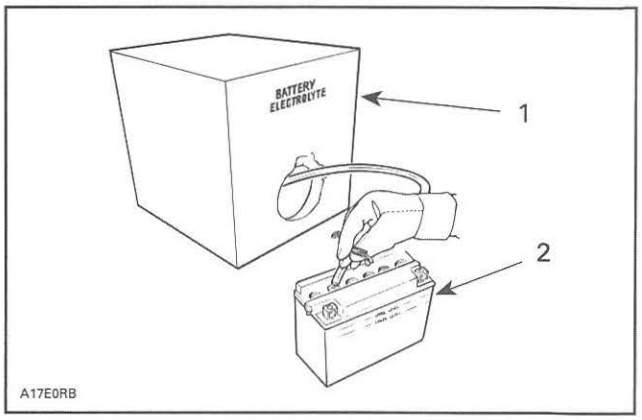

1. Battery electrolyte
2. Upper level line

4. Connect a 2 A battery charger for 3 to 5 hours.

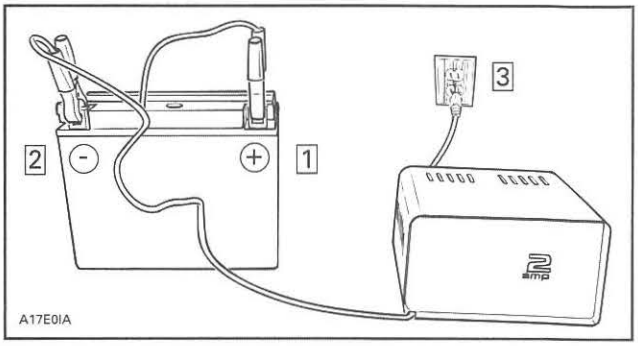

Step 1: Connect + lead to battery + post
Step 2: Connect - lead to battery - post
Step 3: Connect battery charger to AC outlet

⚠ WARNING

Gases given off by a battery being charged are highly explosive. Always charge in a well ventilated area. Keep battery away from cigarettes, open flames, welding operations and any other types of ignition. Always turn battery charger off prior to disconnecting cables. Otherwise, a spark will occur possibly causing the battery to explode.

NOTICE If charging rate increases above 2.4 A reduce it immediately. If cell temperature rises above 50°C (122°F) or if the casing feels hot, discontinue charging temporarily or reduce the charging rate.

5. Disconnect battery charger.

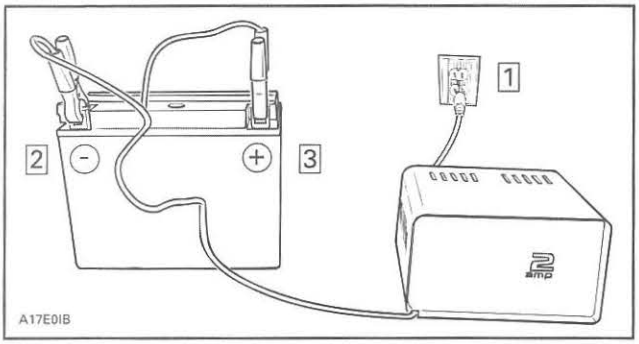

Step 1: Disconnect battery charger from AC outlet
Step 2: Disconnect - lead
Step 3: Disconnect + lead

6. Test battery state of charge. Use a hydrometer.

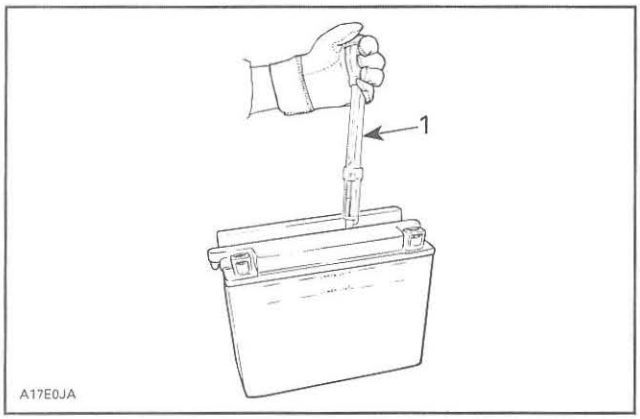

1. Hydrometer

7. If electrolyte level has dropped after charging, fill with distilled water to UPPER LEVEL line. After water is added, continue charging for 1 to 2 hours to mix water with electrolyte.
8. Reinstall caps and clean any electrolyte spillage using a solution of baking soda and water.

NOTE: Hand tighten caps then tighten an additional 1/4 turn using a 20 mm (3/4 in) socket. Using an other tool could damage the plastic battery caps.

⚠ WARNING

Battery electrolyte is caustic. To prevent spillage, battery cell cap should be sufficiently tight to properly seal.

Charging a Used Battery

⚠ WARNING

Never charge battery while installed in watercraft.

For best results, battery should be charged when it is at room temperature. A battery that is cold may not accept current for several hours after charging has begun.

Do not charge a frozen battery. If the battery charge is very low, the battery may freeze. If you suspect the battery to be frozen, move it to a heated area for about 2 hours (or more if required) to let it thaw out before charging.

⚠ WARNING

Always charge a battery in a well ventilated area.

The time required to charge a battery will vary depending on several factors, such as:

- Battery temperature: The charging time is increased for a cold battery as charging current accepted by a cold battery will be lower than for a warm battery. As the battery warms up, it will accept a higher rate of charge.
- State of charge: As a battery discharges, it gives up its stored energy. The greater the discharge, the longer it will take to fully recharge it.
- Type of charger: Battery chargers vary in the amount of voltage and current that they can supply.

Charging a Very Flat or Completely Discharged Battery

The battery charger used should have an adjustable charging rate. A unit which can be adjusted in small increments is acceptable.

The battery charger must be equipped with an ammeter capable of accurately measuring current of less than 1 ampere.

Unless this procedure is properly followed, a good battery may be needlessly replaced.

1. Measure the voltage at the battery posts with an accurate voltmeter. If it is below 10 volts, the battery will accept current at very low rate. It could be some time before the charging rate increases. Such low current flow may not be detectable on some charger ammeters and the battery will not seem to accept the charge.
2. Exceptionally for this particular case, set the charger to a high rate.

NOTE: Some chargers have a polarity protection feature which prevents charging unless the charger leads are connected to the correct battery terminals. A completely discharged battery may not have enough voltage to activate this circuitry, even though the leads are connected properly. This will make it appear that the battery will not accept a charge. Follow the charger manufacturer's instruction on how to bypass or override this circuitry so that the charger will turn on and charge a low-voltage battery.

3. Since battery chargers vary in the amount of voltage and current they provide, the time required for the battery to accept a measurable charger current may be up to 10 hours or more.
4. If the charging current is not up to a measurable amount after 10 hours, the battery should be replaced.
5. If the charging current is measurable before the end of the 10 hour period, the battery is good and charging should be completed at a lower rate as specified in *ACTIVATION OF A NEW BATTERY*.
6. It is recommended that any battery recharged using this procedure be tested under load prior to returning it to service.

Battery Installation

1. Install battery in its holder and lock holder.
2. Install the battery in the watercraft using new screws.
3. Tighten battery holder screws to 14 N•m (124 lbf•**in**).
4. Reconnect the watercraft vent hose to the battery vent outlet. Make sure vent hose is not pinched or bent.

⚠ WARNING

Vent hose must be free and open. Avoid skin contact with electrolyte.

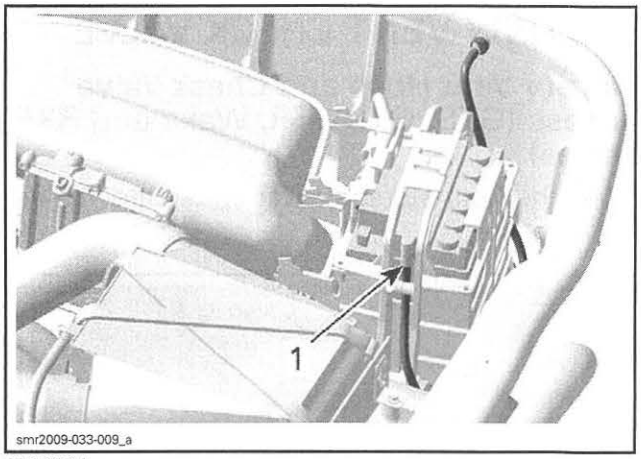

TYPICAL
1. Connect here

5. Install electrical component support to battery holder. Refer to *ELECTRICAL COMPONENT SUPPORT* in this subsection.

⚠ WARNING

Always connect battery cables in the specified order, RED positive cable first, BLACK negative cable last.

6. Connect RED (+) cable.
7. Connect BLACK (-) cable last.

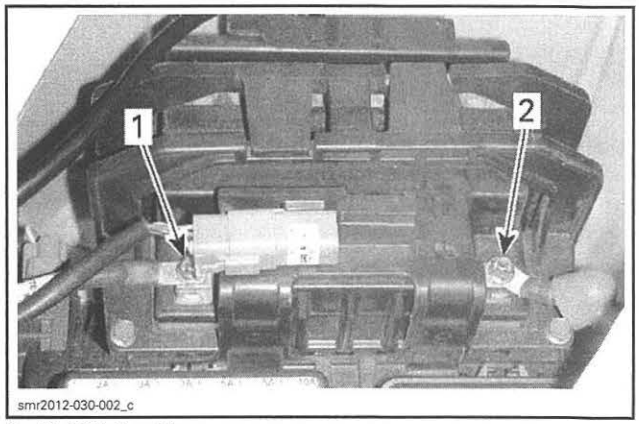

1. BLACK (-) cable
2. RED (+) cable

8. Apply dielectric grease on battery posts.
9. Verify cable routing and attachments.
10. Insert diagnostic connector in its holder.
11. Install remaining removed components.

BATTERY VENT CHECK VALVE

Battery Vent Hose and Check Valve Access (GTS, GTI, GTR, Wake and RXP Series)

Open the front storage cover an remove the access panel.

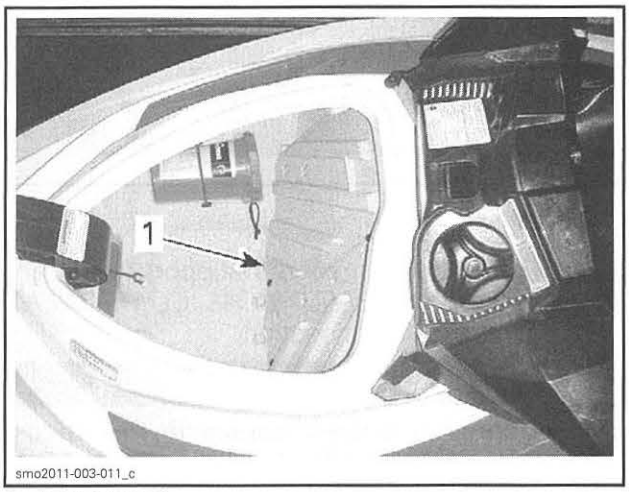

1. Access panel

Reach the check valve on RH side of the hull just in front of the fuel tank vent.

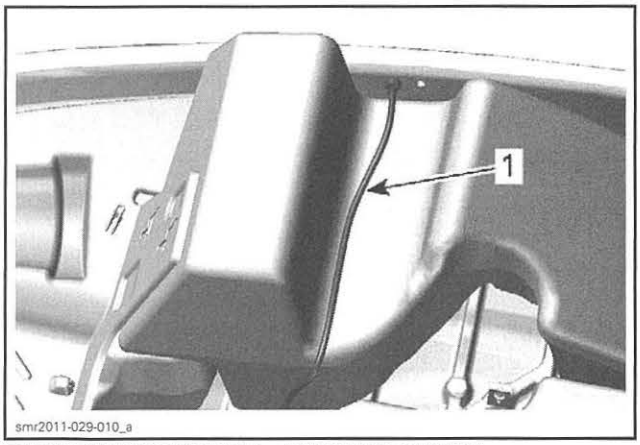

FRONT RH SIDE OF HULL - DECK NOT SHOWN
1. Vent hose

Battery Vent Hose and Check Valve Access (RXT, GTX and Wake Pro Series)

Models with Suspension

1. Open the boarding platform.

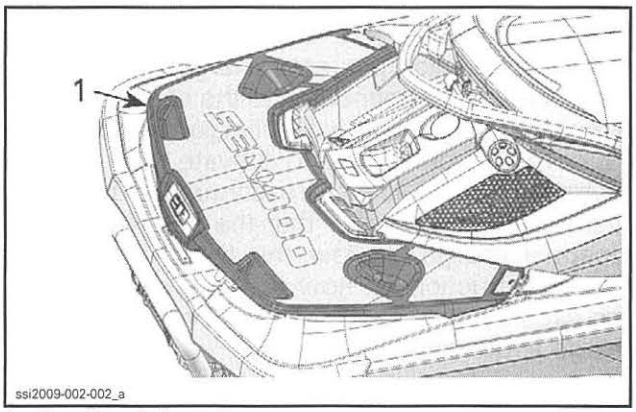

1. Boarding platform

2. Remove the RH side storage bin.

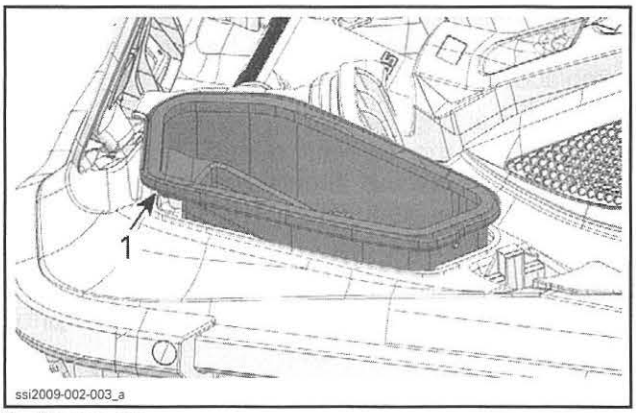

1. Storage bin

Models Without Suspension

Remove the RH side access panel on the rear deck.

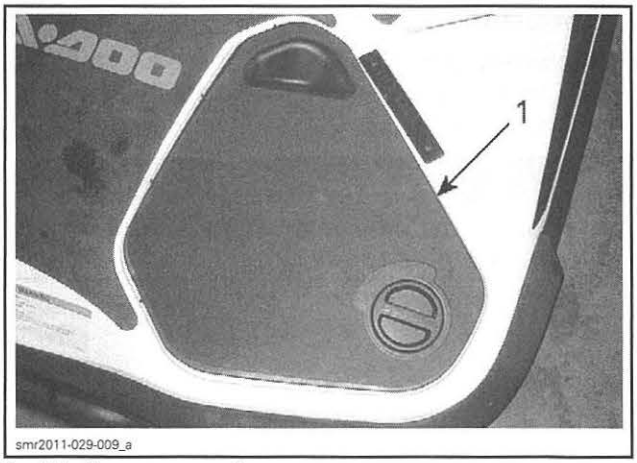

1. RH side access panel

All Models

Reach the check valve on RH side of the hull.

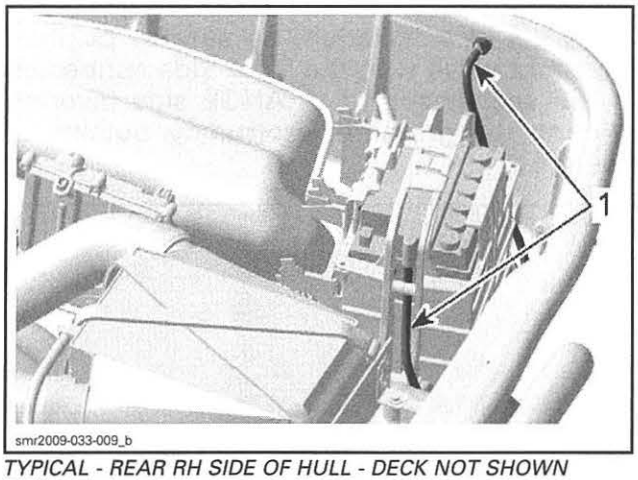

TYPICAL - REAR RH SIDE OF HULL - DECK NOT SHOWN
1. Vent hose

Battery Vent Check Valve Test

⚠ WARNING

Battery caps do not have vent holes. Ensure vent line is not obstructed and check valve is functioning properly.

1. Check vent hose condition.
2. Make sure the check valve and grommet are not plugged.
3. Disconnect vent on LH side of the battery.

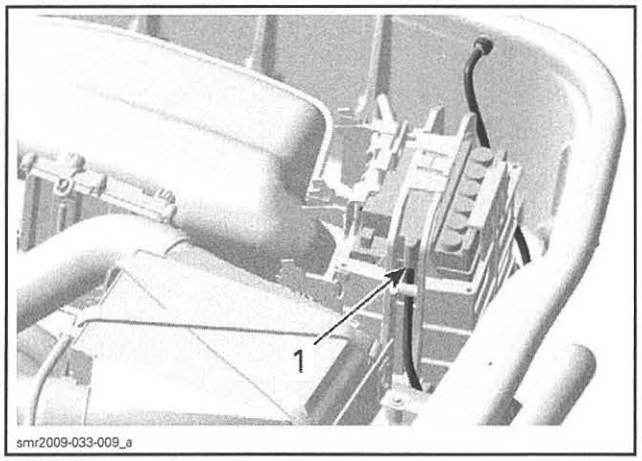

TYPICAL
1. Disconnect here

4. Use the vacuum/pressure pump in the VACUUM/PRESSURE PUMP (P/N 529 021 800).



5. Set vacuum/pressure pump to PRESSURE.

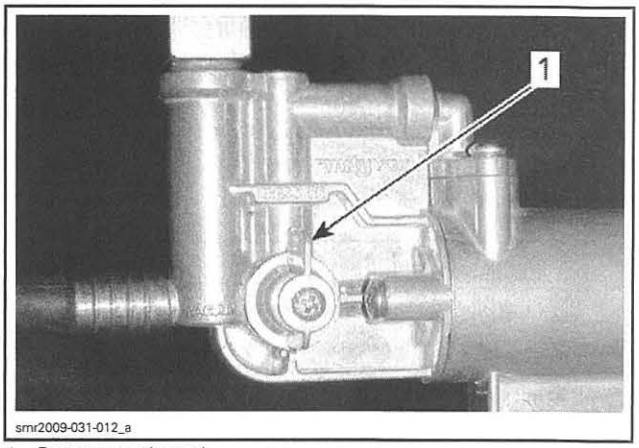

1. Pressure selected

6. Connect vacuum/pressure pump to the vent hose end.
7. Squeeze the vacuum/pressure pump handle several times to push air out through the check valve.

NOTE: The check valve must let air flow out.

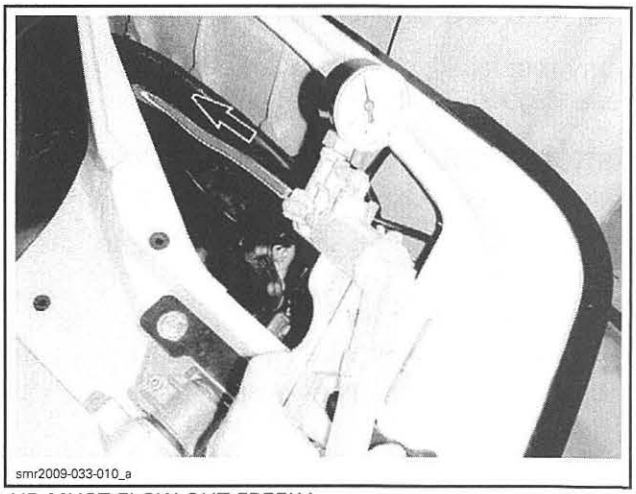

AIR MUST FLOW OUT FREELY

8. Set vacuum/pressure pump to VACUUM.

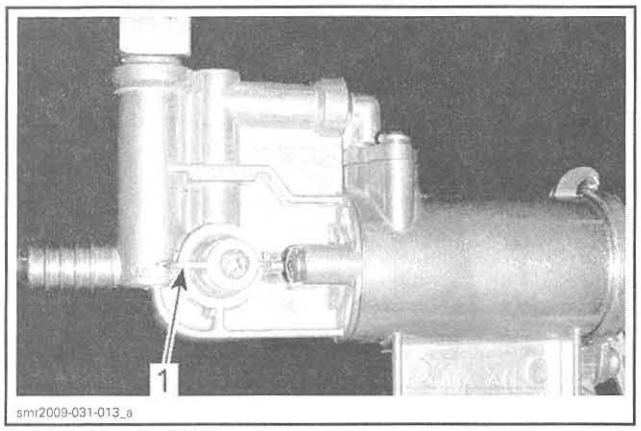

1. Vacuum selected

9. Squeeze the vacuum/pressure pump handle several times to draw air in through the check valve.

NOTE: The check valve must not let air in, and must be able to hold 10 in Hg (-34 kPa) of vacuum without leaking.

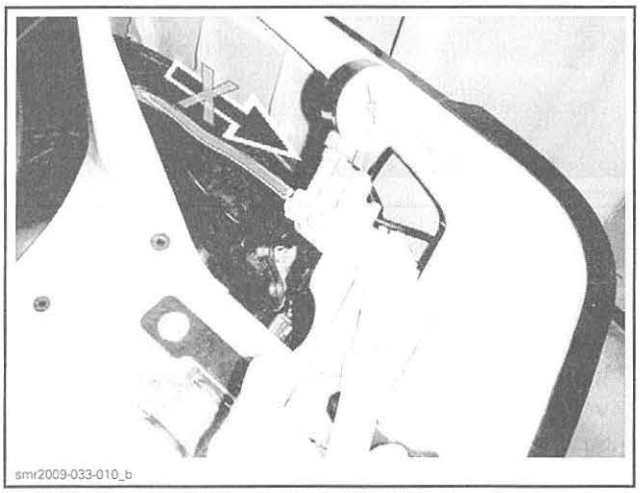

MUST HOLD VACUUM IN THIS POSITION

If any test failed, check the vent hose. If the vent hose is good, replace check valve.

Battery Vent Check Valve Replacement

1. Pull vent check valve out of grommet in hull.
2. Cut locking tie retaining vent hose to check valve.
3. Remove hose from valve.
4. Install a new check valve on vent hose with black end towards vent hose, and secure with a locking tie.
5. Push check valve through grommet in hull.

NOTICE At installation, be sure to position the check valve with the black side connected to the vent line, and ORANGE side inserted through the grommet protruding outside of the hull.

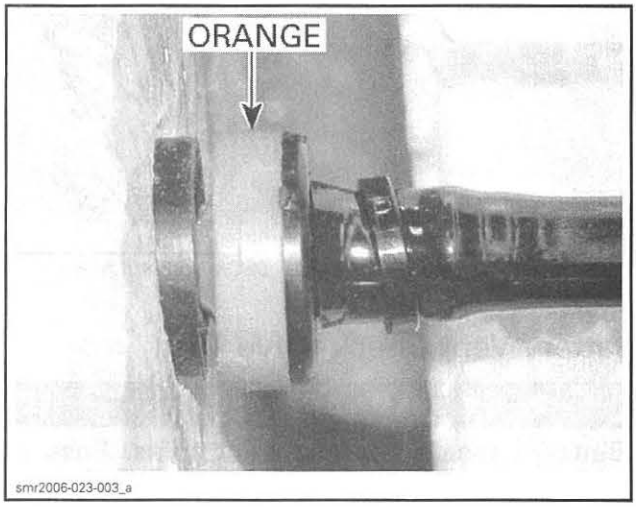

STARTING SYSTEM

SERVICE TOOLS

Description	Part Number	Page
DIAGNOSTIC HARNESS	529 036 188	361
ECM ADAPTER TOOL	529 036 166	360, 364
FLUKE 115 MULTIMETER	529 035 868	360–361, 363–364

SERVICE PRODUCTS

Description	Part Number	Page
DIELECTRIC GREASE	293 550 004	369
ISOFLEX GREASE TOPAS NB 52	293 550 021	368
LOCTITE 243 (BLUE)	293 800 060	368

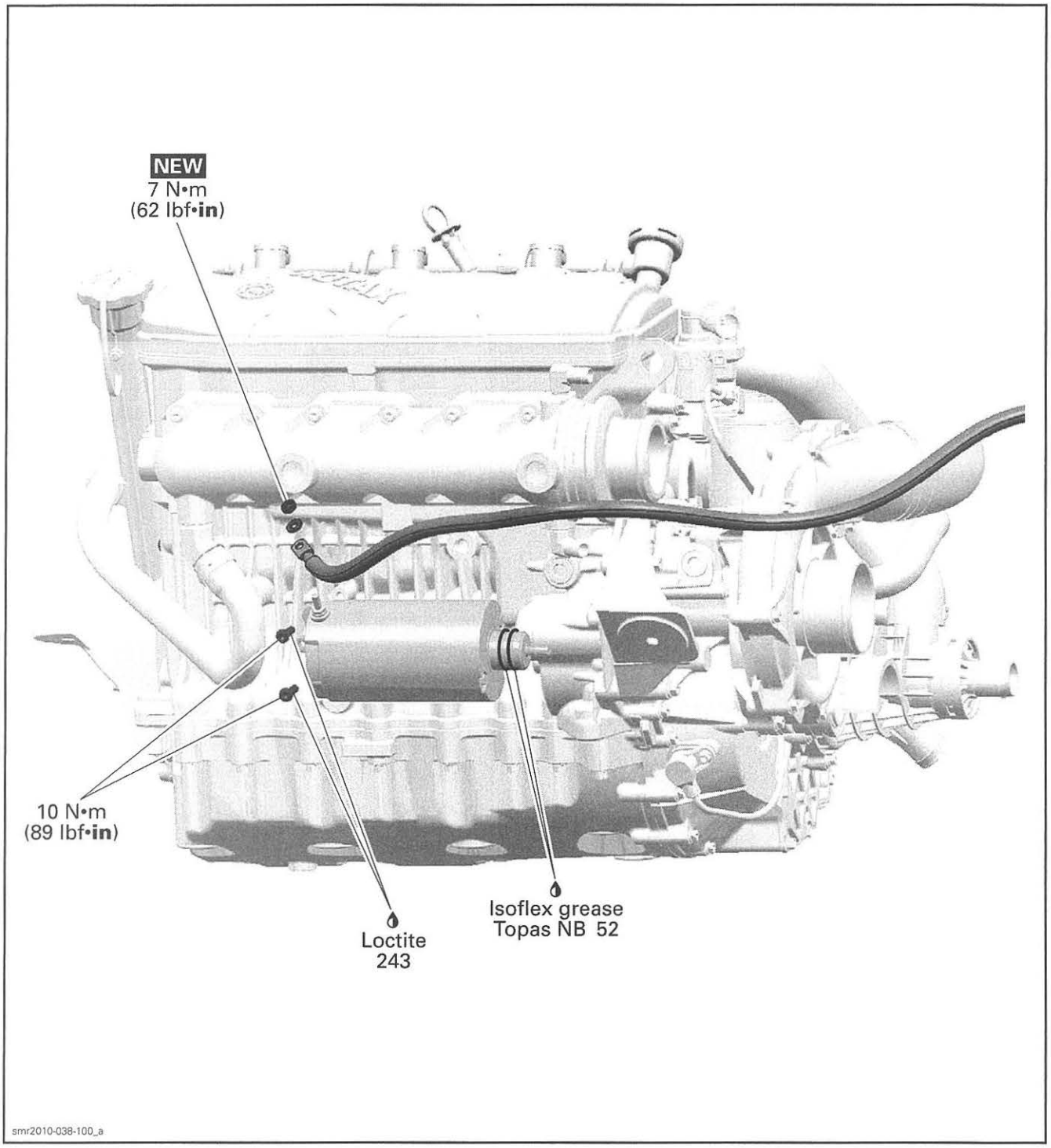
NEW
7 N•m
(62 lbf•in)
10 N•m
(89 lbf•in)
Loctite
243
Isoflex grease
Topas NB 52
smr2010-038-100_a

GENERAL

BASIC STARTING SYSTEM OPERATION

Engine Cranking Conditions

The following conditions must be met to allow engine cranking:

1. START/STOP button pressed and released to activate the ECM.
2. The tether cord securely installed on the engine cut-off switch and the D.E.S.S. key recognized by the ECM as valid (2 short beeps)
3. START/STOP button pressed and held.

Starting System Logic

If the ECM recognizes a valid D.E.S.S. key, it allows engine cranking by providing the ground to the starter solenoid when the START/STOP button is pressed and held.

If the START/STOP button is activated while the throttle lever is depressed more than 60%, the engine will crank but will not start (engine drowned mode).

If the START/STOP button is held after engine has started, the ECM automatically stops the starter if engine speed reaches at least 1400 RPM.

If the START/STOP button is pressed when the engine is running, the engine will shut down.

TROUBLESHOOTING

DIAGNOSTIC TIPS

NOTE: It is a good practice to check for fault codes using B.U.D.S. as a first troubleshooting step. Refer to *DIAGNOSTIC AND FAULT CODES* subsection.

Starting system failures are not necessarily related to the starter but may be due to one the following:

- Starter solenoid fuse F16
- Battery, refer to *CHARGING SYSTEM*
- START/STOP switch
- Starter solenoid
- Engine cut-off switch
- ECM
- Wiring/connections.

Check these components before removing the starter.

NOTE: This subsection assumes the problem is related to an electrical component of the starting system. If the starting system tests good, ensure engine and jet pump integrity. Refer to applicable subsection.

DIAGNOSTIC GUIDELINES

NOTHING HAPPENS WHEN START/STOP BUTTON PRESSED

1. Battery not connected
   - *Connect battery.*
2. Burnt fuse
   - *F3 fuse: (START/STOP switch circuit).*
   - *F8 fuse: (main DC power fuses).*
   - *F19 fuse (ECM power fuse).*
3. Defective relay or related circuits
   - *Test relay and circuits.*
4. Defective START/STOP switch
   - *Test START/STOP switch, wiring and connections.*

ENGINE DOES NOT CRANK

1. D.E.S.S. not functional or wrong D.E.S.S. key
   - *If 2 short beeps are not heard when pressing the START/STOP button, refer to DIGITALLY ENCODED SECURITY SYSTEM subsection.*
2. Burnt fuse
   - *F16 fuse: (starter solenoid power) Carry out a SOLENOID INPUT VOLTAGE TEST (Solenoid Coil).*
3. Discharged battery
   - *Recharge and test. Refer to CHARGING SYSTEM subsection.*
4. Battery connections
   - *Check/clean/tighten.*
5. Poor/bad or corroded ground contacts (engine, battery ground cable, starter etc.)
   - *Check/clean/repair, refer to POWER DISTRIBUTION AND GROUNDS subsection.*
6. Starter solenoid
   - *Test solenoid, wiring and connections.*
7. Damaged starter or ground cables
   - *Carry out SOLENOID DYNAMIC TEST.*
8. Obstructed starter drive gear assembly
   - *Check/repair, refer to PTO HOUSING AND MAGNETO.*
9. No ground provided by ECM to starter solenoid
   - *Refer to CONTINUITY TEST OF START/STOP SWITCH CONTROL CIRCUIT in this subsection.*

10. Engine cannot be rotated (possibly seized or jet pump blocked)
    - *Refer to ENGINE subsection.*

ENGINE CRANKS SLOWLY

1. Loose, corroded or dirty battery cable connections
   - *Check/clean/tighten.*
2. Discharged/weak battery
   - *Recharge and test. Refer to CHARGING SYSTEM subsection.*
3. Low voltage from starter solenoid
   - *Carry out a SOLENOID DYNAMIC TEST.*
4. Damaged starter or ground cables
   - *Carry out SOLENOID DYNAMIC TEST.*
5. Worn starter
   - *Check.*

STARTER TURNS, BUT STARTER DRIVE DOES NOT MESH WITH RING GEAR

1. Worn starter drive gear/starter gear/ring gear
   - *Replace worn parts. Refer to STARTER GEAR in this subsection and PTO HOUSING AND MAGNETO subsection.*
2. Defective drive
   - *Replace starter drive. Refer to PTO HOUSING AND MAGNETO subsection.*

STARTER KEEPS RUNNING

1. Shorted solenoid winding
   - *Replace solenoid.*
2. Melted solenoid contacts
   - *Replace solenoid.*
3. Sticking or defective starter drive
   - *Lubricate or replace. Refer to PTO HOUSING AND MAGNETO.*

PROCEDURES

⚠ WARNING

When carrying out any kind of maintenance on the starting system, always disconnect the battery ground cable. This will eliminate the possibility of shorting out a power cable, and generating a spark which could result in a fire or and explosion. Do not place any tool on the battery.

ENGINE START/STOP SWITCH

START/STOP Switch Circuit Continuity Test

1. Remove START/STOP switch fuse (F3).

For fuse box access, refer to *POWER DISTRIBUTION AND GROUNDS* subsection.

Disconnect connector "B" from the ECM, refer to *WIRING HARNESS AND CONNECTOR* subsection.

Install ECM ADAPTER TOOL (P/N 529 036 166) on ECM harness connector "B".

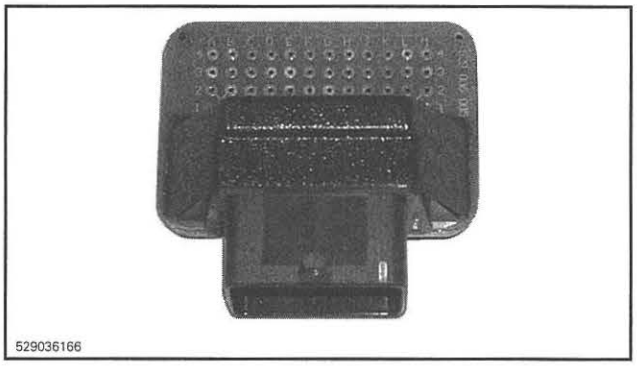

Set the FLUKE 115 MULTIMETER (P/N 529 035 868) to Ω.

Press and hold the START/STOP switch and test for continuity of the switch circuit as per following table.

CONTINUITY TEST OF START/STOP SWITCH CIRCUIT (BUTTON PRESSED AND HELD)		
FUSE BOX	ECM CONNECTOR B	RESISTANCE
Pin A6	B-D1	Close to 0 Ω (continuity)

2. If the reading is as specified, the START/STOP switch and its wiring are good.
3. If a high resistance or an open circuit is measured, carry out *START/STOP SWITCH CONTINUITY TEST.*

START/STOP Switch Continuity Test

1. Remove START/STOP switch fuse (F3).
2. Disconnect the 24-pin steering connector:

GTS, GTI, GTR, Wake and RXP Series

Open the front storage cover and remove the access panel.

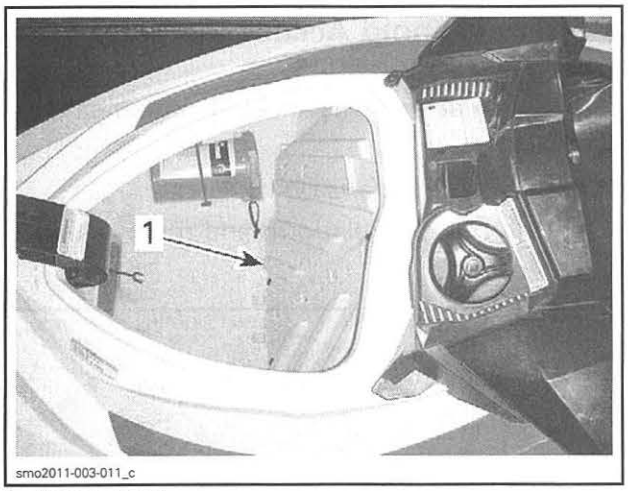

1. Access panel

RXT, GTX (Models Without Suspension) and Wake Pro

Open front storage compartment cover.

Remove front storage bin.

Disconnect the top air ventilation hoses.

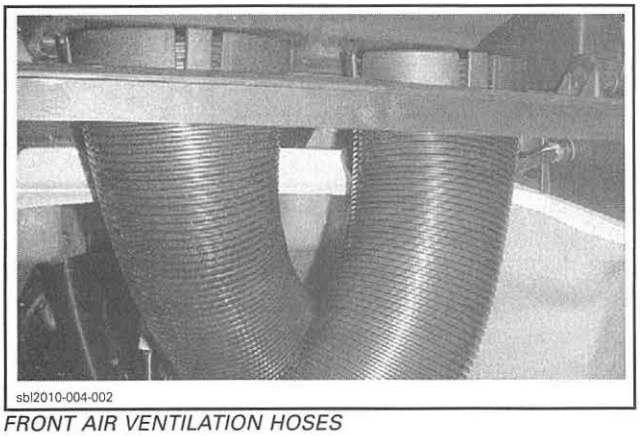

FRONT AIR VENTILATION HOSES

RXT, GTX (Models Without Suspension) and Wake Pro

Open front storage compartment cover.

Remove front storage bin.

For easier access, rise the moving deck using the gauge.

All Models

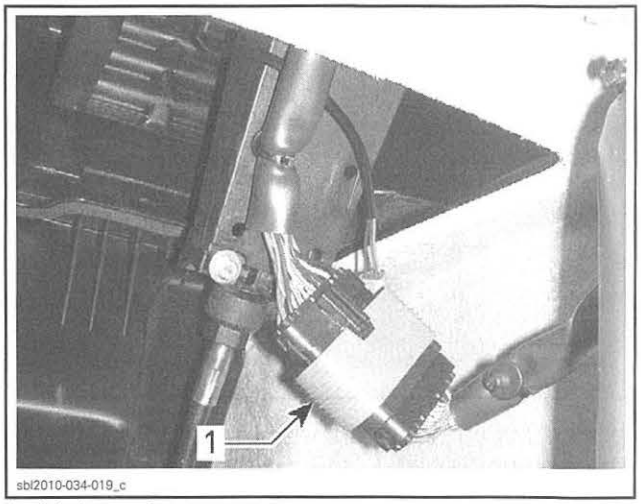

1. 24-pin steering connector

3. Connect the DIAGNOSTIC HARNESS (P/N 529 036 188) to make an in-line connection between the disconnected connector.

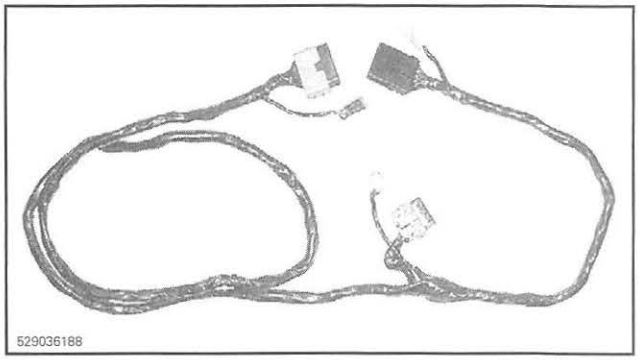

NOTE: Use the 24 pin connectors only.

4. Use the FLUKE 115 MULTIMETER (P/N 529 035 868) and select Ω.
5. Measure resistance through switch as per following table.

CONTINUITY TEST OF START/STOP SWITCH CIRCUIT		
SWITCH POSITION	DIAGNOSTIC HARNESS CONNECTOR	RESISTANCE
Released	Pins 2 and 23	Infinite (OL)
Pressed and held		Close to 0 Ω

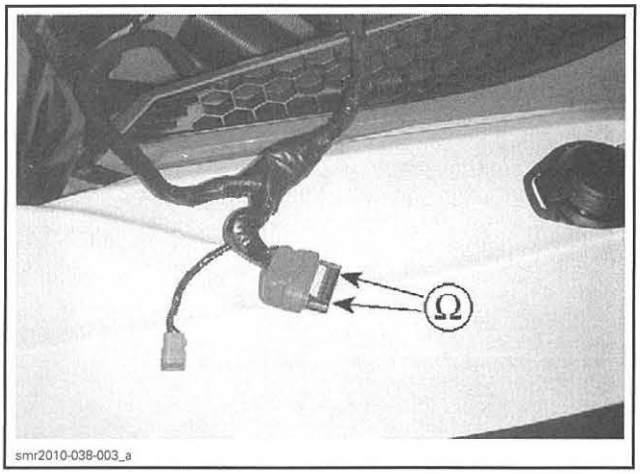

If the switch does not test as specified, replace the engine START/STOP switch.

If the switch tests as specified, check for an open circuit between connections as per table:

OPEN CIRCUIT TEST		
CIRCUIT CONNECTIONS		RESISTANCE
Fuse box pin A6	Steering connector pin 23	Must be close to 0 Ω
Steering connector pin 2	ECM connector B, pin D1	

STARTER SOLENOID

Starter Solenoid Access (GTS, GTI, GTR, Wake and RXP Series)

Open the front storage cover and remove the access panel.

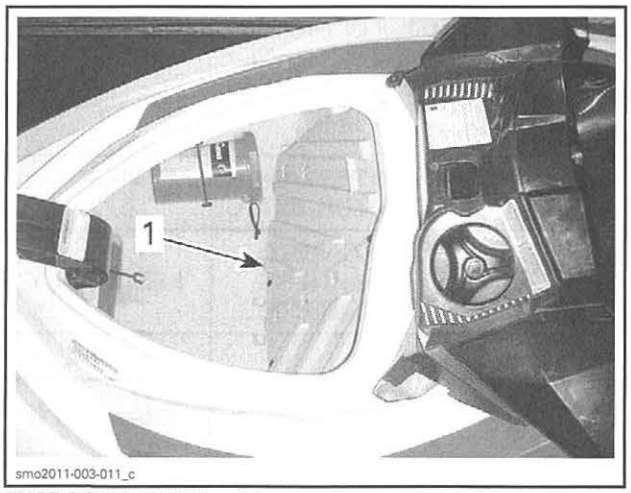

FUSE BOX ACCESS
1. Access panel

The starter solenoid is located underneath the fuse box.

Starter Solenoid Access (RXT, GTX and Wake Pro Series)

The starter solenoid is located underneath the fuse box.

Models with Suspension

Open the boarding platform and remove the RH storage bin.

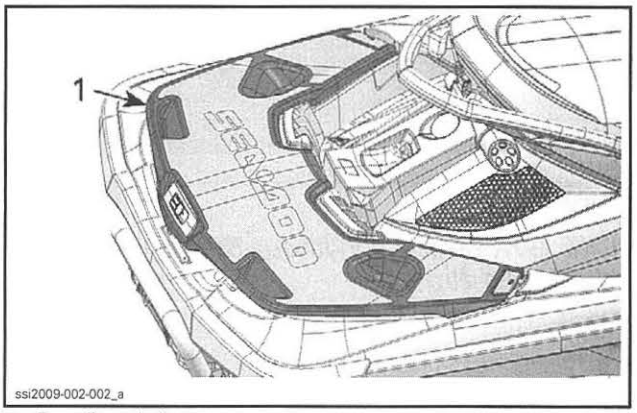

1. Boarding platform

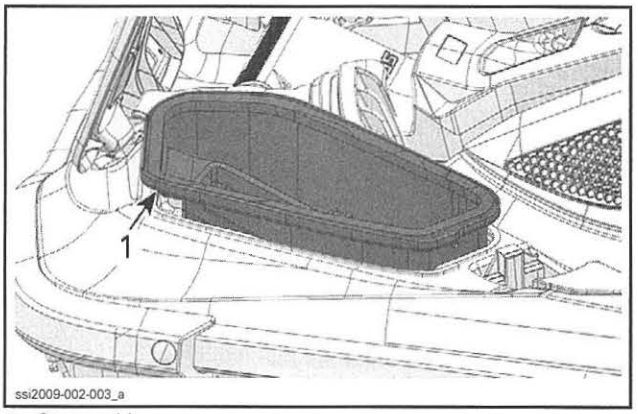

1. Storage bin

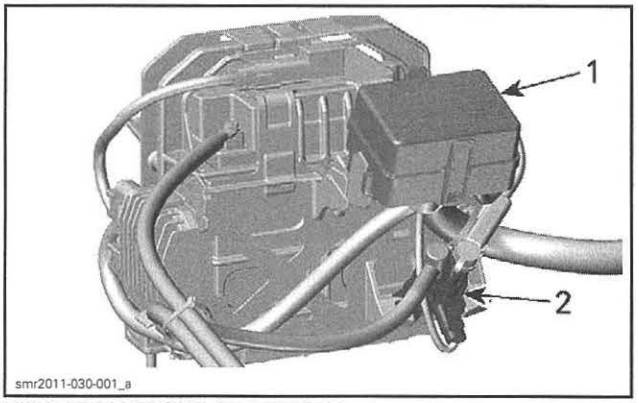

VIEW FROM FRONT OF BATTERY
1. Fuse box
2. Starter solenoid

Models Without Suspension

Open the RH side access panel on the rear deck.

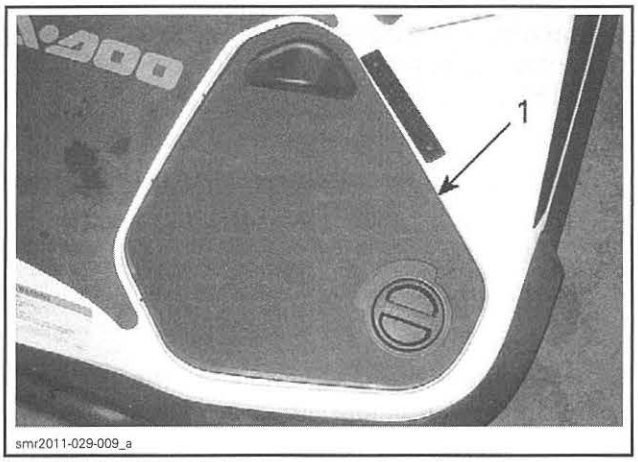

1. RH side access panel

All RXT/GTX and Wake Pro Models

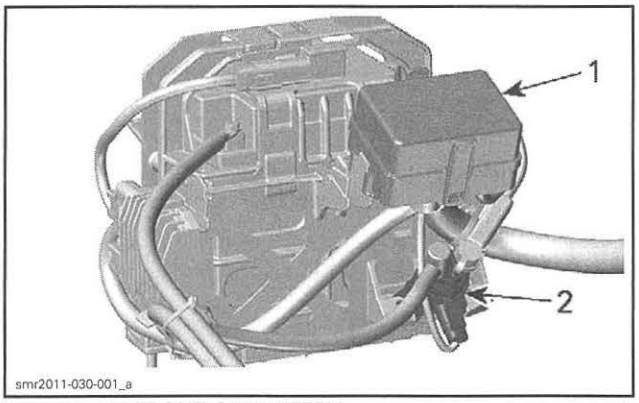

VIEW FROM FRONT OF BATTERY
1. Fuse box
2. Starter solenoid

Solenoid Input Voltage Test (Solenoid Coil)

1. Make sure F16 fuse is powered and in good condition before testing.
2. Detach the electrical component support from the battery holder. Refer to *ELECTRICAL COMPONENT SUPPORT* in *CHARGING SYSTEM* subsection.
3. Disconnect solenoid connector, refer to *STARTER SOLENOID ACCESS* in this subsection.

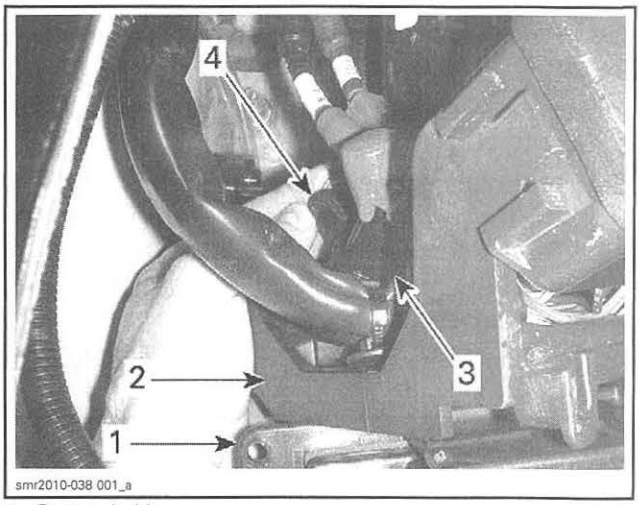

1. Battery holder
2. Electrical components support
3. Starter solenoid
4. Solenoid connector

4. Set the FLUKE 115 MULTIMETER (P/N 529 035 868) to Vdc.
5. Install tether cord on the engine cut-off switch.
6. Press the START/STOP button to activate ECM.
7. Measure voltage within 3 minutes after START/STOP switch has been depressed.

SOLENOID INPUT VOLTAGE TEST (SOLENOID COIL)		
TEST PROBES		VOLTAGE READING
Pin A (VIOLET)	Battery ground	Battery voltage

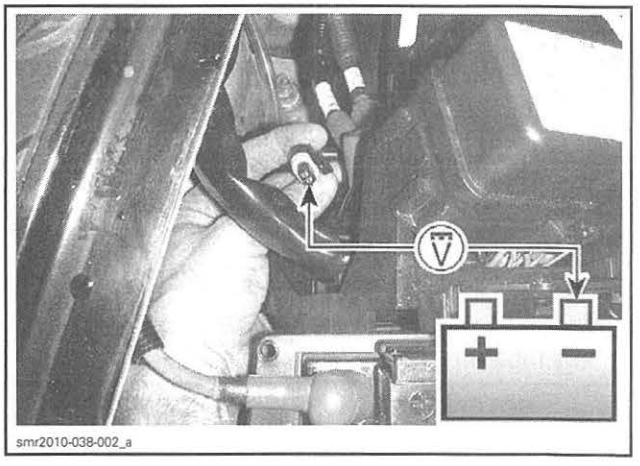

If test succeeded, carry out a *SOLENOID CONTROL CIRCUIT TEST.*

If test failed, carry out a *START/STOP SWITCH CIRCUIT CONTINUITY TEST.*

Solenoid Control Circuit Continuity Test

1. Set the FLUKE 115 MULTIMETER (P/N 529 035 868) to Ω.
2. Disconnect connector "B" from ECM, refer to *WIRING HARNESS AND CONNECTOR* subsection.
3. Install ECM ADAPTER TOOL (P/N 529 036 166) on ECM harness connector.
4. Test continuity of wiring from solenoid to ECM as per following table.

SOLENOID CONTROL CIRCUIT TEST		
SOLENOID CONNECTOR	ECM CONNECTOR B	RESISTANCE
Pin B (BR/YL)	B-L4	Close to 0 Ω (continuity)

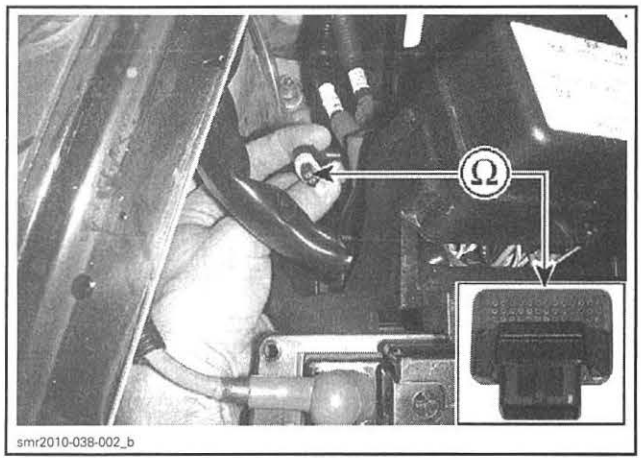

If test failed, repair or replace wiring/connectors.

If test succeeded, carry out a *SOLENOID COIL RESISTANCE TEST*.

Solenoid Coil Resistance Test

1. Set multimeter to Ω.
2. Disconnect solenoid connector.
3. Measure solenoid coil resistance as per following table.

SOLENOID COIL RESISTANCE TEST		
SOLENOID CONNECTOR		RESISTANCE
Pin A	Pin B	4.5 to 5.5 Ω

If test fails, replace solenoid.

Solenoid Dynamic Test

1. Ensure fuse F16, battery, and starter solenoid are properly connected.
2. Make sure the battery ground cable is securely connected to the engine. Refer to *POWER DISTRIBUTION AND GROUNDS*.
3. Set ECM in engine drowned mode:
   - 3.1 Depress throttle lever.
   - 3.2 Install a rubber band to hold lever in full throttle position.
4. Set multimeter to Vdc.
5. Crank engine.
6. **As engine is cranking**, measure the voltage as per following tables.

SOLENOID DYNAMIC TEST (ENGINE CRANKING)		
TEST PROBES		VOLTAGE (DC)
Solenoid battery post	Battery ground	Battery voltage

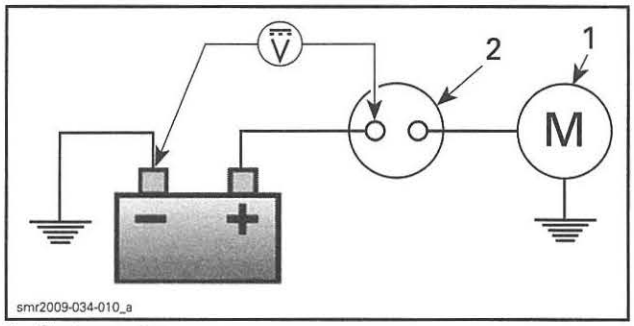

1. Starter motor
2. Starter solenoid

7. If test failed, check battery positive cable (from battery to solenoid).
8. If test succeeded, continue with next step.

SOLENOID DYNAMIC TEST (ENGINE CRANKING)		
TEST PROBES		VOLTAGE (DC)
Solenoid starter post	Battery ground	Battery voltage

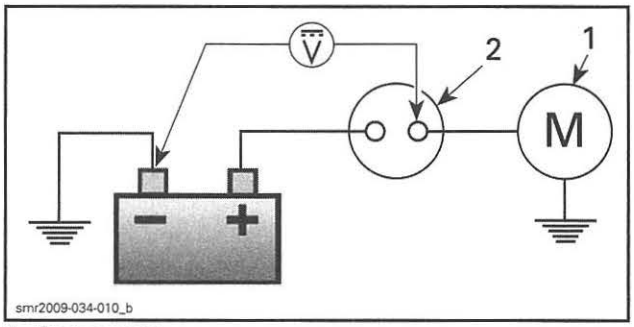

1. Starter motor
2. Starter solenoid

9. If test failed, carry out a *SOLENOID INPUT VOLTAGE TEST (SOLENOID COIL)*.

10. If test succeeded, continue with next step.

SOLENOID DYNAMIC TEST (ENGINE CRANKING)		
TEST PROBES		VOLTAGE (DC)
Solenoid battery post	Solenoid starter post	0.2 Vdc max.

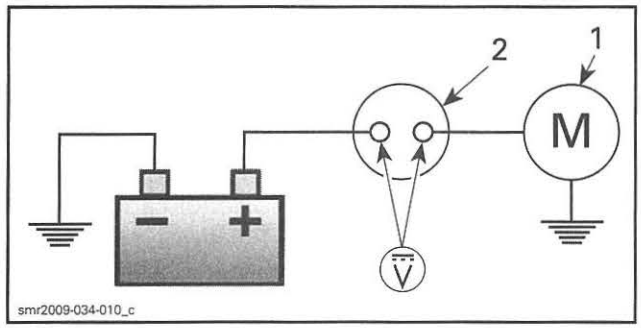

1. *Starter motor*
2. *Starter solenoid*

If test failed, replace solenoid.

If all solenoid dynamic tests are as specified, replace starter.

11. Remove rubber band from throttle lever.
12. Attach the electrical component support to the battery holder. Refer to *ELECTRICAL COMPONENT SUPPORT* in *CHARGING SYSTEM* subsection.
13. Reinstall removed parts.

Solenoid Removal

1. Disconnect battery. Refer to *CHARGING SYSTEM* subsection.

⚠ WARNING

Always disconnect the BLACK (-) battery cable first and reconnect last.

2. Remove diagnostic connector from battery holder.
3. Detach the electrical component support from the battery holder. Refer to *ELECTRICAL COMPONENT SUPPORT* in *CHARGING SYSTEM* subsection.
4. Disconnect voltage regulator/rectifier connectors.
5. Disconnect starter solenoid connector.
6. Push starter solenoid back against locking tab.

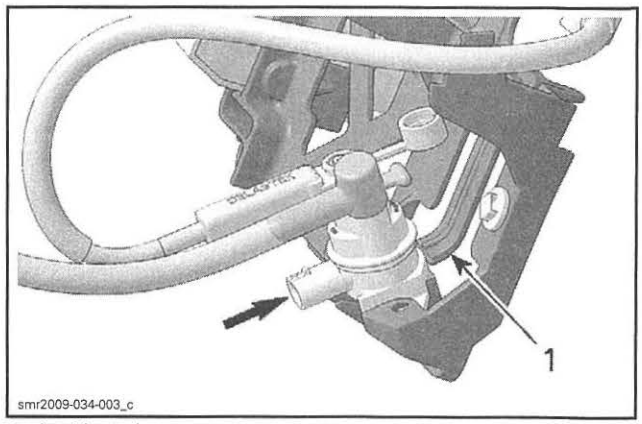

1. *Locking tab*

7. When the solenoid mounting flanges are clear of the electrical components support, slide solenoid up and out of the support.

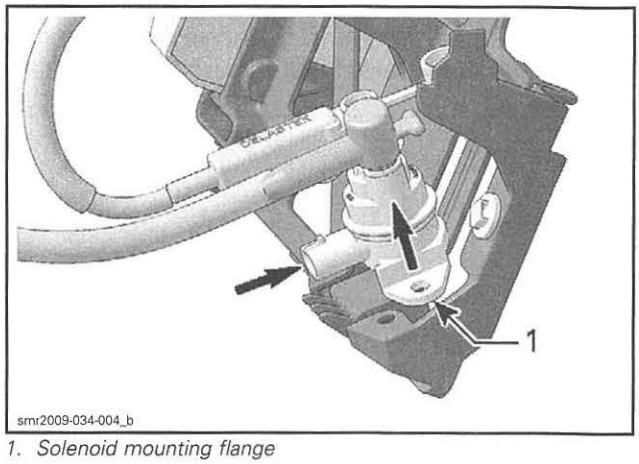

1. *Solenoid mounting flange*

8. Disconnect solenoid cables.

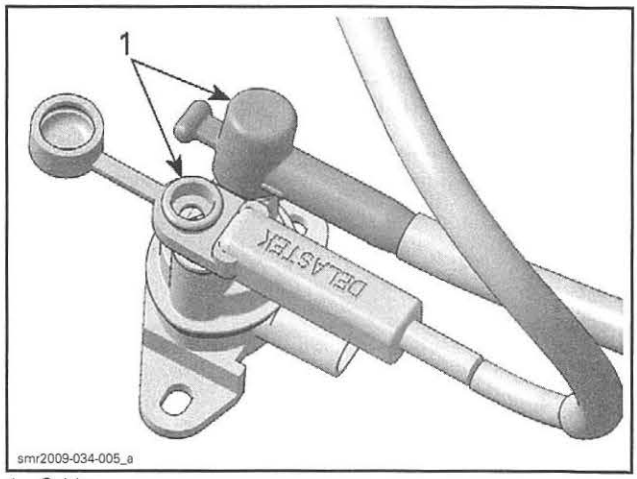

1. *Cables*

Solenoid Installation

1. Reverse the removal procedure and pay attention to the following.
2. Connect cables to solenoid as shown.

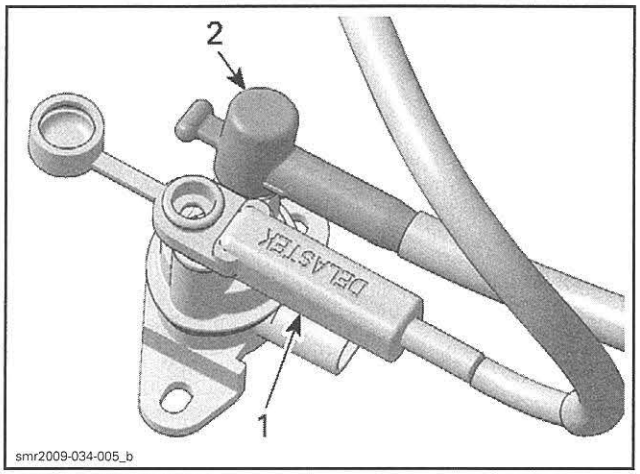

1. Cable from battery
2. Cable to starter motor

3. Insert solenoid in components support by pushing in against the locking tab, then down so the solenoid mounting flanges insert under the flanges on the electrical components support.

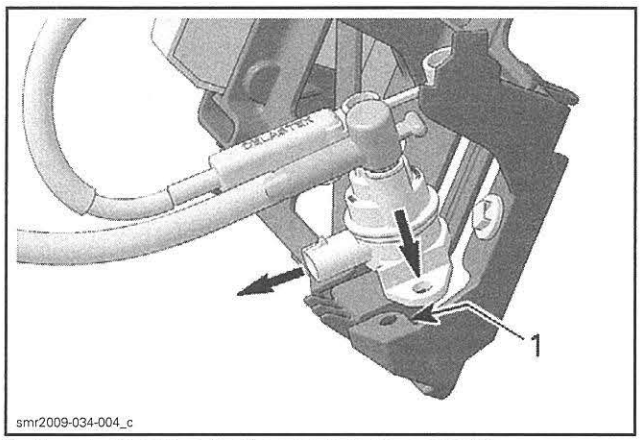

1. Insert solenoid under the components support flanges

4. Push the solenoid into the support until a "click" is heard (locking tab engagement).

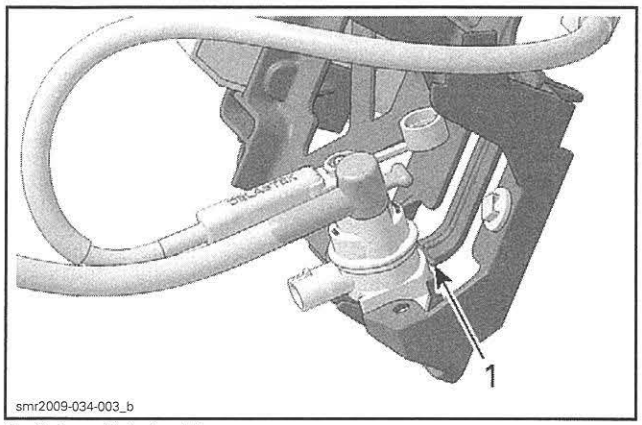

1. Solenoid locked here

NOTE: It may be necessary to pull retaining tab to ensure proper locking.

5. Wiggle solenoid to ensure it is securely locked.
6. Attach the electrical component support to the battery holder. Refer to *ELECTRICAL COMPONENT SUPPORT* in *CHARGING SYSTEM* subsection.
7. Reinstall remaining components.
8. Reconnect battery and test starter solenoid operation.

STARTER

Starter Quick Test

To easily bypass the starter solenoid and the start control circuits, proceed as follows.

- Use a fully charged 12 V battery with a capacity of at least 30 A-h.
- Use a set of booster cables to power the starter.

This procedure tests the following:

- Electric starter
- Starter power cable
- Battery to engine ground cable.

⚠ WARNING

Fuel, oil, or electrolyte vapors are flammable and may become explosive if certain conditions are met. These vapors may collect near the bottom of the hull when present. All types of ignition including electrical sparks are to be avoided when maintaining or testing vehicle.

⚠ WARNING

Always wear safety glasses when working with or around batteries. Be sure to leave the booster battery out of the watercraft.

1. Connect booster cables in this strict order:
2. **RED booster cable:**
3. Connect one clip to the starter post on the starter solenoid.
4. Connect the other clip to the positive (+) terminal on the external battery.
5. **BLACK booster cable:**
6. Connect one clip to the negative (-) battery terminal in the **vehicle**.
7. Momentarily apply the second clip to the negative (-) terminal of the **external** battery.

⚠ WARNING

Always use an external battery for this test to prevent any electrical sparks from occurring within the hull. Always make the final connection to the external battery negative (-) terminal using the BLACK booster cable clip. Do not short starter solenoid contacts across the main power connections on the relay with a tool that would cause electrical sparks. Failure to follow this procedure may result in an explosion.

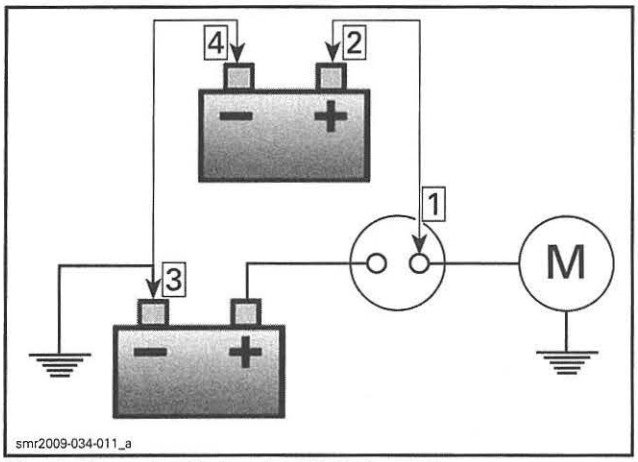

Step 1: Connect cable to solenoid starter post
Step 2: Connect cable to external battery positive post
Step 3: Connect cable to vehicle battery negative post
Step 4: Make a momentary contact

If engine does not crank (or cranks slowly), check the following:

- Booster cable connections
- Vehicle battery ground cable connections to engine
- Starter power cable/connections from solenoid to starter
- Carry out a *SOLENOID DYNAMIC TEST.*

If the above items all test good, replace the starter.

Starter Removal

1. Open or remove seat.

Models with Suspension

2. Remove rear ventilation cover. Refer to *BODY.*
3. Remove deck extension. Refer to *BODY.*
4. Lower moving deck.

All Models

5. Remove air intake silencer. Refer to *AIR INTAKE SYSTEM* subsection.
6. Disconnect battery. Refer to *CHARGING SYSTEM* subsection.

⚠ WARNING

Always disconnect the BLACK (-) battery cable first and reconnect last.

NOTE: For better access to the starter, work from RH side and lay across the watercraft.

7. Disconnect starter power cable.
8. Remove starter retaining screws.

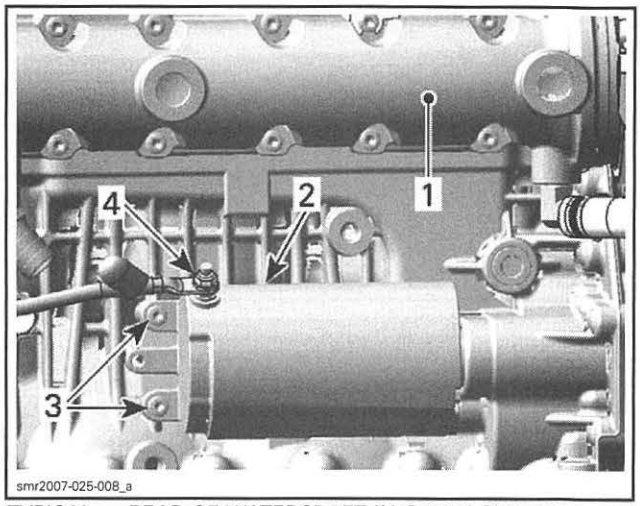

TYPICAL — REAR OF WATERCRAFT IN ON RH SIDE OF ILLUSTRATION
1. Exhaust manifold
2. Starter
3. Starter retaining screws
4. Starter power cable retaining nut

Starter Gear Removal

1. Remove starter.
2. Remove gear retaining circlip and pull out starter gear.

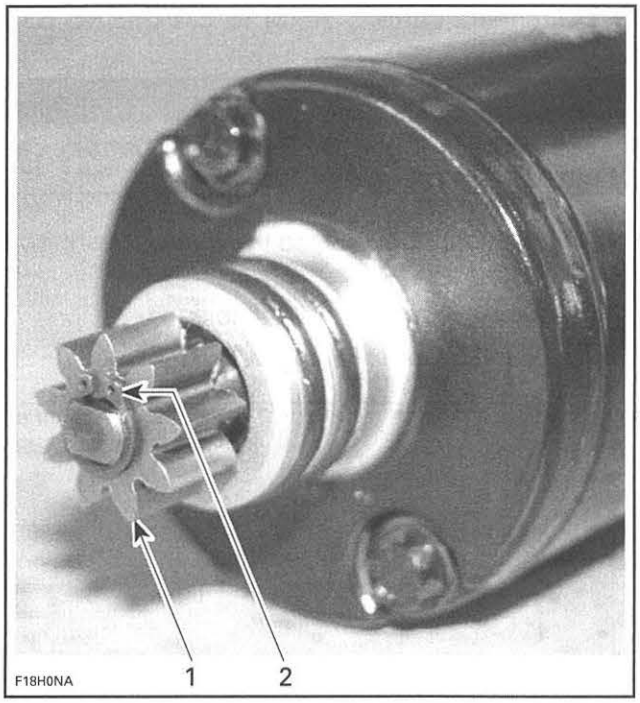

1. Retaining circlip
2. Starter gear

Starter Gear Installation

Installation is the reverse of removal procedure. However, pay particular attention to the following.

Use a new circlip.

Starter Installation

Installation is the reverse of the removal procedure. However, pay particular attention to the following.

1. Ensure starter and engine mating surfaces are free of debris. Serious problems may arise if starter is not properly aligned.
2. Apply ISOFLEX GREASE TOPAS NB 52 (P/N 293 550 021) on starter O-rings.

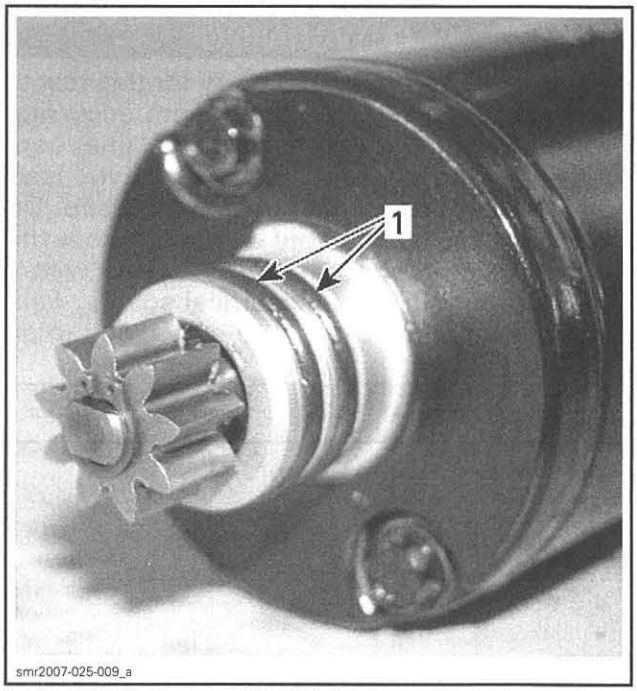

1. Apply Isoflex grease Topas NB 52

3. Install starter.

TIPS TO MESH STARTER GEAR WITH INTERMEDIATE GEAR
When starter does not mesh: – Pull starter out – Temporarily remove O-rings from starter – Slightly rotate starter gear – Reinstall starter
If it still does not mesh: – Pull starter out. – Slightly rotate starter gear – Reinstall starter – Repeat these steps until it meshes
When it meshes: – Pull starter out. – Be careful not to rotate starter gear out of position – Reinstall O-rings to starter – Reinstall starter

4. Apply LOCTITE 243 (BLUE) (P/N 293 800 060) on retaining screws and torque to 10 N•m (89 lbf•**in**).
5. Connect the RED positive cable to the starter and torque retaining nut to 7 N•m (62 lbf•**in**).

⚠ WARNING

To prevent electric shock whenever connecting the RED power cable to the starter motor, ensure the BLACK (-) battery cable is disconnected.

6. Apply DIELECTRIC GREASE (P/N 293 550 004) on terminal and nut.
7. Install rubber protector over starter power cable retaining nut.

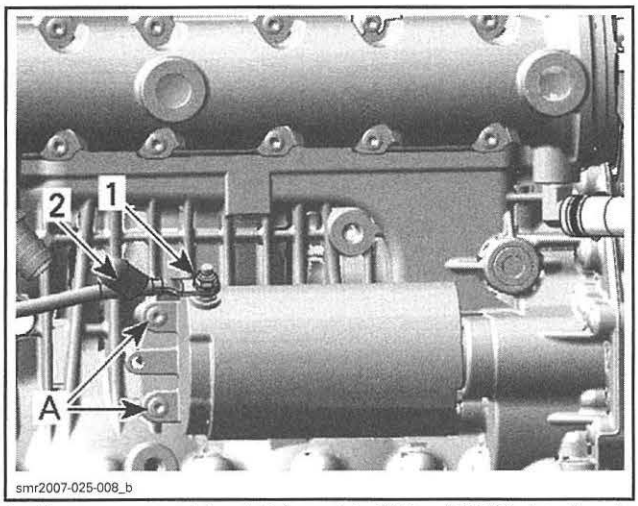

smr2007-025-008_b

1. *Torque power cable retaining nut to 7 N•m (62 lbf•**in**) and apply dielectric grease*
2. *Install rubber protector*

*A. 10 N•m (89 lbf•**in**)*

8. Reinstall all remaining removed parts.

DIGITALLY ENCODED SECURITY SYSTEM (D.E.S.S.)

GENERAL

SYSTEM DESCRIPTION

The D.E.S.S. system allows the engine to start only if a tether cord cap is installed on the engine cut-off switch and the D.E.S.S. key is recognized as valid by the ECM.

The D.E.S.S. key is quite flexible:

- Up to 8 keys can be programmed to a watercraft.
- The same DESS key can be programmed to different watercraft.

The following components are specially designed for this system:

- ECM
- D.E.S.S. key
- Engine cut-off switch.

The tether cord cap contains a magnet and a ROM chip:

- The magnet closes the reed switch inside the engine cut-off switch, which is the equivalent of a mechanical ON/OFF switch.
- The chip has a unique digital code; it must be recognized by the ECM as valid to allow engine starting.

D.E.S.S. Key Types

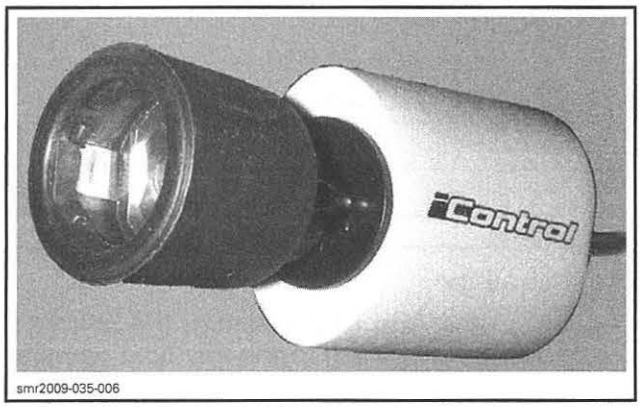

smr2009-035-006

In addition to the normal D.E.S.S. key, other special keys can be programmed so that the vehicle can only be operated at a limited speed. Such a feature is ideal for first time riders or renters.

The tether cord floats are color-coded to differentiate the type of D.E.S.S. keys.

D.E.S.S. KEY TYPE	FLOAT COLOR
Normal key	YELLOW or BLACK
Learning key	GREEN
Rental key (1)	ORANGE
(1) Rental key can be programmed to a rental watercraft only.	

Upon tether cord installation, the key type used is momentarily displayed by the multifunction gauge.

The Learning keys can be set through 5 settings to control the maximum watercraft speed. Refer to *INTELLIGENT THROTTLE CONTROL (iTC)* subsection.

D.E.S.S. Key Beeper Codes

BEEPER	SIGNIFICATION
A 0.5 second beep every 5 seconds	Indicates the D.E.S.S. is reading the key.
2 short beeps	Indicates the D.E.S.S. recognizes the key.
A 1 second beep every 5 seconds	Indicates the D.E.S.S. does not recognize the key.

NOTE: Other beeps not related to DESS can be heard. Refer to *DIAGNOSTIC AND FAULT CODES*.

TROUBLESHOOTING

DIAGNOSTIC GUIDELINES

The following is provided to help in diagnosing the probable cause of a problem. It is a guideline and should not be assumed to list all possible causes.

NO BEEP CODE WHEN KEY IS INSTALLED ON ENGINE CUT-OFF SWITCH — ENGINE CAN NOT BE STARTED

1. **Gauge shuts-down after its WOW test: Defective engine cut-off switch**
   - *Check engine cut-off switch. Refer to IGNTION SYSTEM subsection.*

NO BEEP CODE WHEN KEY IS INSTALLED ON ENGINE CUT-OFF SWITCH — ENGINE CAN BE STARTED

1. **Defective gauge beeper**
   - *Check gauge beeper. Refer to INFORMATION CENTER (GAUGE).*

GAUGE DISPLAYS "READING KEY" AND THERE IS NO KEY INSTALLED ON ENGINE CUT-OFF SWITCH

1. **Gauge shuts-down after 3 minutes: Defective engine cut-off switch**
   - *Check engine cut-off switch.*

PROCEDURES

D.E.S.S. KEY

D.E.S.S. Key Recognition

To allow key recognition, carry out the following steps:

1. Briefly press the START/STOP button to wake up the ECM.
2. Securely install the tether cord on watercraft engine cut-off switch.
3. Press and hold the START/STOP button to start engine.

D.E.S.S. Key Programming

1. Connect the watercraft to latest applicable B.U.D.S. Refer to *COMMUNICATION TOOLS AND B.U.D.S.* subsection.
2. **IMPORTANT:** Ensure all connections have been made **before starting B.U.D.S.** to allow proper operation.
3. Briefly press START/STOP button to power the ECM.
4. Install a tether cord on the engine cut-off switch to program a D.E.S.S. key.

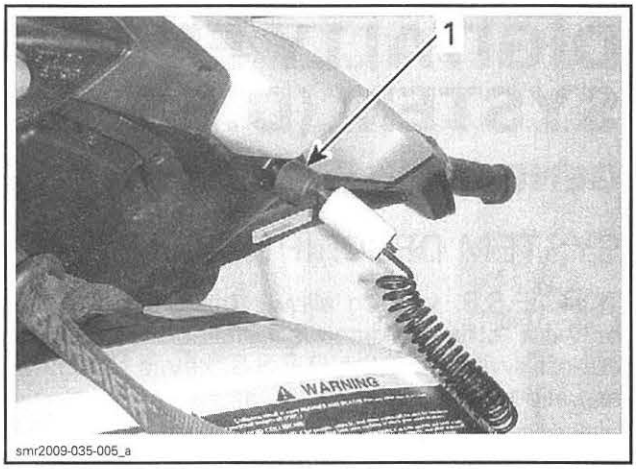

1. Tether cord on engine cut-off switch

5. Read ECM using **Read Data** button.

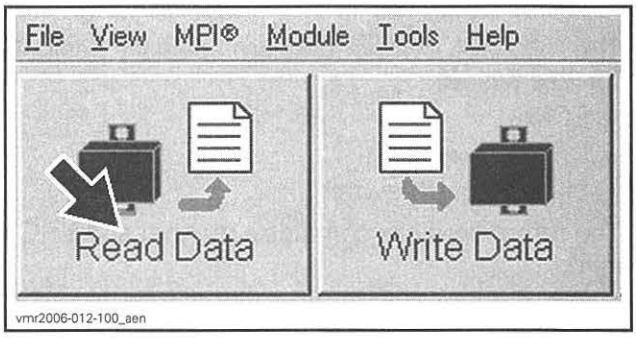

6. Click on **Keys** tab.

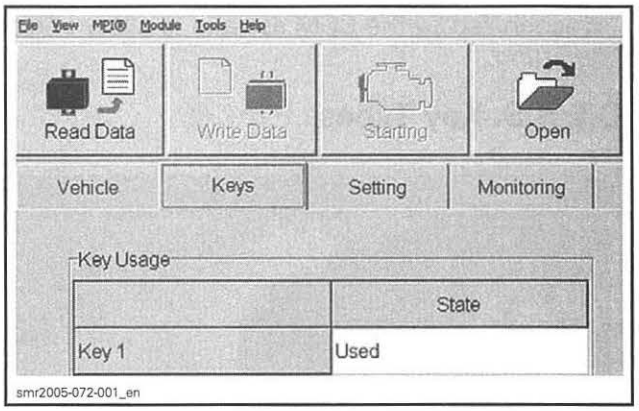

Adding a Key

1. Click on the **Add Key** button at the bottom of the screen according to the key type you want to program.

⚠ WARNING

If programming a Learning or Rental key, be sure to use the proper key type (color) to avoid possible confusion.

NOTE: A rental key can be programmed to a rental watercraft only.

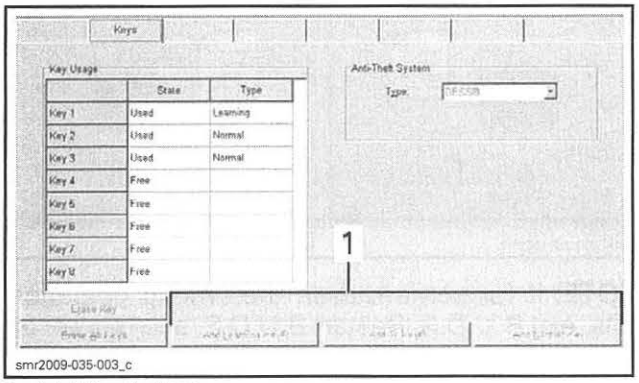

1. Add Key *buttons*

2. After approximately 10 seconds, the following window will pop up confirming the new key has been saved **in the PC computer**.

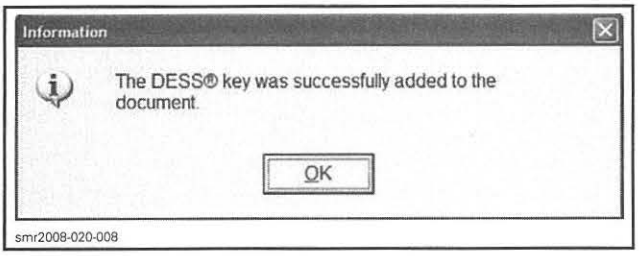

3. If programming is complete, write the changes to the ECM. Refer to *WRITING CHANGES TO ECM* in this subsection.

Adding Another Key

1. Remove the tether cord from the engine cut-off switch.
2. Install the next tether cord on the engine cut-off switch.
3. Click on the **Add Key** button.
4. If programming is complete, write the changes to the ECM. Refer to *WRITING CHANGES TO ECM* in this subsection.

Erasing a Key

1. Install the tether cord on the engine cut-off switch.

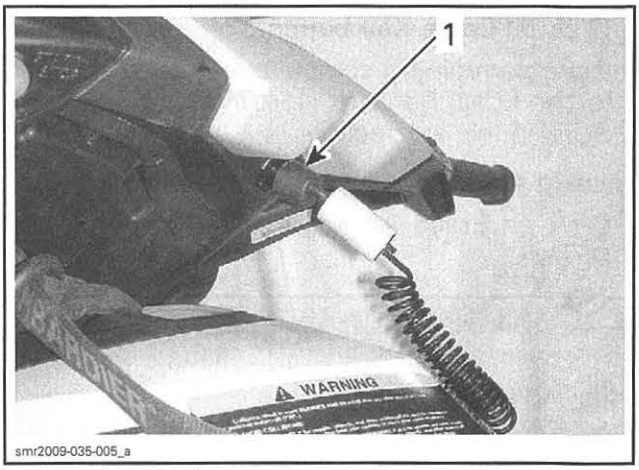

1. *Key to be erased*

2. Click on **Erase Key** button at bottom of B.U.D.S. screen.

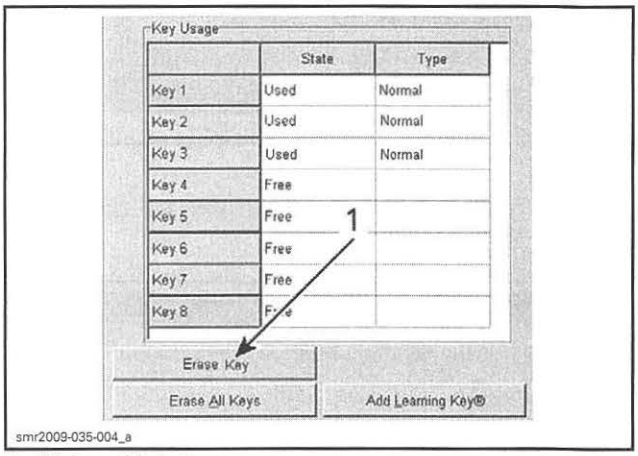

1. *Click on this button*

After approximately 10 seconds the following message will appear.

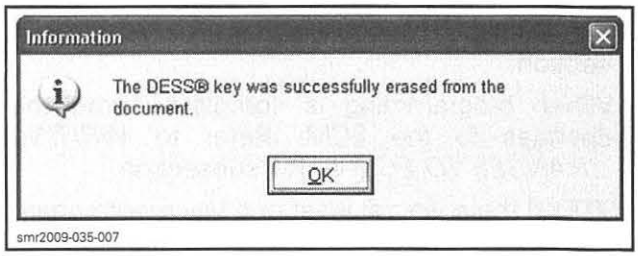

The key is now erased **in the PC computer**.

3. If programming is complete, write the changes to the ECM. Refer to *WRITING CHANGES TO ECM* in this subsection.

Erasing Another Key

1. Remove the tether cord from the engine cut-off switch.
2. Install the next tether cord to be erased on the engine cut-off switch.

3. Click on **Erase Key** button.
4. If programming is complete, write the changes to the ECM. Refer to *WRITING CHANGES TO ECM* in this subsection.

Erasing All Keys

1. Click on **Erase All Keys** button at bottom of screen.

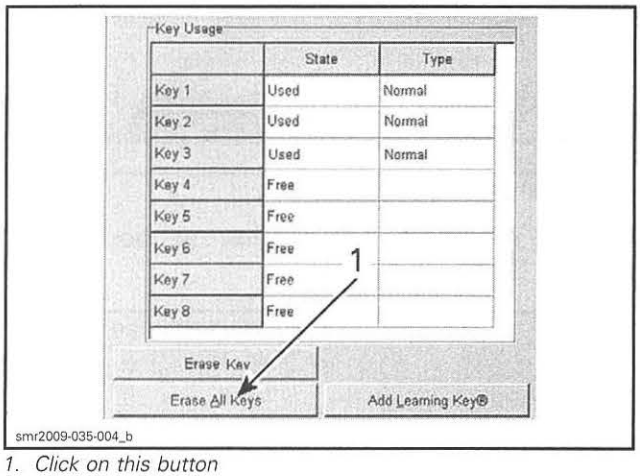

1. Click on this button

NOTE: The following message will be displayed in B.U.D.S.

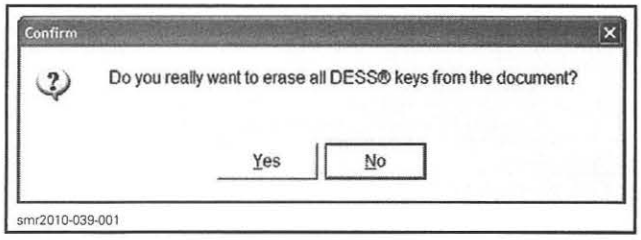

2. Click **Yes** to proceed with erasing all keys.
3. When done, program at least one new key to the vehicle. Refer to *ADDING A KEY* in this subsection.
4. When programming is complete, write the changes to the ECM. Refer to *WRITING CHANGES TO ECM* in this subsection.

NOTE: If there isn't at least one key programmed to the watercraft, B.U.D.S. will not allow you to write the changes to the ECM and will prompt you to add a key.

Writing Changes to ECM

Save the changes made in B.U.D.S. **into the ECM** as follows.

1. Click the **Write Data** button.

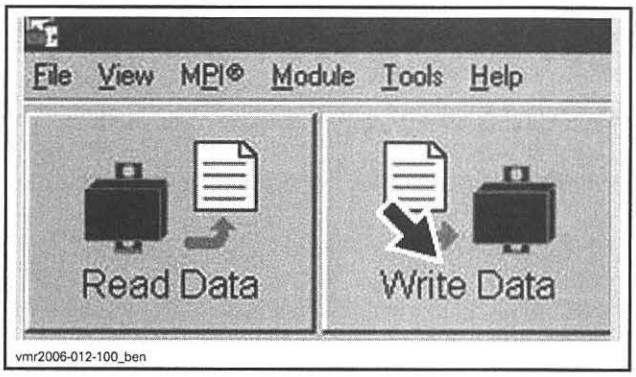

NOTE: If for some reason the writing operation fails, exit B.U.D.S. Restart B.U.D.S. and reenter all the previously lost information.

2. After the write operation, remove key from D.E.S.S. post.
3. Try the key(s) on the watercraft.

INFORMATION CENTER (GAUGE)

SERVICE TOOLS

Description	Part Number	Page
DIAGNOSTIC HARNESS	529 036 188	413, 416–417
FLUKE 115 MULTIMETER	529 035 868	412, 414, 416, 418, 422

SERVICE PRODUCTS

Description	Part Number	Page
DIELECTRIC GREASE	293 550 004	407, 420, 424

GENERAL

INFORMATION CENTER (GAUGE) (GTS)

⚠ WARNING

Do not adjust the display while riding, you could lose control.

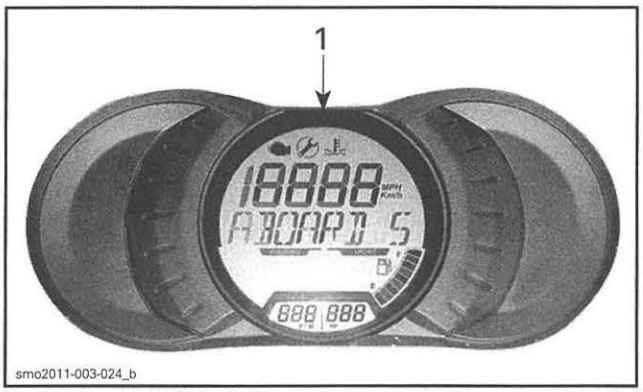

TYPICAL - GTS MODELS
1. Multifunction gauge

Multifunction Gauge Description

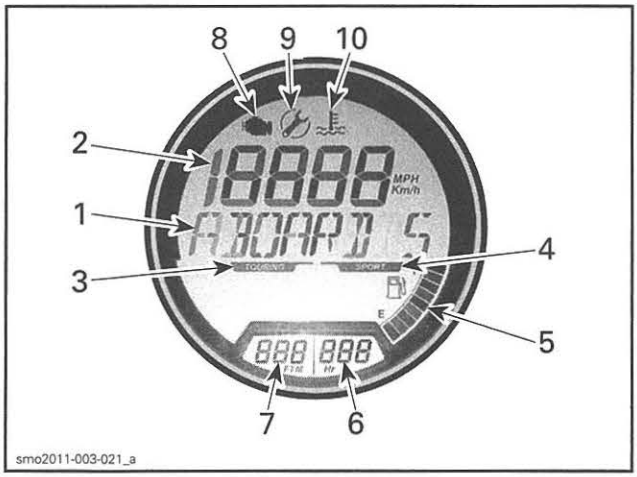

1) Multifunction Display

The multifunction display is used to:
- Display the WELCOME message on power up
- Display the KEY recognition message
- Display the engine RPM
- Display fault messages.

NOTE: If a fault occurs, it will periodically scroll the applicable fault message in the display and revert to the RPM indication depending on the severity of the fault detected.

2) Numerical Display

The numerical display provides an indication of estimated watercraft speed.

3) Touring Mode Indicator

When the TOURING mode indicator is ON, the default TOURING mode is active.

Refer to *OPERATING MODES* subsection for details.

4) Sport Mode Indicator

The SPORT mode indicator is normally off.

When sport mode of operation is selected, the SPORT mode indicator will come on and stay on until sport mode is deactivated, or the watercraft is shut down.

NOTE: Sport mode is not the default riding mode. To be active, it must be selected on after starting the engine.

Refer to *OPERATING MODES* subsection for detailed instructions.

5) Fuel Level Indication

A bar gauge located in the bottom RH side of the multifunction display continuously indicates the amount of fuel in the fuel tank while riding.

When the fuel tank is full, 8 segments (bars) of the indicator are turned on. The top segment is not used.

When there is only 2 segments of fuel indicated (approximately 25% fuel tank capacity or 14 L (3.7 U.S. gal.), the following indications will come ON to advise you that a low fuel condition exists.

LOW FUEL LEVEL INDICATIONS	
Last 2 fuel gauge segments	Flashing
Fuel tank symbol	
Audible advisory (one long beep)	Periodically
Scrolling LOW FUEL advisory message	

6) Hour Meter Display

Continuously displays the accumulated engine hours.

7) Water Depth Display

The water depth display provides an indication of the lake water depth.

The system is capable of indicating water depth under the hull in single increments up to 50 m (164 ft).

NOTE: Under certain conditions, the display may stop indicating. The display's ability to provide an indication of the waters's depth depends on the conditions of use.

NOTE: The water depth indication is only available when a depth sounder is installed and detected.

⚠ WARNING

Never use the depth sounder as a warning device to ride in shallow water.

8) Check Engine Light

The check engine light comes ON when a fault is detected by the engine management system.

The check engine light may be accompanied by the applicable scrolling fault message in the multifunction display.

When the check engine light comes on, contact your authorized Sea-Doo dealer.

9) Maintenance Reminder Indicator

The maintenance reminder indicator comes ON when required maintenance is due.

When this indicator comes on, bring your watercraft to your authorized Sea-Doo dealer to have it serviced and to have the maintenance reminder indicator reset.

10) High Temperature Indicator

The high temperature indicator comes ON when a high engine temperature or a high exhaust system temperature is detected. Refer to *TROUBLESHOOTING* section.

INFORMATION CENTER (GAUGES) (GTI/GTR/WAKE)

⚠ WARNING

Do not adjust the display while riding, you could lose control.

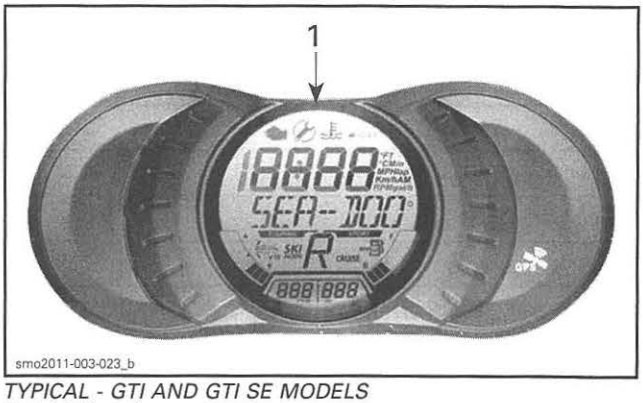

TYPICAL - GTI AND GTI SE MODELS
1. Multifunction gauge

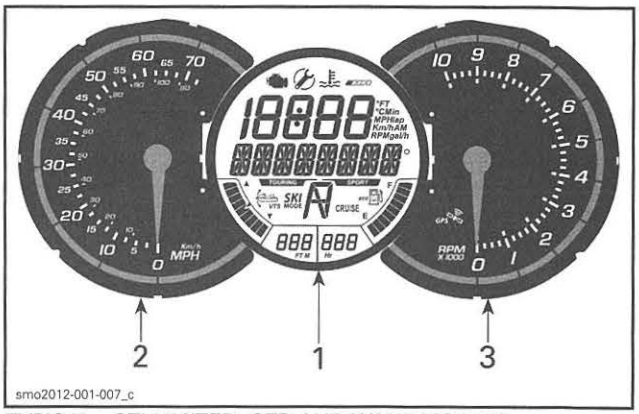

TYPICAL - GTI LIMITED, GTR AND WAKE MODELS
1. Multifunction gauge
2. Analog speedometer
3. Analog tachometer

Analog Speedometer Description

The speedometer, located in the LH side of the information center, provides an analog indication of the speed of the watercraft in miles per hour (MPH) and kilometers per hour (km/h).

The speed indication is based on a GPS (Global Positioning System) incorporated within the information center.

If for some reason the GPS signal is lost, a default mode is used whereby, the speed is calculated using information received from other systems to provide an estimated watercraft speed.

Analog Tachometer Description

The tachometer provides an analog indication of the revolutions per minute (RPM) of the engine. Multiply the indicated number by 1000 to obtain the actual engine RPM.

Multifunction Gauge Features

	GTI	GTI SE	GTI LIMITED	GTR	WAKE
Touring mode indicator	X	X	X	X	X
Sport mode indicator	X	X	X	X	X
Fuel level indication	X	X	X	X	X
Hour meter display	X	X	X	X	X
Water depth indication	Opt	Opt	Opt	Opt	Opt
ECO mode indicator	X	X	X	X	X
CRUISE mode indicator	Opt	Opt	X	Opt	X
iBR position indicator	X	X	X	X	X
SKI mode indicator	Opt	Opt	Opt	Opt	X
VTS position indication	Opt	X	X	X	X

X = Indicates a **standard** feature
Opt = Indicates a feature available as an **option**

Multifunction Gauge Description

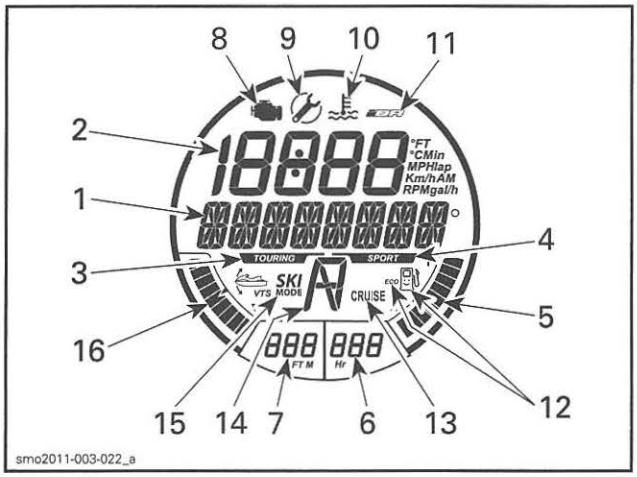

smo2011-003-022_a

1) Multifunction Display

The multifunction display is used to:
- Display the WELCOME message on power up
- Display the KEY recognition message
- Provide various indications as selected by the operator
- Activating or changing various functions or modes of operation
- Display scrolling messages of function activation or system faults
- Display fault codes.

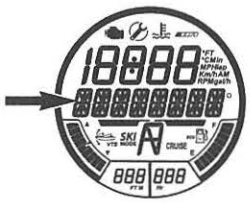

MULTIFUNCTION DISPLAY

NOTE: The default indication in the multifunction display is the compass direction.

2) Numerical Display

The numerical display is used to provide a variety of indications as selected by the operator using the DISPLAY function in the multifunction display.



NUMERICAL DISPLAY

1. Numerical display indication
2. Unit of measurement of indication

AVAILABLE INDICATIONS IN NUMERICAL DISPLAY					
	GTI	GTI SE	GTI Limited	GTR	WAKE
Watercraft speed	Indication by default				
Engine RPM	X	X	X	X	X
Engine temperature	Opt	Opt	Opt	Opt	Opt
Clock	N.A.	X	X	X	X
Learning key settings	X	X	X	X	X
CRUISE SPEED setting	Opt	Opt	X	Opt	X
SLOW SPEED MODE setting	Opt	Opt	X	Opt	X
VTS preset	Opt	Opt	X	Opt	Opt
VTS settings	Opt	X	N.A.	X	X
SKI MODE settings	Opt	Opt	Opt	Opt	X
Fuel consumption (instant and average)	Opt	X	X	X	X
Fuel autonomy (distance and time to empty)	Opt	Opt	X	Opt	Opt
Lap timer	Opt	Opt	Opt	Opt	Opt
Top speed/RPM Average speed/RPM	Opt	Opt	Opt	Opt	Opt
Altitude	N.A.	N.A.	X	N.A.	N.A.
X = An X indicates a **standard** feature Opt = Feature available as an **option** N.A. = Not Available					

When the information center is first powered up, the numerical display defaults to the last selected indication.

3) Touring Mode Indicator

When the TOURING mode indicator is ON, the default TOURING mode of operation is active.



TOURING MODE INDICATOR

Refer to *OPERATING MODES* subsection for detailed instructions.

4) Sport Mode Indicator

The sport mode indicator is normally off.

When sport mode of operation is selected, the SPORT mode indicator will come on and stay on until sport mode is deactivated, or the watercraft is shut down.



SPORT MODE INDICATOR

NOTE: Sport mode is not the default riding mode. To be active, it must be selected after starting the engine.

Refer to *OPERATING MODES* subsection for detailed instructions.

5) Fuel Level Indication

A bar gauge located in the bottom RH side of the multifunction display continuously indicates the amount of fuel in the fuel tank while riding.



FUEL LEVEL INDICATION

When the fuel tank is full, 8 segments (bars) of the indicator are turned on. The top segment is not used.

When there is only 2 segments of fuel indicated (approximately 25% fuel tank capacity or 14 L (3.7 U.S. gal.), the following warnings will be ON.

LOW FUEL LEVEL WARNING	
Last 2 fuel gauge segments	Flashing
Fuel tank symbol	
Audible warning (one long beep)	Periodically
Scrolling LOW FUEL WARNING message	

6) Hour Meter Display (HR)

Continuously displays the accumulated engine hours.



HOUR METER DISPLAY

7) Water Depth Display

The water depth display provides an indication of the lake water depth.

The system is capable of indicating water depth under the hull in single increments up to 50 m (164 ft).

NOTE: Under certain conditions, the display may stop indicating. The display's ability to provide and indication of the water's depth depends on the conditions of use.

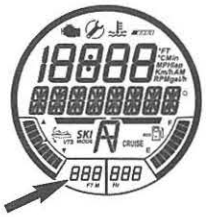

WATER DEPTH DISPLAY

NOTE: The water depth indication is only available when a depth sounder is installed and detected.

⚠ WARNING

Never use the depth sounder as a warning device to ride in shallow water.

8) Check Engine Light

The check engine light comes ON when a fault is detected by the engine management system.

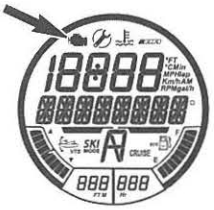

CHECK ENGINE LIGHT

When the check engine light comes on, contact your authorized Sea-Doo dealer.

9) Maintenance Reminder Indicator

The maintenance reminder indicator comes ON when required maintenance is due.



MAINTENANCE REMINDER INDICATOR

When this indicator comes on, bring your watercraft to your authorized Sea-Doo dealer to have it serviced and to have the maintenance reminder indicator reset.

10) High Temperature Indicator

The high temperature indicator comes ON when a high engine temperature or a high exhaust system temperature is detected.



HIGH TEMPERATURE INDICATOR

Refer to *TROUBLESHOOTING* subsection for details.

11) iBR Fault Indicator

The iBR fault indicator comes ON when a fault in the iBR system has been detected.



iBR FAULT INDICATOR

Refer to *TROUBLESHOOTING* subsection for details.

12) ECO Indicator

The ECO indicator and a smile in the fuel tank symbol comes ON when **FUEL ECONOMY MODE** is activated.



ECO MODE INDICATOR
(Fuel Economy Mode)

Refer to *OPERATING MODES* subsection for detailed instructions.

13) CRUISE Mode Indicator

The cruise mode indicator comes ON when:
- CRUISE MODE has been activated.
- SLOW SPEED MODE has been activated.



CRUISE MODE INDICATOR

Refer to *OPERATING MODES* subsection for detailed instructions.

14) iBR Position Indicator

Provides an indication of the iBR gate position.
- N (neutral)
- F (forward)
- R (reverse).



iBR POSITION INDICATOR

15) SKI MODE Indicator

The ski mode indicator is ON when SKI MODE is active.



SKI MODE INDICATOR

Refer to *OPERATING MODES* subsection for detailed instructions.

16) VTS Position Indication

The VTS position indication provides an indication of the pump nozzle position.

A single segment of a bar gauge type indicator is turned on to indicate the relative position of the watercraft bow.



VTS POSITION INDICATION

Refer to *OPERATING INSTRUCTIONS* subsection for detailed instructions.

Navigating the Multifunction Display

⚠ WARNING

Do not adjust display while riding, you could lose control.

Selecting Functions

When operating at speed, the multifunction display provides an indication of the compass direction and azimuth of the watercraft is traveling by default.

1. To select the various functions available through the multifunction display, press the MODE button repeatedly until the desired function is visible:
   - LAP TIMER
   - SKI MODE
   - FUEL ECONOMY MODE
   - FUEL CONSUMPTION
   - VTS MODE
   - DISPLAY
   - FAULT CODES
   - KEY MODE
   - SETTINGS.

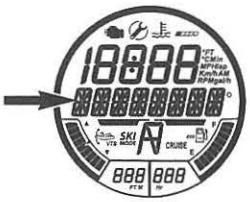

FUNCTION SUBMENU DISPLAYED IN SEQUENCE WHEN MODE BUTTON PRESSED REPEATEDLY

2. Then press the SET button to enter that function.

NOTE: The available functions and the order in which they appear depends on the watercraft model. The fault code function is only available when there is an active fault. The settings function is only available when the engine is shut off. The key mode function is only available with a normal key.

Function Description

Compass

A GPS incorporated in the information center provides the indication in the multifunction display.

The cardinal points, intermediate cardinal points, as well as the azimuth the watercraft is travelling are displayed in the multifunction display by default when the watercraft is moving.

For a compass indication to be displayed, the GPS must have a good link with the navigation satellites.

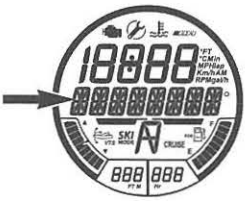

COMPASS DIRECTION DISPLAYED

NOTE: The compass indication is only available above 5 km/h (3 MPH).

⚠ WARNING

Use the compass as a guide only. Not to be used for precision navigation purposes.

Lap Timer

The lap timer can be used to record up to 50 individual lap times.

To activate and use the lap timer, carry out the following:

1. Press the MODE button repeatedly until LAP TIME is visible in the multifunction display.

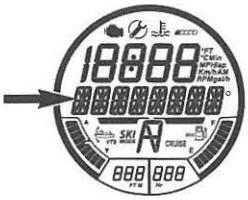

MESSAGE DISPLAYED

LAP TIME

2. Press the SET button to enter the function, the lap timer will be activated and visible in the display.



LAP TIMER FUNCTION

1. 00'00'00 lap time displayed here
2. Lap number "0" displayed here

3. To start the timer, press the SET button.

NOTE: The timer starts immediately when pressing the SET button.

4. To record each lap time, press the SET button at the start of each lap.

NOTE: The lap time will be recorded, the lap counter in the numerical display will count the number of laps recorded, and the timer will continue to run.



LAP TIMER FUNCTION EXAMPLE

1. 01'02'34 lap time displayed here
2. Lap number "1" displayed here

5. To save the last lap and stop the timer, press the MODE button.



LAP TIMER FUNCTION EXAMPLE

1. 01'21'03 lap time displayed here
2. Lap number "2" displayed here

To view each lap time, use the UP/DOWN button. The lap counter will indicate which lap is indicated.

To view the cumulative lap time of all laps recorded, use the UP/DOWN button until ALL is visible in the lap counter.

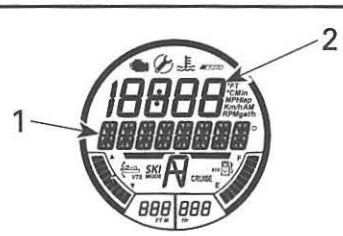

LAP TIMER FUNCTION EXAMPLE

1. Total lap times 02'23'37 displayed here
2. Lap count "ALL" displayed here

To reset the lap timer and lap counter, press and hold the SET button until the timer and counter are reset to 0 (zero).

Ski Mode

Ski mode is used for repeated controlled launches when towing a skier or wakeboarder. Refer to *OPERATING MODES* for more details.

ECO Mode

ECO mode is a function by which engine fuel consumption is reduced. Refer to *OPERATING MODES* subsection for detailed instructions.

Fuel Consumption

The FUEL CONSUMPTION function is used to display the watercraft fuel consumption four different ways:

- Instant fuel flow per hour (gal/h or L/h)
- Average fuel flow per hour (gal/h or L/h)
- Distance to empty (Mi or Km)
- Time to empty (h or min).

The fuel consumption functions are not continuously active.

The fuel consumption function selected becomes active only when selected as the indication in the numerical display.

When the LOW FUEL indications come on in the multifunction gauge, the "TIME TO EMPTY" and "DISTANCE TO EMPTY" functions will indicate "0" (zero) if they are the selected indication.

To display the watercraft fuel consumption, carry out the following:

1. Press the MODE button repeatedly until FUEL CONSUMPTION is visible in the multifunction display.

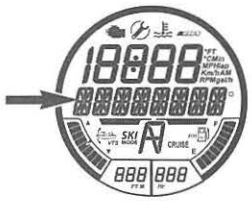

MESSAGE DISPLAYED
FUEL CONSUMPTION

2. Press the UP/DOWN button to toggle to the desired fuel consumption display mode.



FUEL CONSUMPTION DISPLAY MODE
1. INSTANT FUEL CONSUMPTION message 2. Applicable value

3. Press the SET button to save the setting and return to the main display.

NOTE: The fuel consumption value selected will be displayed in the numerical display. Double click the SET button to reset the average fuel consumption indication. The display will momentarily indicate zero (0).

VTS Mode

The VTS MODE function is used to manually set the VTS or change VTS PRESET settings.

Refer to *OPERATING INSTRUCTIONS* subsection for detailed instructions.

Display

The DISPLAY function is used to change the indication in the numerical display. Refer to *CHANGING NUMERICAL DISPLAY INDICATION*.

Fault Codes

The FAULT CODES function is used to display active fault codes.

Refer to *MONITORING SYSTEM* subsection for details.

Key Mode

The KEY MODE function is used for changing LEARNING key settings.

Refer to *OPERATING MODES* subsection for detailed instructions.

Settings

The SETTINGS function is used for:

- Changing the clock setting, refer to *MULTIFUNCTION GAUGE SETUP*.
- Activating the iBR override function, refer to *SPECIAL PROCEDURES*.

Multifunction Display Messages

For a list of usual messages that may be displayed in the multifunction display, refer to *MULTIFUNCTION DISPLAY MESSAGES* in this section.

Changing Numerical Display Indication

To change the indication in the numerical display, carry out the following:

1. Press the MODE button on the RH handlebar repeatedly until DISPLAY is visible in the multifunction display.

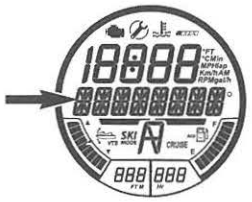

MESSAGE DISPLAYED
DISPLAY

2. Press the SET button to enter the DISPLAY function.
3. Press the UP/DOWN button until the preferred indication is visible in the multifunction display (as applicable to model).
   - RPM
   - SPEED

- CLOCK
- ENGINE TEMP
- ALTITUDE
- TOP SPEED
- AVG SPEED
- TOP RPM
- AVG RPM.



NUMERICAL DISPLAY SELECTION

1. Type of selected numerical display indication
2. Applicable value

4. Press the SET button to select and save the preferred indication, or wait for the display function to time out. The last indication visible will be automatically saved.

Resetting Numerical Display Indication

The following numerical display indications can be reset when selected:

- Average fuel consumption
- Top speed
- Average speed
- Top RPM
- Average RPM.

To reset the indication. double click the SET button. The numerical display will momentarily indicate zero (0).

NOTE: Each of these functions become active **ONLY** when selected as the numerical display indication.

Multifunction Gauge Setup

Clock Setting

1. Press the MODE button repeatedly until SETTINGS is visible in the multifunction display.

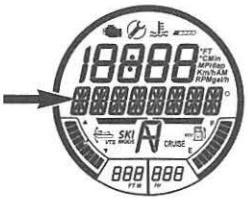

MESSAGE DISPLAYED

SETTINGS

2. Press the UP/DOWN button repeatedly until CLOCK is visible.



FUNCTION SELECTED - CLOCK

1. CLOCK indication
2. Time

3. Press the SET button to enter the function. CHANGE CLOCK OFFSET message will be displayed.



FUNCTION SELECTED - CHANGE CLOCK OFFSET

1. CHANGE CLOCK OFFSET indication
2. Time

4. Press the UP/DOWN button to adjust the clock to the correct local time.
5. Press the SET button to save the setting and return to the main display.

NOTE: The clock uses the GPS signal to maintain the appropriate time referenced to Greenwich Mean Time (GMT). When setting the clock, only the hour indication may be changed.

Units of Measurement and Language Setting

The multifunction gauge is capable of displaying information in metric or imperial units and in various languages.

To change the units of measurement or to change the language displayed in the multifunction gauge, see your authorized Sea-Doo dealer.

INFORMATION CENTER (GTX, RXT, WAKE PRO)

⚠ WARNING

Do not adjust the display while riding, you could lose control.

Information Center Description

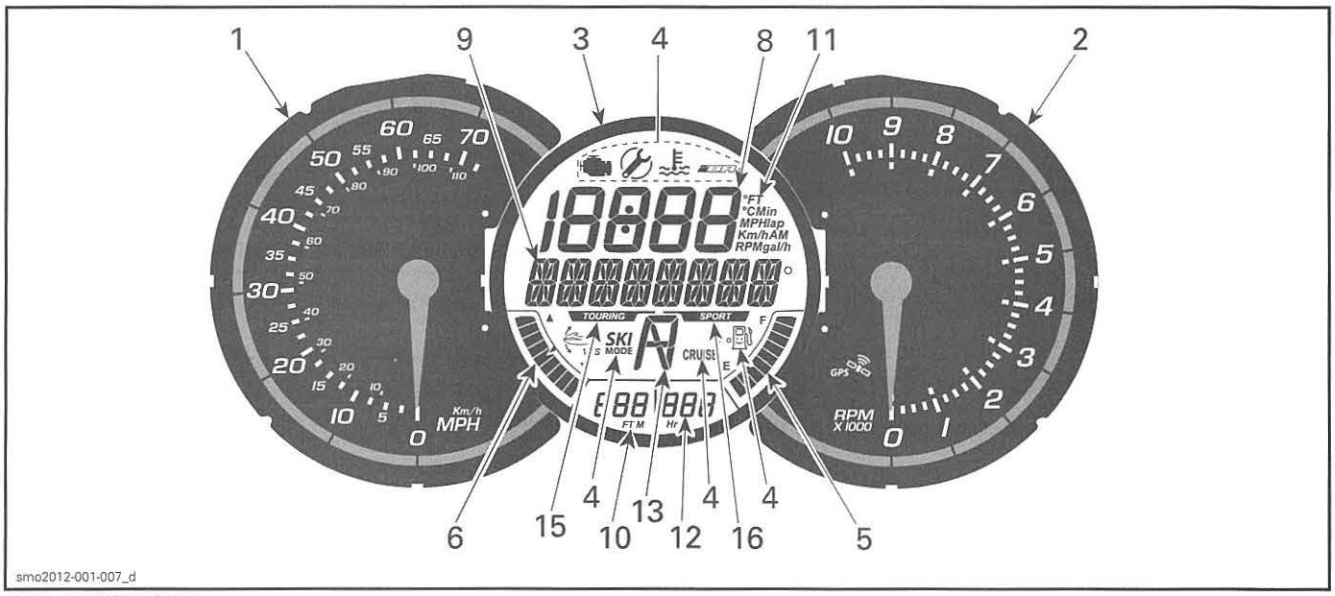

GTX 155/GTX S 155

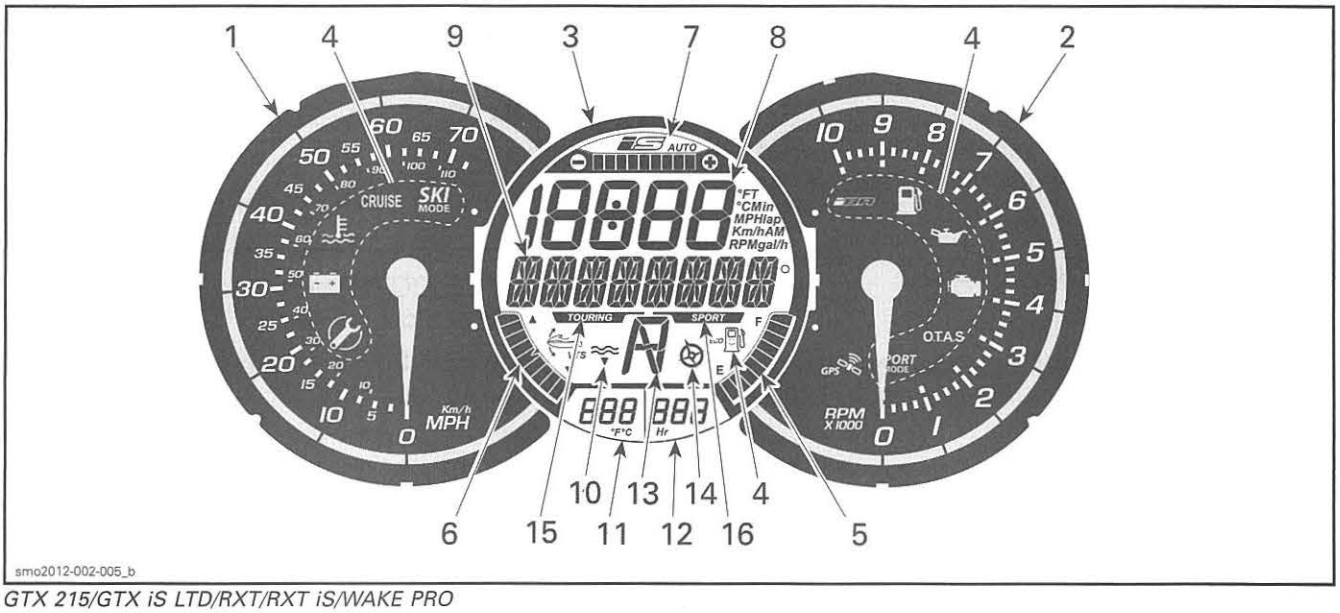

GTX 215/GTX iS LTD/RXT/RXT iS/WAKE PRO

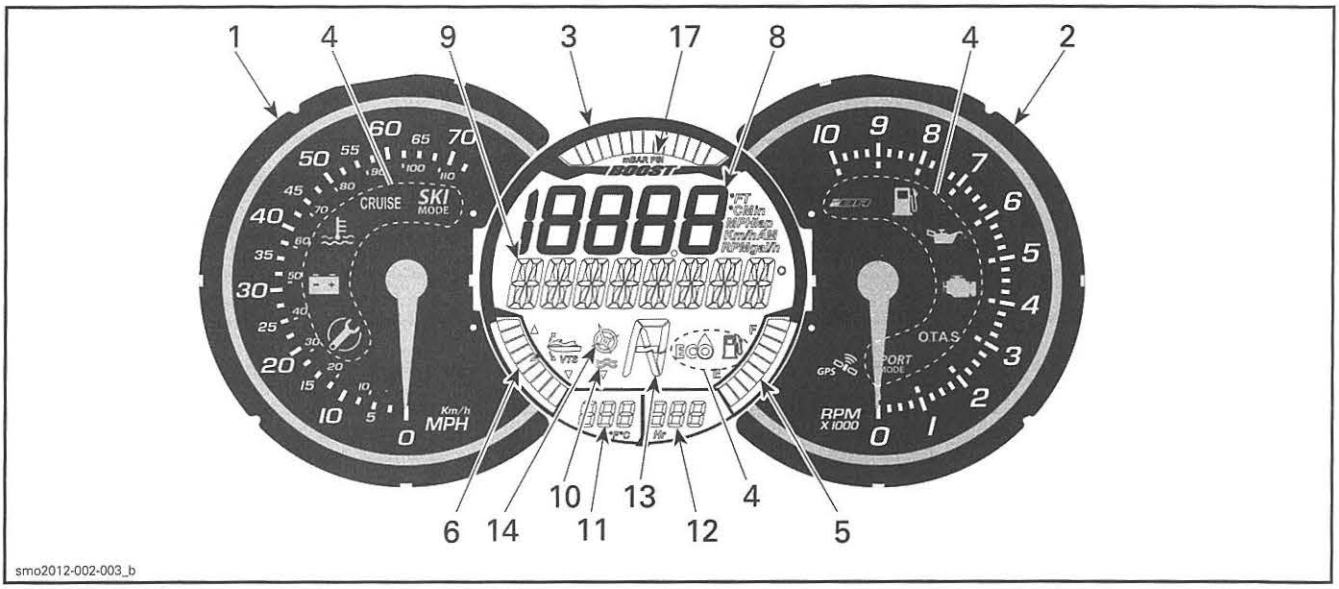

smo2012-002-003_b

RXT-X/RXT-X aS

1) Speedometer

The speedometer, located in the LH side of the information center, provides an analog indication of the speed of the watercraft in miles per hour (MPH) and kilometers per hour (km/h).

The speed indication is based on a GPS (Global Positioning System) incorporated within the information center.

If for some reason the GPS signal is lost, a default mode is used whereby, the speed is calculated using information received from other systems to provide an estimated watercraft speed.

2) Tachometer

The tachometer provides an analog indication of the revolutions per minute (RPM) of the engine. Multiply the indicated number by 1000 to obtain the actual engine RPM.

3) Multifunction Gauge

The multifunction gauge, located in the center of the information center, is capable of displaying different indications simultaneously.

Numerical and multifunction displays in the digital screen indicator can be used to display various indications, or for selecting modes of operation and changing settings as explained in their respective sections.

Multifunction Gauge Features

	GTX 155 GTX S 155	GTX LTD iS	RXT iS	GTX 215	RXT	RXT-X/ RXT-X aS	WAKE PRO
TOURING mode indicator	X	X	X	X	X	N.A.	X
SPORT mode indicator	X	X	X	X	X	N.A.	X
Fuel level indication	X	X	X	X	X	X	X
Hour meter display	X	X	X	X	X	X	X
Water depth indication	Opt	X	Opt	Opt	Opt	Opt	Opt
ECO mode indicator	X	X	X	X	X	X	X
CRUISE mode indicator	X	N.A.	N.A.	N.A.	N.A.	N.A.	N.A.
iBR position indicator	X	X	X	X	X	X	X
SKI mode indicator	Opt	N.A.	N.A.	N.A.	N.A.	N.A.	N.A.
VTS position indication	X	X	X	X	X	X	X
Boost gauge	N.A.	N.A.	N.A.	N.A.	N.A.	X	N.A.
iS indicator	N.A.	X	X	N.A.	N.A.	N.A.	N.A.

X = Indicates a standard feature
Opt = Feature available as an option
N.A. = Not Available or Not Active

4) Indicator Lights

Indicator lights (pilot lamps), inform you of a selected function or a system anomaly.

An indicator light may be accompanied by a scrolling message in the multifunction display.

See the following table for information on the usual pilot lamps. Refer to *MONITORING SYSTEM* for details on malfunction pilot lamps.

PILOT LAMPS (ON)	MESSAGE DISPLAY	DESCRIPTION
ALL MODELS EXCEPT GTX 155/GTX S 155		
	MAINTENANCE REMINDER	Maintenance required. Bring your watercraft to your Sea-Doo dealer to have it serviced and to have the maintenance required indicator reset.
	LOW-FUEL	Low fuel level, approx. 25% tank capacity, 14 L (3.7 U.S. gal.) or fuel level sensor disconnected.
	Scrolling SLOW SPEED MODE message	CRUISE mode or SLOW SPEED MODE engaged. Refer to *OPERATING MODES* subsection.
	Scrolling SKI MODE messages	Ski Mode activated. Refer to *OPERATING MODES* subsection.
	Scrolling SPORT MODE messages	Sport Mode activated. Refer to *OPERATING MODES* subsection.

5) Fuel Level Indication

A bar gauge located in the bottom RH side of the multifunction display continuously indicates the amount of fuel in the fuel tank while riding.



FUEL LEVEL INDICATION

When the fuel tank is full, 8 segments (bars) of the indicator are turned on. The top segment is not used.

Low Fuel Level Warning

It is active when there is only 2 segments of fuel indicated (approximately 25% fuel tank capacity or 14 L (3.7 U.S. gal.).

All Models Except GTX 155 and GTX S 155

LOW FUEL LEVEL WARNING	
Last 2 fuel gauge segments	ON
Fuel tank symbol (LED)	
Audible warning (one long beep)	Periodically
Scrolling LOW FUEL WARNING message	

GTX 155 and GTX S 155 Models

LOW FUEL LEVEL WARNING	
Last 2 fuel gauge segments	Flashing
Fuel tank symbol (LCD)	
Audible warning (one long beep)	Periodically
Scrolling LOW FUEL WARNING message	

6) VTS Position

The VTS position indication located in the bottom LH side of the digital screen shows the riding attitude of the watercraft.

A single segment of a bar gauge type indicator is turned on to indicate the relative position of the watercraft bow.



VTS POSITION INDICATION

Refer to *OPERATING INSTRUCTIONS* for more details on using the VTS.

7) iS Position

GTX Ltd iS and RXT iS

The iS display (intelligent Suspension) provides a visual indication of the relative height of the suspension.

It also indicates if the suspension is in AUTO mode of operation.



1. iS position indicator
2. iS AUTO mode indicator

When the suspension system is operating in AUTO mode, the AUTO indicator and all bar segments of the position indicator will be on.

When the suspension height is adjusted manually using the UP/DOWN buttons (while in IS mode), the system switches to MANUAL mode of operation. The AUTO indication disappears and only one bar segment of the position indicator will be on.

Refer to *OPERATING INSTRUCTIONS* for more information on using the suspension.

8) Numerical Display

The numerical display is used to provide a variety of indications as selected by the operator using the DISPLAY function in the multifunction display.

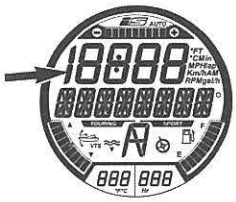

NUMERICAL DISPLAY

The available indications are dependent on the watercraft model or option installed.

AVAILABLE INDICATIONS IN NUMERICAL DISPLAY	GTX 155, GTX S 155	GTX 215	GTX LTD iS	RXT iS	RXT	RXT-X aS, RXT-X	WAKE PRO
Watercraft speed	Indication by default						
Engine RPM	X	X	X	X	X	X	X
Engine temperature	Opt	Opt	Opt	Opt	Opt	X	Opt
Lake water temperature	N.A.	X	X	X	X	X	X
Clock	X	X	X	X	X	X	X
Learning key settings	X	X	X	X	X	X	X
CRUISE SPEED setting	X	X	X	X	X	Opt	X
SLOW SPEED MODE setting	X	X	X	X	X	Opt	X
VTS preset	Opt	Opt	X	X	X	X	X
VTS settings (through gauge)	X	X	N.A.	N.A.	N.A.	N.A.	N.A.
SKI MODE settings	Opt	Opt	Opt	Opt	Opt	Opt	X
Fuel consumption (instant and average)	X	X	X	X	X	X	X
Fuel autonomy (distance and time to empty)	Opt	Opt	X	Opt	Opt	X	Opt
Lap timer	Opt	Opt	Opt	Opt	Opt	X	Opt
Top speed/RPM Average speed/RPM	Opt	Opt	Opt	Opt	Opt	X	Opt
Altitude	N.A.	N.A.	X	N.A.	N.A.	N.A.	N.A.

X = An X indicates a **standard** feature
Opt = Feature available as an **option**
N.A. = Not Available

When the information center is first powered up, the numerical display defaults to the last selected indication.

9) Multifunction Display

The multifunction display is used to:

- Display the WELCOME message on power up.
- Display the KEY recognition message.
- Provide various indications as selected by the operator.
- Activating and setting various functions and modes of operation.
- Display scrolling messages of function activation or system faults.
- Display fault codes.

NOTE: The default indication in the multifunction display is the compass direction.

10) Water Depth Display

The water depth display provides an indication of the lake water depth.

The system is capable of indicating water depth under the hull in single increments up to 50 m (164 ft).

NOTE: Under certain conditions, the display may stop indicating. The display ability to provide an indication of the water depth depends on the conditions of use.

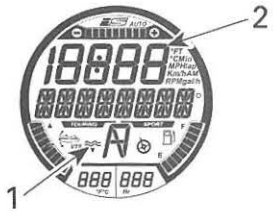

WATER DEPTH DISPLAY

1. Depth finder indicator
2. Water depth indication

NOTE: The water depth indication is only available when a depth sounder is installed and detected.

⚠ WARNING

Never use the depth sounder as a warning device to ride in shallow water.

11) Water Temperature Display

Continuously displays surface water temperature.

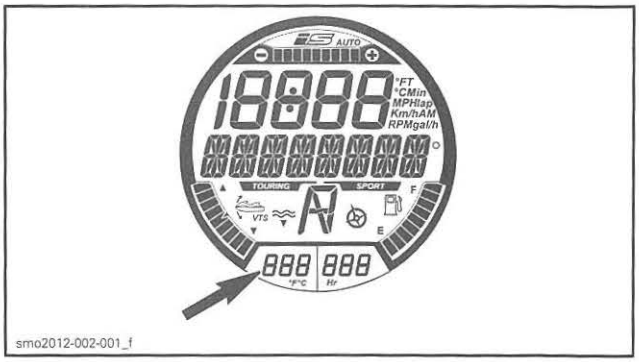

The numerical display may also be selected to display water temperature. See *NUMERICAL DISPLAY* in this section.

To change the unit of measurement (°C or °F), see your authorized Sea-Doo dealer.

12) Hour Meter Display (HR)

Continuously displays the accumulated engine hours.

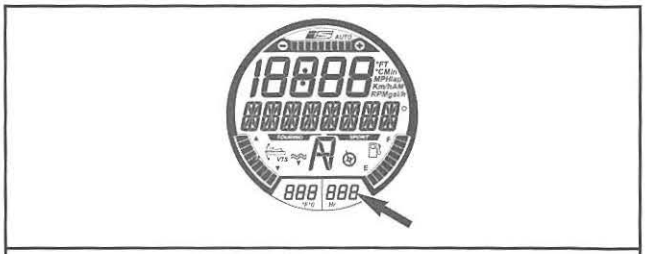

HOUR METER DISPLAY

13) iBR Position

Provides an indication of the iBR gate position.

- N (neutral)
- F (forward)
- R (reverse).

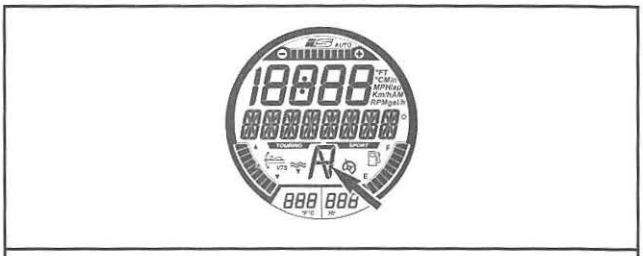

iBR POSITION INDICATOR

14) Compass

A GPS incorporated in the information center provides the indication in the multifunction display.

The cardinal points, intermediate cardinal points, as well as the azimuth the watercraft is travelling are displayed in the multifunction display by default when the watercraft is moving.

For a compass indication to be displayed, the GPS must have a good link with the navigation satellites.

This is confirmed when the COMPASS active indicator is visible in the digital screen.



COMPASS (GAUGE WITHOUT BOOST GAUGE)

1. Compass indication
2. Compass active indicator

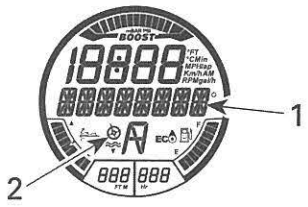

COMPASS (GAUGE WITH BOOST GAUGE)

1. Compass indication
2. Compass active indicator

NOTE: The compass indication is only available above 5 km/h (3 MPH).

⚠ WARNING

Use the compass as a guide only. Not to be used for precision navigation purposes.

15) Touring Mode Indicator

All Models Except RXT-X/RXT-X aS.

When the TOURING mode indicator is ON, the default TOURING mode is active.



TOURING MODE INDICATOR

For more information on the touring mode, refer to *OPERATING MODES* subsection.

16) Sport Mode Indicator



SPORT MODE INDICATOR (GAUGE WITHOUT BOOST GAUGE)

When sport mode of operation is selected, the sport mode indicator will come on and stay on until sport mode is deactivated, or the watercraft is shut down.

NOTE: The sport mode is not the default riding mode. To be active, it must be selected after starting the engine.

For instructions on how to engage sport mode, refer to *OPERATING MODES* subsection.

GTX LTD iS/RXT/RXT iS/WAKE PRO

In addition to the sport mode indicator in the multifunction display, a SPORT MODE indicator light turns ON in the tachometer.

RXT-X/RXT-X aS

There is no sport mode indicator in the multifunction display, only a SPORT MODE indicator light turns ON in the tachometer.

17) Boost Gauge



BOOST INDICATOR

The boost gauge indicates the manifold pressure of the engine provided by the supercharger.

Navigating the Multifunction Display

When the electrical system is powered up and the cluster has completed its self test function, a WELCOME ABOARD SEA-DOO scrolling message will appear for a few seconds. After the welcome message, nothing will appear in the display until the watercraft is operated.

When the watercraft is being operated, the multifunction display provides an indication of compass heading or scrolling messages from the monitoring system.

The multifunction display is also used to display a menu for the selection of various functions which, permit changing the numerical display indication, system modes of operation, settings, active system fault codes, and a lap timer.

⚠ WARNING

Selecting various numerical displays, system modes of operation or changing settings should only be carried out with the watercraft stopped. Selecting these various functions while operating the watercraft at speed is not recommended as it deters your attention from situational awareness.



MULTIFUNCTION DISPLAY

NOTE: To change the unit of measurement or the language displayed, see your authorized Sea-Doo dealer.

Selecting Functions

When operating at speed, the multifunction display normally provides an indication of the compass direction and azimuth the watercraft is traveling.

To select the various functions available through the multifunction display, press the MODE button repeatedly until the desired function is visible:
- LAP TIME
- SKI MODE
- LAP TIME
- FUEL CONSUMPTION
- VTS MODE
- DISPLAY
- FAULT CODES
- KEY MODE
- SETTINGS.

Then press the SET button to enter that function.

NOTE: The fault code function is only available when there is an active fault. The settings and key mode functions are only available when the engine is shut off. The key mode function is only available with a normal key.

Function Description

Lap Timer

The lap timer can be used to record up to 50 individual lap times.

To activate and use the lap timer, carry out the following:

1. Press the MODE button repeatedly until LAP TIME is visible in the multifunction display.

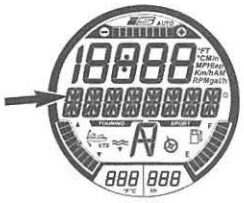

MESSAGE DISPLAYED

LAP TIME

2. Press the SET button to enter the function, the lap timer will be activated and visible in the display.



FUNCTION SELECTED: LAP TIMER

1. Lap time
2. Lap count

3. To start the timer, press the SET button.

NOTE: The timer starts immediately when pressing the SET button.

4. To record each lap time, press the SET button at the start of each lap.

NOTE: The lap time will be recorded, the lap counter in the numerical display will count the number of laps recorded, and the timer will continue to run.

5. To save the last lap and stop the timer, press the MODE button.

To view each lap time, use the UP or DOWN button. The lap counter will indicate which lap is indicated.

To view the cumulative lap time of all laps recorded, use the UP or DOWN button until ALL is visible in the lap counter.



MESSAGE DISPLAYED: LAP TIMER

1. Total time
2. ALL is displayed here

To reset the lap timer and lap counter, press and hold the SET button until the timer and counter are reset to 0 (zero).

Ski Mode

Ski mode is used for repeated controlled launches when towing a skier or wakeboarder. Refer to *OPERATING MODES* for more details.

Fuel Consumption

The FUEL CONSUMPTION function is used to display the watercrafts fuel consumption in four different ways.

- Instant fuel flow per hour (gal/h or l/h)
- Average fuel flow per hour (gal/h or l/h)
- Distance to empty (Mi or Km)
- Time to empty (h or min).

The fuel consumption functions are not continuously active.

A fuel consumption function becomes active only when selected as the indication in the numerical display.

When the LOW FUEL indications come on in the multifunction gauge, the "TIME TO EMPTY" and "DISTANCE TO EMPTY" functions will indicate "0" (zero) if they are the selected indication.

To display the watercraft fuel consumption, carry out the following:

1. Press the MODE button repeatedly until FUEL CONSUMPTION is visible in the multifunction display.

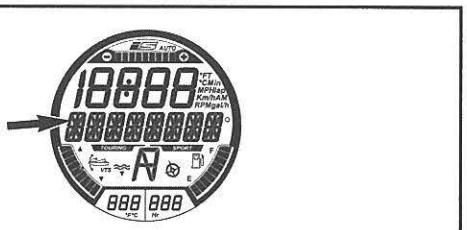

MESSAGE DISPLAYED

FUEL CONSUMPTION

2. Press the UP or DOWN button to toggle to the desired fuel consumption display mode.

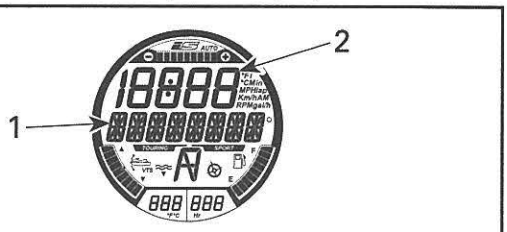

FUEL CONSUMPTION DISPLAY MODE

1. INSTANT FUEL CONSUMPTION message
2. Fuel consumption value

3. Press the SET button to save the setting and return to the main display.

NOTE: The fuel consumption value will be displayed in the numerical display. Double click the SET button to reset the average fuel consumption indication. The display will momentarily indicate zero (0).

VTS Mode

The VTS MODE function is used to manually set the VTS or change VTS PRESET settings. Refer to *OPERATING INSTRUCTIONS* subsection for details.

Display

The DISPLAY function is used to change the indication in the numerical display. Refer to *CHANGING NUMERICAL DISPLAY INDICATION.*

Fault Codes

The FAULT CODES function is used to display active fault codes. Refer to *MONITORING SYSTEM* subsection.

Key Mode

The KEY MODE function is used for changing LEARNING key settings. Refer to *OPERATING MODES* subsection for details.

Settings

The SETTINGS function is used for:

- Clock setting. Refer to *MULTIFUNCTION GAUGE SETUP*
- Dock mode setting. Refer to iS (INTELLIGENT SUSPENSION) in the *SUSPENSIONS* subsection
- iBR override function for maintenance.

Changing Numerical Display Indication

To change the indication in the numerical display, carry out the following:

1. Press the MODE button on the RH handlebar repeatedly until DISPLAY is visible in the multifunction display.



MESSAGE DISPLAYED

DISPLAY

2. Press the SET button to enter the DISPLAY function.
3. Press the UP or DOWN button until the preferred available indication appears.
   - RPM
   - SPEED
   - LAKE TEMPERATURE
   - DEPTH
   - ENGINE TEMP
   - ALTITUDE
   - TOP SPEED
   - AVG SPEED
   - TOP RPM
   - AVG RPM
   - CLOCK.



NUMERICAL DISPLAY SELECTION

1. Type of selected numerical display indication
2. Applicable value

4. Press the SET button to select and save the preferred indication, or wait for the display function to time out. The last indication visible will be automatically saved.

The following abbreviations are used in the numerical display:

- FT or M
- RPM
- MPH or Km/h
- °F or °C
- AM or PM
- Gal/h or l/h.

Resetting Numerical Display Indication

The following numerical display indications can be reset:

- Average fuel consumption
- Top speed
- Average speed
- Top RPM
- Average RPM.

To reset indications, double click the SET button. The numerical display will momentarily indicate zero (0).

NOTE: Each of these functions become active ONLY when selected as the numerical display indication.

Multifunction Gauge Setup

Changing Clock Setting

1. Press the MODE button repeatedly until SETTINGS is visible in the multifunction display.

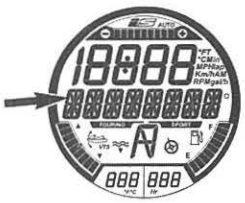

MESSAGE DISPLAYED

SETTINGS

2. Press the UP or DOWN button repeatedly until CLOCK is visible.



FUNCTION SELECTED - CLOCK

1. CLOCK message
2. Time

3. Press the SET button to enter the function. CHANGE CLOCK OFFSET message will be displayed.



FUNCTION SELECTED - CHANGE CLOCK OFFSET

1. CHANGE CLOCK OFFSET message
2. Time

4. Press the UP or DOWN button to adjust the clock to the correct local time.
5. Press the SET button to save the setting and return to the main display.

NOTE: The clock uses the GPS signal to maintain the appropriate time referenced to Greenwich Mean Time (GMT). When setting the clock, only the hour indication may be changed.

Units of Measurement and Language Setting

The multifunction gauge is capable of displaying information in metric or imperial units and in various languages.

To change the units of measurement or to change the language displayed in the multifunction gauge, see your authorized Sea-Doo dealer.

Multifunction Display Messages

For a list of usual messages that may be displayed in the multifunction display, refer to *MULTIFUNCTION DISPLAY MESSAGES* in this section.

INFORMATION CENTER (RXP-X)

⚠ WARNING

Do not adjust the display while riding, you could lose control.

Information Center Description

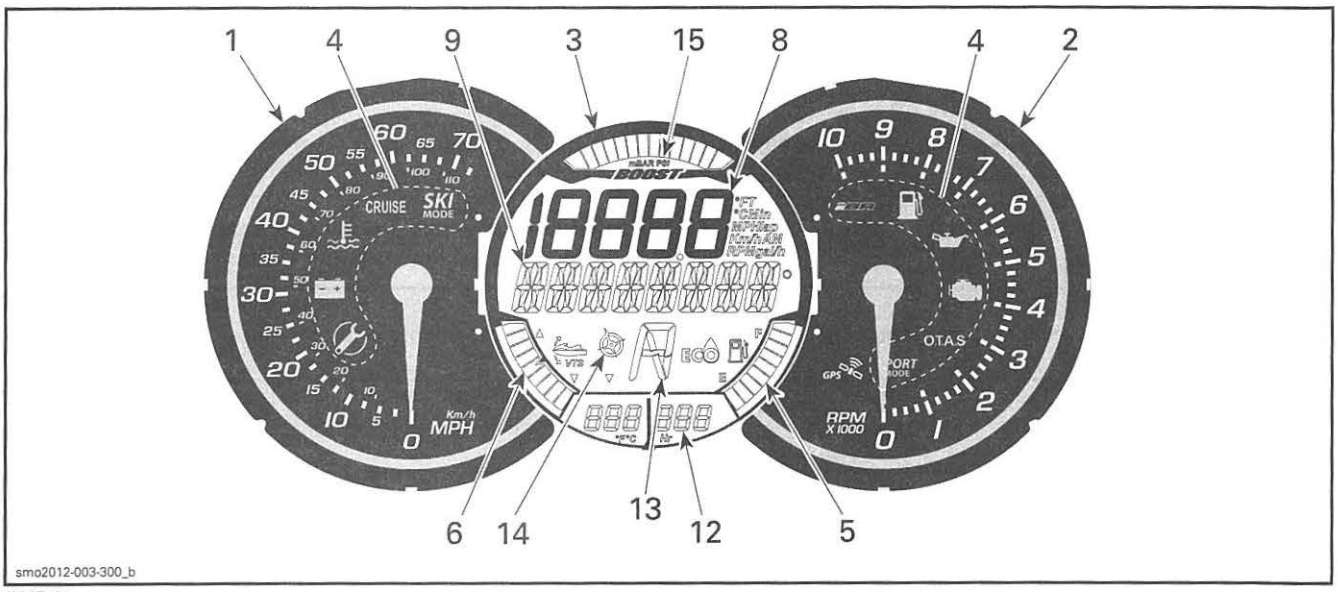

RXP-X

1) Speedometer

The speedometer, located in the LH side of the information center, provides an analog indication of the speed of the watercraft in miles per hour (MPH) and kilometers per hour (km/h).

The speed indication is based on a GPS (Global Positioning System) incorporated within the information center.

If for some reason the GPS signal is lost, a default mode is used whereby, the speed is calculated using information received from other systems to provide an estimated watercraft speed.

2) Tachometer

The tachometer provides an analog indication of the revolutions per minute (RPM) of the engine. Multiply the indicated number by 1000 to obtain the actual engine RPM.

3) Multifunction Gauge

The multifunction gauge, located in the center of the information center, is capable of displaying different indications simultaneously.

Numerical and multifunction displays in the digital screen indicator can be used to display various indications, or for selecting modes of operation and changing settings as explained in their respective sections.

Multifunction Gauge Features

	RXP-X
Fuel level indication	X
Hour meter display	X
Water depth indication	Opt
ECO mode indicator	X
VTS position indication	X
Compass	X
Boost Gauge	X
X = An X indicates a **standard** feature Opt = Feature available as an **option**	

4) Indicator Lights

Indicator lights (pilot lamps), inform you of a selected function or a system anomaly.

An indicator light may be accompanied by a scrolling message in the multifunction display.

See the following table for information on the usual pilot lamps. Refer to *MONITORING SYSTEM* for details on malfunction pilot lamps.

PILOT LAMPS (ON)	MESSAGE DISPLAY	DESCRIPTION
	MAINTENANCE REMINDER	Maintenance required. Bring your watercraft to your Sea-Doo dealer to have it serviced and to have the maintenance required indicator reset.
	LOW-FUEL	Low fuel level, approx. 25% tank capacity, 14 L (3.7 U.S. gal.) or fuel level sensor disconnected.
CRUISE	No message	Feature not active on this model.
SKI MODE	No message	Feature not active on this model.
SPORT MODE	Scrolling SPORT MODE messages	Sport Mode activated. Refer to *OPERATING MODES* subsection.

5) Fuel Level Indication

A bar gauge located in the bottom RH side of the multifunction display continuously indicates the amount of fuel in the fuel tank while riding.



FUEL LEVEL INDICATION

When the fuel tank is full, 8 segments (bars) of the indicator are turned on. The top segment is not used.

Low Fuel Level Warning

It is active when there is only 2 segments of fuel indicated (approximately 25% fuel tank capacity or 14 L (3.7 U.S. gal.).

LOW FUEL LEVEL WARNING	
Last 2 fuel gauge segments	Flashing
Fuel tank symbol (LCD)	
Audible warning (one long beep)	Periodically
Scrolling LOW FUEL WARNING message	

6) VTS Position

The VTS position indication located in the bottom LH side of the digital screen shows the riding attitude of the watercraft.

A single segment of a bar gauge type indicator is turned on to indicate the relative position of the watercraft bow.



VTS POSITION INDICATION

Refer to *OPERATING INSTRUCTIONS* for more details on using the VTS.

7) iS Position

Not available for this model.

8) Numerical Display

The numerical display is used to provide a variety of indications as selected by the operator using the DISPLAY function in the multifunction display.



NUMERICAL DISPLAY

The available indications are dependent on the watercraft model or option installed.

AVAILABLE INDICATIONS IN NUMERICAL DISPLAY	RXP-X
Watercraft speed	Indication by default
Engine RPM	X
Engine temperature	X
Lake water temperature	N.A.
Clock	X
Learning key settings	X
CRUISE SPEED setting	Opt
SLOW SPEED MODE setting	Opt
VTS preset	X
VTS settings (through gauge)	N.A.
SKI MODE settings	N.A.
Fuel consumption (instant and average)	X
Fuel autonomy (distance and time to empty)	X
Lap timer	X
Top speed/RPM Average speed/RPM	X
Altitude	N.A.
X = An X indicates a **standard** feature Opt = Feature available as an **option** N.A. = Not Available	

When the information center is first powered up, the numerical display defaults to the last selected indication.

9) Multifunction Display

The multifunction display is used to:
- Display the WELCOME message on power up.
- Display the KEY recognition message.
- Provide various indications as selected by the operator.
- Activating and setting various functions and modes of operation.
- Display scrolling messages of function activation or system faults.
- Display fault codes.

NOTE: The default indication in the multifunction display is the compass direction.

10) Water Depth Display

Not available for this model.

11) Water Temperature Display

Not available for this model.

12) Hour Meter Display (HR)

Continuously displays the accumulated engine hours.



HOUR METER DISPLAY

13) iBR Position

Provides an indication of the iBR gate position.
- N (neutral)
- F (forward)
- R (reverse).



iBR POSITION INDICATOR

14) Compass

A GPS incorporated in the information center provides the indication in the multifunction display.

The cardinal points, intermediate cardinal points, as well as the azimuth the watercraft is travelling are displayed in the multifunction display by default when the watercraft is moving.

For a compass indication to be displayed, the GPS must have a good link with the navigation satellites.

This is confirmed when the COMPASS active indicator is visible in the digital screen.

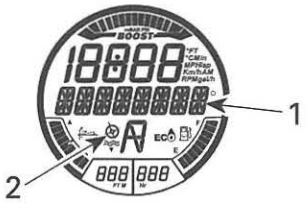

COMPASS

1. Compass indication
2. Compass active indicator

NOTE: The compass indication is only available above 5 km/h (3 MPH).

⚠ WARNING

Use the compass as a guide only. Not to be used for precision navigation purposes.

15) Boost Gauge



BOOST INDICATOR

The boost gauge indicates the manifold pressure of the engine provided by the supercharger.

Navigating the Multifunction Display

When the electrical system is powered up and the cluster has completed its self test function, a WELCOME ABOARD SEA-DOO scrolling message will appear for a few seconds. After the welcome message, nothing will appear in the display until the watercraft is operated.

When the watercraft is being operated, the multifunction display provides an indication of compass heading or scrolling messages from the monitoring system.

The multifunction display is also used to display a menu for the selection of various functions which, permit changing the numerical display indication, system modes of operation, settings, active system fault codes, and a lap timer.

⚠ WARNING

Selecting various numerical displays, system modes of operation or changing settings should only be carried out with the watercraft stopped. Selecting these various functions while operating the watercraft at speed is not recommended as it deters your attention from situational awareness.

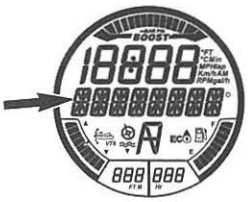

MULTIFUNCTION DISPLAY

NOTE: To change the unit of measurement or the language displayed, see your authorized Sea-Doo dealer.

Selecting Functions

When operating at speed, the multifunction display normally provides an indication of the compass direction and azimuth the watercraft is traveling.

To select the various functions available through the multifunction display, press the MODE button repeatedly until the desired function is visible:

- LAP TIME
- FUEL CONSUMPTION
- VTS MODE
- DISPLAY
- FAULT CODES
- KEY MODE
- SETTINGS.

Then press the SET button to enter that function.

NOTE: The fault code function is only available when there is an active fault. The settings function is only available when the engine is shut off. The key mode function is only available with a normal key.

Function Description

Lap Timer

The lap timer can be used to record up to 50 individual lap times.

To activate and use the lap timer, carry out the following:

1. Press the MODE button repeatedly until LAP TIME is visible in the multifunction display.

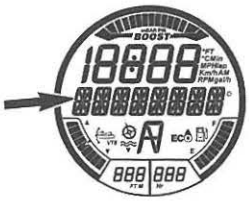

MESSAGE DISPLAYED
LAP TIME

2. Press the SET button to enter the function, the lap timer will be activated and visible in the display.

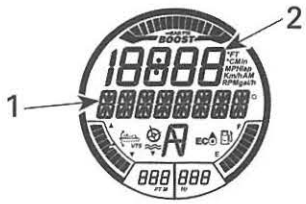

FUNCTION SELECTED: LAP TIMER
1. Lap time 2. Lap count

3. To start the timer, press the SET button.

NOTE: The timer starts immediately when pressing the SET button.

4. To record each lap time, press the SET button at the start of each lap.

NOTE: The lap time will be recorded, the lap counter in the numerical display will count the number of laps recorded, and the timer will continue to run.

5. To save the last lap and stop the timer, press the MODE button.

To view each lap time, use the UP or DOWN button. The lap counter will indicate which lap is indicated.

To view the cumulative lap time of all laps recorded, use the UP or DOWN button until ALL is visible in the lap counter.

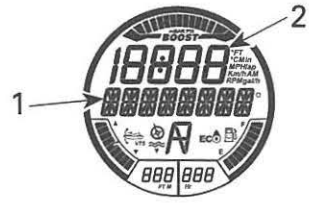

MESSAGE DISPLAYED: LAP TIMER
1. Total time 2. ALL is displayed here

To reset the lap timer and lap counter, press and hold the SET button until the timer and counter are reset to 0 (zero).

Fuel Consumption

The FUEL CONSUMPTION function is used to display the watercrafts fuel consumption in four different ways.

- Instant fuel flow per hour (gal/h or l/h)
- Average fuel flow per hour (gal/h or l/h)
- Distance to empty (Mi or Km)
- Time to empty (h or min).

The fuel consumption functions are not continuously active.

A fuel consumption function becomes active only when selected as the indication in the numerical display.

When the LOW FUEL indications come on in the multifunction gauge, the "TIME TO EMPTY" and "DISTANCE TO EMPTY" functions will indicate "0" (zero) if they are the selected indication.

To display the watercraft fuel consumption, carry out the following:

1. Press the MODE button repeatedly until FUEL CONSUMPTION is visible in the multifunction display.

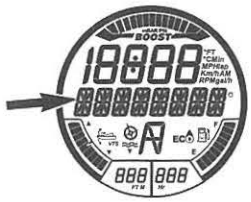

MESSAGE DISPLAYED
FUEL CONSUMPTION

2. Press the UP or DOWN button to toggle to the desired fuel consumption display mode.

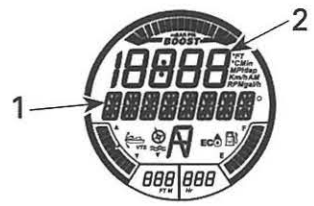

FUEL CONSUMPTION DISPLAY MODE

1. INSTANT FUEL CONSUMPTION message
2. Fuel consumption value

3. Press the SET button to save the setting and return to the main display.

NOTE: The fuel consumption value will be displayed in the numerical display. Double click the SET button to reset the average fuel consumption indication. The display will momentarily indicate zero (0).

VTS Mode

The VTS MODE function is used to manually set the VTS or change VTS PRESET settings. Refer to *OPERATING INSTRUCTIONS* subsection for details.

Display

The DISPLAY function is used to change the indication in the numerical display. Refer to *CHANGING NUMERICAL DISPLAY INDICATION.*

Fault Codes

The FAULT CODES function is used to display active fault codes. Refer to *MONITORING SYSTEM* subsection.

Key Mode

The KEY MODE function is used for changing LEARNING key settings. Refer to *OPERATING MODES* subsection for details.

Settings

The SETTINGS function is used for:

- Clock setting. Refer to *MULTIFUNCTION GAUGE SETUP*
- iBR override function for maintenance.

Multifunction Display Messages

For a list of usual messages that may be displayed in the multifunction display, refer to *MULTIFUNCTION DISPLAY MESSAGES* in this section.

Changing Numerical Display Indication

To change the indication in the numerical display, carry out the following:

1. Press the MODE button on the RH handlebar repeatedly until DISPLAY is visible in the multifunction display.

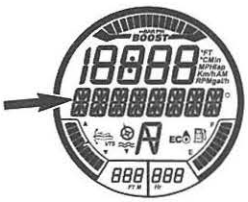

MESSAGE DISPLAYED

DISPLAY

2. Press the SET button to enter the DISPLAY function.
3. Press the UP or DOWN button until the preferred indication appears.
   - RPM
   - SPEED
   - ENGINE TEMP
   - TOP SPEED
   - AVG SPEED
   - TOP RPM
   - AVG RPM
   - CLOCK.



NUMERICAL DISPLAY SELECTION

1. Type of selected numerical display indication
2. Applicable value

4. Press the SET button to select and save the preferred indication, or wait for the display function to time out. The last indication visible will be automatically saved.

The following abbreviations are used in the numerical display:

- FT or M
- RPM
- MPH or Km/h
- °F or °C

- AM or PM
- Gal/h or l/h.

Resetting Numerical Display Indication

The following numerical display indications can be reset:

- Average fuel consumption
- Top speed
- Average speed
- Top RPM
- Average RPM.

To reset indications, double click the SET button. The numerical display will momentarily indicate zero (0).

NOTE: Each of these functions become active ONLY when selected as the numerical display indication.

Multifunction Gauge Setup

Changing Clock Setting

1. Press the MODE button repeatedly until SETTINGS is visible in the multifunction display.

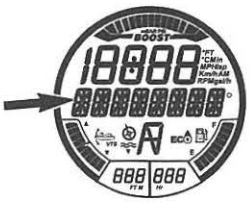

MESSAGE DISPLAYED
SETTINGS

2. Press the UP or DOWN button repeatedly until CLOCK is visible.

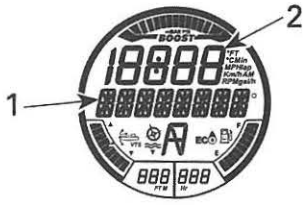

FUNCTION SELECTED - CLOCK
1. CLOCK message 2. Time

3. Press the SET button to enter the function. CHANGE CLOCK OFFSET message will be displayed.

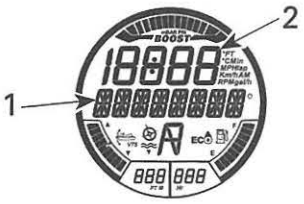

FUNCTION SELECTED - CHANGE CLOCK OFFSET
1. CHANGE CLOCK OFFSET message 2. Time

4. Press the UP or DOWN button to adjust the clock to the correct local time.
5. Press the SET button to save the setting and return to the main display.

NOTE: The clock uses the GPS signal to maintain the appropriate time referenced to Greenwich Mean Time (GMT). When setting the clock, only the hour indication may be changed.

Units of Measurement and Language Setting

The multifunction gauge is capable of displaying information in metric or imperial units and in various languages.

To change the units of measurement or to change the language displayed in the multifunction gauge, see your authorized Sea-Doo dealer.

MULTIFUNCTION DISPLAY MESSAGES

Displayed messages are subject to the functions as applicable to watercraft model.

USUAL MESSAGES	
WELCOME ABOARD SEA-DOO	Power up display
READING KEY	Key reading indication
NORMAL KEY	Normal key detected
LEARNING KEY	Learning key detected
RENTAL KEY	Rental key detected
DISPLAY	Display menu for numerical display indication
DEPTH	Water depth indication selection
RPM	RPM indication selection
SPEED	Watercraft speed indication selection
ENGINE TEMP	Engine temp selection
ALTITUDE	Altitude selection (from GPS)
TOP SPEED	Top speed selection
AVG SPEED	Average speed selection
TOP RPM	Maximum RPM selection
AVG RPM	Average RPM selection
FUNCTION CANNOT BE ENGAGED	Message when system cannot enter a specific function
CLOCK	Clock function
CHANGE CLOCK OFFSET	Clock setting function
FUEL CONSUMPTION	Menu for selecting fuel consumption display
INSTANT FUEL FLOW	Used to display instantaneous fuel consumption
AVERAGE FUEL FLOW	Used to display average fuel consumption since last reset
DISTANCE TO EMPTY	Display distance available based on fuel remaining in tank and instant fuel consumption
TIME TO EMPTY	Display time to empty based on fuel remaining in tank and instant fuel consumption
VTS MODE	VTS preset menu
PRESET 1	For changing PRESET 1
PRESET 2	For changing PRESET 2
FAULT CODE	Fault code menu for viewing codes
NO ACTIVE FAULT CODE	No fault codes are active.
KEY MODE	KEY mode menu
L-KEY	For changing learning key setting
SETTINGS	For accessing DOCK mode, iBR-OVR, and CLOCK settings
DOCK MODE	DOCK mode function menu
DOCK MODE OFF	DOCK mode disable
DOCK MODE AUTO	DOCK mode enable

USUAL MESSAGES	
DOCK MODE ON	Suspension moving to DOCK position
DOUBLE CLICK DOWN FOR DOCK MODE	Message scrolling while in DOCK mode menu
iBR-OVR	iBR mode function menu
OVR OFF	iBR-OVR function disable
OVR ON	iBR-OVR function enable
SLOW SPEED MODE ACTIVE	Slow speed mode acknowledgement
IS MODE	IS mode function
PRESS UP OR DOWN TO SET SUSPENSION	Message scrolling when adjusting suspension setting
PRESS UP OR DOWN TO ADJUST SUSPENSION	Message when selecting suspension setting
DOUBLE CLICK UP FOR AUTO MODE	Message scrolling when activating auto MODE
ENTERING SPORT MODE - INCREASED ACCELERATION - INSTRUCT PASSENGERS TO HOLD - PRESS SPORT BUTTON	Message when SPORT mode is selected
SPORT MODE ACTIVATED	Message when SPORT mode is activated
SPORT MODE - RETURN TO IDLE TO ACTIVATE	Message when SPORT mode cannot be activated, engine not at idle
SPORT MODE ACTIVE - RETURN TO IDLE TO CANCEL	Message when SPORT mode is in use
SPORT MODE DEACTIVATED	Message when user first returns to TOURING mode
SKI MODE	WAKE and SKI function
PLEASE EXIT SLOW SPEED MODE FIRST	Message when a rider attempts to enter SKI mode when already in SLOW SPEED mode
RAMP	Ramp curve or level of acceleration from 1 to 5
TARGET SPEED	Speed requested for SKI mode
SKI MODE - PRESS SET TO START OR MODE TO EXIT	SKI mode is unarmed but ready, the PWC is at idle
SKI MODE ARMED - RETURN TO IDLE OR PRESS MODE TO CANCEL	SKI mode is ready but the PWC is not at idle, the system is at standby
SKI MODE ACTIVE - PRESS MODE AND RETURN TO IDLE TO CANCEL	Message scrolling when SKI mode is active
SKI MODE - SPEED ADJUSTING	Message scrolling when adjusting SKI mode speed setting
SKI MODE ACTIVE - RETURN TO IDLE TO CANCEL	Message scrolling when the user pressed MODE to disengage but didn't return to idle
LAP TIME	Lap timer function
ECO MODE	Menu option for selecting FUEL ECONOMY MODE
ECO MODE ACTIVE - RETURN TO IDLE TO CANCEL	FUEL ECONOMY MODE is active, scrolling instruction for deactivation
SLOW SPEED MODE ACTIVE	Message when SLOW SPEED mode is in operation

USUAL MESSAGES	
SLOW SPEED MODE ACTIVATED	Message when SLOW SPEED mode is selected
SLOW SPEED MODE - SPEED ADJUSTING	Message scrolling when adjusting slow speed TARGET speed setting
PLEASE EXIT SLOW SPEED MODE FIRST	Message scrolling if SLOW SPEED mode is still active when trying to engage CRUISE mode
CRUISE MODE ACTIVE	Message when CRUISE mode is in operation
CRUISE MODE ACTIVATED	Message when CRUISE mode is selected
CRUISE MODE - SPEED ADJUSTING	Message scrolling when adjusting cruise TARGET speed setting
CRUISE MODE - SELECT SPEED - PRESS SET TO ACCEPT OR MODE TO EXIT	Message scrolling when selecting speed.
PLEASE EXIT CRUISE MODE FIRST	Message scrolling if CRUISE mode still active when trying to engage SLOW SPEED mode
LOW FUEL	Message when approximately 25% fuel remaining
NEUTRAL ADJUSTMENT	Neutral adjustment

FAULT MESSAGES	
WRONG KEY	Wrong key selected for model
RIGHT KEYPAD ERROR	MODE/SET, UP/DOWN arrow button malfunction
LOW OIL PRESSURE	Engine low oil pressure detected
HIGH EXHAUST TEMPERATURE	High exhaust temperature detected
HIGH TEMPERATURE	High engine temperature detected
CHECK ENGINE	Engine system malfunction or maintenance required
HIGH BATTERY VOLTAGE	High battery voltage detected
LOW BATTERY VOLTAGE	Low battery voltage detected
LIMP HOME MODE	Major fault detected, engine power limited
FUEL SENSOR DEFECTIVE	Fuel level sensor fault
WATER TEMP SENSOR DEFECTIVE	Problem in iBR, not sending water temperature info.
CALIBRATION CHECKSUM ERROR	Cluster programming corrupted, need to be re-flashed using B.U.D.S.
MAINTENANCE REQUIRED	Watercraft maintenance required
DEPTH SOUNDER MODULE COMMUNICATION PROBLEM	Error message if depth sounder is disconnected while riding
iS MODULE COMMUNICATION PROBLEM	Error message if communication with the suspension module is lost while riding
iBR MODULE ERROR	Error message if communication with the iBR module is lost while riding
OTAS DEFECTIVE – MAINTENANCE REQUIRED	OTAS is not correctly adjusted

TROUBLESHOOTING

DIAGNOSTIC TIPS

NOTE: It is a good practice to check for fault codes using B.U.D.S. software as a first troubleshooting step. Refer to *COMMUNICATION TOOLS AND B.U.D.S.* subsection.

IMPORTANT: When troubleshooting an electrical system fault, check battery condition, cables and connections first.

Electrical System Activation

1. Press the START/STOP button.

NOTE: Pressing the START/STOP button without the tether cord (D.E.S.S. key) installed on the engine cut-off switch will turn on electrical power without starting the engine; the information center will cycle through a self-test function and shut off its display after a few seconds. However, the electrical system will stay powered up for approximately three minutes after the START button was pressed.

2. Install the tether cord on the engine cut-off switch to activate ECM and Information Center when testing procedures require a component or system to be supplied with electrical power.

IMPORTANT: When B.U.D.S. is being used, the ECM will stop communicating with B.U.D.S. approximately 3 minutes after the START button is pressed. Therefore, operations with B.U.D.S. will be interrupted. To reestablish communication, briefly press the START button. **Do not hold** the START button to avoid engine starting.

Circuit Testing

Check the related-circuit fuse condition with a fuse tester or ohmmeter (a visual inspection could lead to a wrong conclusion).

Electrical Connection Inspection

When replacing an electric or electronic component, always check electrical connections. Make sure they are tight, make good contact, and are corrosion-free. Dirty, loose or corroded contacts are poor conductors and are often the source of a system or component malfunction.

Pay particular attention to ensure that pins are not bent or pushed out of their connectors.

Ensure all wire terminals are properly crimped on wires, and connector housings are properly fastened.

Check for signs of moisture, corrosion or dullness. Clean pins properly and coat them with DIELECTRIC GREASE (P/N 293 550 004) or other appropriate lubricant when reassembling them, except if otherwise specified such as for the ECM connectors.

Pay attention to ground wires.

TROUBLESHOOTING GUIDELINES

Press the START/STOP button and install the tether cord on the engine cut-off switch.

NOTE: Information center should come on, cycle through its self test function, and stay on for approximately 3 minutes after which all electrical power will turn off.

Briefly press the START/STOP button every 3 minutes to reenergize the electrical system. Do not hold the START/STOP button to avoid engine starting.

NOTE: When troubleshooting using the following guidelines, it is important to remember that some indications, functions and features described may not apply to every PWC model, or may be available as an option.

Information Center "Does Not Turn ON"

If the information center does not turn ON when the START/STOP button is pressed, the power circuit or ground circuit to the information center is probably open.

iS Models

Double click the iS button to move the suspension to the up position. If the suspension does not move to the up position, the problem is related to the electrical power system. Refer to *POWER DISTRIBUTION AND GROUNDS* subsection.

If the suspension moves to the up position, the electrical power system is functioning normally.

All Models

Test the 3 A GAUGE/OTAS/CAPS fuse (fuse 12) in fuse box 1 (FB1).

If the fuse tests good, carry out an *INFORMATION CENTER INPUT VOLTAGE TEST.*

If the information center input voltage test is good, test for continuity of the gauge ground circuit (gauge connector pin 11 (BLACK wire) to the ground bus-bar (pin H7) in FB1.

Refer to *WIRING DIAGRAM* for circuit details.

Information Center Turns ON with Some Indications Missing

1. Connect to the latest applicable B.U.D.S. version, refer to *COMMUNICATION TOOLS AND B.U.D.S.* subsection.
2. Read the fault codes, refer to *DIAGNOSTIC AND FAULT CODES* subsection.

If a fault code is related to a communication problem, carry out a continuity test of the CAN bus wires between the applicable module and the CAN bus-bars in FB1. Refer to *WIRING DIAGRAM* and *CONTROLLER AREA NETWORK (CAN)* subsections.

NOTE: The information center, ECM, iS module, iBR module, and the diagnostic connector are linked together through CAN bus-bars in fuse box 1. If one wire of the two wire CAN bus system is open, communication will be slower than normal. Multiple fault codes may be generated and the ECM will put the watercraft in LIMP HOME mode.

If one module cannot be seen in B.U.D.S., the fault may be the wires that link the module to the CAN bus bars, or a problem internal to that module. Test the CAN bus wires from the faulty module to the CAN bus-bars in FB1 for continuity before assuming the problem is the module.

Information Center Goes Blank Except for:

- GPS indicator ON
- Compass ON (if watercraft moving)
- Fuel level ON
- iBR fault indicator light ON
- Indicated speed
- No other indications visible.

NOTE: GPS, compass and iBR indications are not applicable to GTS models.

There is no communication between the information center and all other modules (ECM, iS, iBR).

Carry out a continuity check of the CAN bus wires from the CAN bus-bars in FB1 to the information center (pins 2 and 3). Refer to the *WIRING DIAGRAM* and *CONTROLLER AREA NETWORK (CAN)* subsections for details.

If an open circuit is detected, carry out same test from the pin steering connector (pins 8 and 20).

All Indications ON Except for:

All Models Except GTS

- LAKE WATER TEMP indication
- VTS indication
- iBR position indication
- CHECK ENGINE light is on.

NOTE: The lake water temperature indication is not available for the GTI and WAKE models.

The iBR CAN bus circuit is open or the iBR module is at fault.

NOTE: The ECM will generate several fault codes and engage LIMP HOME mode.

Carry out a continuity check of the CAN bus wires from the CAN bus-bars in FB1 to the iBR module (pins 2 and 3). Refer to the *WIRING DIAGRAM* and *CONTROLLER AREA NETWORK (CAN)* subsections for details.

NO RPM Indication and NO Engine Hour Display

If there is NO RPM indication and NO engine hour display, and the watercraft is in LIMP HOME mode, the CAN bus to the ECM is open.

Carry out a continuity check of the CAN bus wires from the CAN bus-bars in FB1 to the ECM module, connector "B" pins C1 and C2 (B-C1 and B-C2). Refer to the *WIRING DIAGRAM* and *CONTROLLER AREA NETWORK (CAN)* subsections for details.

NO iS Position Display

If there is no iS position display (suspension position), the iS module is at fault, or its CAN bus circuit is open.

Carry out a continuity check of the CAN bus wires from the CAN bus-bars in FB1 to the iS module (pins 2 and 3). Refer to the *WIRING DIAGRAM* for details.

NOTE: If communication with the iS module cannot be established when electrical power is first applied, the monitoring system assumes this is a normal situation (PWC not equipped with iS) and will not display an error message.

NO Fuel Level Indication

If there is no fuel level indication, test the fuel level sensor and its wiring circuit to the information center. Refer to *FUEL TANK AND FUEL PUMP* subsection.

NO Depth Gauge Indication

If there is no depth gauge indication available and the depth sounder active indicator is not on, refer to *DEPTH GAUGE* in this subsection.

NOTE: If communication with the depth sounder cannot be established when electrical power is first applied, the monitoring system assumes this is a normal situation (PWC not equipped with depth finder) and will not display an error message.

NO Speed or Compass Indication

All Models Except GTS

To obtain a speed or compass reading and to turn on the GPS indicator, the GPS requires a good uplink to at least three navigation satellites.

If there is no speed or compass indication, look for the GPS indicator icon. If the GPS indicator is off, either the GPS cannot uplink with the satellites, or the GPS system in the information center is at fault.

If another watercraft nearby displays a good GPS uplink (GPS indicator light on in cluster), the information center may need to be replaced.

NOTE: If the GPS uplink is lost while navigating at speed, the speedometer will provide an estimated speed indication based on other parameters. The compass indication will not be available until a good satellite uplink is reestablished.

Speed and Compass Indication Slow to Come ON

All Models Except GTS

When initially powering up the watercraft and driving away, the speed and compass indications may be slow to come on. This is normal as the GPS requires time to establish an uplink with the navigation satellites (cold start).

If the watercraft was run long enough to display the compass and speed indications, shut down for a short period of time and then restarted (hot start), the speed and compass indications should not take more than 30 seconds to come on.

If the speed and compass indications take more than 30 seconds to come on, test for the following:

- GPS fuse 4 in FB1
- Battery voltage at pin 1 of the information center
- Continuity of wire between information center (pin 1) and contact A5 of FB1.

NOTE: This circuit provides 12 Vdc to the GPS in the information center so that it memorizes the satellites it was linked to for a period of two hours. This allows the indications to be available within a few seconds of restarting the watercraft (hot start). After a two hour period, the GPS will have to reestablish new satellite links.

Beeper Does Not Function

The beeper is incorporated within the information center.

If no beep code is heard when installing the tether cord, first ensure ECM is powered. Refer to *ELECTRONIC FUEL INJECTION (EFI)* subsection.

In B.U.D.S., carry out the following:

- **Cluster Buzzer Test** on the cluster activation page
- Check for fault codes. Carry out service actions as applicable.

If the **Cluster Buzzer Test** failed, the ECM is powered, and the ECM and information center are communicating properly through the CAN bus, replace the information center.

PROCEDURES

INFORMATION CENTER

Information Center Self Test Function

When the START/STOP button is pressed momentarily and the vehicle powers up, all LCD segments and indicator lights in the information center will turn **ON for 3 seconds** (self test function). This self test function allows the driver time to ensure that all indications are functioning properly.

It also validates the information centers internal circuits, however, this does not validate proper operation of the individual external circuits and sensors that provide inputs to the information center.

If a system fault is detected by the ECM, the applicable message and/or indicator light will be displayed, and a beep code may be heard.

If the tether cord is not installed, the indications in the information center will shut off a few seconds after the self test function, but the electrical system power stays on for approximately 3 minutes. Installing the tether cord on the engine cut-off switch will turn the indications back on.

If the tether cord is installed, the cluster will stay on for approximately 3 minutes.

NOTE: If the START/STOP button is pressed and held without the tether cord installed, the information center will stay on as long as the START button is held.

Multifunction Gauge Setup

Clock Setting

All Models Except GTS

1. Press the MODE button repeatedly until SETTINGS is visible in the multifunction display.

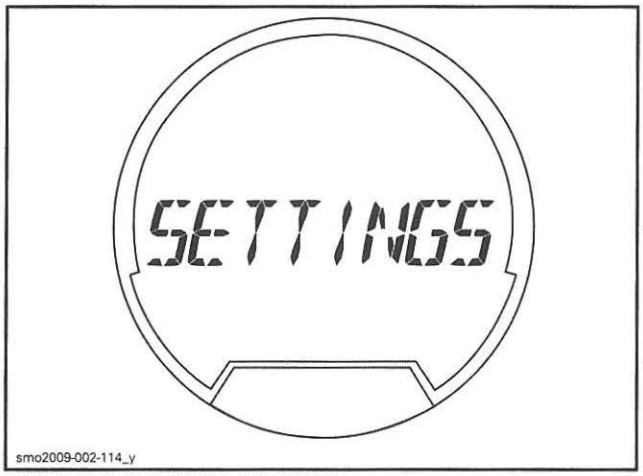

FUNCTION SELECTED: SETTINGS

2. Press the UP or DOWN arrow button repeatedly until CLOCK is visible.



FUNCTION SELECTED: CLOCK

3. Press the SET button to enter the function. CHANGE CLOCK OFFSET message will be displayed.

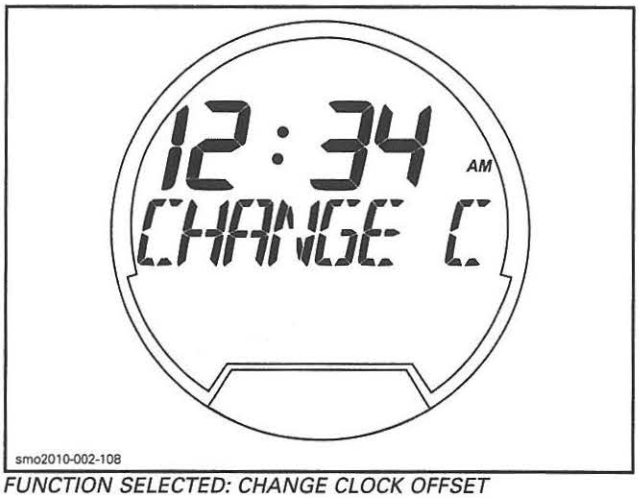

FUNCTION SELECTED: CHANGE CLOCK OFFSET

4. Press the UP or DOWN arrow button to adjust the clock to the correct local time.
5. Press the SET button to save the setting and return to the main display.

NOTE: The clock uses the GPS signal to maintain the appropriate time referenced to Greenwich Mean Time (GMT). When setting the clock, only the hour digits may be changed. For the clock to function, the GPS requires a good satellite uplink.

Units of Measurement and Language Setting

1. Connect vehicle to the latest applicable B.U.D.S. version, refer to the *COMMUNICATION TOOLS AND B.U.D.S.* subsection.
2. Press the START/STOP button to energize the electrical system.

NOTE: You will need to press the START button every three minutes or the electrical system will shut off.

3. Select the **Read Data** button.
4. Choose the **Setting** tab at the top of the page.

At the bottom LH side of the setting page, select the **Cluster** tab.

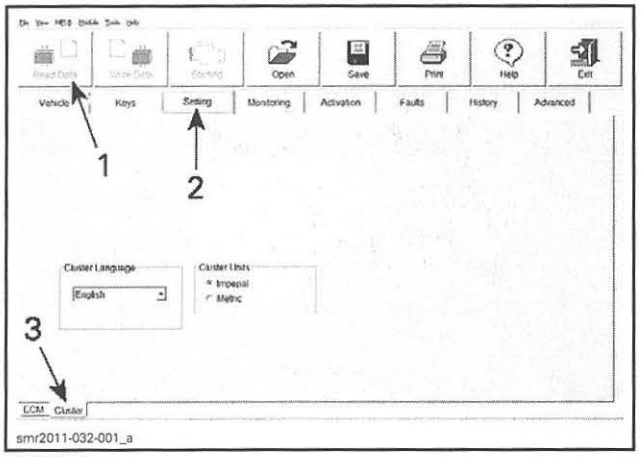

TYPICAL
1. *Read Data*
2. *Setting tab*
3. *Cluster tab*

In the **Cluster Language** field, choose the desired unit of language.

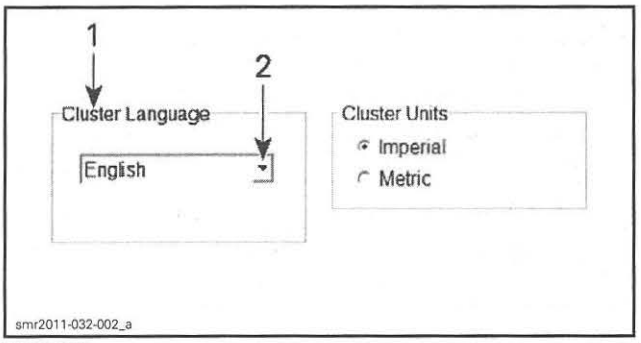

TYPICAL
1. *Cluster Language field*
2. *Click on this arrow to expand list of available languages*

In the **Cluster Units** field, choose the desired unit of measurement, **Imperial** or **Metric**.

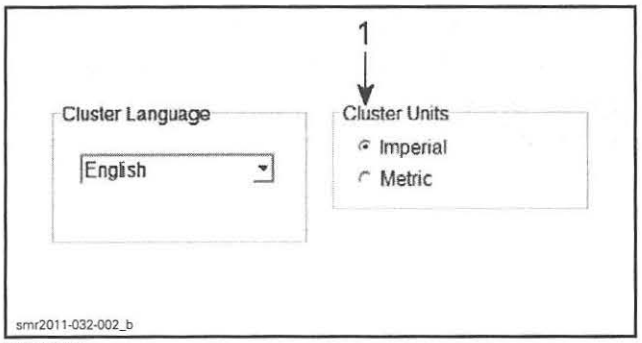

TYPICAL
1. *Cluster Units field*

Clearing the Maintenance Reminder Indicators

When the watercraft, engine or supercharger are due for maintenance, the maintenance reminder indicator will come on, and a scrolling MAINTENANCE REQUIRED or SUPERCHARGER MAINTENANCE REQUIRED message will scroll in the digital screen. These maintenance reminders must be cleared using B.U.D.S.

1. Connect vehicle to the latest applicable B.U.D.S. version, refer to the *COMMUNICATION TOOLS AND B.U.D.S.* subsection.
2. Press the START/STOP button to energize the electrical system.

NOTE: You will need to press the START button every three minutes or the electrical system will shut off.

3. Select the **Read Data** button.
4. Choose the **Vehicle** tab at the top of the page.
5. At the bottom RH side of the vehicle page in the **Last Service** field, choose **Reset Service/"Maint"** or **Reset Supercharger Maintenance** button as applicable.

NOTE: If the supercharger maintenance was carried out before the reminder appeared in the information center, the supercharger maintenance reminder must be reset in order to reset the supercharger maintenance hour counter and prevent the reminder from appearing prematurely.

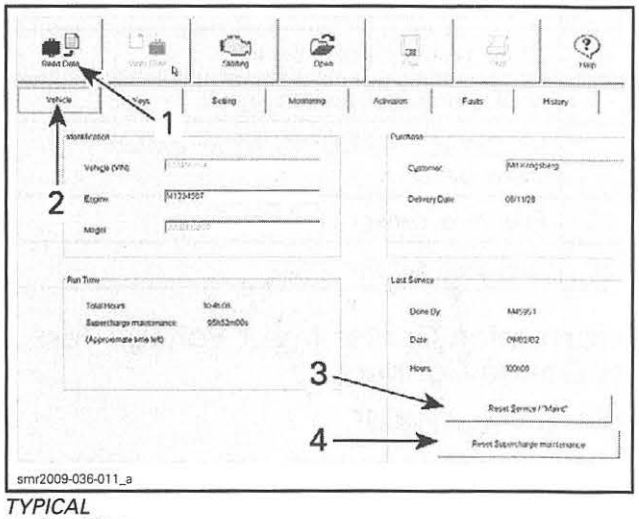

TYPICAL
1. *Read Data*
2. *Vehicle tab*
3. *Reset Service/"Maint" button*
4. *Reset Supercharger Maintenance button*

Information Center Pin-Out

NOTE: Depending on watercraft model and installed accessories, some multifunction gauge connector pins may not be used.

INFORMATION CENTER PIN-OUT	
PIN NO.	FUNCTION
1	GPS back-up power
2	CAN HI
3	CAN LOW
4	Spare (buzzer external GND)
5	Spare (buzzer external GND)
6	Not used
7	Cruise switch signal Vdc (SET switch for GTS models)
8	Spare (digital input)
9	Not used
10	Cruise switch ground (SET switch for GTS models)
11	Gauge GND
12	Gauge input Vdc power
13	VTS switch signal (UP or DOWN)
14	ECO/SPORT switch signal (ECO or SPORT)
15	VTS switch common
16	UP or DOWN arrow switch signal
17	MODE and SET switch signal
18	MODE/SET, UP/DOWN arrow switch common
19	Fuel level sensor VDC signal
20	Fuel level sensor GND

Information Center Input Voltage Test (at Gauge Connector)

GTS, GTI and WAKE

1. Remove the gauge bezel, refer to *BODY* subsection.

RXT, GTX and WAKE Pro

2. Remove the gauge support cover, refer to *INFORMATION CENTER REMOVAL* in this subsection.

All Models

3. Disconnect the gauge connector.

NOTICE Pull on connector with your hand as you pull the connector lock out with the screwdriver. Do not twist the screwdriver.

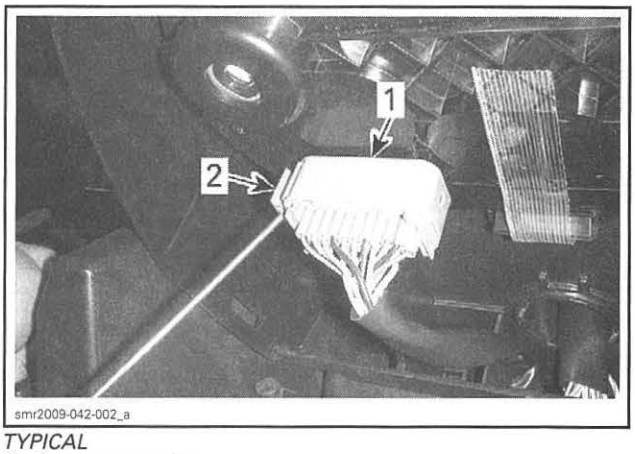

TYPICAL
1. *Gauge connector*
2. *Pull out to unlock connector*

4. Set the FLUKE 115 MULTIMETER (P/N 529 035 868) to Vdc.
5. Press the START button and install the tether cord on the engine cut-off switch.
6. Measure the information center input voltage as per following table.

INPUT VOLTAGE TEST AT GAUGE CONNECTOR		
PROBE		VOLTAGE
Pin 12 (VIOLET)	Pin 11 (BLACK)	Battery voltage
Pin 12 (VIOLET)	Battery ground	

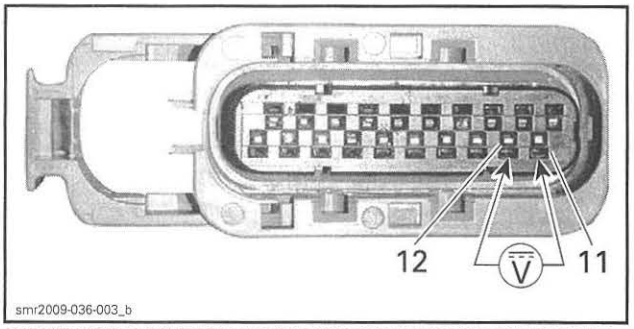

INPUT VOLTAGE TEST AT GAUGE CONNECTOR (PINS 12 TO 11)

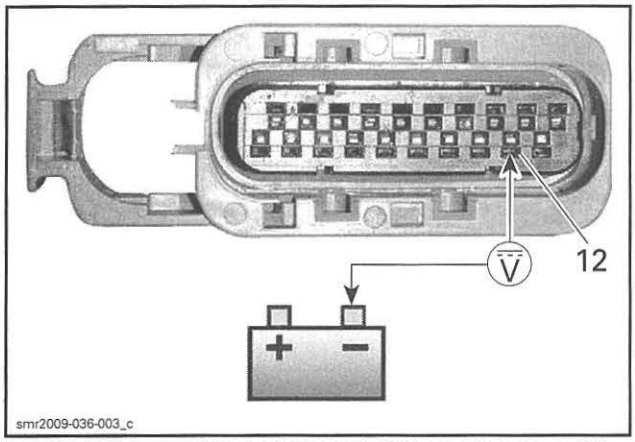

INPUT VOLTAGE TEST AT GAUGE CONNECTOR (PIN 12 TO BATTERY GROUND)

If battery voltage is measured as specified, replace the information center.

If battery voltage is measured to battery ground but not to pin 11, carry out a *CONTINUITY TEST OF GAUGE GROUND WIRE* circuit from the gauge connector to the ground bus-bar contact in FB1 as described further in this subsection.

7. If battery voltage is not measured at the gauge connector, carry out a *INFORMATION CENTER INPUT VOLTAGE TEST (AT STEERING CONNECTOR).*

Information Center Input Voltage Test (at Steering Connector)

1. Open front storage compartment cover.

GTS, GTI and Wake

2. Remove battery access panels.

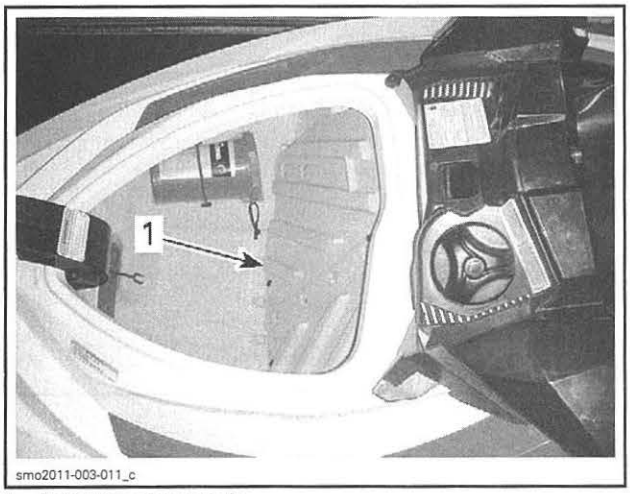

1. Battery access panels

RXT, GTX and WAKE Pro

3. Remove front storage bin.

RXT and GTX Models Without Suspension

4. Reach into the front storage compartment and remove the front air ventilation hoses.

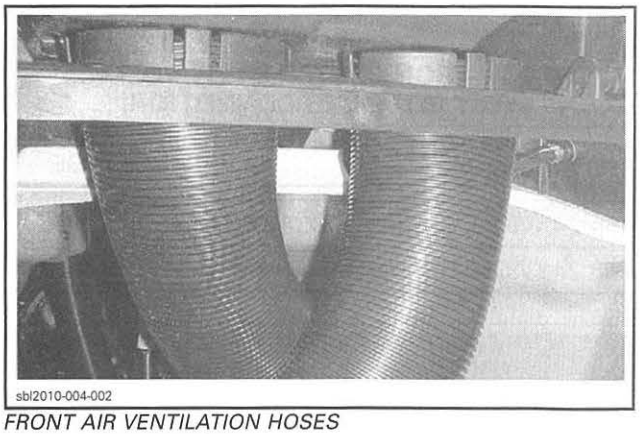

FRONT AIR VENTILATION HOSES

All Models

5. From under the steering support area, disconnect the 24-pin steering connector.

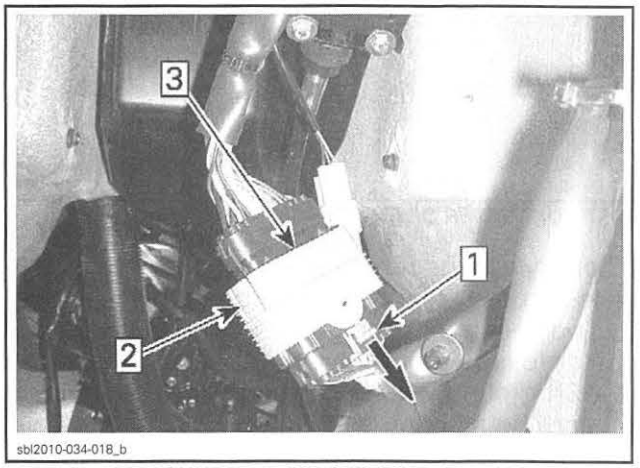

TYPICAL - DISCONNECT 24-PIN STEERING CONNECTOR
Step 1: Pull out safety lock
Step 2: Press in on release tab
Step 3: Pull locking collar down

6. Connect the DIAGNOSTIC HARNESS (P/N 529 036 188) to make an in-line connection between the disconnected connectors.

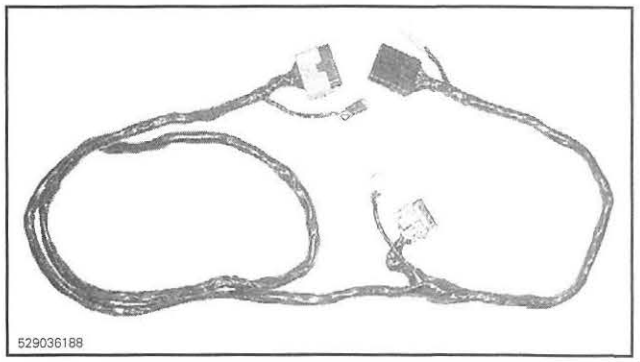

7. Press the START/STOP switch and install the tether cord on the engine cut-off switch.
8. Carry out an input voltage test at the steering connector (vehicle harness side) as per following table.

INFORMATION CENTER INPUT VOLTAGE TEST (STEERING CONNECTOR)		
TEST CONNECTOR ON DIAGNOSTIC HARNESS		VOLTAGE
Pin 24 (VIOLET)	Pin 1 (BLACK)	Battery voltage
Pin 24 (VIOLET)	Battery ground	

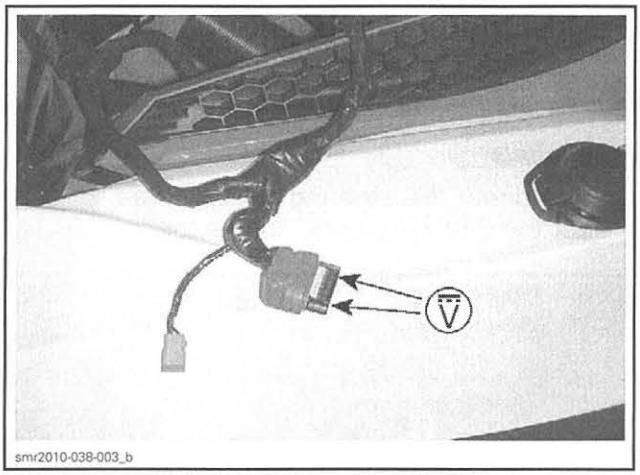

TEST CONNECTOR OF DIAGNOSTIC HARNESS

If battery voltage is read at steering connector (vehicle harness side) as specified in previous table, but was not measured to pin 11 at the gauge connector (gauge ground wire), repair or replace the BLACK ground wire between the gauge connector and the steering connector.

If battery voltage is measured to battery ground but not to pin 1, carry out a *CONTINUITY TEST OF GAUGE GROUND WIRE* described further in this subsection.

If no voltage is measured, carry out the following steps.

GTS, GTI and WAKE Models

9. Remove the battery access panel at the back of the storage compartment.

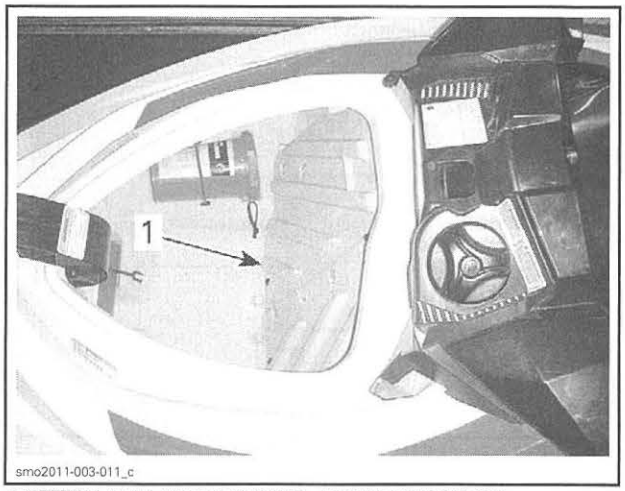

BATTERY AND FUSE ACCESS, FRONT STORAGE COMPARTMENT
1. Battery access panel

RXT and GTX Models with Suspension

10. Open the boarding platform and remove the RH storage bin.

RXT, GTX (Without Suspension) and Wake Pro Models

11. Remove the RH access panel on the boarding platform.

All Models

12. Using the FLUKE 115 MULTIMETER (P/N 529 035 868) set to Vdc, measure battery voltage at the battery terminals.

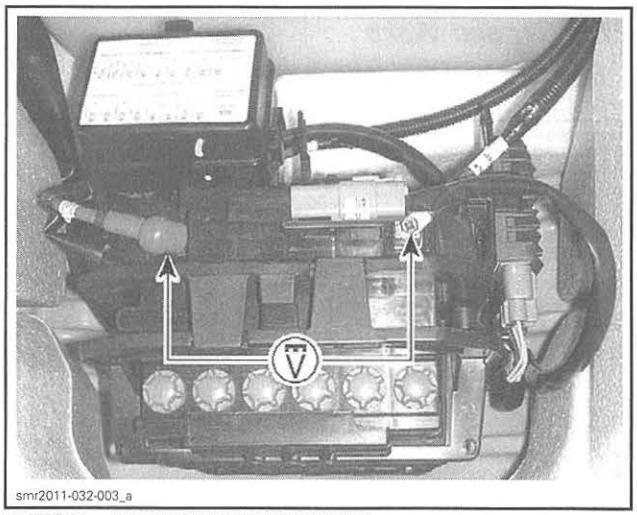

TYPICAL - BATTERY VOLTAGE TEST

13. Remove fuse box cover.

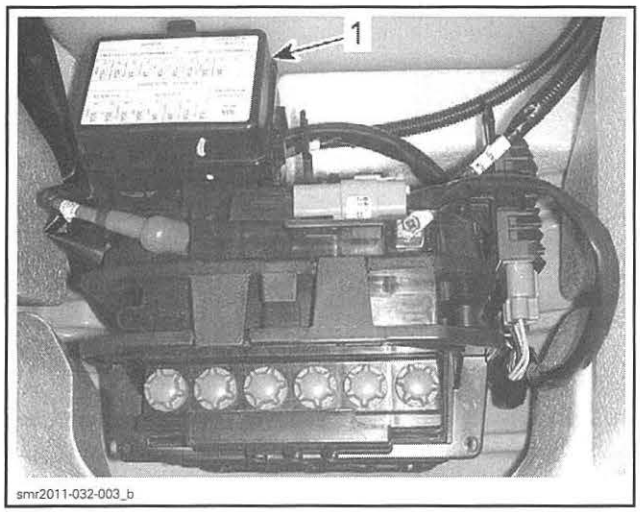

1. Fuse box cover

14. Press the START/STOP button to energize electrical system and install the tether cord.
15. Test for battery voltage between each of the terminals atop the GAUGE/OTAS/CAPS fuse (12) and battery ground as per following table.

VOLTAGE TEST AT FB1			
GAUGE FUSE	TEST PROBES		READING
Fuse pin numbers	E8	Battery (-) post	Battery Vdc
	F8		

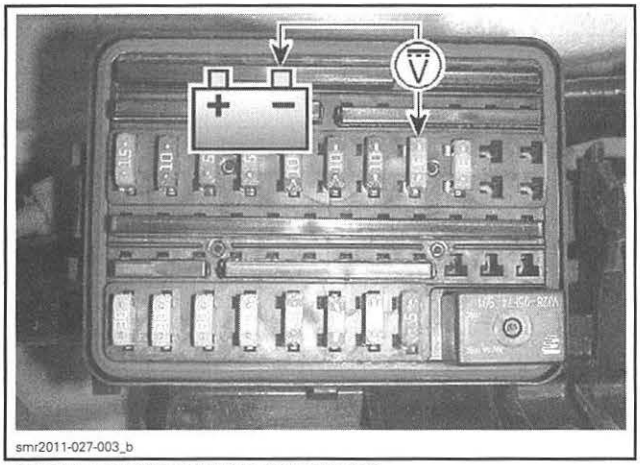

VOLTAGE TEST AT FUSE CONTACTS

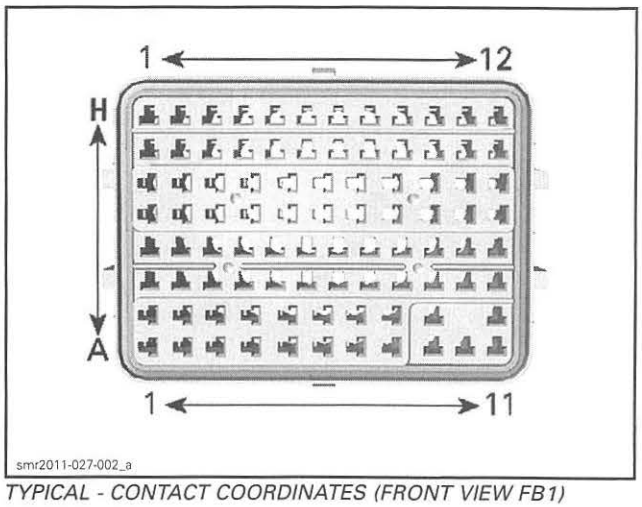

TYPICAL - CONTACT COORDINATES (FRONT VIEW FB1)

If battery voltage is measured at E8 but not at F8 (with fuse installed), replace the fuse.

If battery voltage is measured at fuse contact E8, refer to *CONTINUITY TEST OF GAUGE POWER WIRE* in this subsection.

If no voltage is measured at fuse contact E8, slightly lift one corner of the long bus-bar (12 contacts long).

16. Measure for battery Vdc between the bus-bar and battery ground.

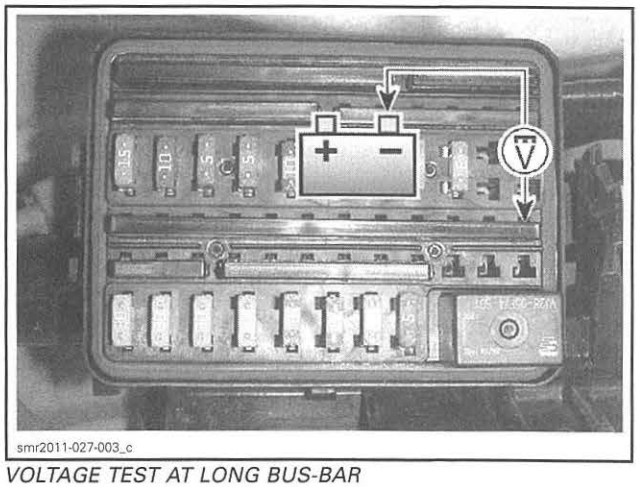

VOLTAGE TEST AT LONG BUS-BAR

If battery voltage is measured at the long bus-bar, repair or replace the wire jumper D8 to E8 (behind fuse box).

Continuity Test of Gauge Power Wire

1. Remove tether cord from engine cut-off switch.
2. Disconnect gauge connector.

NOTICE Pull connector lock out sideways. Do not twist the screwdriver.

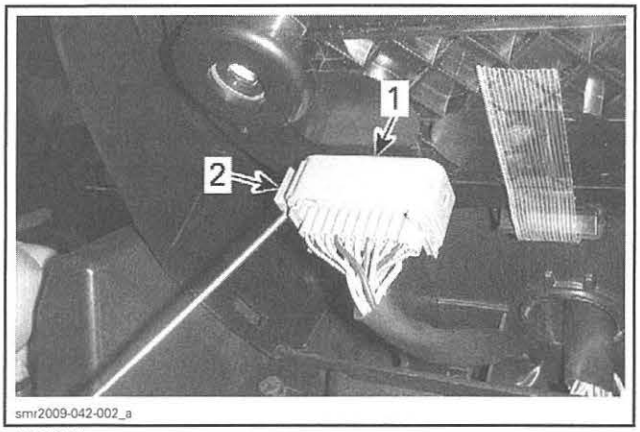

TYPICAL
1. *Gauge connector*
2. *Pull out to unlock connector*

3. Disconnect 24-pin steering connector.

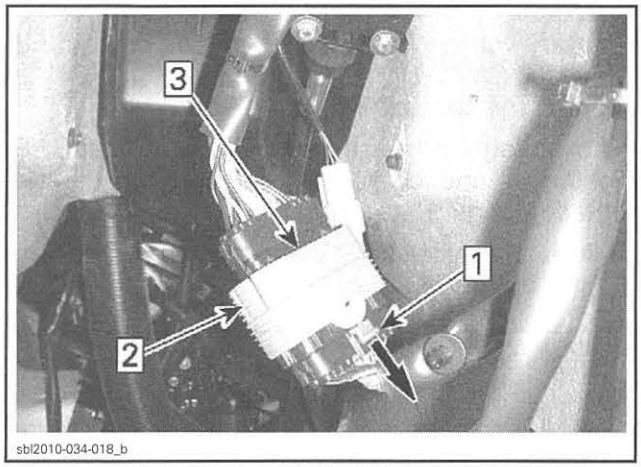

TYPICAL - 24-PIN STEERING CONNECTOR DISCONNECT
Step 1: Pull out safety lock
Step 2: Press in on release tab
Step 3: Pull locking collar down

4. Connect the DIAGNOSTIC HARNESS (P/N 529 036 188) to make an in-line connection between the disconnected connectors.

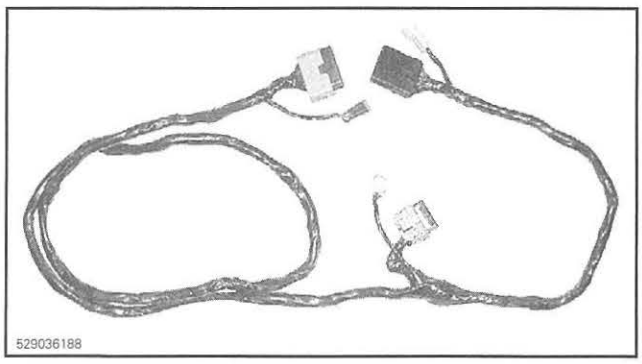

5. Remove the gauge fuse in FB1.

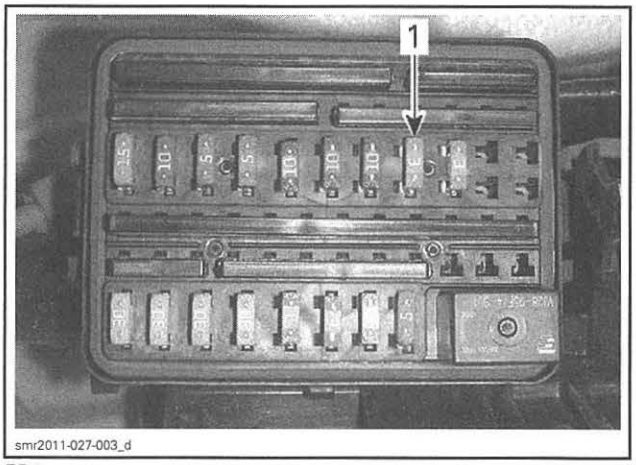

FB1
1. *Remove gauge fuse (F1)*

6. Set FLUKE 115 MULTIMETER (P/N 529 035 868) to Ω setting.



7. Test the information center power wire continuity as per following table.

CONTINUITY TEST OF GAUGE POWER WIRE			
GAUGE CONNECTOR	TEST CONNECTOR ON DIAGNOSTIC HARNESS	FUSE BOX 1	READING
Pin 12 (VIOLET)	Pin 24 (VIOLET)	–	Close to 0 Ω
Pin 12 (VIOLET)	–	F8	
–	Pin 24 (VIOLET)	F8	

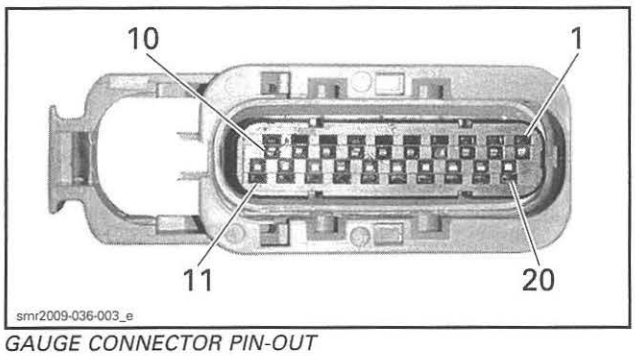

GAUGE CONNECTOR PIN-OUT

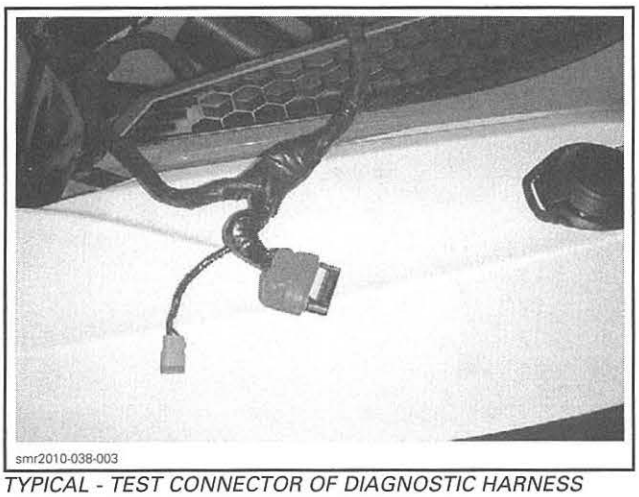

TYPICAL - TEST CONNECTOR OF DIAGNOSTIC HARNESS

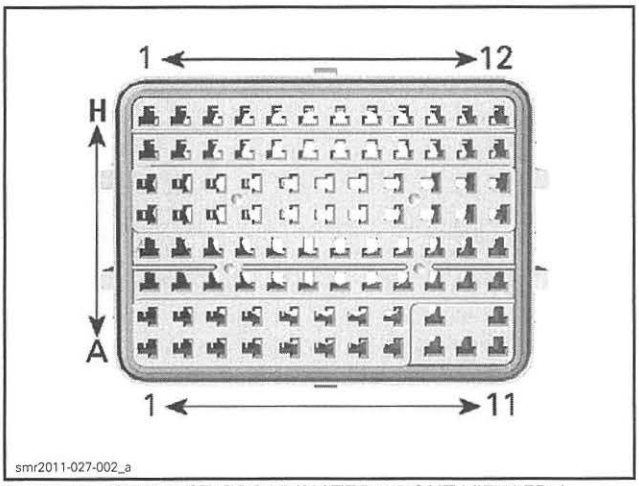

TYPICAL - CONTACT COORDINATES (FRONT VIEW FB1)

8. If an open circuit is measured, test the following:

CONTINUITY TEST OF GAUGE POWER WIRE		
FUSE BOX 1	TEST CONNECTOR ON DIAGNOSTIC HARNESS	READING
F8 to H9	–	Close to 0 Ω
H9 to H11	–	
H11	Pin 24 (VIOLET)	

9. Repair or replace wiring/connectors as required.

Continuity Test of Gauge Ground Wire

1. Disconnect the 24-pin steering connector.

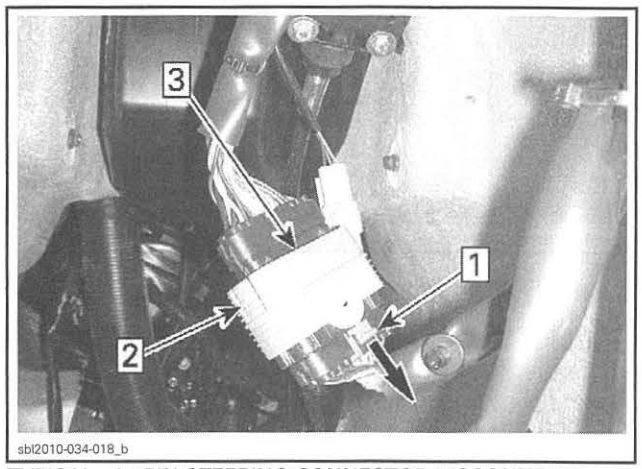

TYPICAL - 24-PIN STEERING CONNECTOR DISCONNECT
Step 1: Pull out safety lock
Step 2: Press in on release tab
Step 3: Pull locking collar down

2. Connect the DIAGNOSTIC HARNESS (P/N 529 036 188) to make an in-line connection between the disconnected connectors.

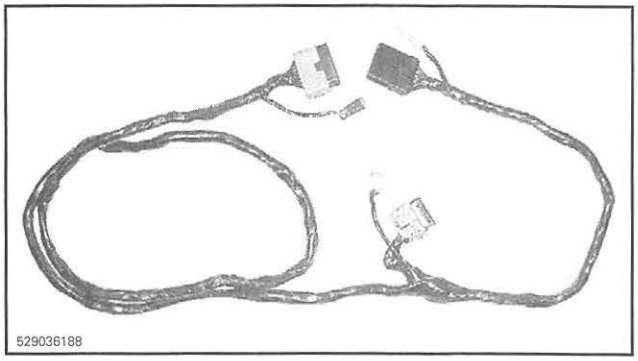

3. Remove the ground bus-bar in the fuse box.

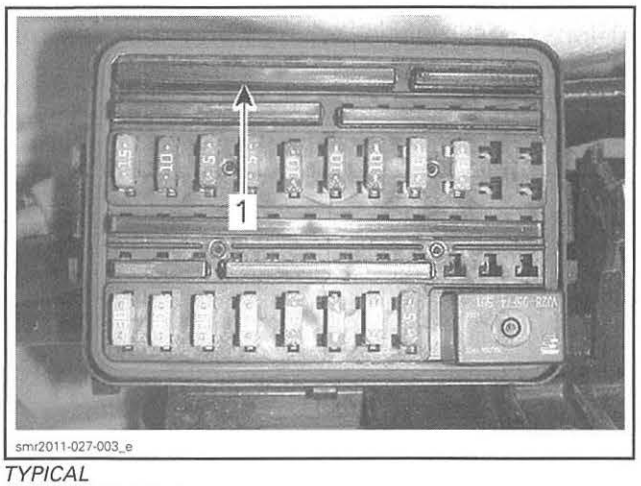

TYPICAL
1. Ground bus bar

4. Set FLUKE 115 MULTIMETER (P/N 529 035 868) to Ω selection and carry out a continuity test as per following table. Refer to the *WIRING DIAGRAM* for circuit details.



CONTINUITY TEST OF GAUGE GROUND WIRE			
MULTIMETER PROBES			READING
GAUGE CONNECTOR	TEST CONNECTOR ON DIAGNOSTIC HARNESS	FUSE BOX	
Pin 11 (BLACK)	–	H7	Close to 0 Ω
Pin 11 (BLACK)	Pin 1 (BLACK)	–	
–	Pin 1 (BLACK)	H7	

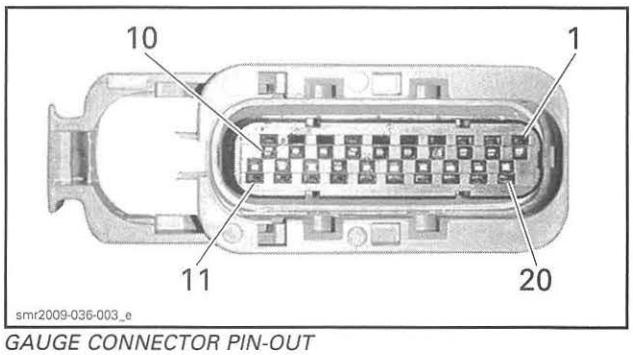

GAUGE CONNECTOR PIN-OUT

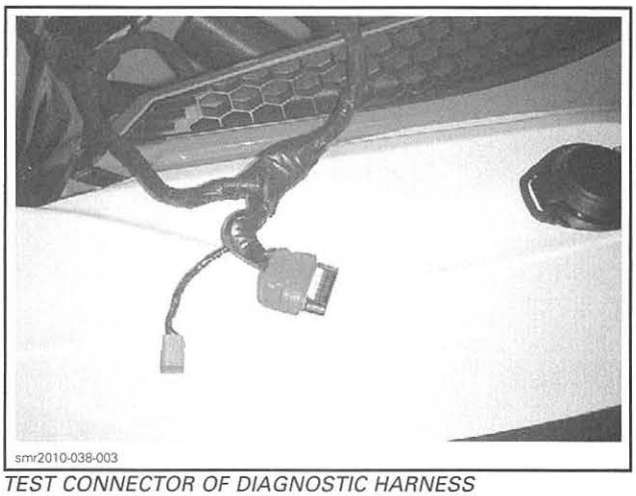

TEST CONNECTOR OF DIAGNOSTIC HARNESS

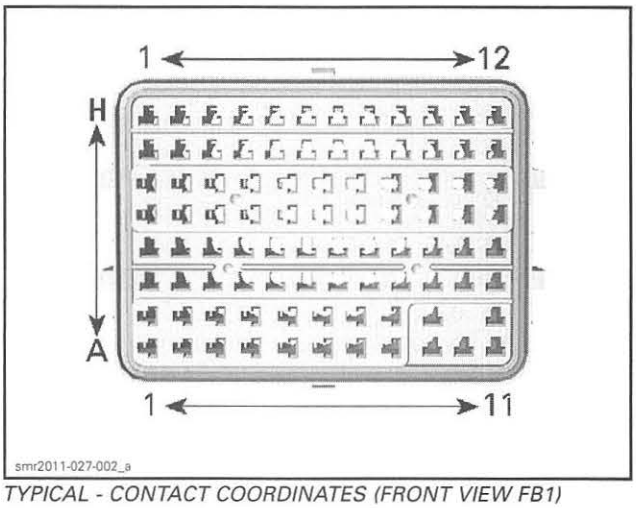

TYPICAL - CONTACT COORDINATES (FRONT VIEW FB1)

5. Repair wiring and connectors as required.

Information Center Removal

GTS, GTI, RXP-X and WAKE

1. Remove the bezel that covers the information center and mirrors, refer to *BODY* subsection.
2. Press in on the two retaining tabs at the top of the information center.

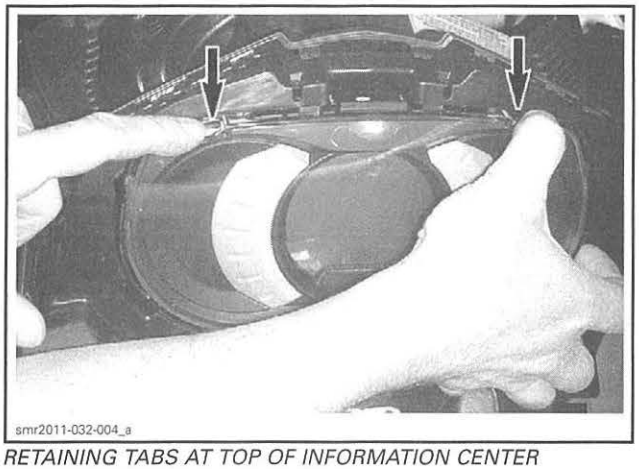
smr2011-032-004_a

RETAINING TABS AT TOP OF INFORMATION CENTER

3. Pull information center out of console.

GTX, RTX and Wake Pro

1. Open the front storage compartment cover.
2. Move the steering to its highest position, refer to *BODY* subsection.
3. Using a long flat screwdriver, insert the blade between the lower locking tabs (one each side) of the gauge support cover, and carefully pry the tabs outwards to release them from the gauge support.

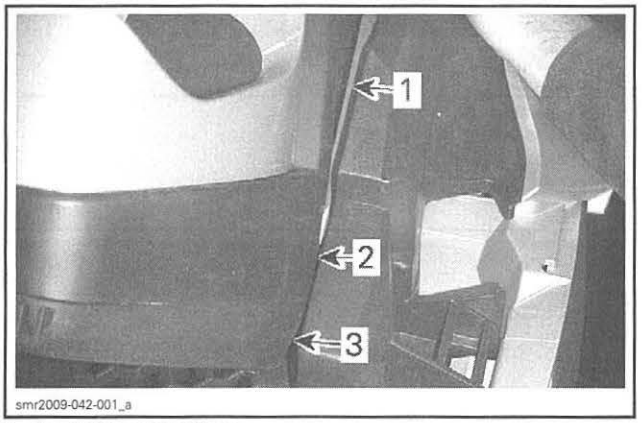

smr2009-042-001_a

1. *Long flat screwdriver*
2. *Locking tab*
3. *Gauge support cover*

4. Pull the bottom of the panel outwards to remove it from the gauge support.

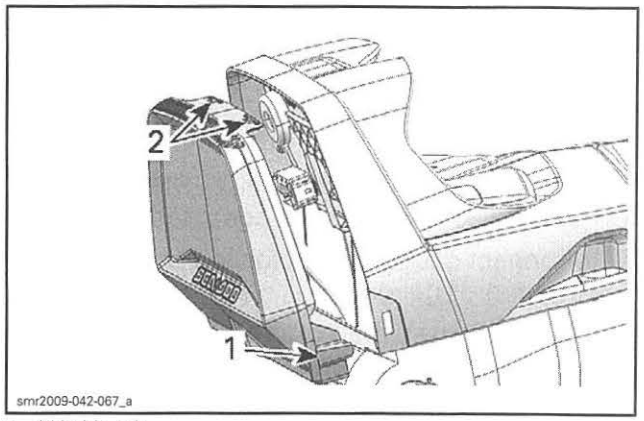

smr2009-042-067_a

1. *LH side tab*
2. *Upper retaining tabs*

5. Disconnect the gauge connector.

NOTICE Pull connector lock out sideways. Do not twist the screwdriver.

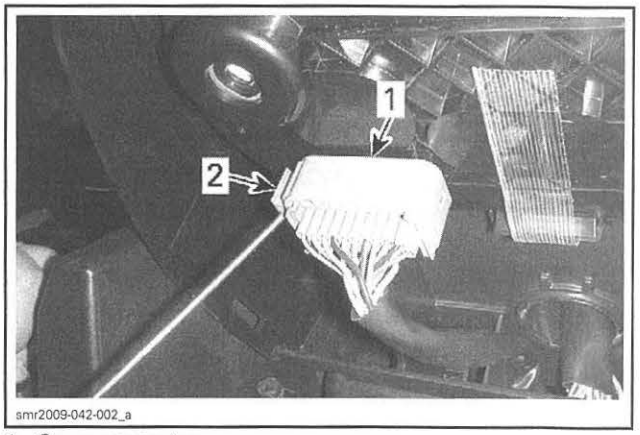

smr2009-042-002_a

1. *Gauge connector*
2. *Pull out to unlock*

6. Insert a flat screwdriver between the upper gauge locking tab and gauge support.

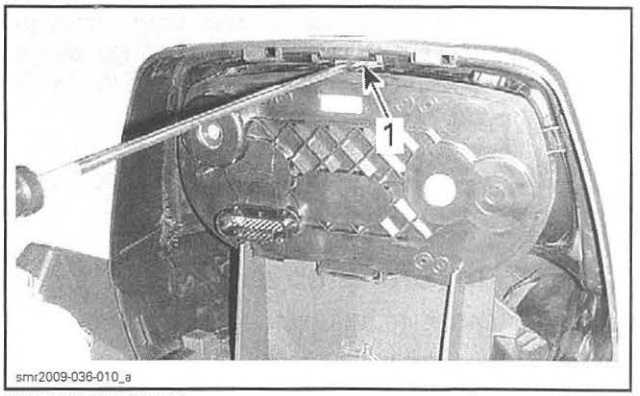

smr2009-036-010_a

GAUGE REMOVAL
1. *Insert screwdriver here*

7. Hold back of the gauge with one hand and carefully compress the retaining tab to release the information center from the gauge support.

Information Center Installation

Installation of the information center is the reverse of the removal procedure. However, pay attention to the following.

1. Apply a small amount of DIELECTRIC GREASE (P/N 293 550 004) to the gauge connector pins.
2. Reconnect gauge connector and ensure proper operation of gauge.
3. Insert and align the bottom of the gauge into the support first, then push the top into the support and ensure it properly locks into the retaining tab.

GTX, RTX and Wake Pro

4. When reinstalling the gauge support cover, first insert the top of the cover into the support. Then align the bottom of the cover with the locking tabs on the outside of the gauge support and push it in until it snaps back in place.

All Models

NOTE: If you are installing a replacement information center, refer to *INFORMATION CENTER REPLACEMENT* in this subsection.

Information Center Replacement

All Models

NOTE: Replacement information centers are delivered already programmed.

After the information center has been replaced, connect the watercraft to the latest applicable B.U.D.S. version and carry out any updates (if required). Refer to *COMMUNICATION TOOLS AND B.U.D.S.* subsection.

Once the information center has been updated (if required), select the applicable settings as described in *SETTING LANGUAGE AND UNITS OF MEASUREMENT* in this subsection.

GAUGE SUPPORT (RXT, GTX AND WAKE PRO)

Gauge Support Removal

1. Move steering to its upper most position.
2. Using a long flat screwdriver, unlatch both sides of gauge support cover.

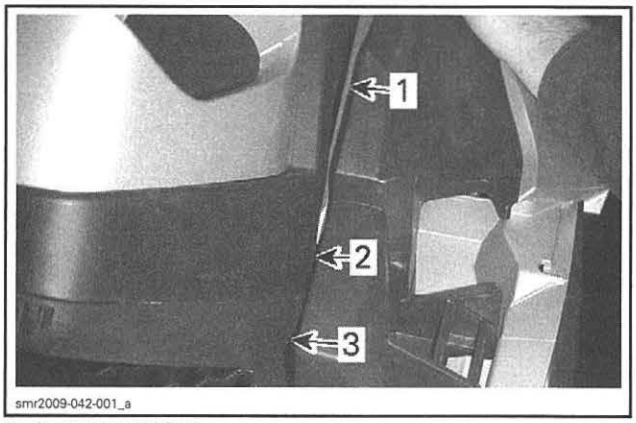

1. Long screwdriver
2. Locking tab
3. Gauge support cover

3. Remove the cover.

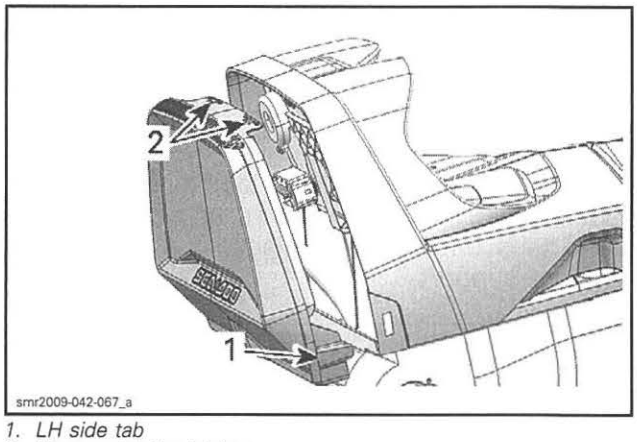

1. LH side tab
2. Upper retaining latches

4. Disconnect the gauge connector.

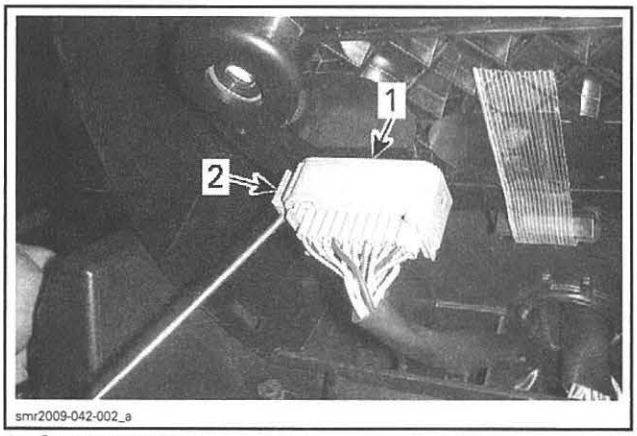

1. Gauge connector
2. Slide out gauge connector tab to unlock

5. Using a small screwdriver, unlock back end of gauge support by pushing on tabs on each side of the steering column.

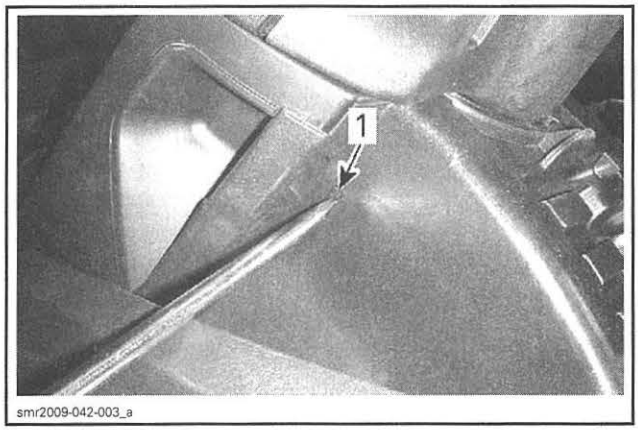

1. Inner latches

6. Remove gauge support by pulling out its forward tabs (one on each side), then pulling up on the support.

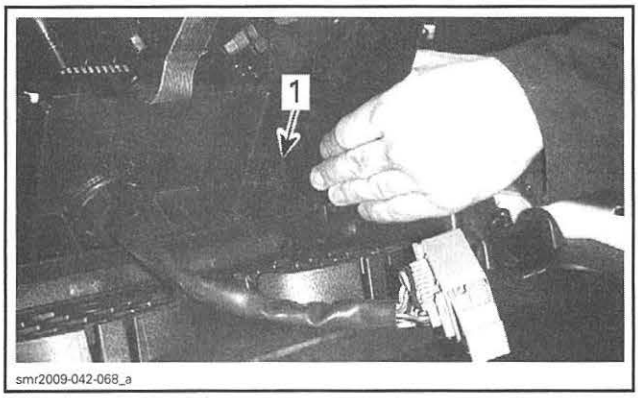

1. Pull out locking tab

Gauge Support Installation

1. Reverse the removal procedure.
2. Ensure proper operation of gauge once reconnected.

MODE/SET AND UP/DOWN ARROW BUTTONS

Overview

The MODE/SET and UP/DOWN arrow buttons assembly contains a series of 4 diodes for the MODE and SET switches, and another 4 diodes for the UP/DOWN arrow switches. Refer to *WIRING DIAGRAM* for simplified diagram of switches.

The center wire to the switches (pin C), is common to both sides of the switch assembly (somewhat like a ground wire). The other two wires (pins A and B), act as signal wires to the information center for each set of switches. They actually each form one branch of an electronic circuit within the information center.

Each diode (in circuit) drops a nominal 0.6 Vdc when conducting electricity. If the circuit current passes through all four diodes (say MODE and SET switches open), a drop of 2.4 Vdc would be measured across the 4 the diodes (pin B to pin C). This voltage drop of 2.4 Vdc measured at pin B tells the gauge the MODE and SET switches are open.

If the MODE switch is pressed, 2 diodes are bypassed. The remaining two diodes in the circuit drop 1.2 Vdc (at pin B).

If the SET switch is pressed, 1 diode is bypassed. The remaining three diodes in the circuit drop 1.8 Vdc (at pin B).

The gauge senses these voltages through pin 17 of the gauge connector, and interprets them as signals that tell it which switch is activated.

If the command signal generated by the closure of a switch concerns another module, a circuit within the gauge will translate it to CAN protocol and transmit it through the CAN bus. The applicable module will react to the command, carry out the function, and transmit the result back through the CAN bus.

The information center will use the signals from the switches and the transmitted information from the other modules, convert them to an indication, and cancel the command signal it sent out once the function has been carried out.

Command signals from the MODE and SET switches are used by the information center only.

The UP/DOWN arrow switch commands are used by the gauge for certain functions and settings. They will also be translated and sent out through the CAN bus to be used by the ECM for the CRUISE, SKI mode and SLOW SPEED functions for increasing or decreasing speed when the functions are active, and by the iBR for iBR gate positioning in SLOW SPEED mode of operation.

The UP/DOWN switches are also used for VTS trim on RXT 215, GTX 155, GTI SE 130 and 155, and WAKE models.

NOTE: The voltages stated previously vary slightly depending on the actual voltage applied to the circuit and the current flow through the diodes. When using a Fluke 115 multimeter for testing in diode test mode, the voltage and current applied by the multimeter are lower than in circuit. The quality of probe contact, the actual probes and leads, and the precision of the meter calibration will all affect the results, which will most likely be slightly lower than nominal values stated.

MODE/SET and UP/DOWN Arrow Buttons Test Using B.U.D.S.

1. Connect the watercraft to the latest applicable B.U.D.S. version. Refer to *COMMUNICATION TOOLS AND B.U.D.S.*
2. Press the START/STOP button to energize the electrical system.

NOTE: You will need to press the START button every three minutes or the electrical system will shut off.

3. Select the **Read Data** button.
4. Choose the **Monitoring** tab at the top of the page.
5. At the bottom LH side of the monitoring page, select the **Cluster** tab.

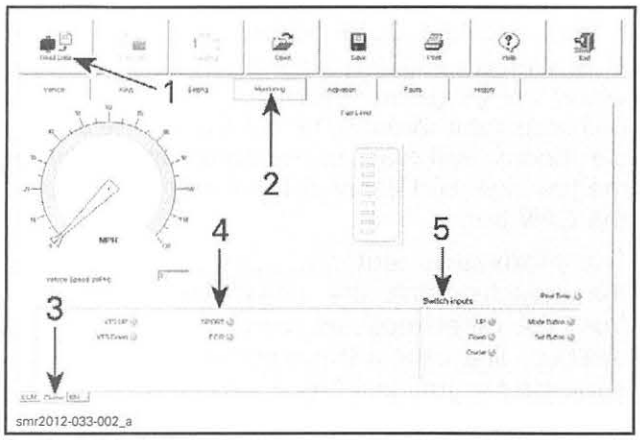

1. *Read Data button*
2. *Monitoring tab*
3. *Cluster tab*
4. *LH switch inputs field*
5. *RH switch inputs field*

6. Press each of the MODE/SET and UP/DOWN arrow buttons and look for the applicable indicator light to come on in the **Switch inputs** field on lower RH side of the cluster page (Mode, Set, Up or Down).

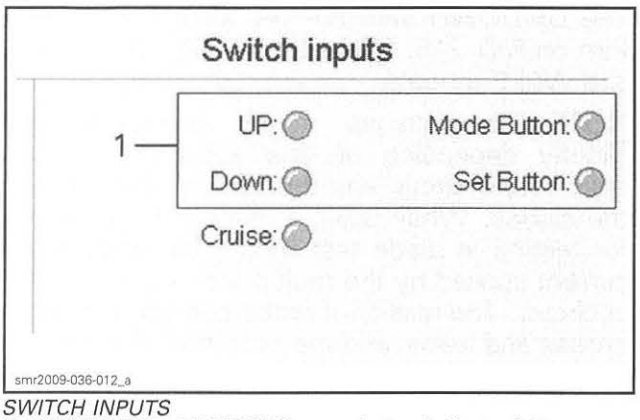

SWITCH INPUTS
1. *MODE/SET and UP/DOWN arrow button indicator lights*

If each of the gauge button indicator lights come on when the applicable switch is pressed, the problem may be related to the information center.

If one or all of the indicator lights does not come on, refer to *MODE/SET AND UP/DOWN ARROW SWITCH TEST USING A MULTIMETER.*

MODE/SET and UP/DOWN Switch Test Using a Multimeter

GTI and WAKE

1. Remove the information center from the console, refer to *INFORMATION CENTER REMOVAL (GTI AND WAKE)* in this subsection.

RXT, GTX and WAKE PRO

2. Remove the gauge support cover, refer to *INFORMATION CENTER REMOVAL (RXT, GTX AND WAKE PRO)* in this subsection.

All Models

3. Disconnect the gauge connector.

NOTICE **Pull connector lock out. Do not twist the screwdriver.**

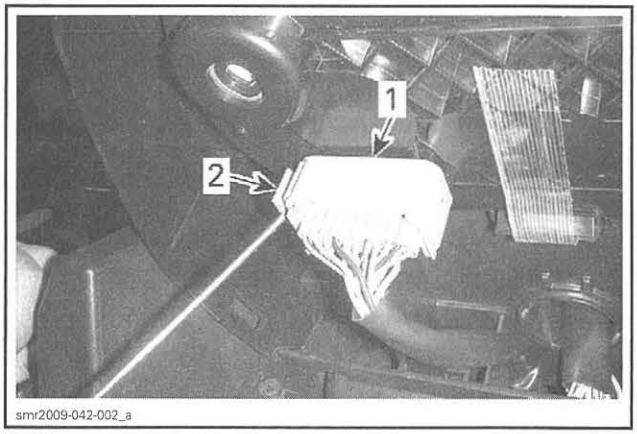

1. *Gauge connector*
2. *Pull out to unlock connector*

4. Set the FLUKE 115 MULTIMETER (P/N 529 035 868) to the diode test function.

NOTE: It is important to set the multimeter to the diode check function when testing the MODE/SET and UP/DOWN arrow switches as it contain diodes.

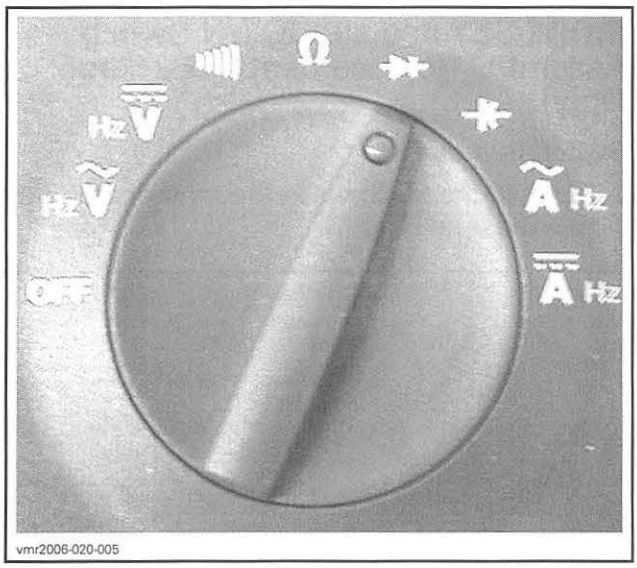

vmr2006-020-005

5. Test the MODE/SET and UP/DOWN arrow switches as per following tables.

MODE/SET SWITCH TEST			
SWITCH POSITION	FLUKE 115	GAUGE CONNECTOR	VOLTAGE
Switch released	RED lead BLACK lead	Pin 17 Pin 18	Approx. 2 Vdc
	BLACK lead RED lead	Pin 17 Pin 18	OL
MODE depressed	RED lead BLACK lead	Pin 17 Pin 18	Approx. 1.1 Vdc
	BLACK lead RED lead	Pin 17 Pin 18	OL
SET depressed	BLACK lead RED lead	Pin 17 Pin 18	Approx. 1.6 Vdc
	BLACK lead RED lead	Pin 17 Pin 18	OL

UP/DOWN ARROW SWITCH TEST			
SWITCH POSITION	FLUKE 115	GAUGE CONNECTOR	VOLTAGE
Switch released	RED lead BLACK lead	Pin 16 Pin 18	Approx. 2 Vdc
	BLACK lead RED lead	Pin 16 Pin 18	OL
UP depressed	RED lead BLACK lead	Pin 16 Pin 18	Approx. 1.1 Vdc
	BLACK lead RED lead	Pin 16 Pin 18	OL
DOWN depressed	RED lead BLACK lead	Pin 16 Pin 18	Approx. 1.6 Vdc
	BLACK lead RED lead	Pin 16 Pin 18	OL

NOTE: Remember that each diode should drop approximately 0.6 Vdc when positively biassed, and read as an OL (open circuit) when negatively biassed (leads reversed).

When measuring between pins 17 and 18, or 16 and 18, if an OL is obtained with both positive and negative diode biassing, test the continuity of each wire between the gauge and switch assembly. If continuity is good, replace the switch assembly.

If any reading is significantly different than specified, carry out the same test at the switch connector, refer to the wiring diagram. If you obtain the same results, replace the switch assembly.

If voltages measured on every switch are as specified (or very close to it), the switches and the wiring harness are good. The fault may be within the gauge. Replace the gauge and carry out a new *MODE/SET AND UP/DOWN TEST USING B.U.D.S.* to ensure the problem is solved.

MODE/SET and UP/DOWN Switch Assembly Replacement (Except X Package)

1. Remove steering cover, refer to *STEERING AND O.T.A.S.* subsection.
2. Disconnect connector from switch assembly.

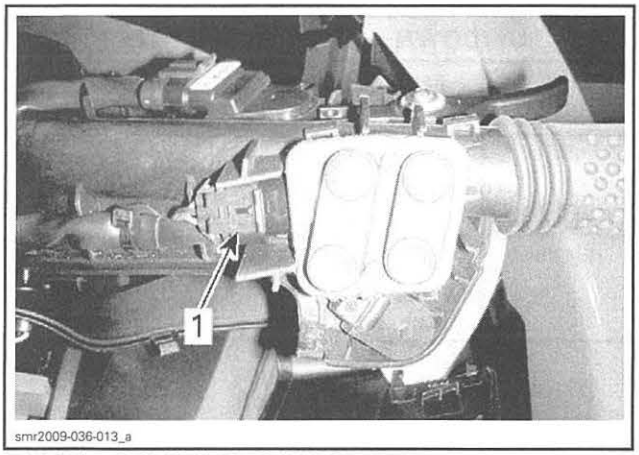

TYPICAL - GTX LIMITED iS ILLUSTRATED
1. MODE/SET and UP/DOWN switch connector

3. Remove switch assembly from support by lifting it off the support.
4. As applicable, ensure wiring from cruise switch is properly inserted in slot provided before installing MODE/SET and UP/DOWN arrow switch assembly.

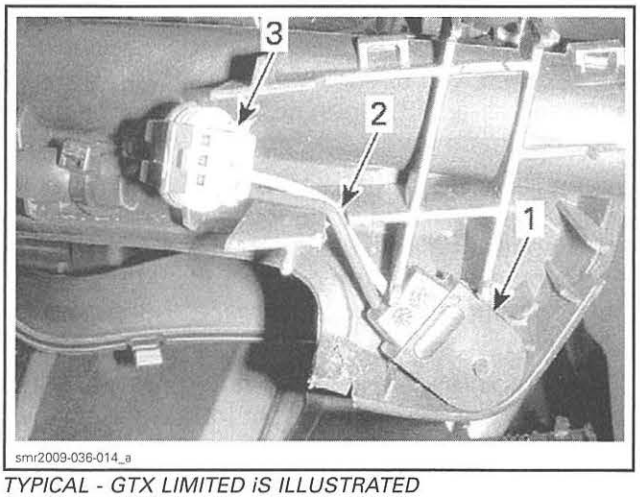

TYPICAL - GTX LIMITED iS ILLUSTRATED
1. Cruise switch
2. Wiring in slot provided in support
3. MODE/SET and UP/DOWN arrow switch connector

5. Apply a small amount of DIELECTRIC GREASE (P/N 293 550 004) on switch contact pins.
6. Install connector on new switch assembly.
7. Insert switch assembly in switch support.
8. Install steering cover, refer to *STEERING AND O.T.A.S.*

MODE/SET and UP/DOWN Switch Assembly Replacement (X Package Only)

Switch Removal

1. Remove the 2 screws in the front of the upper handlebar housing.

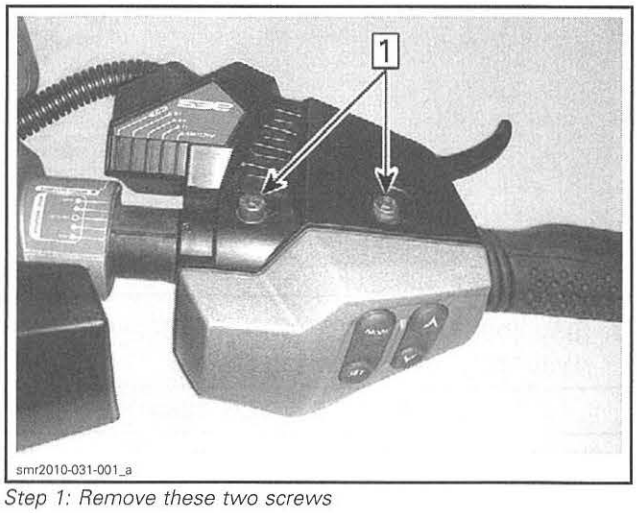

Step 1: Remove these two screws

2. Remove the screw at back of the handlebar.

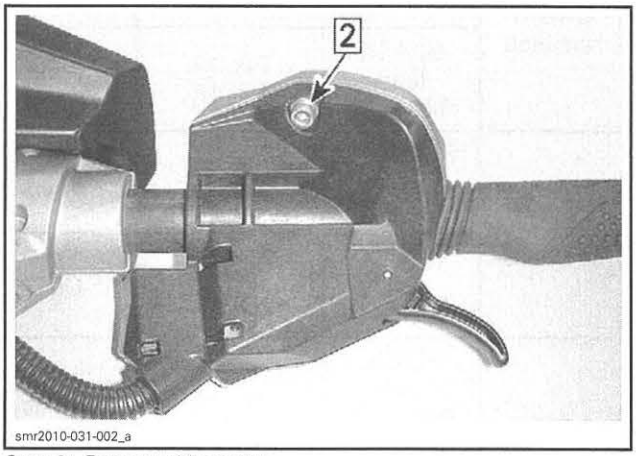

Step 2: Remove this screw

NOTICE **Do not try to pull the cover off the housing at this time or damage to the cover will occur.**

3. Take hold of the housing cover to prevent it from falling off the handlebar when unlocking the upper housing in the following step.
4. Using a small screwdriver, unlock the tab that retains the upper housing and pull the upper housing off.

NOTICE **As you remove the upper housing, hold on to the housing cover to prevent it from falling off the handlebar.**

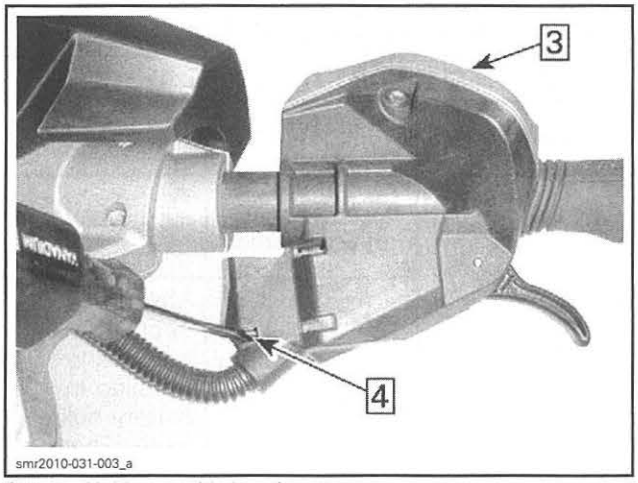

Step 3: Hold on to this housing cover
Step 4: Unlock this tab

5. Remove the housing cover from the handlebar.

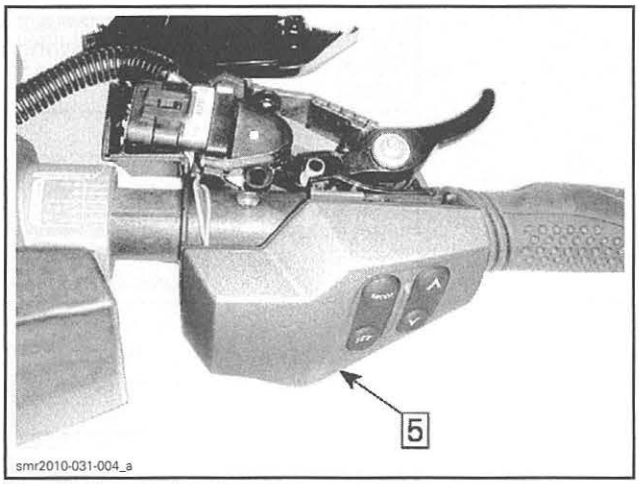

Step 5: Remove housing cover

6. Remove switch from handlebar housing.
7. Remove connector from switch.

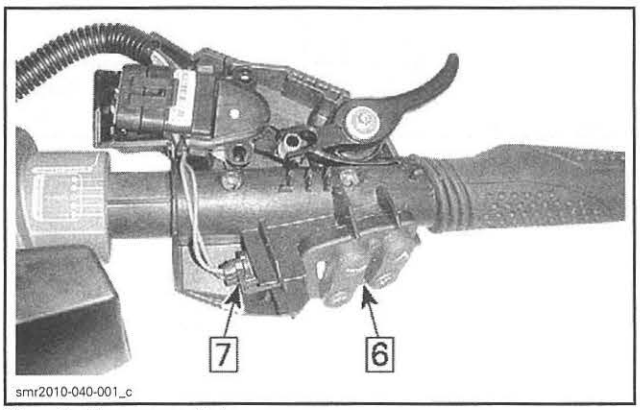

Step 6: Remove switch
Step 7: Remove connector

Switch Installation

Installation is the reverse of the removal procedure however, pay attention to the following.

1. Install connector on switch assembly.
2. Insert switch assembly in handlebar housing.
3. Ensure proper wire routing.
4. Ensure proper positioning of corrugated conduit.

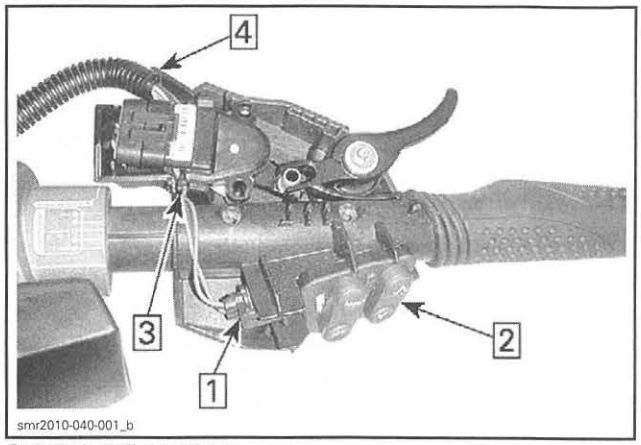

Step 1: Install connector
Step 2: Insert switch in handlebar housing
Step 3: Ensure proper wire routing
Step 4: Ensure proper positioning of corrugated conduit

5. Ensure engagement of housing cover retaining tabs.
6. Ensure engagement of upper housing locking tabs.

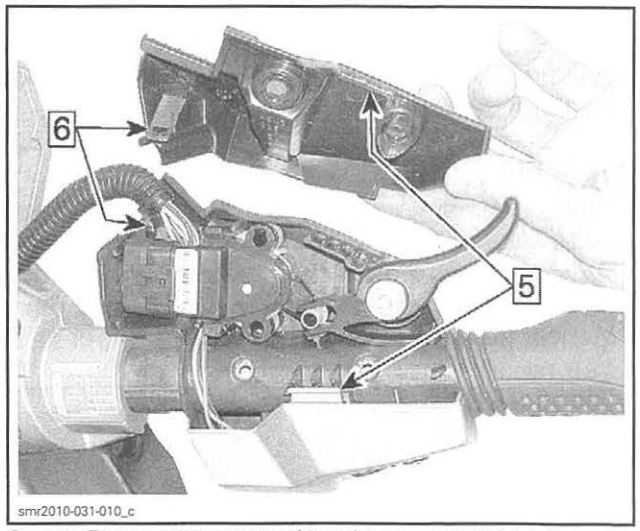

Step 5: Ensure engagement of housing cover retaining tabs
Step 6: Ensure engagement of upper housing locking tabs

7. Position the upper housing on the handlebar housing.
8. Ensure proper engagement of the upper housing and cover tabs.

9. Install the three retaining screws for the upper housing and tighten them as specified.

UPPER SWITCH HOUSING SCREW TORQUE
2 N•m (18 lbf•**in**)

10. Connect watercraft to the latest applicable B.U.D.S. version, refer to *COMMUNICATION TOOLS AND B.U.D.S.* subsection.
11. Ensure there are no fault codes, refer to *DIAGNOSTIC AND FAULT CODES* subsection.
12. Ensure proper operation of throttle lever and switch assembly.

WATER TEMPERATURE SENSOR

The water temperature sensor is located within the iBR module that is part of the iBR actuator. It cannot be tested or replaced separately.

Water from the jet pump passes through the iBR actuator where the sensor measures its temperature, generating a signal that is interpreted by the iBR module. The iBR module then sends the information through the can-bus to the information center that translates it into a temperature indication.

If the temperature sensor is defective, the temperature indication will not be displayed and a WATER TEMP SENSOR DEFECTIVE message will scroll in the multifunction display.

A lake water temperature sensor fault code should be generated if the sensor is defective. Refer to *DIAGNOSTIC AND FAULT CODES*.

If the lake water temp sensor is defective, replace the iBR actuator.

DEPTH SOUNDER

⚠ WARNING

Never use the depth gauge as a warning device to ride in shallow water. Use it as a navigation guide only. Not to be used to get precise navigation data.

Depth Sounder Troubleshooting

DEPTH SOUNDER TROUBLESHOOTING		
SYMPTOM	POSSIBLE CAUSE	REMEDY
Nothing is displayed in the information center	Depth sounder not connected.	Properly connect depth sounder.
	Depth sounder not properly installed.	Make sure depth sounder is properly installed in battery holder base. There must be no air gap between hull and silicone pad(s).
	12 Vdc wire or ground wire to depth sounder open.	Check fuse 3 in FB1 and wiring harnesses.
	Problem with communication link wires.	Check WHITE/BLACK and WHITE/RED wires to CAN bus-bars in FB1.
- - - - (ft or m) is displayed	Watercraft is not in water.	Launch watercraft in water and recheck.
	There is air between silicone pad and depth sounder or between depth sounder and battery holder base.	Remove depth sounder. Replace silicone pad.
	Depth sounder is defective.	Try a new depth sounder.

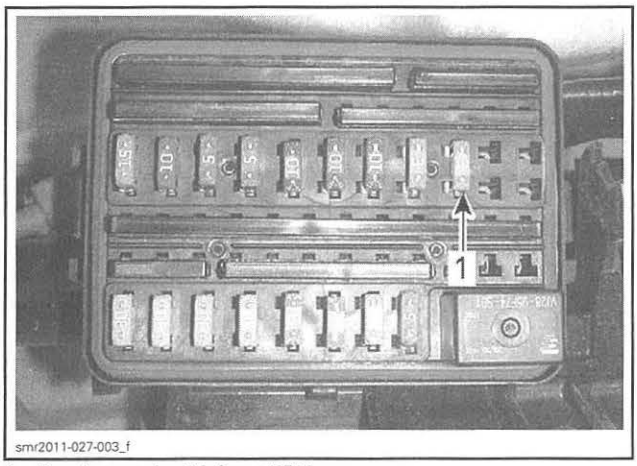

1. Depth sounder 3A fuse (FB1)

Depth Sounder Removal

1. Open the boarding platform.

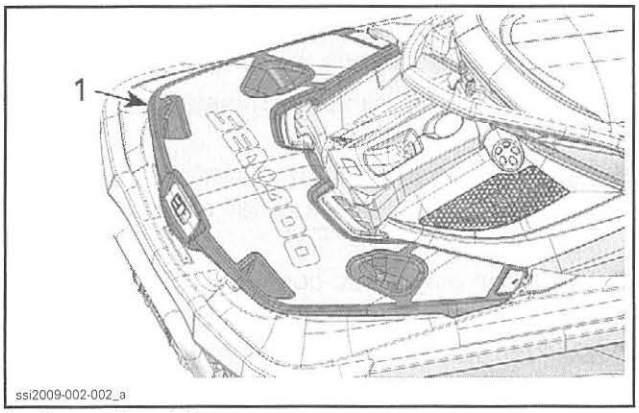

1. Re-boarding platform

2. Remove the starboard (RH) storage bin.

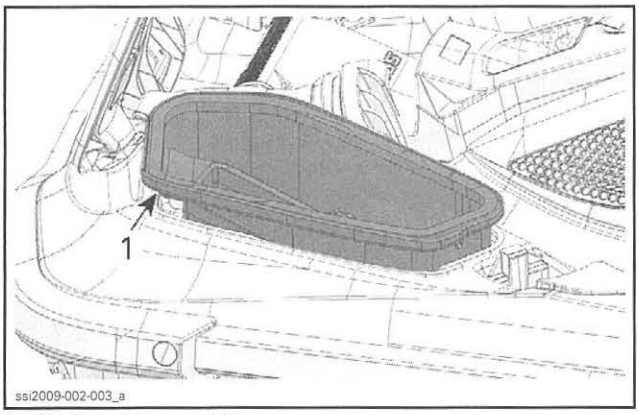

1. Starboard storage bin

3. Disconnect the diagnostic connector from its holder.

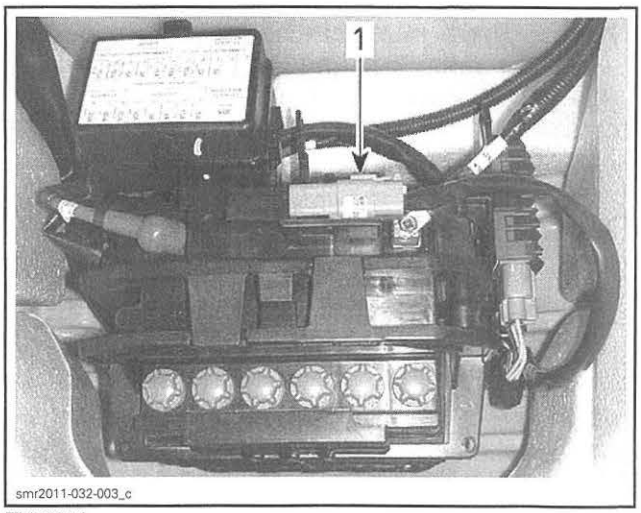

TYPICAL
1. Diagnostic connector

4. Remove the electrical component support from the battery holder, refer to *CHARGING SYSTEM*.
5. Remove the battery (with holder) from the watercraft, refer to *CHARGING SYSTEM*.

⚠ WARNING

Always disconnect the battery cables exactly in the specified order, BLACK (-) battery cable first then the RED (+) cable last.

6. Unlock the depth sounder clocking tabs from the battery holder base and pull the depth sounder out from the base.

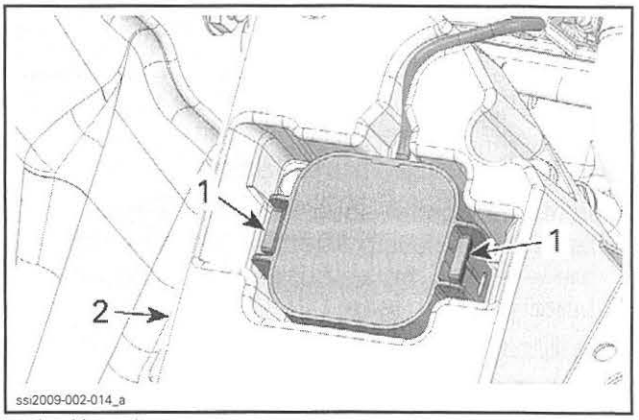

1. Locking tabs
2. Battery holder base

7. Disconnect the depth sounder connector from the wiring harness.

Depth Sounder Inspection

Ensure the silicone pad is in good condition.

NOTE: There must not be any air trapped between the bottom of the depth sounder and the bilge. Otherwise, the sounder will not function correctly.

If the silicone pad is damaged, replace it.

Depth Sounder Silicone Pad Replacement

1. Place the flat side of the depth sounder on a level surface.
2. Remove the old silicone pad from the bottom of the depth sounder.
3. Clean the concave surface of depth sounder.
4. Remove both protectors from the silicone pad.
5. Apply silicone pad on depth sounder.

NOTICE **Make sure do not trap air between silicone pad and depth sounder. Otherwise, the device will not work.**

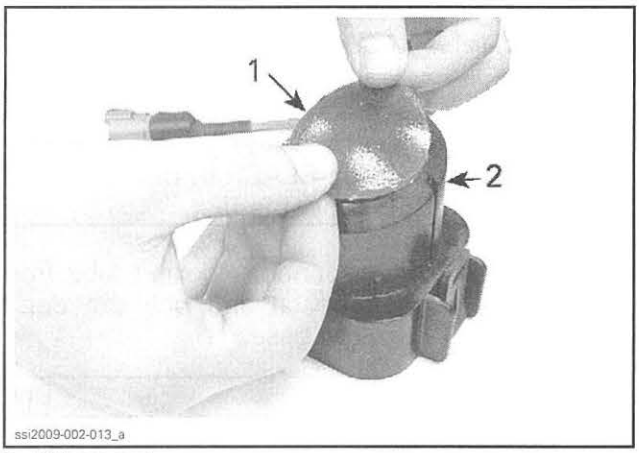

1. Silicone pad
2. Depth sounder

Depth Sounder Installation

1. Insert the depth sounder in the battery holder base while paying attention to the position of the wiring on the sounder with the groove in the battery holder base.
2. Press firmly on the depth sounder until both locking tabs are locked into the base.
3. Connect the sounder connector to the wiring harness and route the wiring in the groove provided in the battery holder base.

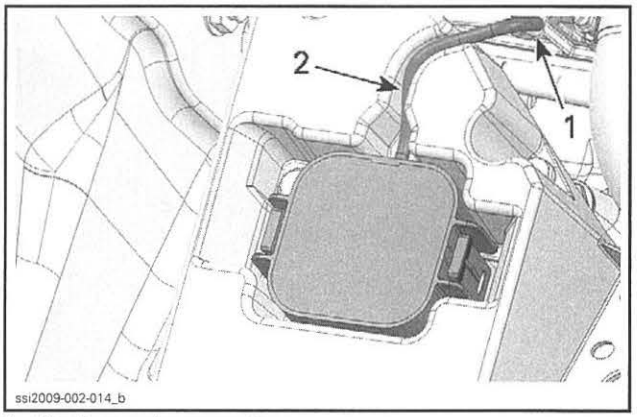

1. Depth sounder connector
2. Wiring harness

4. After installation:
   - 4.1 Try pulling the sounder out to ensure it is properly locked in the battery support base.
   - 4.2 Try pushing on depth sounder. You must feel a resistance (no air gap).

NOTE: An air gap can be eliminated by adding an additional silicone pad.

5. Install the battery and electrical component support in the reverse order of removal, refer to *CHARGING SYSTEM*.
6. Install the diagnostic connector in its holder.
7. Carry out the following procedure: *TESTING DEPTH SOUNDER OPERATION*.

Testing Depth Sounder Operation

1. Press START/STOP button to activate gauge.
2. Confirm the depth sounder icon is active in gauge.

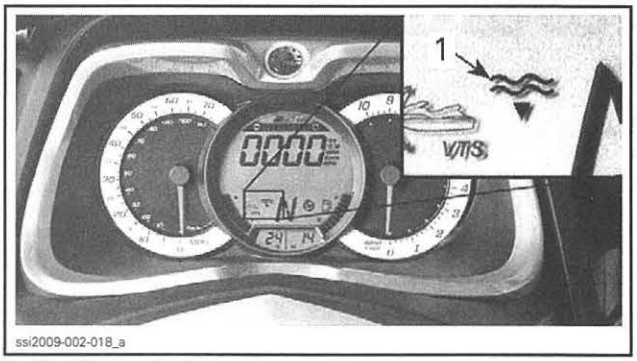

1. Depth sounder icon

3. If icon is not active, check in BUDS that icon box is checked.

NOTE: When watercraft is not in water, the icon is active but there is no reading. To verify proper operation, launch watercraft in water and compare depth indication with actual depth.

STEERING AND O.T.A.S.

SERVICE TOOLS

Description	Part Number	Page
DIAGNOSTIC HARNESS	529 036 188	451
FLUKE 115 MULTIMETER	529 035 868	451
STEERING CABLE TOOL	295 000 145	444

SERVICE TOOLS – OTHER SUPPLIER

Description	Part Number	Page
MODIFIED WRENCH 22 mm (7/8 in) x 100 mm (4 in)	none	435–436

SERVICE PRODUCTS

Description	Part Number	Page
LOCTITE 243 (BLUE)	293 800 060	439, 441
LOCTITE 567 (PIPE SEALANT)	293 800 013	445
XPS SYNTHETIC GREASE	293 550 010	443

STEERING COLUMN AND CABLE

GTS, GTI, GTR and WAKE

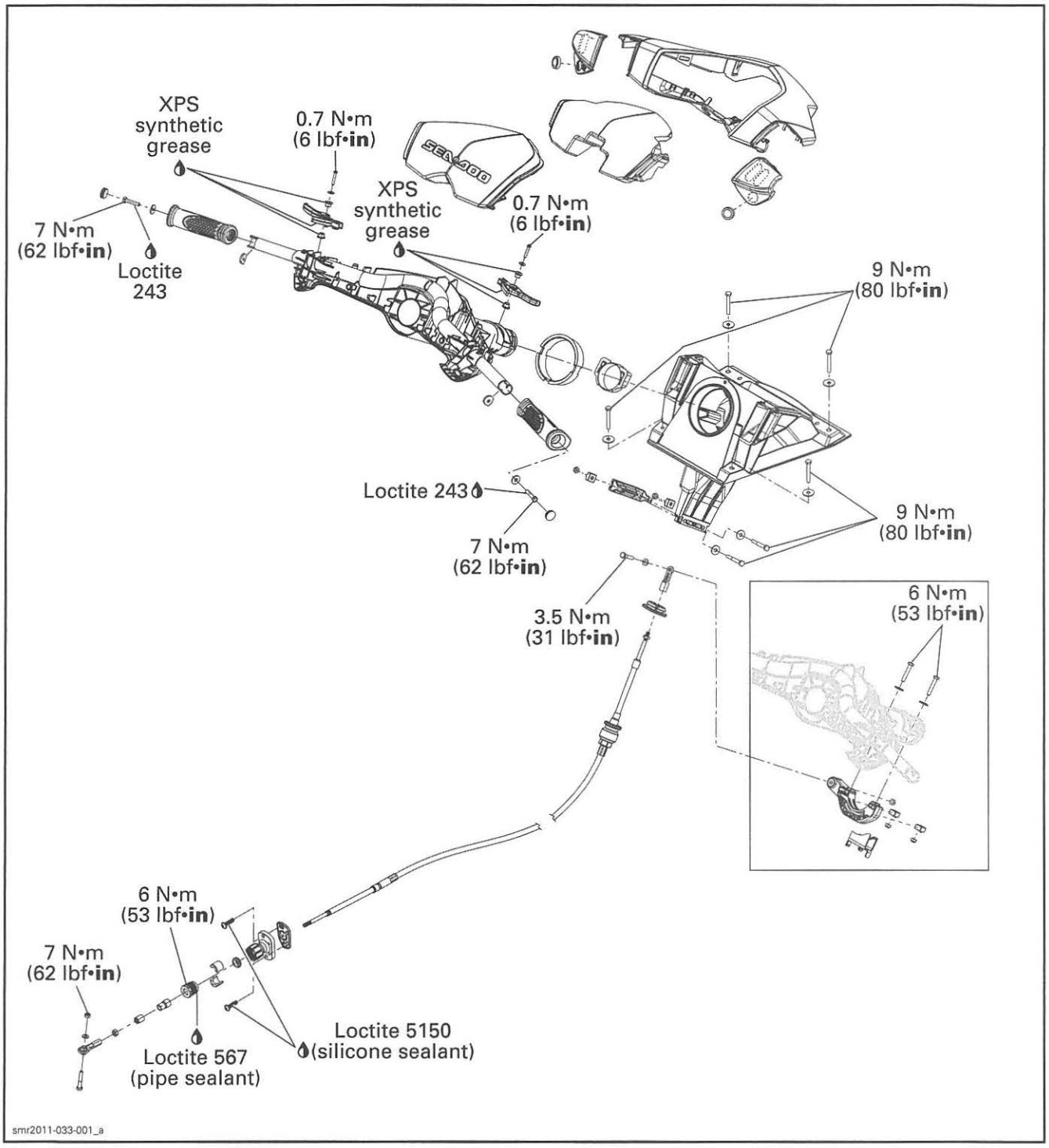

STEERING COLUMN

GTX, GTX iS, RXT, RXT iS and Wake Pro

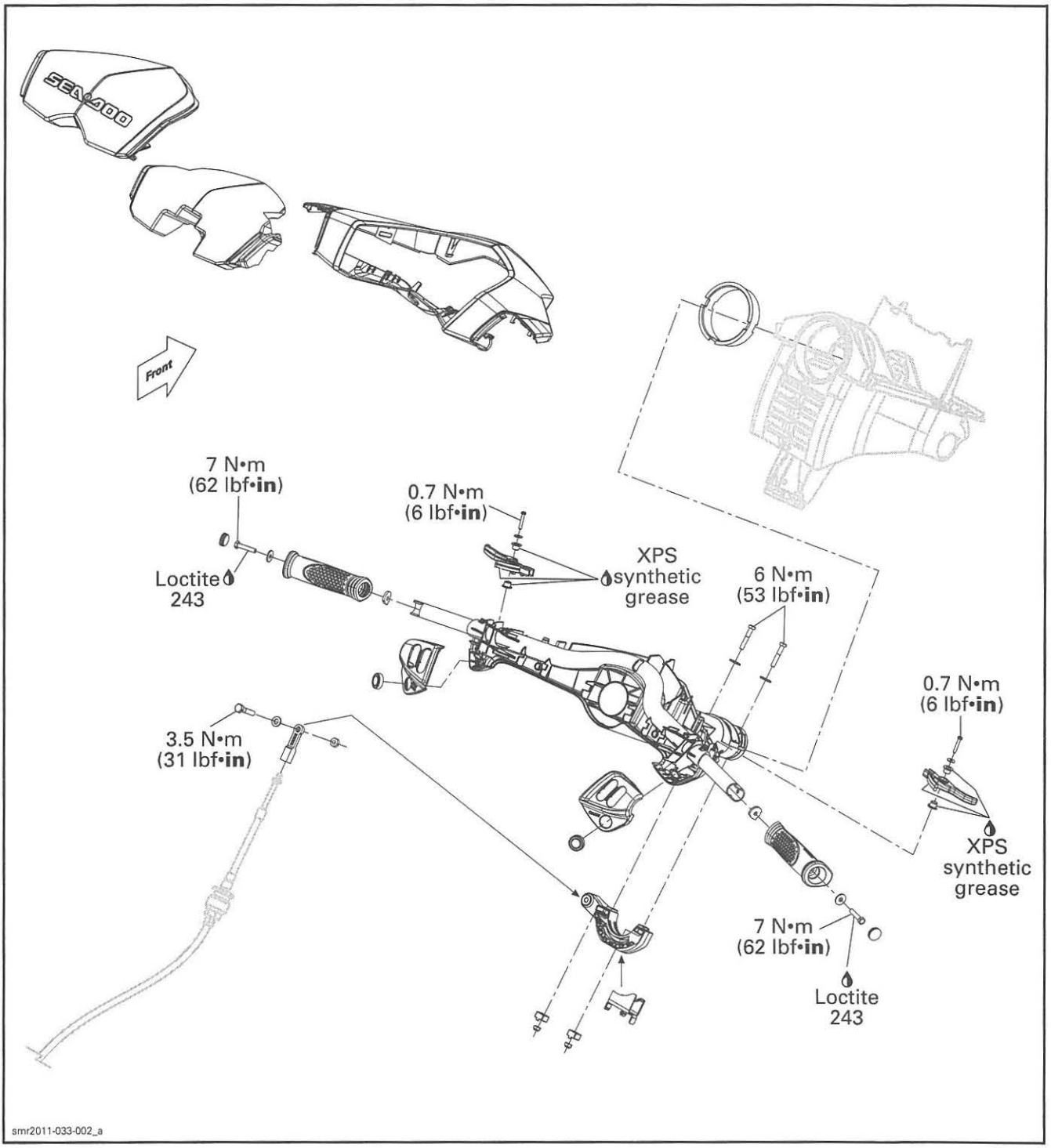

STEERING COLUMN

RXT-X, RXT-X aS

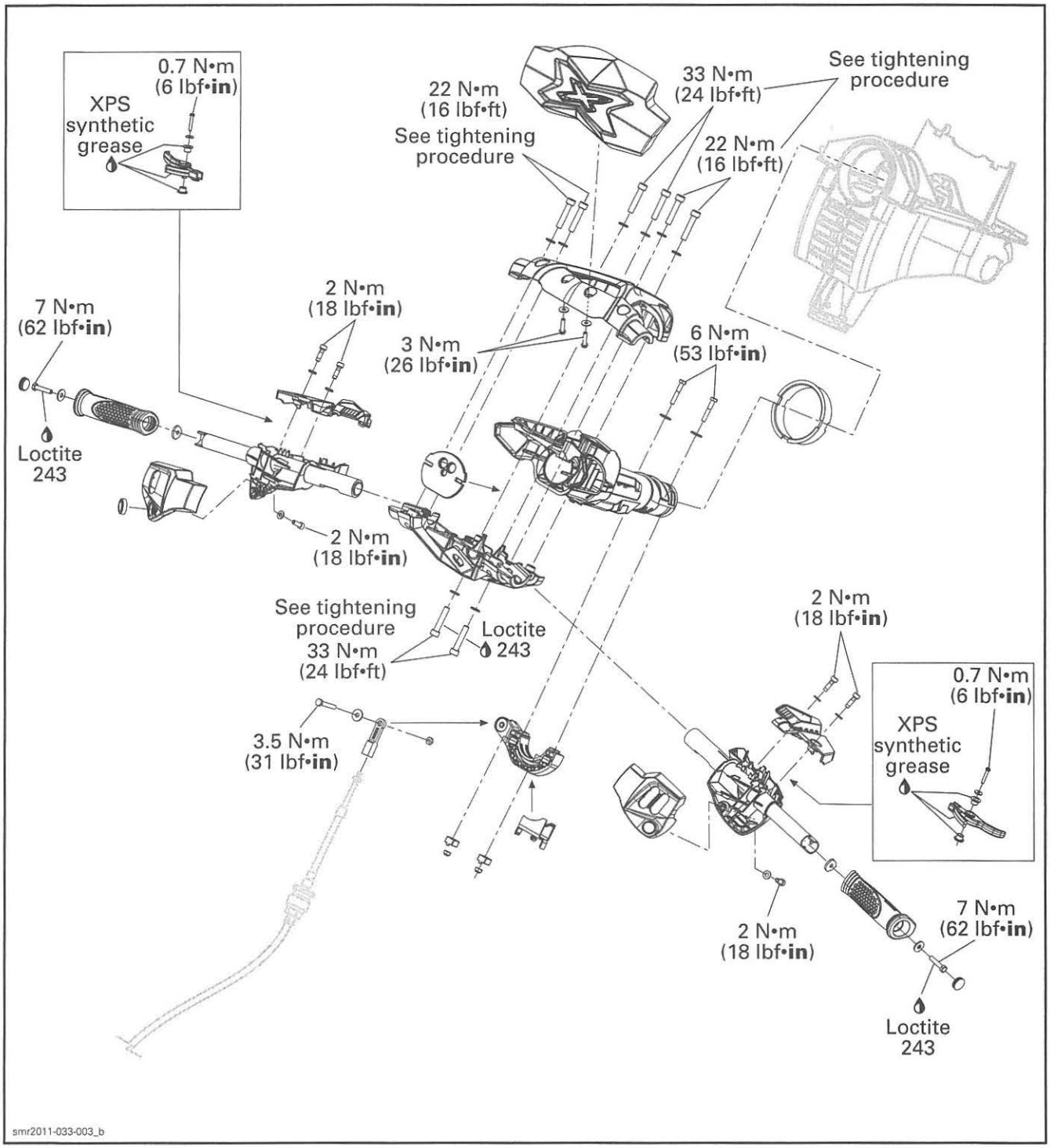

STEERING COLUMN AND CABLE

RXP-X Series

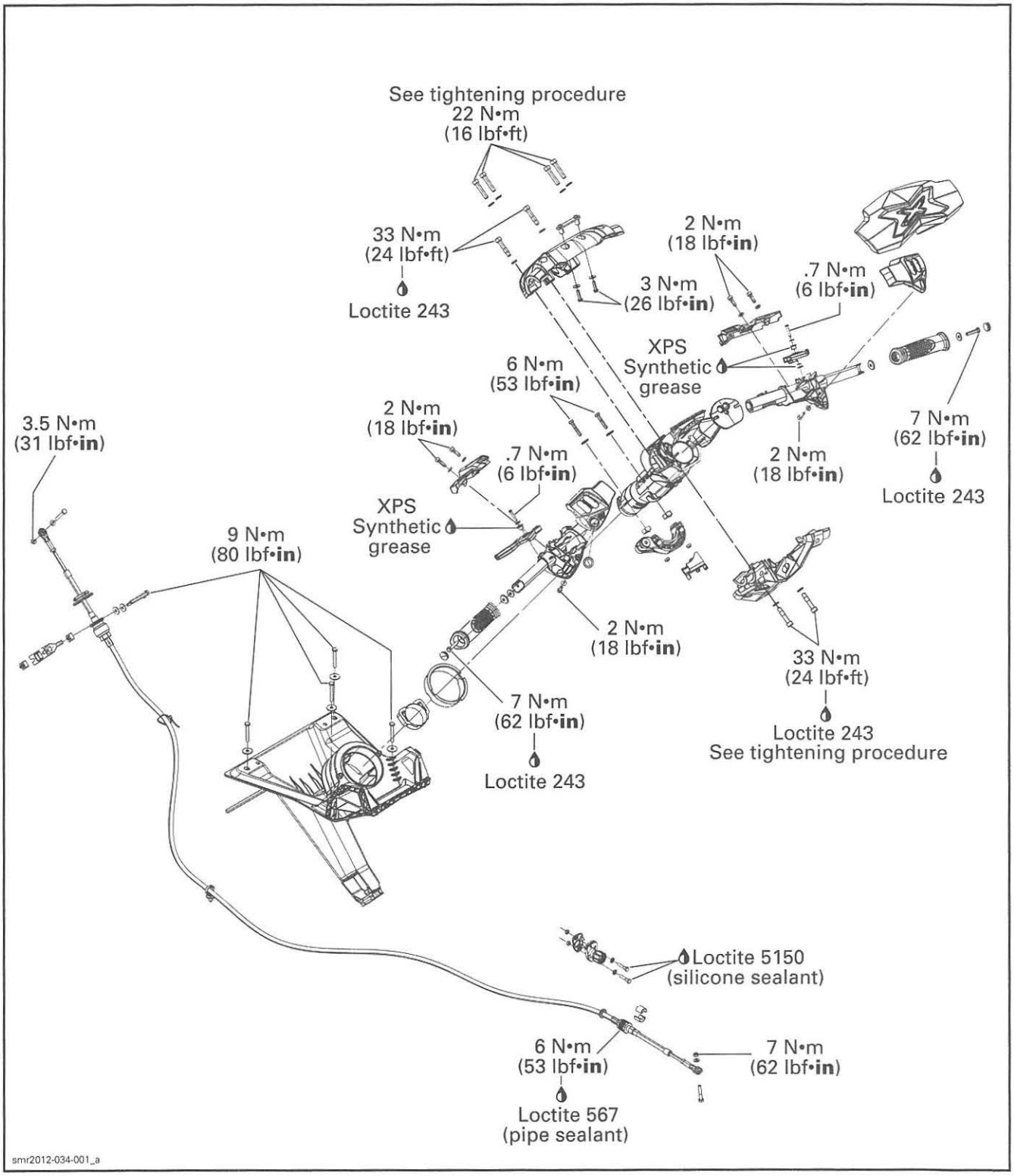

STEERING COLUMN SUPPORT AND CABLE

GTX/RXT Series and WAKE PRO

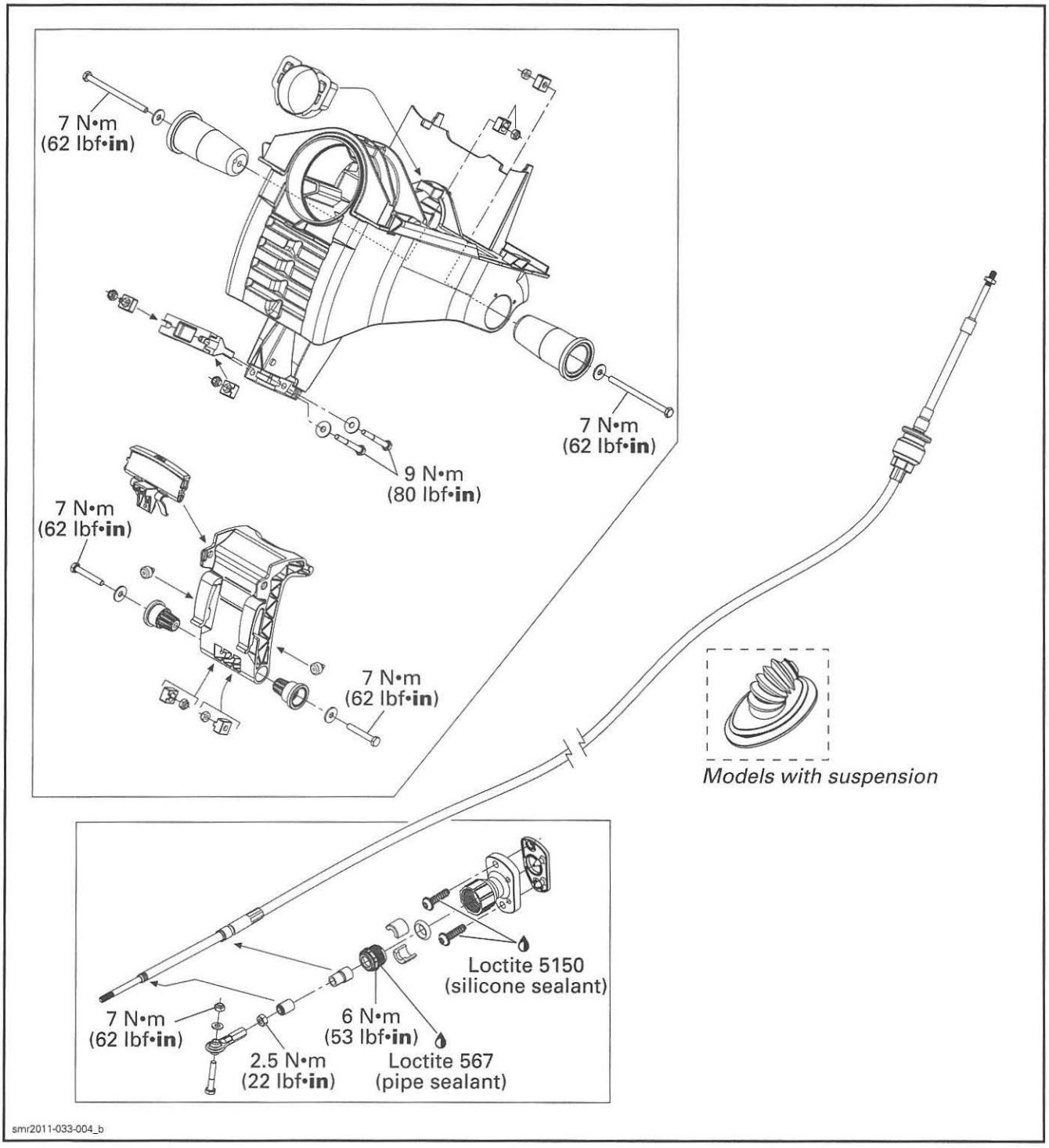

GENERAL

SYSTEM DESCRIPTION (O.T.A.S.)

The O.T.A.S. (Off-Throttle Assisted Steering) provides additional maneuverability in off-throttle situations.

The system uses a pair of magnets attached to the steering column and a Hall effect switch attached to the steering column support.

When activated by a magnet, the O.T.A.S. switch sends a signal to the ECM.

The ECM activates a pre-programmed RPM setting when the driver initiates a full turn after releasing throttle lever. The engine RPM is controlled by the Intelligent Throttle Control (iTC).

The O.T.A.S. system is activated in the following conditions:

- The engine speed must be above 4000 RPM for at least 1.5 second (approximately).
- The throttle lever must be released completely.
- The steering must be fully turned within approximately 4 seconds after throttle release.

The O.T.A.S. will stay activated for a random period of time as long as the O.T.A.S. switch is closed.

O.T.A.S. will be deactivated if:

- The throttle is reapplied, or
- The steering is turned sufficiently to open the O.T.A.S. switch for more than one second.

ADJUSTMENT

STEERING ALIGNMENT

Models without Suspension

Work from engine compartment to reach adjustment nut.

1. Loosen steering cable clamp bolts. Do NOT remove bolts.

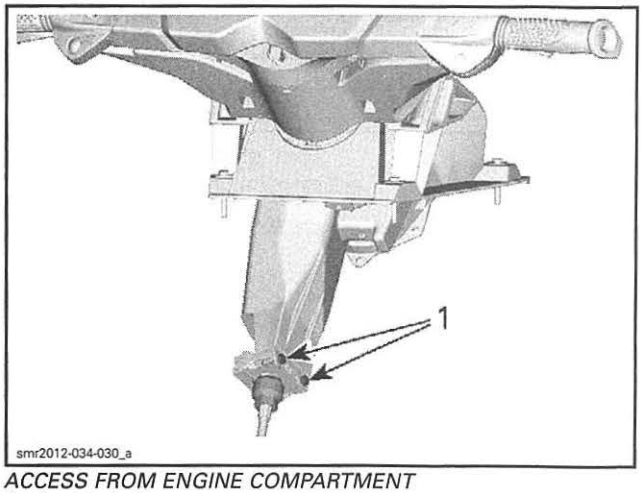

ACCESS FROM ENGINE COMPARTMENT
1. Loosen bolts

2. Turn adjustment nut 1 turn at a time in the direction shown in following table.

REQUIRED TOOL
MODIFIED WRENCH 22 mm (7/8 in) x 100 mm (4 in) (P/N none)

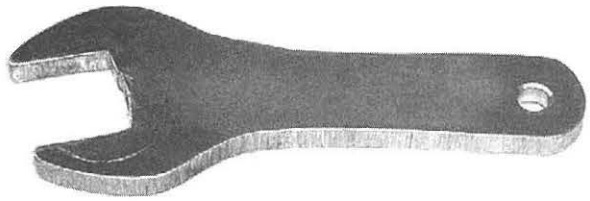

ACCESS FROM ENGINE COMPARTMENT	
WATERCRAFT BEHAVIOR	WHAT TO DO
Pulls on left side	Turn steering cable adjustment nut as shown 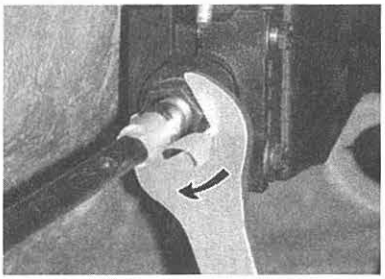
Pulls on right side	Turn steering cable adjustment nut as shown 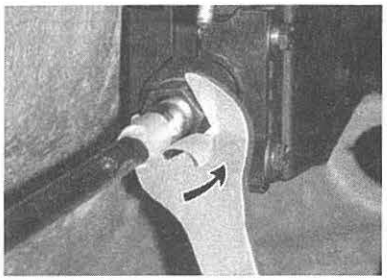

3. Tighten steering cable clamp bolts to specification.

TIGHTENING TORQUE
6 N•m (53 lbf•**in**)

4. Test watercraft.
5. Readjust adjustment nut as necessary.

Models with Suspension

Set suspension to its maximum UP position or safely lift.

Work from front storage compartment to reach adjustment nut.

1. Loosen steering cable clamp bolts. Do NOT remove bolts.

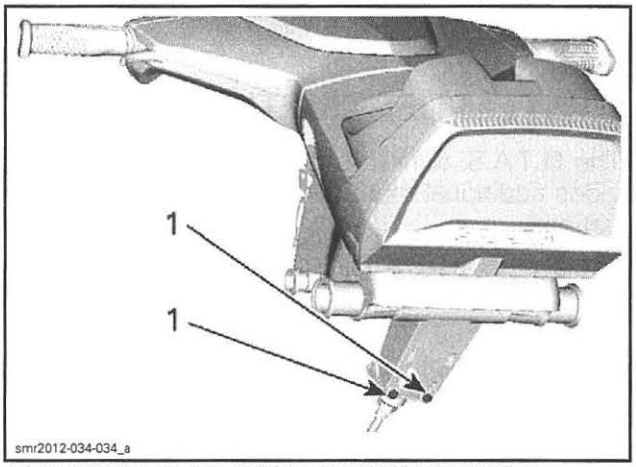

ACCESS FROM FRONT STORAGE COMPARTMENT
1. Loosen bolts

2. Turn adjustment nut 1 turn at a time in the direction shown in following table.

REQUIRED TOOL
MODIFIED WRENCH 22 mm (7/8 in) x 100 mm (4 in) (P/N none)
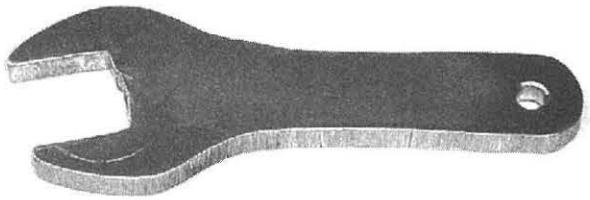

ACCESS FROM FRONT STORAGE COMPARTMENT	
WATERCRAFT BEHAVIOR	WHAT TO DO
Pulls on left side	Turn steering cable adjustment nut as shown 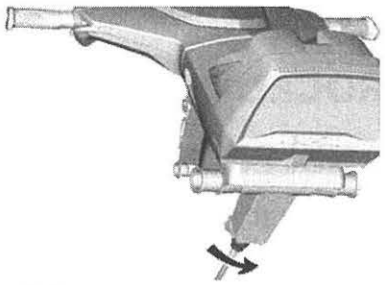
Pulls on right side	Turn steering cable adjustment nut as shown 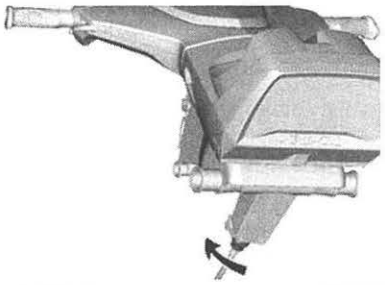

3. Tighten steering cable clamp bolts to specification.

TIGHTENING TORQUE
6 N•m (53 lbf•**in**)

4. Test watercraft.
5. Readjust adjustment nut as necessary.

ADJUSTABLE ERGONOMIC STEERING (AES)

Models with AES Steering

The handlebar may be adjusted to driver preference by extending and rotating the handlebar extension tubes.

To adjust, carry out the following steps:

1. Loosen the screws (2 each side) that secure the handlebar extension tubes.

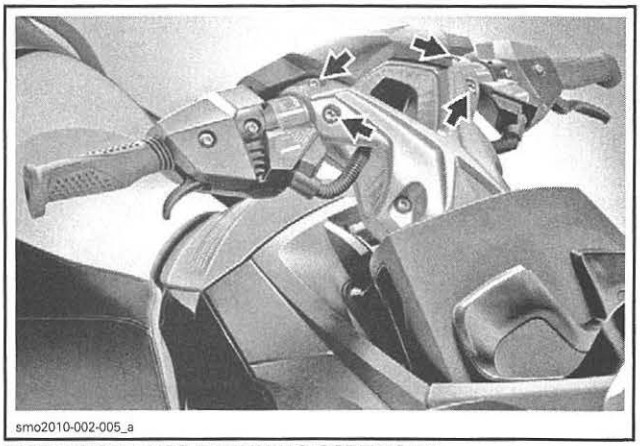

EXTENSION TUBE RETAINING SCREWS (4)

2. Pull out or push in the handlebar grips to adjust handlebar width.

NOTE: The handlebar width factory set position is fully closed. The handlebar width may be increased by 2.5 cm (1 in) each side.

3. Rotate the handlebar grips to the desired position of the controls.

NOTE: Rotating the handlebar grips rotates the handlebar extension tubes and controls. The extension tubes may be rotated plus or minus 18° from the factory set position.

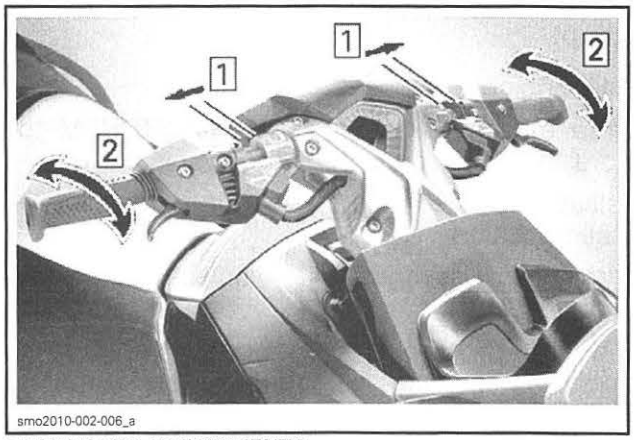

ERGONOMIC ADJUSTMENTS
Step 1: Adjust handlebar width
Step 2: Adjust angular position of controls

4. Using the index marks and scales on each side of the handlebar, ensure identical width and angular position of both handlebar extension tubes.

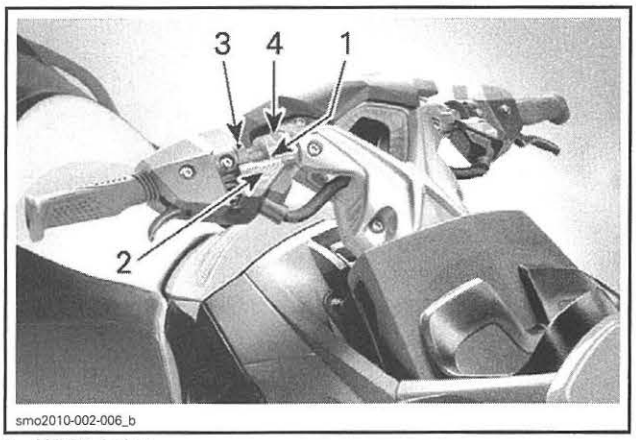

1. Width index
2. Width scale
3. Angular position index
4. Angular position scale

5. Torque handlebar retaining screws to 9 N•m (80 lbf•**in**).

INSPECTION

O.T.A.S. OPERATION

This test is to be performed with the watercraft in the water (test tank or on a trailer).

NOTICE **If the test is performed on a trailer, ensure no debris or rocks can damage the jet pump.**

Start engine.

Raise engine speed higher than 4000 RPM for more than 1 second.

Release throttle while steering is in the straight ahead position.

Within 1 to 3 seconds, turn handlebar all the way to one side.

The O.T.A.S. should come on by keeping or increasing engine speed to approximately 3000 RPM.

Then, engine speed will gradually decrease to idle speed within approximately 5 seconds.

Repeat test for the other side.

If the engine does not behave as described, carry out the *O.T.A.S. SWITCH TEST WITH B.U.D.S.*

TROUBLESHOOTING

DIAGNOSTIC TIPS

Check fault codes as a first troubleshooting step.

If O.T.A.S. works when handlebar is turned on one side only, check:

- Magnets condition
- If magnets and switch are securely installed.

To confirm is O.T.A.S. is functional, carry out *O.T.A.S. OPERATION* in this subsection. If it is not possible, carry out *O.T.A.S. SWITCH TEST WITH B.U.D.S.*

PROCEDURES

HANDLEBAR GRIP

Handlebar Grip Removal

To remove handlebar grip, remove the cap, then the retaining screw.

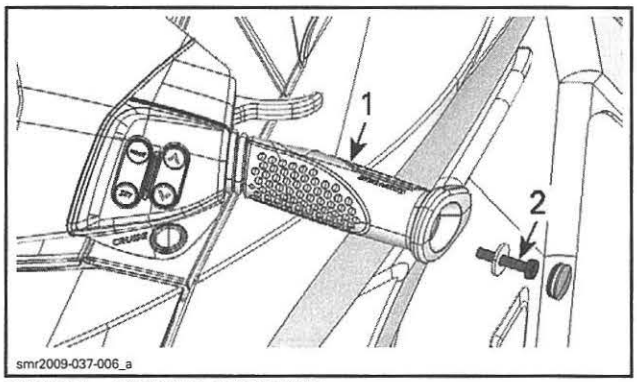

TYPICAL - GTX LTD iS SHOWN
1. Handlebar grip
2. Handlebar grip screw

Pull out handlebar grip and remove grip insert from handlebar.

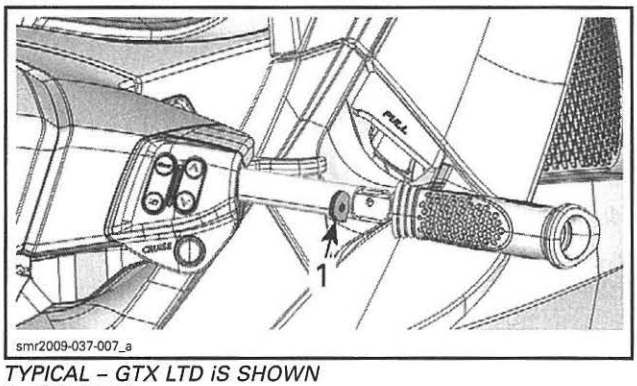

TYPICAL - GTX LTD iS SHOWN
1. Grip insert

NOTE: Verify grip insert for damage.

Handlebar Grip Installation

When installing the grip insert in the handlebar, ensure that it is properly inserted in the slot at the end of the handlebar tubing.

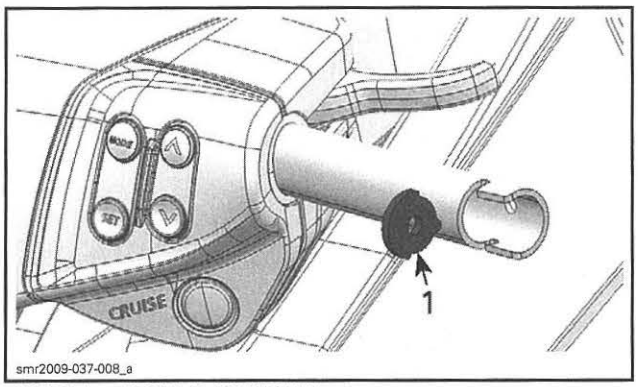

TYPICAL – GTX LTD iS SHOWN
1. Grip insert

Install handlebar grip on handlebar matching it to the notch in the handlebar.

Apply LOCTITE 243 (BLUE) (P/N 293 800 060) on screw threads (or use new self-locking screws).

Install flat washer and handlebar grip screw.

NOTICE **Ensure to install flat washer otherwise screw will damage the grip end.**

Torque handlebar grip screw to 7 N•m (62 lbf•**in**).

Install cap.

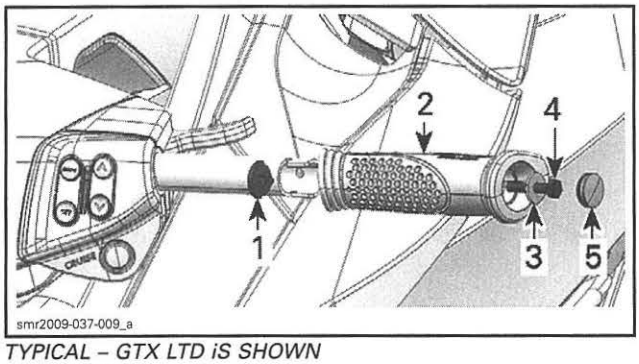

TYPICAL – GTX LTD iS SHOWN
1. Grip insert
2. Grip
3. Flat washer
4. Screw
5. Cap

HANDLEBAR SWITCH COVER (LH OR RH)

Handlebar Switch Cover Removal (LH or RH)

Models without AES Steering

1. Insert the end of a small screwdriver in one of cover slots.

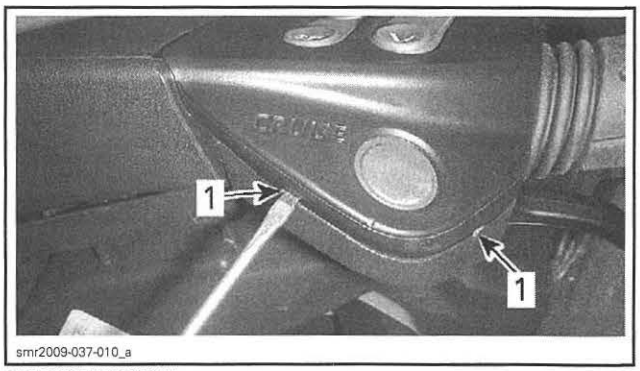

RH SIDE SHOWN
1. Cover slots

2. Twist screwdriver to open cover.
3. Remove the switch cover.

Models with AES Steering

1. Remove the 2 screws at front of the upper handlebar housing.

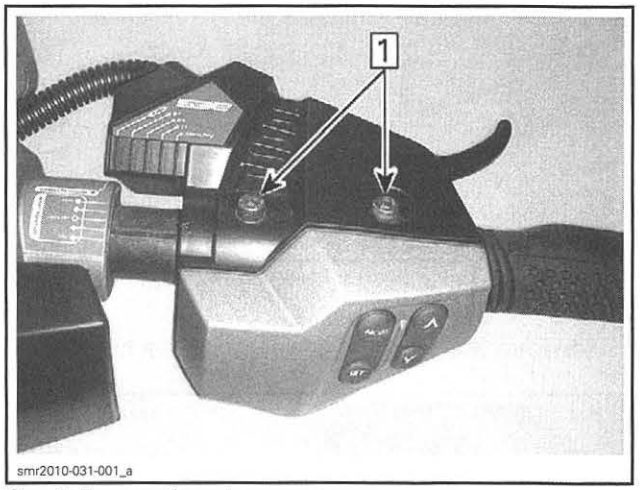

Step 1: Remove these two screws

2. Remove the screw at rear of the handlebar.

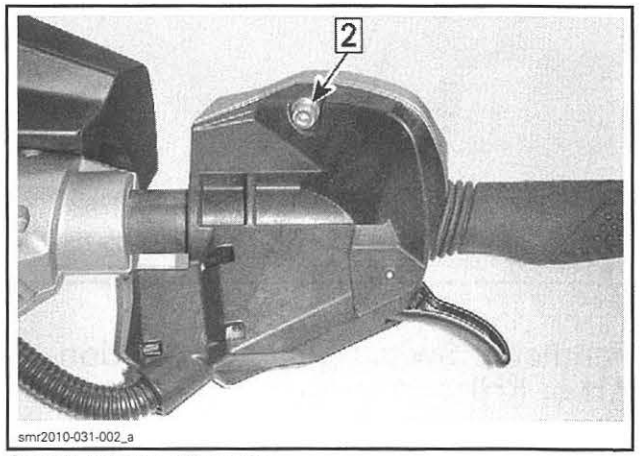

Step 2: Remove this screw

NOTICE Do not try to pull the cover off the housing at this time.

3. Hold the housing cover to prevent it from falling off the handlebar when unlocking the upper housing in the following step.
4. Using a small screwdriver, unlock the tab retaining the upper housing and pull the upper housing off.

NOTICE As you remove the upper housing, hold the housing cover to prevent it from falling off the handlebar.

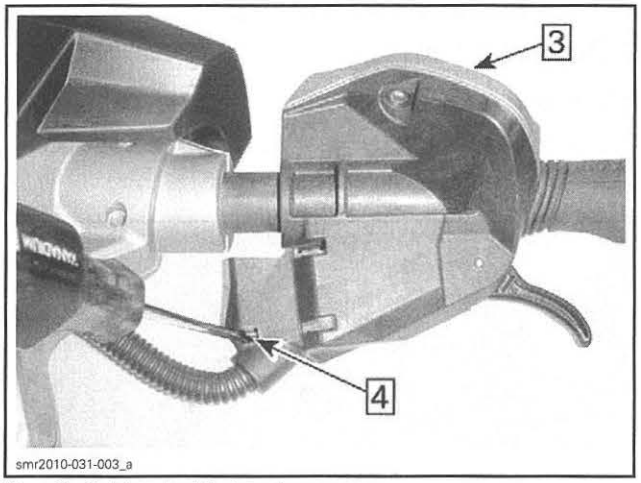

Step 3: Hold on to this housing cover
Step 4: Unlock this tab

5. Remove the housing cover from the handlebar.

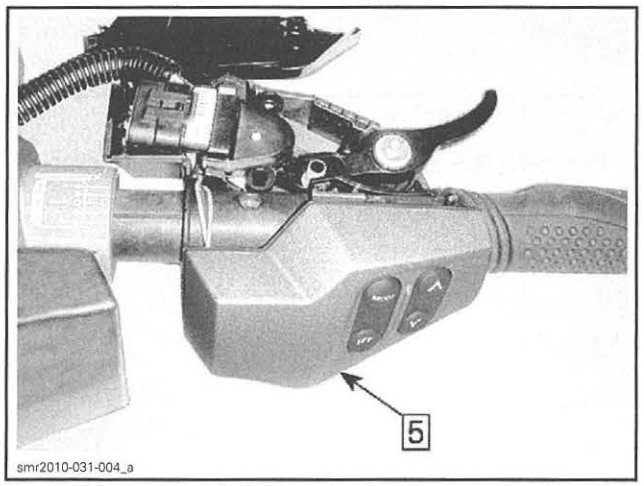

Step 5: Remove housing cover

Handlebar Switch Cover Installation (LH or RH)

Models without AES Steering

1. Install the round rubber button in the cover.
2. Insert the front tab and tilt the cover over the switches (applicable models).

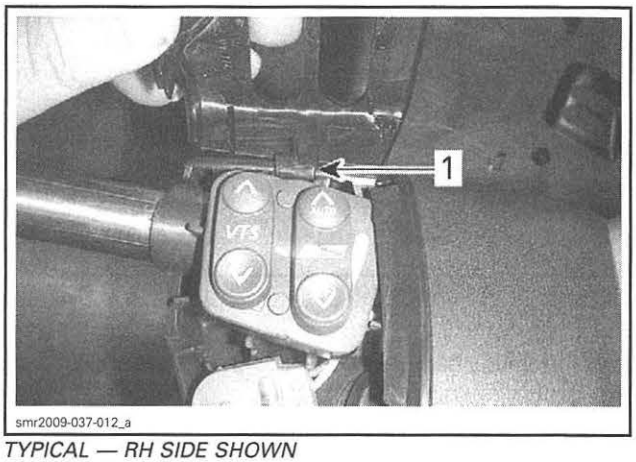

TYPICAL — RH SIDE SHOWN
1. Front tab

3. Press on the cover to lock it.

Models without AES Steering

Installation is the reverse of the removal procedure however, pay attention to the following.

1. Route wires to avoid pinching them.
2. Position the housing cover onto the handlebar housing.
3. Ensure positioning of corrugated conduit

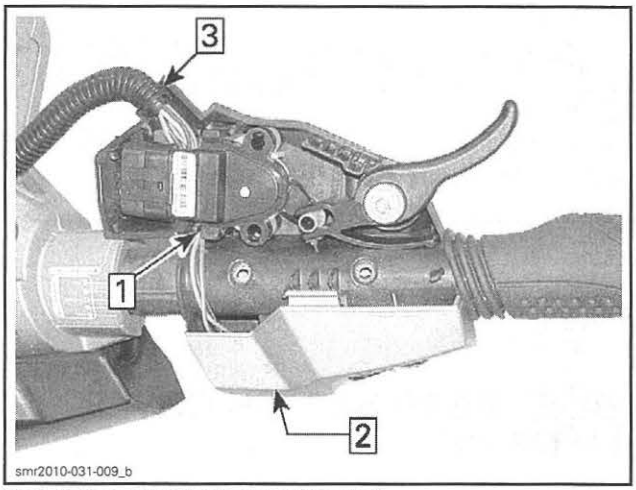

Step 1: Ensure wiring is properly routed
Step 2: Install housing cover
Step 3: Ensure proper corrugated conduit positioning

4. Position the upper housing on the handlebar housing.
5. Ensure proper engagement of the upper housing and cover tabs.

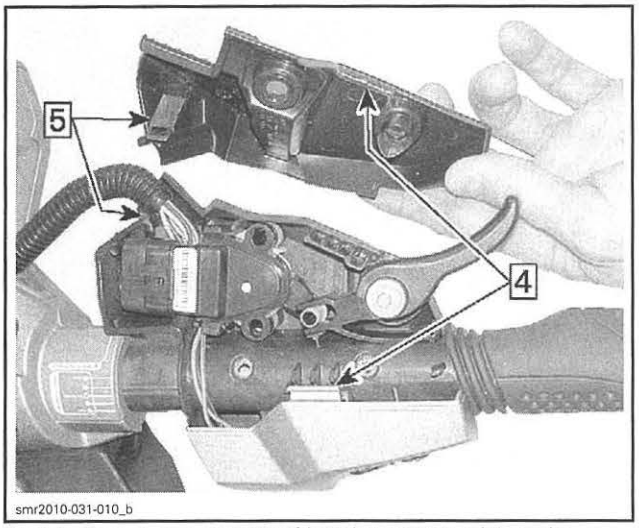

Step 4: Ensure engagement of housing cover retaining tabs
Step 5: Ensure engagement of upper housing locking tabs

6. Install the three retaining screws for the upper housing and torque them to 2 N•m (18 lbf•**in**).
7. Ensure proper operation of throttle lever.

EXTENSION BLOCKS (AES STEERING)

Extension Block Removal

1. Remove all socket screws (8x) that retain the front and the rear extension blocks.
2. Separate both extension blocks.
3. Remove the engine cut-off switch (D.E.S.S. post) retaining nut. Refer to *IGNITION SYSTEM.*

Extension Block Installation

Tighten screws to specification as per illustrated sequence.

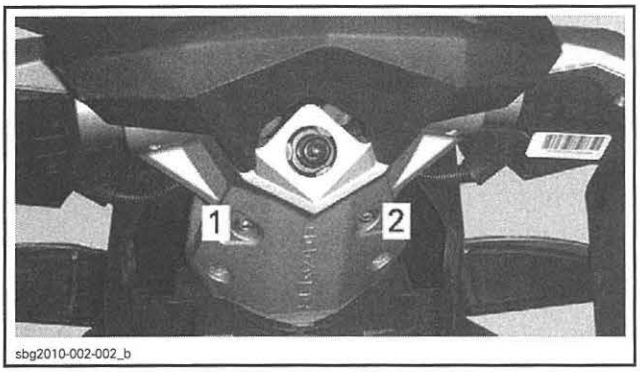

REAR STEERING EXTENSION BLOCK
Torque to 33 N•m (24 lbf•ft)

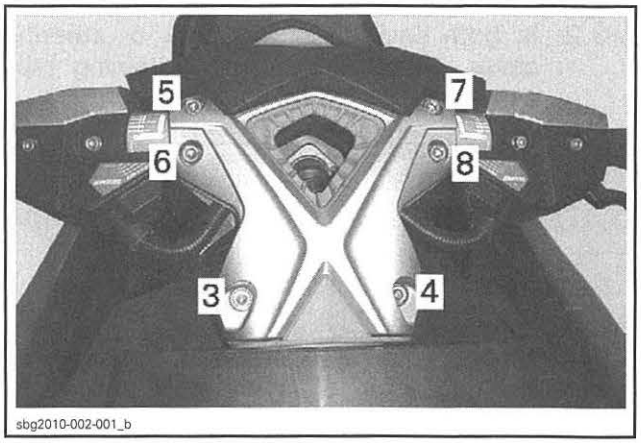

FRONT STEERING EXTENSION BLOCK
3, 4: *LOCTITE 243 (BLUE) (P/N 293 800 060) (or install new self-locking screws). Torque to 33 N•m (24 lbf•ft)*
5 to 8: *Torque to 22 N•m (16 lbf•ft)*

Install engine cut-off switch (D.E.S.S. post) retaining nut. Refer to *IGNITION SYSTEM.*

STEERING COVER

Steering Cover Removal

Models without AES Steering

1. Remove the engine cut-off switch (D.E.S.S. post) retaining nut. Refer to *IGNITION SYSTEM.*
2. Remove both handlebar switch covers. See procedure in this subsection.
3. Unlock steering cover from steering.
   3.1 Insert a small tool, such as an Allen key, into a steering cover hole. Press the tool against the retaining tab to unlock it. Repeat for the other side.

   NOTICE **The tool must be inserted perfectly straight to avoid breaking the tab holder.**

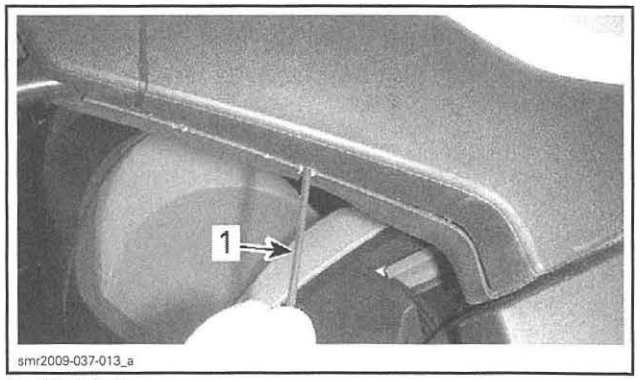

1. Allen key

3.2 In both cavities at the back of steering cover, release both inner retaining tabs using a long screwdriver.

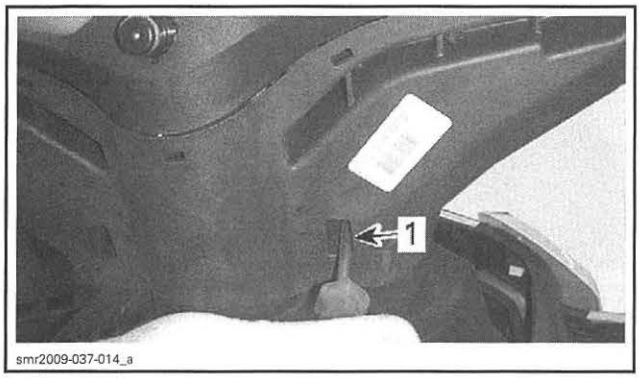

1. Rear cavity

3.3 Release the five retaining tabs at the rear of steering cover.

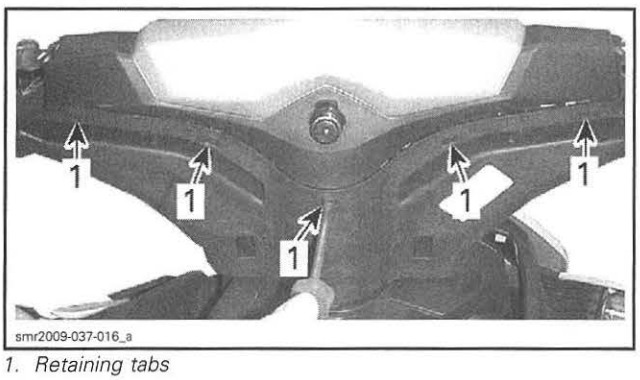

1. Retaining tabs

3.4 Remove the foam inside the steering cover.

3.5 Remove the engine cut-off switch from the steering cover.

RXT-X/RXP-X Series

1. Separate the extension blocks. See procedure in this subsection.
2. Remove screws securing the steering cover (underneath steering cover) to the front extension block.

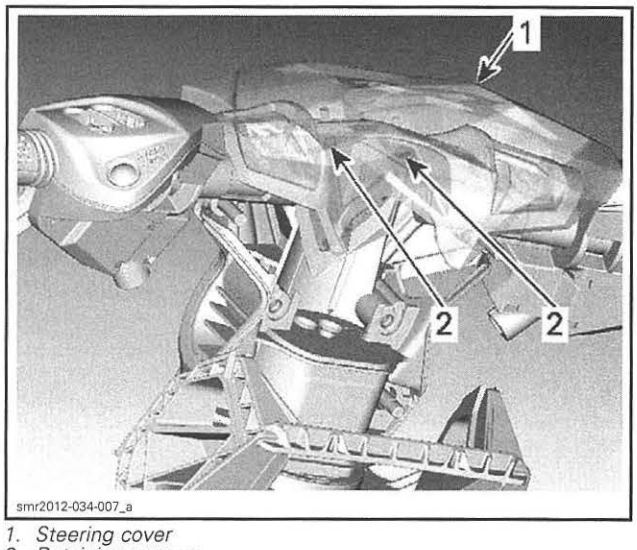

1. Steering cover
2. Retaining screws

Steering Cover Installation

All Models Except RXT-X/RXP-X Series

1. Install the engine cut-off switch.

1.1 Index the alignment pin of the engine cut-off switch with the notch of steering cover.

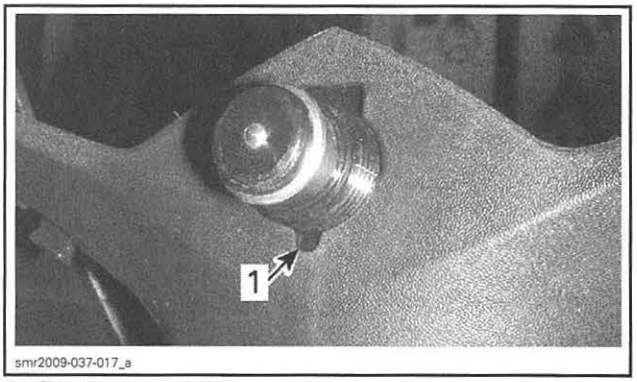

1. Steering cover notch

1.2 Press the engine cut-off switch until retaining tab is positioned correctly.

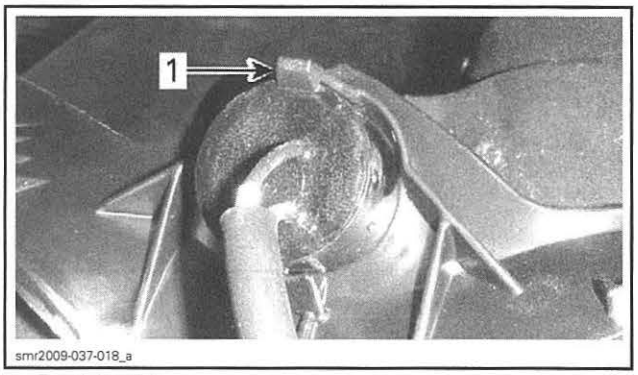

1. Retaining tab

2. Install the engine cut-off switch nut and tighten it to 2 N•m (18 lbf•**in**).
3. Install the foam.
4. Place the engine cut-off switch harness in foam slot.
5. Install the steering cover.
   5.1 Check if all harnesses are route properly. All harness must be inserted in its slot.

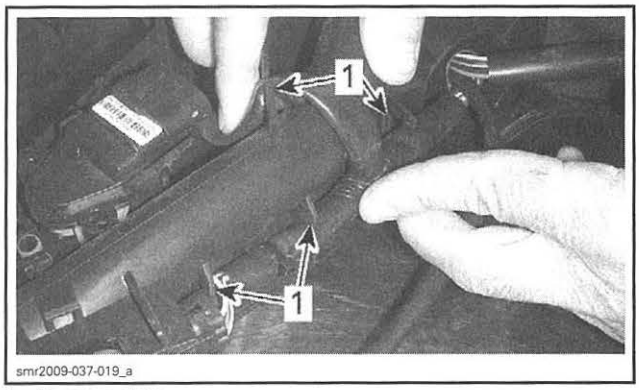

1. Harness slots

   5.2 Clip the top of the cover.
   5.3 Stretch the bottom of the steering cover until the cover edge passes over the inner ribs.

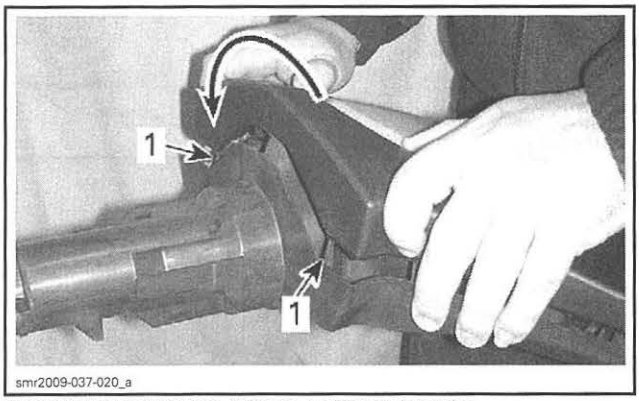

STEERING REMOVED FOR CLARITY PURPOSE
1. Inner ribs

   5.4 Push both side of the cover to lock it with the steering column.
   5.5 Install switch covers.

RXT-X/RXP-X Series

The installation is the reverse of the removal procedure.

THROTTLE AND iBR LEVERS

NOTE: The following procedure demonstrates the replacement of the throttle lever but the same procedure will be used for the iBR lever.

Lever Replacement

1. Remove *HANDLEBAR SWITCH COVER*, see procedure in this subsection.
2. Remove the screw and washer securing throttle lever.
3. Remove throttle lever and its bushings.

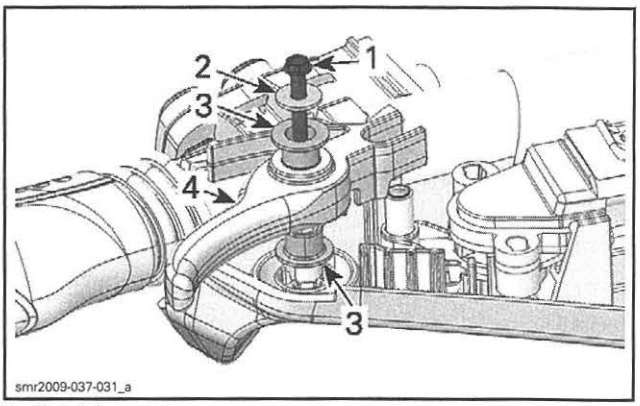

1. Retaining screw
2. Washer
3. Bushings
4. Throttle lever

4. Clean throttle lever area from dust or any deposits.
5. Apply XPS SYNTHETIC GREASE (P/N 293 550 010) on bushings and on the outer surface of the return tab.

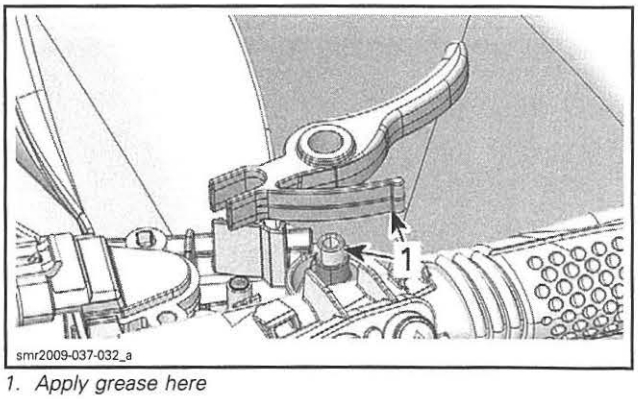

1. Apply grease here

6. Install the lever.
   6.1 Install both bushings in lever hole.
   6.2 Insert sensor lever end into throttle lever fork.
   6.3 Position the return tab against the handlebar.
   6.4 Secure the lever with washer and screw.
   6.5 Tighten the lever screw to 0.7 N•m (6 lbf•**in**).
7. Reinstall all removed parts using appropriate procedures.

STEERING CABLE

Steering Cable Replacement

GTS/GTI Series, GTR, WAKE and RXP-X Series

Remove seat.

Open the front storage compartment cover.

Remove access cover.

Remove the gauge trim. Refer to *BODY* subsection.

RXT/GTX without Suspension

Open the seat and the front storage compartment cover.

Remove the storage basket.

Remove the gauge support. Refer to *GAUGE* subsection.

RXT/GTX with Suspension

Remove the moving deck. Refer to *BODY* subsection.

Remove the adjusting nut from steering cable end.

All Models

1. Detach steering cable from steering column.
   1.1 Remove the bolt securing the ball joint to the steering column arm.

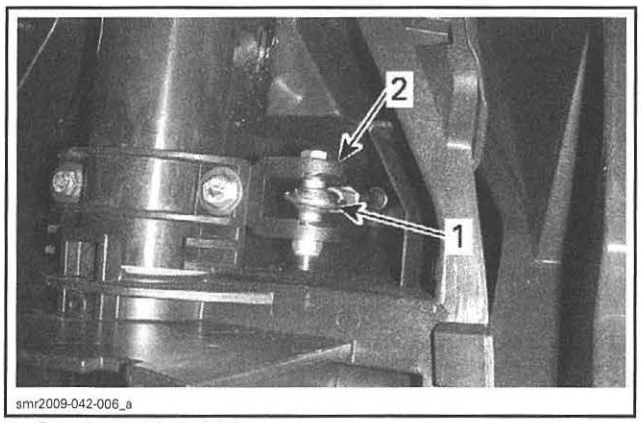

1. Steering cable ball joint
2. Steering column arm

   1.2 Remove the steering cable clamp bolts.
   1.3 Unhook steering cable clamp.

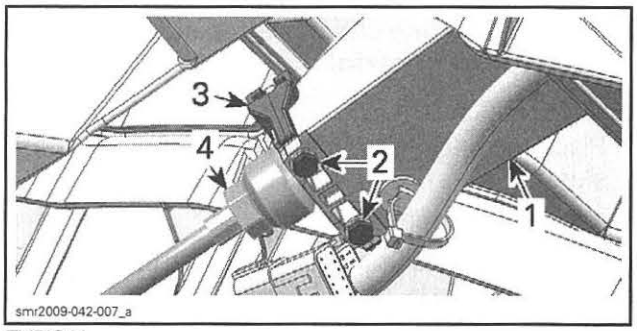

TYPICAL
1. Steering column
2. Steering column clamp bolts
3. Steering column clamp
4. Steering cable adjusting nut

   1.4 Place steering in its lower position (models with tilt steering).
   1.5 Free steering cable from the clamp.
1. At rear of the watercraft, disconnect ball joint from jet pump nozzle arm.

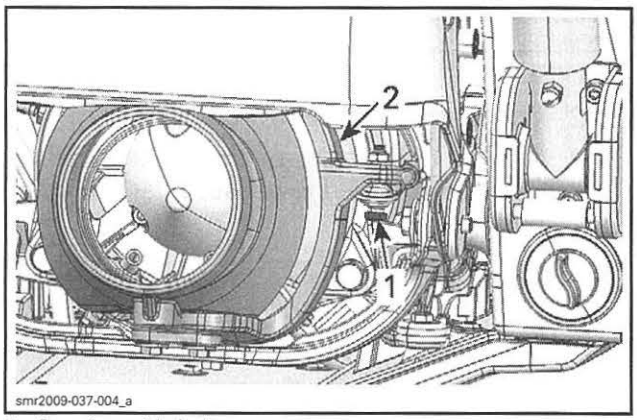

1. Steering cable bolt
2. Nozzle arm

2. Remove ball joint and jam nut from cable.

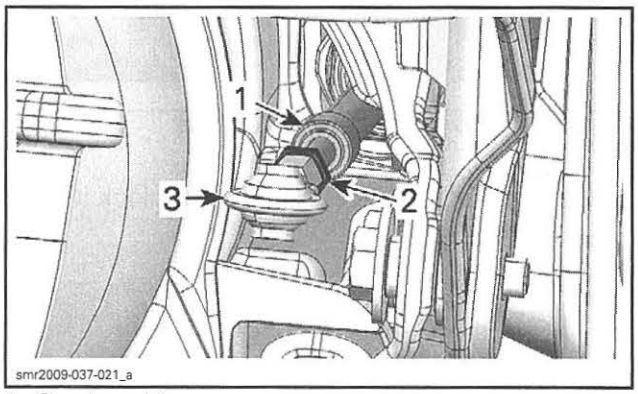

1. Steering cable
2. Jam nut
3. Ball joint

3. Using the STEERING CABLE TOOL (P/N 295 000 145), loosen steering cable nut.

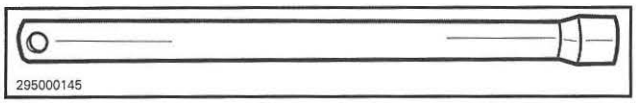

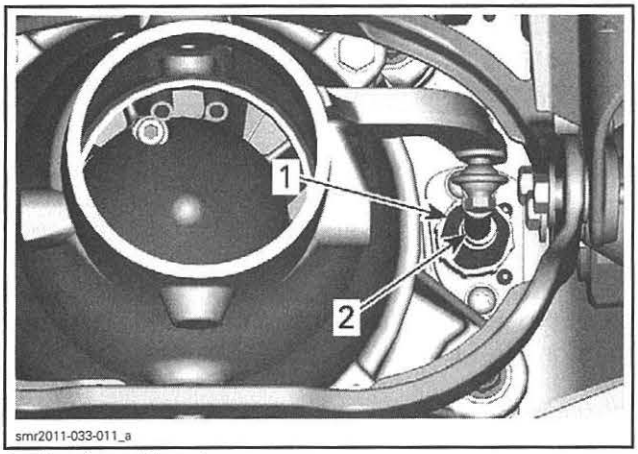

1. Steering cable nut
2. Steering cable

4. Remove steering cable nut, half rings and O-ring.

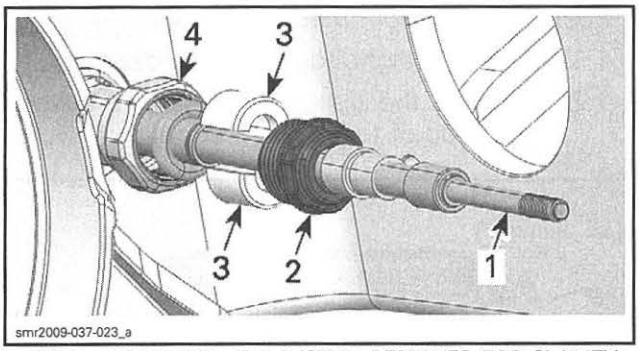

TYPICAL - PUMP AND iBR SYSTEM REMOVED FOR CLARITY PURPOSE ONLY
1. Steering cable
2. Steering cable nut
3. Half rings
4. O-ring

5. Remove the adjusting nut from the new steering cable.
6. From inside the hull, pull the aft end of the cable through the hull fitting.
7. Using a piece of hose, attach one end of the new cable to the opposite end of the old cable together.
8. Route the new cable in the hull by slowly pulling the old one, then separate cable ends.
9. From inside of the hull, pass the aft end of the cable through the hull fitting.
10. Secure the steering cable to the hull fitting.
    10.1 Install O-ring and half rings.
    10.2 Apply LOCTITE 567 (PIPE SEALANT) (P/N 293 800 013) on nut threads.
    10.3 Secure steering cable with the steering cable nut.
    10.4 Tighten nut to 6 N•m (53 lbf•**in**).
11. Install the ball joint on the end of the steering cable.
    11.1 The threaded portion of steering cable inserted into ball joint should be within 9 mm ± 1 mm (.354 in ± .039 in).

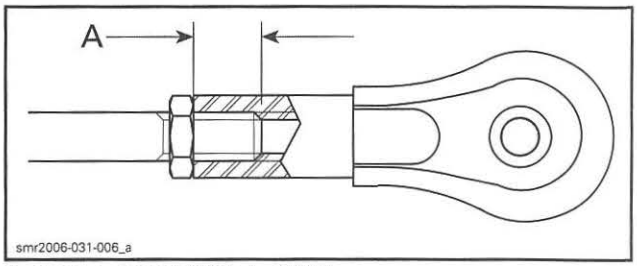

A. 9 mm ± 1 mm (.354 in ± .039 in)

    11.2 Tighten jam nut to 2.5 N•m (22 lbf•**in**).
    11.3 Position the steering cable ball joint to the nozzle as per following illustration.

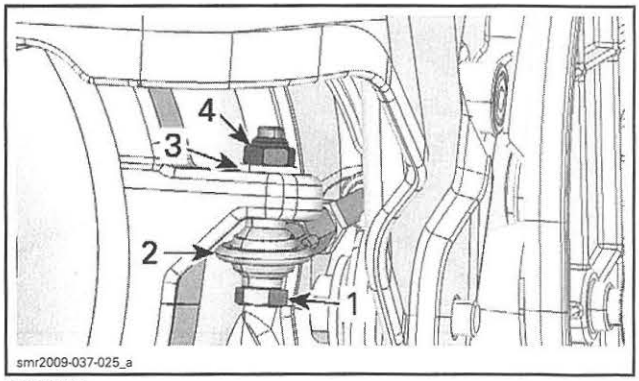

TYPICAL
1. Ball joint bolt
2. Ball joint under nozzle arm
3. Washer
4. Nut

    11.4 Tighten ball joint nut to 7 N•m (62 lbf•**in**).

RXT/GTX with Suspension

1. Check if the cable bellow is properly positioned all around steering cable.

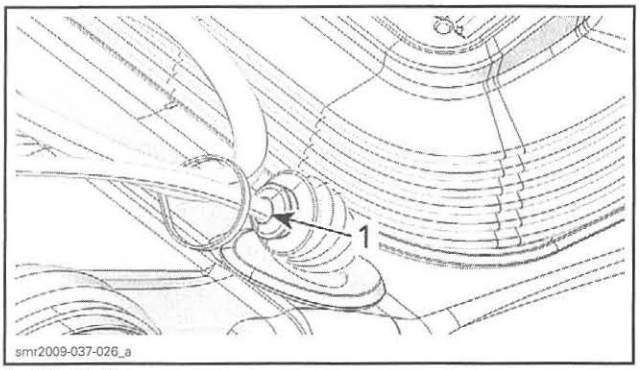

1. Check fit

2. Reinstall the moving deck. Refer to *BODY* subsection for complete procedure.

All Models

1. Carry out *STEERING ALIGNMENT*. See procedure in this subsection.
2. Insert the steering cable through the bottom end of the steering column.
3. Install steering cable clamp and its bolts. Do not tighten bolts yet.

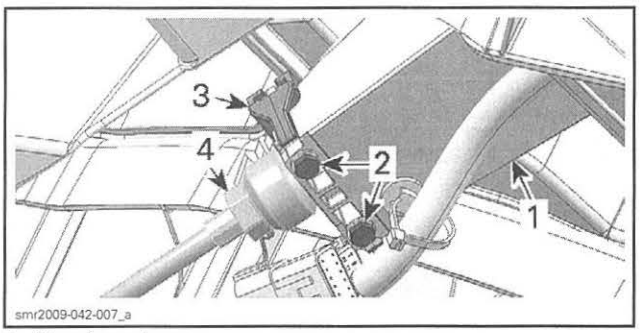

1. Steering column
2. Steering column clamp bolts
3. Steering column clamp
4. Steering cable adjusting nut

4. Attach steering cable to steering column arm.

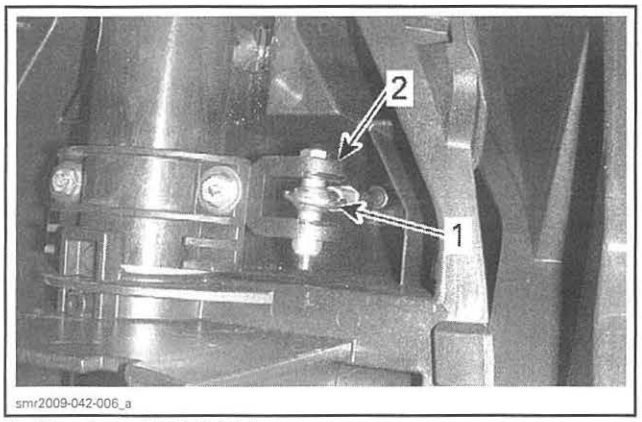

1. Steering cable ball joint
2. Steering column arm

5. Tighten retaining bolt to 5 N•m (44 lbf•**in**).

6. Install other removed parts.

Steering Cable Adjustment

Steering cable adjustment is required only if:
- A steering cable end ball joint has been replaced or loosened/tightened.
- Steering cable adjustment nut has been loosened/tightened.
- Steering cable has been replaced.
- Steering column or support has been replaced.

Models with iBR

Raise the iBR gate by activating the iBR override function. Refer to *iBR AND VTS* subsection.

All Models

Refer to *STEERING CABLE* in this subsection and:
- Detach steering cable end from steering column.
- Unhook steering cable from retaining clamp of steering column support.

1. Position jet pump nozzle as follows:
   1.1 Place a straight edge on the nozzle end.
   1.2 Measure the distance from the transom each side of the straight edge.

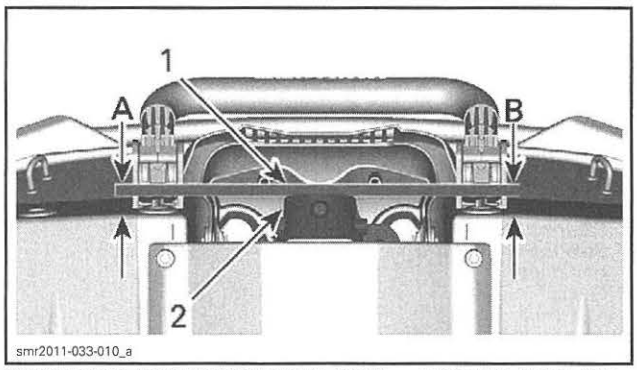

VIEW FROM UNDERNEATH THE HULL — MODELS WITH iBR SHOWN
1. Straight edge
2. Nozzle
A. LH side measure
B. RH side measure

   1.3 Turn nozzle so that measures A and B are equal.

2. Adjust steering cable as follows:
   2.1 Turn adjustment nut to reach specification.

STEERING ADJUSTMENT SPECIFICATION
187.7 mm (7.39 in)
NOTE: This specification gives the proper nozzle adjustment to offset the jet pump thrust.

NOTE: Be careful not to move inner rod as it would alter nozzle position.

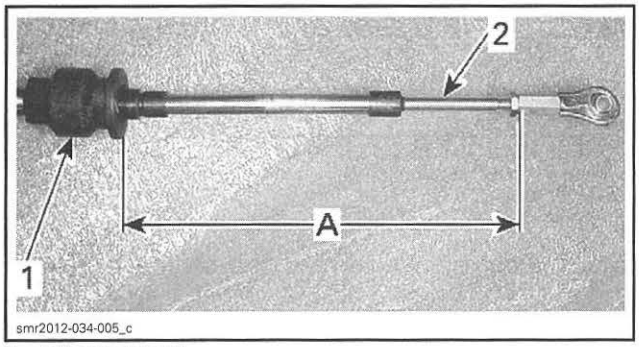

1. *Adjustment nut*
2. *Do NOT move inner rod*

A. 187.7 mm (7.39 in)

2.2 Recheck nozzle position. If it moved, reposition it and readjust cable nut.

2.3 Reinstall steering cable. Pay attention not to turn the adjustment nut as it would alter adjustment.

NOTE: Tape can be used over adjustment nut to prevent altering adjustment.

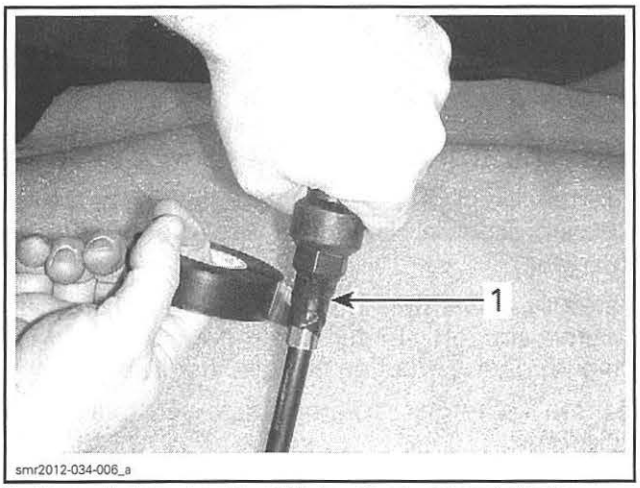

1. *Tape adjustment nut to cable housing to prevent altering adjustment*

2.4 Tighten steering cable clamp bolts to specification.

TIGHTENING TORQUE
6 N•m (53 lbf•**in**)

NOTE: When handlebar is in straight position and steering cable is installed, steering nozzle may not be parallel to transom. This is to offset jet pump thrust.

3. Test ride watercraft.

3.1 If watercraft pull on one side, carry out *STEERING ALIGNMENT* in this subsection.

STEERING COLUMN

Steering Column Removal

GTS/GTI Series, GTR, WAKE and RXP-X Series

Open the front storage cover.

Remove the access cover.

Remove gauge trim, refer to *BODY* subsection.

GTX/RXT Series and WAKE PRO

Open the front storage cover and remove the storage basket.

Remove the gauge support. Refer to *GAUGE* subsection.

1. Disconnect both connectors under the steering column.

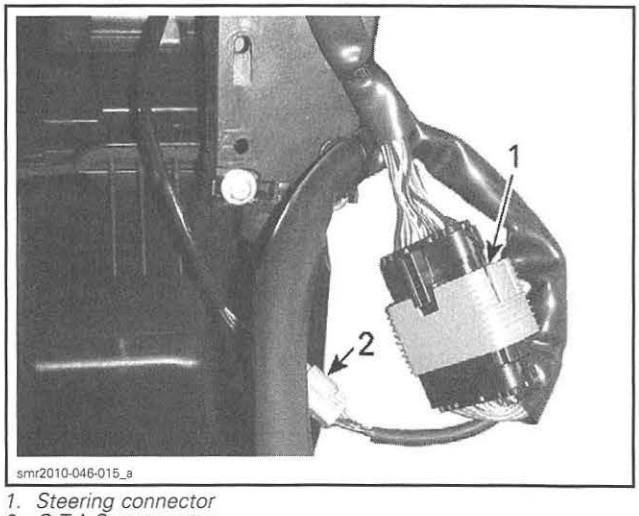

1. *Steering connector*
2. *O.T.A.S. connector*

All Models

2. Remove both screws securing the steering column.

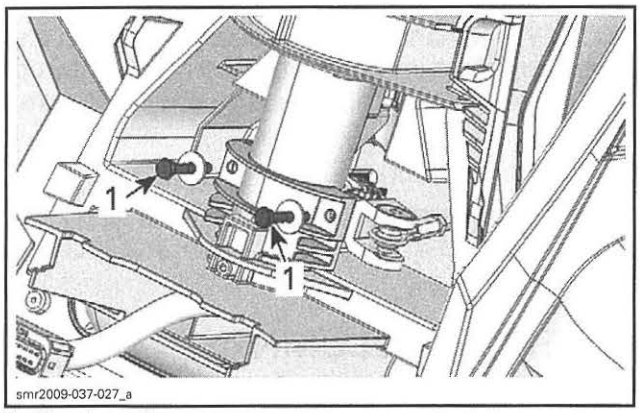

1. Steering column screws

3. Pull steering column out of its support. Ensure to not damage wiring harness connectors and O.T.A.S. magnets.

Steering Column Inspection

Check steering column for:
- Cracks
- Stress marks
- Sings of wear.

Check steering column support bushings.

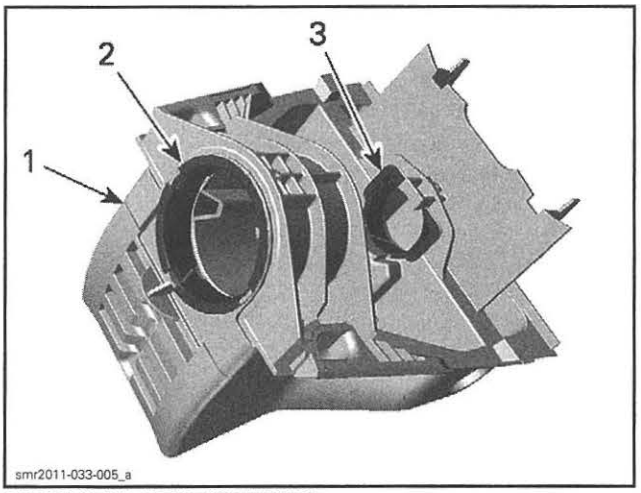

MODELS WITH TILT STEERING
1. Steering column support
2. Upper bushing
3. Lower bushing

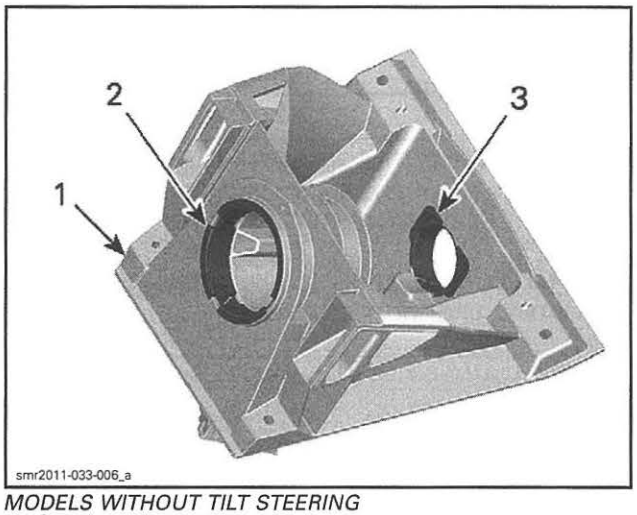

MODELS WITHOUT TILT STEERING
1. Steering column support
2. Upper bushing
3. Lower bushing

Check wear sleeve behind the steering column arm.

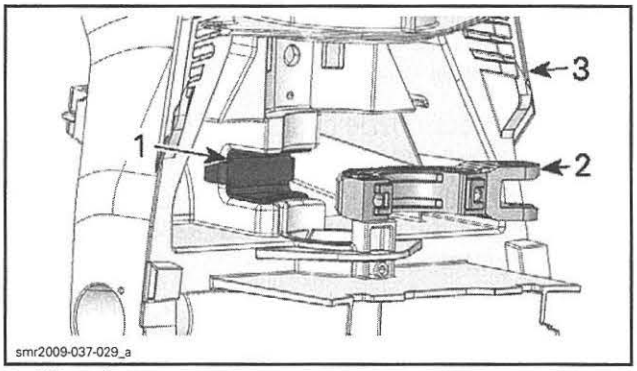

1. Wear sleeve
2. Steering column arm
3. Steering column support

Replace any damaged or worn parts.

Steering Column Installation

The installation is essentially the reverse of the removal procedure. However, pay attention to the following.

Carefully, drive steering column through steering column support. Ensure not to hit the O.T.A.S. magnet during steering column installation.

Tighten steering column screws to 6 N•m (53 lbf•**in**).

Reinstall all removed parts using appropriate procedure.

STEERING COLUMN SUPPORT

Steering Column Support Removal (GTS/GTI Series, GTR, WAKE and RXP-X Series)

1. Remove steering column, see procedure in this subsection.
2. Remove console, refer to *BODY* subsection.
3. Remove steering column support retaining screws.

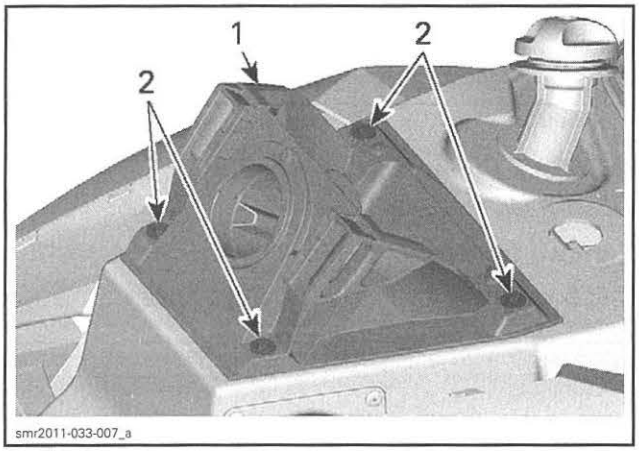

1. Steering column support
2. Retaining screws

Steering Column Support Removal (GTX/RXT Series and WAKE PRO)

1. Refer to *BODY* and remove the following parts:
   - Storage compartment cover
   - Front grille **(models with suspension)**
   - Body covers.
2. Remove storage basket.
3. Disconnect both connectors under the steering column.

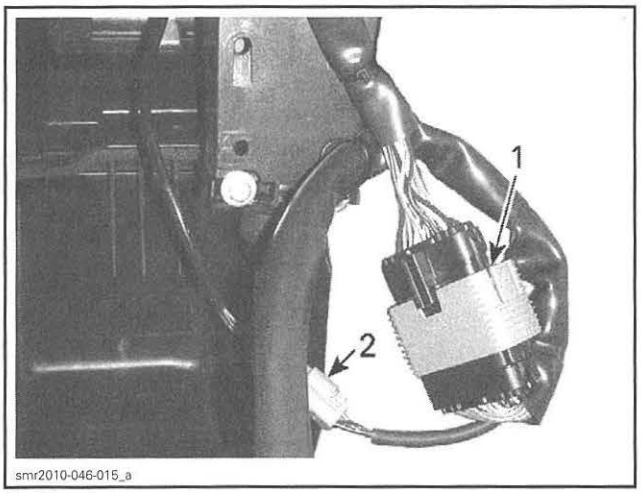

1. Steering connector
2. O.T.A.S. connector

4. Remove the gauge support. Refer to *GAUGE* subsection.
5. On both sides, remove both pivot bushings (steering column support and steering adjustment handle).

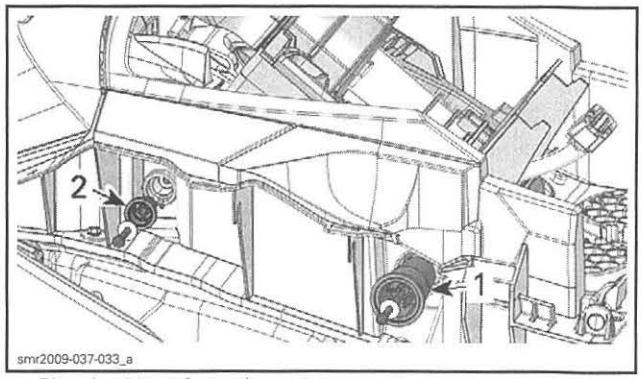

1. Pivot bushing of steering column support
2. Pivot bushing of steering adjustment handle

NOTE: If pivot bushings retaining steering column are hard to remove, remove the retaining screw from the center hole and tighten it into the offset hole. Tighten screw until the pivot bushing comes out of steering column support.

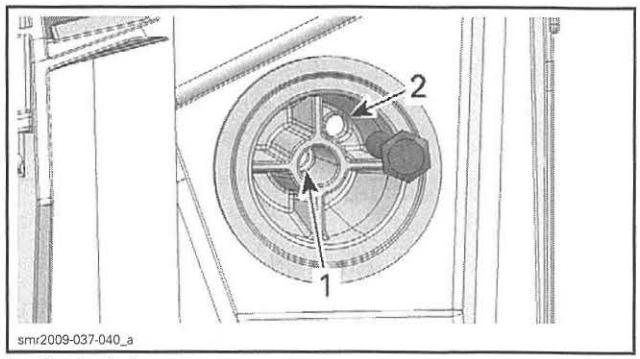

1. Center hole
2. Offset hole

6. Remove steering column support and steering adjustment handle from vehicle.
7. Remove *STEERING COLUMN* from its support. See the procedure in this subsection.

Steering Column Support Installation

Installation is the reverse of the removal procedure.

STEERING TILT RELEASE HANDLE

Steering Tilt Release Handle Replacement

Use the same procedure as for *STEERING COLUMN SUPPORT*.

O.T.A.S. SWITCH

O.T.A.S. Switch Test with B.U.D.S.

Connect watercraft to B.U.D.S. Refer to *COMMUNICATION TOOLS AND B.U.D.S.* subsection.

Select the **Monitoring** and **iBR** tabs.

Briefly press the START/STOP button to wake up the ECM.

Install the tether cord on the engine cut-off switch.

While monitoring the O.T.A.S. indicator in B.U.D.S., completely turn steering in one direction and keep it in this position.

The O.T.A.S. indicator should turn on when handlebar reaches the stopper.

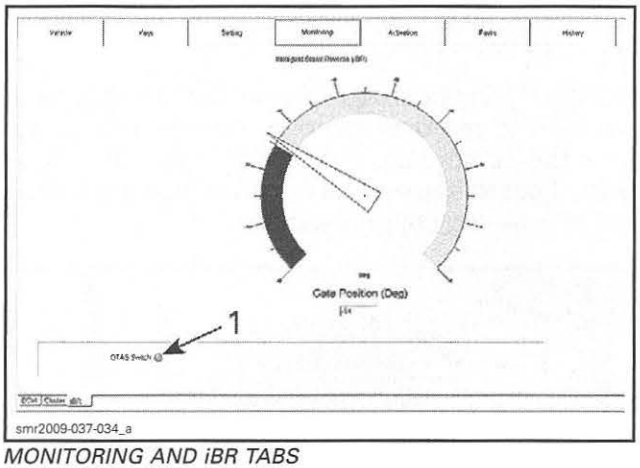

MONITORING AND iBR TABS
1. O.T.A.S. indicator

Repeat test for the other side.

If O.T.A.S. indicator does not turn on, carry out the *O.T.A.S. SWITCH INPUT VOLTAGE TEST.*

O.T.A.S. Switch Input Voltage Test

Access the O.T.A.S. connector as follows:

GTS/GTI Series, GTR, WAKE and RXP-X Series

Open the front storage cover an remove the access panel.

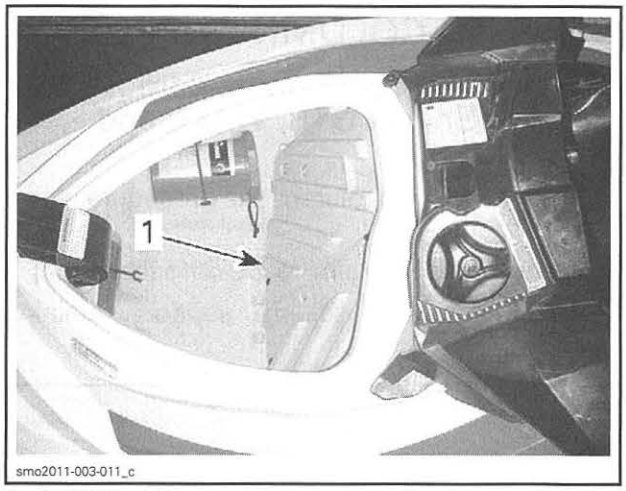

1. Access panel

GTX/RXT Series and WAKE PRO

Open front storage compartment cover.

Remove front storage bin.

Disconnect the top air ventilation hoses.

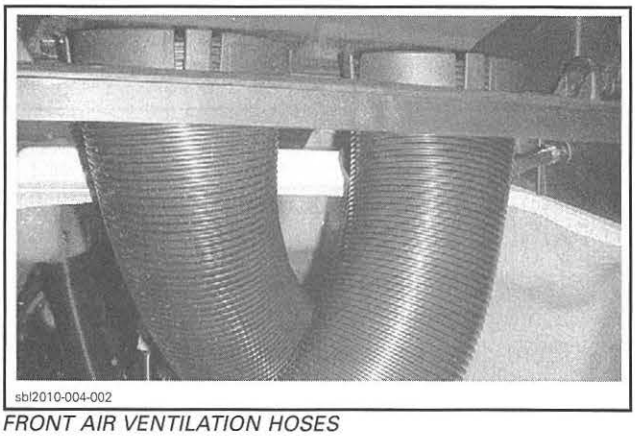

FRONT AIR VENTILATION HOSES

RXT/GTX with Suspension

Open front storage compartment cover.

Remove front storage bin.

For easier access, rise the moving deck using the iS "up" button.

All Models

Disconnect the O.T.A.S. connector (keep the 24-pin steering harness connected.

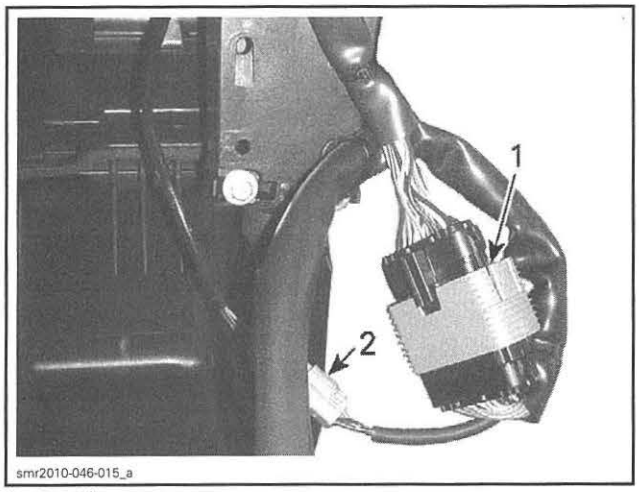

1. Steering connector
2. O.T.A.S. connector

Connect the DIAGNOSTIC HARNESS (P/N 529 036 188) in-line between the disconnected O.T.A.S. connectors.

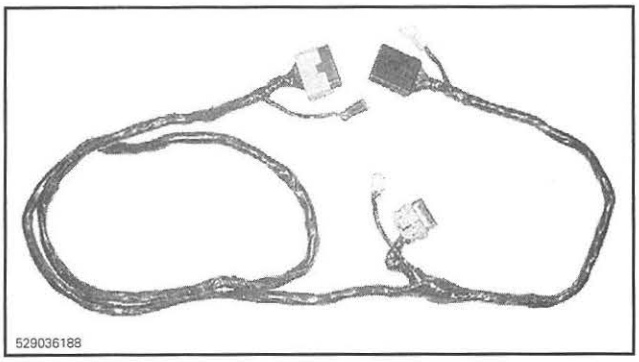

Press the START/STOP button to activate the electrical system.

Using the FLUKE 115 MULTIMETER (P/N 529 035 868), measure voltage as follows.

TEST PROBES		VOLTAGE (VDC)
PIN A (3-pin connector)	Battery negative post	Battery voltage

If voltage is not as specified, check wiring and connectors.

If voltage is as specified, carry out the *O.T.A.S. SWITCH GROUND TEST.*

O.T.A.S. Switch Ground Test

Install the DIAGNOSTIC HARNESS (P/N 529 036 188) as described in the *O.T.A.S. SWITCH INPUT VOLTAGE TEST.*

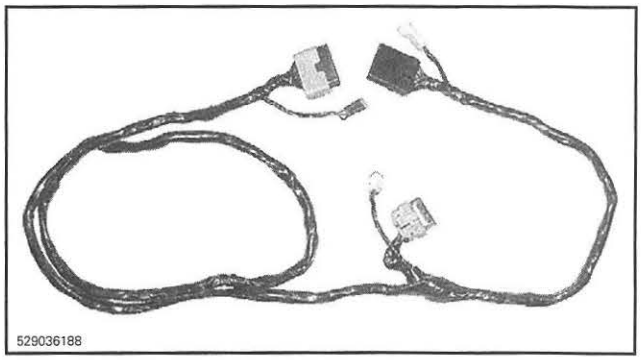

Press the START/STOP button to activate the electrical system.

Using the FLUKE 115 MULTIMETER (P/N 529 035 868), check ground circuit as follows.

TEST PROBES		VOLTAGE (VDC)
PIN A (3-pin connector)	PIN B (3-pin connector)	Battery voltage

If voltage is not as specified, check wiring and connectors.

If voltage is as specified, carry out the *O.T.A.S. SWITCH SIGNAL TEST.*

O.T.A.S. Switch Signal Test

Install the DIAGNOSTIC HARNESS (P/N 529 036 188) as described in the *O.T.A.S. SWITCH INPUT VOLTAGE TEST.*

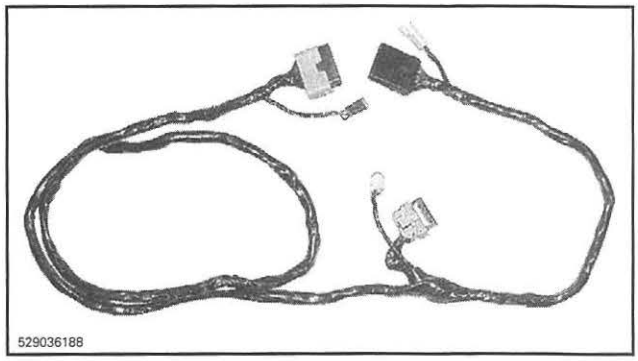

Press the START/STOP button to activate the electrical system.

Using the FLUKE 115 MULTIMETER (P/N 529 035 868), check switch signal as follows.

TEST PROBES		HANDLEBAR POSITION	VOLTAGE
PIN C (3-pin connector)	PIN B (3-pin connector)	Straight ahead	0.6 to 0.8 Vdc
		Turned completely to the right	2.0 to 2.5 Vdc
		Turned completely to the left	

If voltage is not as specified, replace the switch.

NOTE: To avoid useless switch replacement, make sure magnets are in good condition. Also, make sure magnets and switch are securely clipped.

O.T.A.S. Switch Replacement

Models Without Tilt Steering

Remove steering column, see procedure in this subsection.

Models with Tilt Steering

Remove *STEERING COLUMN SUPPORT*, see procedure in this subsection.

Remove steering column from its support by removing both retaining screws.

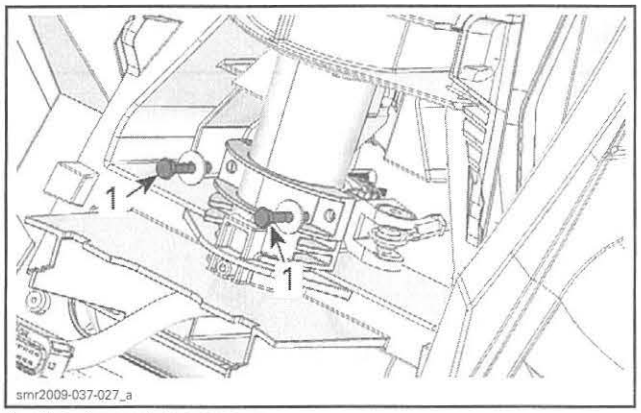

1. Steering column screws

All Models

1. Using a small screwdriver, unhook the switch from steering support.

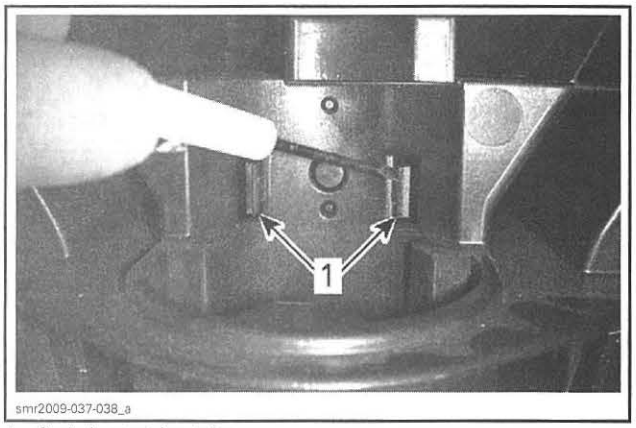

1. Switch retaining tabs

Reverse removal procedure to reinstall the O.T.A.S. switch.

O.T.A.S. MAGNETS

Magnets Replacement

1. Remove *STEERING COLUMN*, see procedure in this subsection.
2. Pull magnets off the steering column.

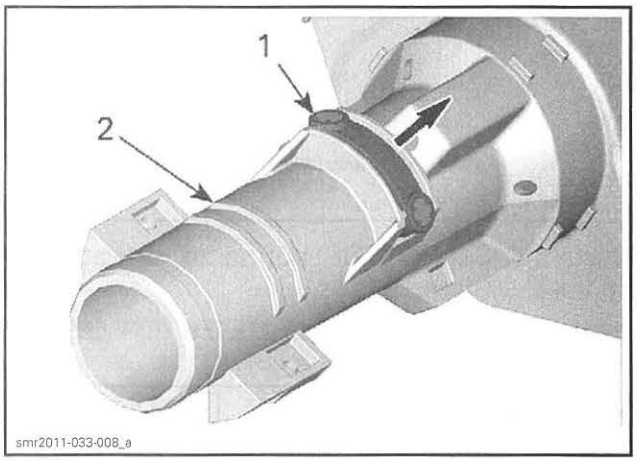

1. Magnets
2. Steering column

Reverse removal procedure to reinstall the magnets.

iBR AND VTS

SERVICE TOOLS

Description	Part Number	Page
DIAGNOSTIC HARNESS	529 036 188	467, 469
FLUKE 115 MULTIMETER	529 035 868	467, 474–475, 487

SERVICE PRODUCTS

Description	Part Number	Page
DIELECTRIC GREASE	293 550 004	478, 488
LOCTITE 243 (BLUE)	293 800 060	478–479

iBR GATE COMPONENTS

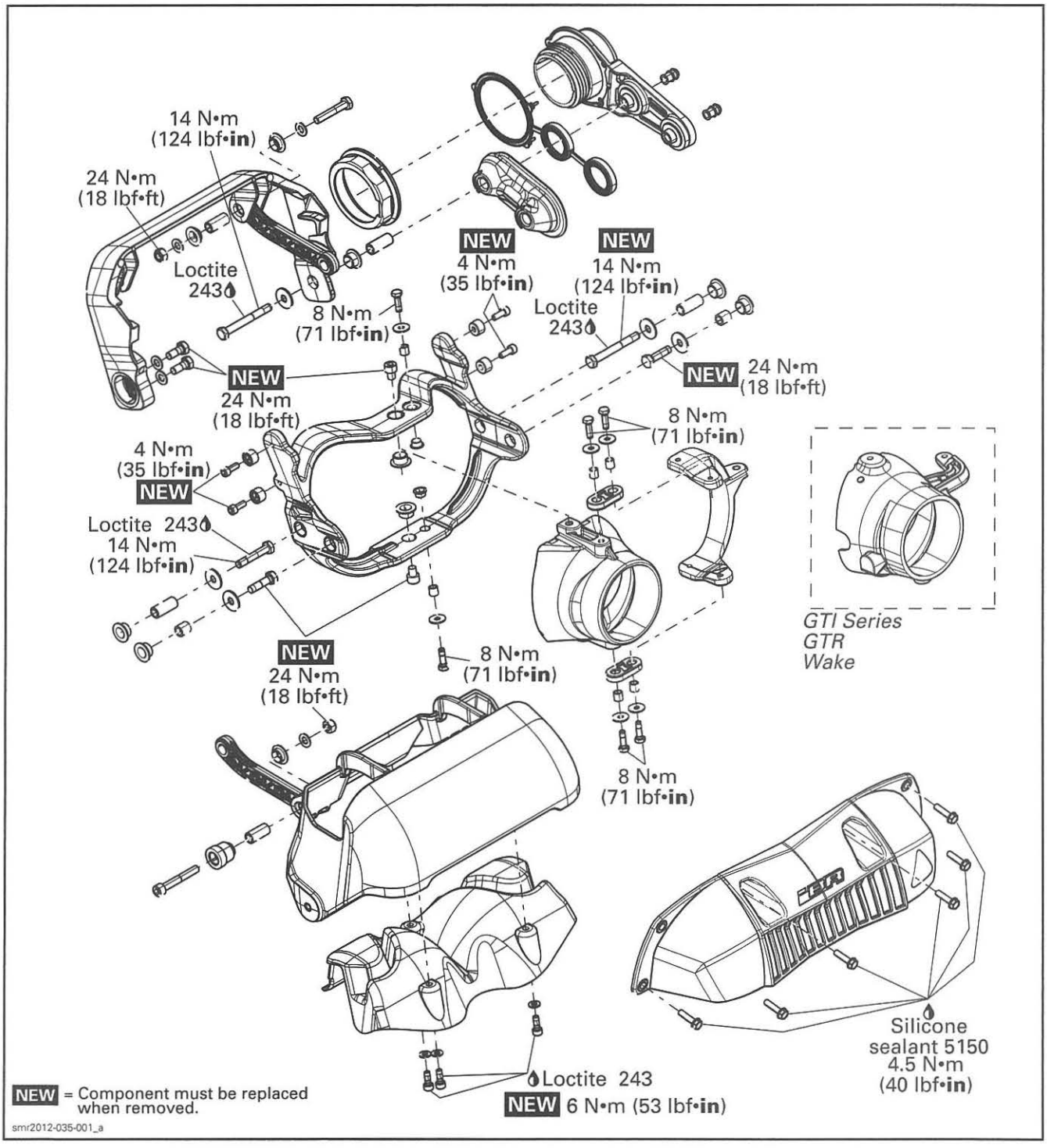

iBR ACTUATOR

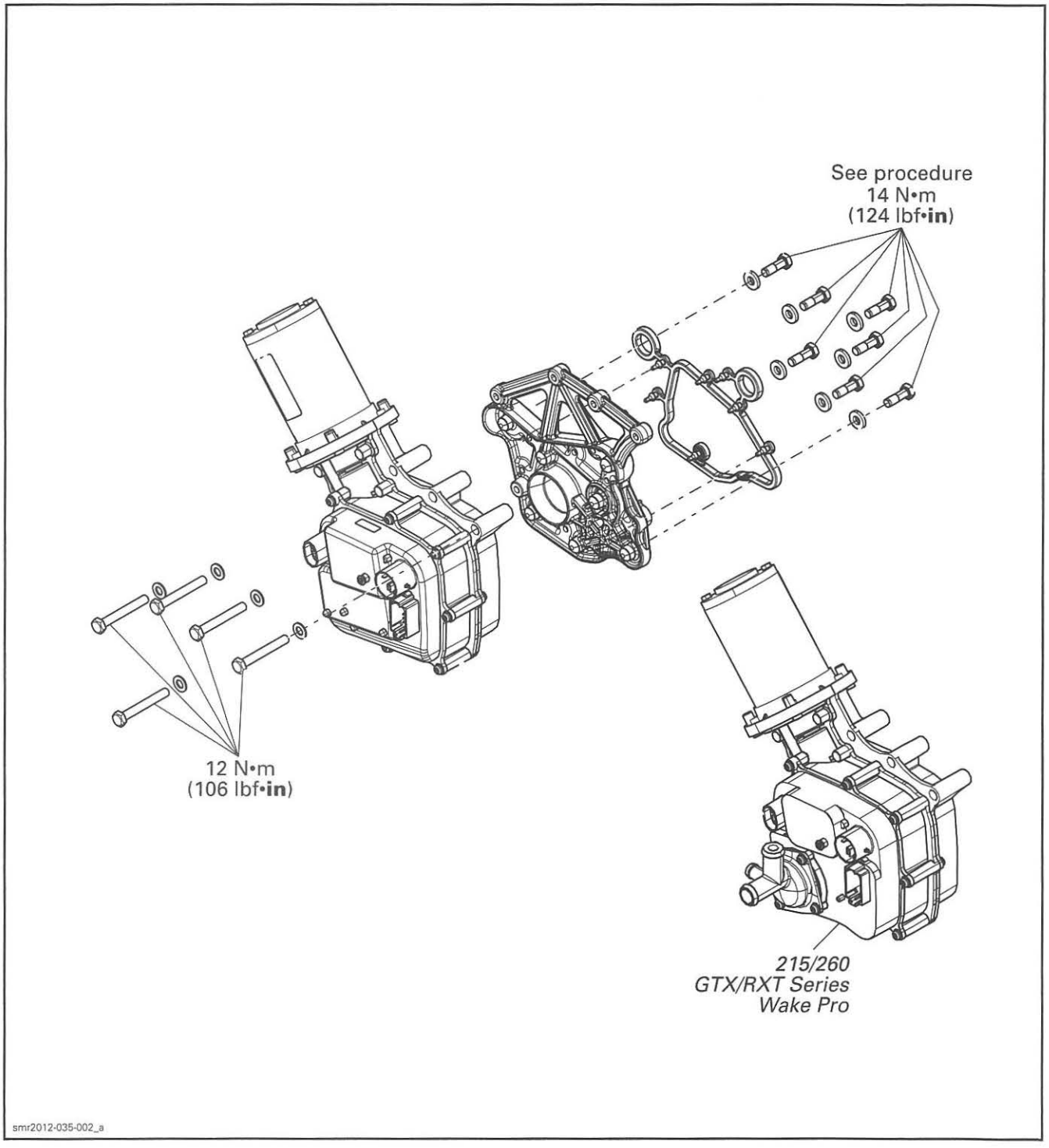

GENERAL

SYSTEM DESCRIPTION (iBR)

The iBR (intelligent Brake and Reverse) is an electronically controlled braking and reverse system.

The iBR module controls the position of the iBR gate to provide forward thrust, reverse thrust, braking thrust, and neutral.

The operator commands the position of the iBR gate using either the throttle lever for forward thrust, or the iBR lever for neutral, reverse, and for the braking function.

The iBR lever is located on the LH side of the handlebar.

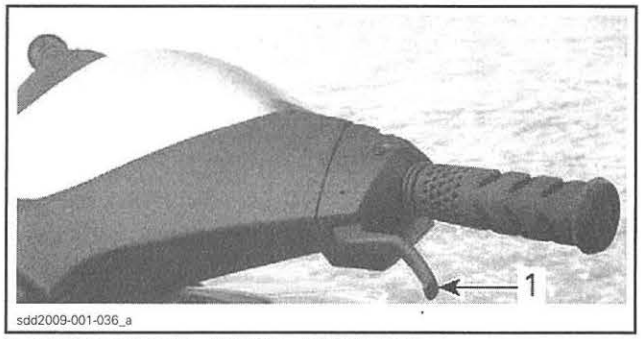

1. iBR lever (intelligent Brake and Reverse)

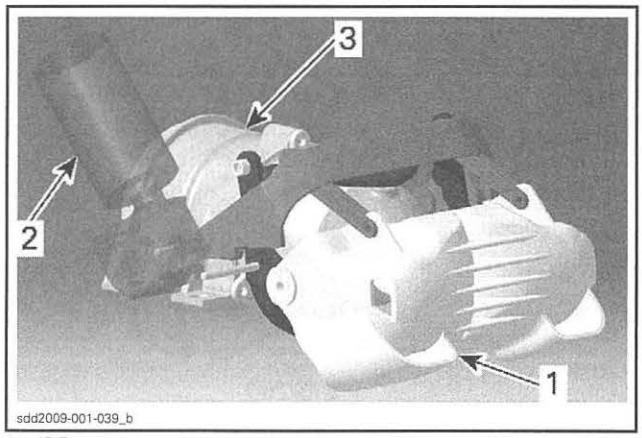

1. iBR gate
2. iBR module and motor
3. Jet pump

When the iBR lever is pulled in, it operates the brake and reverse lever sensor (BRLS). It is a double output hall effect sensor. The redundancy is used for security purposes.

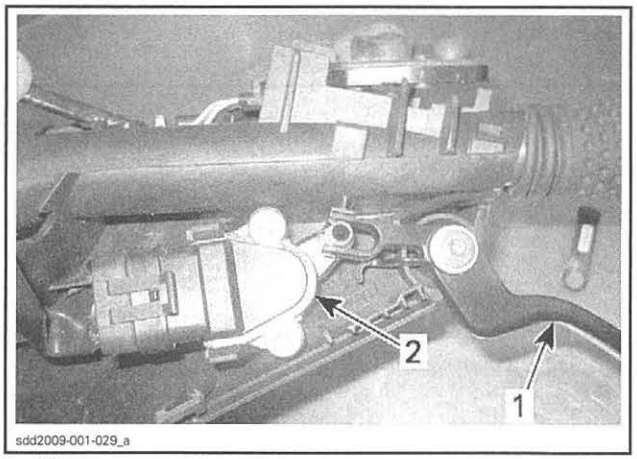

1. iBR lever
2. BRLS sensor

The BRLS sends the signals to the iBR module. The iBR module controls an electric motor that in turn raises or lowers the iBR gate through a mechanical drive unit.

NOTE: The iBR gate will move when commanded by the iBR lever only if the engine is running. For maintenance purposes, the iBR OVERRIDE function available through the gauge can be used to electrically move the gate to the desired position.

The iBR module is programmed with various parameters that it compares to the input signals and information it obtains through the CAN bus from the other electronic modules.

Depending on vehicle speed and how far the iBR lever is pulled in, the iBR module will automatically adjust the iBR gate movement speed and stroke.

NOTE: The iBR lever must be pulled in at least 25% of its travel (approximately) before the iBR gate starts to move. The first 25% of iBR lever travel has no effect on the iBR gate.

Every time the iBR gate moves when commanded by the iBR lever, engine RPM is momentarily reduced to idle speed as the gate moves.

⚠ WARNING

If it is necessary to remove any foreign object catch in the iBR gate, nozzle or linkages, strictly observe the following before proceeding:

- **Remove tether cord from engine cut-off switch.**
- **Wait at least 5 minutes or remove iBR fuses.**
- **Do not press on START/STOP button. If START/STOP button is pressed, wait another 5 minutes.**

Forward Mode

To engage forward:
- Start engine
- Pull in the throttle lever.

The iBR gate will automatically move to the forward position (full up).

NOTE: The full up position of the iBR gate is dependent on the selected VTS trim position.

Reverse Mode

If the watercraft speed is below 8 km/h (5 MPH) when the iBR lever is pulled in, reverse mode is engaged.

When the iBR lever is pulled in to engage reverse, the following occurs:
- Engine RPM is reduced to idle.
- The iBR gate moves to the reverse position.
- Engine RPM ramps up to the engine power commanded by the throttle lever.

When operating in reverse mode, the iBR lever controls the iBR gate position and the engine RPM is controlled by the throttle lever.

The iBR gate position can be modulated anywhere between the neutral and full reverse positions depending on the position of the iBR lever. If the iBR lever position is varied during reverse operation, engine RPM is reduced to idle every time the iBR gate moves. It is therefore recommended to maintain the iBR lever completely pulled in.

Maximum engine RPM in reverse is 5000 RPM.

Braking Mode

If the watercraft speed is 8 km/h (5 MPH) per hour and above when the iBR lever is pulled in, braking mode is engaged.

When the iBR lever is pulled in to engage braking, the following occurs:
- Engine RPM is reduced to idle.
- The iBR gate moves to the maximum down position.
- Engine RPM ramps up to the engine power commanded by the iBR lever.

When operating in braking mode, the iBR gate always moves to the maximum down position. The throttle lever signal is overridden and engine RPM is now dependent on watercraft speed and how far the iBR lever is pulled in.

If watercraft speed is high when braking is applied, engine power will be initially low and then ramp up to the power commanded by the iBR lever position. The engine RPM may be increased, as necessary, to apply a stronger braking effect with the jet pump thrust when the conditions dictate.

As the watercraft slows to less than 8 km/h (5 MPH), the following occurs:
- Braking mode ceases.
- Reverse mode takes over if the iBR lever is not released.
- Throttle control reverts back to the throttle lever.

Neutral Mode

Every time the iBR lever is pulled in and released, the iBR gate will default to the **neutral** position, except if the throttle lever is still pulled in when the iBR lever is released. If the throttle lever is still pulled, the iBR gate will move to the forward position when the iBR lever is released and the watercraft will accelerate forward.

iBR Override Function

To permit easy access to the jet pump, nozzle, iBR gate, and various linkages for inspection, maintenance, cleaning or removal of debris, the iBR system provides for an iBR override function that is accessible through the information center.

When iBR override is activated, it allows the user to electrically move the iBR gate and nozzle through its full range of motion.

NOTICE **An object or tool catch in the iBR gate, nozzle or linkages when using the iBR override function may cause damage to these components. Remove any foreign object that may obstruct the iBR gate travel.**

Activating iBR Override Function

⚠ WARNING

When using the iBR override function, ensure nobody stands near the rear of the watercraft. Movement of the iBR gate may squeeze fingers.

To use the iBR override function, carry out the following step.

1. Press the START/STOP button.
2. Install the tether cord.

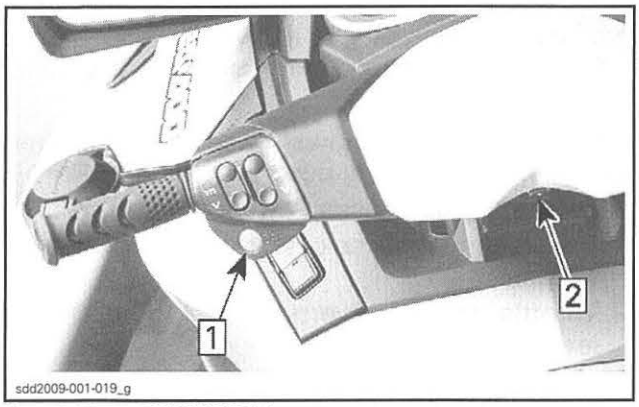

Step 1: Press START/STOP button
Step 2: Install tether cord

NOTE: Do not start the engine. The tether cord must be installed to ensure the information center will not shut off all indications after its self test function. Briefly press the START/STOP button to reactivate the electrical system when required.

3. Press the **Mode** button on the RH handlebar repeatedly until SETTINGS is visible in the digital display of the information center.

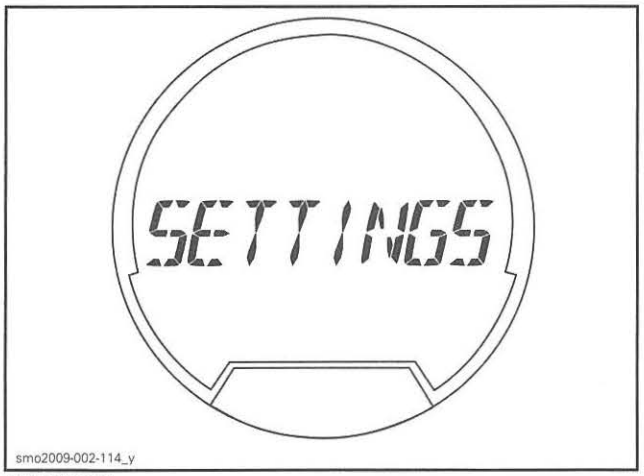

SETTINGS

4. Press the SET button (RH handlebar) to enter the **Settings** function.
5. If iBR OVR is not the following function displayed, press the UP/DOWN arrow button until iBR OVR is displayed.

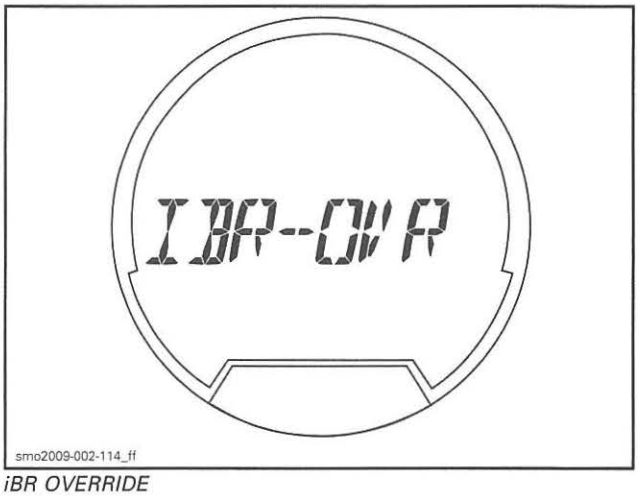

iBR OVERRIDE

6. Press the SET button to enter iBR OVR function and display OVR OFF.

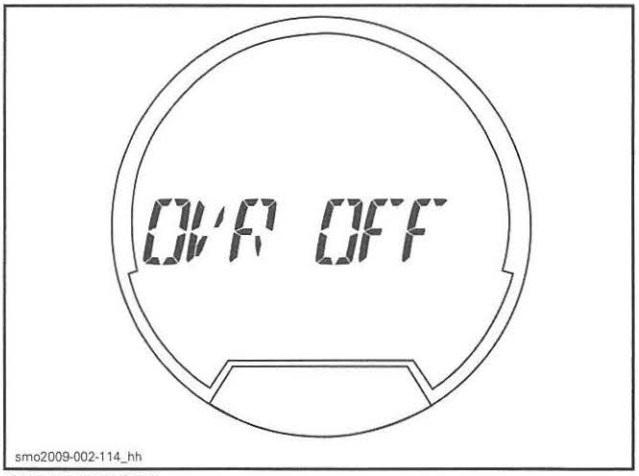

OVERRIDE OFF

7. Press the UP/DOWN arrow button (RH handlebar) to display OVR ON.

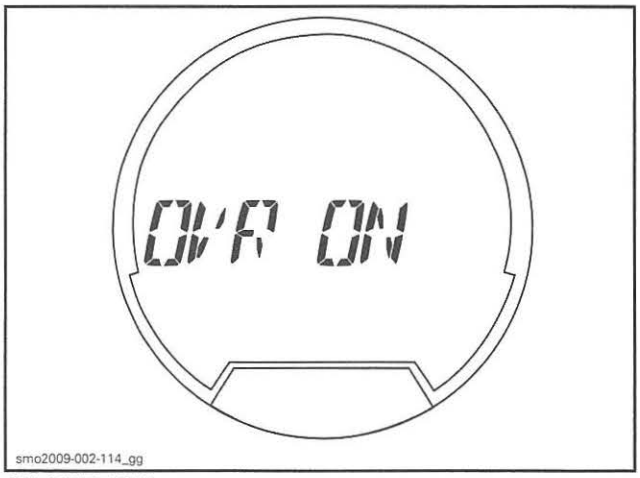

OVERRIDE ON

8. Press the SET button to select the OVR ON function. The gauge will return to its normal display.

Models with a VTS Switch

9. Press the VTS UP or DOWN button (LH handlebar) to move the iBR gate.

Models Without a VTS Switch

10. Press the UP/DOWN arrow button (RH handlebar) to move the iBR gate.

Deactivating iBR Override Function

To deactivate the iBR override function, carry out one of the following:

1. Repeat previous steps and press the SET button when OVR OFF is visible.
2. Remove tether cord and wait for the electrical power to shut off (approximately 3 minutes).
3. Start the engine.

NOTE: When the engine is started, the iBR OVR function is deactivated and the iBR gate will move to the neutral position.

⚠ WARNING

When moving the iBR gate using the iBR override function, ensure nobody stands near the rear of the watercraft. Movement of the gate may squeeze fingers.

SYSTEM DESCRIPTION (VTS)

The VTS system is actually part of the iBR system.

It provides watercraft pitch trim adjustments by adjusting the horizontal position of the jet nozzle.

The VTS can be electrically trimmed to the desired attitude within the VTS range, or to one of 2 preset trim positions.

The VTS switch (or Up/Down switch) sends command signals to the gauge. The gauge converts them to CAN protocol and sends them through the CAN bus to the iBR module on the iBR actuator. The actuator then moves the iBR gate which moves the nozzle to the desired trim position.

NOTE: The nozzle and iBR gate move together in the VTS trim range up to the maximum nozzle down position. If NEUTRAL, BRAKING or REVERSE is engaged, the iBR gate moves past the VTS full down position. When FORWARD thrust is reengaged, the nozzle and iBR gate move up to the last selected VTS trim position.

The nozzle trim position can be seen on the VTS position indicator in the information center.

NOTE: Changing the VTS trim position without the engine running in forward thrust mode only changes the indication. The nozzle will move to the selected VTS trim position when forward thrust is engaged.

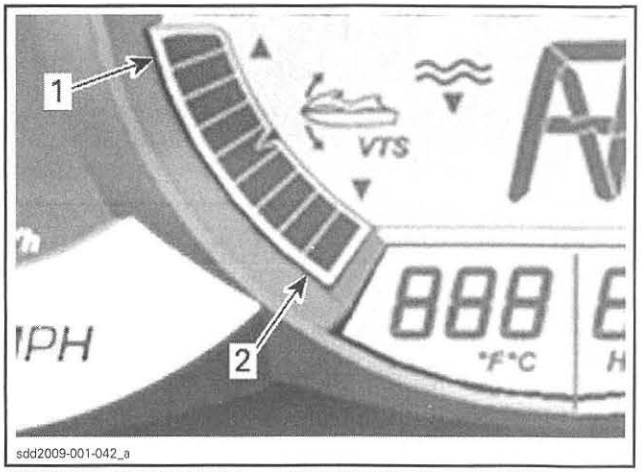

INFORMATION CENTER — VTS POSITION INDICATOR
1. Bow up
2. Bow down

NOTE: Only the segment indicating the relative position of the VTS will be on. The illustration shows all segments on as can be seen during the self test function.

The VTS system provides the following features according to models

- Nozzle trimming
- Selection of 2 preset trim positions
- Recording of 2 preset trim positions.

Nozzle Trimming

Watercraft must be operating in forward position.

Depending on the model, 5 or 9 trim positions are available.

Using the VTS Button (LH Side of Handlebar)

Press the UP or DOWN arrow button to change the VTS setting.

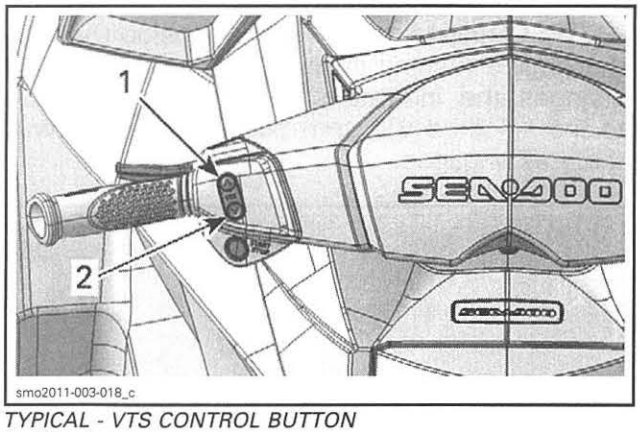

TYPICAL - VTS CONTROL BUTTON
1. *Bow up*
2. *Bow down*

Using the Up/Down Button (RH Side of Handlebar)

1. Press the MODE button to display the VTS function in the gauge.
2. Press the UP or DOWN arrow button to change the VTS setting.

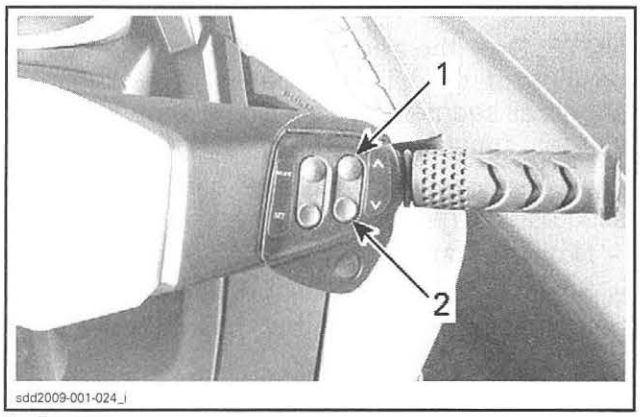

1. *Bow up*
2. *Bow down*

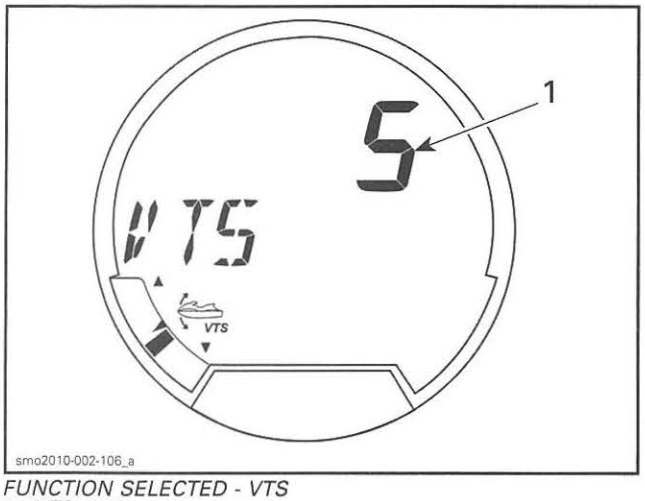

FUNCTION SELECTED - VTS
1. *VTS setting*

3. Press the SET button to save the desired setting.

Using Preset Trim Positions

Two preset trim positions can be selected.

To select the **highest** trim position recorded, double-click on the VTS UP arrow button (bow up).

To select the **lowest** trim position recorded, double-click on the VTS DOWN arrow button (bow down).

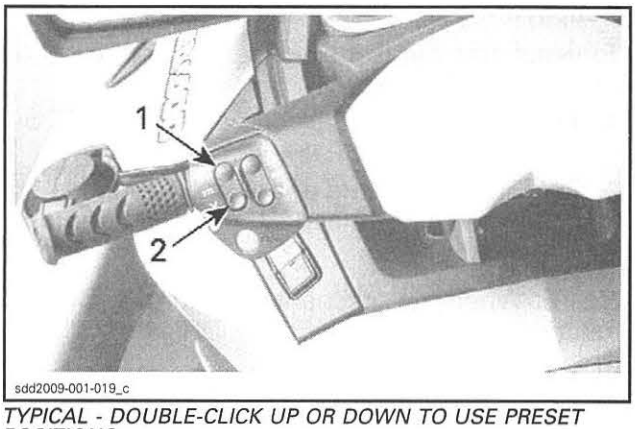

TYPICAL - DOUBLE-CLICK UP OR DOWN TO USE PRESET POSITIONS
1. *Highest preset position on UP arrow*
2. *Lowest preset position on DOWN arrow*

Recording Preset Trim Positions

Two different VTS trim positions may be recorded for quickly selecting the preferred watercraft trim attitude.

When the VTS PRESET trim positions are changed, the new settings will remain recorded in memory.

To record VTS preset trim positions:

1. Press the START/STOP button.
2. Install the tether cord on the engine cut-off switch.
3. Press the MODE button repeatedly until VTS MODE is displayed.

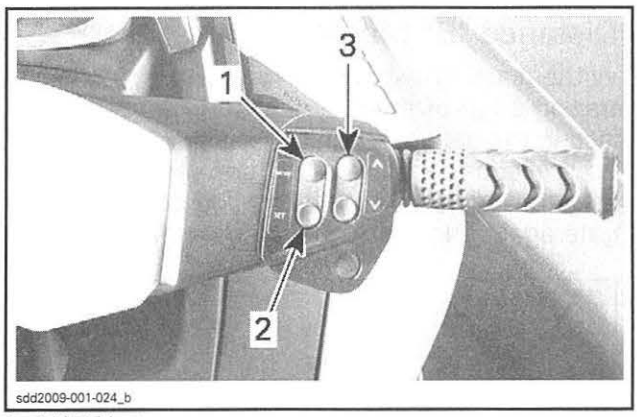

1. *MODE button*
2. *SET button*
3. *UP/DOWN arrow button*

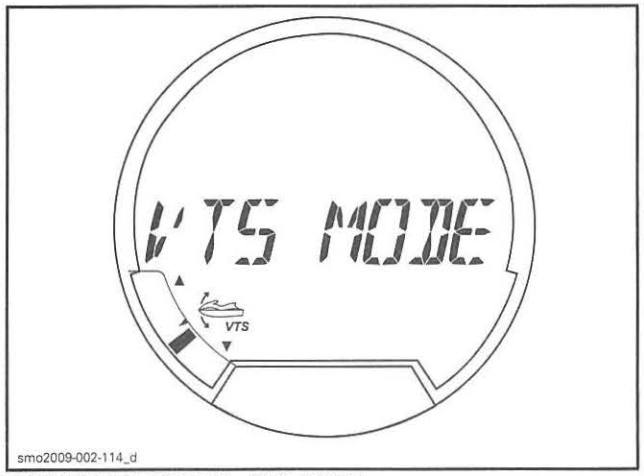

FUNCTION SELECTED - VTS MODE

4. Press the SET button to display PRESET 1.
5. Press the VTS UP/DOWN button to change the PRESET 1 VTS position.

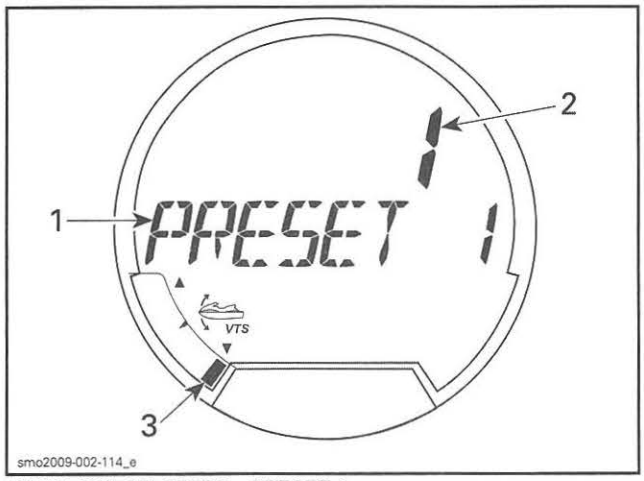

FUNCTION SELECTED - PRESET 1
1. *Preset 1 function*
2. *VTS setting selected to 1*
3. *VTS position indicator at setting 1 (bow down)*

6. Press the SET button to save PRESET 1 and display PRESET 2.
7. Set PRESET 2
8. Press the SET button to save the settings.

NOTE: The VTS system will compare the preset trim settings recorded, the highest position will be assigned to the UP arrow (bow up), the lowest to the DOWN arrow.

ADJUSTMENT

IBR NEUTRAL ADJUSTMENT

When in NEUTRAL, if the watercraft creeps forward or backward, the iBR system may be trimmed.

If the watercraft is moving forwards, momentarily press the DOWN arrow button on RH side of handlebar.

If the watercraft is moving backwards, momentarily press the UP arrow button on RH side of handlebar.

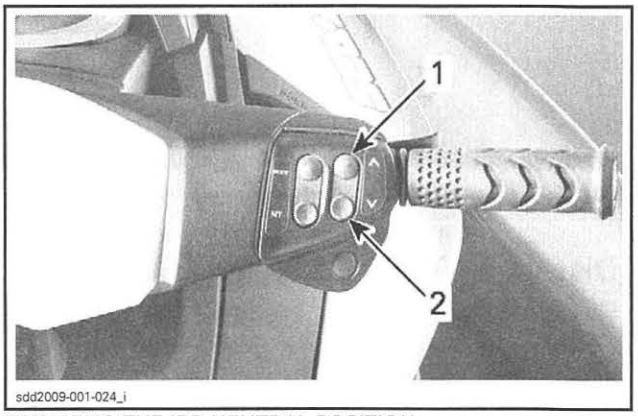

TRIMMING THE iBR NEUTRAL POSITION
1. *UP arrow button (to stop rearward movement)*
2. *DOWN arrow button (to stop forward movement)*

NOTE: Press the UP/DOWN arrow button repeatedly until proper adjustment of the neutral position is attained and the watercraft stops moving.

MAINTENANCE

iBR GATE BACKLASH CHECK

1. Using the iBR override function, move the iBR gate to the up position. Refer to *SYSTEM DESCRIPTION (iBR)* in this subsection.

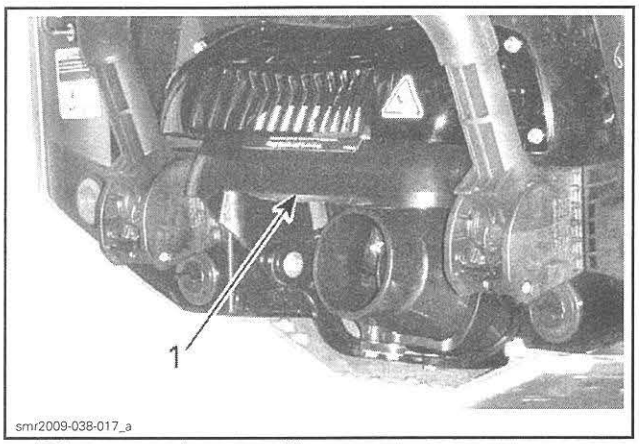

1. iBR gate moved to up position

2. Take hold of the lower edge of the iBR gate and pull down on it slightly, then release it.

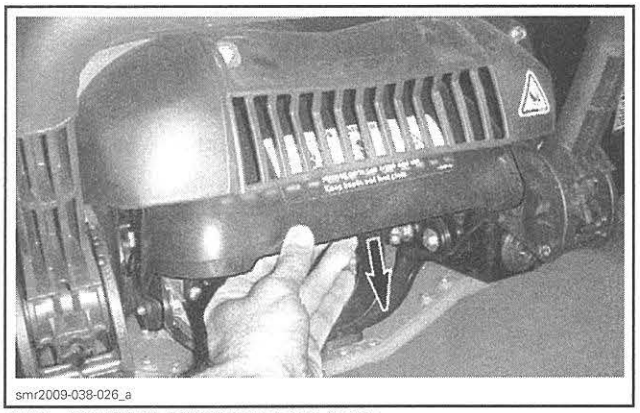

PULL DOWN SLIGHTLY ON iBR GATE

Distance "A" Measurement

Using a machinists ruler, measure the distance between the bottom of the guard and the trailing edge of the iBR gate. Note as measurement "A".

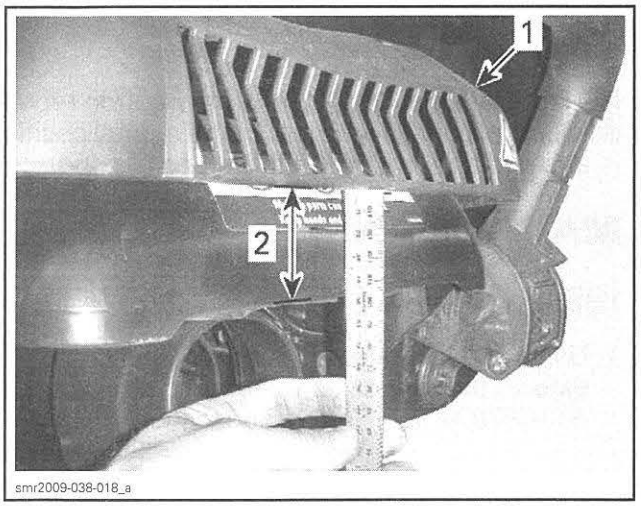

1. iBR guard
2. Measurement "A"

Distance "B" Measurement

Without using excessive force, push up on the trailing edge of the iBR gate to pick up the backlash in the gate mechanism. As you hold the gate up, measure the distance between the trailing edge of the guard and the trailing edge of the iBR gate again. Note as measurement "B".

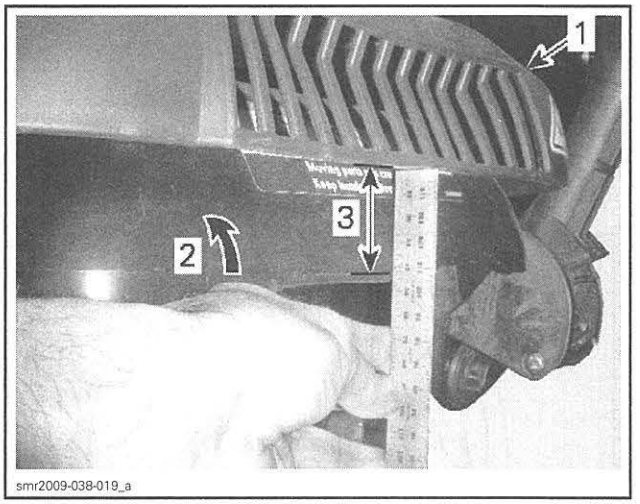

1. iBR guard
2. Lift up on iBR gate
3. Measurement "B"

iBR Gate Backlash Calculation

Subtract measurement "B" from "A" to obtain the iBR gate backlash.

iBR GATE BACKLASH (A - B)	
MAXIMUM	25 mm (.98 in)

Backlash Measurement Result

If backlash is excessive, inspect and replace iBR gate parts as required in the following order:

1. Tightening of screws retaining the U-arm to the actuator shaft
2. Ribs on actuator shaft end and in U-arm
3. Friction sleeves
4. Bushings
5. Contact points (VTS trim ring, U-arm, iBR gate)
6. iBR actuator.

Check iBR gate backlash and gate operation after parts replacement and reassembly.

FRICTION SLEEVE REPLACEMENT

The 4 friction sleeves on the VTS trim ring should be replaced if they show signs of advanced wear (flat spots), or every 100 hours as per the maintenance schedule.

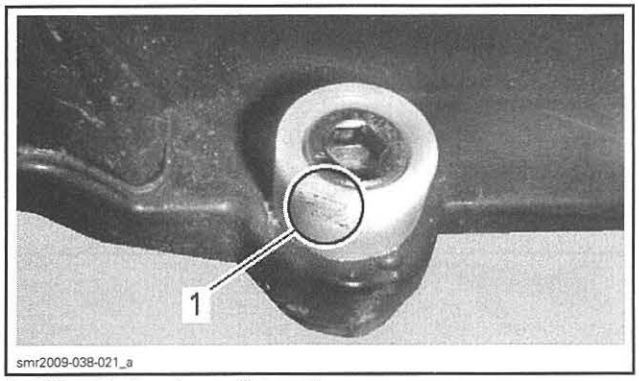

1. Worn friction sleeve (flat spot)

1. To replace the friction sleeves, remove the iBR gate and VTS ring as an assembly, refer to *iBR GATE AND VTS RING REMOVAL* in this subsection.

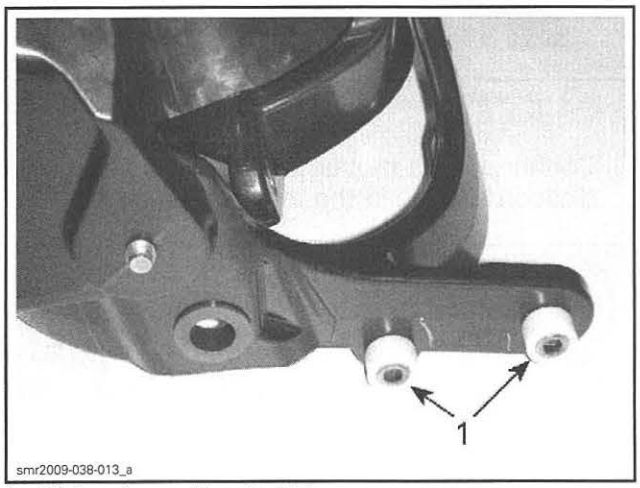

1. Friction sleeves (2 each side)

2. Remove the worn friction sleeves from the VTS ring and install new ones.
3. Apply service products, torques, and install new screws with threadlocker as specified in the exploded view.

INSPECTION

IBR SYSTEM FUNCTIONAL TEST

Test on Dry Land

NOTE: This test requires two persons. One person to start engine and operate controls, and one person to observe iBR gate movement.

1. Provide adequate ventilation of exhaust gases or move watercraft outside.

NOTICE **Do not install an exhaust ventilation hose in the iBR gate area or damage may occur when the iBR gate moves downward during operation.**

2. Connect a water hose to the watercraft to provide exhaust system cooling when operating engine. Refer to *EXHAUST SYSTEM* subsection for procedure.

NOTICE

- **Ensure there are no tools or other object that may interfere with the iBR gate movement.**
- **Do not run engine for more than 2 minutes out of water or damage may occur to drive shaft seal carrier.**

⚠ WARNING

The person observing the iBR gate movement must stand to the side of the stern well clear of the iBR gate and pump nozzle in full view of the operator.

3. Start engine and let idle.

NOTE: If iBR gate was not in the neutral position, it will move to the neutral position on engine start up.

4. Depress the throttle lever slightly and visually confirm the iBR gate moves to the forward position (up to the VTS trim position), then release throttle. The iBR gate must remain in the forward position.
5. Depress the iBR lever fully and confirm the iBR gate moves to the full down position.
6. Release the iBR lever completely and confirm the iBR gate moves to the neutral position.
7. Disconnect water hose then shut engine off.

Test with Watercraft on a Waterway

1. Start engine and let idle.

NOTE: If iBR gate is not in the neutral position before the engine start, it will move to the neutral position on engine start up.

2. Depress the throttle lever slightly, then release it. Forward movement of the watercraft confirms the iBR gate has moved to the forward position.
3. Depress the iBR lever fully. Rearward movement of the watercraft confirms the iBR gate has moved to the reverse position.
4. Release the iBR lever completely. Reverse thrust should cease and the watercraft should continue to drift rearward on momentum.
5. Apply a small amount of forward thrust to stop rearward velocity, then tap the iBR lever to return the iBR gate to neutral.
6. Shut engine off.

VTS FUNCTIONAL TEST

NOTE: This test requires two persons. One person to start engine and operate controls, and one person to observe nozzle and iBR gate movement.

1. Provide adequate ventilation of exhaust gases or move watercraft outside.

NOTICE **Do not install an exhaust ventilation hose in the iBR gate area or damage may occur when the iBR gate moves downward during operation.**

2. Connect a water hose to the watercraft to provide exhaust system cooling when operating engine. Refer to *EXHAUST SYSTEM* subsection for procedure.

NOTICE

- **Ensure there are no tools or other object that may interfere with the iBR gate movement.**
- **Do not run watercraft for more than 2 minutes out of water or damage may occur.**

⚠ WARNING

The person observing the iBR gate movement must stand to the side of the stern well clear of the iBR gate and pump nozzle in full view of the operator.

NOTE: The VTS system cannot be tested without the engine operating in forward thrust. If the engine is not running in forward thrust, only the VTS indication will change when the VTS control button is pressed; the nozzle will not change position until forward thrust is engaged by pulling the throttle lever.

3. Start engine.
4. Pull in and release the throttle lever to engage forward thrust, allow engine to run at idle RPM.

Models with a VTS Switch

5. Push the VTS UP and DOWN button alternately to check VTS operation.

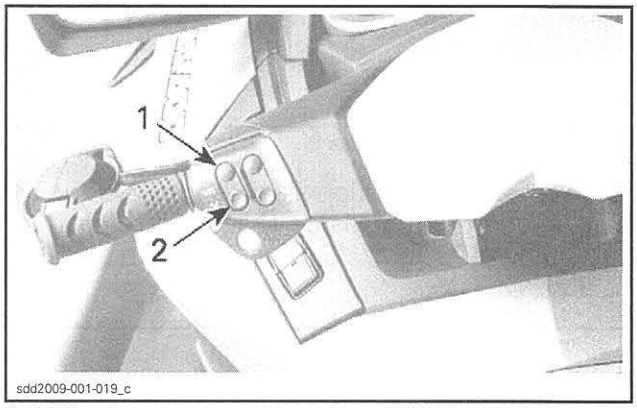

1. VTS up button
2. VTS down button

6. Confirm nozzle movement and VTS position indication change in the information center.

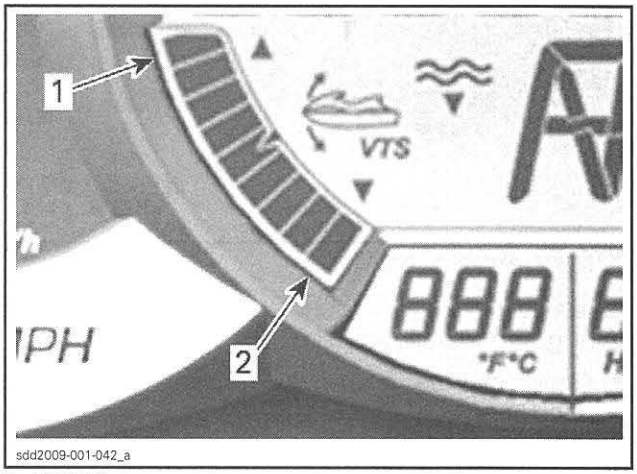

1. Bow up
2. Bow down

NOTE: Only the segment indicating the relative position of the VTS will be on. The illustration shows all segments on as visible during the gauge self test function.

7. Double click the VTS UP and DOWN button alternately to test the VTS preset trim positions.

If double clicking the VTS UP or DOWN button does not cause the nozzle position or indication to change, navigate to the VTS MODE function in the gauge and check for recorded PRESET 1 and PRESET 2 settings. If no presets are recorded, record PRESET 1 bow up and PRESET 2 bow down, exit the function and carry out a new test.

If both PRESET 1 and PRESET 2 have the same setting, note the operator's setting and change one PRESET, exit the function and carry out a new test. Return the PRESET to the operator's preference after testing is complete.

Models Without a VTS Switch

8. Press the MODE button to display VTS.

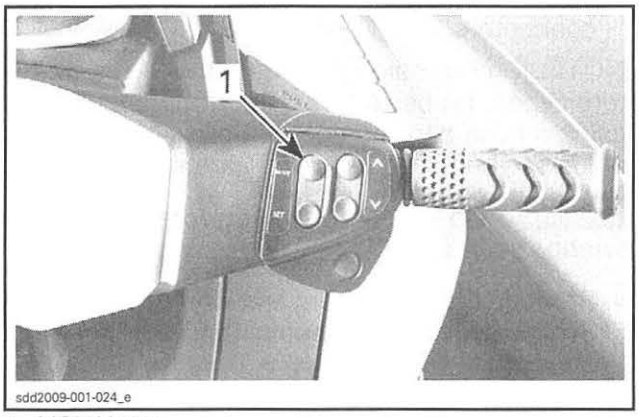

1. MODE button

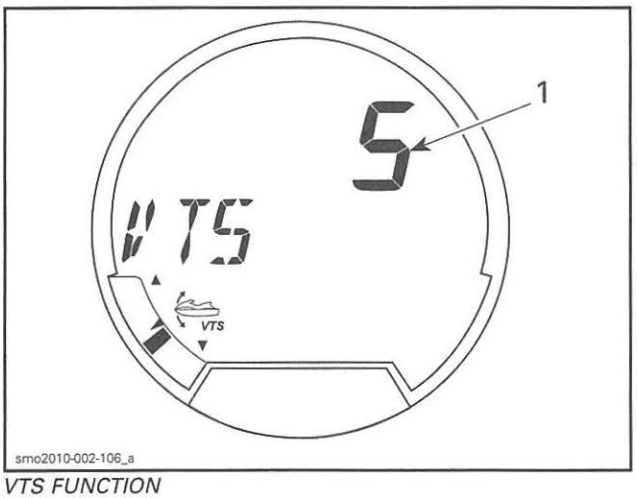

VTS FUNCTION
1. VTS setting

9. Press the UP/DOWN arrow button (RH handlebar) to change the VTS angle.

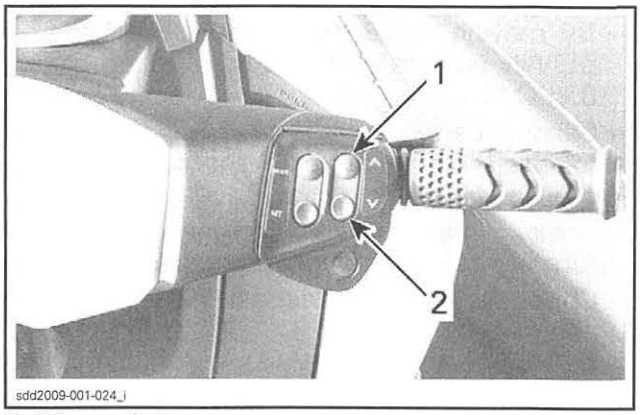

1. UP arrow button
2. DOWN arrow button

10. Ensure the VTS setting in the gauge moves with the VTS.

TROUBLESHOOTING

The iBR system is self monitoring. If a fault occurs in the iBR system, it will raise a fault code and communicate it to the information center through the CAN bus. The information center will turn on the iBR indicator light to advise the operator of the iBR system fault. If the fault remains active, it may be displayed in the gauge. If it is no longer active, B.U.D.S. must be used to read the fault.

TESTING SEQUENCE

To troubleshoot the iBR system, carry out the following in this order:

- Ensure the iBR gate movement is not obstructed in any way.
- Ensure the iBR gate mechanisms (gate, VTS ring, U-arm and linkages) are all in good condition and do not show signs of excessive wear or friction.
- Cycle the iBR gate up and down using the *iBR OVERRIDE* function as described in this subsection.
- Check the iBR power fuse (F5) and the iBR control fuse (F17) in fuse box if the gate did not move using the iBR OVERRIDE function.
- Connect the watercraft to B.U.D.S. to check for iBR system or CAN bus related fault codes. Carry out service actions as indicated in B.U.D.S.
- If a CAN bus communication fault with the iBR module is indicated, or the iBR module is not visible in B.U.D.S., carry out a continuity test of the CAN bus wires between the iBR module and the CAN bus-bars in fuse box. Refer to *CONTROLLER AREA NETWORK (CAN)* subsection.

- Try moving the iBR using the iBR UP and iBR DOWN buttons on the iBR activation page in B.U.D.S.
- Carry out an *iBR SYSTEM FUNCTIONAL TEST* to check for proper gate and actuator movement.
- Visually inspect system connectors for moisture ingress, corrosion, and proper contact.
- Check for excessive backlash in the gate mechanism.
- Remove the screws retaining the U-arm to the actuator shaft. Move the gate up and down by hand to check for freedom of movement.

PROCEDURES

iBR LEVER SENSOR (BRLS)

BRLS Test Using B.U.D.S.

NOTE: The BRLS is composed of a twin hall effect sensor. A resistance test of the sensor cannot be carried out.

1. Connect watercraft to the latest B.U.D.S. software, refer to *COMMUNICATION TOOLS AND B.U.D.S.*
2. Check for an applicable fault code, refer to *DIAGNOSTIC AND FAULT CODES*.
3. If a fault is indicated, follow service actions as indicated in B.U.D.S.

BRLS Voltage Test

Test for BRLS input voltage as well as BRLS signal voltages as per following steps.

Models with Suspension

1. Press the START/STOP button.
2. Install the tether cord on the engine cut-off switch to energize the electrical system.

NOTE: DO NOT start the engine.

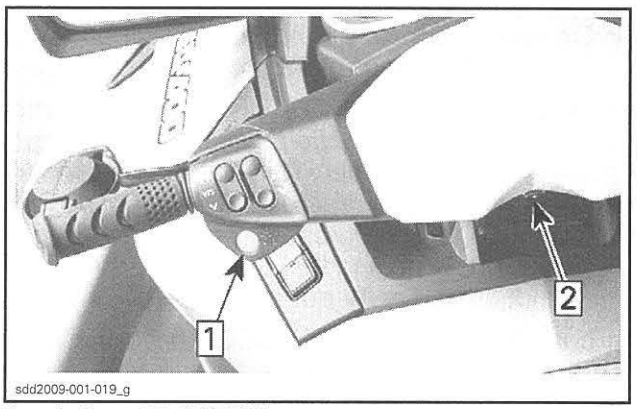

Step 1: Press START/STOP button
Step 2: Install tether cord

NOTE: Briefly press the START/STOP button to reactivate the electrical system when required.

3. Set the suspension to its maximum height. This will provide better access to the steering connectors.

NOTE: If more height is required or if the iS system cannot be used, manually lift the suspension using a hoist and the anchor points close to handlebars. Then safety lock it in the up position.

NOTICE **Do not lift the watercraft using the anchor points.**

4. Remove the tether cord and wait approximately 3 minutes for the electrical system power to shut off.

All Models

5. Open the front storage compartment cover and remove the storage bin.

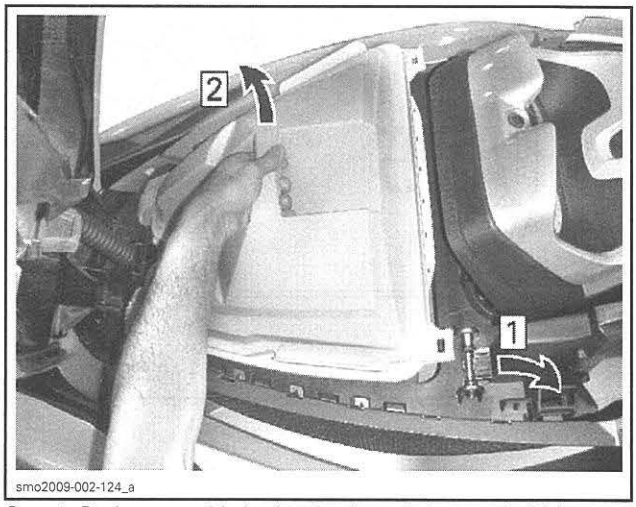

Step 1: Push storage bin latches backwards (one each side)
Step 2: Lift and tilt forward to remove storage bin

Models Without Suspension

6. Disconnect the top of the two front air ventilation hoses, refer to *BODY* subsection.

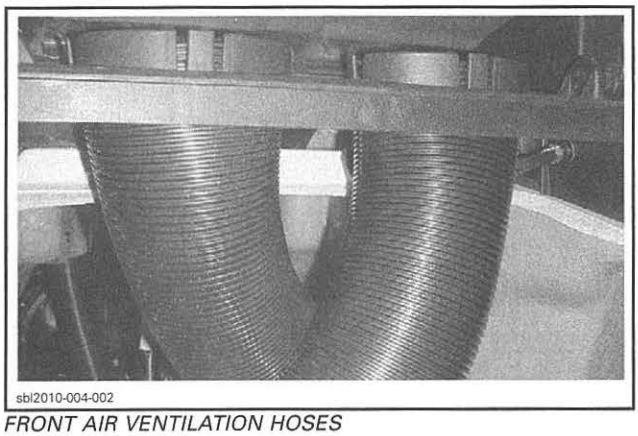

FRONT AIR VENTILATION HOSES

All Models

7. Reach in through the storage bin opening under the steering area and disconnect the 24-pin steering connector.

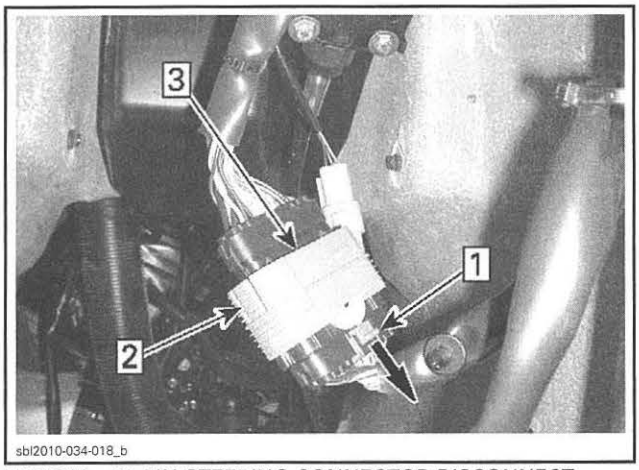

TYPICAL - 24-PIN STEERING CONNECTOR DISCONNECT
Step 1: Pull out safety lock
Step 2: Press in on release tab
Step 3: Pull locking collar down

8. Connect the DIAGNOSTIC HARNESS (P/N 529 036 188) in series between the disconnected steering connectors.

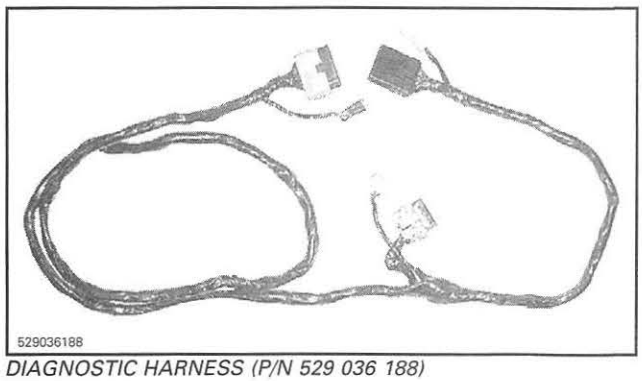

DIAGNOSTIC HARNESS (P/N 529 036 188)

9. Press the START/STOP button to wake up the electrical system.
10. Install the tether cord on the engine cut-off switch.

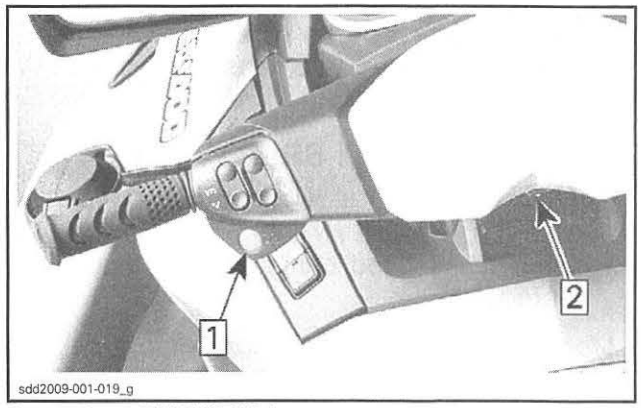

Step 1: Press START/STOP button
Step 2: Install tether cord

NOTE: Briefly press the START/STOP button to reactivate the electrical system when required.

11. Using a FLUKE 115 MULTIMETER (P/N 529 035 868) set to Vdc, measure the BRLS voltages from the test connector of the diagnostic harness as per following tables.

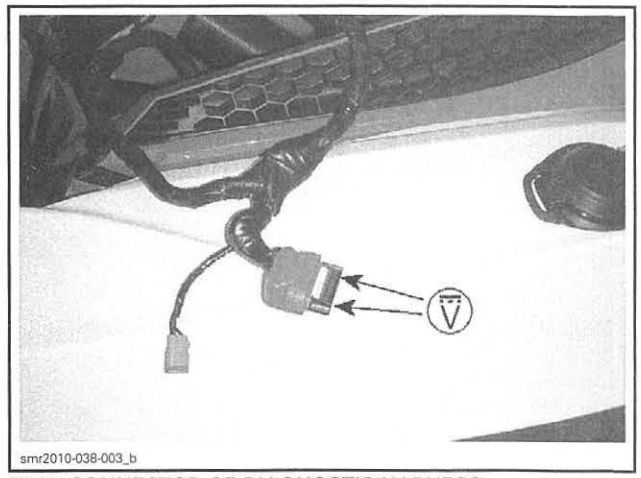

TEST CONNECTOR OF DIAGNOSTIC HARNESS

TEST CONNECTOR OF DIAGNOSTIC HARNESS		iBR LEVER RELEASED	iBR LEVER PULLED IN
PINS		VOLTAGE (Vdc)	
21	15	4.9 - 5.1	
22	16		
15	18	0.15 - 0.35	1.4 - 1.6
19	16	0.4 - 0.6	2.9 - 3.1

12. If voltage measured is as specified, the BRLS sensor is functioning properly.

NOTE: When moving iBR lever, BRLS voltage change should increase or decrease in a steady linear fashion.

13. If voltage is out of specification, carry out a continuity test of the wiring between the iBR module and the BRLS sensor, refer to *CONTINUITY TEST OF BRLS WIRING HARNESS*.

Continuity Test of BRLS Wiring Harness

1. Ensure the 24-pin steering connector pins are clean, make good contact, and properly connected.

Models Without the X Package

2. Remove the steering cover, refer to *STEERING AND O.T.A.S.* subsection.

Models with the X Package

3. Remove the upper housing and housing cover from the LH handlebar housing, refer to *STEERING AND O.T.A.S.* subsection.

All Models

4. Disconnect the BRLS connector.

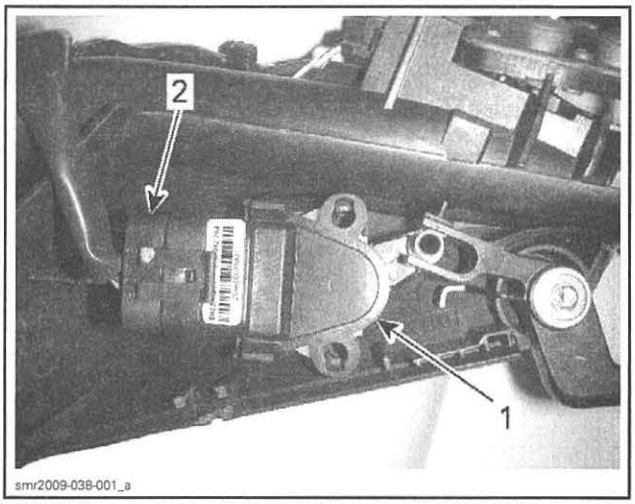

TYPICAL
1. BRLS
2. BRLS connector

Disconnect the 12-pin connector from the iBR actuator. Refer to *IBR ACTUATOR CONNECTORS ACCESS* in this subsection.

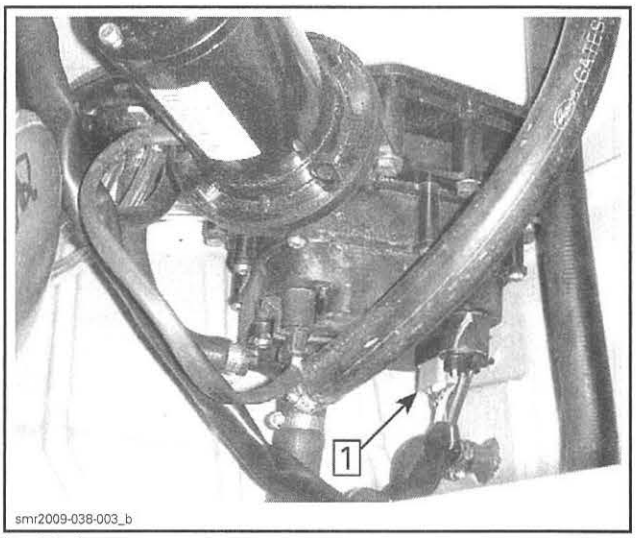

1. 12-pin connector

5. Measure for continuity from the BRLS connector to the 12-pin iBR actuator connector as per following table.

CONTINUITY TEST OF BRLS WIRING HARNESS		
BRLS CONNECTOR	12 PIN iBR CONNECTOR	RESISTANCE
Pin A (VI/BE)	Pin 4 (VI/BE)	Close to 0 Ω (continuity)
Pin B (BK)	Pin 6 (BK)	
Pin C (YL/BR)	Pin 8 (YL/BR)	
Pin D (VI/BE)	Pin 7 (VI/BE)	
Pin E (BK)	Pin 9 (BK)	
Pin F (YL/WH)	Pin 5 (YL/WH)	

If continuity is good, replace BRLS.

If an open circuit or a higher than normal resistance is measured, carry out the continuity tests in the following tables to find the problem wire or connection:

- From the BRLS to the 24-pin steering connector
- From the steering connectors to the iBR actuator 12 pin connector.

6. Connect the DIAGNOSTIC HARNESS (P/N 529 036 188) to the steering connector **(steering side only)**.

NOTE: Resistance readings may be slightly higher than normal (maximum .5 Ω) when measuring from the test connector on the diagnostic harness.

CONTINUITY TEST BRLS TO 24-PIN STEERING CONNECTOR		
BRLS	TEST CONNECTOR	RESISTANCE
Pin A (VI/BE)	Pin 21 (VI/BE)	Close to 0 Ω (continuity)
Pin B (BK)	Pin 15 (BK)	
Pin C (YL/BR)	Pin 18 (YL/BR)	
Pin D (VI/BE)	Pin 22 (VI/BE)	
Pin E (BK)	Pin 16 (BK)	
Pin F (YL/WH)	Pin 19 (YL/WH)	

7. Connect the DIAGNOSTIC HARNESS (P/N 529 036 188) to the steering connector **(vehicle side only)**.

CONTINUITY TEST STEERING CONNECTORS TO iBR CONNECTOR		
TEST CONNECTOR	12 PIN iBR	RESISTANCE
Pin 22 (VI/BE)	Pin 7 (VI/BE)	Close to 0 Ω (continuity)
Pin 16 (BK)	Pin 9 (BK)	
Pin 19 (YL/WH)	Pin 5 (YL/WH)	
Pin 21 (VI/BE)	Pin 4 (VI/BE)	
Pin 15 (BK)	Pin 6 (BK)	
Pin 18 (YL/BR)	Pin 8 (YL/BR)	

8. Repair or replace wiring/connector as required.

BRLS Removal

Models Without the X Package

1. Remove steering cover, refer to *STEERING AND O.T.A.S.* subsection.

Models with the X Package

2. Remove the upper housing and housing cover from the LH handlebar housing, refer to *STEERING AND O.T.A.S.* subsection.

All Models

3. Open the sensor retaining tabs.
4. Pull up on the connector end of the BRLS.
5. Gently pull the sensor from its support and the iBR lever. Depress the lever as required to ease sensor removal.

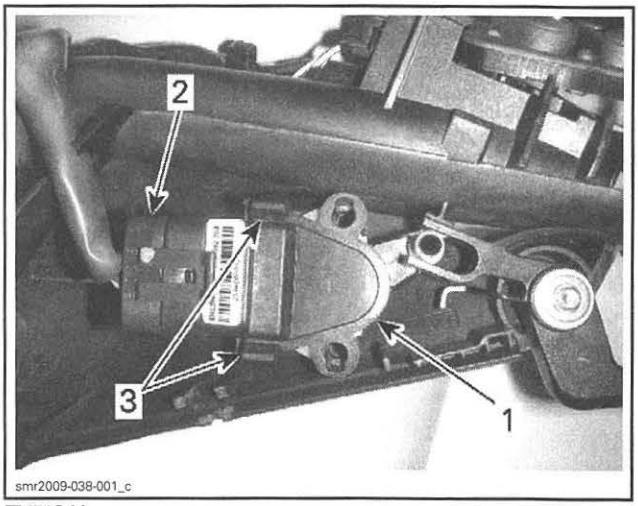

TYPICAL
1. BRLS
2. BRLS connector
3. Sensor retaining tabs

6. Remove connector from the BRLS.

BRLS Installation

Models Without the X Package

1. Install BRLS sensor in the reverse order of removal.
2. Ensure wiring harness is properly routed through slot provided in sensor support before installing steering cover.



1. Wire harness routed in slot

3. Ensure there are no fault codes. Connect watercraft to the latest B.U.D.S. software, refer to *DIAGNOSTIC AND FAULT CODES*.
4. Carry out an *iBR SYSTEM FUNCTIONAL TEST* using the iBR lever (engine must be running).

Models with the X Package

Install BRLS sensor in the reverse order of removal. However, pay attention to the following:

1. Install connector on BRLS and ensure wiring is properly positioned in handlebar housing.

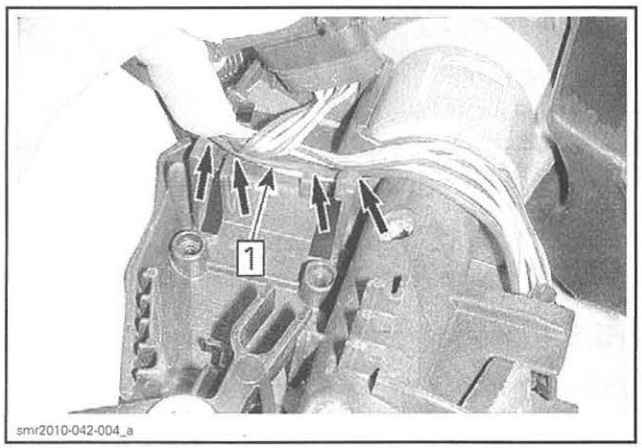

Step 1: Ensure proper wire routing

2. Insert the BRLS in the iBR lever.
3. Align the BRLS in the housing, then press it into the housing until both locking tabs engage. Ensure it is properly locked in place.
4. Ensure wiring is not pinched.
5. Position the housing cover onto the handlebar housing.
6. Ensure positioning of corrugated conduit

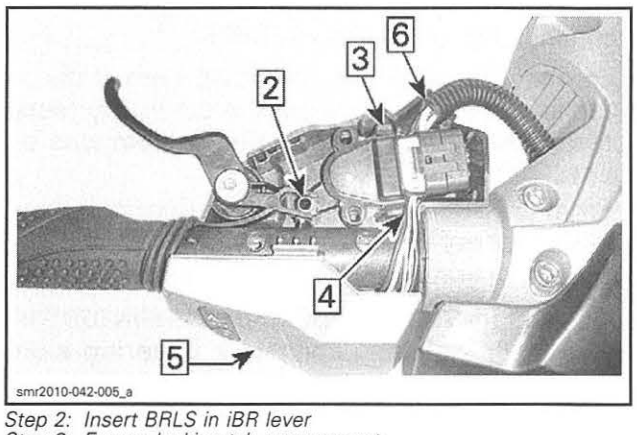

Step 2: Insert BRLS in iBR lever
Step 3: Ensure locking tab engagement
Step 4: Ensure wiring is not pinched
Step 5: Install housing cover
Step 6: Ensure proper corrugated conduit positioning

7. Position the upper housing onto the handlebar.
8. Ensure proper engagement of the housing and cover tabs.

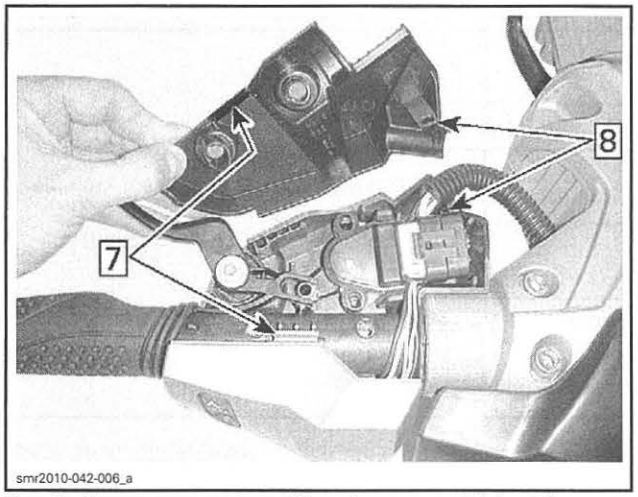

Step 7: Ensure engagement of housing cover retaining tabs
Step 8: Ensure engagement of upper housing locking tabs

9. Install the three retaining screws for the upper housing and torque them to 2 N•m (18 lbf•**in**).
10. Ensure there are no fault codes. Connect watercraft to the latest B.U.D.S. software, refer to *DIAGNOSTIC AND FAULT CODES*.
11. Carry out an *iBR SYSTEM FUNCTIONAL TEST* using the iBR lever (engine must be running).

iBR ACTUATOR

NOTICE **The iBR actuator motor must never be tested by applying 12 Vdc directly to it's connector. Doing so may cause a lock-up and damage internal actuator components, necessitating replacement of the iBR actuator assembly.**

iBR Actuator Operation Test Using B.U.D.S.

1. Connect watercraft to the latest B.U.D.S. software, refer to *COMMUNICATION TOOLS AND B.U.D.S.*
2. Click the **Read Data** button.
3. Check for applicable fault codes on the **Faults** page.
4. Click the **Activation** tab.
5. In the lower LH corner, click the **iBR** tab.

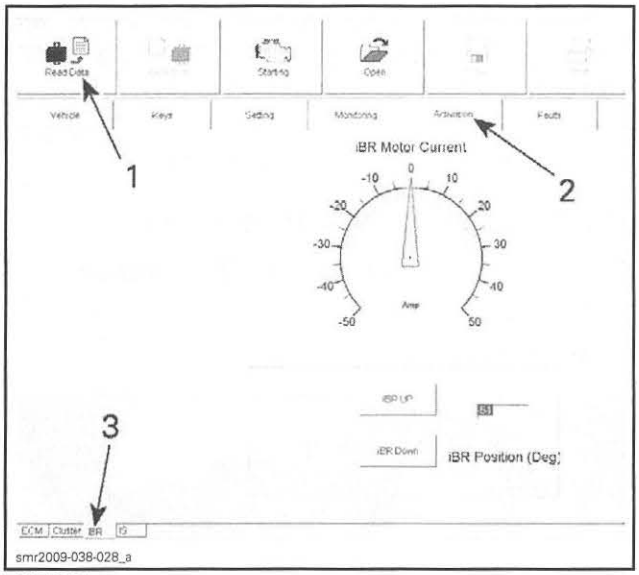

TYPICAL
1. *Read Data*
2. *Activation tab*
3. *iBR tab*

6. In B.U.D.S., click **iBR UP** and **iBR DOWN** buttons alternately and look for a change in **iBR Position (Deg)**.

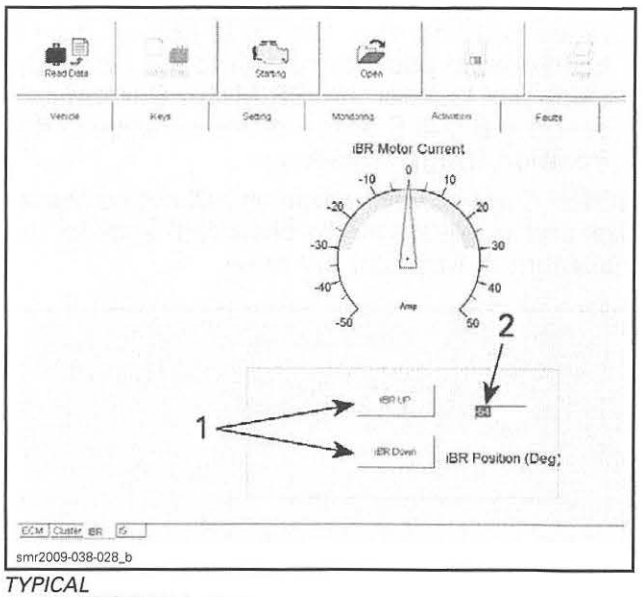

TYPICAL
1. *iBR UP/DOWN buttons*
2. *iBR position indication*

If the iBR moves using these buttons but does not move using the iBR lever, refer to *BRLS VOLTAGE TEST* in this subsection.

If the iBR does not move, check the iBR fuses (F5 and F17) in fuse box. If fuse are good, refer to *iBR ACTUATOR INPUT VOLTAGE TEST* in this subsection.

iBR Actuator Motor Current Test Using B.U.D.S.

1. On the iBR activation page in B.U.D.S., note the **iBR Position (Deg)** indication.

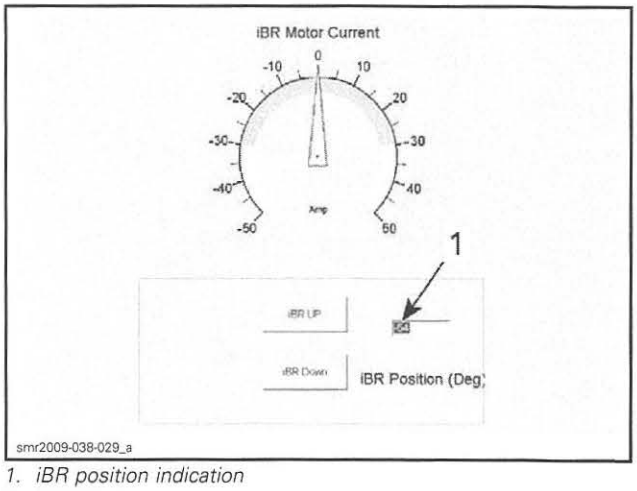

1. *iBR position indication*

2. Activate the iBR override function, refer to *iBR OVERRIDE FUNCTION* in the beginning of this subsection.

3. Press and hold the VTS UP button on the LH handlebar to position the iBR to the full up position and look for the **iBR Motor Current** indication in B.U.D.S. Also look for a change of **iBR Position (Deg)** indication.

NOTE: Current draw indication will not be stable. High and low peaks will be observed. Look for the maximum average current draw.

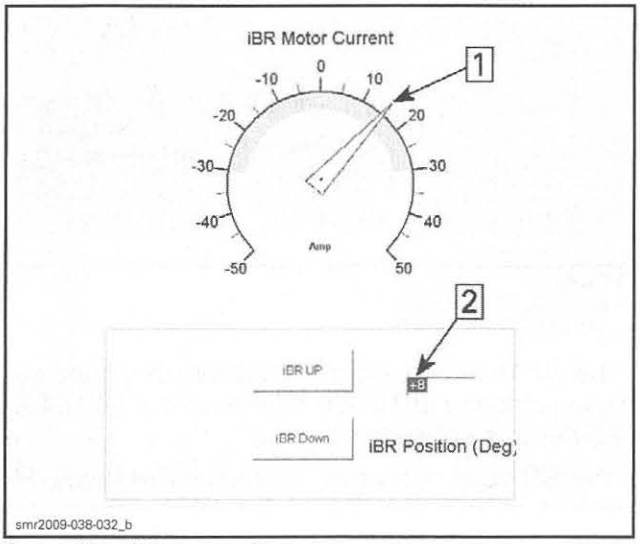

Step 1: Note iBR current draw
Step 2: Note iBR position indication change

4. Press and hold the VTS DOWN button and look for the **iBR Motor Current** draw indication. Also look for a change of **iBR Position (Deg)** indication.

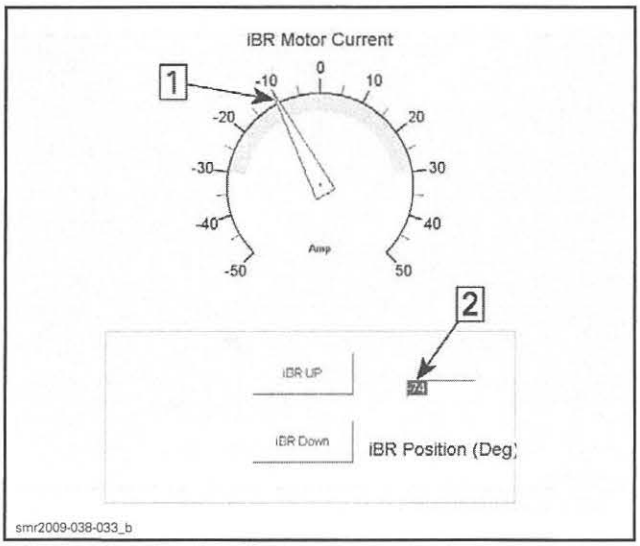

Step 1: Note iBR current draw
Step 2: Note iBR position indication change

iBR ACTUATOR CURRENT DRAW	
DOWN SELECTION	-5 to -15 A
UP SELECTION	+10 to +20 A

If current draw is abnormally high (between 20 and 30 A), check the following:

- Ensure iBR gate is free of debris.
- Remove the screws retaining the U-arm to the actuator shaft. Check for excessive friction in gate movement.
- Check iBR gate friction sleeves and bushings.
- Check for proper voltage to the iBR motor, see *iBR MOTOR VOLTAGE TEST* in this subsection.
- Check for fault codes using B.U.D.S.

Remove debris, replace iBR gate components, or replace the iBR actuator as applicable.

iBR Actuator Connectors Access

GTS, GTI Series, GTR and WAKE Models

Remove seat.

Locate iBR actuator connectors.

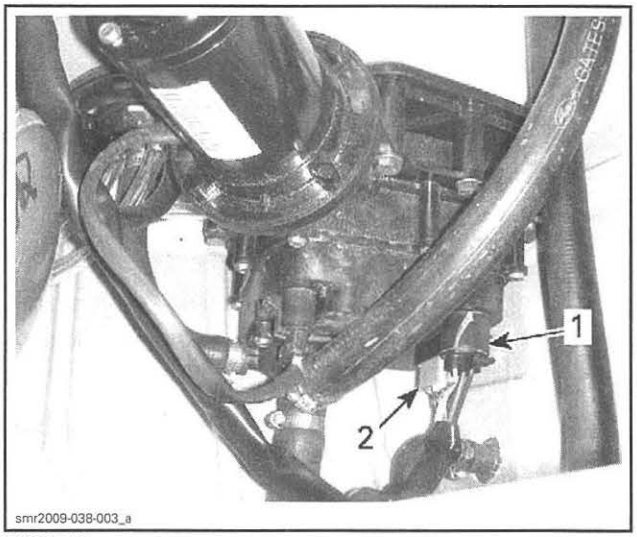

TYPICAL
1. 3-pin connector
2. 12-pin connector

RXP-X Series

Remove iBR ACTUATOR from hull. See procedure in this subsection.

Locate iBR actuator connectors.

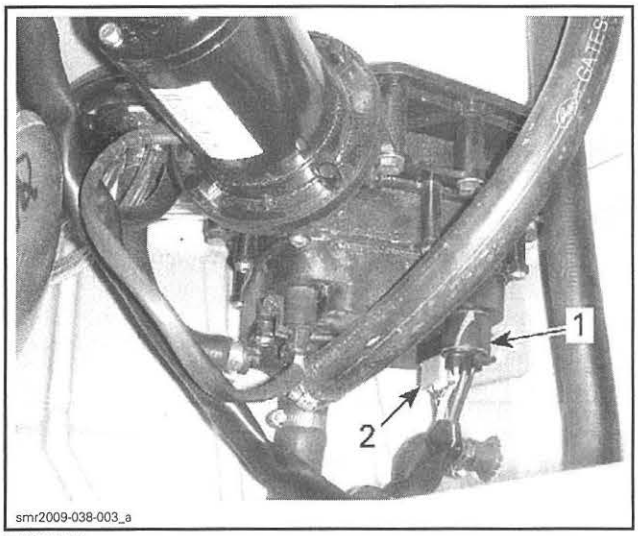

TYPICAL
1. 3-pin connector
2. 12-pin connector

GTX/RXT Series without Suspension and Wake Pro

Remove seat.

Locate iBR actuator connectors.

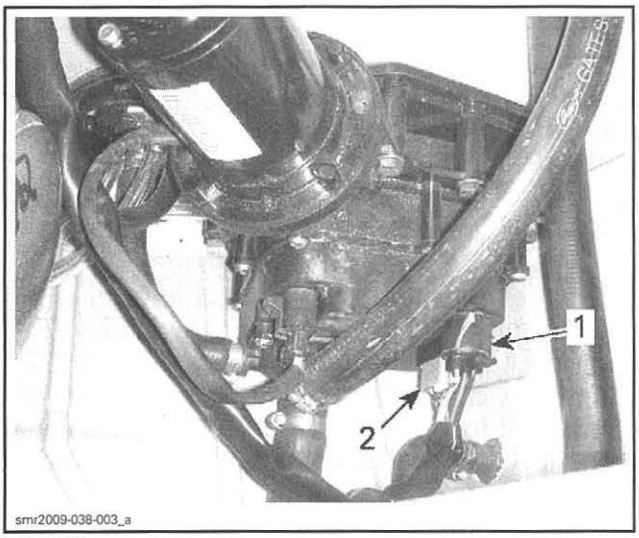

TYPICAL
1. 3-pin connector
2. 12-pin connector

GTX/RXT Series with Suspension

Open the boarding platform and remove the LH storage bin.

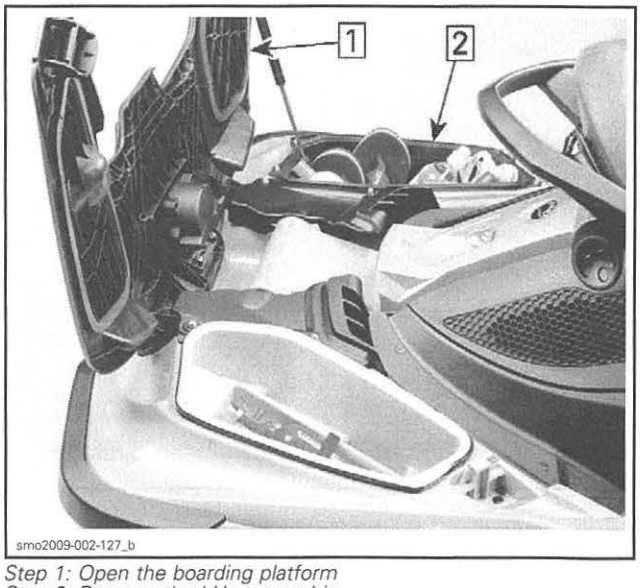

Step 1: Open the boarding platform
Step 2: Remove the LH storage bin

Locate iBR actuator connectors.

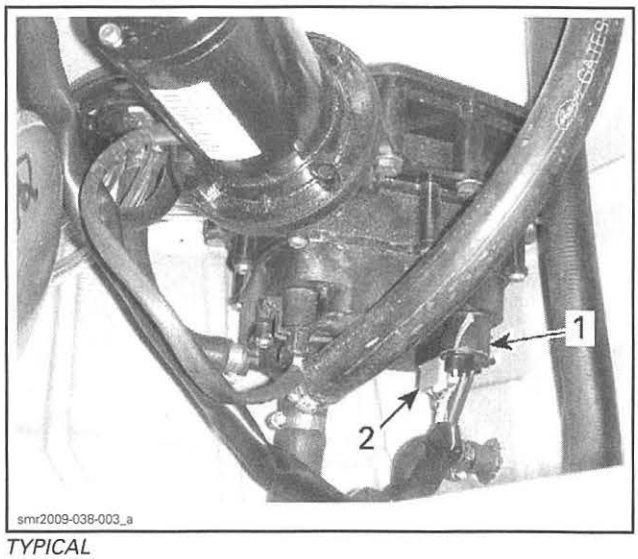

TYPICAL
1. 3-pin connector
2. 12-pin connector

iBR Motor Voltage Test

1. Disconnect the 2-pin connector on iBR module. Refer to *IBR ACTUATOR CONNECTORS ACCESS* in this subsection.

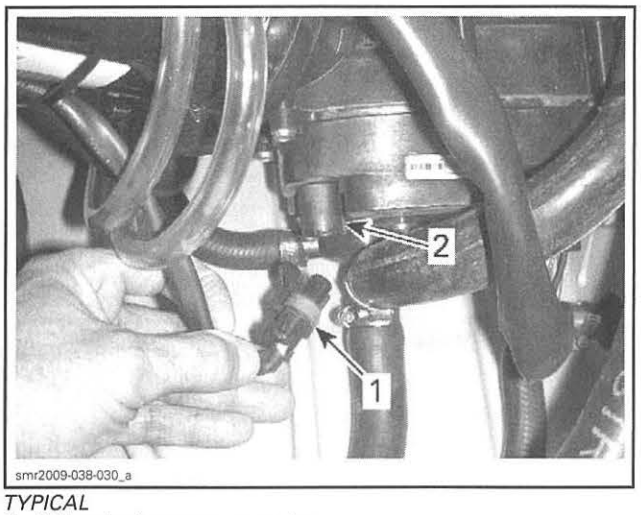

TYPICAL
1. *iBR motor harness connector*
2. *iBR motor module connector*

2. Set the FLUKE 115 MULTIMETER (P/N 529 035 868) to Vdc selection.
3. Install insulated clips on the multimeter leads and clip leads to pins in the motor connector on the iBR module.

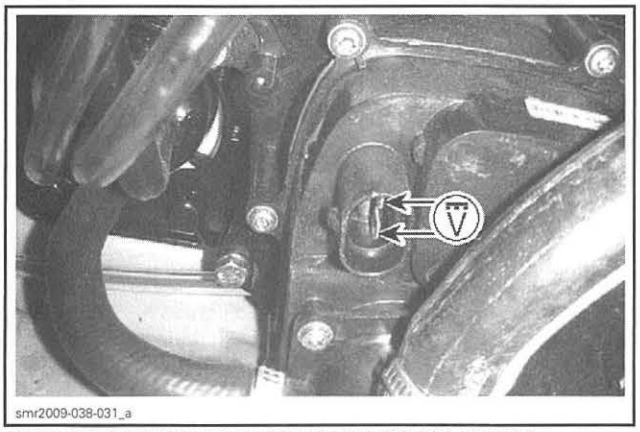

TEST OF iBR MODULE OUTPUT VDC TO iBR MOTOR

GTI Series, GTR, Wake and RXP X Series

Temporary install test wires with a connector to the motor connector on the iBR module. Measure voltage on test wires.

All Models

4. Using the iBR override function (see *SYSTEM DESCRIPTION (iBR* in this subsection), press the VTS UP button and read the iBR module motor output voltage.

NOTE: The iBR UP button on the iBR Activation page in B.U.D.S. may be used instead of the iBR override function.

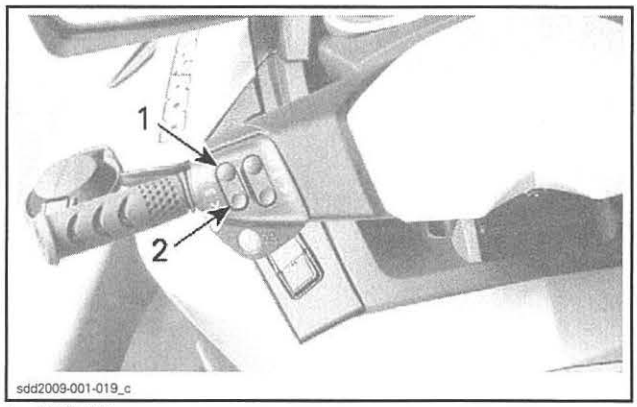

1. *VTS UP*
2. *VTS DOWN*

NOTE: Briefly press the START/STOP button to reactivate the electrical system when required.

5. Press the VTS DOWN button and read the iBR module motor output voltage.

NOTE: The iBR DOWN button on the iBR Activation page in B.U.D.S. may be used instead of the iBR override function.

iBR MOTOR VOLTAGE TEST
Battery voltage (over 12 Vdc)

NOTE: Voltage measured should be battery voltage in both UP or DOWN directions. Voltage polarity should reverse as UP or DOWN button is pressed alternately.

- If battery voltage **is not measured**, refer to *iBR ACTUATOR INPUT VOLTAGE TEST* in this subsection.
- If battery voltage **is measured** in both directions, refer to *iBR POWER TEST USING A TEST LIGHT* in this subsection.
- If battery voltage **is measured** and the test light is **bright** for both iBR UP or DOWN selections, the iBR motor is at fault and the iBR actuator must be replaced.
- If battery voltage **is low** or test light is **dim in both** directions, refer to *iBR ACTUATOR INPUT VOLTAGE TEST* in this subsection.
- If battery voltage **is measured** and test light is **dim in one** direction, replace the iBR actuator.

iBR Power Test Using a Test Light

1. Connect the clip of a 12 Vdc test light to the battery ground (or engine ground).
2. Touch the test light probe to each pin of the motor output connector on the iBR module as you select the iBR UP and DOWN alternately.

The test light should come on bright for one pin only in each direction.

NOTE: The 12 Vdc and ground will alternate between pins with a change of iBR direction.

iBR Actuator Input Voltage Test

RXP X Series

Detach iBR actuator from hull. Refer to *IBR ACTUATOR REMOVAL* in this subsection.

All Models

1. Disconnect the 3-pin and 12-pin connectors from the iBR module. refer to *IBR ACTUATOR REMOVAL* in this subsection.

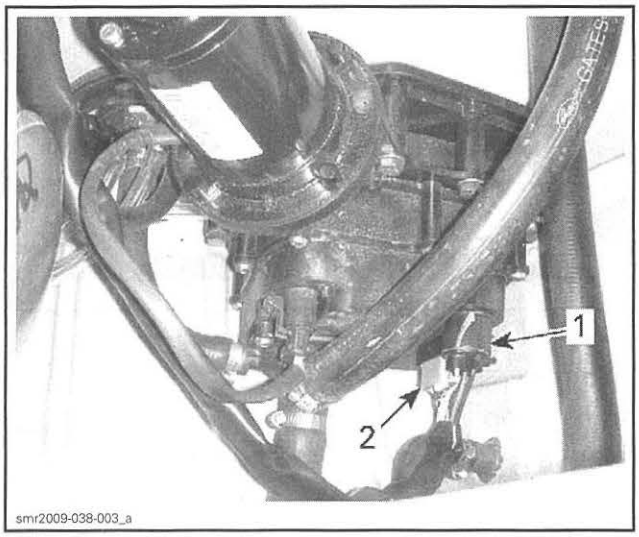

TYPICAL
1. 3-pin connector
2. 12-pin connector

2. Set the FLUKE 115 MULTIMETER (P/N 529 035 868) to Vdc selection.
3. Measure for the battery input voltage (through fuse F5) to the iBR actuator as per following table.

iBR ACTUATOR INPUT VOLTAGE TEST (30 AMP BATTERY POWER)			
3 PIN CONNECTOR		BATTERY	READING
Pin 2	Pin 1	–	Battery voltage
Pin 2	–	Neg. (-) post	

NOTE: The 3-pin connector provides battery power directly to the iBR module for the actuator motor through the fuse F5.

If battery voltage is not measured, check the following:

- iBR fuse F5 in fuse box
- Battery voltage at fuse contact B4 of fuse box
- Wire continuity from pin 2 of iBR 3-pin connector to A4 of fuse box
- Jumper continuity fuse contact B4 to C3 of 12 Vdc bus-bar in fuse box.

If voltage is good to the negative battery post but not to pin 1 of the connector (ground wire to engine), check for an open or bad ground wire (loose, corroded, or pitted terminals, wire continuity, etc.)

If battery voltage measured is as specified, carry out same test using a 12 Vdc test light. Test light should be bright.

If test light is not bright to pin 1 only, look for a bad contact on the ground circuit (loose, corroded, pitted, etc.).

If test light is not bright to the negative battery post, first check voltage at battery terminals to ensure battery is not discharged. If battery voltage is good, look for a bad contact in the 30 amp 12 V iBR power circuit (loose, corroded, pitted, etc.).

If the 30 amp 12 Vdc power to the iBR actuator is good, test for the switched 5 amp 12 Vdc as per following steps.

4. Briefly press the START/STOP button to wake the electrical system.

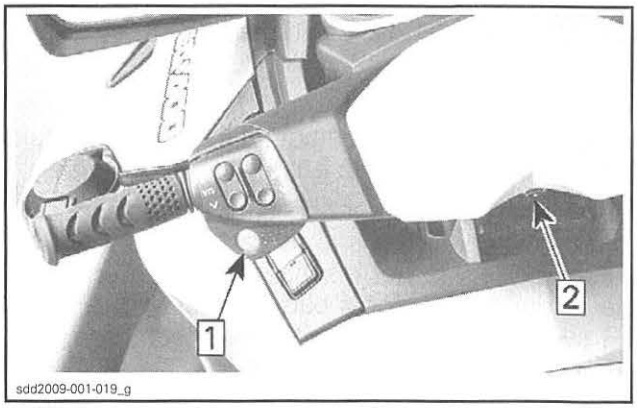

TYPICAL
Step 1: Press START/STOP button
Step 2: Install D.E.S.S. key

5. Measure for the switched input voltage to the iBR actuator as per following table.

iBR ACTUATOR INPUT VOLTAGE TEST (5 AMP SWITCHED)			
iBR CONNECTORS		BATTERY	READING
12 PIN	3 PIN		
Pin 1	Pin 1	-	Battery voltage
Pin 1	-	Neg. (-) post	

NOTE: The 12 pin connector provides BRLS signals, CAN bus, and a switched 12 Vdc power to the iBR module through the fuse F17

If battery voltage is not measured at all, check the following:

- iBR control (CRTL) fuse F17 in fuse box
- Battery voltage at fuse contact E3 of fuse box
- Wire continuity from pin 1 of iBR 12-pin connector to F3 of fuse box
- Jumper continuity fuse contact E3 to D3 of 12 Vdc accessory bus-bar in fuse box.

If voltage is good to the negative battery post but not to pin 1 of the connector (ground wire to engine), check for an open or bad ground wire (loose, corroded, or pitted terminals, wire continuity, etc.).

If battery voltage measured is as specified, carry out same test using a 12 Vdc test light. Test light should be bright.

If test light is not bright to pin 1 of the 3 pin connector, look for a bad contact on the ground circuit (loose, corroded, pitted, etc.).

If test light is not bright to battery negative terminal, first check voltage at battery terminals to ensure battery is not discharged. If battery voltage is good, look for a bad contact in the 12 V iBR switched power circuit (loose, corroded, pitted, etc.).

If the iBR actuator input voltages and ground circuit are good, and there is no CAN bus or BRLS fault, replace the iBR actuator.

iBR Actuator Removal

1. Move the iBR gate to the forward position (full up) using the *iBR OVERRIDE* function. Refer to *SYSTEM DESCRIPTION (iBR)* in this subsection.

NOTICE **Do not try to manually force the iBR gate when all components are installed.**

⚠ CAUTION **Remove iBR fuse (F5) before working in the iBR gate area. Refer to *POWER DISTRIBUTION*.**

GTI Series, GTR, Wake and RXP X Series

From Jet Pump Area

2. Remove iBR gate ass'y. Refer to *IBR GATE* in this subsection.
3. Remove iBR actuator retaining screws.

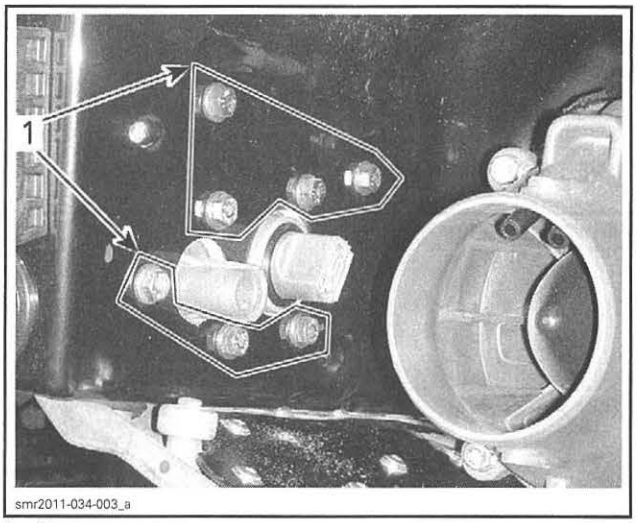

1. Remove screws

4. Remove seat.

From Inside Bilge

5. Cut locking tie.
6. Disconnect hose from muffler.
7. Move hose end away.

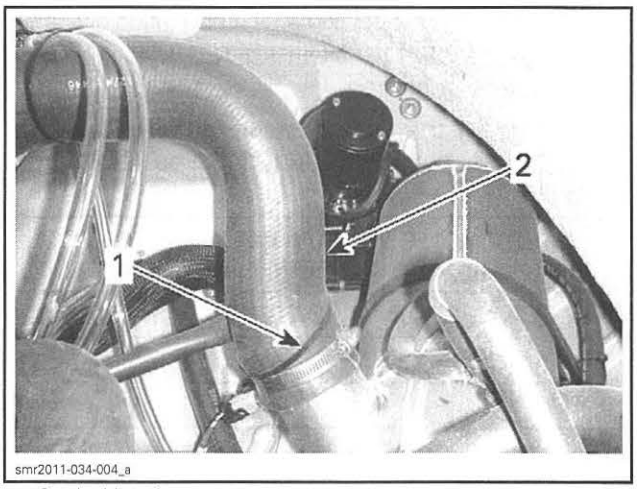

1. Cut locking tie
2. Disconnect hose

RXP X Series

8. Disconnect hose from intercooler and move away.

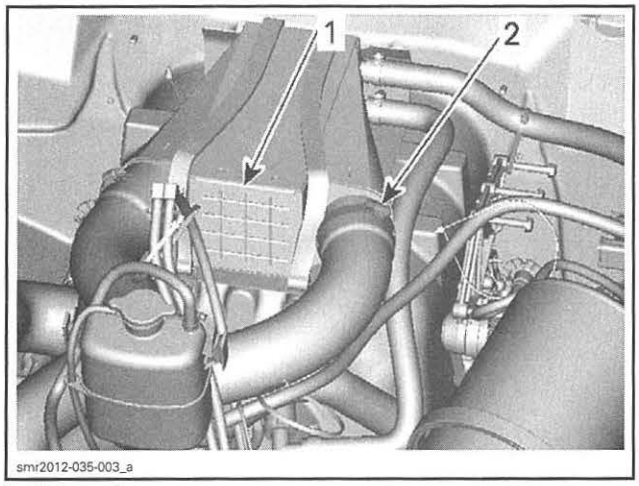

1. Intercooler
2. Disconnect hose here

All Models

9. Pull out iBR actuator.

NOTE: It may be necessary to pry out iBR actuator.

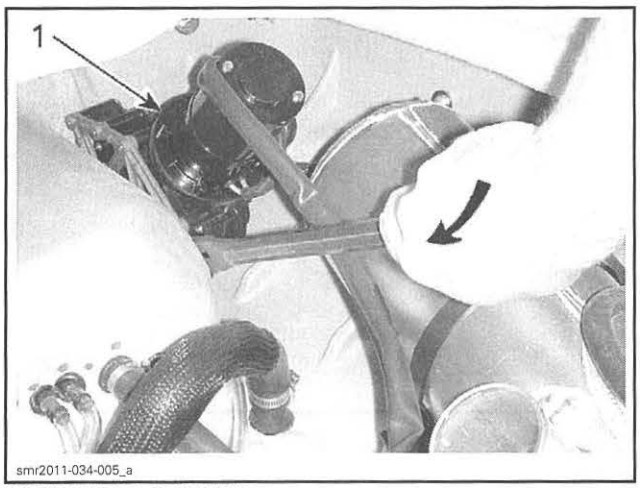

PRYING iBR ACTUATOR
1. iBR actuator

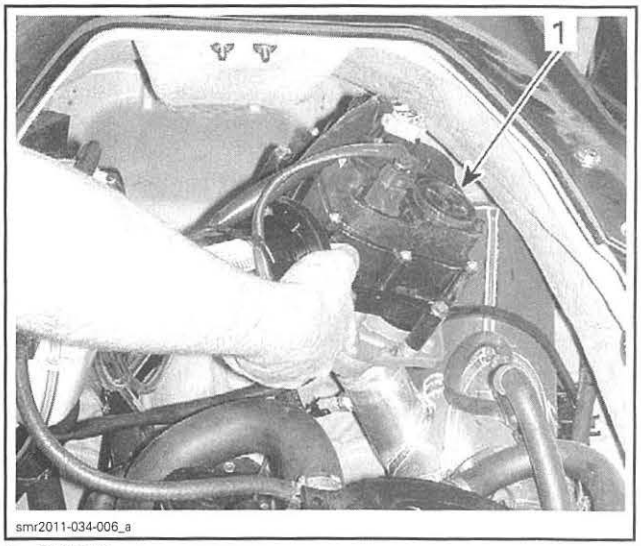

1. Pull out

10. Cut locking tie.
11. Disconnect the indicated connectors.

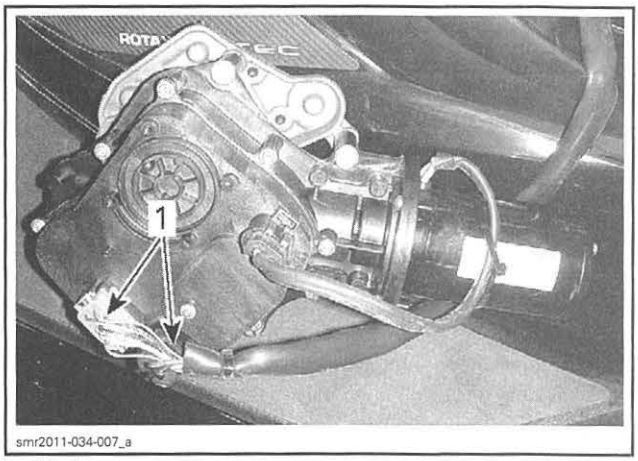

1. Unplug connectors

GTX/RXT Series and Wake Pro Models

1. Disconnect the two aft electrical connectors from the iBR actuator. Refer to *IBR ACTUATOR CONNECTORS ACCESS* in this subsection.

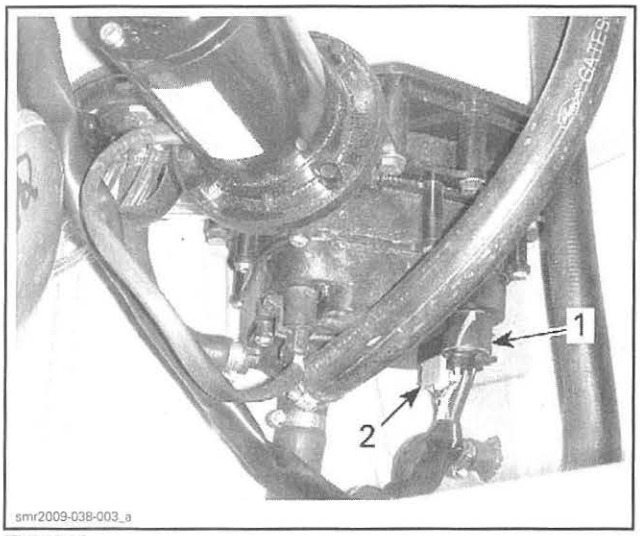

TYPICAL
1. *iBR actuator 3 pin connector*
2. *iBR actuator 12 pin connector*

215/260 Engines

2. Disconnect the water pressure hoses from the iBR actuator.

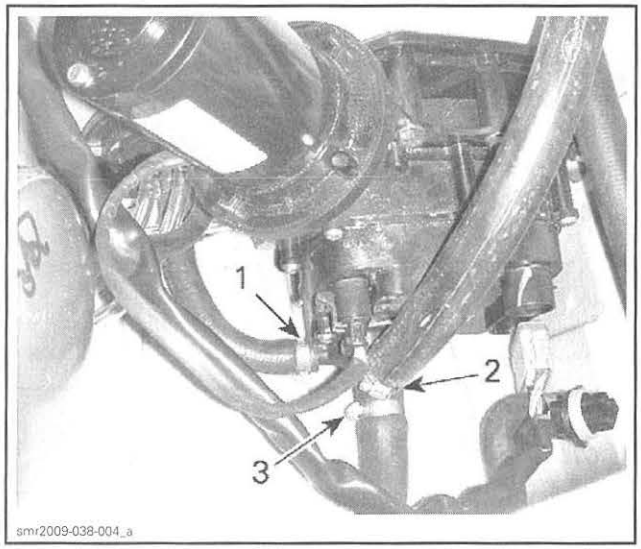

TYPICAL
1. *Pressure hose from jet pump*
2. *Pressure hose to intercooler (260 engines)*
3. *Pressure hose to exhaust manifold*

All Models

3. Pull the iBR actuator with its support plate.
4. Detach support plate from iBR actuator. Refer to *LH SUPPORT PLATE REMOVAL* in this subsection.

iBR Actuator Inspection

Check condition of iBR actuator gasket.

Check condition of ribs on actuator shaft end and in U-arm.

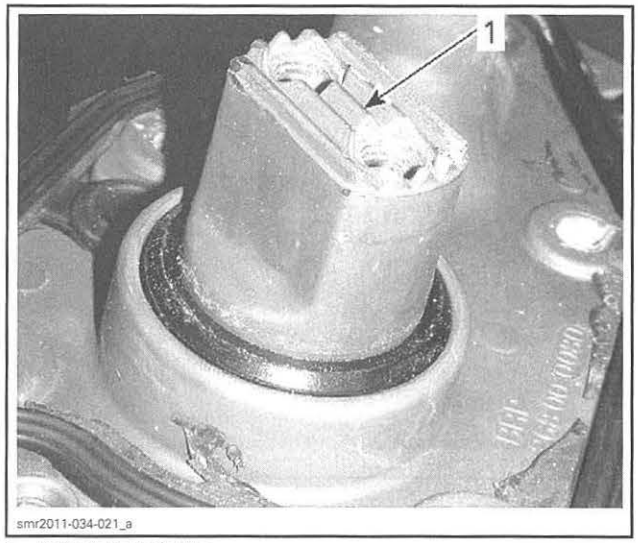

1. *Actuator shaft ribs*

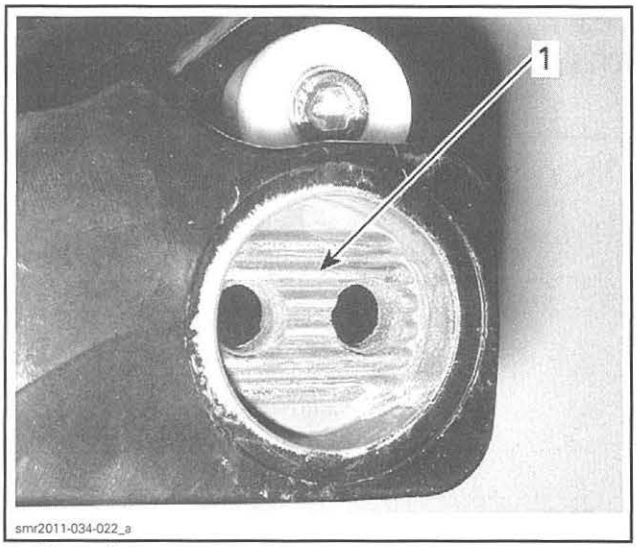

1. *U-arm ribs*

Replace parts as necessary.

iBR Actuator Installation

Installation is the reverse of the removal procedure however, pay attention to the following.

Apply a small amount of DIELECTRIC GREASE (P/N 293 550 004) to the connector pins before plugging the connectors to the iBR actuator.

RXP X Series

IMPORTANT: Connect connectors to iBR module before installing iBR actuator to hull.

All Models

Clean actuator mounting screw threads and apply LOCTITE 243 (BLUE) (P/N 293 800 060) on threads (or install new screws with threadlocker).

215/260 Engines

Torque gear clamps securing water pressure hoses to iBR module to specification.

TIGHTENING TORQUE
2 N•m (18 lbf•**in**)

All Models

1. To avoid iBR position fault code, strictly follow this installation sequence:
   - 1.1 Loosely install all actuator mounting screws.
   - 1.2 Lower reverse gate until it bottoms against stoppers.
   - 1.3 Tighten the two lower screws shown.

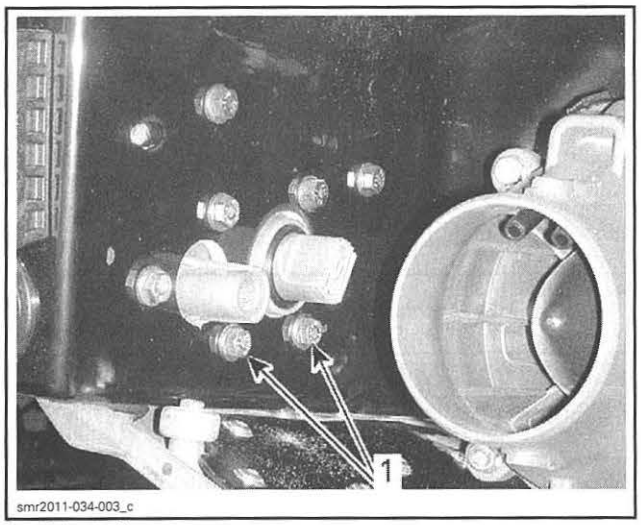

1. Tighten first

   - 1.4 Raise reverse gate.
   - 1.5 Tighten remaining screws.

Finally, torque actuator mounting screws to specification as per following sequence.

TIGHTENING TORQUE
14 N•m (124 lbf•**in**)

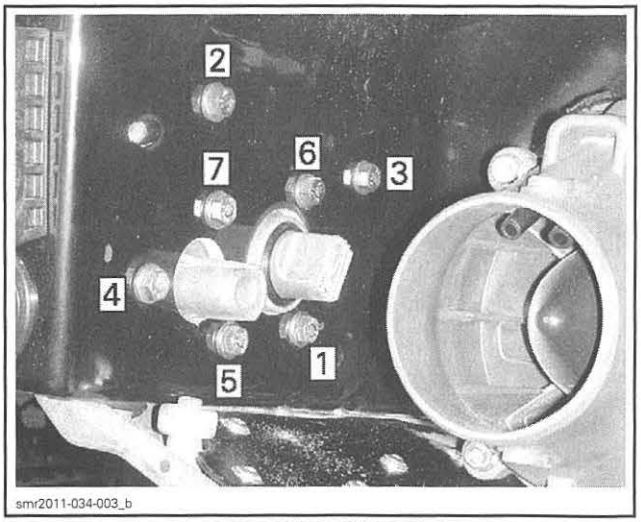

iBR ACTUATOR SCREW TIGHTENING SEQUENCE

Clean iBR shaft screw threads and apply LOCTITE 243 (BLUE) (P/N 293 800 060) on threads (or install new screws with threadlocker).

Secure U-arm to iBR shaft.

Reinstall iBR fuse.

If installing a NEW iBR actuator, refer to *iBR ACTUATOR REPLACEMENT* in this subsection.

Check watercraft in water for water tightness.

iBR Actuator Replacement

To allow proper operation of a NEW iBR actuator, proceed as follows:

1. Connect the latest B.U.D.S. software to the watercraft.
2. In B.U.D.S., click the **Read Data** button. The iBR actuator calibration will be applied automatically.
3. Exit B.U.D.S. and disconnect from watercraft.

iBR GATE

iBR Gate Removal (with VTS Trim Ring and Steering Nozzle)

Move the iBR gate to the forward position (full up) using the *iBR OVERRIDE* function. Refer to *SYSTEM DESCRIPTION (iBR)* in this subsection.

NOTICE **Do not try to manually force the iBR gate when all components are installed.**

⚠ CAUTION **Remove iBR fuse (F5) before working in the iBR gate area. Refer to *POWER DISTRIBUTION*.**

1. Disconnect the steering cable from the steering nozzle arm.

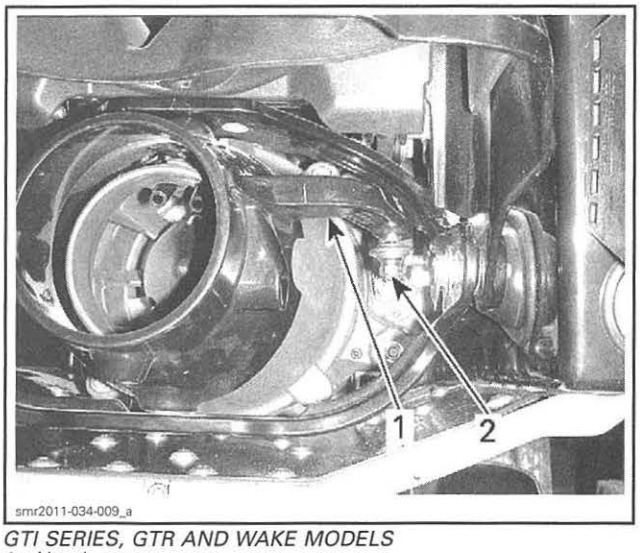

GTI SERIES, GTR AND WAKE MODELS
1. *Nozzle arm*
2. *Remove screw*

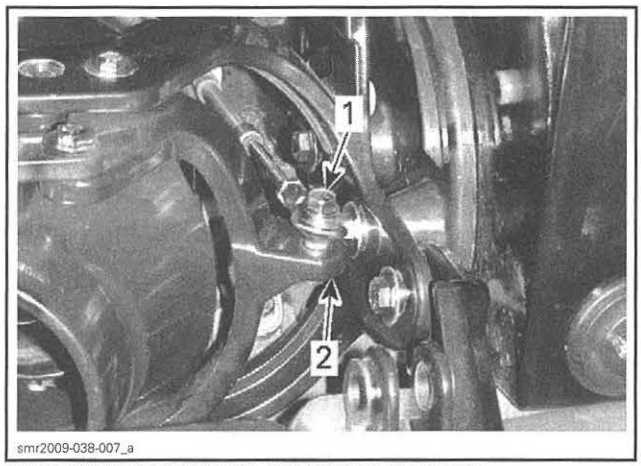

GTX/ RXT/RXP-X SERIES, WAKE PRO MODELS
1. *Remove screw*
2. *Nozzle lever*

2. Remove screws retaining U-arm to iBR actuator shaft.

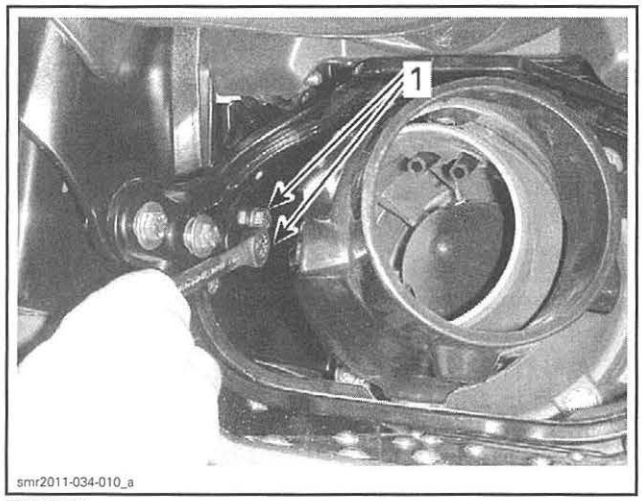

TYPICAL
1. *Remove screws*

⚠ CAUTION From now on, retain iBR gate to prevent it to fall. Pay attention not to catch your fingers.

3. Raise iBR gate to its upper position. Hold in position.
4. Remove screw and bushing from iBR gate LH pivot point.

NOTE: Pull out bushing along with the screw.

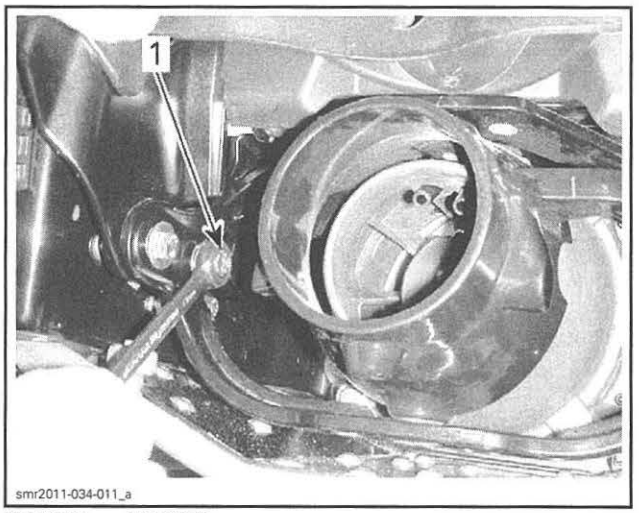

TYPICAL — LH SIDE
1. *Remove screw and bushing*

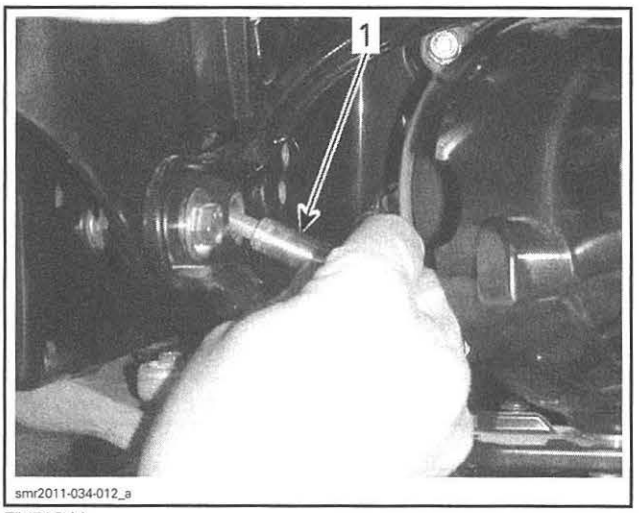

TYPICAL
1. *Bushing*

5. Remove screw from iBR gate RH pivot point.

NOTE: Pull out bushing along with the screw.

6. Remove screw from U-arm pivot point

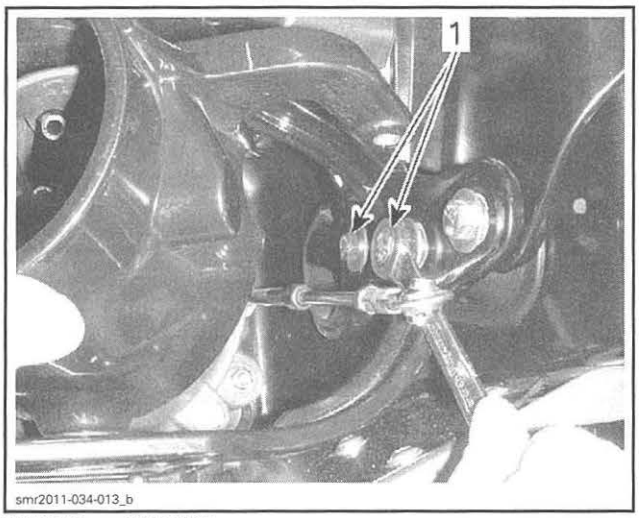

TYPICAL — RH SIDE
1. Remove screws

Pull out iBR gate ass'y with U-arm.



TYPICAL

iBR Gate and VTS Trim Ring Disassembly

VTS Trim Ring Removal

Remove the two hexagonal screws securing the iBR gate to the VTS trim ring.

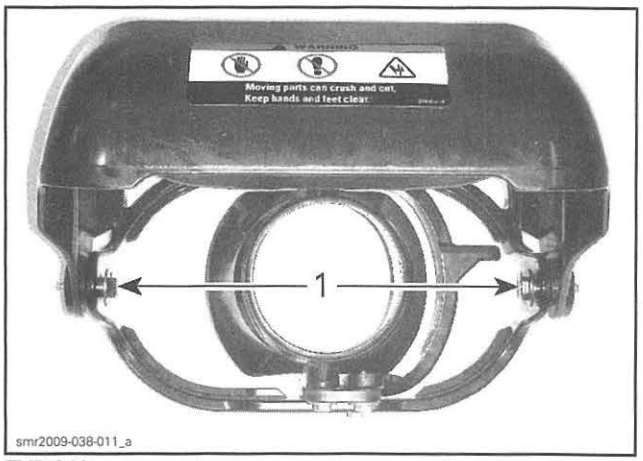

TYPICAL
1. iBR gate retaining hexagonal screws to remove

Trim Ring Inspection

1. Inspect trim ring and metal spacers for cracks, oblong holes, evidence of wear and deformation.
2. Inspect plastic bushings and friction sleeves for cracks, deformation and signs of wear.

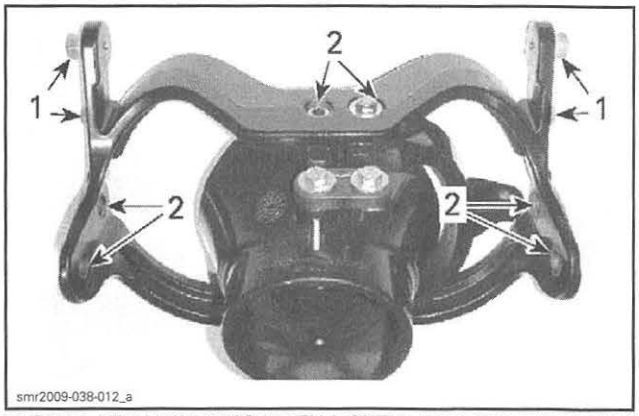

TYPICAL VTS TRIM RING (WITH NOZZLE AND STEERING ARM)
1. Friction sleeves (2 each side)
2. Plastic bushings (x8)

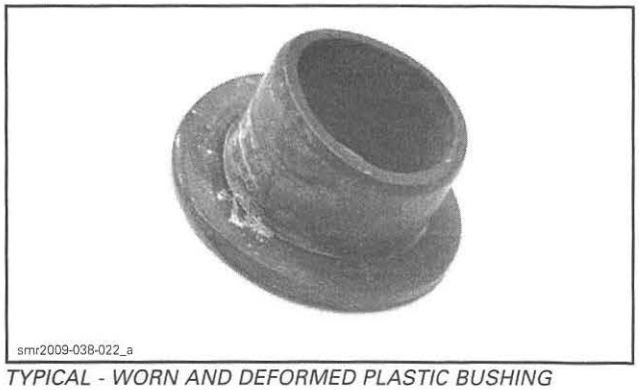

TYPICAL - WORN AND DEFORMED PLASTIC BUSHING

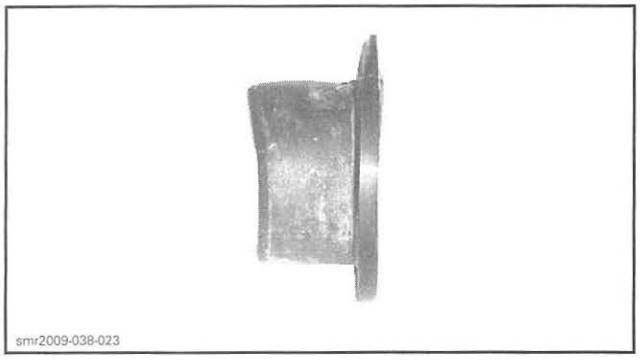

NOTE: Friction sleeves should be replaced as specified in maintenance chart or if they show signs of wear (flat surfaces). Plastic bushings are press fit and should be replaced if they show signs of wear, deformation, or if the iBR gate backlash is beyond service limit.

3. Inspect gate stoppers for signs of wear.

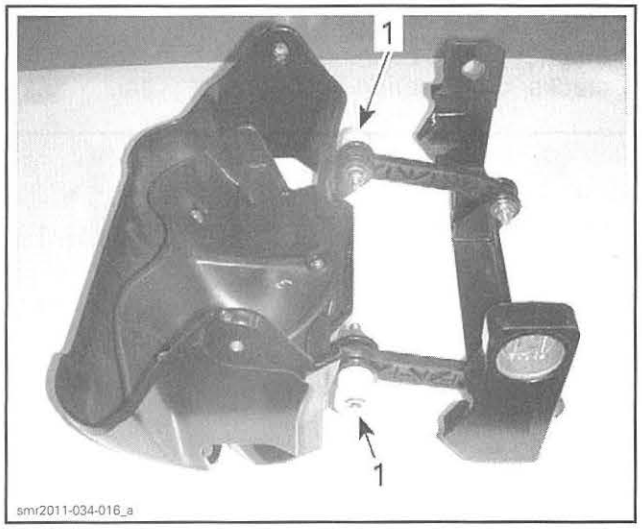

TYPICAL
1. Stoppers

4. Replace parts as required.

Steering Nozzle Removal

GTI Series, GTR and Wake Models

1. Remove screws securing nozzle to VTS ring.

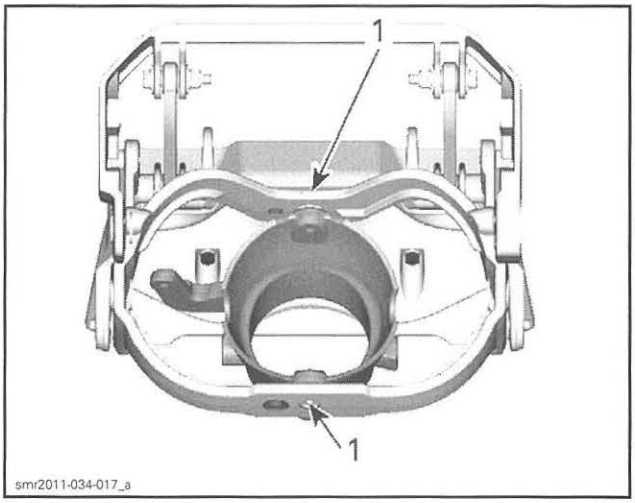

1. Remove screws

GTX/RXT/RXP-X Series and Wake Pro Models

1. Remove the 2 hexagonal screws securing the steering arms (links) to the steering nozzle (top and bottom).

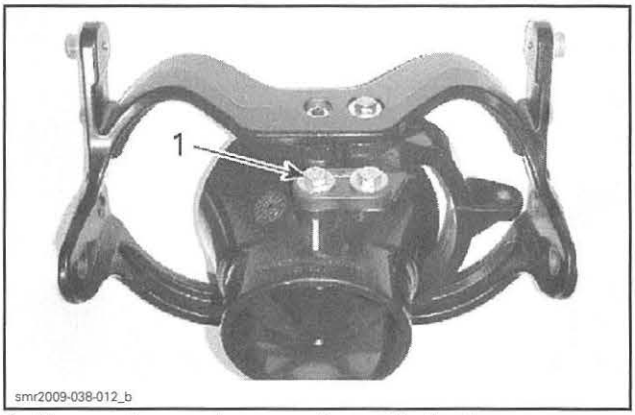

1. Hexagonal screws to remove (top and bottom)

2. Remove the 2 socket head screws securing the nozzle to the VTS trim ring (1 top and 1 bottom).

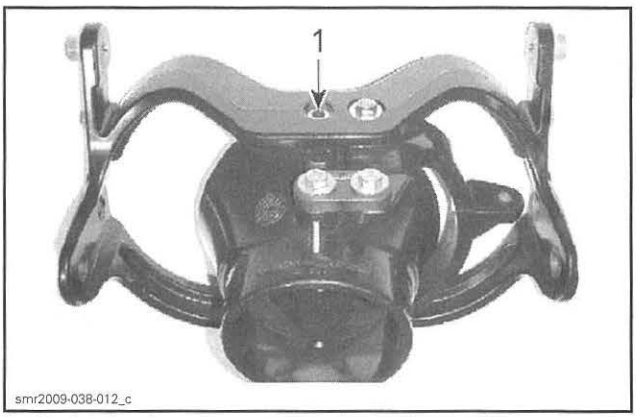

1. Socket head screws to remove (top and bottom)

Steering Nozzle Lever Removal

GTX/RXT/RXP-X Series and Wake Pro Models

1. Remove the hexagonal screws securing the steering arms (links) to the steering nozzle lever, top and bottom.

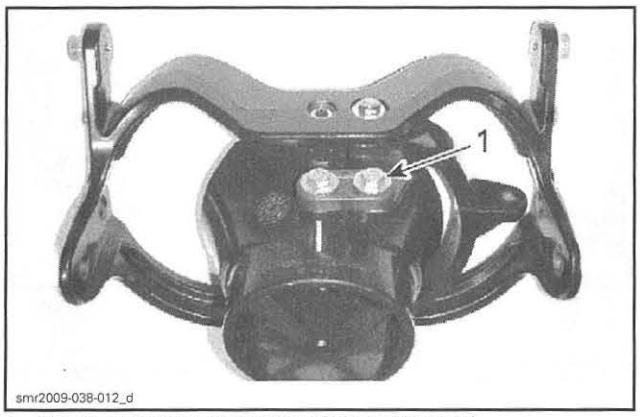

1. Hexagonal screws to remove (top and bottom)

2. Remove the hexagonal screws securing the steering nozzle lever to the VTS trim ring, top and bottom.

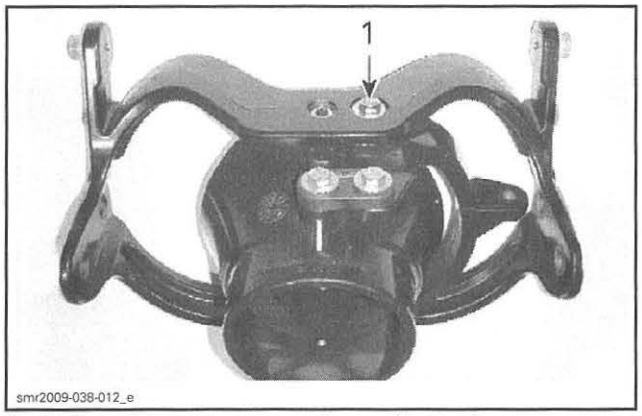

1. Hexagonal screws to remove (top and bottom)

Steering Nozzle Inspection

1. Inspect steering nozzle for cracks, wear, deformation, and other damages.

Inspect bushings for wear or other damage.

2. Replace parts as required.

Steering Nozzle Lever Inspection

GTX/RXT/RXP-X Series and Wake Pro Models

1. Inspect steering nozzle lever, steering arms, and spacers for cracks, elongated holes, evidence of wear, deformation and other damages.
2. Replace as required.

iBR Gate Inspection

1. Inspect the iBR gate and its plastic liner for cracks, out of round holes, evidence of wear, deformation and other damages.
2. Inspect plastic bushings (x4) for cracks, wear, and deformation.
3. Replace as required.

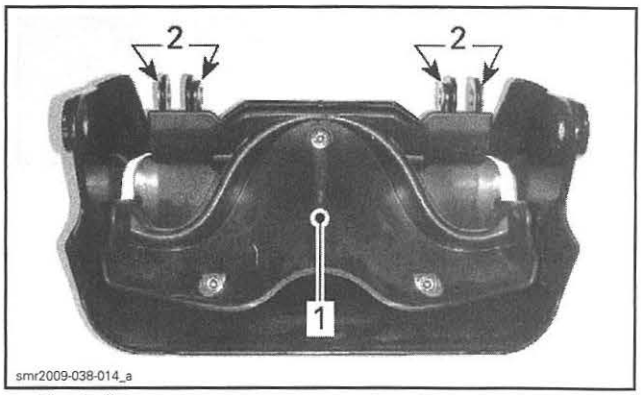

1. Plastic liner
2. Plastic bushings

iBR Gate and VTS Ring Reassembly

Install all parts removed in the reverse order of removal, however pay attention to the following:

- Install new friction sleeves (as required).
- Install new plastic bushings (as required).
- Install new hexagonal screws with threadlocker.
- Torque all retaining screws as per exploded view.

When installing the iBR gate onto the VTS ring, position the VTS ring so that the small end of the steering nozzle is facing you with the steering lever towards the RH side.

Position the iBR gate over the ring so that the warning label is facing you (right side up) and install the mounting hardware as seen in the exploded view. The attachment points for the linkage arms will be facing away from you (not visible in following illustration of iBR gate and VTS ring assembly).

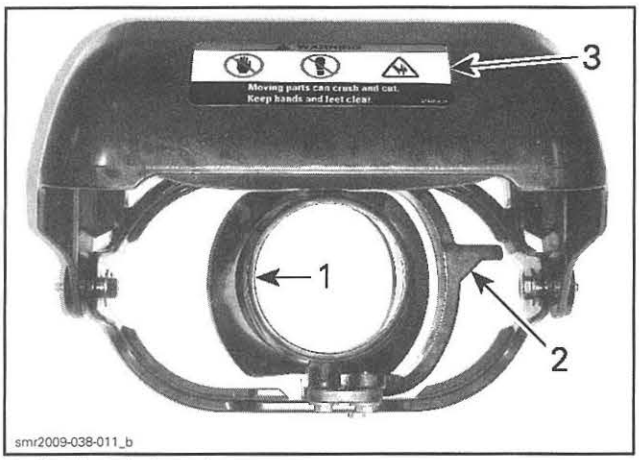

smr2009-038-011_b

1. *Small end of nozzle*
2. *Steering lever*
3. *Warning label*

iBR Gate Installation (with VTS Trim Ring and Steering Nozzle)

Installation is the reverse of the removal procedure however, pay attention to the following.

Ensure all flanged bushings are in place.

Position iBR gate down and components as shown to install into position.

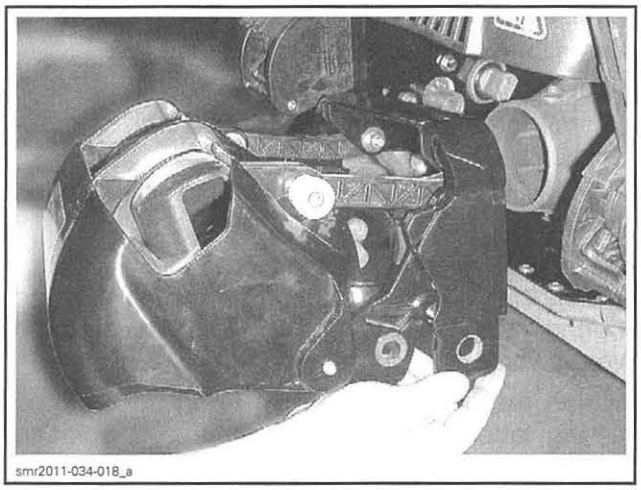
smr2011-034-018_a

Insert iBR gate ass'y between mounting plates.

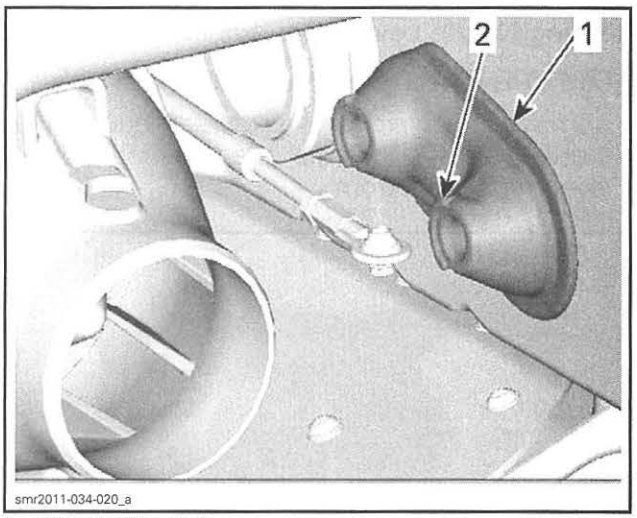

smr2011-034-020_a

1. *RH mounting plate*
2. *Rib here*

NOTE: Ensure RH mounting plate is in place before inserting iBR gate ass'y. Also position its ribs as illustrated.

Raise iBR gate to its upper position. Hold in position.

Use new screws with threadlocker for installation.

Loosely install M8 x 70 mm screws on RH side.

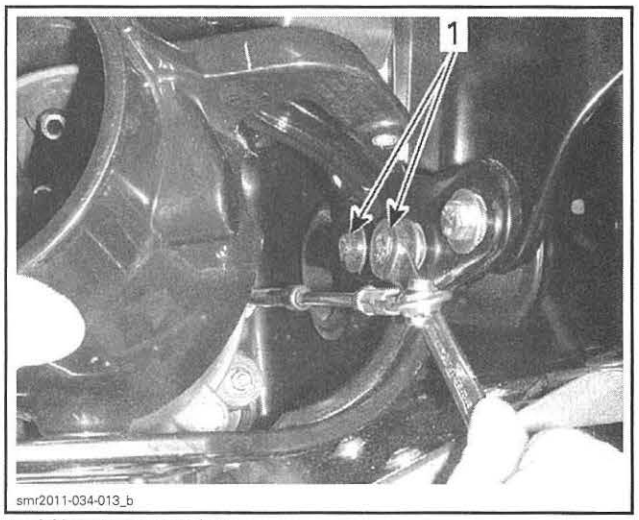

smr2011-034-013_b

1. *M8 x 70 screws here*

Install screw on LH side of VTS ring pivot point then iBR shaft screws.

Torque all retaining screws as specified in exploded view.

NOTICE Over torquing will damage inserts.

NOTICE Overtorquing will damage inserts.

U-ARM

U-Arm Removal

Remove U-arm as an assembly with iBR gate. Refer to *iBR GATE* in this subsection.

U-Arm Inspection

1. Inspect U-arm and linkage arms (x2) for cracks, wear, and signs of twisting and bending.
2. Ensure the VTS cams on the U-arm are not worn, cracked or broken.
3. Inspect the plastic bushings (x5) for cracks, wear and deformation.
4. Replace parts as required.

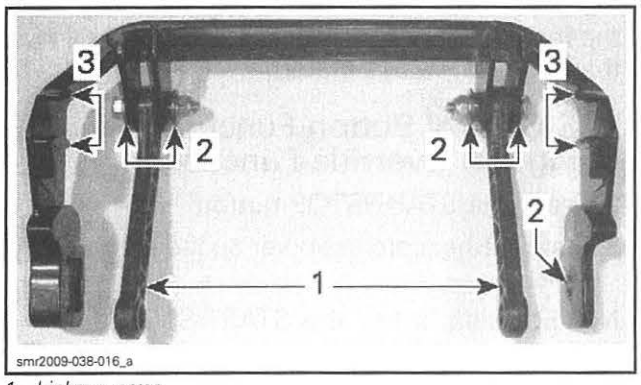

1. *Linkage arms*
2. *Plastic bushings (x5)*
3. *VTS cams*

U-Arm Installation

Installation is the reverse of the removal procedure however, pay attention to the following:

- Install new plastic bushings (as required).
- Install all new hexagonal screws with threadlocker.
- Torque all retaining screws as per exploded view.

iBR GATE SUPPORT PLATES

iBR Gate Support Plate Removal

RH Support Plate Removal

1. Remove iBR gate ass'y. Refer to procedure in this subsection.
2. Remove support plate.

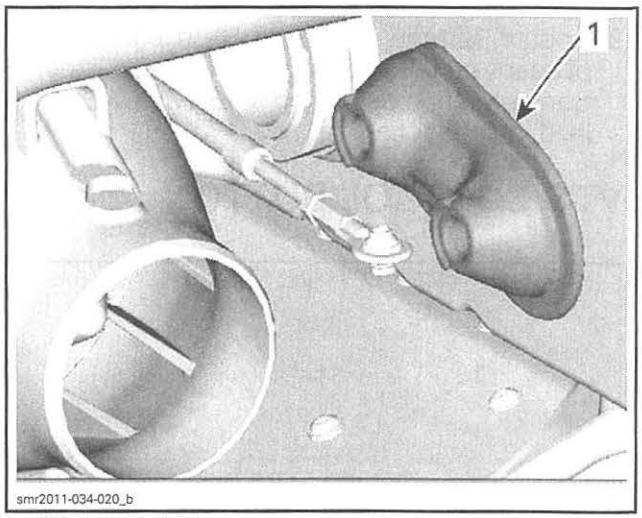

1. *RH support plate*

LH Support Plate Removal

1. Remove iBR actuator. Refer to procedure in this subsection.
2. Remove support plate mounting screws.

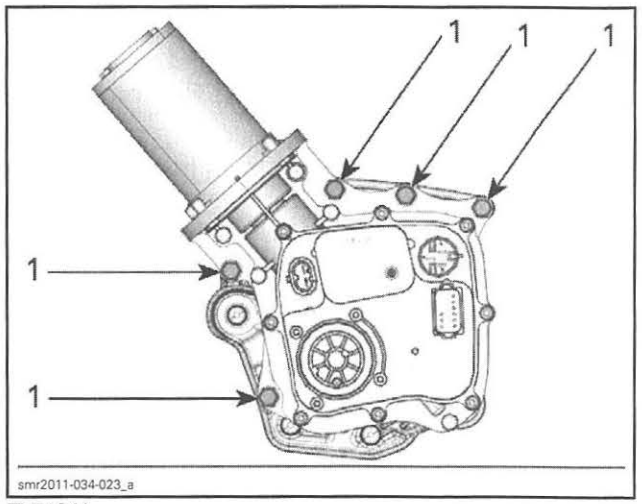

TYPICAL
1. *Mounting screws*

3. Pull out support plate.

iBR Support Plate Installation

RH Support Plate Installation

Installation is the reverse of the removal procedure.

LH Support Plate Installation

Installation is the reverse of the removal procedure however, pay attention to the following:

1. Install screws to secure support plate to iBR actuator and torque as per exploded view.

2. Ensure formed seal is in good condition and properly install on support plate. Follow installation sequence described in *iBR INSTALLATION* in this subsection.

VTS CONTROL BUTTON

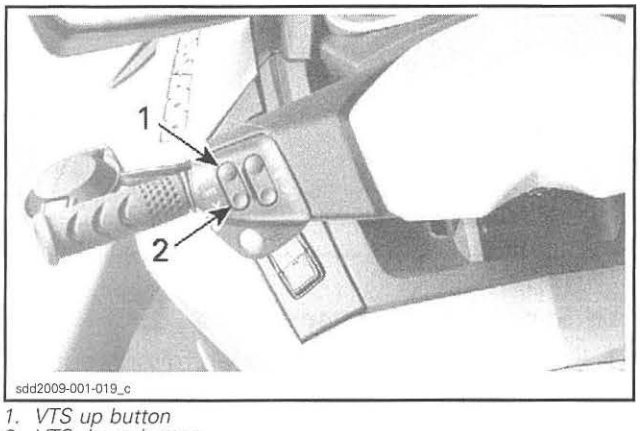

1. VTS up button
2. VTS down button

VTS Button Overview

The VTS button contain a series of 4 diodes for the UP and DOWN arrow switches. Refer to *WIRING DIAGRAM*.

The center wire to the switches (pin "C"), is common for iS button and VTS button (somewhat like a ground wire). The other two wires (pins "A" and "B"), act as signal wires to the gauge for each set of switches. They actually each form one branch of an electronic circuit within the gauge.

Each diode (in circuit) drops a nominal 0.6 Vdc when conducting electricity. If the circuit current passes through all four diodes (say VTS switch open), a drop of 2.4 Vdc would be measured across the 4 diodes (pin "A" to pin "C"). This drop of 2.4 Vdc measured at pin "A" tells the gauge the VTS switch is open.

If the VTS UP button is pressed, 2 diodes are bypassed by the closed switch. The remaining two diodes in the circuit drop 1.2 Vdc (at pin "A").

If the VTS DOWN button is pressed, 1 diode is bypassed by the closed switch. The remaining three diodes in the circuit drop 1.8 Vdc (at pin "A").

The gauge senses these voltages through pin 13 of its connector, and interprets them as signals that tell it which switch is activated (VTS UP or VTS DOWN).

Since the command signal generated by the closure of a VTS switch concerns the VTS module, a circuit within the gauge will translate it to CAN protocol and transmit it through the CAN bus. The VTS module will react to the command, carry out the function, and transmit the result back through the CAN bus.

The gauge will use the signals from the switches and the transmitted information from the other modules, convert them to an indication, and cancel the command signal it sent out once the function has been carried out.

NOTE: The voltages stated above vary slightly depending on the actual voltage applied to the circuit and the current flow through the diodes. When using a Fluke 115 multimeter for testing in diode test mode, the voltage and current applied by the multimeter are lower than in circuit. The quality of probe contact, the actual probes and leads, and the precision of the meter calibration will all affect the results, which will most likely be slightly lower than nominal values stated.

VTS Control Button Functional Test Using iBR Override Function

1. Press the START/STOP button.
2. Install tether cord to power up the electrical system.

NOTE: Briefly press the START/STOP button to reactivate the electrical system when required.

3. Activate the iBR override function, refer to *SYSTEM DESCRIPTION (iBR)* in this subsection.
4. Press and hold the VTS DOWN arrow button. The iBR gate and steering nozzle will move downwards together until they reach the full VTS down position. The iBR gate will then continue moving to the full reverse/braking position alone.
5. Depress and hold the VTS UP arrow button and ensure the iBR gate moves up to the forward position.

NOTE: If the VTS button is released before full travel of the iBR gate, movement of the iBR gate will cease.

If the iBR does not respond to VTS button commands (UP or DOWN), carry out the following *VTS SWITCH TEST USING B.U.D.S.*

VTS Control Button Test Using B.U.D.S.

1. Connect watercraft to the latest B.U.D.S. software, refer to *COMMUNICATION TOOLS AND B.U.D.S.*
2. Click the **Read Data** button.
3. Check for an applicable fault code on the *FAULTS* page.

4. Click the **Monitoring** tab.
5. In the lower LH corner, click the **Cluster** tab.
6. On the LH handlebar, press the VTS UP and DOWN button alternately and look for the VTS UP and VTS Down indicator lights to come on in the **Cluster Lamp Active** area in B.U.D.S.

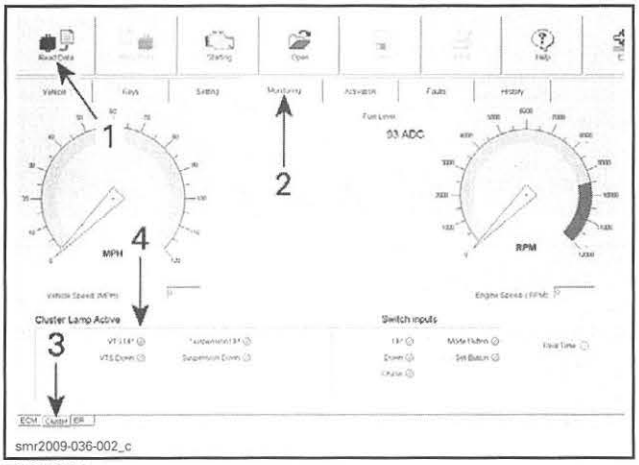

TYPICAL
1. *Read Data button*
2. *Monitoring tab*
3. *Cluster tab*
4. *Cluster Lamp Active area*

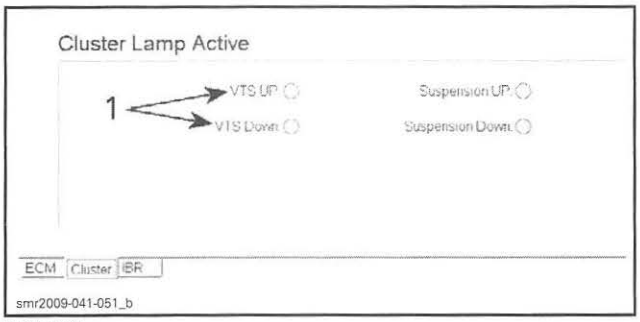

TYPICAL
1. *VTS UP and VTS Down indicator lights*

If each of the gauge button indicator lights come on when the applicable switch is pressed, the VTS control button switches and wiring are good. The problem may be related to the information center or iBR module.

If one or all of the indicator lights do not come on, refer to *VTS CONTROL BUTTON TEST USING A MULTIMETER*.

VTS Control Button Test Using a Multimeter

1. Remove the gauge support cover, refer to *GAUGE* subsection.
2. Disconnect the gauge connector.

NOTICE **Pull connector lock out. Do not twist the screwdriver.**

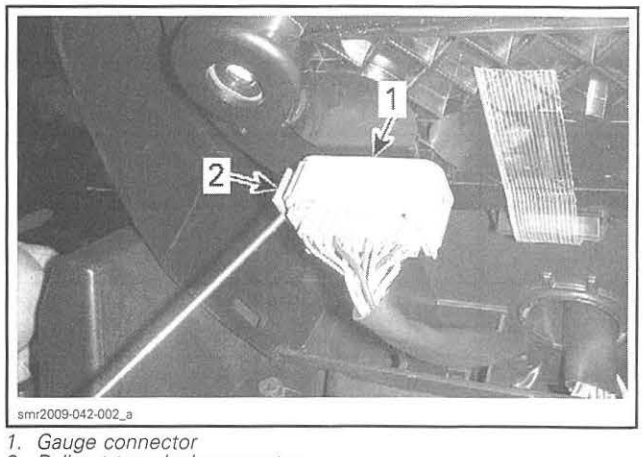

1. *Gauge connector*
2. *Pull out to unlock connector*

3. Use a FLUKE 115 MULTIMETER (P/N 529 035 868) set to the diode test function. Test the VTS button switches as per following tables.

NOTE: It is important to set the multimeter to the diode check function when testing the VTS control switches.

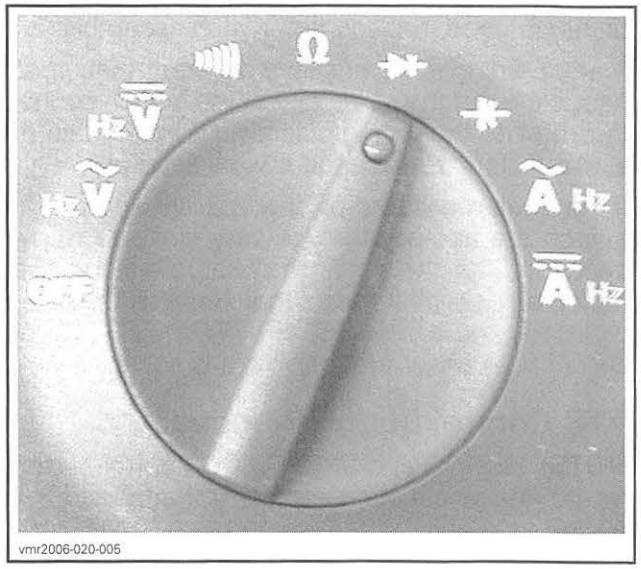

NOTE: Pay attention to multimeter lead position for diode biasing during test. Remember that each diode should drop approximately 0.6 Vdc when positively biassed, and read as an OL (open circuit) when negatively biassed (leads reversed).

VTS CONTROL TEST			
SWITCH POSITION	MULTIMETER LEAD	GAUGE CONNECTOR	VOLTAGE
Switch released	RED lead BLACK lead	Pin 13 Pin 15	Approx. 2 Vdc
	BLACK lead RED lead	Pin 13 Pin 15	OL
UP depressed	RED lead BLACK lead	Pin 13 Pin 15	Approx. 1.1 Vdc
	BLACK lead RED lead	Pin 13 Pin 15	OL
DOWN depressed	RED lead BLACK lead	Pin 13 Pin 15	Approx. 1.6 Vdc
	BLACK lead RED lead	Pin 13 Pin 15	OL

When measuring between pins 13 and 15, if an OL is obtained with both positive and negative diode biassing, test the continuity of each wire between the gauge and switch assembly. If continuity is good, replace the switch assembly.

If any reading is significantly different than specified, carry out the same test at the switch connector, refer to the wiring diagram. If you obtain the same results, replace the switch assembly.

If voltages measured on the VTS UP and DOWN switch are as specified (or very close to it), the switches and the wiring harness are good. The fault may be within the gauge. Replace the gauge and carry out a new *VTS BUTTON TEST USING B.U.D.S.* to ensure the problem is solved.

VTS Control Button Removal

NOTE: The VTS and SPORT/ECO control buttons may come as a switch assembly that must be replaced as a unit.

Models with a VTS Switch

1. Remove steering cover, refer to *STEERING AND O.T.A.S.*

Models Without a VTS Switch

2. Remove the upper housing and housing cover from the LH handlebar housing.

All Models

3. Remove connector from switch assembly.

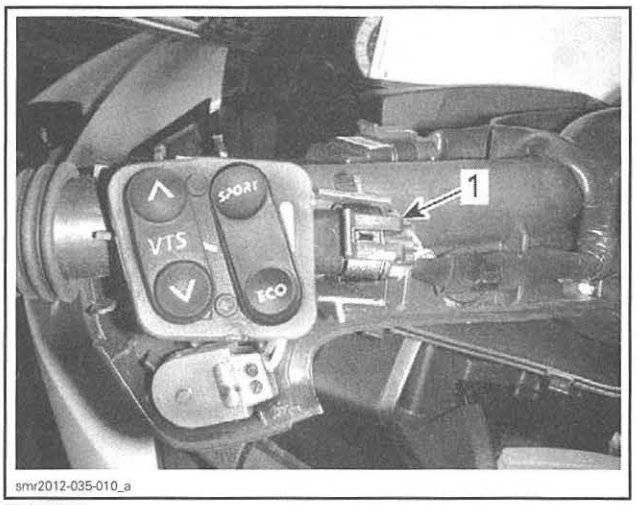

TYPICAL
1. SPORT/ECO switch connector

4. Remove switch assembly from support by lifting it off the support.

VTS Control Button Installation

1. Apply a small amount of DIELECTRIC GREASE (P/N 293 550 004) on switch contact pins.
2. Install connector on new switch assembly.
3. Ensure wiring from START switch is properly inserted in slot provided before installing VTS and SPORT/ECO control switch assembly.

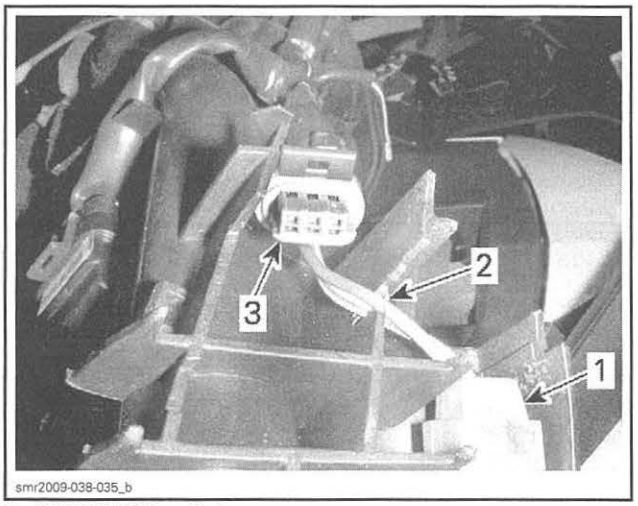

1. START/STOP switch
2. Wiring routed in slot provided in support
3. SPORT/ECO switch connector

4. Insert switch assembly in switch support.
5. Install remaining removed parts, refer to *STEERING AND O.T.A.S.*
6. Carry out an operational test of the VTS and iS systems to ensure proper operation of new switch assembly.

JET PUMP

SERVICE TOOLS

Description	Part Number	Page
IMPELLER REMOVER/INSTALLER	529 035 820	498–499, 501, 503, 506
IMPELLER REMOVER/INSTALLER	529 035 956	498–499, 501, 503, 506
IMPELLER SHAFT BEARING TOOL	529 036 168	502, 504
IMPELLER SHAFT PUSHER	529 035 955	502, 504
PRESSURE CAP	529 036 172	492
PUMP PLATE	529 036 224	493
SEAL/BEARING PUSHER	529 035 819	505
VACUUM/PRESSURE PUMP	529 021 800	492

SERVICE PRODUCTS

Description	Part Number	Page
JET PUMP BEARING GREASE	293 550 032	497, 504, 506
LOCTITE 243 (BLUE)	293 800 060	495, 507
LOCTITE 577 (THREAD SEALANT)	293 800 050	500
LOCTITE 767 (ANTISEIZE LUBRICANT)	293 800 070	499
PULLEY FLANGE CLEANER	413 711 809	494
TRIPLE-GUARD GREASE	296 000 329	494–495, 500
XPS LUBE	293 600 016	495, 499

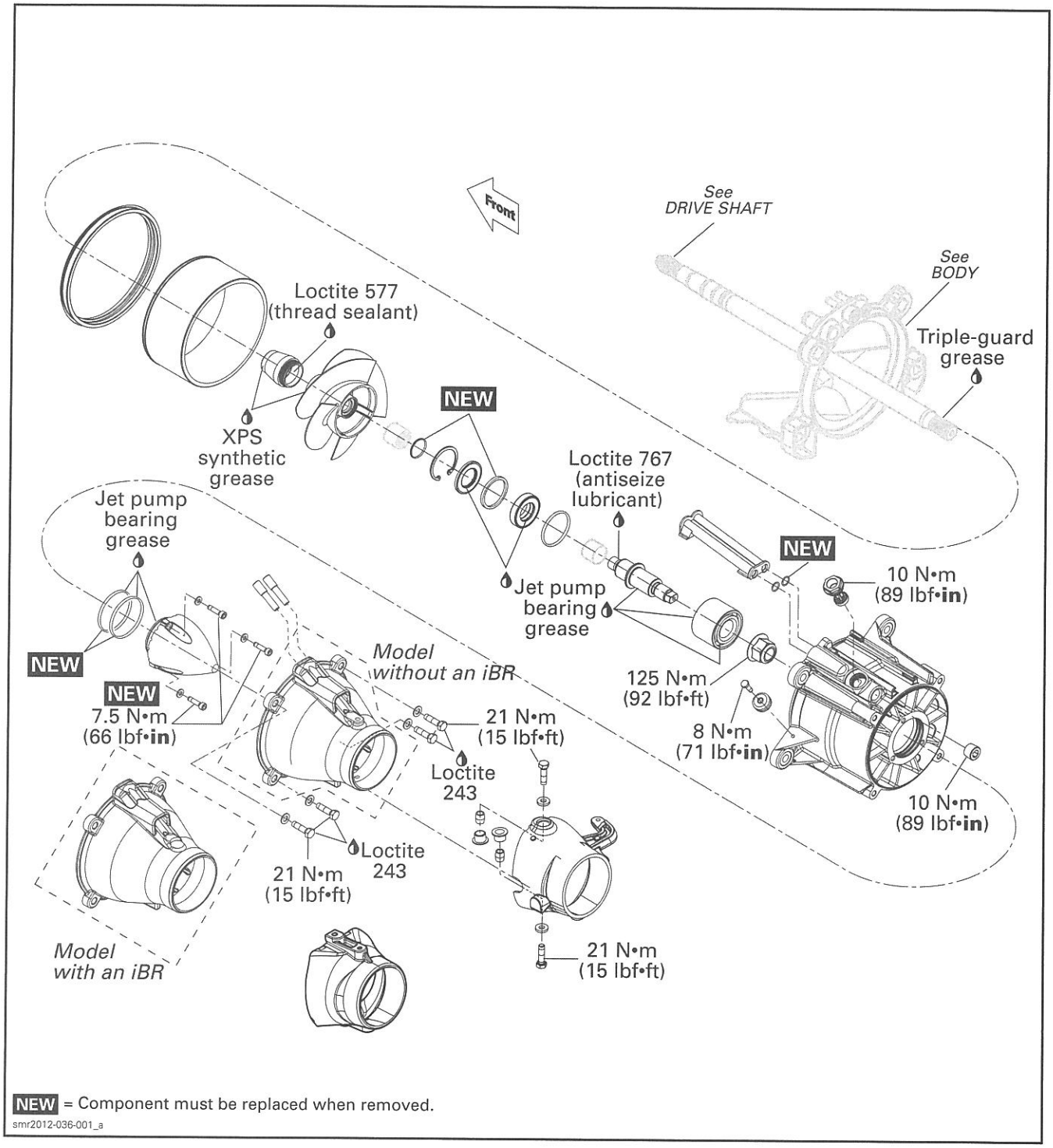

NEW = Component must be replaced when removed.

smr2012-036-001_a

GENERAL

JET PUMP MAIN COMPONENTS

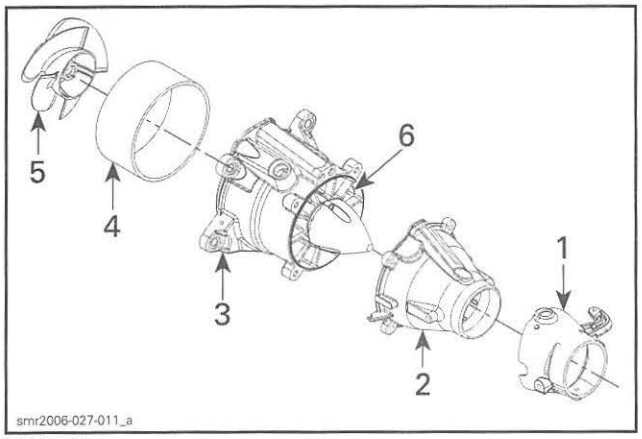

TYPICAL
1. *Nozzle*
2. *Venturi*
3. *Jet pump housing*
4. *Wear ring*
5. *Impeller*
6. *Stator*

INSPECTION

IMPELLER CONDITION

Condition of impeller, impeller boot and wear ring can be quickly checked from underneath the watercraft. With the vehicle on the trailer, use a flashlight to visually inspect them through the inlet grate.

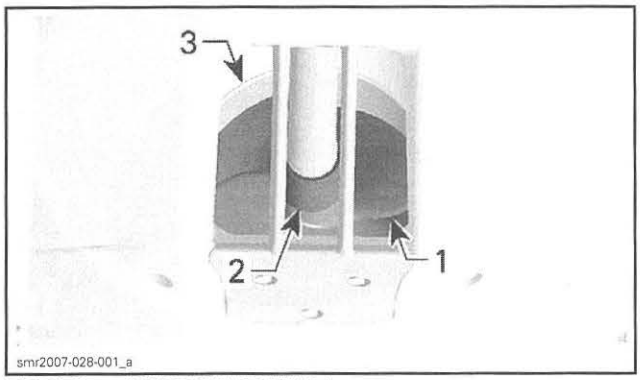

TYPICAL — UNDERNEATH HULL
1. *Impeller*
2. *Impeller boot*
3. *Wear ring*

IMPELLER/WEAR RING CLEARANCE

This clearance is critical for jet pump performance.

To check clearance, remove jet pump.

Using a feeler gauge, measure clearance between impeller blade tip and wear ring. Measure each blade at its center.

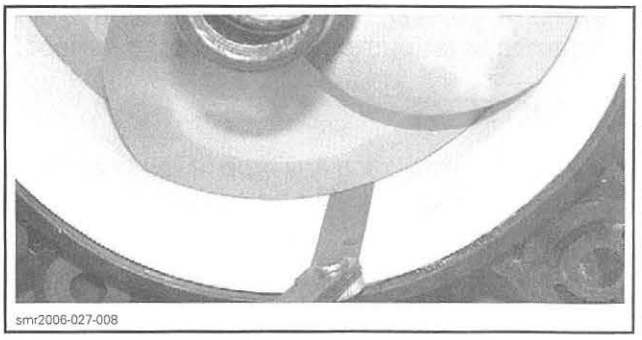

MODEL	MAXIMUM WEAR CLEARANCE
All models	0.35 mm (.014 in)

IMPELLER SHAFT RADIAL PLAY

Radial play is critical for jet pump life span.

To check radial play, remove jet pump.

Make sure impeller shaft turns freely and smoothly.

1. Retain housing in a soft jaw vise making sure not to damage housing lug.
2. Set a dial gauge and position its tip onto metal end, close to the end of the impeller hub.
3. Move shaft end up and down. Difference between highest and lowest dial gauge reading is radial play.

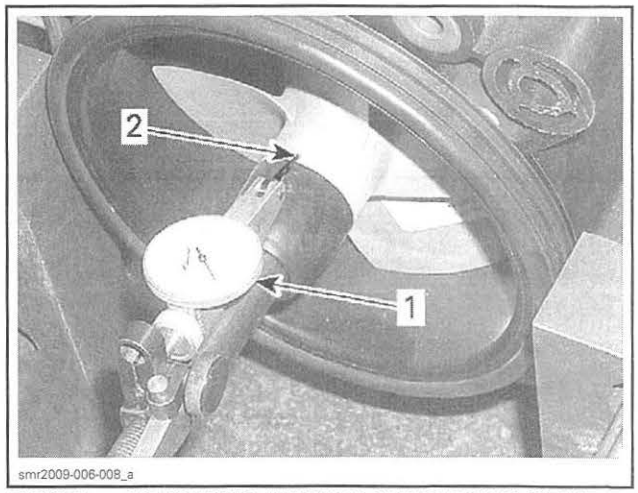

TYPICAL — MEASURING IMPELLER SHAFT RADIAL PLAY
1. *Dial gauge*
2. *Measure close to impeller hub end*

RADIAL PLAY
0 mm (0 in)

Excessive play can come either from worn bearing or damaged jet pump housing bearing surface.

LEAK TEST

Whenever performing any type of repair on the jet pump, a leak test should be carry out.

Proceed as follows:

1. Remove impeller cover. Refer to *IMPELLER COVER* in this subsection.
2. Install the PRESSURE CAP (P/N 529 036 172) on pump housing.

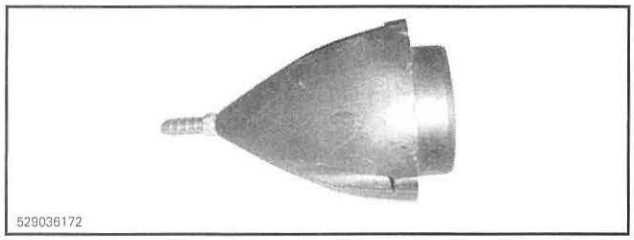

3. Connect the VACUUM/PRESSURE PUMP (P/N 529 021 800) to the pressure cap fitting.



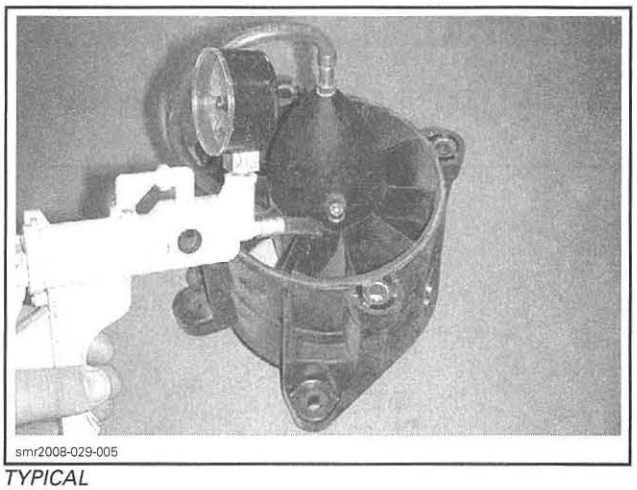

TYPICAL

4. Pressurize pump.

LEAK TEST PRESSURE
Maximum 70 kPa (10 PSI)

5. Pump must maintain this pressure for at least 5 minutes.
   - If there is a pressure drop, spray soapy water around cover. If there are no bubbles, impeller shaft, impeller shaft seal must be replaced. Jet pump unit has to be disassembled.

NOTE: If there is 2 or 3 bubbles coming out from the seal on the impeller side is acceptable. Leaks from other areas must be repaired.

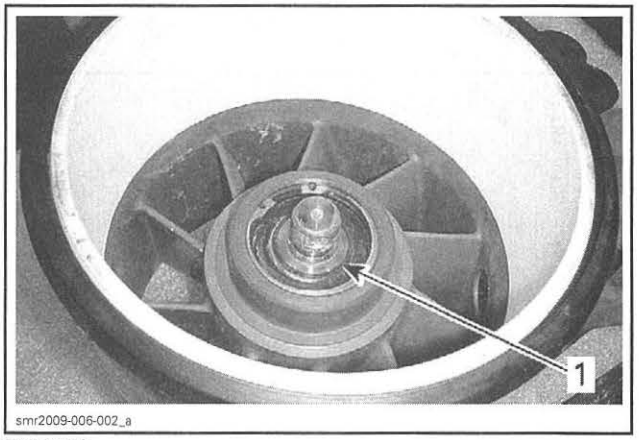

TYPICAL
1. Small leak here is acceptable

NOTICE **Repair any leak. Failure to correct a leak will lead to premature wear of pump components.**

6. Disconnect pump and remove pressure cap.
7. Reinstall impeller cover. Refer to *IMPELLER COVER* in this subsection.

PROCEDURES

NOTE: Whenever removing a part, visually check for damage such as: corrosion, cracks, split, break, porosity, cavitation, deformation, distortion, heating discoloration, wear pattern, defective plating, missing or broken balls in ball bearing, water damage diagnosed by black-colored spots on metal parts, etc. Replace any damaged parts. As a quick check, manually feel clearance and end play, where applicable, to detect excessive wear.

SACRIFICIAL ANODE

Sacrificial Anode Inspection

Check for wear. If worn more than half, replace anode.

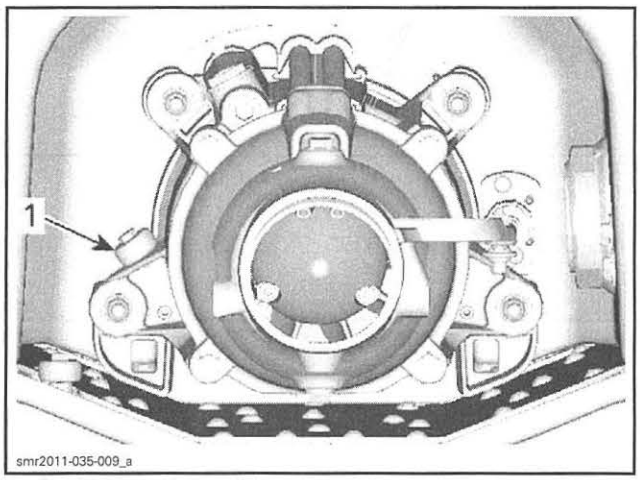

1. Sacrificial anode location

Sacrificial Anode Removal

Unscrew sacrificial anode hexagonal screw and remove anode.

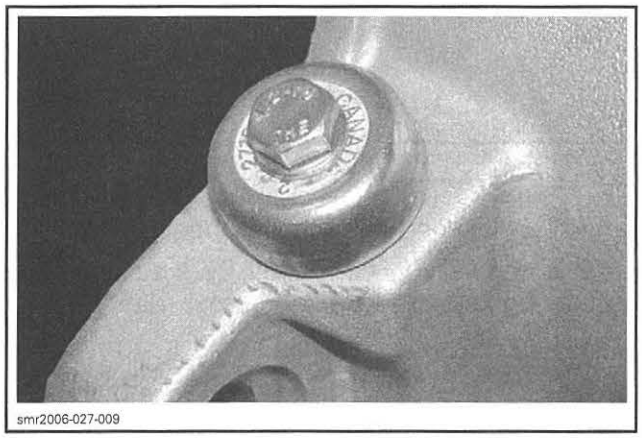

Sacrificial Anode Installation

Installation is the reverse of the removal procedure.

Torque anode retaining screw as specified in exploded view.

JET PUMP HOUSING

NOTE: The jet pump housing can be removed as an assembly with the venturi. This is the preferred procedure when either the drive shaft or engine removal is required.

Jet Pump Housing Removal

Do the following as applicable.

1. Remove the iBR gate and VTS trim ring. Refer to *iBR AND VTS* subsection.
2. Detach steering cable from nozzle.
3. Remove the nuts that retain the jet pump to the pump support.

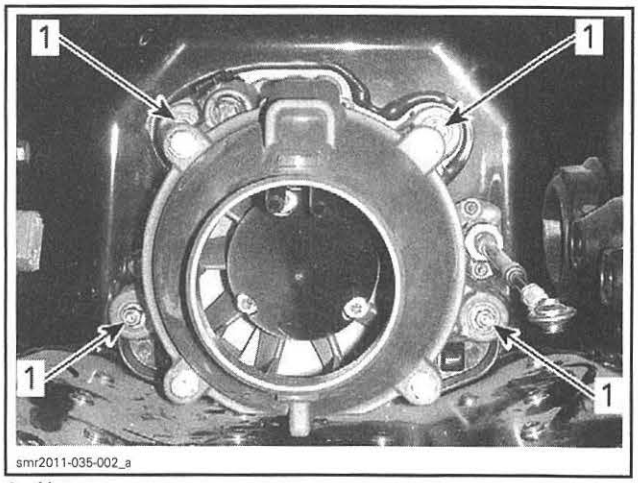

1. Nuts to remove

4. Pull back jet pump housing to remove it from the pump support. It may be necessary to wiggle it slightly as you pull back on the pump.

Temporarily fasten the PUMP PLATE (P/N 529 036 224) to pump support to support drive shaft and avoid PTO oil seal damage.

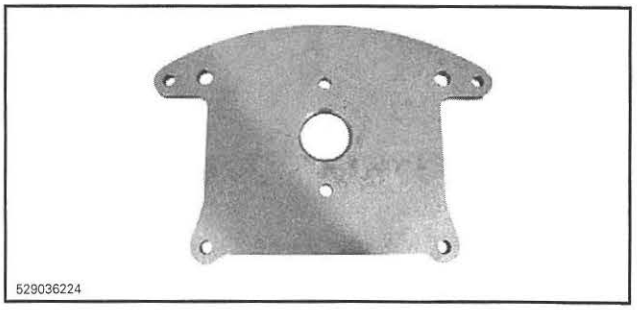

Jet Pump Housing Inspection and Cleaning

1. Visually inspect jet pump housing. Pay attention to the stator. Ensure the assembly is clean and free of any debris and defects.

Do the following as applicable.

2. Blow low pressure compressed air through the pressure outlet fitting and make sure it is clear.

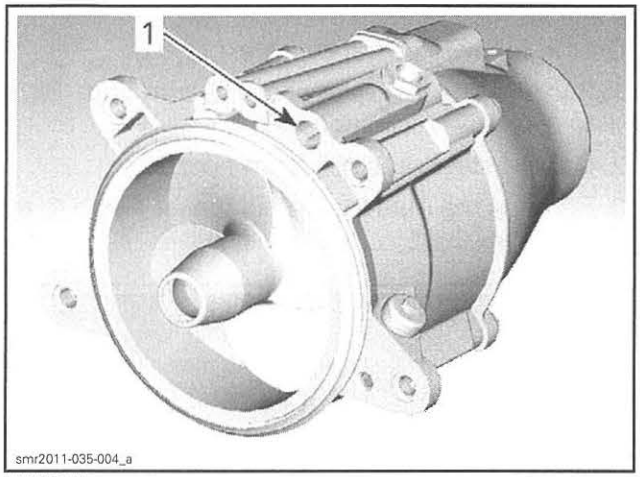

TYPICAL
1. Pressure outlet

3. Ensure cap screw is tight.
4. Ensure the neoprene seal is in good condition. Replace as required.

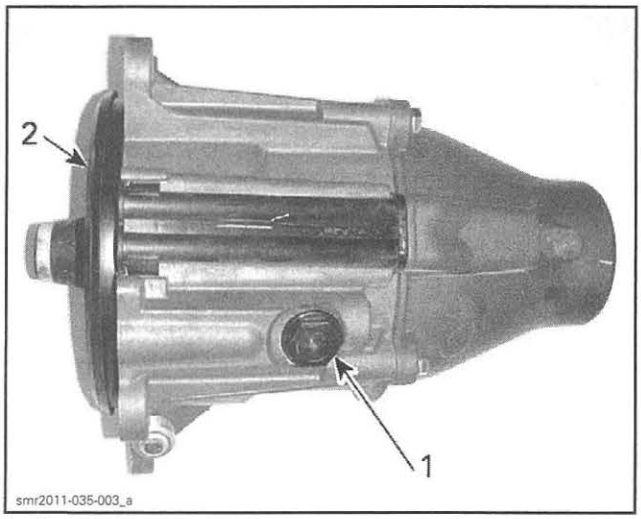

1. Cap screw
2. Neoprene seal

Jet Pump Housing Installation

Brush and clean impeller splines and drive shaft splines with PULLEY FLANGE CLEANER (P/N 413 711 809) or equivalent. Splines must be free of any residue.

Lubricate drive shaft splines, impeller splines and the inside of the impeller boot with TRIPLE-GUARD GREASE (P/N 296 000 329).

Ensure the neoprene seal is properly installed on the jet pump.

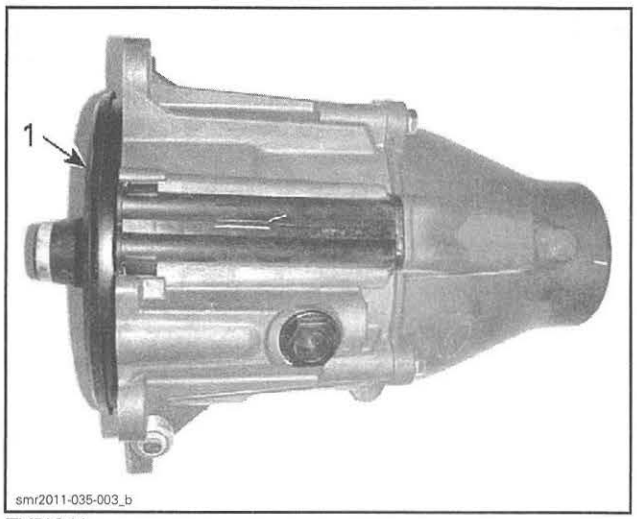

TYPICAL
1. Neoprene seal

Install new O-rings then slide water outlet adapter onto pump.

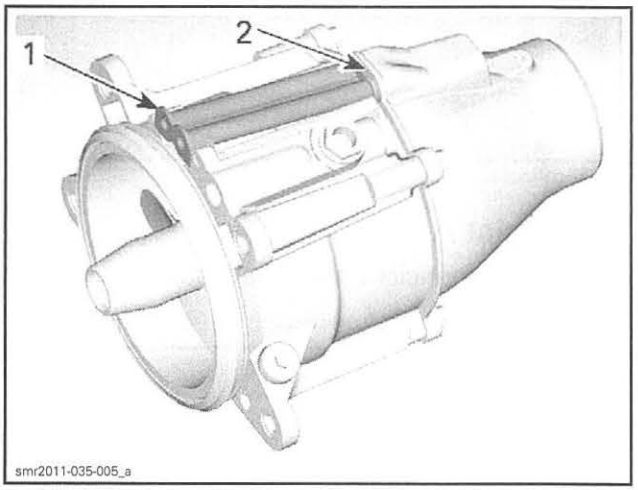

1. Slide adapter onto pump
2. New O-rings here

Install new O-rings on pump support.

The water flow is controlled by a calibrated reducer. Ensure to install the proper reducer.

REDUCER	
ENGINE	COLOR CODE
130/155/215	Yellow
260	Green

NOTICE Improper reducer can cause overheating and damage to exhaust system.

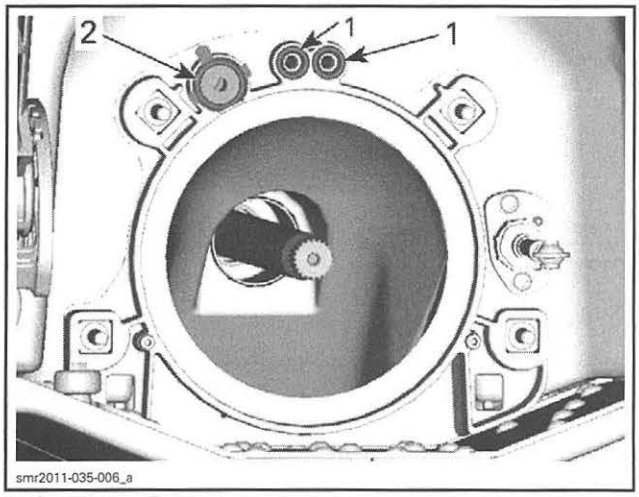

1. *Install new O-rings*
2. *Calibrated reducer*

Generously apply TRIPLE-GUARD GREASE (P/N 296 000 329) on drive shaft splines.

Install jet pump.

NOTE: If necessary, wiggle jet pump to engage drive shaft splines in impeller.

Install new nuts and torque as per table and the illustrated sequence.

TORQUE
22 N•m (16 lbf•ft)

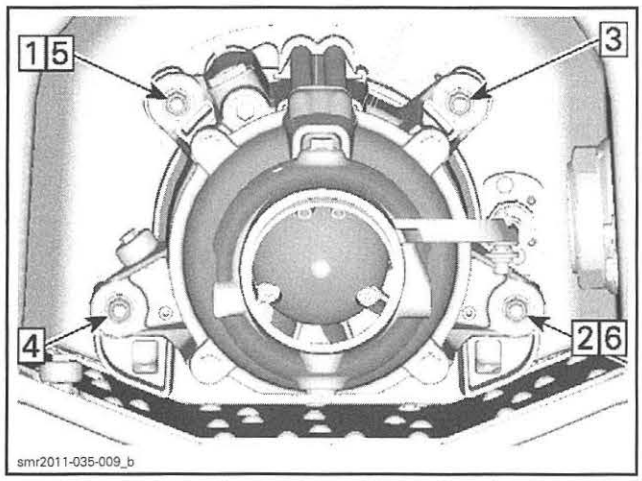

NOTE: Slightly lubricate wear ring with XPS LUBE (P/N 293 600 016) to minimize friction during initial impeller start.

VENTURI

Venturi Removal

Jet Pump Housing installed

As applicable, do the following.

1. Remove the iBR gate and VTS trim ring as an assembly. Refer to *iBR AND VTS* subsection.
2. Remove nozzle.
3. Cut locking ties and remove the 2 bailer hoses from the venturi.
4. Refer to *JET PUMP HOUSING REMOVED* to continue procedure.

Jet Pump Housing Removed

1. Remove the screws retaining the venturi to the jet pump housing.

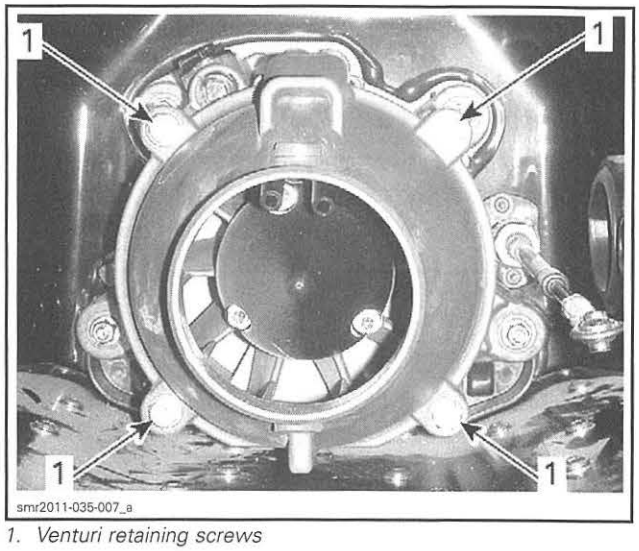

1. *Venturi retaining screws*

Venturi Installation

The installation is the reverse of the removal procedure. Pay attention to the following.

As applicable, align venturi bailer holes with those in pump support.

Apply LOCTITE 243 (BLUE) (P/N 293 800 060) on threads of venturi screws (or install new self-locking screws).

Install venturi screws and flat washers.

Torque venturi screws to 21 N•m (15 lbf•ft).

As applicable, ensure bailer hoses and fittings are in good condition.

IMPELLER COVER

Impeller Cover Removal

1. Remove the venturi.
2. With pump housing in vertical position, remove and discard the 3 retaining screws.

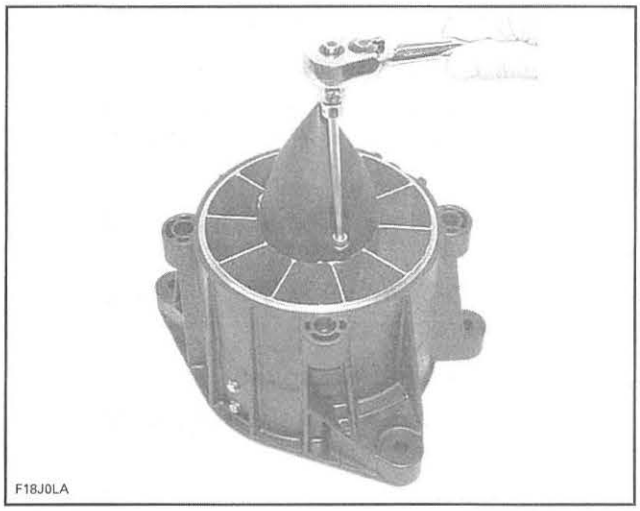

TYPICAL

3. Using a fiber hammer, gently tap impeller cover to help release it from the jet pump housing.
4. Use a flat screwdriver in the slots provided as pry points to remove it from the jet pump housing.

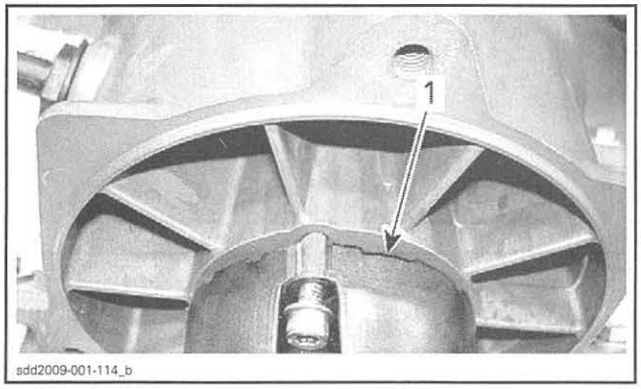

1. Slot

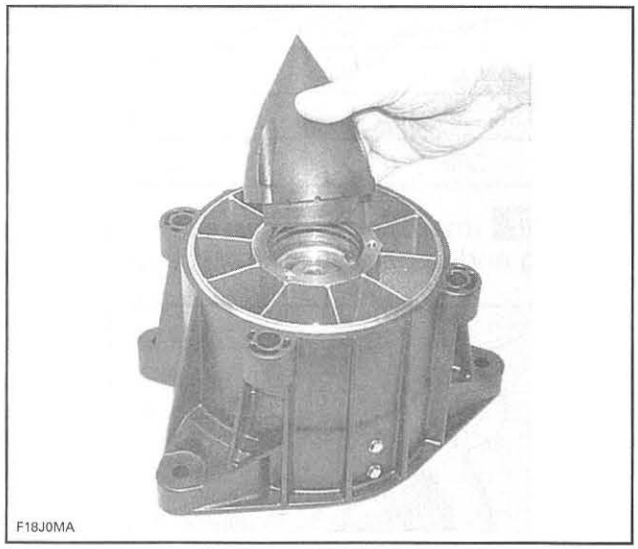

TYPICAL

5. Remove both O-rings.

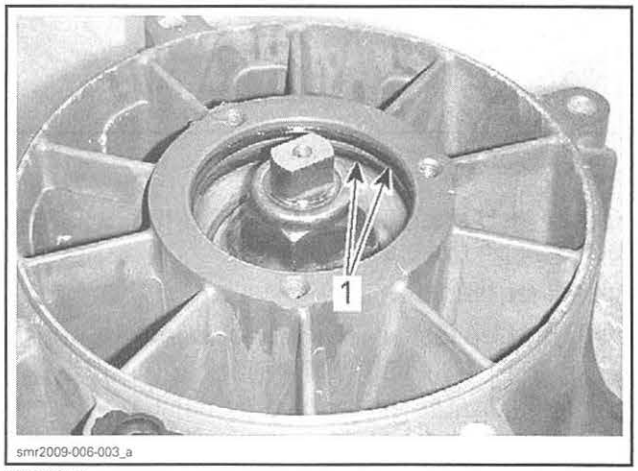

TYPICAL
1. O-rings

Impeller Cover Inspection

Check for presence of water in cover and bearing area. If water is found, replace seals on impeller side. Also replace O-rings and/or impeller cover.

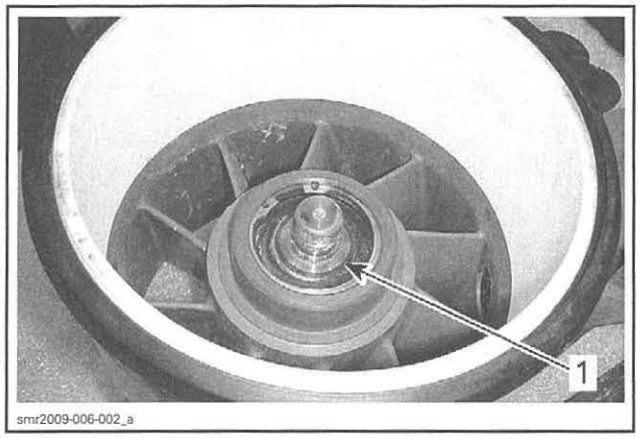

1. Seal on impeller side

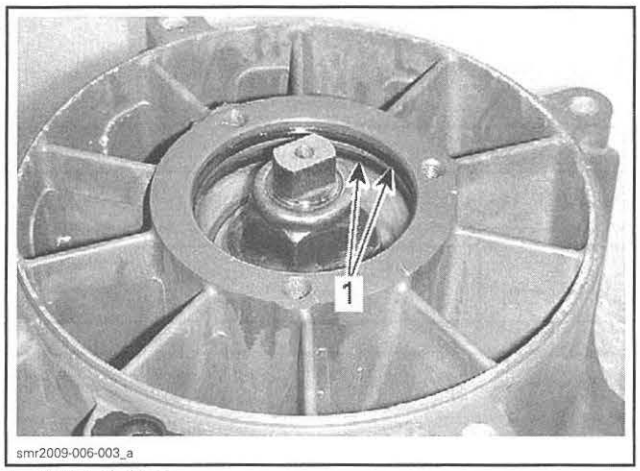

1. Cover O-rings

Check impeller boot and O-rings condition on impeller. Replace as required.

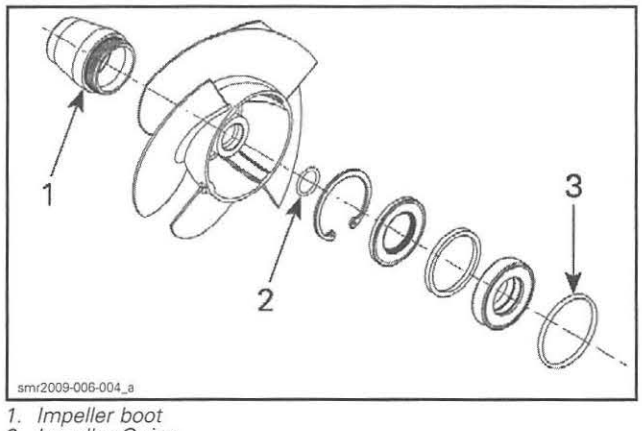

1. Impeller boot
2. Impeller O-ring
3. Pump housing O-ring

Perform a leak test. Refer to *LEAK TEST* in this subsection.

Impeller Cover Installation

1. Install O-rings in their respective groove.

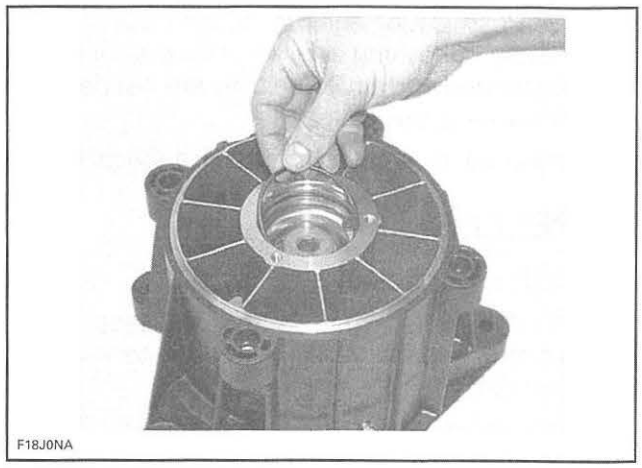

TYPICAL

2. Put 23 ml (.8 U.S. oz) of JET PUMP BEARING GREASE (P/N 293 550 032) in the cover.

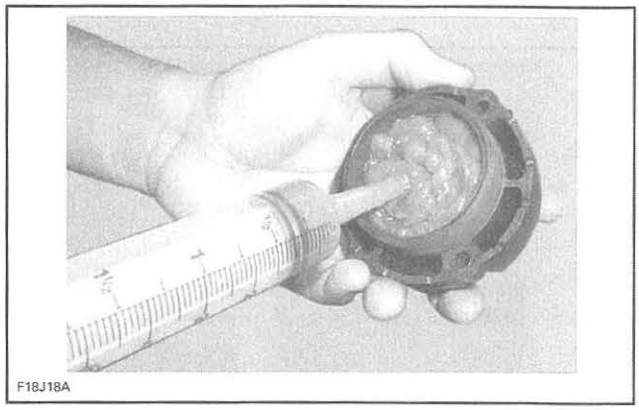

TYPICAL

3. Install impeller cover by aligning the cover index mark with the pump top fin as shown.

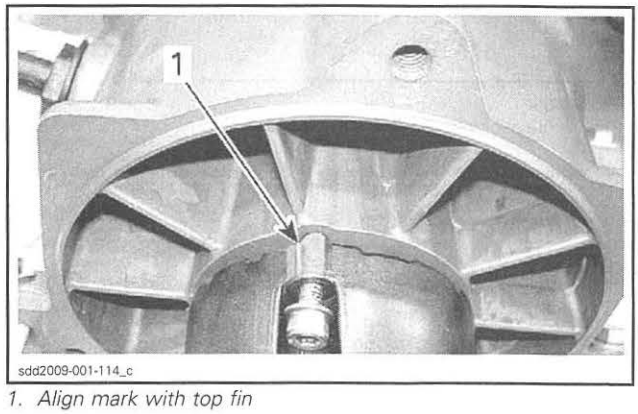

1. Align mark with top fin

NOTE: Cover can only be installed in one position as screw holes are not located symmetrically.

4. Secure cover with NEW self-locking screws.

NOTE: Push cover against pump housing while alternately tightening screws. Make sure O-rings are positioned correctly and they are not damaged when pushing the cover.

5. Torque cover screws to 7.5 N•m (66 lbf•**in**).

IMPELLER

Impeller Removal

NOTE: If impeller shaft is to be disassembled, loosen the impeller shaft nut prior to removing the impeller.

1. Remove jet pump from the watercraft. Refer to *JET PUMP HOUSING* in this subsection.
2. Remove impeller cover. Refer to *IMPELLER COVER* in this subsection.
3. Remove impeller boot by turning it clockwise (LH threads).

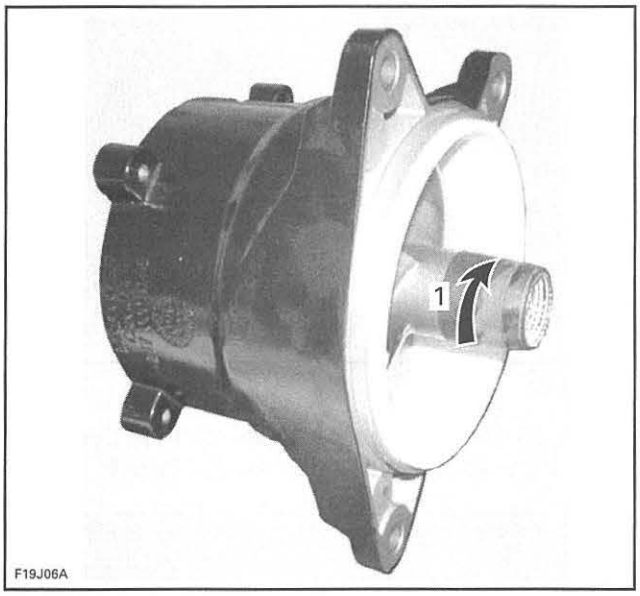

TYPICAL
1. Unscrew clockwise

4. Mount the flat sides of impeller shaft in a vise.

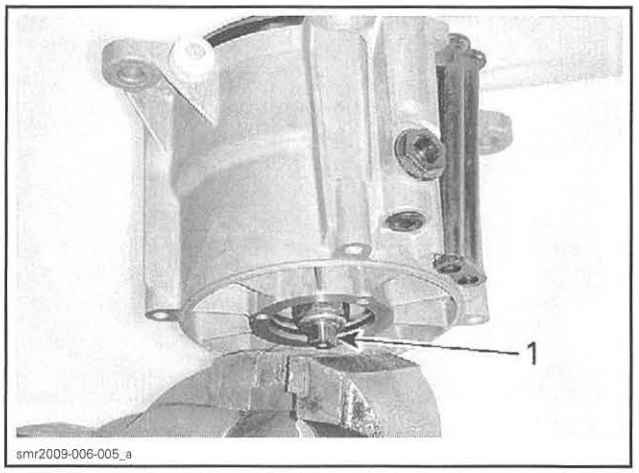

TYPICAL
1. Flat side

5. Unscrew the impeller counterclockwise using the required tool.

ENGINE	REQUIRED TOOL
100, 130, 155	IMPELLER REMOVER/INSTALLER (P/N 529 035 820)
215, 260	IMPELLER REMOVER/INSTALLER (P/N 529 035 956)

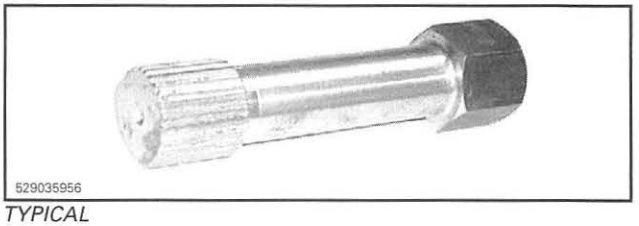

TYPICAL

NOTE: It may be necessary to heat the impeller to ease removal.

NOTICE **Never use an impact wrench to loosen impeller.**

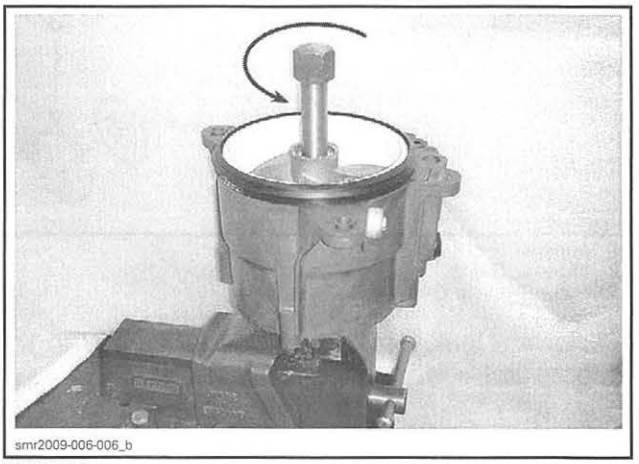

TYPICAL

6. To pull impeller out of the pump, apply a rotating movement as you pull on the impeller.

Impeller Installation

1. Mount the flat sides of the impeller shaft in a vise.

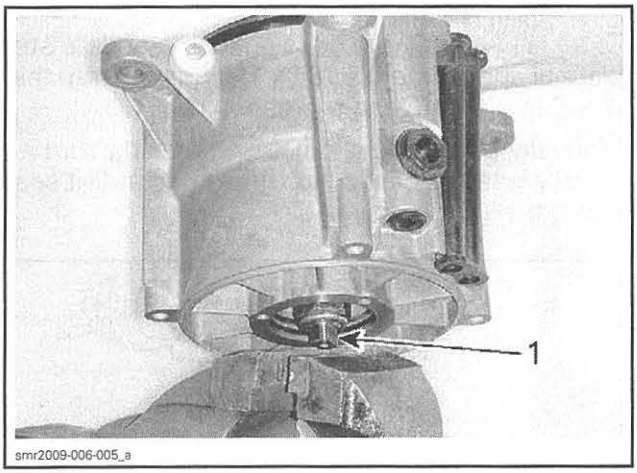

TYPICAL
1. Flat side

2. Apply LOCTITE 767 (ANTISEIZE LUBRICANT) (P/N 293 800 070) on threads of impeller shaft.

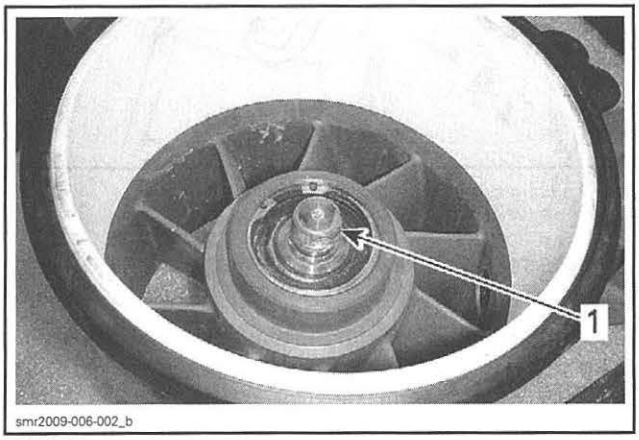

TYPICAL
1. Antiseize lubricant

3. Apply XPS LUBE (P/N 293 600 016) on the wear ring surface.

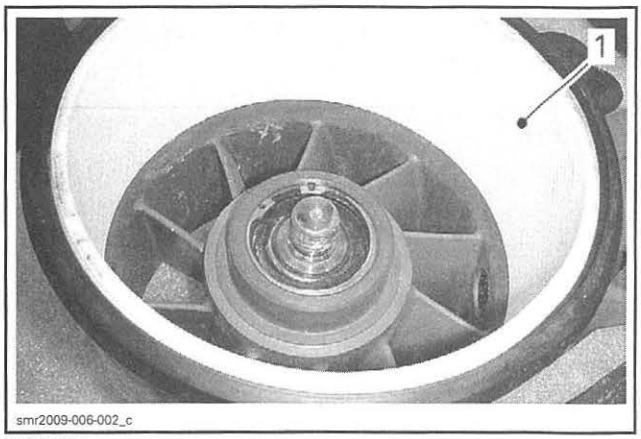

TYPICAL
1. XPS lube

4. Start screwing the impeller on its shaft.

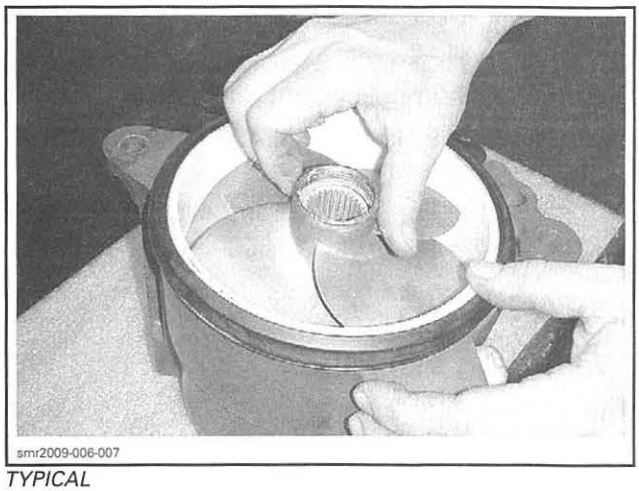

TYPICAL

5. Mount the required tool in impeller splines.

ENGINE	REQUIRED TOOL
100, 130, 155	IMPELLER REMOVER/INSTALLER (P/N 529 035 820)
215, 260	IMPELLER REMOVER/INSTALLER (P/N 529 035 956)

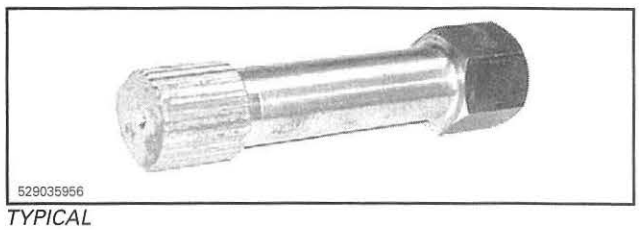

TYPICAL

6. Torque impeller as per table.

TORQUE
125 N•m (92 lbf•ft)

Remove tool.

NOTICE Never use an impact wrench to tighten impeller shaft.

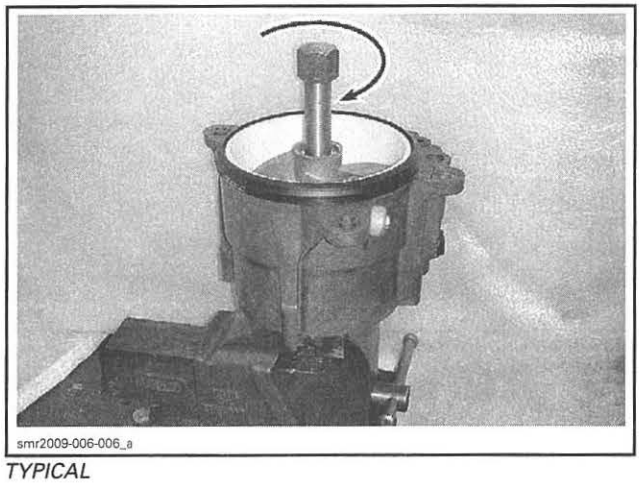

TYPICAL

7. Apply LOCTITE 577 (THREAD SEALANT) (P/N 293 800 050) on impeller boot threads.
8. Apply TRIPLE-GUARD GREASE (P/N 296 000 329) inside impeller boot.
9. Install impeller boot on impeller and tighten counterclockwise.

WEAR RING

Wear Ring Inspection

Check wear ring for:
- Deep scratches
- Irregular surface
- Any apparent damage.

Check *IMPELLER/WEAR RING CLEARANCE*, see procedure at the beginning of this subsection.

Wear Ring Removal

1. Remove the iBR gate, VTS trim ring and the steering nozzle as an assembly. See procedure in *IBR AND VTS* subsection.
2. Remove jet pump from watercraft. Refer to *JET PUMP HOUSING* in this subsection.
3. Remove impeller from jet pump housing, refer to *IMPELLER* in this subsection.
4. Place jet pump housing in a vise with soft jaws. It is best to clamp housing using a lower ear.
5. Cut wear ring at two places.

NOTICE When cutting ring, be careful not to damage jet pump housing.

NOTE: Wear ring can be cut using a jigsaw, a small grinder or a low clearance hacksaw.

6. After cutting ring, insert a screwdriver blade between jet pump housing and ring outside diameter.
7. Push ring so that it can collapse internally.
8. Pull ring out.

Wear Ring Installation

To install wear ring in housing, use a square steel plate of approximately 180 x 180 mm x 6 mm thick (7 x 7 in x 1/4 in) and a press.

Manually engage ring in housing making sure it is equally inserted all around. Press ring until it seats into bottom of housing.

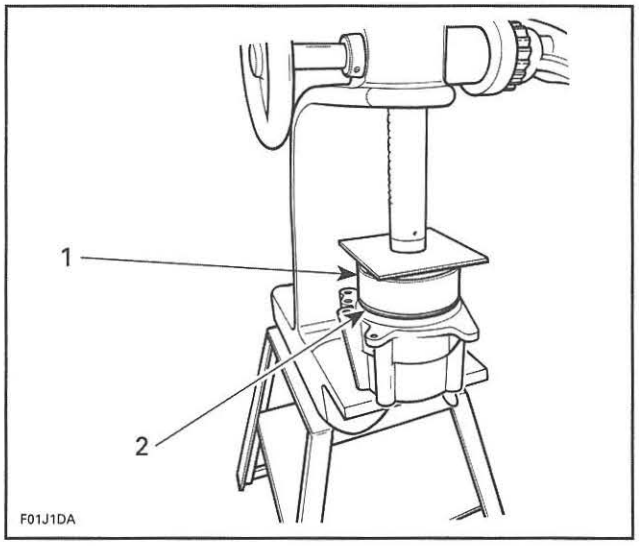

1. Rounded edge
2. Press wear ring

If a press is not readily available, a piece of wood such as a 2 x 4 in x 12 in long, can be used.

Manually engage ring in housing making sure it is equally inserted all around. Place wood piece over ring. Using a hammer, strike on wood to push ring. Strike one side then rotate wood piece about 90° and strike again. Frequently rotate wood piece so that ring slides in evenly until it seats into bottom of housing.

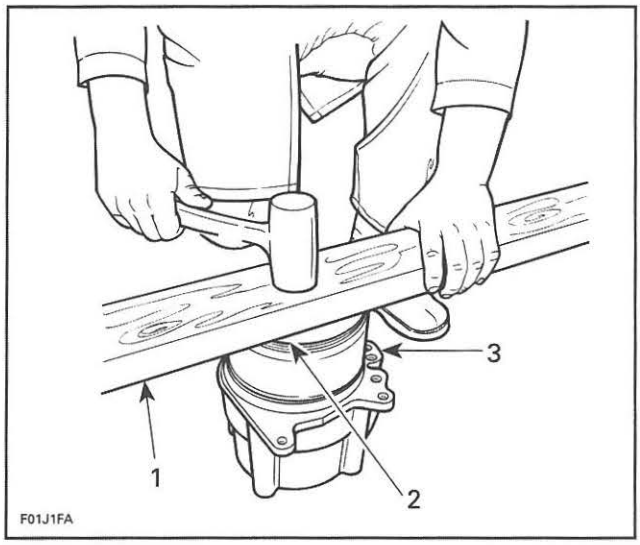

1. *Piece of wood*
2. *Rounded edge*
3. *Wear ring*

IMPELLER SHAFT AND BEARING

Impeller Shaft and Bearing Removal

1. Remove impeller cover. Refer to *IMPELLER COVER* in this subsection.
2. Mount in a vise the proper impeller remover/installer as per table.

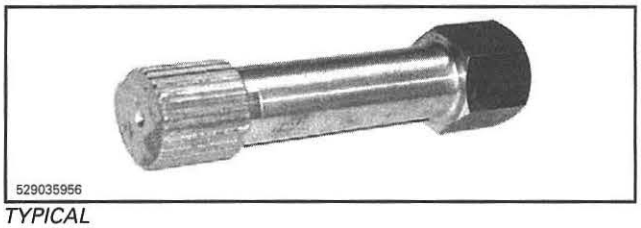

TYPICAL

ENGINE	REQUIRED TOOL
100, 130, 155	IMPELLER REMOVER/INSTALLER (P/N 529 035 820)
215, 260	IMPELLER REMOVER/INSTALLER (P/N 529 035 956)

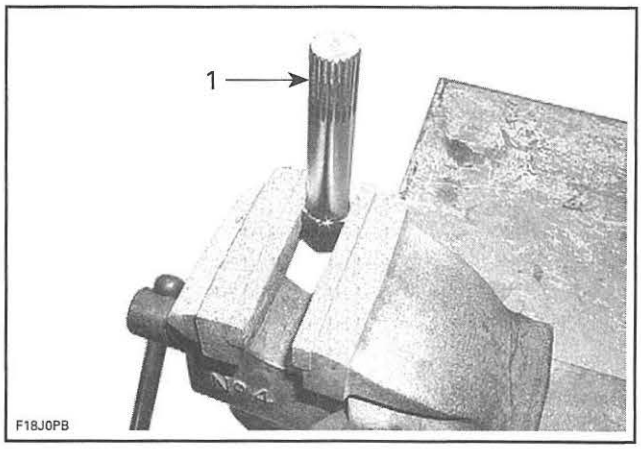

TYPICAL
1. *Impeller remover/installer tool*

3. Install jet pump housing over impeller remover/installer tool.



TYPICAL

4. Using a 30 mm socket, unscrew the impeller shaft nut counterclockwise.

NOTE: If impeller loosens instead of shaft nut, refer to *IMPELLER SHAFT NUT REMOVAL IF IMPELLER HAS LOOSENED* further in this procedure.

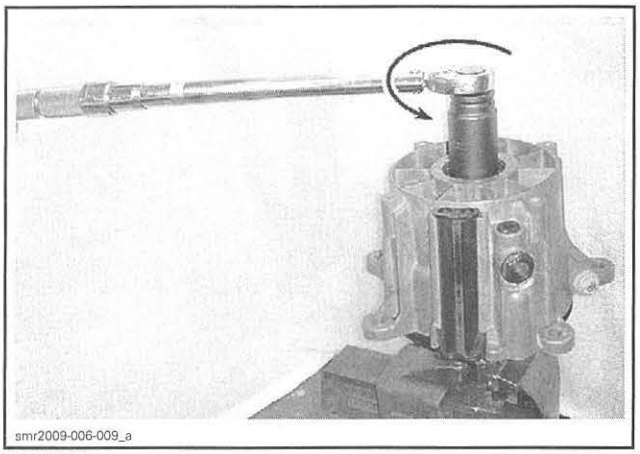
smr2009-006-009_a

TYPICAL

5. Remove impeller shaft nut.

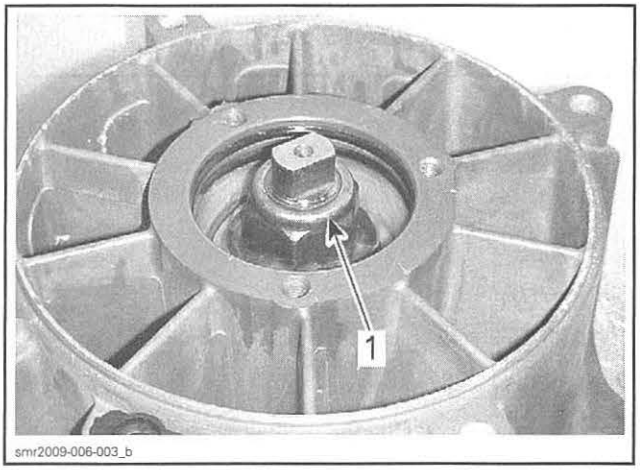

smr2009-006-003_b

TYPICAL
1. Nut

6. Remove impeller as described in this subsection.
7. From the impeller side, remove circlip, seals, spacer and O-ring.

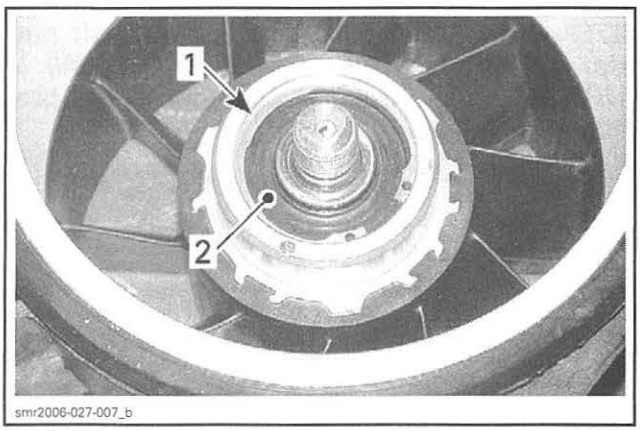

smr2006-027-007_b

TYPICAL
1. Circlip
2. Seal

8. Use the IMPELLER SHAFT PUSHER (P/N 529 035 955) to press impeller shaft out of pump housing.

NOTE: Bearing will come out with the impeller shaft.


529035955

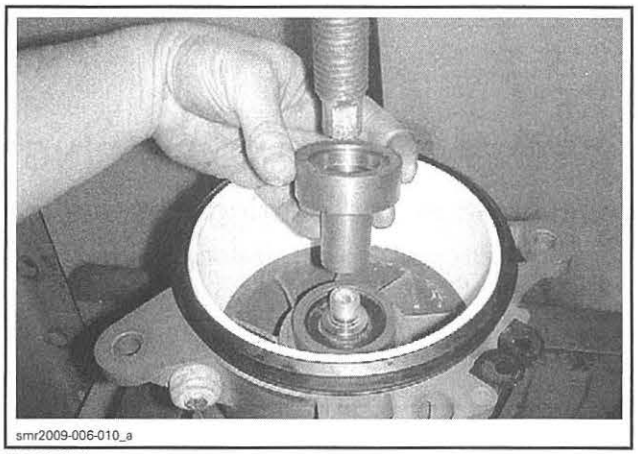
smr2009-006-010_a

TYPICAL

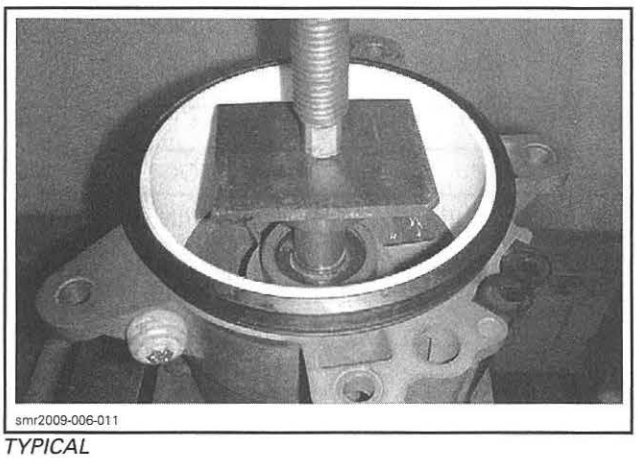
smr2009-006-011

TYPICAL

9. Use the IMPELLER SHAFT BEARING TOOL (P/N 529 036 168) to press bearing off impeller shaft.

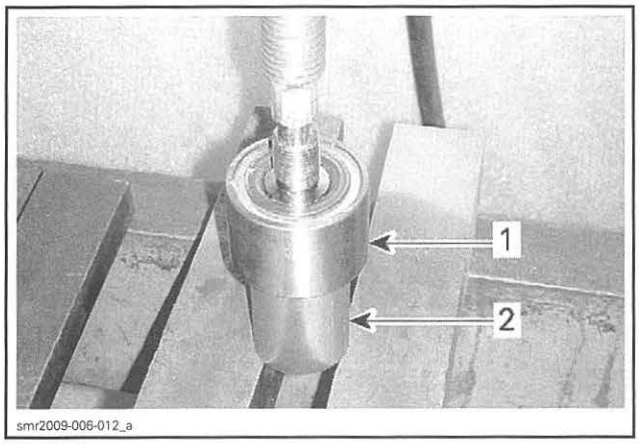

TYPICAL
1. *Impeller shaft and bearing*
2. *Bearing tool on INNER race*

Impeller Shaft Nut Removal if Impeller Has Loosened

1. Turn pump upside down and mount the flat sides of impeller shaft in a vise.

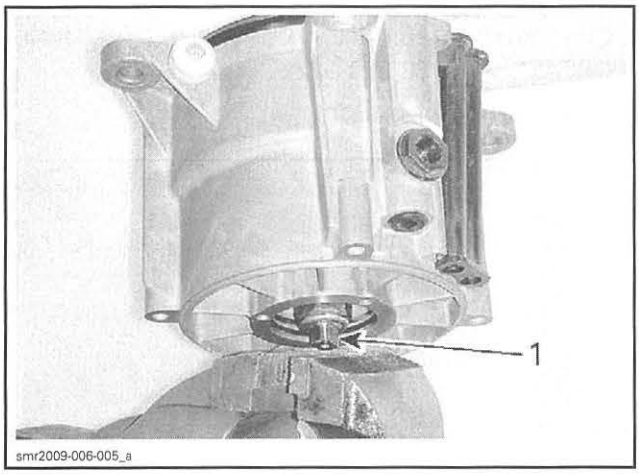

TYPICAL
1. *Flat side*

2. Mount in the impeller splines the proper impeller remover/installer as per table.

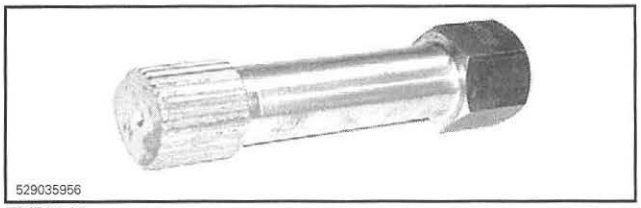

TYPICAL

ENGINE	REQUIRED TOOL
100, 130, 155	IMPELLER REMOVER/INSTALLER (P/N 529 035 820)
215, 260	IMPELLER REMOVER/INSTALLER (P/N 529 035 956)

3. Torque impeller more than impeller shaft nut.

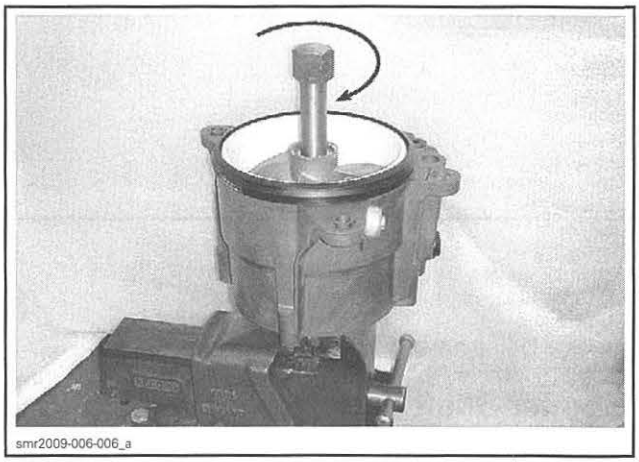

TYPICAL

4. Turn pump upside down and retry unscrewing impeller shaft nut.

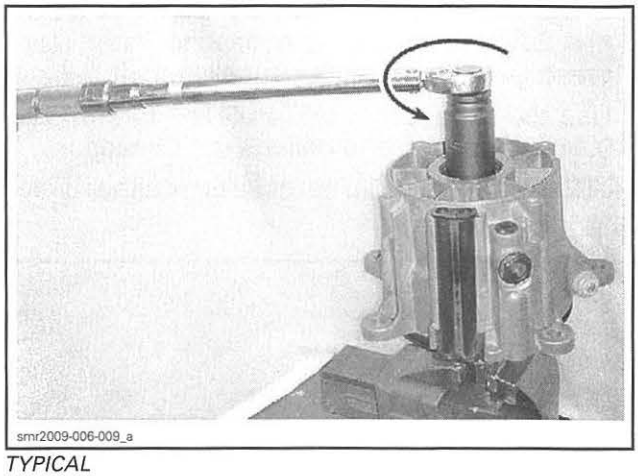

TYPICAL

5. If impeller still loosens instead of nut, retighten impeller more and retry. Repeat until nut loosens.
6. Remove impeller as described in this subsection.
7. Return to step 5 in the *IMPELLER SHAFT AND BEARING REMOVAL* main procedure.

Impeller Shaft and Bearing Inspection

With your finger nail, feel seal lip contact surface on shaft. If any irregular surface is found, replace shaft and seals.

Check condition of shaft threads.

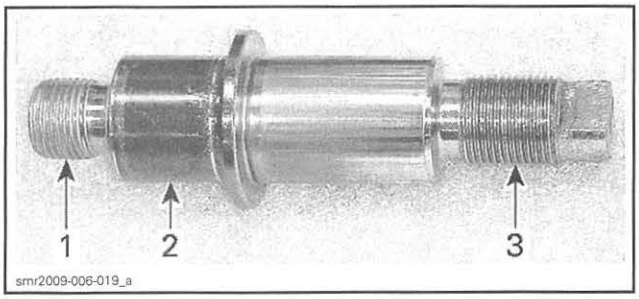

TYPICAL
1. *Threads*
2. *Seal lip contact surface*
3. *Threads*

Inspect ball bearing for corrosion.

Impeller Shaft and Bearing Installation

Bearing Installation

The installation is essentially the reverse of the removal procedure. However, pay attention to the following.

1. Using the IMPELLER SHAFT BEARING TOOL (P/N 529 036 168) on the bearing inner race, press the bearing on the impeller shaft.
2. Use the IMPELLER SHAFT PUSHER (P/N 529 035 955) to protect the impeller shaft threads.

NOTE: The bearing can be installed in either direction.

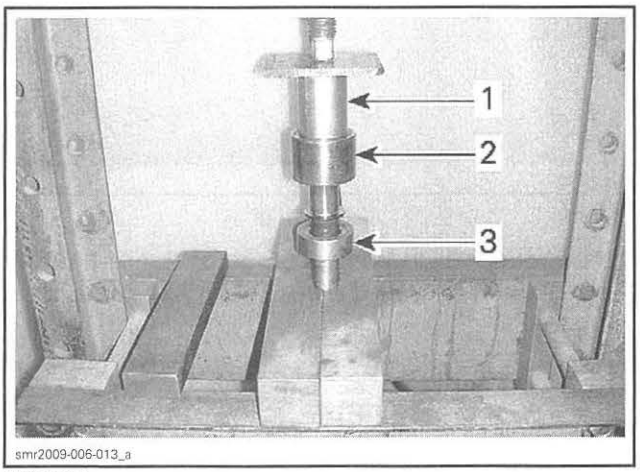

TYPICAL
1. *Impeller shaft bearing tool on INNER race*
2. *Impeller shaft and bearing*
3. *Impeller shaft installer/pusher tool*

3. Press bearing until it bottoms.

Impeller Shaft Installation

NOTE: Ensure there is no O-ring in pump housing on the cover side.

1. From the outlet side of pump, press impeller shaft assembly into housing using the IMPELLER SHAFT BEARING TOOL (P/N 529 036 168).

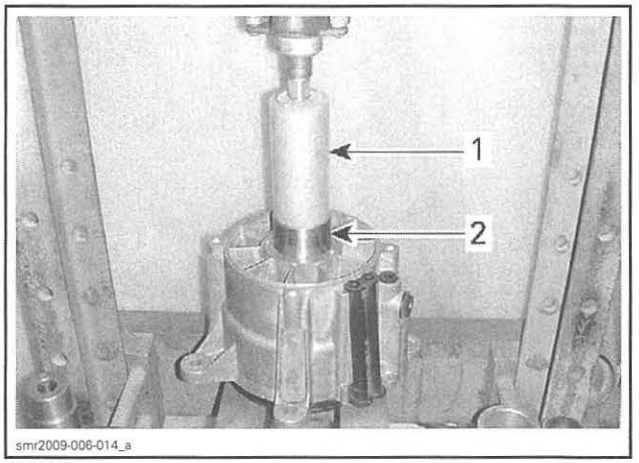

TYPICAL
1. *Bearing tool*
2. *Impeller shaft and bearing*

2. Press bearing until it bottoms.

NOTE: Ensure impeller shaft turns freely and smoothly.

3. Turn pump upside down.
4. Coat shaft surface with JET PUMP BEARING GREASE (P/N 293 550 032).
5. Install O-ring at bottom.

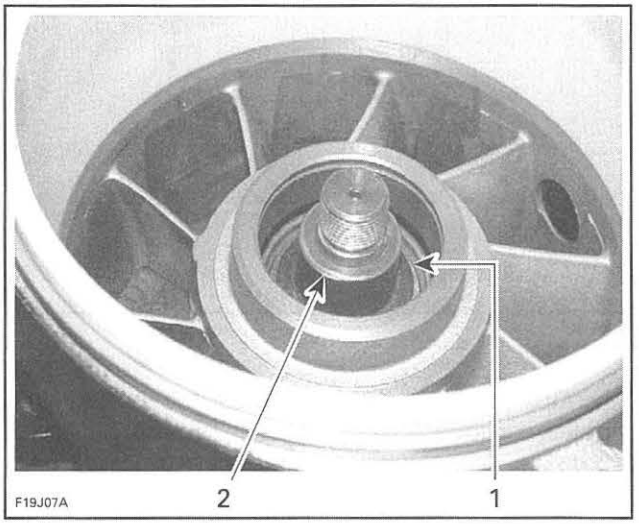

TYPICAL
1. *O-ring at bottom*
2. *Coat surface*

6. Apply 4 ml (.1 U.S. oz) of JET PUMP BEARING GREASE (P/N 293 550 032) on bearing.

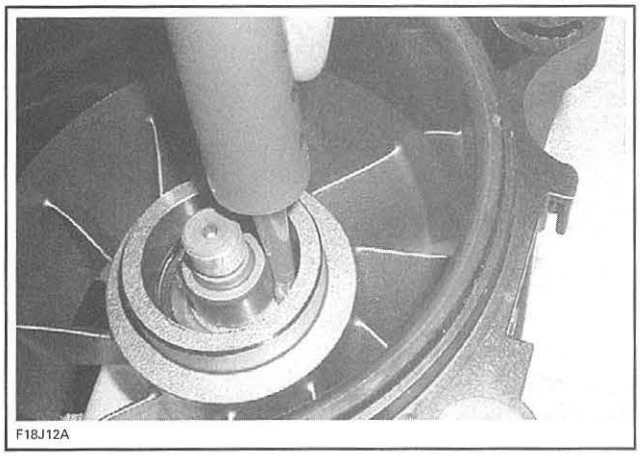
F18J12A

TYPICAL

7. Press a **NEW** double lip seal using the SEAL/BEARING PUSHER (P/N 529 035 819) until seal bottoms. Make sure seal lip are facing upwards.

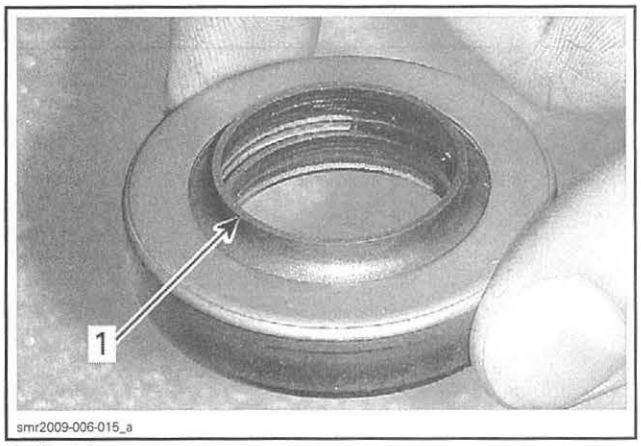

smr2009-006-015_a

1. Seal lip up

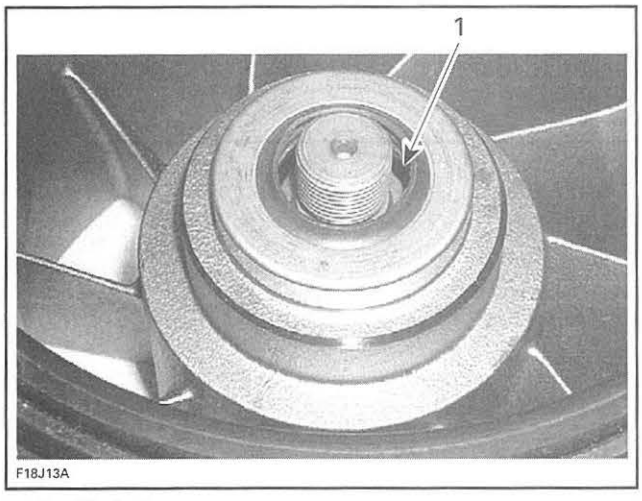

F18J13A

1. Seal lip facing up

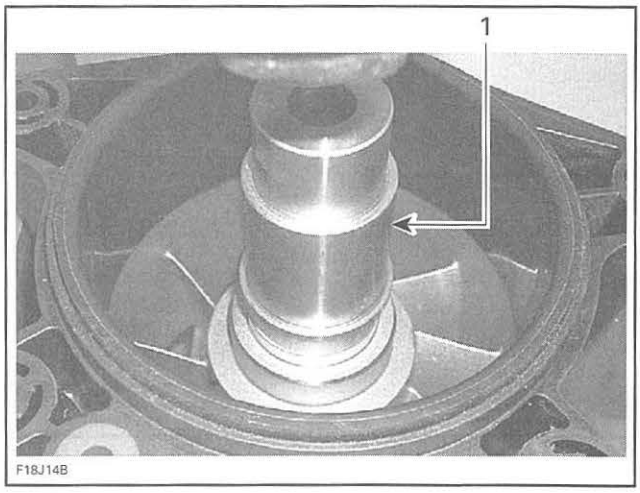

F18J14B

TYPICAL
1. Seal/bearing pusher

8. Install spacer and then the other seal (thin). Ensure seal lip is facing up.

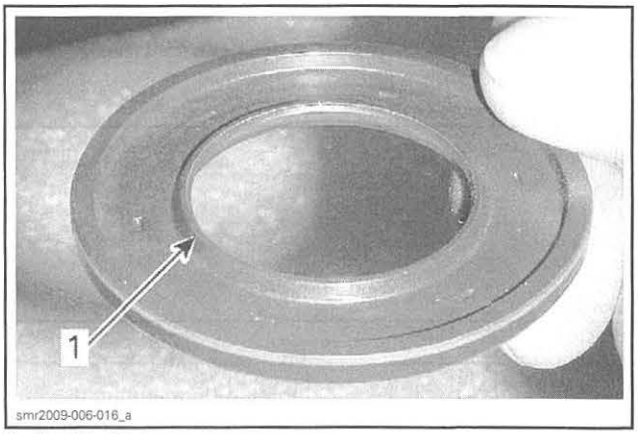

smr2009-006-016_a

1. Seal lip facing up

9. Install circlip.

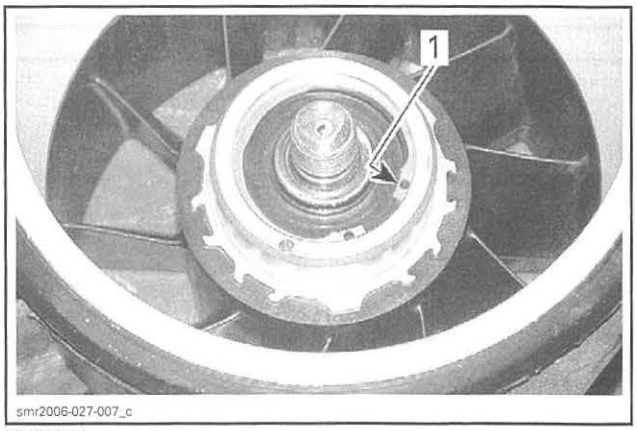

smr2006-027-007_c

TYPICAL
1. Circlip

10. Turn pump upside down.
11. Install the two O-rings in pump housing.

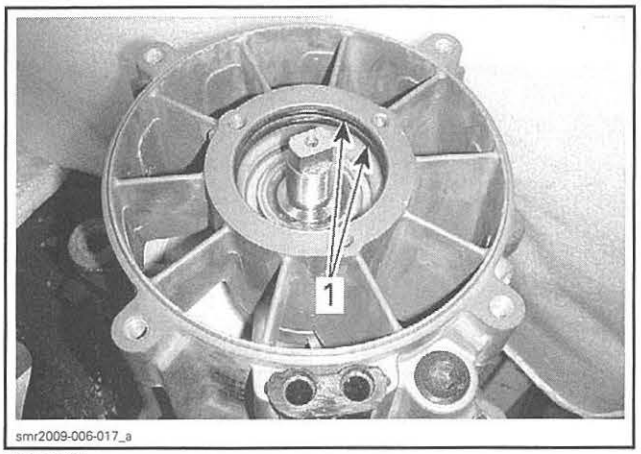

TYPICAL
1. O-rings

12. Before installing any other parts, pressurize jet pump to insure proper seal installation. Refer to *LEAK TEST* in this subsection.
13. Install impeller. Refer to *IMPELLER* in this subsection.
14. Mount in a vise the proper impeller remover/installer as per table.

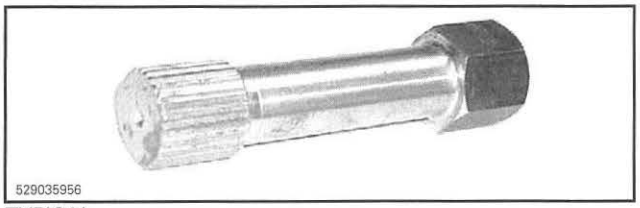

TYPICAL

ENGINE	TOOL P/N
100, 130, 155	IMPELLER REMOVER/INSTALLER (P/N 529 035 820)
215, 260	IMPELLER REMOVER/INSTALLER (P/N 529 035 956)

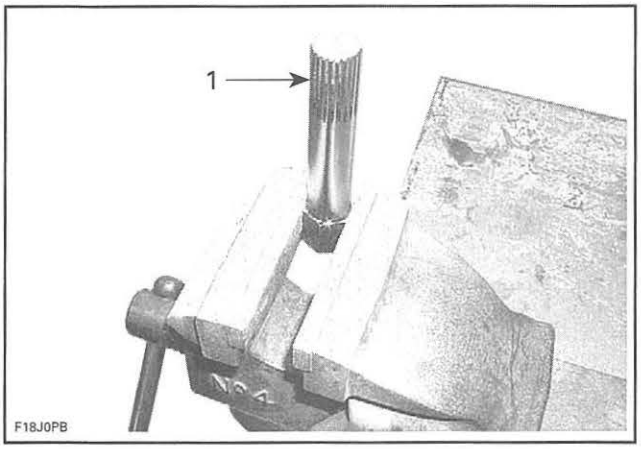

1. Impeller remover/installer tool

15. Install jet pump housing over this tool.



TYPICAL

16. Using a 30 mm socket, screw the impeller shaft nut on clockwise.
17. Torque nut as specified in exploded view.

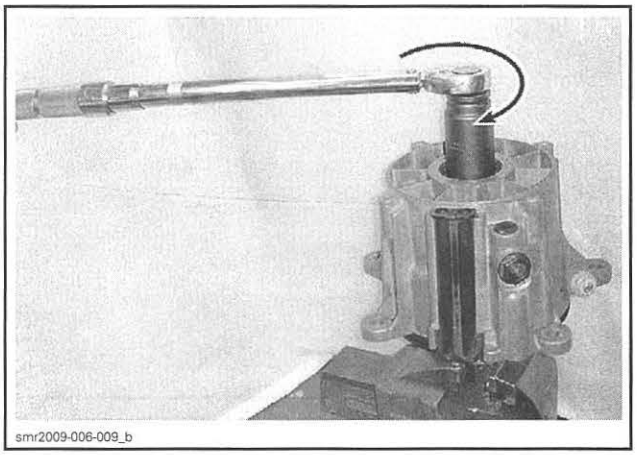

18. Apply 24 ml (.8 U.S. oz) of JET PUMP BEARING GREASE (P/N 293 550 032) on the bearing (nut side).

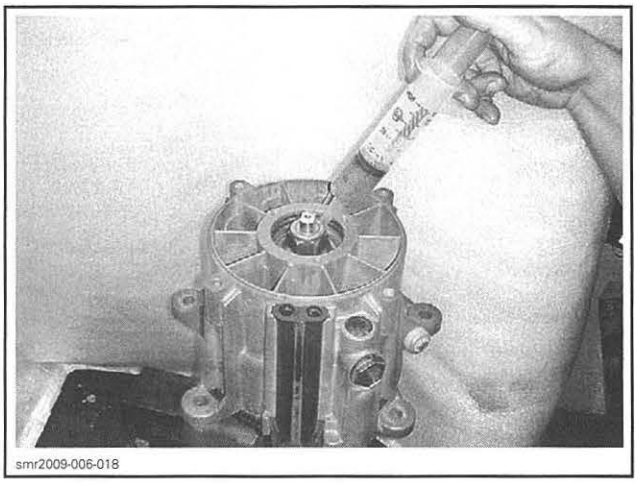

19. Install the impeller cover. Refer to *IMPELLER COVER* in this subsection.

NOZZLE (GTS MODELS)

Nozzle Removal

Disconnect steering cable from nozzle arm. Refer to *STEERING AND O.T.A.S.*

Remove screws retaining nozzle to venturi.

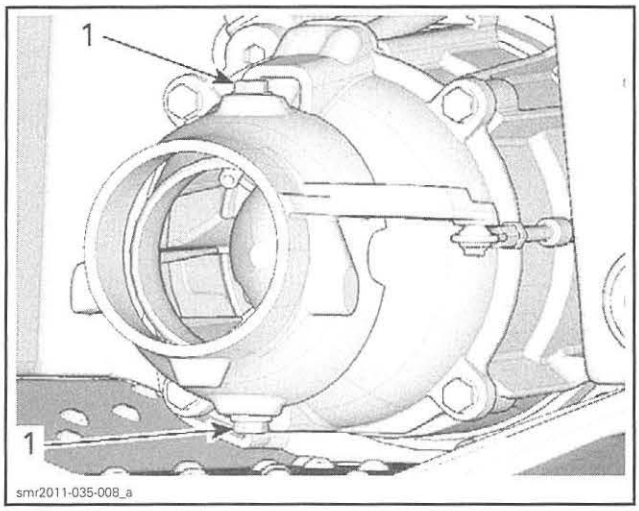

1. Screws

Remove nozzle.

Steering Nozzle Inspection

Inspect steering nozzle for cracks, wear, deformation, and other damages.

Inspect bushings for wear or other damage.

Replace parts as required.

Nozzle Installation

The installation is the reverse of the removal procedure. However, pay attention to the following.

Apply LOCTITE 243 (BLUE) (P/N 293 800 060) on screw threads (or use new self-locking screws).

Torque screws as per table..

TORQUE
21 N•m (15 lbf•ft)

Secure steering cable to nozzle arm. Refer to Refer to *STEERING AND O.T.A.S.*

Perform the *STEERING ALIGNMENT*. Refer to *STEERING AND O.T.A.S.*

DRIVE SHAFT

SERVICE TOOLS

Description	Part Number	Page
DRIVE SHAFT C-CLIP REMOVER	529 036 026	511
FLOATING RING TOOL (TYPE I)	529 035 841	512, 517
FLOATING RING TOOL (TYPE II)	529 036 116	512, 517
PTO SUPPORT TOOL	529 035 842	513, 515

SERVICE PRODUCTS

Description	Part Number	Page
PULLEY FLANGE CLEANER	413 711 809	514
XPS LUBE	293 600 016	512
XPS SYNTHETIC GREASE	293 550 010	515

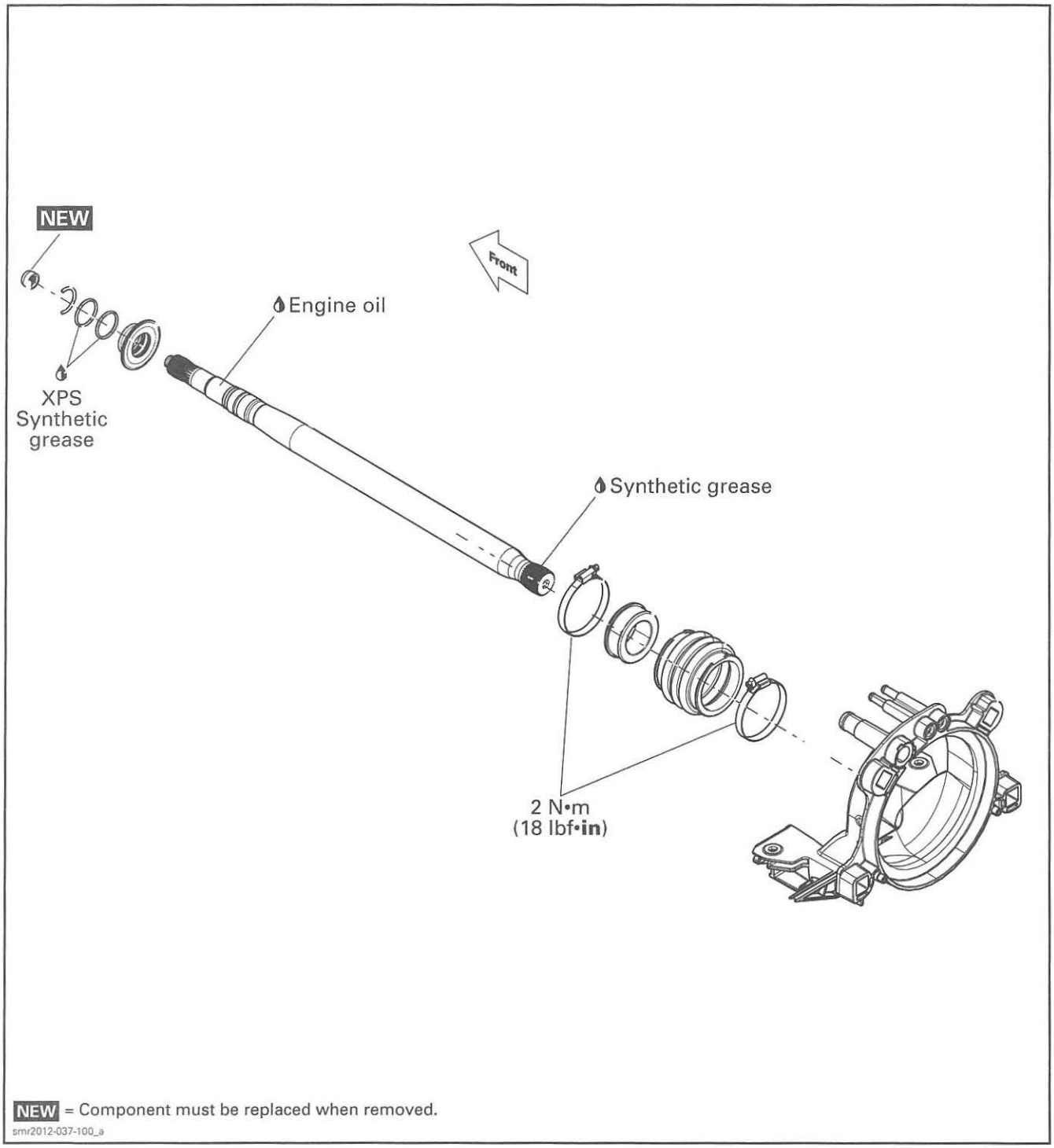

NEW = Component must be replaced when removed.

smr2012-037-100_a

PROCEDURES

DRIVE SHAFT

Drive Shaft Access

Models Without Suspension

1. Remove seat.
2. Remove seat bridge from body, **GTX, RXT and Wake Pro models.**
3. Remove the rear handle, **RXP-X models.**
4. Detach the air intake hose from the throttle body, **GTR and RXP-X models.**

Models With Suspension

1. Remove moving deck and deck extension. Refer to *BODY* subsection.
2. Remove the air intake silencer. Refer to *AIR INTAKE SYSTEM (MODELS WITH SUSPENSION)* subsection:
3. Detach the air intake hose from the throttle body.

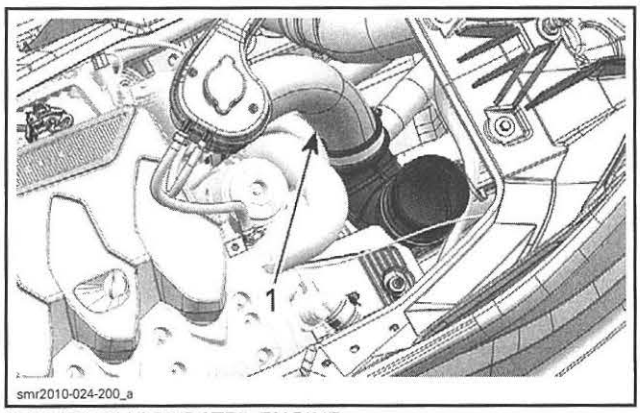

NATURALLY-ASPIRATED ENGINE
1. Detach intake hose at throttle body

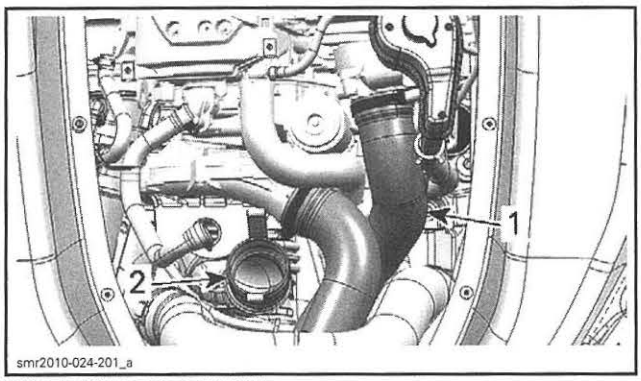

SUPERCHARGED ENGINE
1. Detach intake hose at throttle body
2. Supercharger hose

All Models

1. On **supercharged engines**, remove also the hose from the supercharger.
2. Drain cooling system and engine oil.
3. Disconnect the coolant tank hose from water pump housing and move coolant tank aside to make room.
4. Disconnect exhaust hose from the resonator. Place hose over muffler.
5. Remove water pump housing. Refer to *WATER PUMP HOUSING REMOVAL.*

Drive Shaft Removal

Preparation

Refer to *DRIVE SHAFT ACCESS* to remove required parts according to model.

To minimize oil spillage, syphon oil in engine PTO area. Refer to *PTO HOUSING REMOVAL* in *PTO HOUSING AND MAGNETO* subsection.

Procedures

NOTE: Ensure jet pump is installed before beginning this procedure.

1. Disconnect EGTS sensor as necessary.
2. Lift rubber protector to expose PTO seal assembly.
3. Confirm the floating ring is not stuck on drive shaft as follows:

REQUIRED TOOL
DRIVE SHAFT C-CLIP REMOVER (P/N 529 036 026)

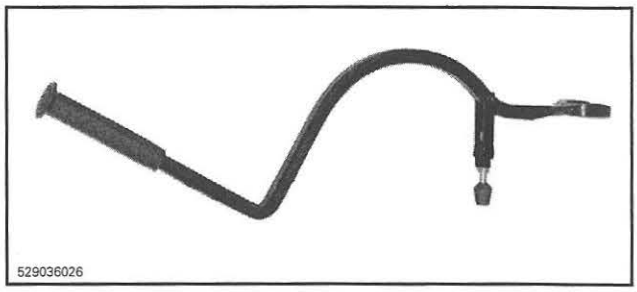

3.1 Place the fork of drive shaft circlip remover against floating ring.

3.2 Place the adjustable arm on engine.

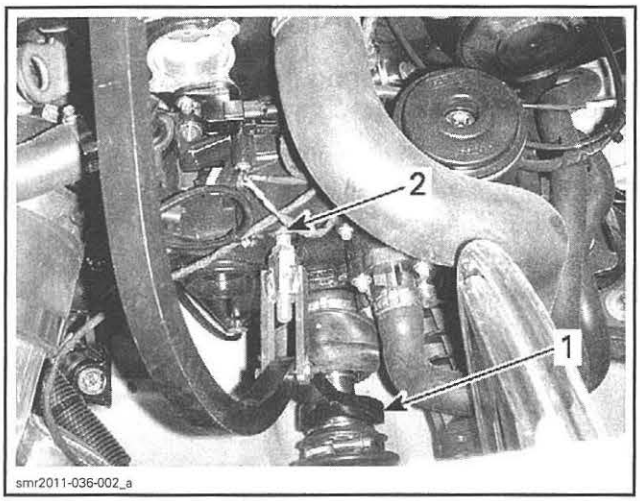

1. Fork against floating ring
2. Adjustable arm

3.3 Move the tool handle toward the front of vehicle to push floating ring rearward.

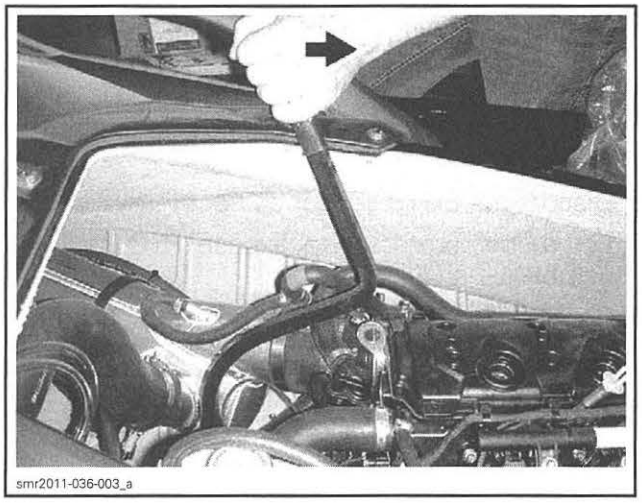

NOTE: Do not remove circlip at this time.

3.4 Remove the drive shaft C-clip remover.

4. Install the following tool on drive shaft with its largest opening on PTO side.

REQUIRED TOOL	
130 and 155 engines	FLOATING RING TOOL (TYPE I) (P/N 529 035 841)
215 and 260 engines	FLOATING RING TOOL (TYPE II) (P/N 529 036 116)

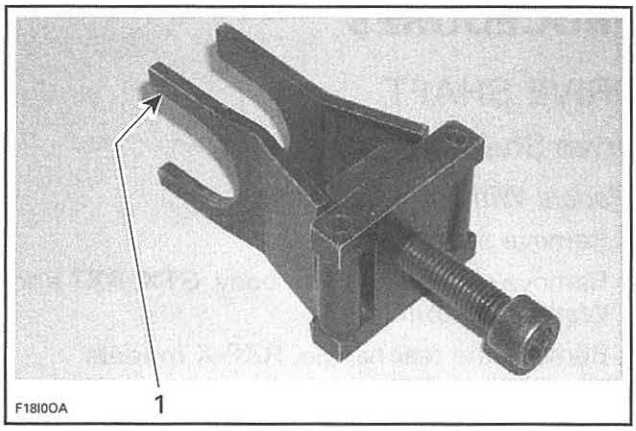

TYPICAL
1. Largest opening on PTO seal side

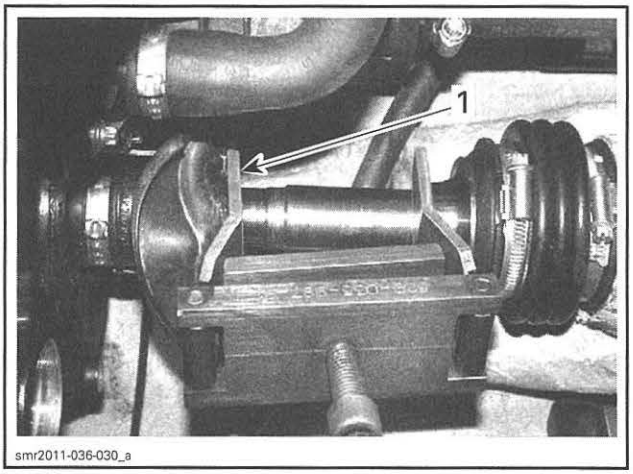

TYPICAL
1. Largest opening here

5. Turn tool screw CLOCKWISE until the following gap is obtained.

GAP BETWEEN TELLTALE GROOVE AND TOOL EDGE
18 mm (.71 in)

NOTE: This will expose the O-ring contact area.

6. Lubricate O-ring contact area with XPS LUBE (P/N 293 600 016).

NOTE: This is necessary to ease drive shaft removal later in this procedure.

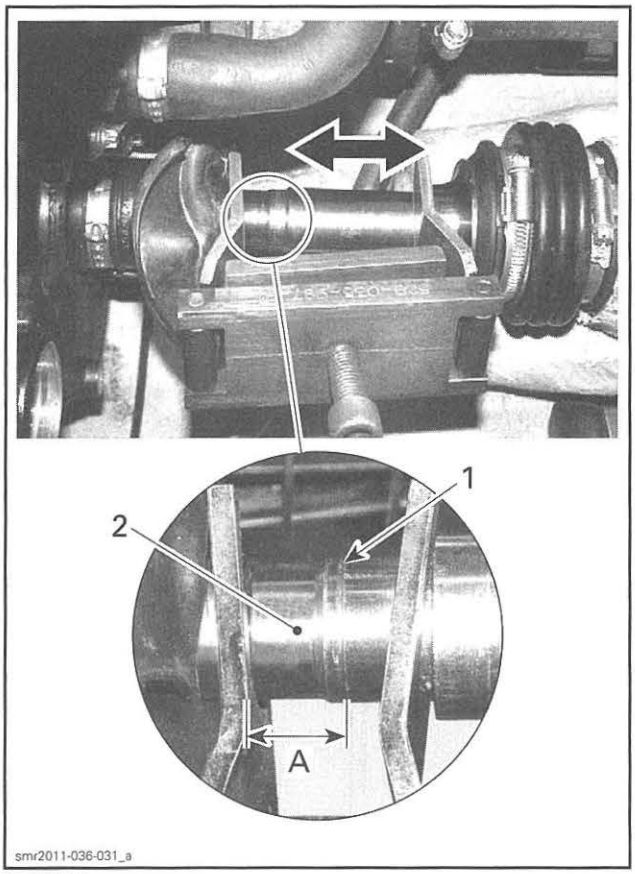

TYPICAL
1. *Telltale groove*
2. *Lubricate this area*

A. 18 mm (.71 in)

7. Remove the floating ring tool.
8. Install the following tool to PTO seal assembly.

REQUIRED TOOL
PTO SUPPORT TOOL (P/N 529 035 842)

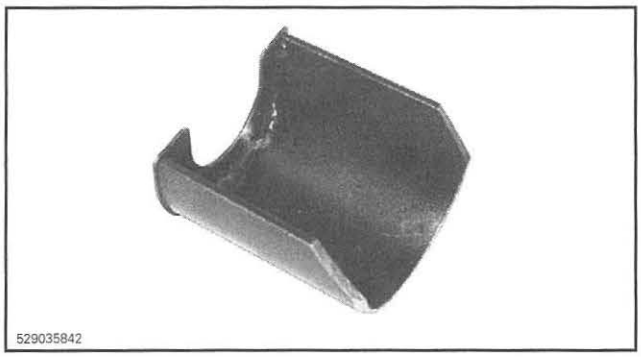

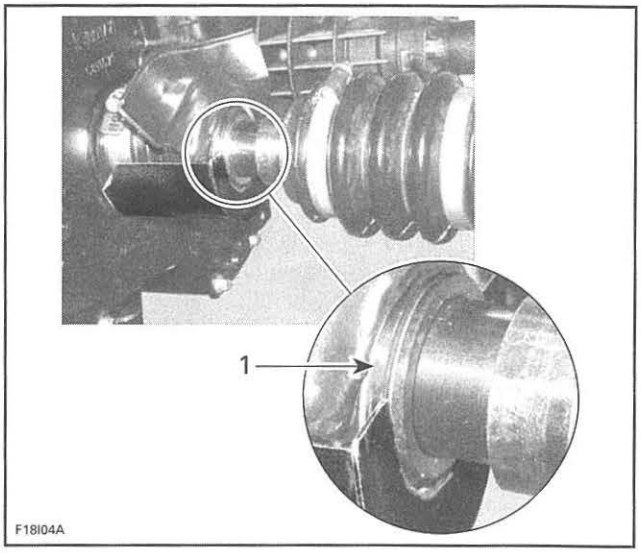

1. Insert in groove of PTO seal assembly

NOTICE Strictly follow this procedure otherwise damage to component might occur.

9. Reinstall the floating ring tool as shown.

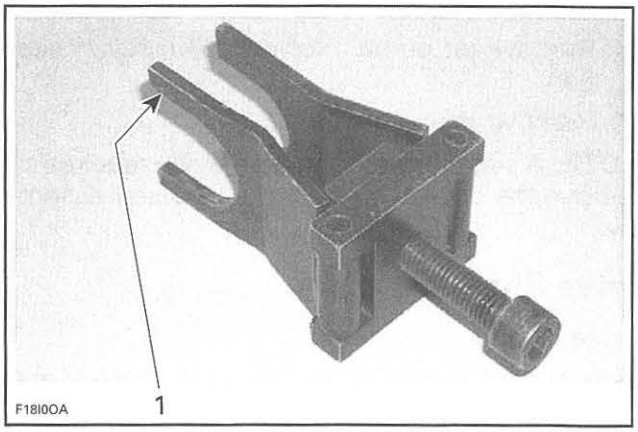

TYPICAL
1. Largest opening on PTO seal side

10. Turn screw of tool clockwise to push floating ring rearward to expose circlip.
11. Remove and discard circlip.

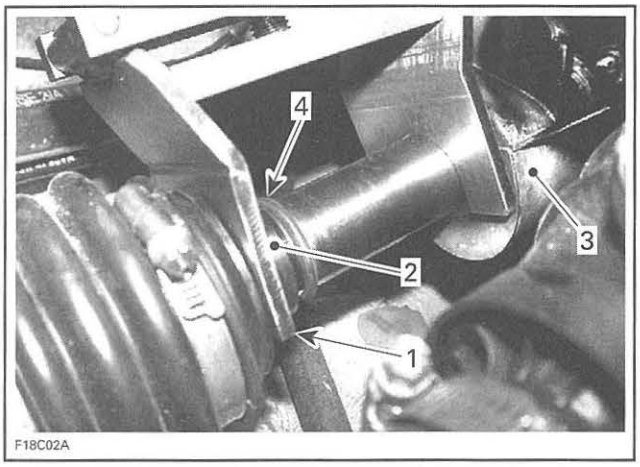

TYPICAL
1. *Largest opening here*
2. *Floating ring*
3. *PTO seal support tool*
4. *Remove circlip*

12. Remove the floating ring tool.
13. Place rags under PTO housing to prevent spillage. If spillage occurs, clean immediately with the PULLEY FLANGE CLEANER (P/N 413 711 809) to prevent oil stains.
14. Remove jet pump. Refer to *JET PUMP* section.
15. Remove drive shaft.

NOTE: A slight jerk to the rear may be required to remove the drive shaft from the PTO seal assembly.

Drive Shaft Inspection

Drive Shaft

Inspect condition of circlip groove. If there is any damage or severe wear, replace drive shaft.

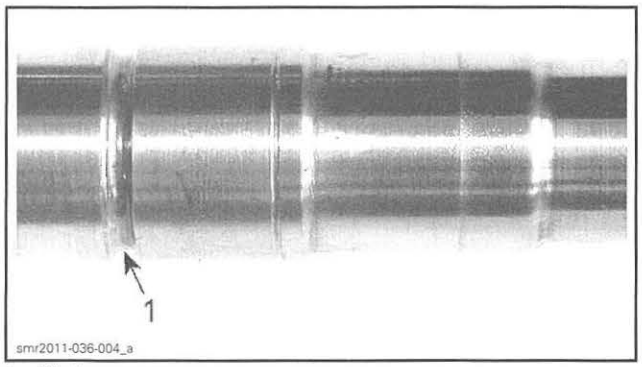

1. Circlip groove

Inspect condition of drive shaft splines. If splines are damaged, replace drive shaft.

With your finger nail, feel machined surface of drive shaft. If any irregular surface is found, renew drive shaft.

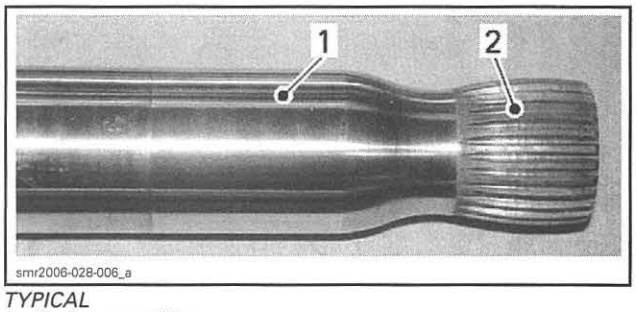

TYPICAL
1. *Surface condition*
2. *Splines condition*

Excessive deflection could cause vibration and damage to drive shaft splines, impeller or floating ring.

Place drive shaft on V-blocks and set-up a dial gauge in center of shaft. Slowly rotate shaft; difference between highest and lowest dial gauge reading is deflection. Refer to the following illustration.

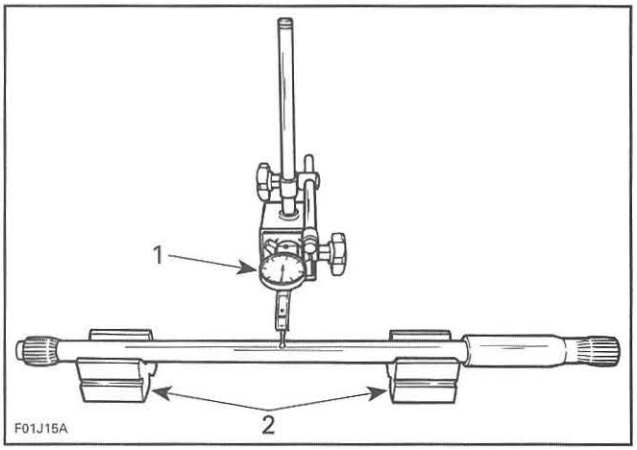

MEASURING DRIVE SHAFT DEFLECTION
1. *Dial gauge*
2. *V-blocks*

Maximum permissible deflection is 0.5 mm (.020 in).

Floating Ring

Inspect condition of O-rings and contact surface of floating ring.

Replace as required.

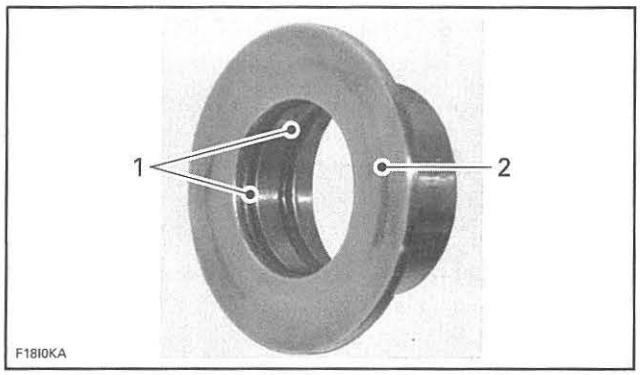

1. O-rings
2. Contact surface

Drive Shaft Installation

Before installing drive shaft, discard both O-rings inside PTO seal and install NEW ones.

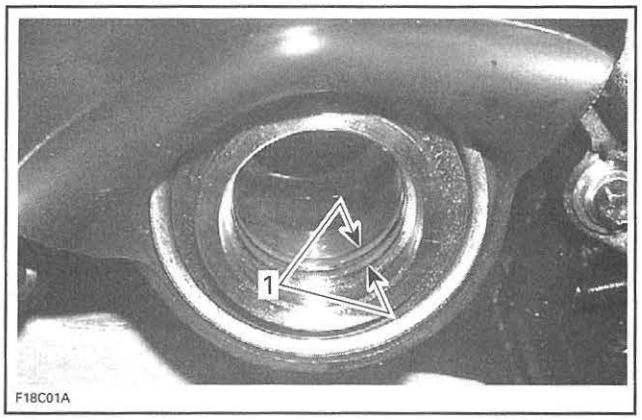

1. O-rings

Inspect PTO seal assembly. The inner sleeve must be flush with outer circumference of the assembly. Otherwise, gently push or tap on inner sleeve until flush.

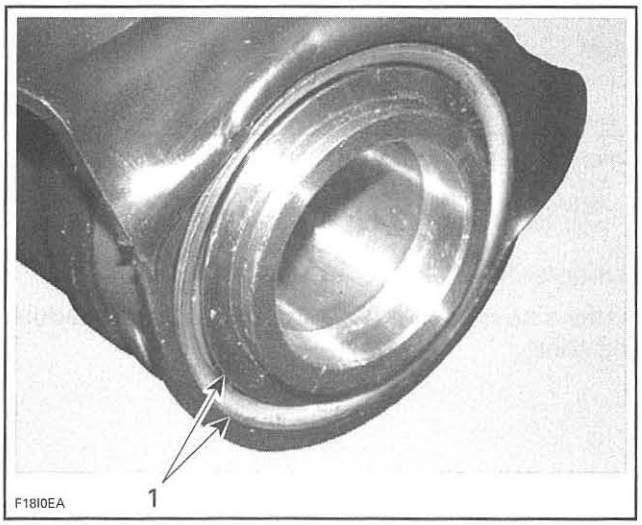

CORRECT POSITION
1. Inner sleeve flush with outer circumference

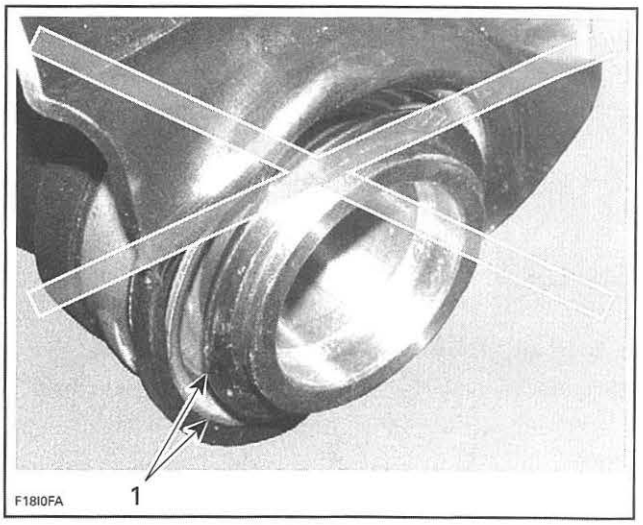

INCORRECT POSITION
1. Inner sleeve not flush with outer circumference

Remove the damper at the end of drive shaft and replace it with a NEW one.

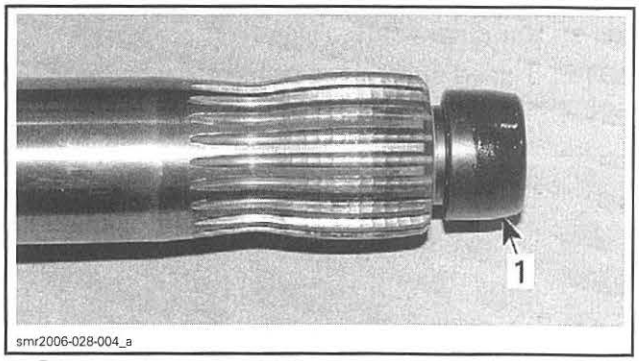

1. Damper

Install the PTO SUPPORT TOOL (P/N 529 035 842) on PTO seal assembly.

Apply a thin coat of XPS SYNTHETIC GREASE (P/N 293 550 010) on the floating ring O-rings. Do not get grease on floating ring contact surface.

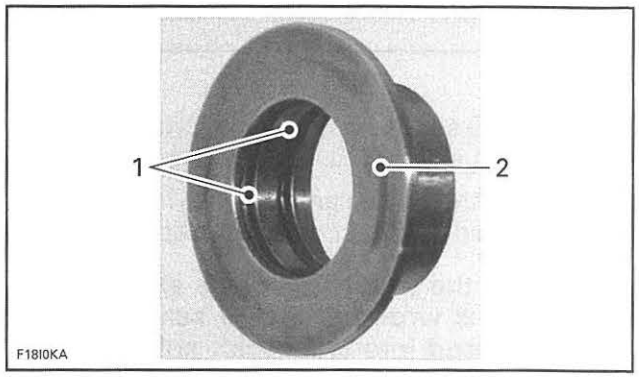

1. XP-S synthetic grease on O-rings
2. No lubrication on contact surface

Slide drive shaft far enough to install floating ring.

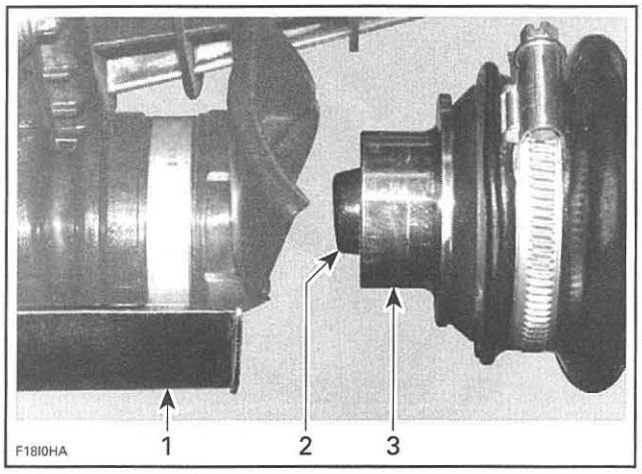

1. *PTO seal support*
2. *Drive shaft end*
3. *Insert floating ring on shaft end*

Continue pushing drive shaft towards engine carefully guiding it in the PTO seal then in crankshaft splines. It may be necessary to move PTO seal assembly up and down to position it in the same axis as the drive shaft.

NOTE: If drive shaft does not enter into the PTO seal, check engine alignment.

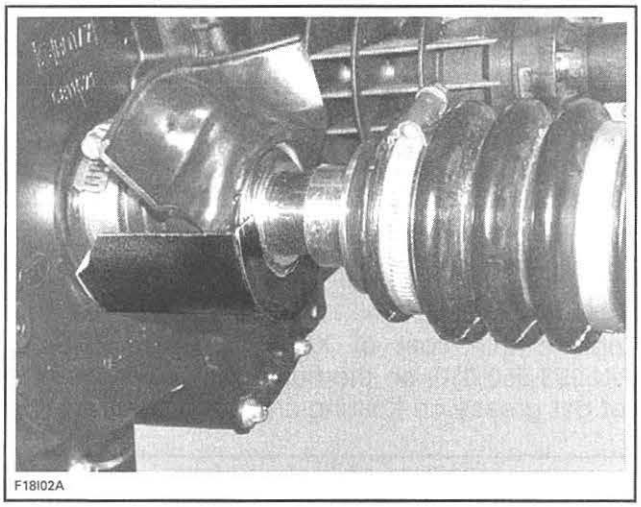

TYPICAL

Maintain PTO seal assembly in the proper position and tap shaft end until it bottoms against engine.

At this time, the telltale groove MUST NOT be visible. This validates the correct position.

NOTICE If the telltale groove is exposed, the installation is wrong and PTO seal assembly will be pressed into crankshaft splines which could rub a hole in seal thus creating an oil leak.

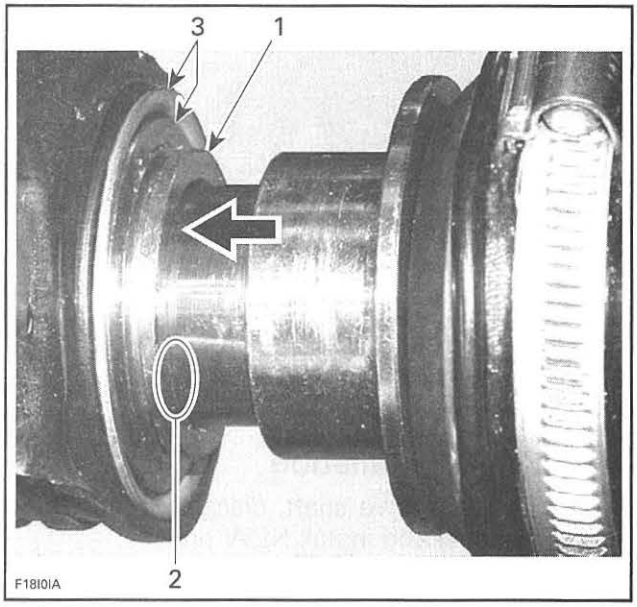

CORRECT INSTALLATION
1. *PTO seal assembly*
2. *Shaft pushed in, hiding telltale groove*
3. *Inner sleeve flush with outer circumference*

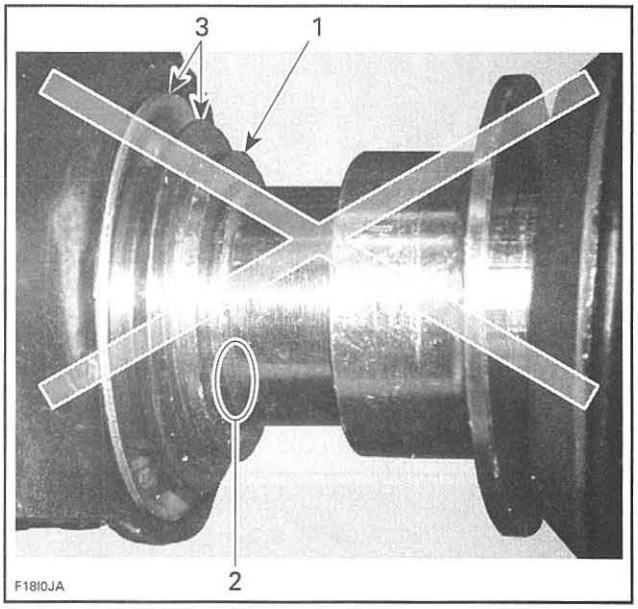

IMPROPER INSTALLATION
1. *PTO seal assembly*
2. *Telltale groove visible*
3. *Inner sleeve NOT flush with outer circumference*

Temporarily install the jet pump.

Install a new circlip using the following procedure and tools.

REQUIRED TOOL	
130 and 155 engines	FLOATING RING TOOL (TYPE I) (P/N 529 035 841)
215 and 260 engines	FLOATING RING TOOL (TYPE II) (P/N 529 036 116)

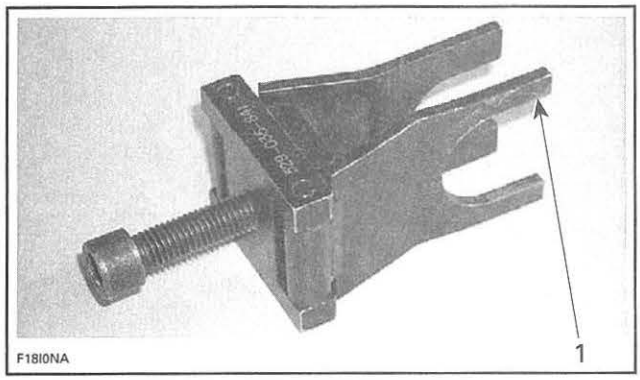

TYPICAL
1. Largest opening on through-hull fitting side

NOTE: Ensure PTO seal support is still in place.

Push floating ring rearwards and install a NEW circlip.

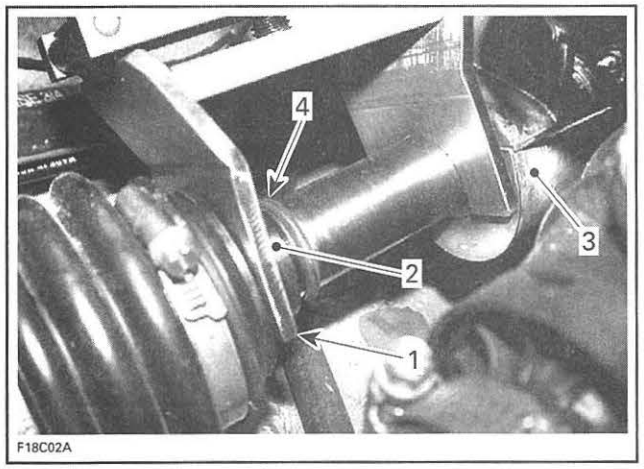

TYPICAL
1. Largest opening
2. Floating ring
3. PTO seal support tool
4. Install circlip

Remove floating ring tool and PTO seal support.

NOTE: Pulling drive shaft boot rearward will ease removal of PTO support tool.

Ensure everything is properly positioned:
- Telltale groove is not visible
- Inner sleeve is flush with outer circumference of PTO seal assembly
- Circlip is not exposed.

If telltale groove is visible, pull PTO seal assembly rearwards to fully extend it.

If inner sleeve is not flush, gently tap it until it is flush.

Reposition rubber protector.

Reconnect EGTS sensor if applicable.

Permanently install jet pump. Refer to *JET PUMP* section.

Check engine oil level. Refill as necessary.

Test watercraft then ensure there is:
- No oil leak in PTO seal area
- No water intrusion by the thru-hull fitting area.

DRIVE SHAFT BOOT

Drive Shaft Boot Inspection

Inspect the condition of boot. If there is any damage or evidence of wear, replace it.

Drive Shaft Boot Removal

Remove drive shaft. Refer to *DRIVE SHAFT* in this subsection.

Loosen gear clamp holding boot, then carefully pull boot and carbon ring from hull insert.

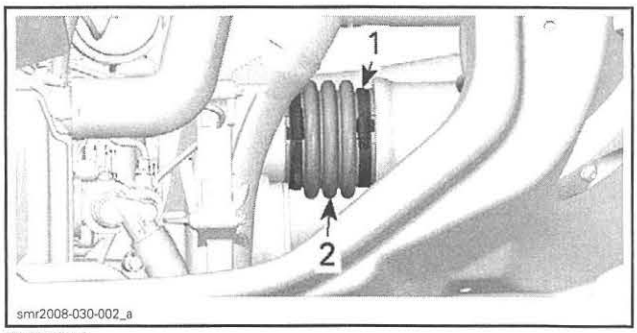

TYPICAL
1. Loosen this clamp
2. Drive shaft boot

Drive Shaft Boot Installation

The installation is the reverse of the removal procedure.

CARBON RING

Carbon Ring Removal

Remove *DRIVE SHAFT BOOT*. See procedure in this section.

Loosen gear clamp then pull carbon ring from drive shaft boot.

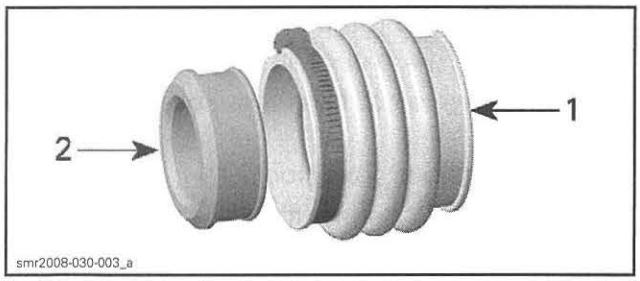

1. Drive shaft boot
2. Carbon ring

Carbon Ring Installation

The installation is the reverse of the removal procedure.

MANUAL SUSPENSION (S)

SERVICE TOOLS

Description	Part Number	Page
SUPERTANIUM DRILL BIT 3/16"	529 031 800	529

FRONT SUSPENSION ARM

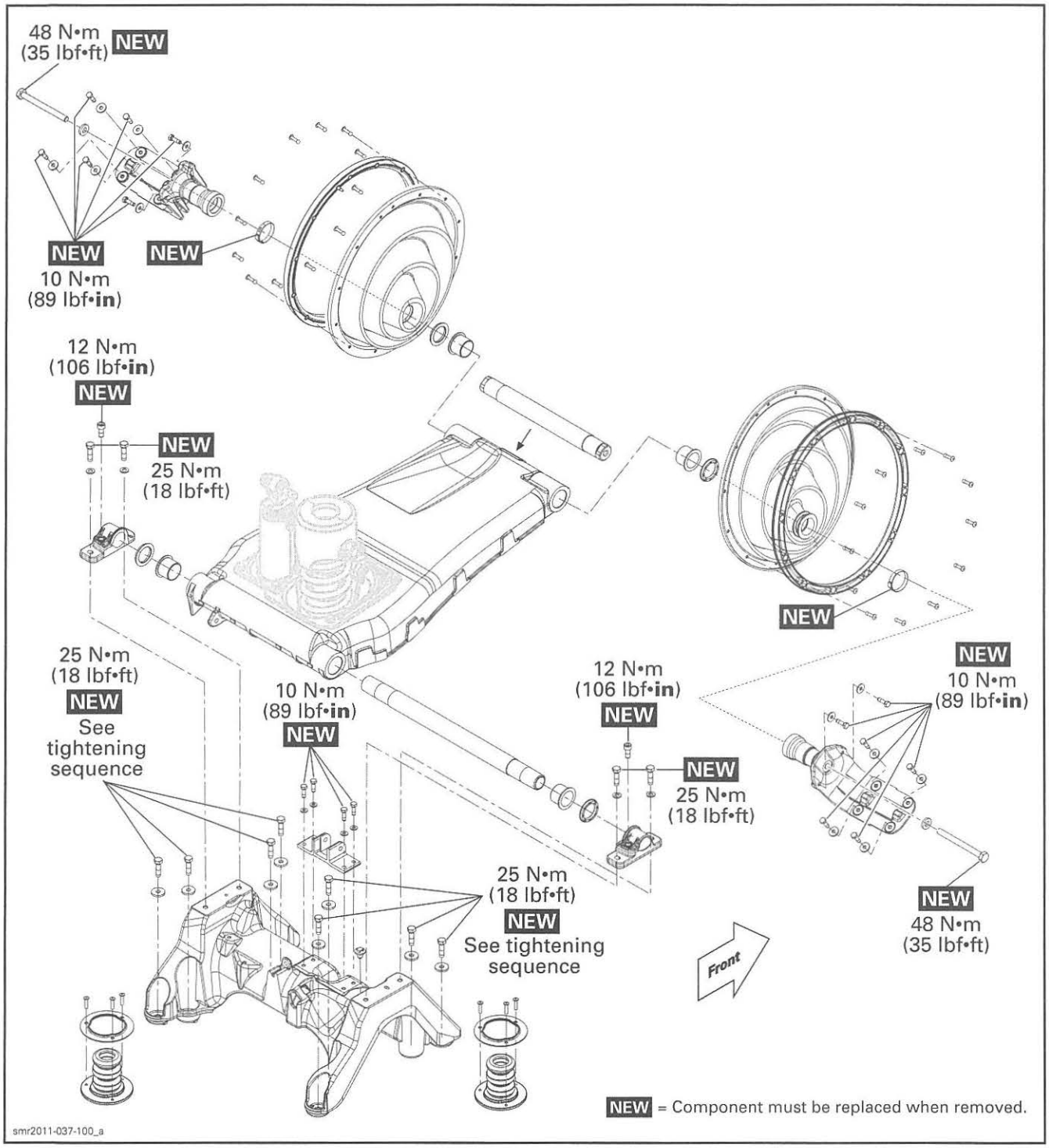

SHOCK ABSORBER

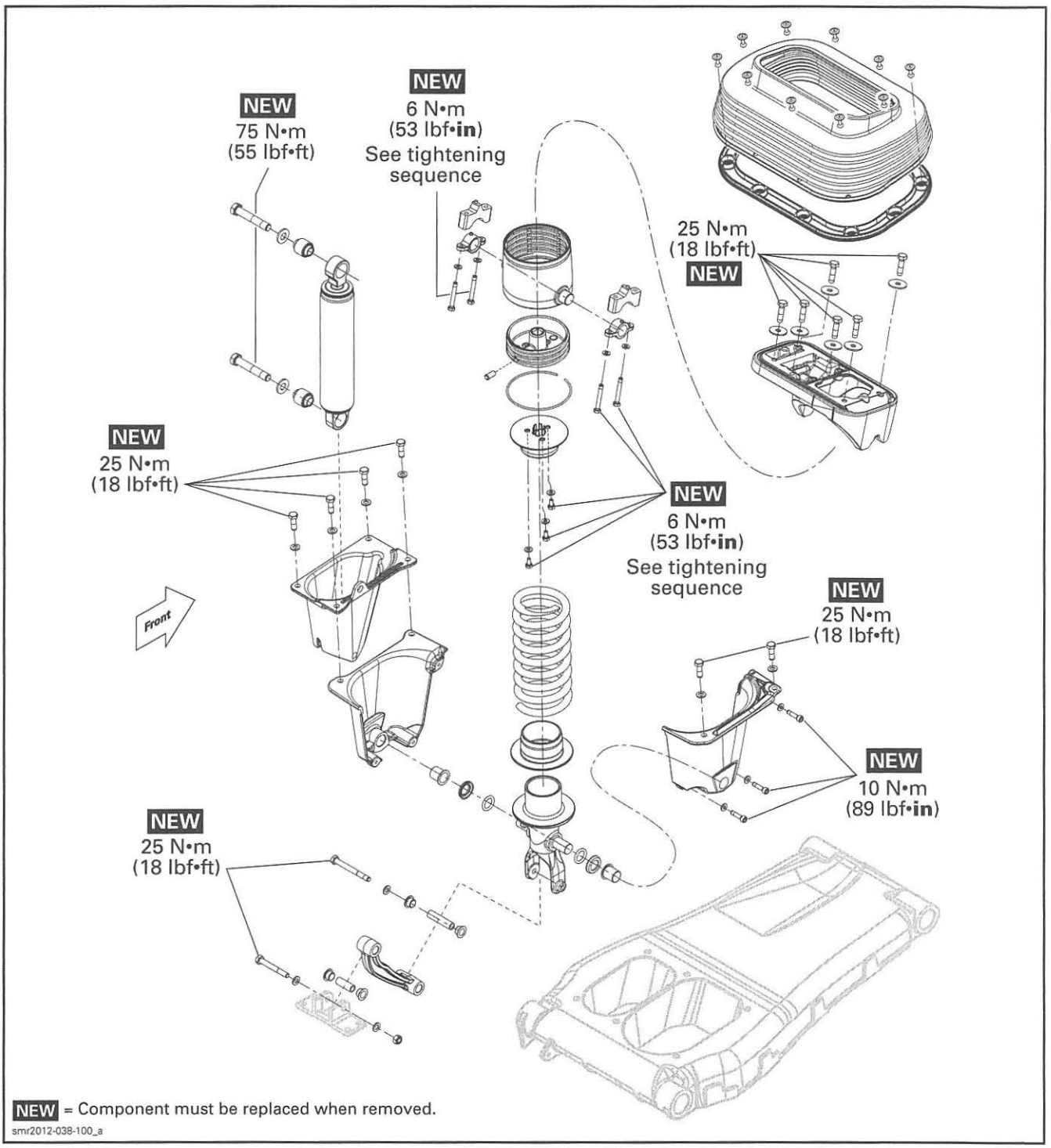

REAR SUSPENSION ARM

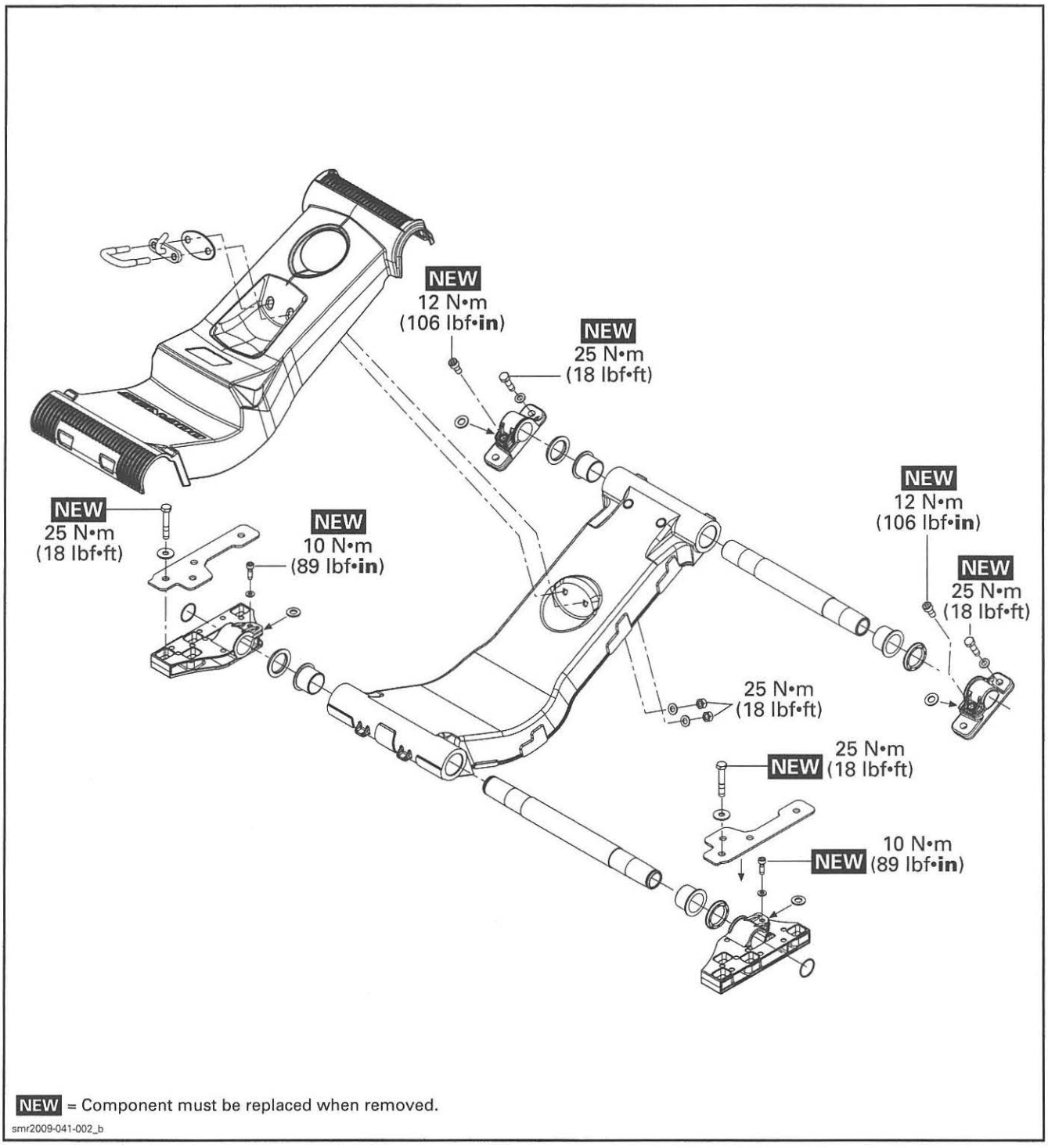

NEW = Component must be replaced when removed.

smr2009-041-002_b

GENERAL

SYSTEM DESCRIPTION

The Suspension (S) allows the moving deck to move independently from the fixed deck, isolating rider and passenger from the impact of rough water.

The moving deck may be adjusted mechanically to absorb (dampen) water shocks according to the driver riding style and water conditions.

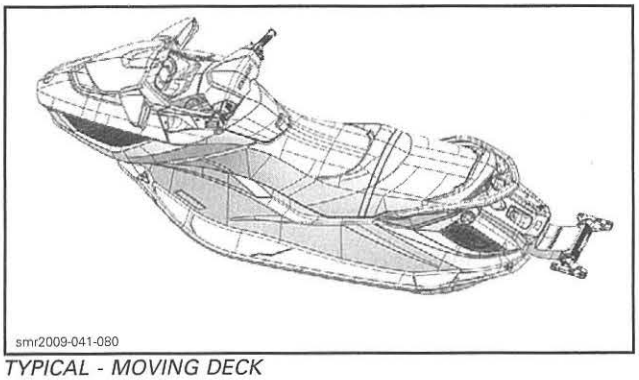

TYPICAL - MOVING DECK

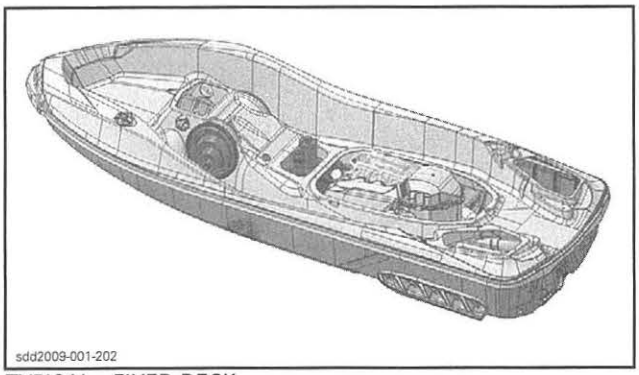

TYPICAL - FIXED DECK

Spring Preload Adjustment

The spring preload can be easily adjusted using a 1/2" drive ratchet wrench with an extension.

The spring preload adjuster is located under the seat.

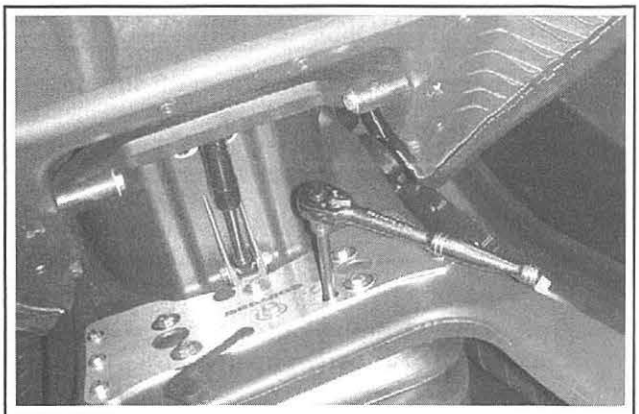

SPRING PRELOAD ADJUSTMENT

RIDERS TOTAL WEIGHT (KG/LB)	NBR OF CLICKS ON SPRING ADJUSTER (CLOCKWISE*)
68 kg (150 lb)	0
79 kg (175 lb)	2
90 kg (200 lb)	4
102 kg (225 lb)	6
113 kg (250 lb)	8
125 kg (275 lb)	10
136 kg (300 lb)	12
147 kg (325 lb)	14
159 kg (350 lb)	16
170 kg (375 lb)	18
* 0 is set at fully unscrewed position (counterclockwise).	

TROUBLESHOOTING

DIAGNOSTIC GUIDELINES

The following is provided to help in diagnosing the probable source of troubles. It is a guideline and it should not be assumed to list all possible problems.

SUSPENSION MOVES ERRATICALLY

1. Defective shock absorber.
   - *Replace the shock absorber.*
2. Broken spring.
   - *Replace spring.*

SUSPENSION NOISE (DURING A TURN)

1. Front or rear suspension arm shaft supports position.
   - *Supports must be flushed against both ends of shaft. Reposition shaft in its supports.*
2. Worn arm shaft bushings.
   - *Check front and rear arm shaft bushings condition and replace as required.*
3. Snap rings on both sides of the rear lower arm shaft are not properly positioned.
   - *Reposition shaft in its supports. Refer to SUSPENSION ARM SHAFTS.*

SUSPENSION NOISE (FRONT OF SEAT)

1. Holder retaining screws are loose.
   - *Tighten shock absorber holder screws to recommended torque.*
2. Shock absorber screws are loose.
   - *Tighten shock absorber screws to recommended torque.*

SUSPENSION BOTTOMS HARD

1. Spring out of specification or broken.
   - *Replace spring.*
2. Shock absorber is damaged.
   - *Check shock absorber resistance. Replace shock absorber.*
3. Bump stops damaged or worn.
   - *Replace both bump stops.*

PROCEDURES

SHOCK ABSORBER

Shock Absorber Location

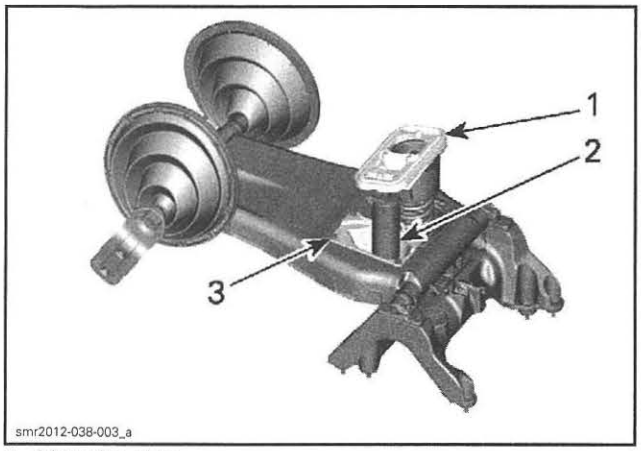

1. *Mounting plate*
2. *Shock absorber*
3. *Shock holder*

Shock Absorber Removal

1. Remove moving deck. Refer to *BODY* subsection.
2. Remove shock absorber upper bolt.

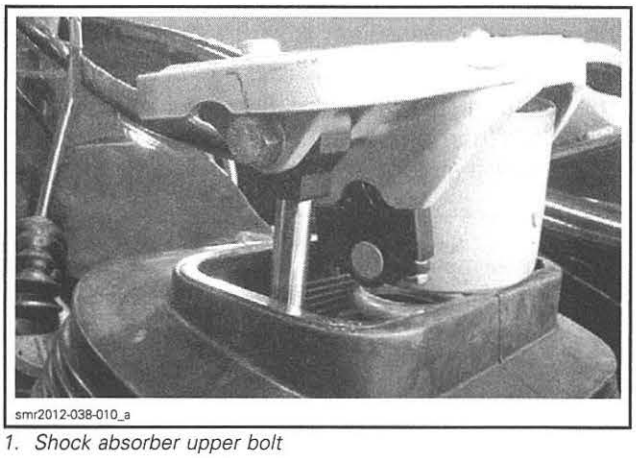

1. *Shock absorber upper bolt*

3. Remove mounting plate by pulling it upwards.

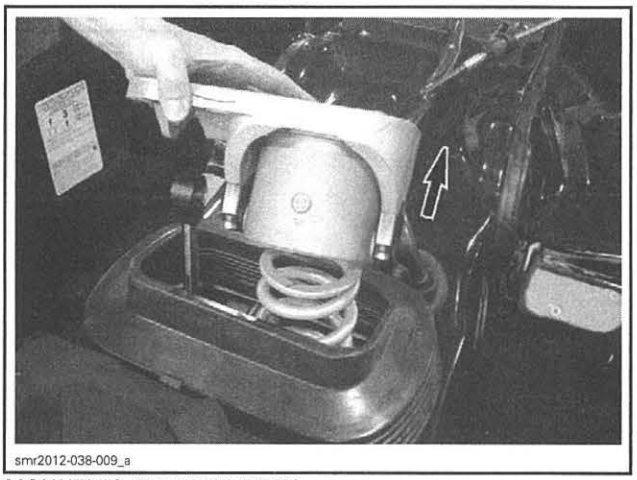

MOUNTING PLATE REMOVAL

4. Remove spring and lower spring bushing.

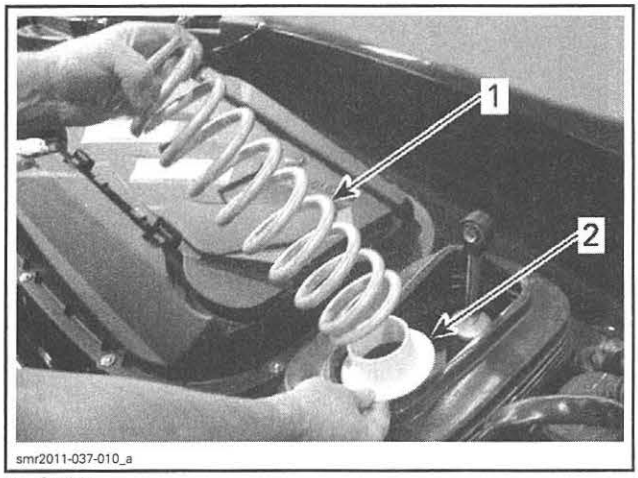

1. *Spring*
2. *Lower spring bushing*

5. Remove shock holder retaining screws. Discard screws, keep washers

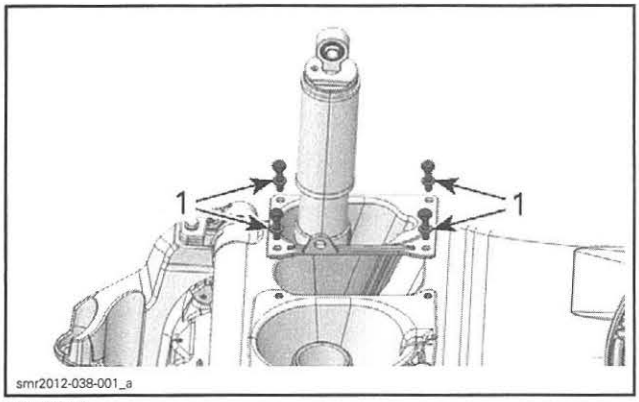

TYPICAL
1. *Shock holder retaining screws and washers*

6. Remove shock absorber and shock holder.

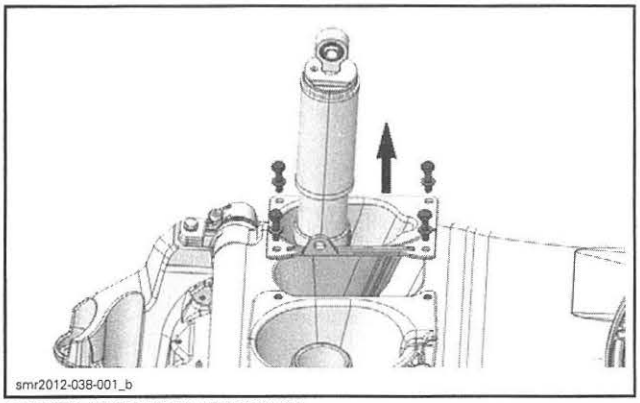

SHOCK ABSORBER REMOVAL

7. Remove shock holder from shock absorber.

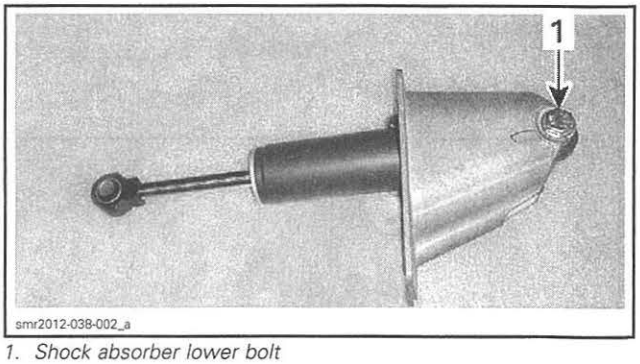

1. *Shock absorber lower bolt*

Shock Absorber Inspection

NOTE: Because of gas pressure, strong resistance is felt when compressing shock.

To inspect shock operation, or if suspecting an internal leak between oil chamber and gas chamber, check shock as follows:

1. Grab the shock absorber body firmly and press the rod end against a firm surface.
   - 1.1 Verify the compression stroke when the rod is fully extended.
   - 1.2 Make sure that shock absorber rod can be completely inserted in the shock body.
2. The shock should extend unassisted. Rod must come out at a steady speed.

If any problem is detected, replace the shock absorber.

Shock Absorber Installation

The installation is the reverse of the removal procedure. However, pay attention to the following.

Secure shock absorber using **NEW** bolts.

Tighten shock absorber bolts to specification.

TORQUE	
Shock absorber bolt	75 N•m (55 lbf•ft)

Install **NEW** shock holder screws.

Tighten shock holder screws to specification.

TORQUE	
Shock holder screw	25 N•m (18 lbf•ft)

SPRING

Spring Location

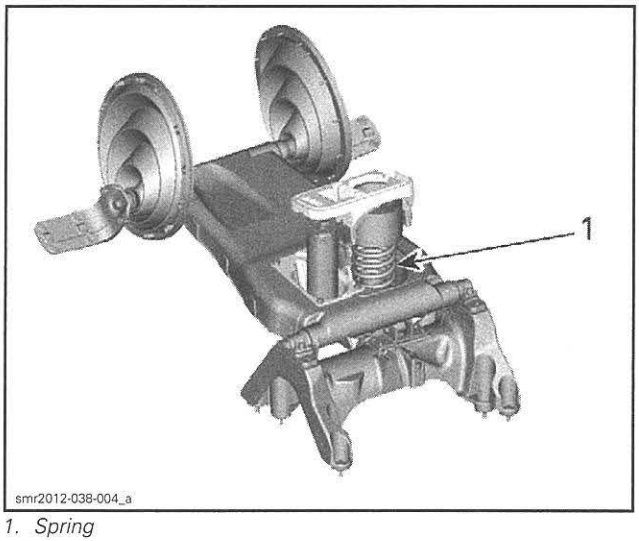

1. Spring

Spring Removal

1. Remove moving deck. Refer to *BODY* subsection.
2. Remove shock holder from its location. Refer to *SHOCK ABSORBER* in this subsection.

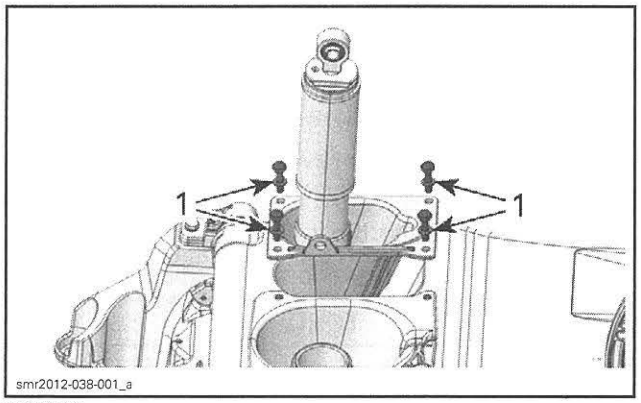

TYPICAL
1. Shock holder retaining screws and washers

3. Move shock holder aside.
4. Remove spring holder retaining screws.

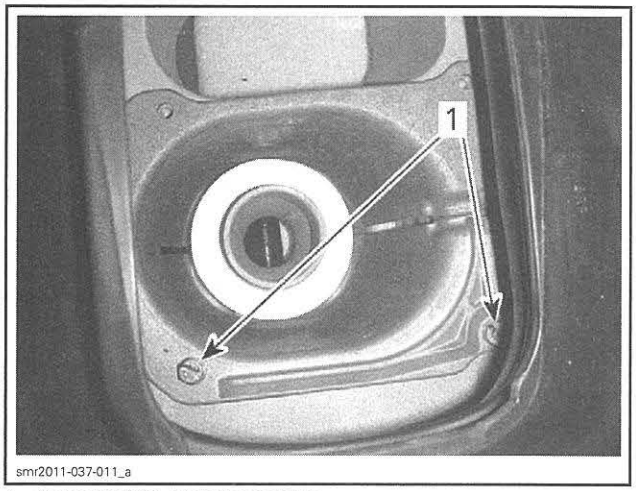

1. Spring holder retaining screws

5. Remove screw securing spring holder to link arm.

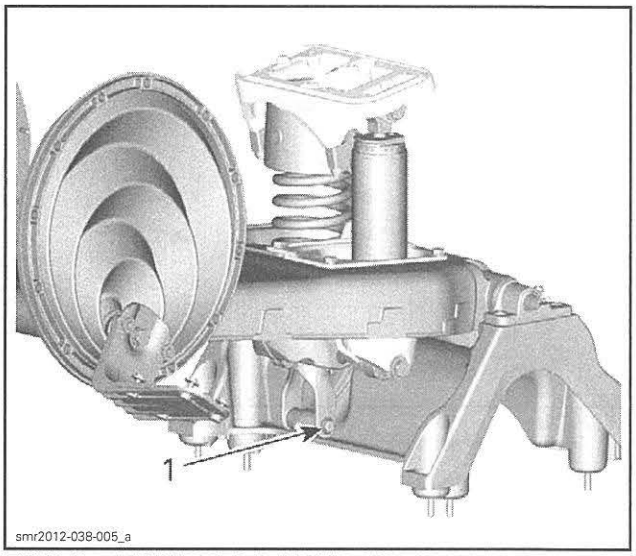

TYPICAL - SOME PARTS REMOVED FOR CLARITY
1. Screw securing spring holder to link arm

6. Remove spring holder.

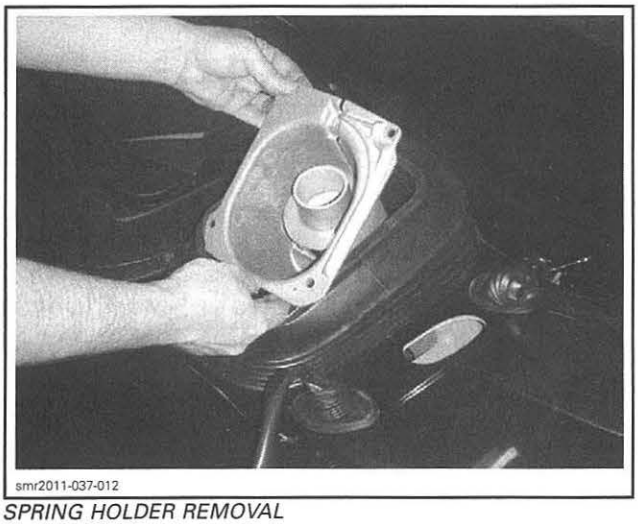

SPRING HOLDER REMOVAL

Spring Inspection

Inspect spring and replace if one of the following damage is detected:

- Crack in the paint
- Rust
- Other visible damages.

NOTE: If rust is limited to a 1/4 of the first coil, the spring should not be replaced.

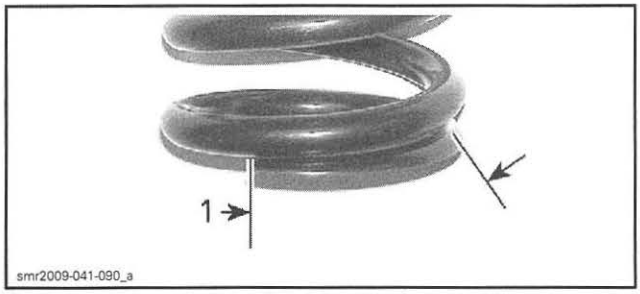

1. Zone where presence of rust is normal

Check the curve line of spring.

SPRING SHAPE	
Maximum	7 mm (9/32 in)

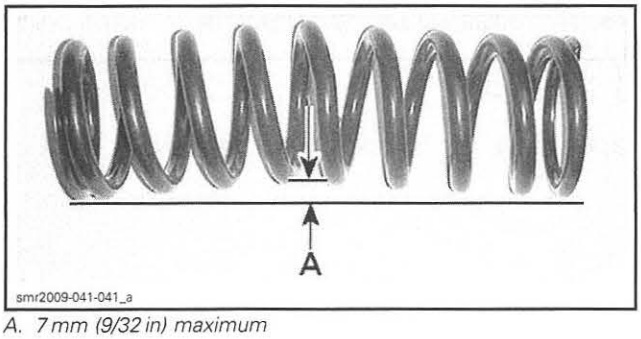

A. 7 mm (9/32 in) maximum

Replace spring if out of specification.

Spring Installation

The installation is the reverse of the removal procedure. However, pay attention to the following.

Secure shock absorber using **NEW** bolts.

Tighten shock absorber bolts to specification.

TORQUE	
Shock absorber bolt	75 N•m (55 lbf•ft)

Install **NEW** shock holder screws and spring holder screws.

Tighten shock and spring holder screws to specification.

TORQUE	
Shock holder screw	25 N•m (18 lbf•ft)
Spring holder screw	25 N•m (18 lbf•ft)

If spring supports were disassembled, pay attention to the following.

Install **NEW** upper spring support screws.

Tighten upper spring support screws to specification as per the following sequence.

TORQUE	
Upper spring support screw	6 N•m (53 lbf•**in**)

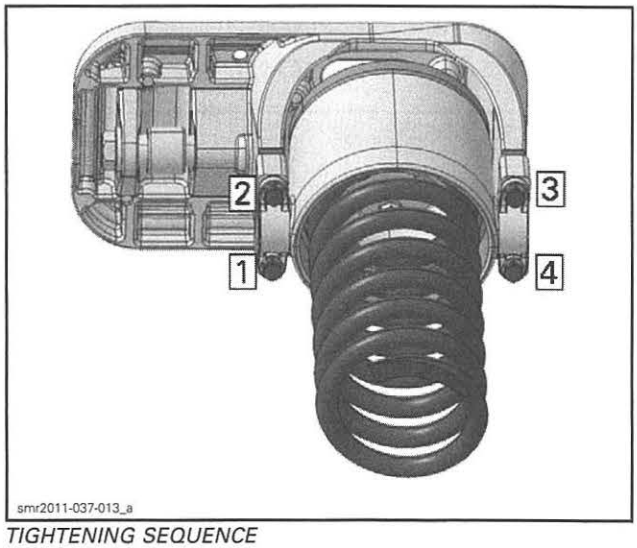

TIGHTENING SEQUENCE

Tighten upper wear ring retaining screws to specification as per the following sequence.

TORQUE	
Upper wear ring retaining screw	6 N•m (53 lbf•**in**)

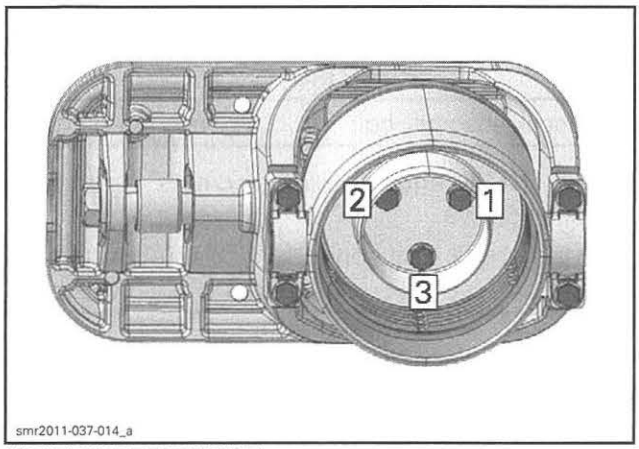

TIGHTENING SEQUENCE

LINK ARM

Link Arm Access

Refer to *BODY* subsection and remove:
- Moving deck
- Deck extension.

Link Arm Removal

1. Remove spring holder. Refer to *SPRING REMOVAL* in this subsection.
2. Remove link arm lower retaining bolt.

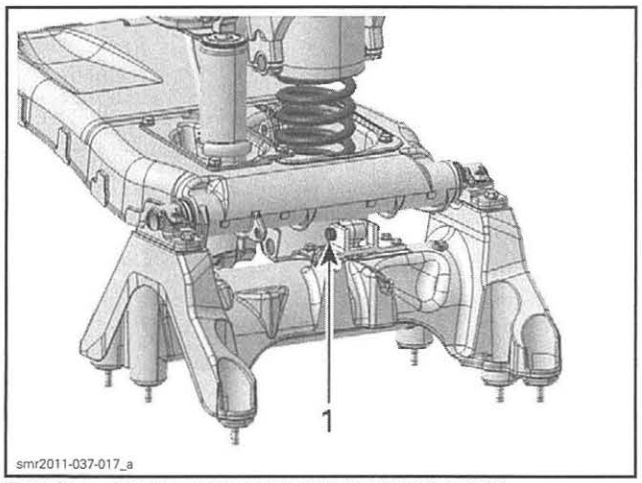

TYPICAL - SOME PARTS REMOVED FOR CLARITY
1. Link arm lower retaining bolt

Link Arm Installation

The installation is the reverse of the removal procedure. However, pay attention to the following.

Secure link arm using NEW bolts.

Tighten link arm bolts to specification.

TORQUE	
Link arm bolt	25 N•m (18 lbf•ft)

LATERAL SUPPORT

Lateral Support Location

The lateral supports are located on both side of the fixed deck to support the moving deck.

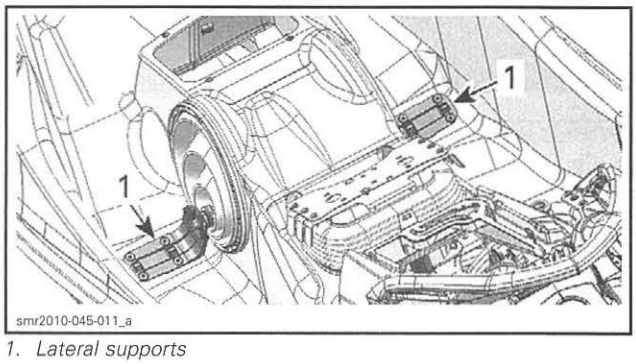

1. Lateral supports

Lateral Support Removal

NOTE: The following instruction can be used for RH or LH support.

1. Remove the moving deck. Refer to *BODY* subsection.
2. Cut the Oetiker clamp retaining lateral bellows to lateral support.

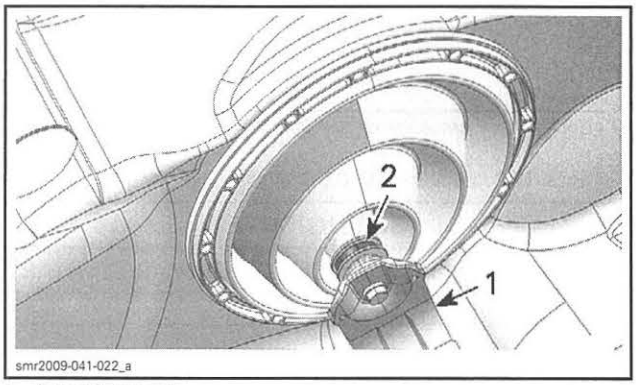

1. Lateral support
2. Oetiker clamp

3. Remove the lateral support screw.

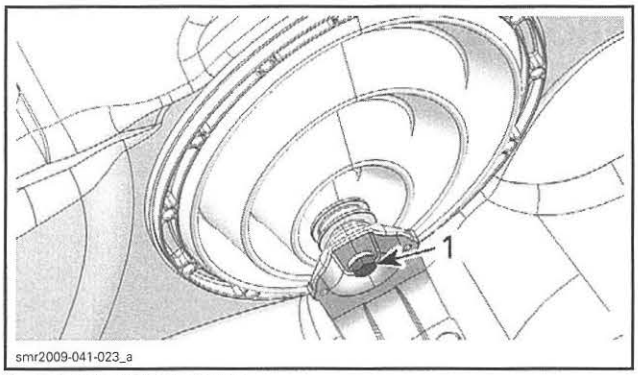

1. Lateral support screw

4. Remove lateral support from lateral bellows.

Lateral Support Installation

The installation is the reverse of the removal procedure. However, pay attention to the following.

Apply soapy water solution on bellows opening and insert the lateral support.

Index lateral supports with the front suspension shaft ends. Lateral supports can be inserted in one position only.

Install **new** lateral support screw.

Tighten lateral support screw to specification.

TORQUE	
Lateral support screw	48 N•m (35 lbf•ft)

Install a **new** Oetiker clamp. Position the ear of clamp rearwards.

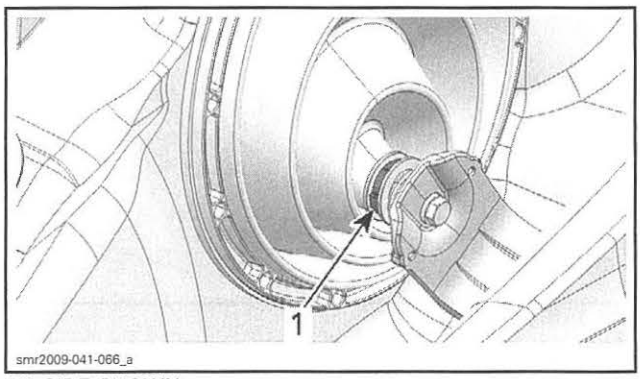

RH SIDE SHOWN
1. Ear of clamp rearwards

LATERAL BELLOWS

Lateral Bellows Location

The lateral bellows are located on each side of the fixed deck.

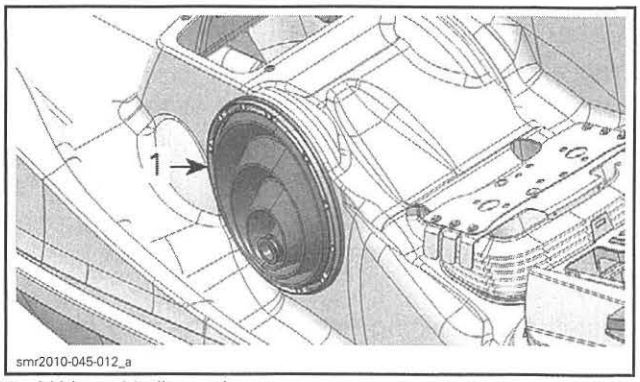

1. LH lateral bellows shown

Lateral Bellows Removal

1. Remove lateral support screw.

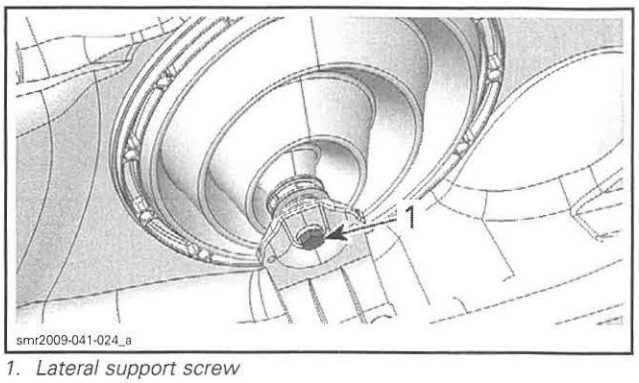

1. Lateral support screw

2. Detach lateral support from suspension shaft.
3. Using the SUPERTANIUM DRILL BIT 3/16" (P/N 529 031 800), remove all rivets (12) securing the lateral bellows ring to body.

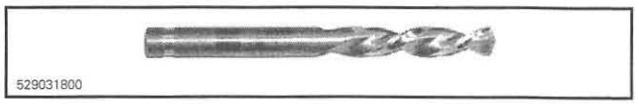

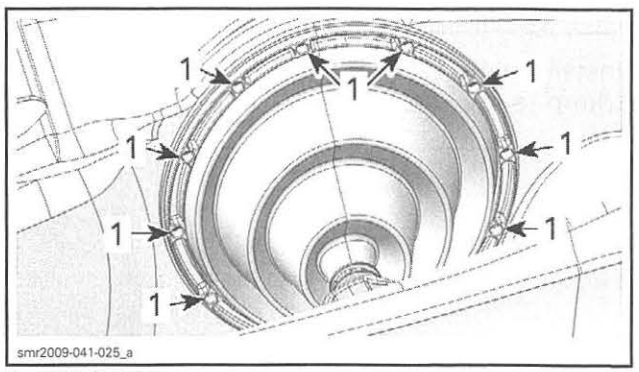

1. Rivet location

4. Remove lateral ring.
5. Cut Oetiker clamp securing bellows to lateral support.
6. Separate lateral support from bellows.

Lateral Bellows Installation

The installation is the reverse of the removal procedure. However, pay attention to the following.

Apply soapy water solution on bellows opening and insert the lateral support.

Index suspension shaft with the lateral support. The lateral support can be inserted in one position only.

Install the retaining ring. Align the ring pin with holes in bellows and body.

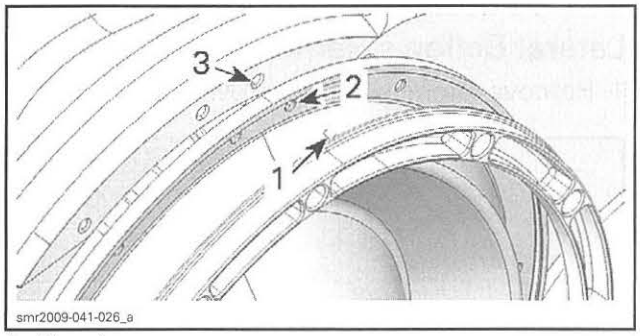

1. *Ring pin*
2. *Bellows alignment hole*
3. *Body hole*

Install new rivets. If the head of rivet tool cannot be inserted in ring opening, use the sleeve (P/N 707 000 181) to offset the rivet tool and well lean the rivet head against ring.

Index lateral supports with the front suspension shaft ends. Lateral supports can be inserted in one position only.

Install **new** lateral support screw.

Tighten lateral support screw to specification.

TORQUE	
Lateral support screw	48 N•m (35 lbf•ft)

Install a new Oetiker clamp. Position the ear of clamp rearwards.

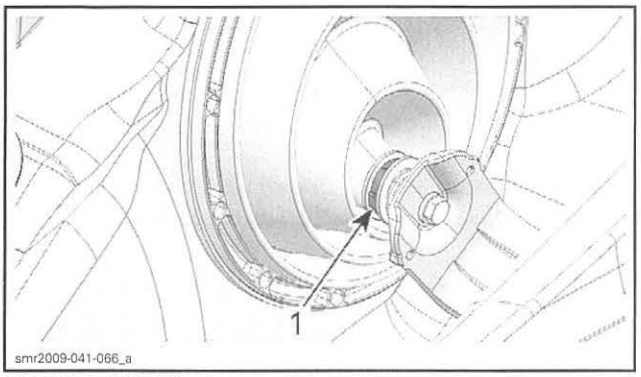

RH SIDE SHOWN
1. *Ear of clamp rearwards*

FRONT SUSPENSION ARM

Front Suspension Arm Location

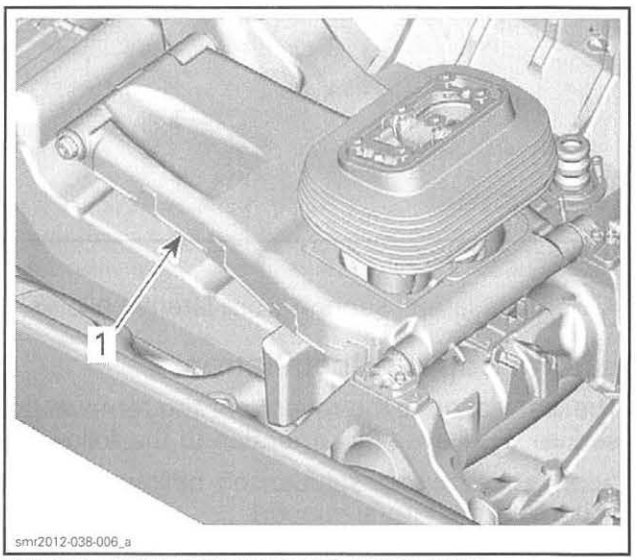

TYPICAL - FIXED DECK REMOVED FOR CLARITY
1. *Front suspension arm*

Front Suspension Arm Removal

1. Remove the moving deck. Refer to *BODY* subsection.
2. Remove the engine. Refer to *ENGINE REMOVAL AND INSTALLATION* subsection.
3. Remove both lateral support screws.

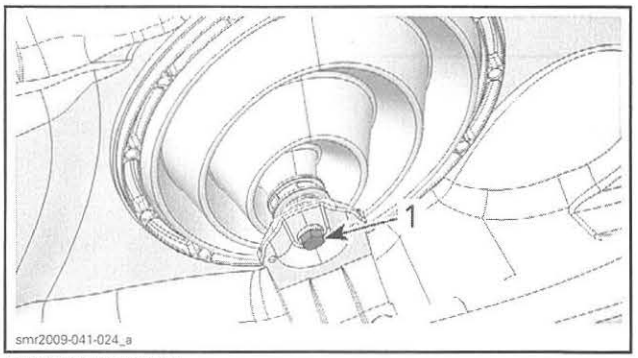

RH SIDE SHOWN
1. *Lateral support screw*

4. Detach lateral supports from suspension arm shaft.
5. Remove screws securing both shaft supports to suspension base.

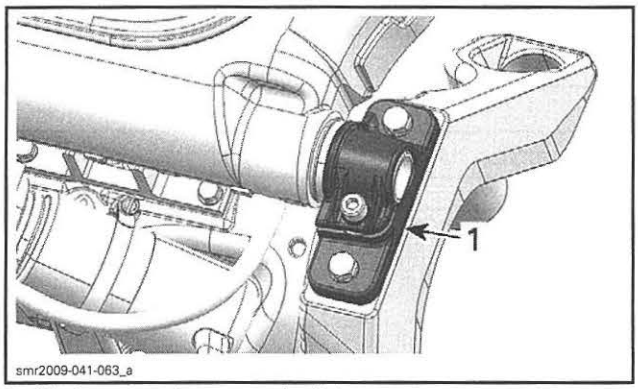

1. Shaft support (one on each side)

6. Move front suspension arm rearward to remove it.

Front Suspension Arm Installation

The installation is the reverse of the removal procedure. However, pay attention to the following.

If a shaft support has been loosened from the suspension arm shaft, see *SUSPENSION ARM SHAFTS* for proper installation procedure.

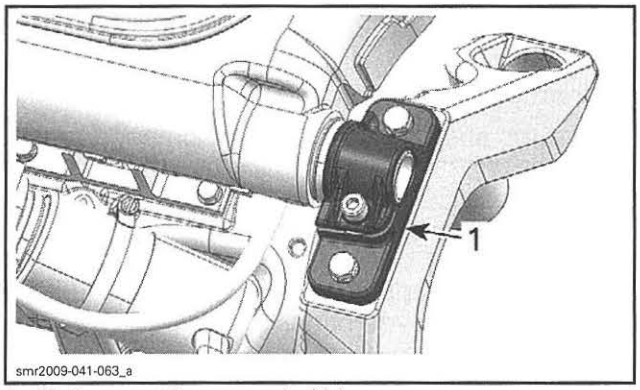

1. Shaft support (one on each side)

Install **NEW** shaft support screws.

Tighten shaft support screws to specification.

TORQUE	
Shaft support screws	25 N•m (18 lbf•ft)

SUSPENSION BASE

Suspension Base Location

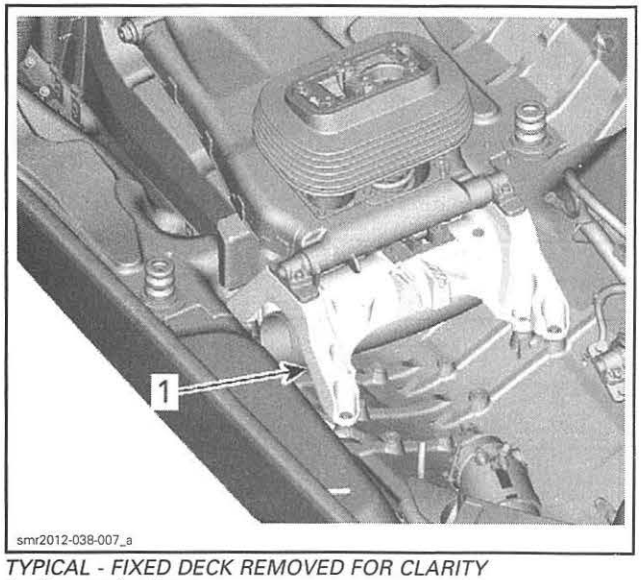

TYPICAL - FIXED DECK REMOVED FOR CLARITY
1. Suspension base

Suspension Base Removal

1. Refer to the appropriate procedures and remove the following parts:
   - Moving deck
   - Engine
   - Shock absorber and spring.
2. Using a marker, **trace the shape of suspension base at the bottom of the hull** to reposition it at the same place.
3. Remove screws securing both shaft supports to suspension base.

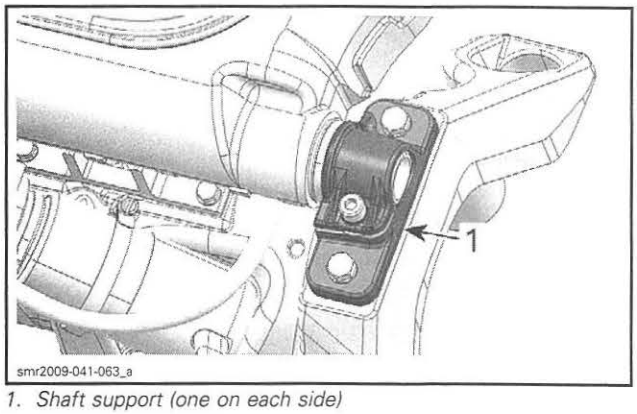

1. Shaft support (one on each side)

4. Remove and discard suspension base screws.

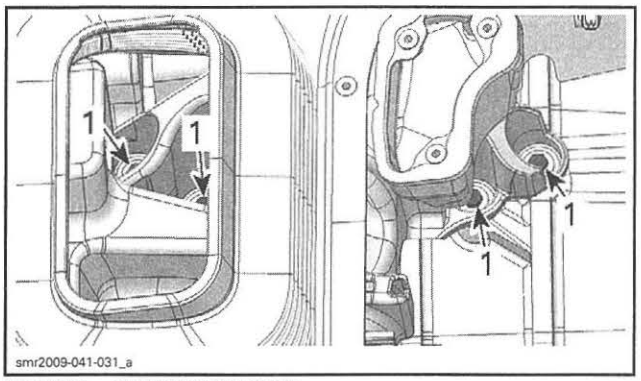

TYPICAL - STARBOARD SIDE
1. Suspension base screws

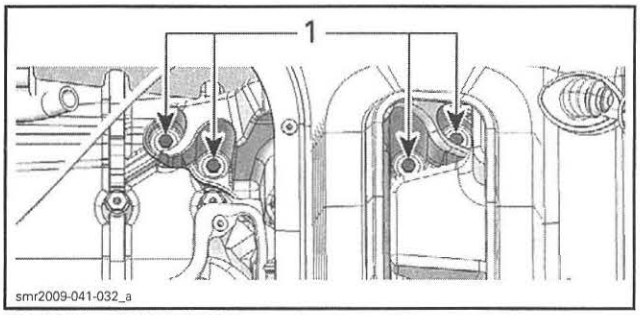

TYPICAL - PORT SIDE
1. Suspension base screws

5. Remove suspension base with the rear vent duct.

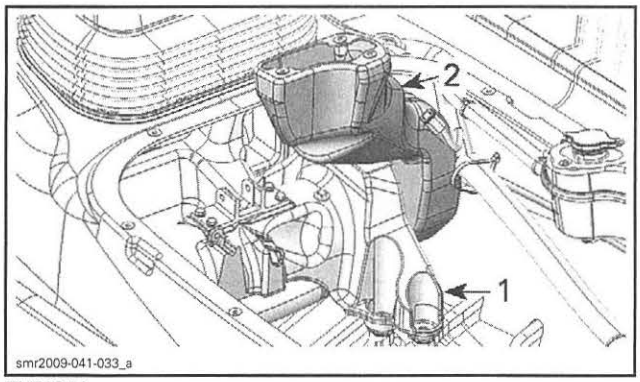

TYPICAL
1. Suspension base
2. Rear vent duct

Suspension Base Installation

The installation is the reverse of the removal procedure. However, pay attention to the following.

1. Install the suspension base.
   1.1 Position the base in accordance with the reference marks previously drawn at the bottom of the hull.

   NOTE: If no marks are available, see *SUSPENSION BASE INSTALLATION WITHOUT REFERENCE MARKS*.

   1.2 Install NEW suspension base screws.
   1.3 Tighten suspension base screws to specification as per the following sequence.

TORQUE	
Suspension base screws	25 N•m (18 lbf•ft)

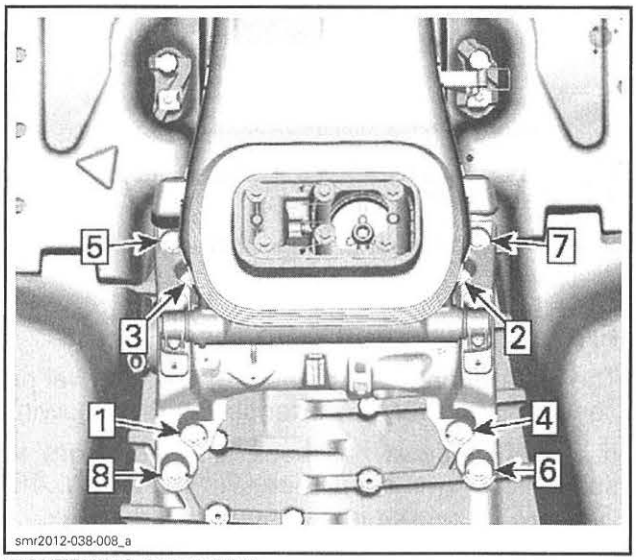

TIGHTENING SEQUENCE

2. Install NEW shaft support screws to secure front suspension arm.
3. Tighten shaft support screws to specification.

TORQUE	
Shaft support screws	25 N•m (18 lbf•ft)

4. Refer to the appropriate procedures and install all other removed parts.
   - Shock absorber and spring
   - Engine
   - Moving deck.

Suspension Base Installation without Reference Marks

1. Install the suspension base on watercraft using NEW screws. Do not tighten them yet.
2. Install NEW shaft support screws to secure front suspension arm.
3. Tighten shaft support screws to specification.

TORQUE	
Shaft support screws	25 N•m (18 lbf•ft)

4. Install lateral supports.
   4.1 Index lateral supports with the front suspension shaft ends. Lateral supports can be inserted in one position only.

4.2 Tighten lateral support screws to specification.

TORQUE	
Lateral support screws	48 N•m (35 lbf•ft)

5. Align suspension base on watercraft.

5.1 On both sides, measure the distance between the end of lateral support and fixed deck.

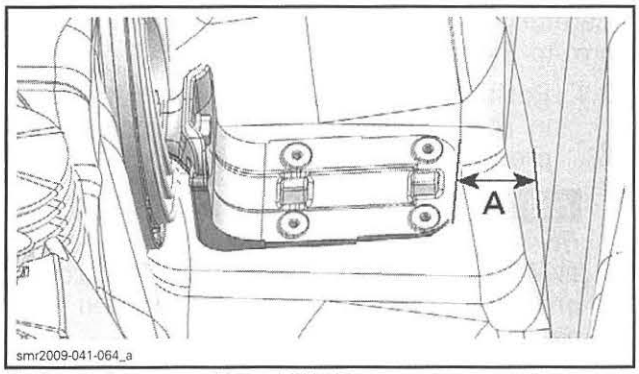

A. Same distance on LH and RH sides

5.2 If required, move suspension base until both distances are equal.

5.3 Tighten suspension base screws to specification as per the following sequence.

TORQUE	
Suspension base screws	25 N•m (18 lbf•ft)

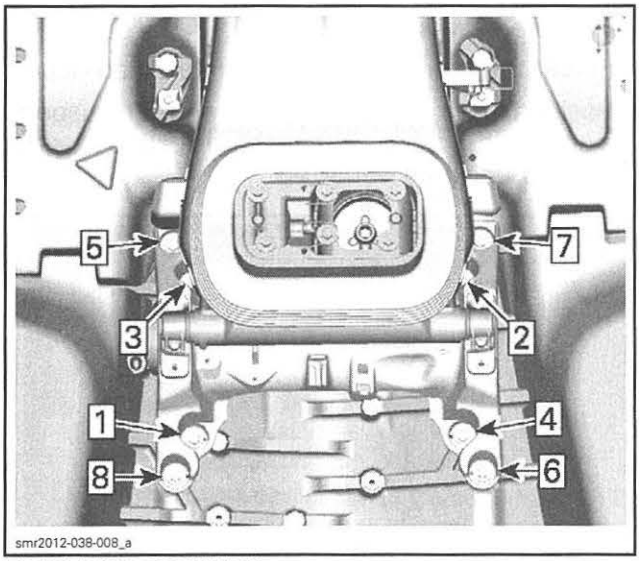

TIGHTENING SEQUENCE

6. Refer to the appropriate procedures and install all other removed parts.
   - Shock absorber and spring
   - Engine
   - Moving deck.

REAR SUSPENSION ARM

Rear Suspension Arm Location

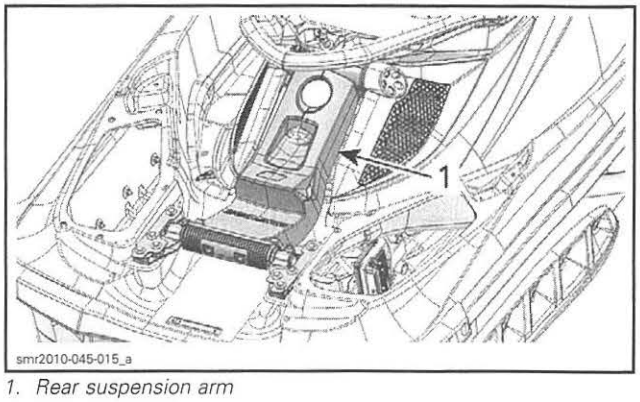

1. Rear suspension arm

Rear Suspension Arm Removal

1. Open the boarding platform.
2. Remove bolts securing both rear suspension arm covers.

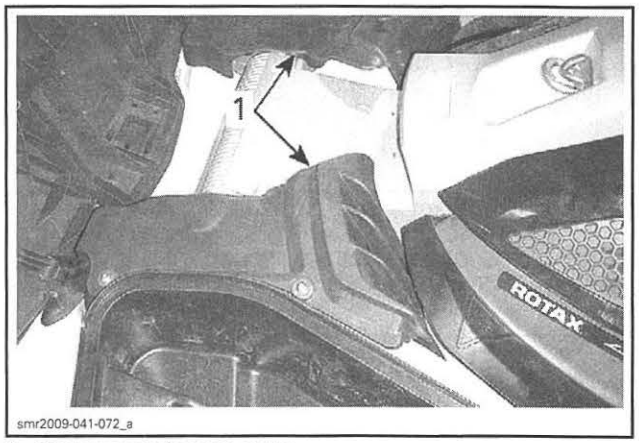

1. Rear suspension arm cover

3. Unclip and remove both lateral rear panels.

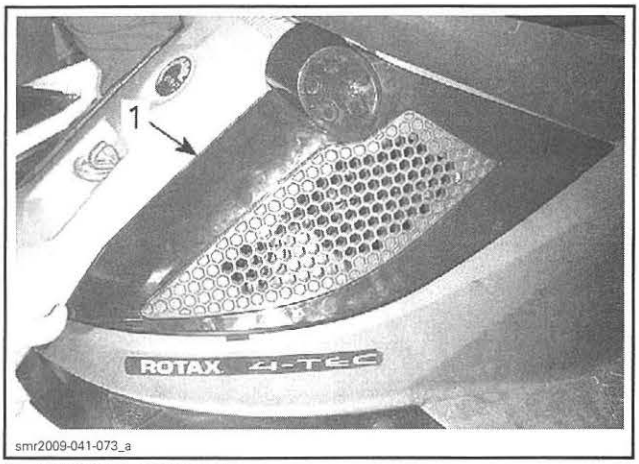

1. RH lateral rear panel

4. Mark position of rear suspension arm brackets for proper reinstallation.
5. Remove and discard screws securing rear suspension arm to fixed deck.

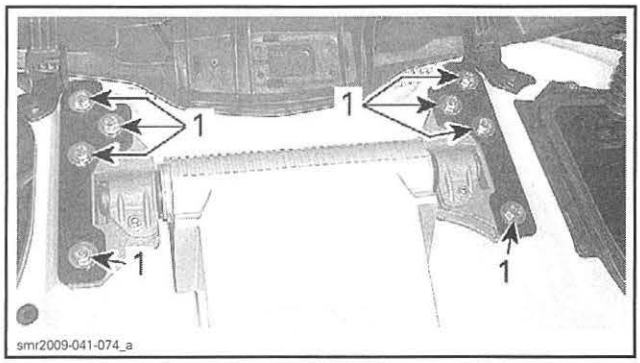

1. Rear suspension arm screws

6. Remove and discard screws securing the top of rear suspension arm.

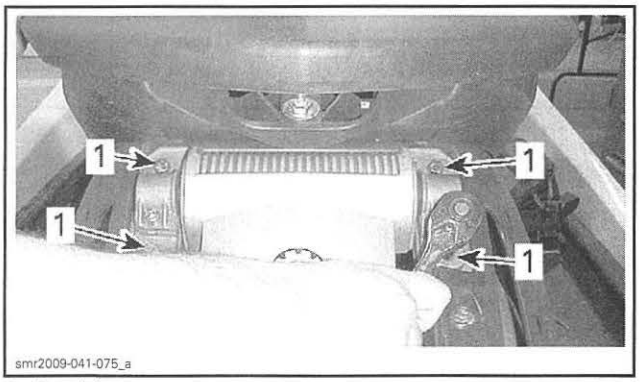

1. Retaining screws

7. Remove the rear suspension arm from watercraft.

Rear Suspension Arm Installation

1. Using NEW screws, install the top of rear suspension arm.

NOTE: If the upper arm shaft or one of its arm shaft support has been removed or loosened, refer to *SUSPENSION ARM SHAFTS* for proper installation procedure.

2. Tighten upper arm support screws to specification.

TORQUE	
Upper arm support screws	25 N•m (18 lbf•ft)

3. Carefully lower and secure the rear suspension arm to the fixed deck.
   3.1 Position the rear suspension arm brackets in accordance with the reference marks previously draw on fixed deck.

   NOTICE **If no mark was traced, refer to *REAR SUSPENSION ARM INSTALLATION WITHOUT REFERENCE MARKS* for proper procedure to install and align the rear suspension arm.**

   3.2 Install NEW screws to secure rear suspension arm brackets.
   3.3 Tighten rear suspension arm screws to specification.

TORQUE	
Rear suspension arm screws	25 N•m (18 lbf•ft)

Rear Suspension Arm Installation Without Reference Marks

1. Lower the rear suspension arm on fixed deck.
2. Position the square openings of rear suspension arm brackets so that the threaded inserts in fixed deck are centered.

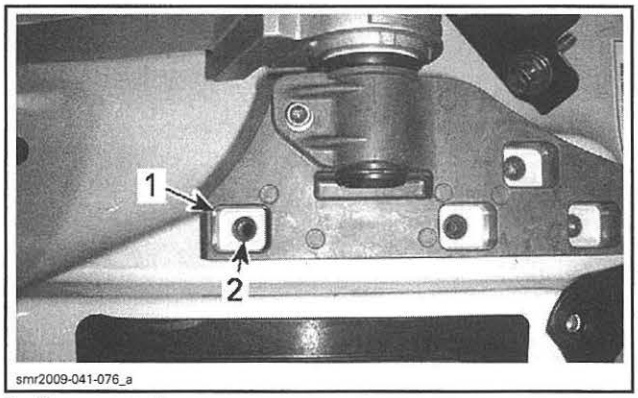

1. Square opening
2. Threaded insert

3. On each bracket, install the retaining plate and one screw.

4. Install a weight of 90 kg (200 lb) on vehicle to lower the moving deck.
5. Check moving deck position in comparison to fixed deck.
   5.1 Check the gap between moving deck wipers and fixed deck. It should be the same on both sides.
   5.2 Check front and rear gaps. Moving deck should be able to move without having contact with the fixed deck.
   5.3 Reposition rear suspension arm brackets on fixed deck until positioning of moving deck is satisfactory.
6. Secure the rear suspension arm to the fixed deck.
   6.1 Install **NEW** screws to secure rear suspension arm brackets.
   6.2 Remove and replace screws installed during alignment.
   6.3 Tighten rear suspension arm screws to specification.

TORQUE	
Rear suspension arm screws	25 N•m (18 lbf•ft)

SUSPENSION ARM SHAFTS

Removal of Front Suspension Arm Shaft

1. Remove the *FRONT SUSPENSION ARM*, see procedure in this subsection.
2. Remove and discard socket screws securing supports to shaft.
3. Separate arm shaft supports from arm shaft.

Installation of Front Suspension Arm Shaft

1. Insert shaft in the suspension arm.
2. Install a support on each end of shaft.
3. Secure the LH arm shaft support to suspension base using **NEW** support screws.

NOTE: Make sure to insert the support pin into suspension base hole.

4. Tighten the LH support screws to specification.

TORQUE	
Shaft support screws	25 N•m (18 lbf•ft)

5. Apply a force on the RH support to move it on the left side.

NOTICE **Make sure arm shaft is fully inserted, it must lean against the arm shaft support.**

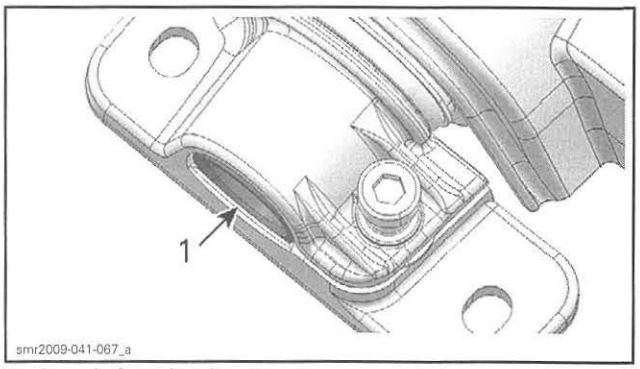

1. Arm shaft against its support

6. Install **NEW** support screws and tighten them to specification.

TORQUE	
Shaft support screws	25 N•m (18 lbf•ft)

7. Secure both supports to shaft using **NEW** socket screws.
8. Tighten shaft screws to specification.

TORQUE	
Shaft screws	12 N•m (106 lbf•**in**)

Removal of Rear Suspension Arm Upper Shaft

1. Unclip and remove both lateral rear panels.

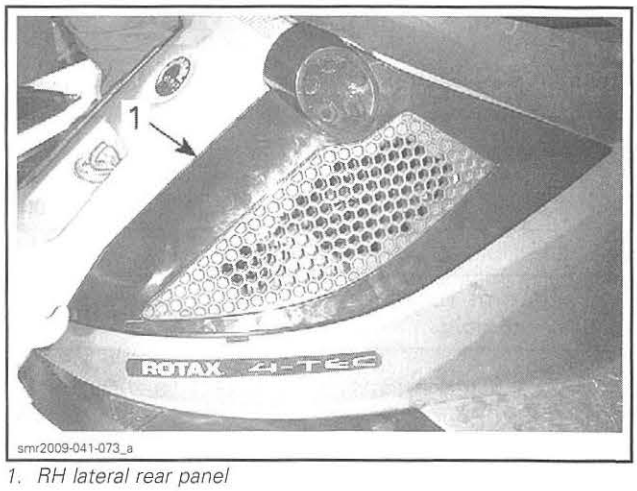

1. RH lateral rear panel

2. Remove arm shaft support screws.

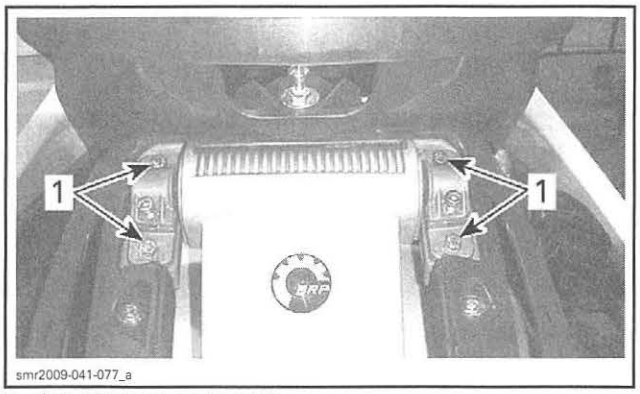

1. Arm shaft support screws

3. Remove and discard socket screws securing supports to arm shaft.
4. Separate arm shaft support from arm shaft.

Installation of Rear Suspension Arm Upper Shaft

1. Insert shaft in the rear arm.
2. Install a support on each end of shaft.
3. Secure the LH support to rear arm holder using NEW support screws.

NOTE: Make sure to insert the support pin into holder hole.

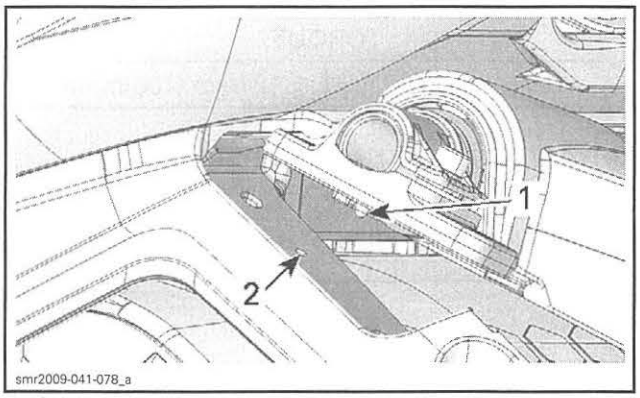

1. Support pin
2. Holder hole

4. Tighten the LH support screws to specification.

TORQUE	
Upper arm support screws	25 N•m (18 lbf•ft)

5. Apply a force on the RH support to move it to the left side.

NOTE: A bar clamp can be used to compress both supports together.

NOTICE Make sure arm shaft is fully inserted, it must lay flush against the arm shaft support.

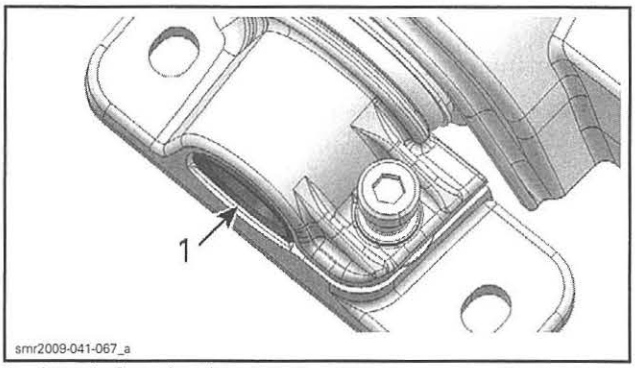

1. Arm shaft against its support

6. Install NEW support screws and tighten them to specification.

TORQUE	
Upper arm support screws	25 N•m (18 lbf•ft)

7. Secure both supports to shaft using NEW socket screws.
8. Tighten upper shaft screws to specification.

TORQUE	
Upper shaft screws	12 N•m (106 lbf•**in**)

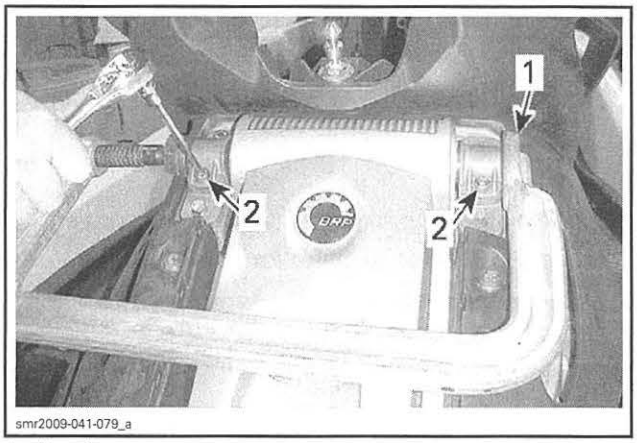

1. Bar clamp
2. New socket screws

Removal of Rear Suspension Arm Lower Shaft

1. Open the boarding platform.
2. Remove bolts securing both rear suspension arm covers.

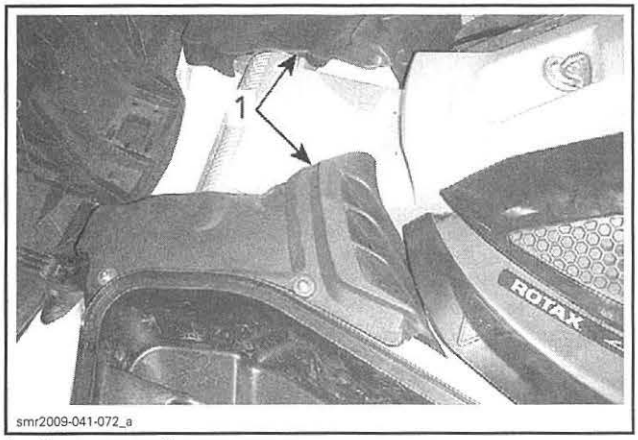

1. Rear suspension arm cover

3. **Mark position of rear suspension arm brackets for proper reinstallation.**
4. Remove and discard screws securing rear suspension arm to fixed deck.

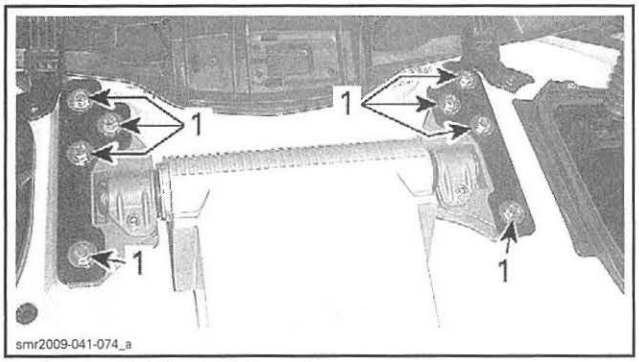

1. Rear suspension arm screws

5. Remove and discard socket screws securing rear brackets to arm shaft ends.

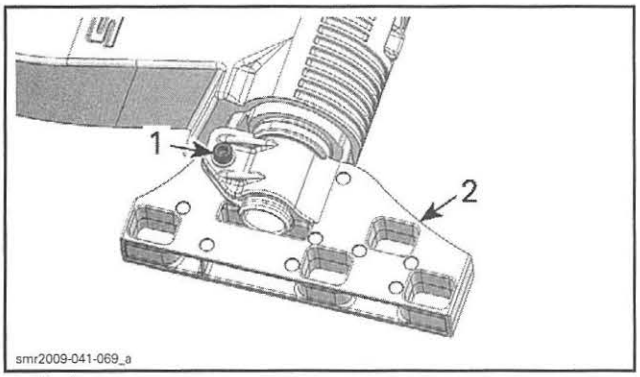

1. Socket screw
2. LH rear bracket

6. Press one rear bracket against the suspension arm bushing and remove the circlip. Repeat for the other side.

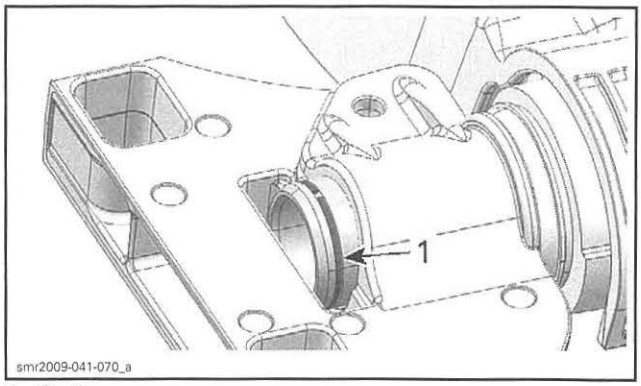

1. Circlip

Installation of Rear Suspension Arm Lower Shaft

1. When reassembly the rear bracket on shaft end, press bracket on bushing to install the circlip.
2. When both brackets are installed on shaft, pull brackets outside to position circlips against brackets.

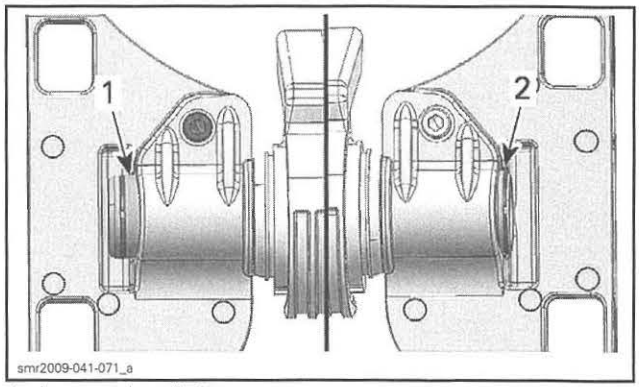

1. Incorrect installation
2. Proper installation

3. Lower the rear suspension arm on fixed deck.
4. Tighten **NEW** socket screws to specification.

TORQUE	
Lower shaft screws	10 N•m (89 lbf•**in**)

5. Refer to *REAR ARM* for reinstallation.

ADJUSTABLE SUSPENSION (aS)

SERVICE TOOLS

Description	Part Number	Page
SUPERTANIUM DRILL BIT 3/16"	529 031 800	550

FRONT SUSPENSION ARM

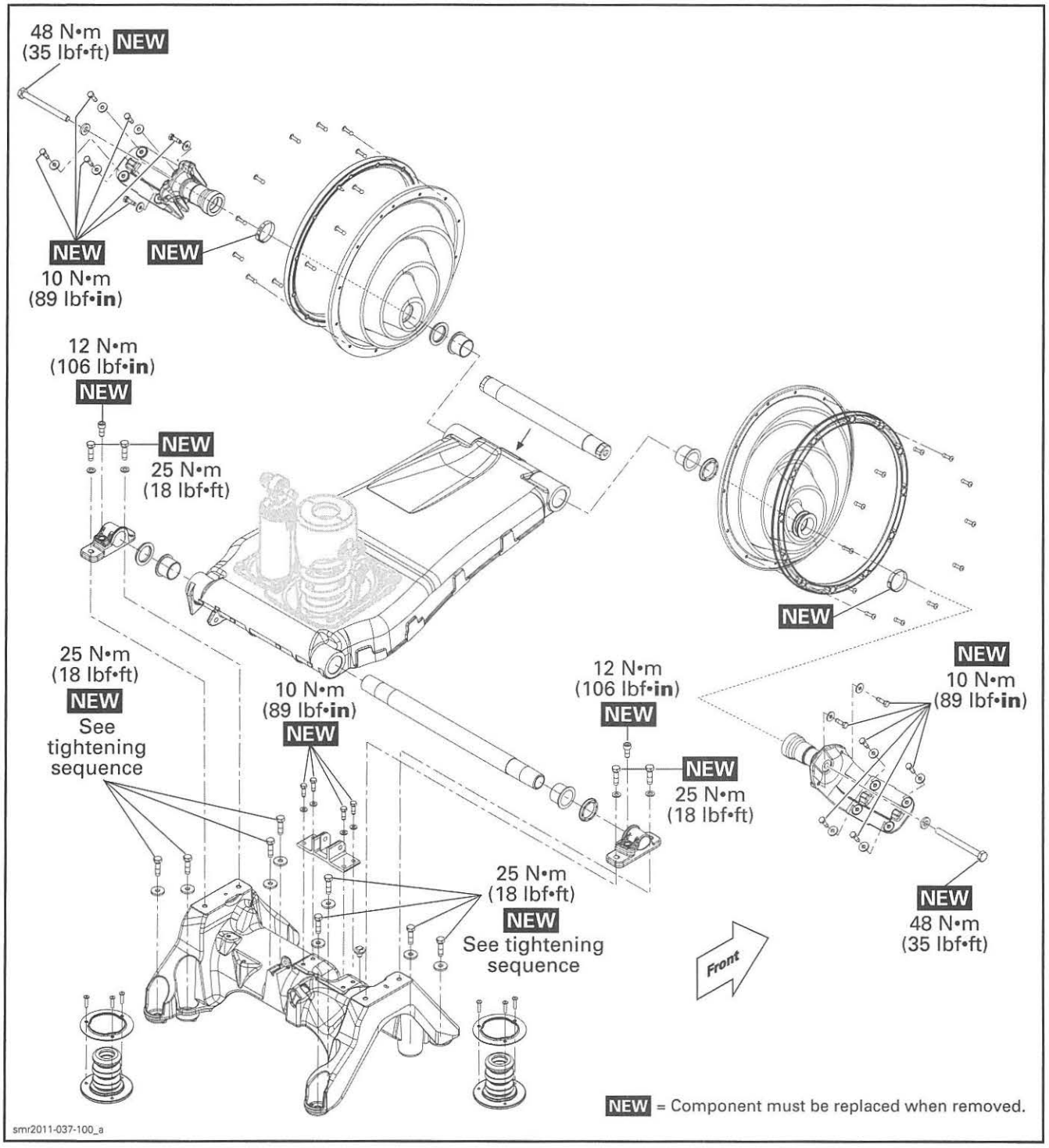

SHOCK ABSORBER

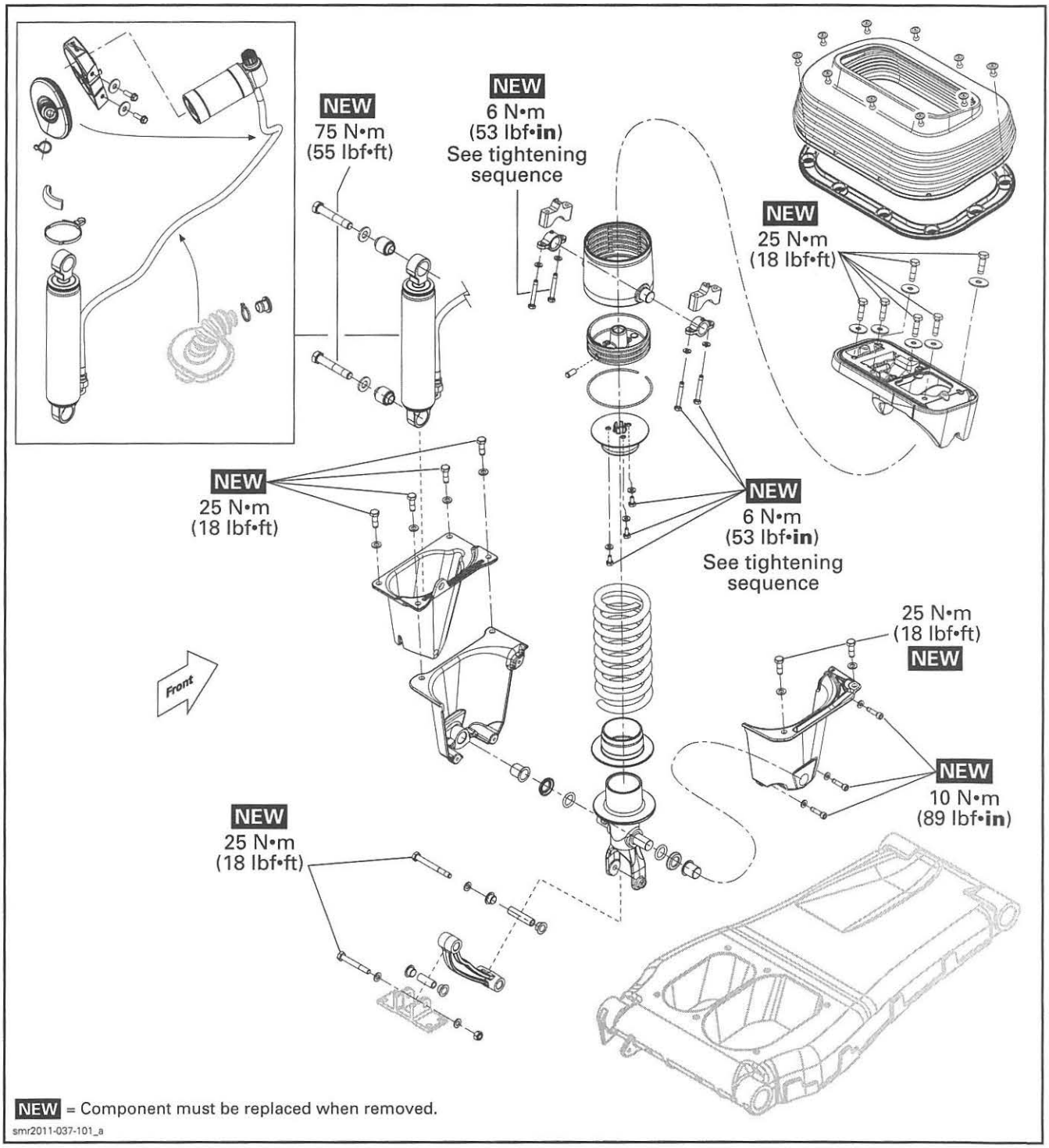

REAR SUSPENSION ARM

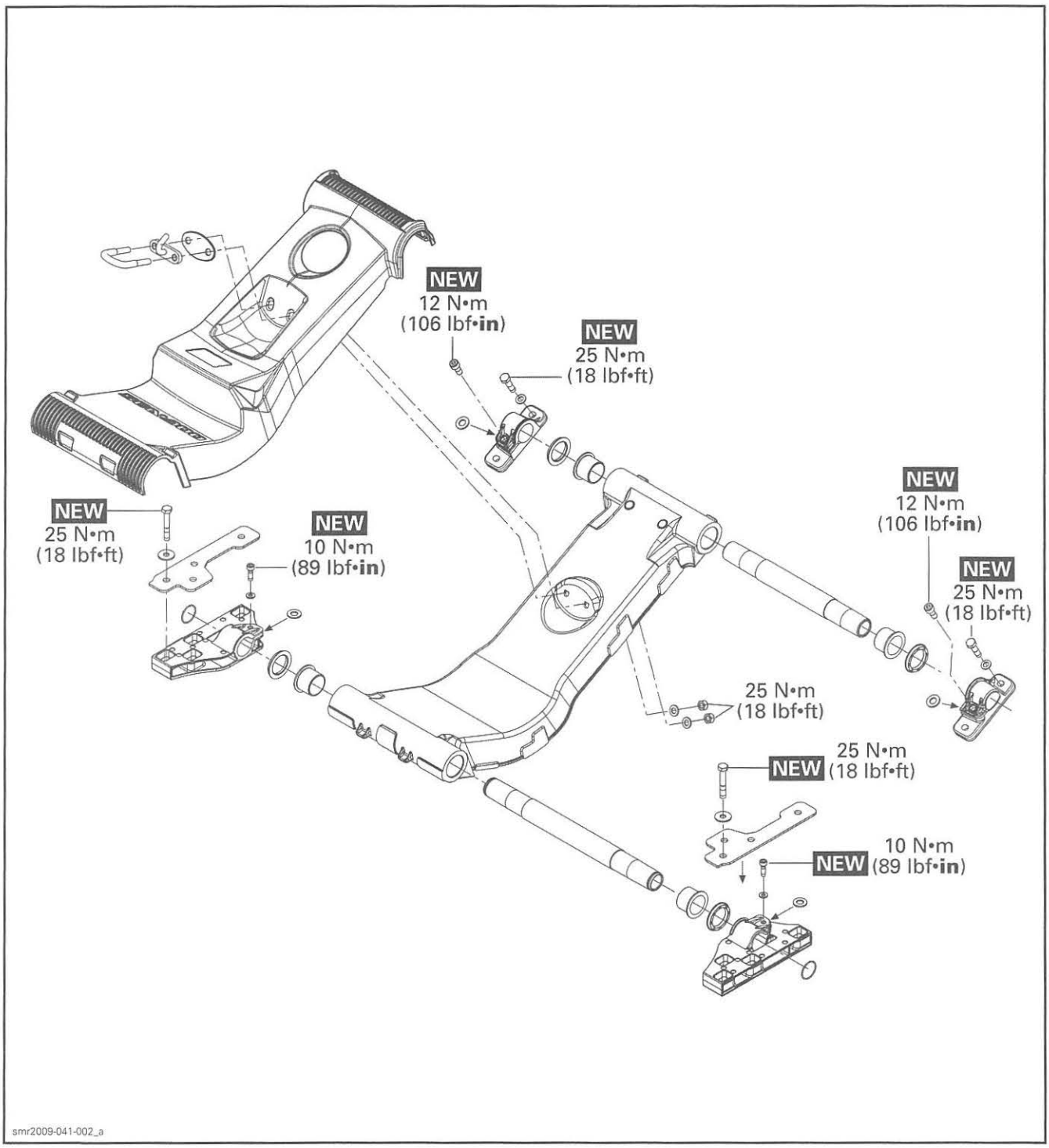

GENERAL

SYSTEM DESCRIPTION

The adjustable Suspension (aS) allows the moving deck to move independently from the fixed deck, isolating rider and passenger from the impact of rough water.

With the aS feature, the moving deck may be adjusted mechanically to absorb (dampen) water shocks according to the driver riding style and water conditions.

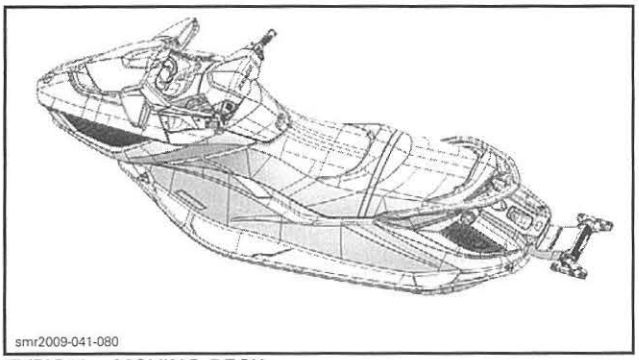
smr2009-041-080

TYPICAL - MOVING DECK

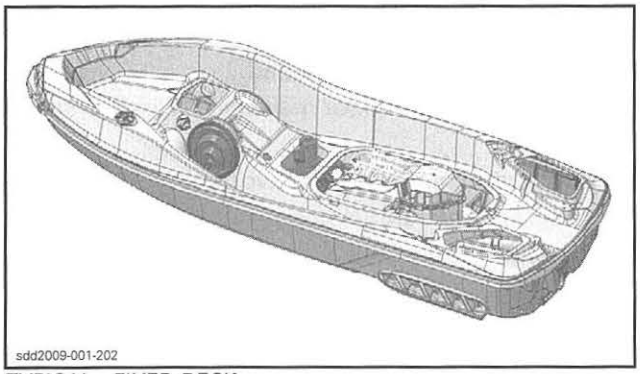
sdd2009-001-202

TYPICAL - FIXED DECK

Spring Preload Adjustment

The spring preload can be easily adjusted using a 1/2" drive ratchet wrench with an extension.

The spring preload adjuster is located under the seat.

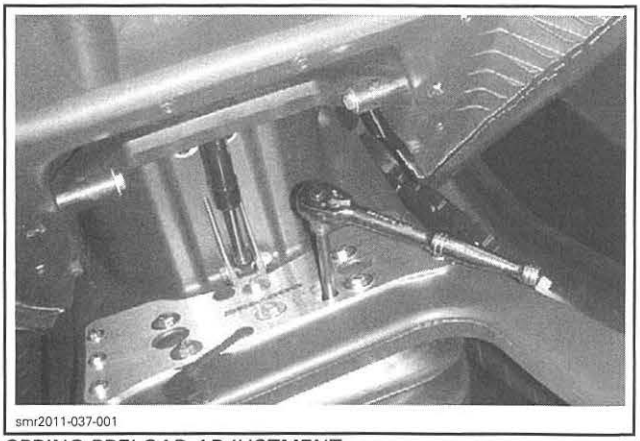
smr2011-037-001

SPRING PRELOAD ADJUSTMENT

RIDERS TOTAL WEIGHT (KG/LB)	NBR OF CLICKS ON SPRING ADJUSTER (CLOCKWISE*)
57 kg (125 lb)	0
73 kg (160 lb)	2
89 kg (195 lb)	4
105 kg (230 lb)	6
120 kg (265 lb)	8
136 kg (300 lb)	10
152 kg (335 lb)	12
168 kg (370 lb)	14
184 kg (405 lb)	16
200 kg (440 lb)	18
* 0 is set at fully unscrewed position (counterclockwise).	

Damping Adjustment

The aS Suspension damping may be personally adjustable according to the driving preferences and water conditions.

Damping adjustment is carried out via the remote nitrogen reservoir in the glove box.

A blue knob located in glove box allows damper adjustment for this purpose.

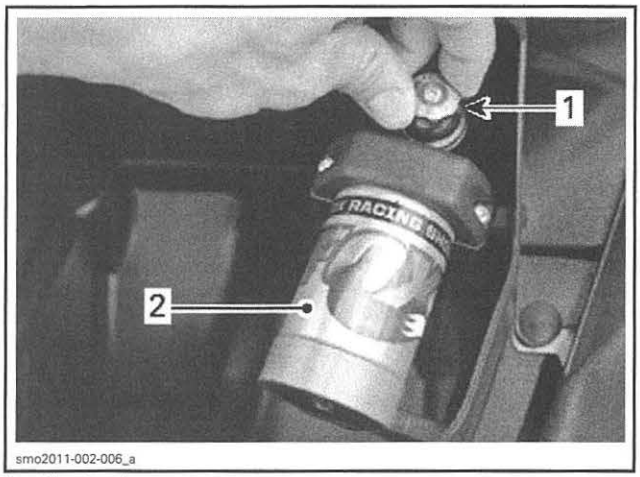

smo2011-002-006_a

1. *Blue knob*
2. *Nitrogen gas damper*

TYPICAL CONDITIONS	NBR OF CLICKS ON DAMPER ADJUSTER (CLOCKWISE*)
Calm water	0
	5
Rough water	10
	15
Offshore	20
* 0 is set at fully unscrewed position (counterclockwise).	

NOTE: These adjustments are provided as guidelines to ensure optimum suspension performance. Personal preference may dictate different settings than those recommended.

TROUBLESHOOTING

DIAGNOSTIC GUIDELINES

The following is provided to help in diagnosing the probable source of troubles. It is a guideline and it should not be assumed to list all possible problems.

SUSPENSION MOVES ERRATICALLY

1. Defective shock absorber.
   - *Replace the shock absorber.*
2. Broken spring.
   - *Replace spring.*

SUSPENSION NOISE (DURING A TURN)

1. Front or rear suspension arm shaft supports position.
   - *Supports must be flushed against both ends of shaft. Reposition shaft in its supports.*
2. Worn arm shaft bushings.
   - *Check front and rear arm shaft bushings condition and replace as required.*
3. Snap rings on both sides of the rear lower arm shaft are not properly positioned.
   - *Reposition shaft in its supports. Refer to SUSPENSION ARM SHAFTS.*

SUSPENSION NOISE (FRONT OF SEAT)

1. Holder retaining screws are loose.
   - *Tighten shock absorber holder screws to recommended torque.*
2. Shock absorber screws are loose.
   - *Tighten shock absorber screws to recommended torque.*

SUSPENSION BOTTOMS HARD

1. Spring out of specification or broken.
   - *Replace spring.*
2. Shock absorber is damaged.
   - *Check shock absorber resistance. Replace shock absorber.*
3. Bump stops damaged or worn.
   - *Replace both bump stops.*

PROCEDURES

SHOCK ABSORBER

Shock Absorber Location

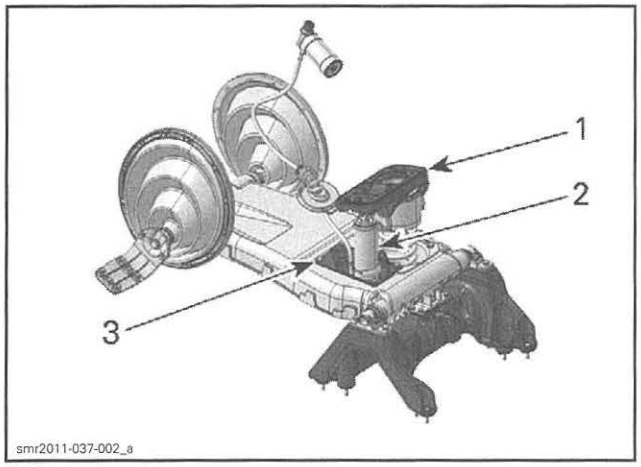

1. *Mounting plate*
2. *Shock absorber*
3. *Shock holder*

Shock Absorber Removal

1. Remove moving deck. Refer to *BODY* subsection.
2. Remove shock absorber upper bolt.

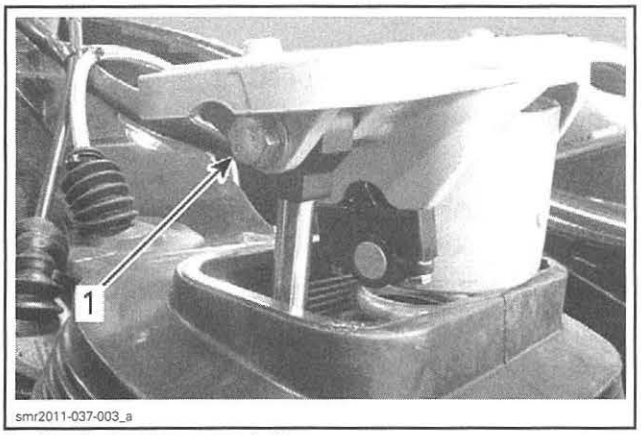

1. *Shock absorber upper bolt*

3. Remove mounting plate by pulling it upwards.

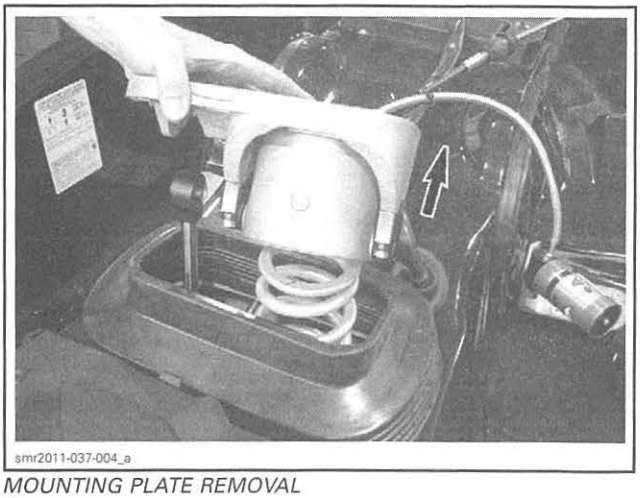

MOUNTING PLATE REMOVAL

4. Remove spring and lower spring bushing.

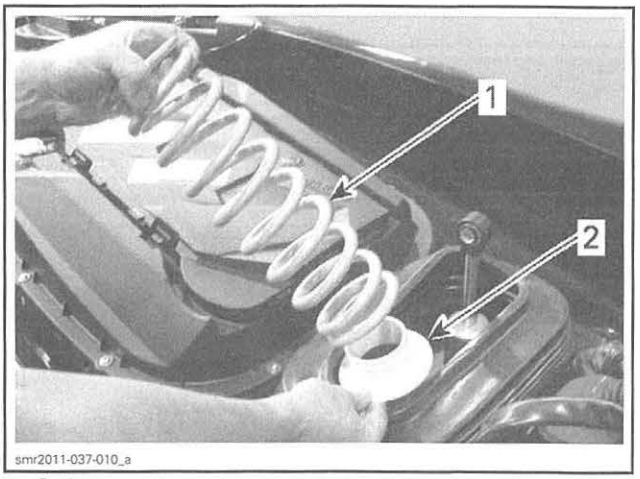

1. *Spring*
2. *Lower spring bushing*

5. Remove shock holder retaining screws.

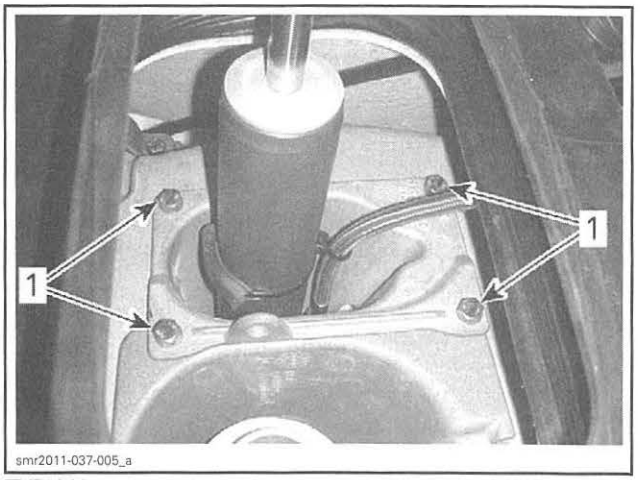

TYPICAL
1. *Shock holder retaining screws*

6. Remove locking tie securing remote reservoir hose.

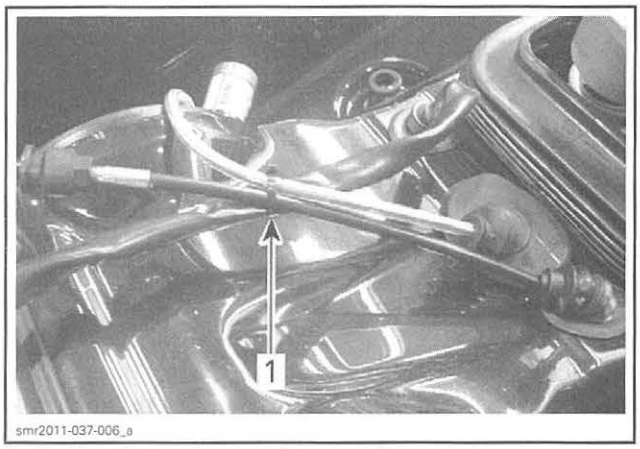

1. Locking tie securing remote reservoir hose

7. Remove bellows of remote reservoir hose from deck.
8. Insert remote reservoir into deck hole.

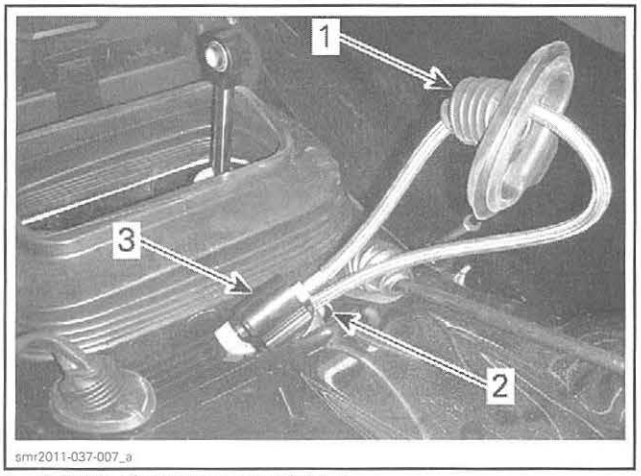

1. Bellows of remote reservoir hose
2. Deck hole
3. Remote reservoir

9. Remove shock absorber and remote reservoir.

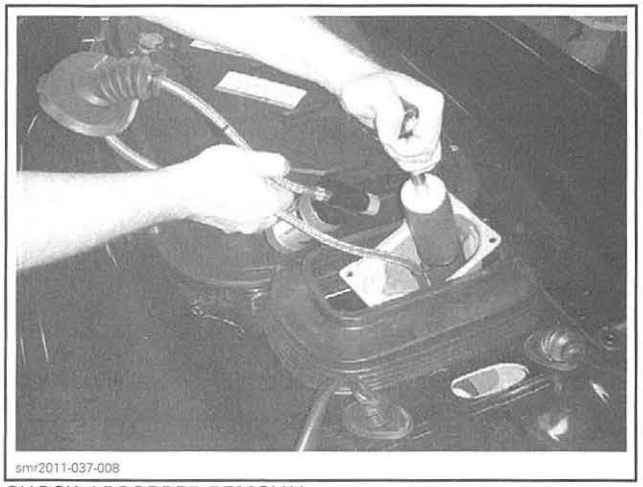

SHOCK ABSORBER REMOVAL

10. Remove shock holder from shock absorber.

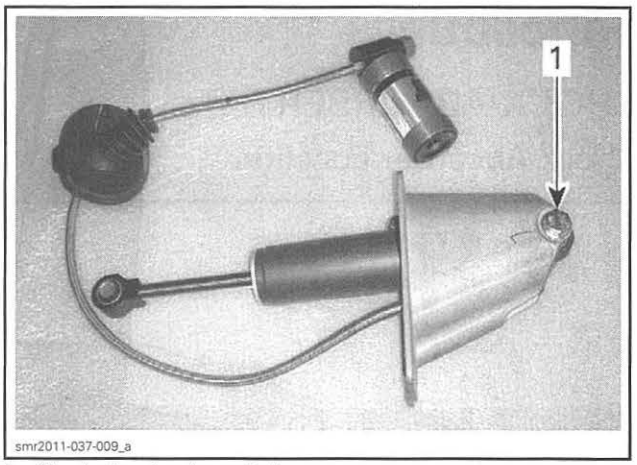

1. Shock absorber lower bolt

Shock Absorber Inspection

NOTE: Because of gas pressure, strong resistance is felt when compressing shock.

To inspect shock operation, or if suspecting an internal leak between oil chamber and gas chamber, check shock as follows:

1. Grab the shock absorber body firmly and press the rod end against a firm surface.
   - 1.1 Verify the compression stroke when the rod is fully extended.
   - 1.2 Make sure that shock absorber rod can be completely inserted in the shock body.
2. The shock should extend unassisted. Rod must come out at a steady speed.

If any problem is detected, replace the shock absorber.

Shock Absorber Installation

The installation is the reverse of the removal procedure. However, pay attention to the following.

Secure shock absorber using **NEW** bolts.

Tighten shock absorber bolts to specification.

TORQUE	
Shock absorber bolt	75 N•m (55 lbf•ft)

Install **NEW** shock holder screws.

Tighten shock holder screws to specification.

TORQUE	
Shock holder screw	25 N•m (18 lbf•ft)

SPRING

Spring Location

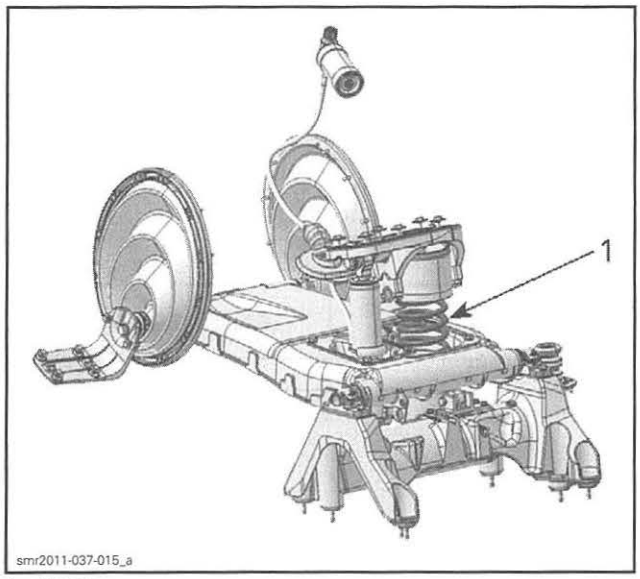

1. Spring

Spring Removal

1. Remove moving deck. Refer to *BODY* subsection.
2. Remove shock holder from its location. Refer to *SHOCK ABSORBER* in this subsection.

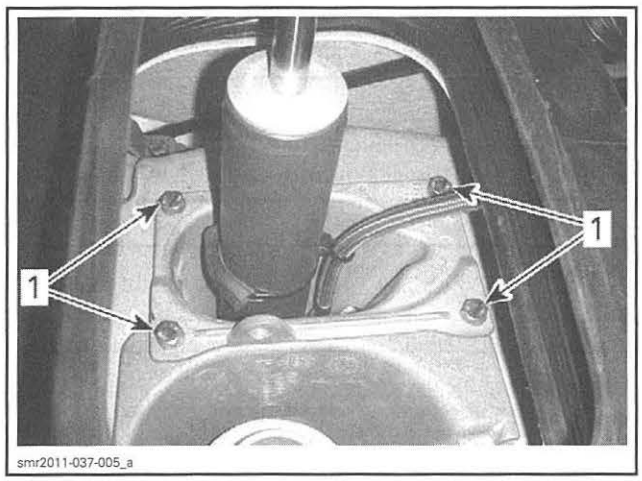

TYPICAL
1. Shock holder retaining screws

3. Move shock holder aside.
4. Remove spring holder retaining screws.

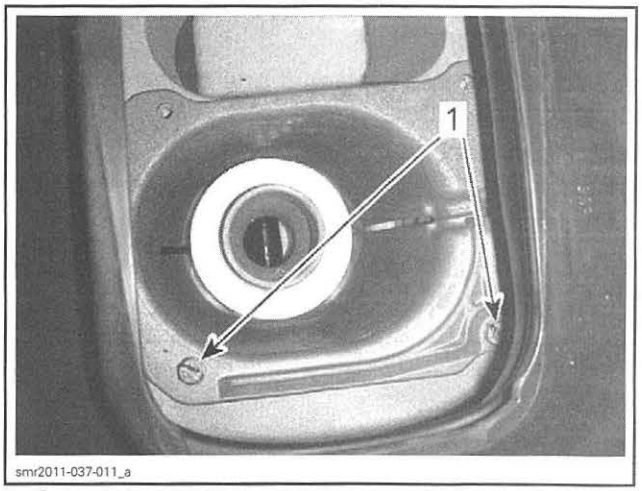

1. Spring holder retaining screws

5. Remove screw securing spring holder to link arm.

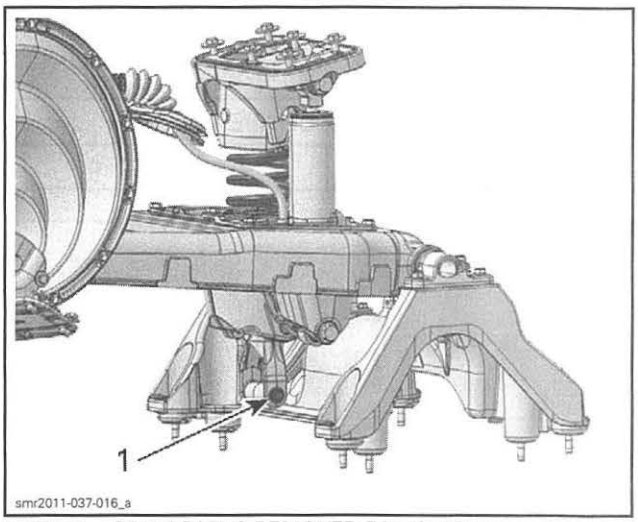

TYPICAL - SOME PARTS REMOVED FOR CLARITY
1. Screw securing spring holder to link arm

6. Remove spring holder.

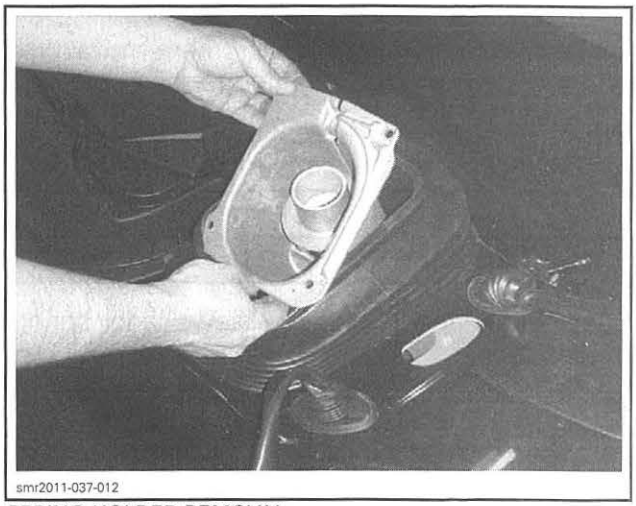

SPRING HOLDER REMOVAL

Spring Inspection

Inspect spring and replace if one of the following damage is detected:
- Crack in the paint
- Rust
- Other visible damages.

NOTE: If rust is limited to a 1/4 of the first coil, the spring should not be replaced.

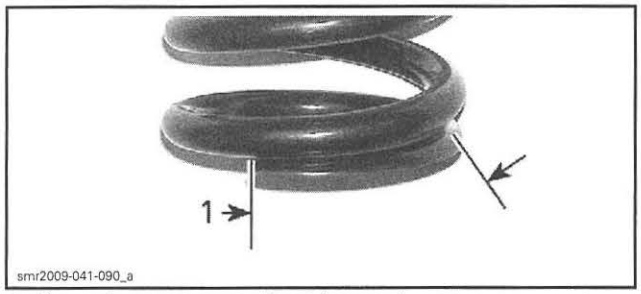

1. Zone where presence of rust is normal

Check the curve line of spring.

SPRING SHAPE	
Maximum	7 mm (9/32 in)

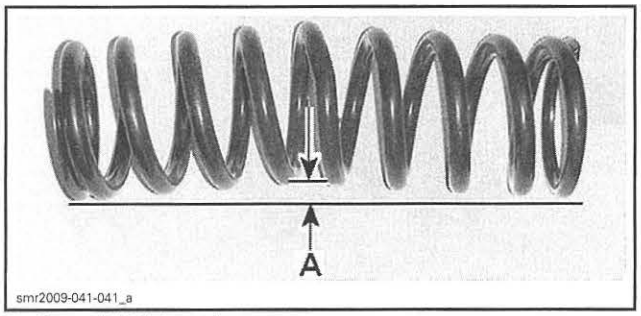

A. 7 mm (9/32 in) maximum

Replace spring if out of specification.

Spring Installation

The installation is the reverse of the removal procedure. However, pay attention to the following.

Secure shock absorber using **NEW** bolts.

Tighten shock absorber bolts to specification.

TORQUE	
Shock absorber bolt	75 N•m (55 lbf•ft)

Install **NEW** shock holder screws and spring holder screws.

Tighten shock and spring holder screws to specification.

TORQUE	
Shock holder screw	25 N•m (18 lbf•ft)
Spring holder screw	25 N•m (18 lbf•ft)

If spring supports were disassembled, pay attention to the following.

Install **NEW** upper spring support screws.

Tighten upper spring support screws to specification as per the following sequence.

TORQUE	
Upper spring support screw	6 N•m (53 lbf•**in**)

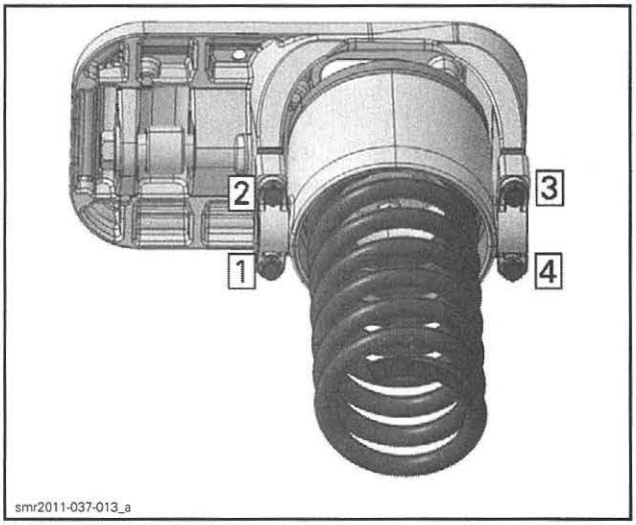

TIGHTENING SEQUENCE

Tighten upper wear ring retaining screws to specification as per the following sequence.

TORQUE	
Upper wear ring retaining screw	6 N•m (53 lbf•**in**)

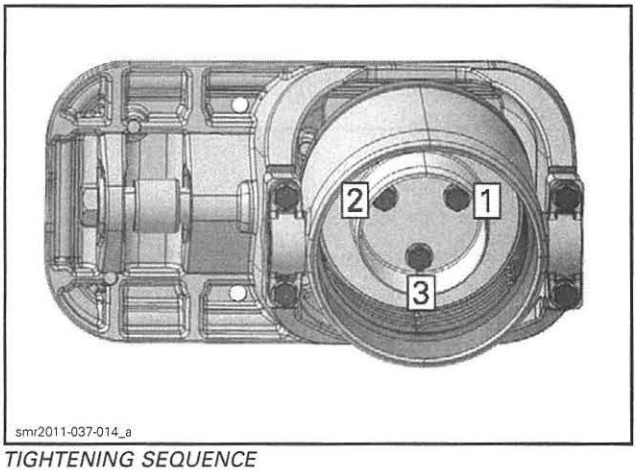

TIGHTENING SEQUENCE

LINK ARM

Link Arm Access

Refer to *BODY* subsection and remove:
- Moving deck
- Deck extension.

Link Arm Removal

1. Remove spring holder. Refer to *SPRING REMOVAL* in this subsection.
2. Remove link arm lower retaining bolt.

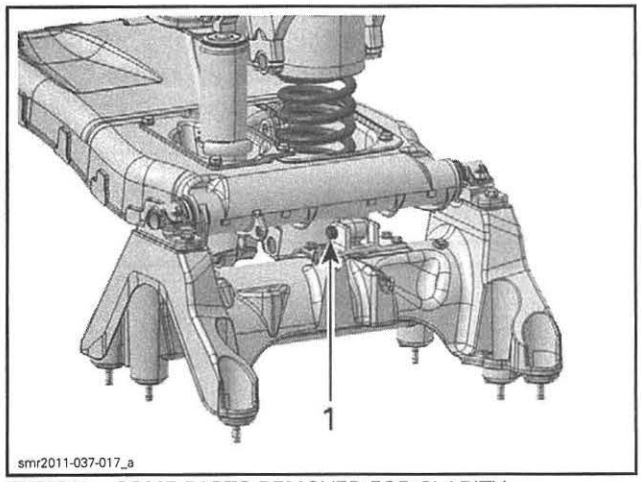

TYPICAL - SOME PARTS REMOVED FOR CLARITY
1. Link arm lower retaining bolt

Link Arm Installation

The installation is the reverse of the removal procedure. However, pay attention to the following.

Secure link arm using NEW bolts.

Tighten link arm bolts to specification.

TORQUE	
Link arm bolt	25 N•m (18 lbf•ft)

LATERAL SUPPORT

Lateral Support Location

The lateral supports are located on both side of the fixed deck to support the moving deck.

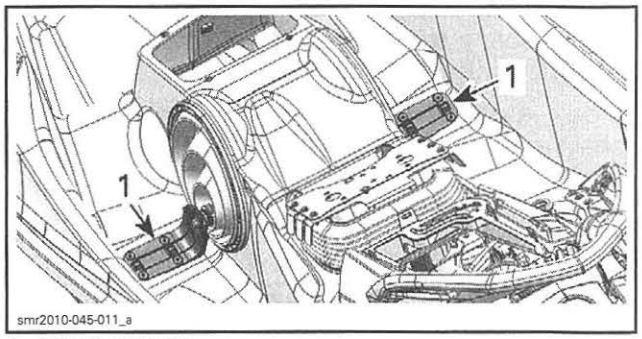

1. Lateral supports

Lateral Support Removal

NOTE: The following instruction can be used for RH or LH support.

1. Remove the moving deck. Refer to *BODY* subsection.
2. Cut the Oetiker clamp retaining lateral bellows to lateral support.

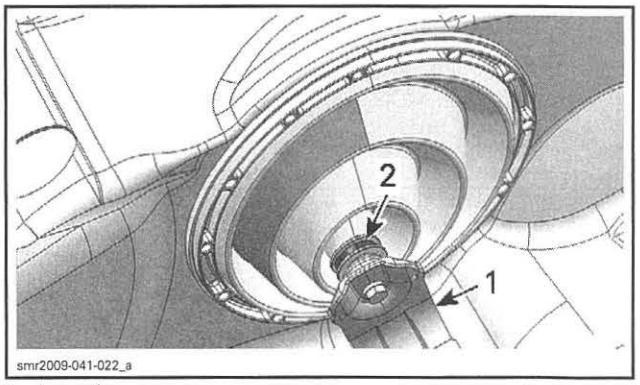

1. Lateral support
2. Oetiker clamp

3. Remove the lateral support screw.

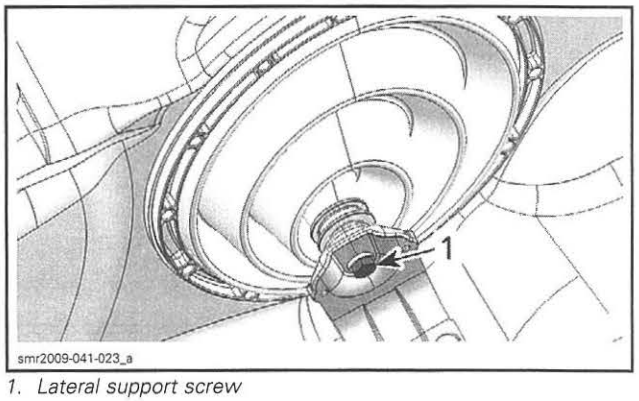

1. Lateral support screw

4. Remove lateral support from lateral bellows.

Lateral Support Installation

The installation is the reverse of the removal procedure. However, pay attention to the following.

Apply soapy water solution on bellows opening and insert the lateral support.

Index lateral supports with the front suspension shaft ends. Lateral supports can be inserted in one position only.

Install **new** lateral support screw.

Tighten lateral support screw to specification.

TORQUE	
Lateral support screw	48 N•m (35 lbf•ft)

Install a **new** Oetiker clamp. Position the ear of clamp rearwards.

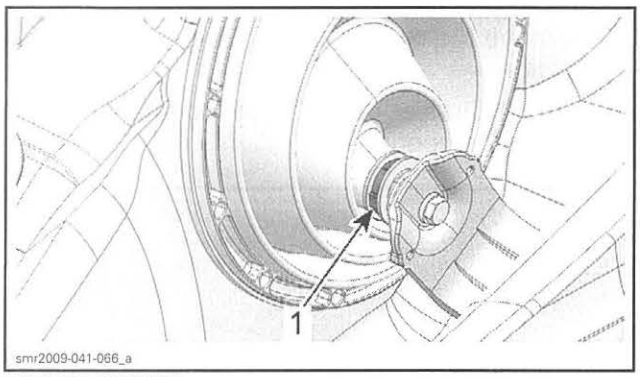

RH SIDE SHOWN
1. Ear of clamp rearwards

LATERAL BELLOWS

Lateral Bellows Location

The lateral bellows are located on each side of the fixed deck.

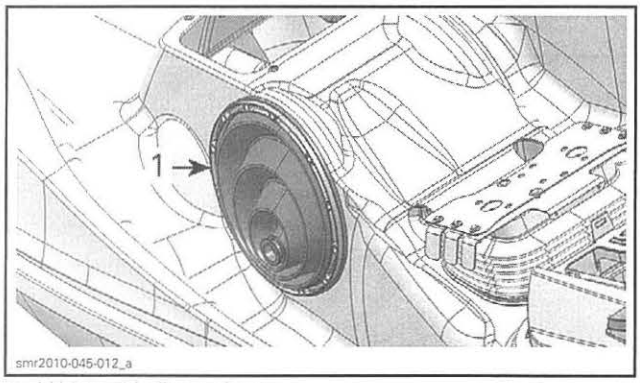

1. LH lateral bellows shown

Lateral Bellows Removal

1. Remove lateral support screw.

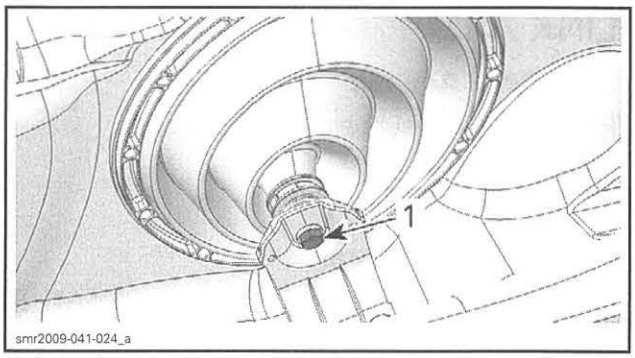

1. Lateral support screw

2. Detach lateral support from suspension shaft.
3. Using the SUPERTANIUM DRILL BIT 3/16" (P/N 529 031 800), remove all rivets (12) securing the lateral bellows ring to body.

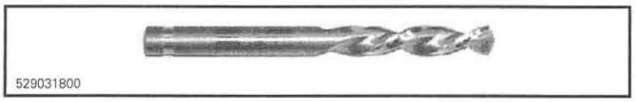

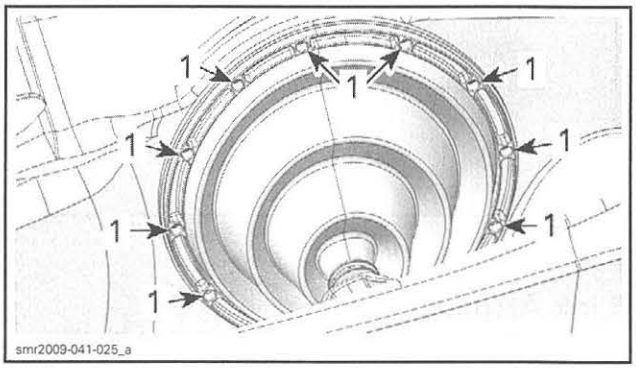

1. Rivet location

4. Remove lateral ring.
5. Cut Oetiker clamp securing bellows to lateral support.
6. Separate lateral support from bellows.

Lateral Bellows Installation

The installation is the reverse of the removal procedure. However, pay attention to the following.

Apply soapy water solution on bellows opening and insert the lateral support.

Index suspension shaft with the lateral support. The lateral support can be inserted in one position only.

Install the retaining ring. Align the ring pin with holes in bellows and body.

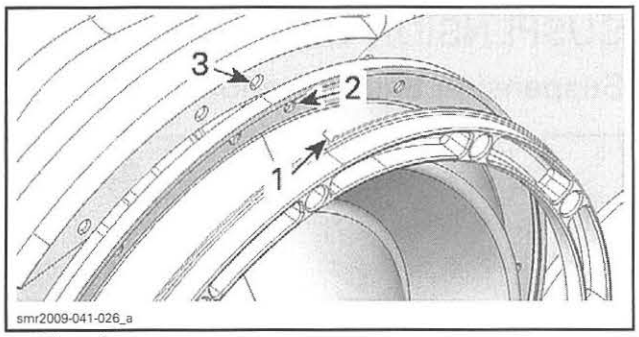

1. *Ring pin*
2. *Bellows alignment hole*
3. *Body hole*

Install new rivets. If the head of rivet tool cannot be inserted in ring opening, use the sleeve (P/N 707 000 181) to offset the rivet tool and well lean the rivet head against ring.

Index lateral supports with the front suspension shaft ends. Lateral supports can be inserted in one position only.

Install **new** lateral support screw.

Tighten lateral support screw to specification.

TORQUE	
Lateral support screw	48 N•m (35 lbf•ft)

Install a new Oetiker clamp. Position the ear of clamp rearwards.

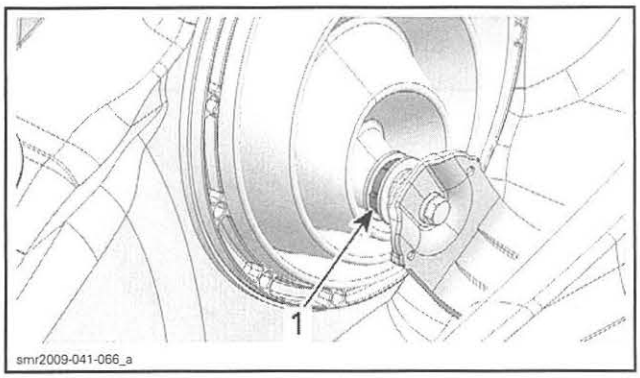

RH SIDE SHOWN
1. *Ear of clamp rearwards*

FRONT SUSPENSION ARM

Front Suspension Arm Location

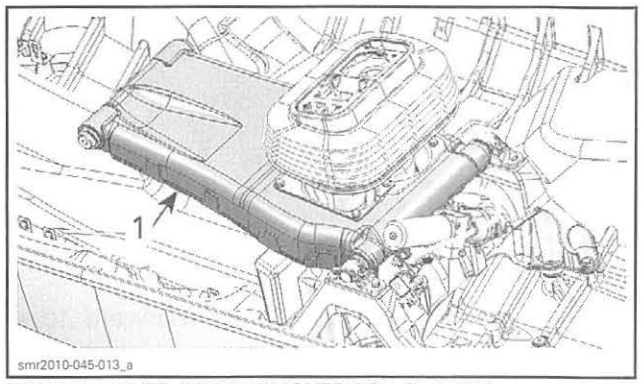

TYPICAL - FIXED DECK REMOVED FOR CLARITY
1. *Front suspension arm*

Front Suspension Arm Removal

1. Remove the moving deck. Refer to *BODY* subsection.
2. Remove the engine. Refer to *ENGINE REMOVAL AND INSTALLATION* subsection.
3. Remove both lateral support screws.

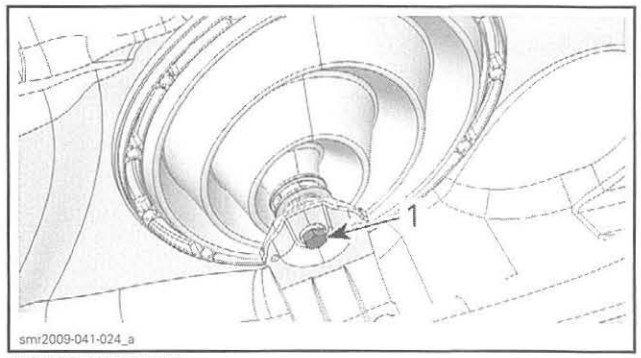

RH SIDE SHOWN
1. *Lateral support screw*

4. Detach lateral supports from suspension arm shaft.
5. Remove screws securing both shaft supports to suspension base.

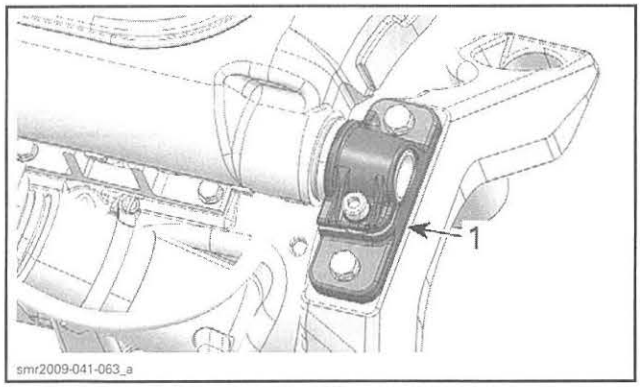

1. Shaft support (one on each side)

6. Move front suspension arm rearward to remove it.

Front Suspension Arm Installation

The installation is the reverse of the removal procedure. However, pay attention to the following.

If a shaft support has been loosened from the suspension arm shaft, see *SUSPENSION ARM SHAFTS* for proper installation procedure.

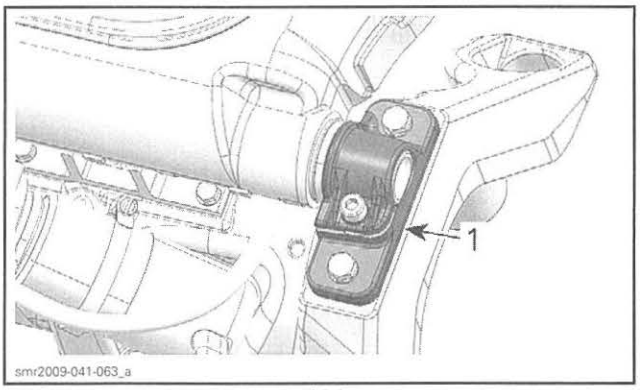

1. Shaft support (one on each side)

Install NEW shaft support screws.

Tighten shaft support screws to specification.

TORQUE	
Shaft support screws	25 N•m (18 lbf•ft)

SUSPENSION BASE

Suspension Base Location

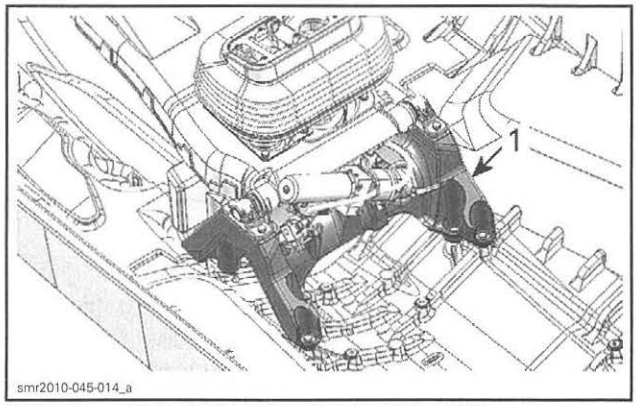

TYPICAL - FIXED DECK REMOVED FOR CLARITY
1. Suspension base

Suspension Base Removal

1. Refer to the appropriate procedures and remove the following parts:
   - Moving deck
   - Engine
   - Shock absorber and spring.
2. Using a marker, **trace the shape of suspension base at the bottom of the hull** to reposition it at the same place.
3. Remove screws securing both shaft supports to suspension base.

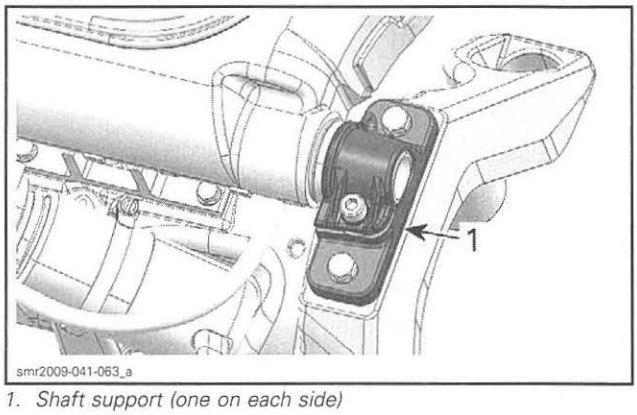

1. Shaft support (one on each side)

4. Remove and discard suspension base screws.

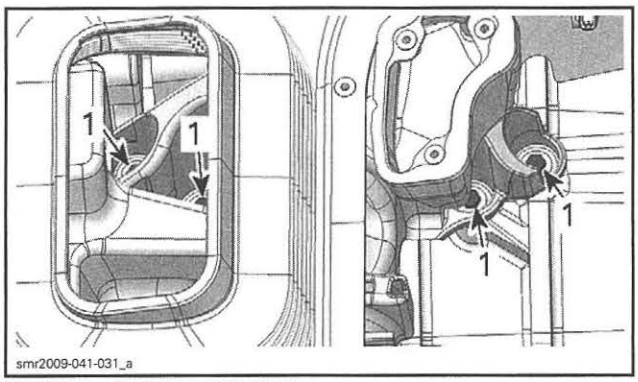

TYPICAL - STARBOARD SIDE
1. Suspension base screws

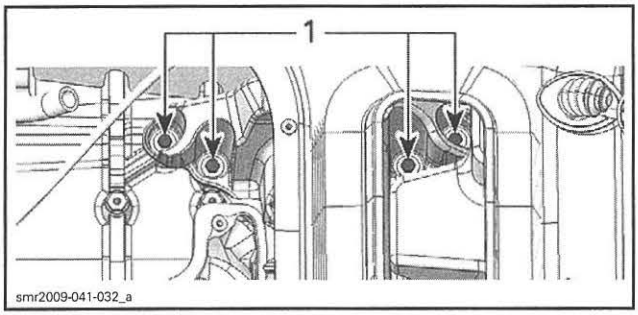

TYPICAL - PORT SIDE
1. Suspension base screws

5. Remove suspension base with the rear vent duct.

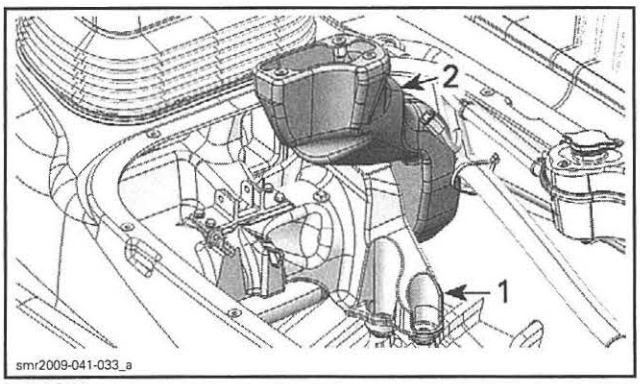

TYPICAL
1. Suspension base
2. Rear vent duct

Suspension Base Installation

The installation is the reverse of the removal procedure. However, pay attention to the following.

1. Install the suspension base.
   1.1 Position the base in accordance with the reference marks previously drawn at the bottom of the hull.

   NOTE: If no marks are available, see *SUSPENSION BASE INSTALLATION WITHOUT REFERENCE MARKS*.

   1.2 Install **NEW** suspension base screws.
   1.3 Tighten suspension base screws to specification as per the following sequence.

TORQUE	
Suspension base screws	25 N•m (18 lbf•ft)

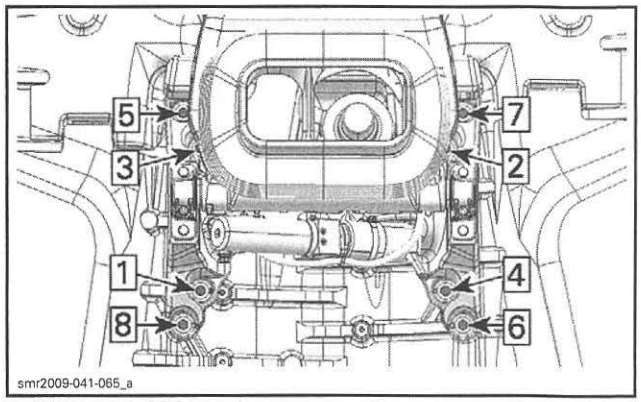

TIGHTENING SEQUENCE

2. Install **NEW** shaft support screws to secure front suspension arm.
3. Tighten shaft support screws to specification.

TORQUE	
Shaft support screws	25 N•m (18 lbf•ft)

4. Refer to the appropriate procedures and install all other removed parts.
   - Shock absorber and spring
   - Engine
   - Moving deck.

Suspension Base Installation without Reference Marks

1. Install the suspension base on watercraft using **NEW** screws. Do not tighten them yet.
2. Install **NEW** shaft support screws to secure front suspension arm.
3. Tighten shaft support screws to specification.

TORQUE	
Shaft support screws	25 N•m (18 lbf•ft)

4. Install lateral supports.
   4.1 Index lateral supports with the front suspension shaft ends. Lateral supports can be inserted in one position only.
   4.2 Tighten lateral support screws to specification.

TORQUE	
Lateral support screws	48 N•m (35 lbf•ft)

5. Align suspension base on watercraft.
   5.1 On both sides, measure the distance between the end of lateral support and fixed deck.

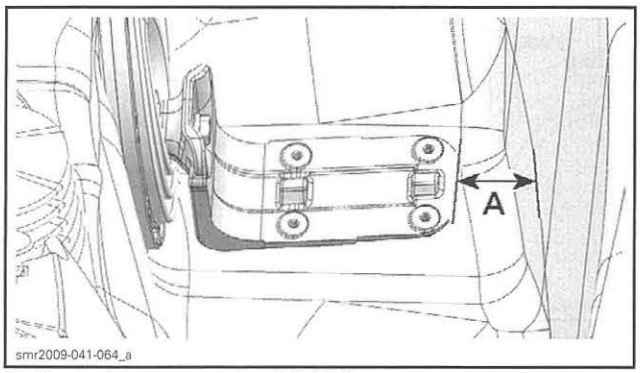

A. Same distance on LH and RH sides

   5.2 If required, move suspension base until both distances are equal.
   5.3 Tighten suspension base screws to specification as per the following sequence.

TORQUE	
Suspension base screws	25 N•m (18 lbf•ft)

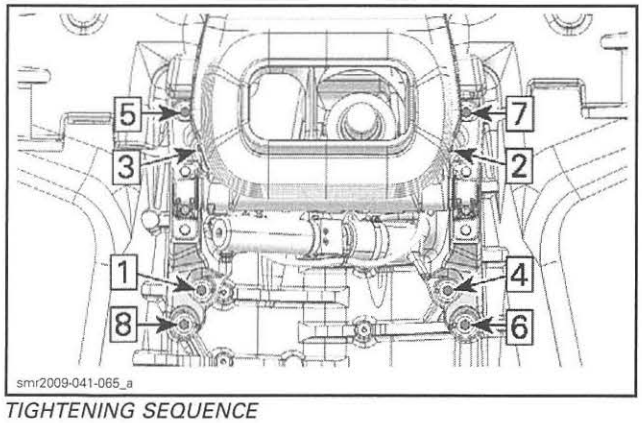

TIGHTENING SEQUENCE

6. Refer to the appropriate procedures and install all other removed parts.
   - Shock absorber and spring
   - Engine
   - Moving deck.

REAR SUSPENSION ARM

Rear Suspension Arm Location

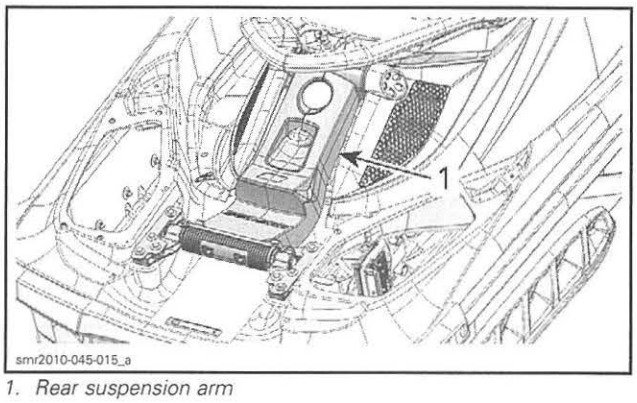

1. Rear suspension arm

Rear Suspension Arm Removal

1. Open the boarding platform.
2. Remove bolts securing both rear suspension arm covers.

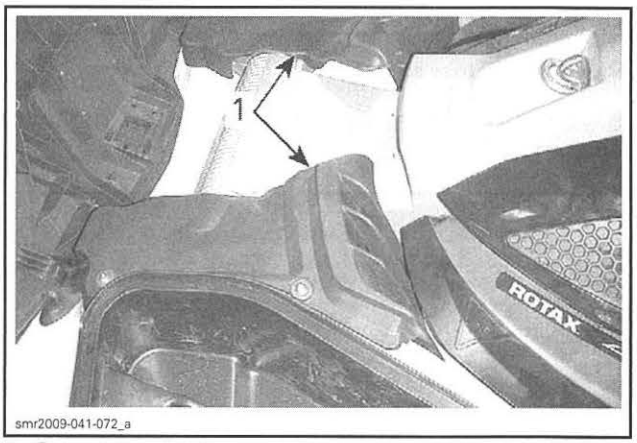

1. Rear suspension arm cover

3. Unclip and remove both lateral rear panels.

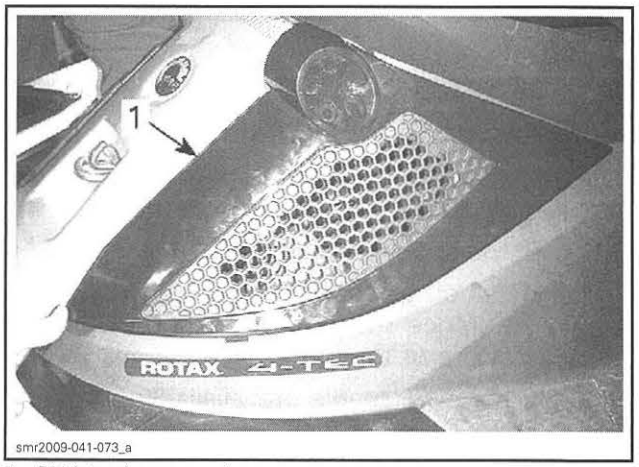

1. RH lateral rear panel

4. Mark position of rear suspension arm brackets for proper reinstallation.
5. Remove and discard screws securing rear suspension arm to fixed deck.

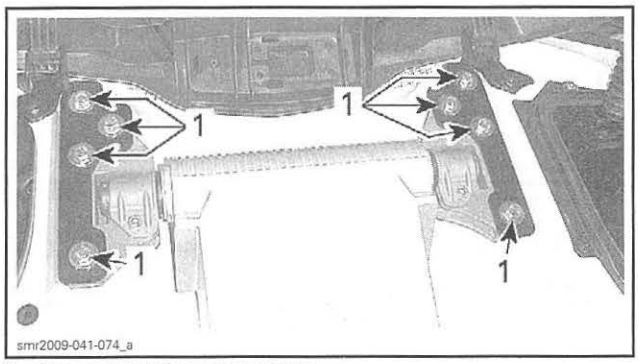

1. Rear suspension arm screws

6. Remove and discard screws securing the top of rear suspension arm.

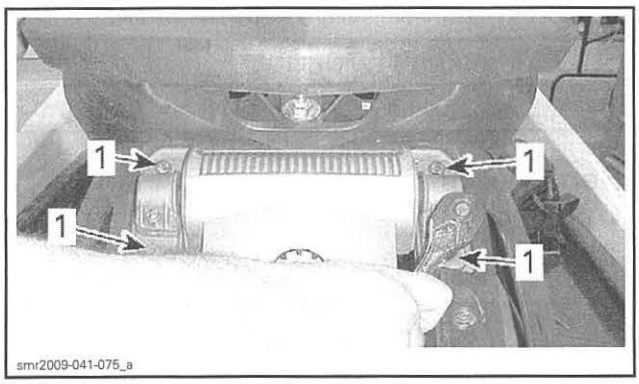

1. Retaining screws

7. Remove the rear suspension arm from watercraft.

Rear Suspension Arm Installation

1. Using NEW screws, install the top of rear suspension arm.

NOTE: If the upper arm shaft or one of its arm shaft support has been removed or loosened, refer to *SUSPENSION ARM SHAFTS* for proper installation procedure.

2. Tighten upper arm support screws to specification.

TORQUE	
Upper arm support screws	25 N•m (18 lbf•ft)

3. Carefully lower and secure the rear suspension arm to the fixed deck.
   3.1 Position the rear suspension arm brackets in accordance with the reference marks previously draw on fixed deck.

   NOTICE If no mark was traced, refer to *REAR SUSPENSION ARM INSTALLATION WITHOUT REFERENCE MARKS* for proper procedure to install and align the rear suspension arm.

   3.2 Install NEW screws to secure rear suspension arm brackets.
   3.3 Tighten rear suspension arm screws to specification.

TORQUE	
Rear suspension arm screws	25 N•m (18 lbf•ft)

Rear Suspension Arm Installation Without Reference Marks

1. Lower the rear suspension arm on fixed deck.
2. Position the square openings of rear suspension arm brackets so that the threaded inserts in fixed deck are centered.

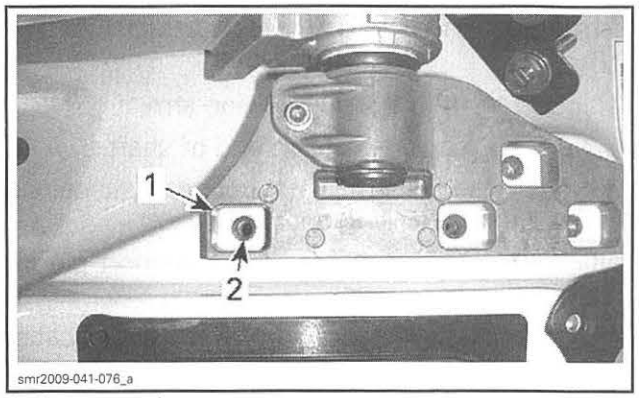

1. Square opening
2. Threaded insert

3. On each bracket, install the retaining plate and one screw.
4. Install a weight of 90 kg (200 lb) on vehicle to lower the moving deck.
5. Check moving deck position in comparison to fixed deck.
   5.1 Check the gap between moving deck wipers and fixed deck. It should be the same on both sides.
   5.2 Check front and rear gaps. Moving deck should be able to move without having contact with the fixed deck.

5.3 Reposition rear suspension arm brackets on fixed deck until positioning of moving deck is satisfactory.

6. Secure the rear suspension arm to the fixed deck.
   6.1 Install **NEW** screws to secure rear suspension arm brackets.
   6.2 Remove and replace screws installed during alignment.
   6.3 Tighten rear suspension arm screws to specification.

TORQUE	
Rear suspension arm screws	25 N•m (18 lbf•ft)

SUSPENSION ARM SHAFTS

Removal of Front Suspension Arm Shaft

1. Remove the *FRONT SUSPENSION ARM*, see procedure in this subsection.
2. Remove and discard socket screws securing supports to shaft.
3. Separate arm shaft supports from arm shaft.

Installation of Front Suspension Arm Shaft

1. Insert shaft in the suspension arm.
2. Install a support on each end of shaft.
3. Secure the LH arm shaft support to suspension base using **NEW** support screws.

NOTE: Make sure to insert the support pin into suspension base hole.

4. Tighten the LH support screws to specification.

TORQUE	
Shaft support screws	25 N•m (18 lbf•ft)

5. Apply a force on the RH support to move it on the left side.

NOTICE **Make sure arm shaft is fully inserted, it must lean against the arm shaft support.**

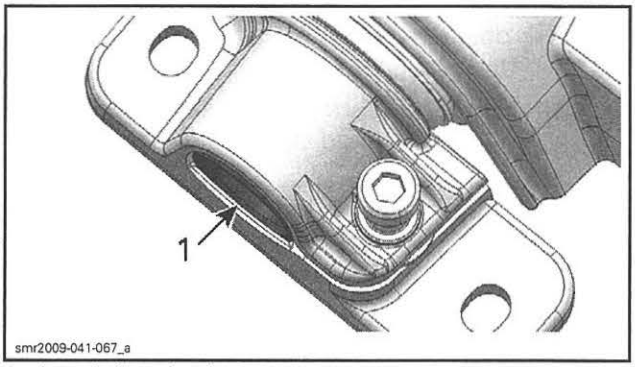

1. Arm shaft against its support

6. Install **NEW** support screws and tighten them to specification.

TORQUE	
Shaft support screws	25 N•m (18 lbf•ft)

7. Secure both supports to shaft using **NEW** socket screws.
8. Tighten shaft screws to specification.

TORQUE	
Shaft screws	12 N•m (106 lbf•**in**)

Removal of Rear Suspension Arm Upper Shaft

1. Unclip and remove both lateral rear panels.

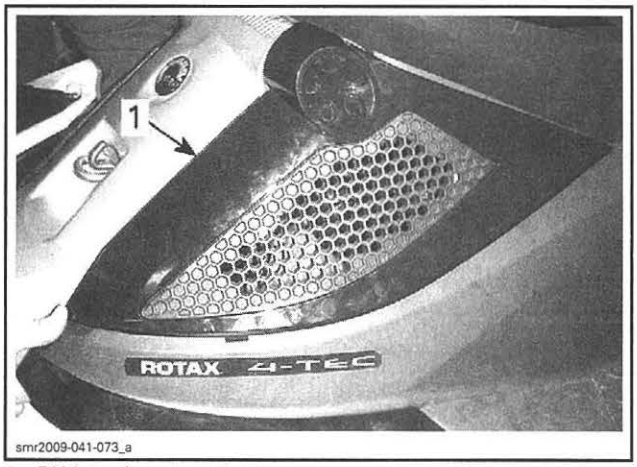

1. RH lateral rear panel

2. Remove arm shaft support screws.

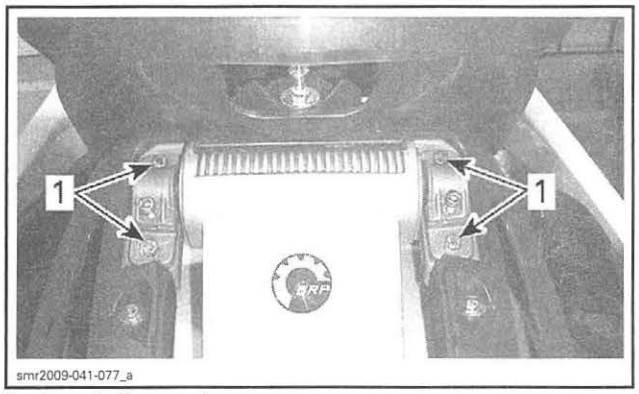

1. Arm shaft support screws

3. Remove and discard socket screws securing supports to arm shaft.
4. Separate arm shaft support from arm shaft.

Installation of Rear Suspension Arm Upper Shaft

1. Insert shaft in the rear arm.
2. Install a support on each end of shaft.
3. Secure the LH support to rear arm holder using NEW support screws.

NOTE: Make sure to insert the support pin into holder hole.

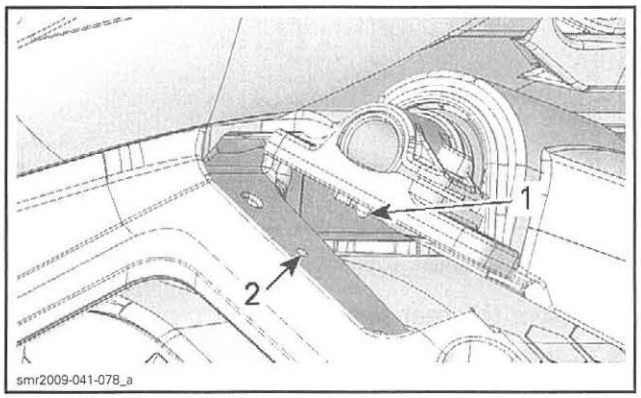

1. Support pin
2. Holder hole

4. Tighten the LH support screws to specification.

TORQUE	
Upper arm support screws	25 N•m (18 lbf•ft)

5. Apply a force on the RH support to move it to the left side.

NOTE: A bar clamp can be used to compress both supports together.

NOTICE Make sure arm shaft is fully inserted, it must lay flush against the arm shaft support.

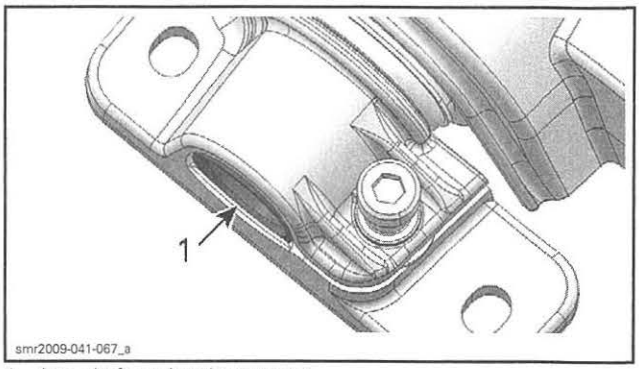

1. Arm shaft against its support

6. Install NEW support screws and tighten them to specification.

TORQUE	
Upper arm support screws	25 N•m (18 lbf•ft)

7. Secure both supports to shaft using NEW socket screws.
8. Tighten upper shaft screws to specification.

TORQUE	
Upper shaft screws	12 N•m (106 lbf•**in**)

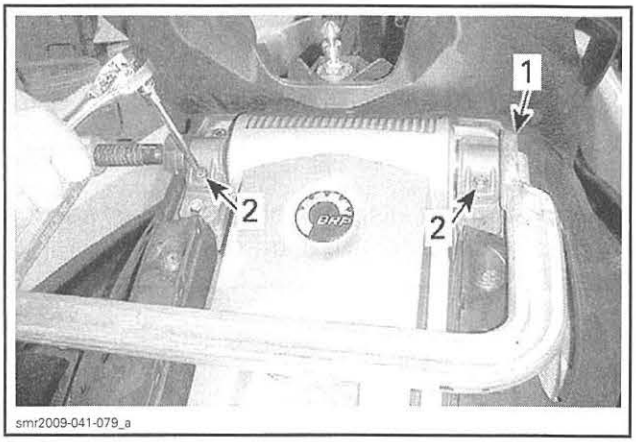

1. Bar clamp
2. New socket screws

Removal of Rear Suspension Arm Lower Shaft

1. Open the boarding platform.
2. Remove bolts securing both rear suspension arm covers.

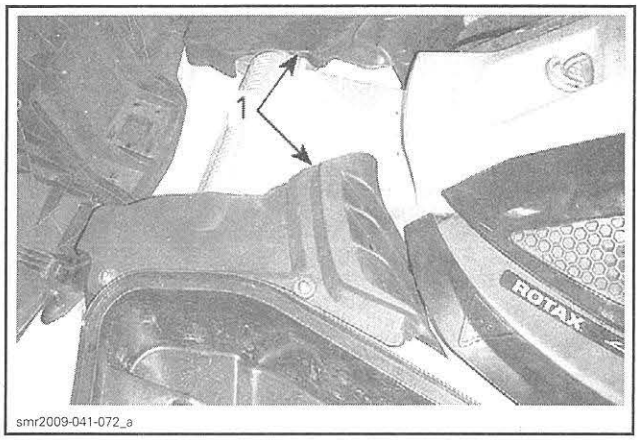

1. Rear suspension arm cover

3. Mark position of rear suspension arm brackets for proper reinstallation.
4. Remove and discard screws securing rear suspension arm to fixed deck.

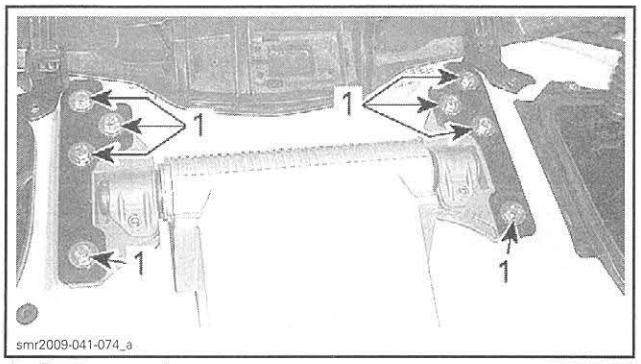

1. Rear suspension arm screws

5. Remove and discard socket screws securing rear brackets to arm shaft ends.

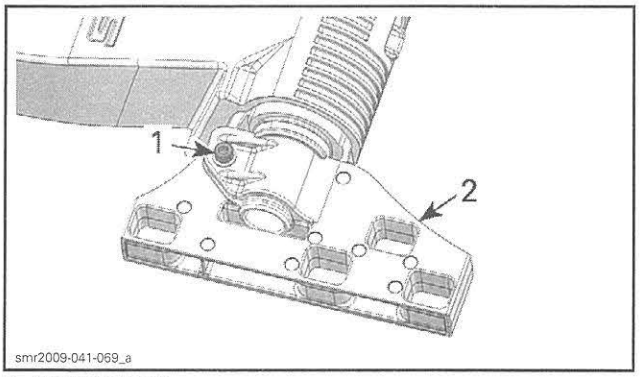

1. Socket screw
2. LH rear bracket

6. Press one rear bracket against the suspension arm bushing and remove the circlip. Repeat for the other side.

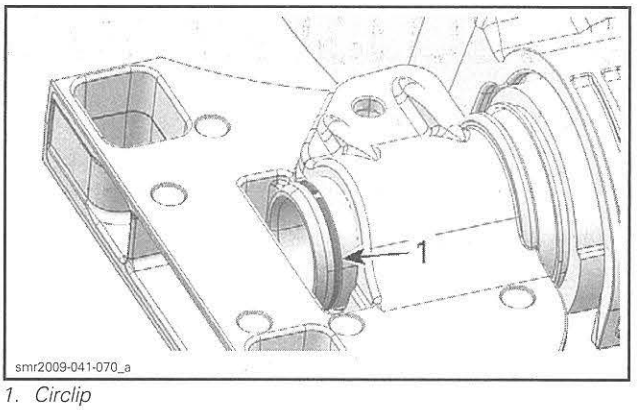

1. Circlip

Installation of Rear Suspension Arm Lower Shaft

1. When reassembly the rear bracket on shaft end, press bracket on bushing to install the circlip.
2. When both brackets are installed on shaft, pull brackets outside to position circlips against brackets.

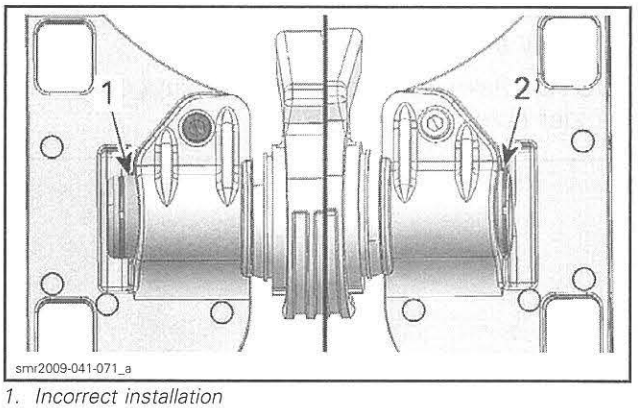

1. Incorrect installation
2. Proper installation

3. Lower the rear suspension arm on fixed deck.
4. Tighten **NEW** socket screws to specification.

TORQUE	
Lower shaft screws	10 N•m (89 lbf•**in**)

5. Refer to *REAR ARM* for reinstallation.

INTELLIGENT SUSPENSION (iS)

SERVICE TOOLS

Description	Part Number	Page
FLUKE 115 MULTIMETER	529 035 868	573–576
MAGNETO HARNESS 6 PINS	295 000 136	573
SUPERTANIUM DRILL BIT 3/16"	529 031 800	584

SERVICE PRODUCTS

Description	Part Number	Page
DIELECTRIC GREASE	293 550 004	567
LOCTITE 243 (BLUE)	293 800 060	581–582

FRONT SUSPENSION ARM AND HYDRAULIC PUMP

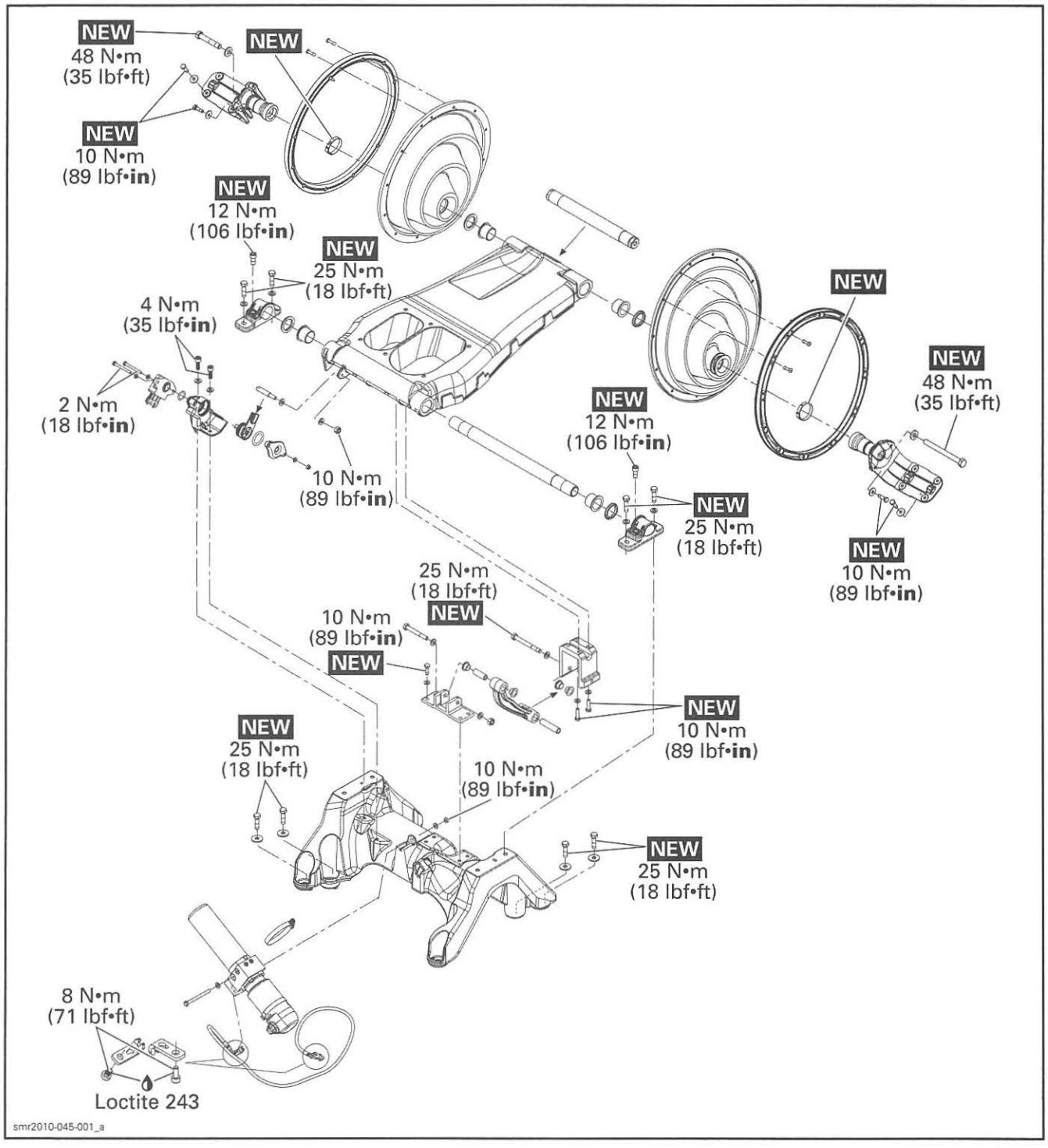

ACTUATOR AND SHOCK ABSORBER

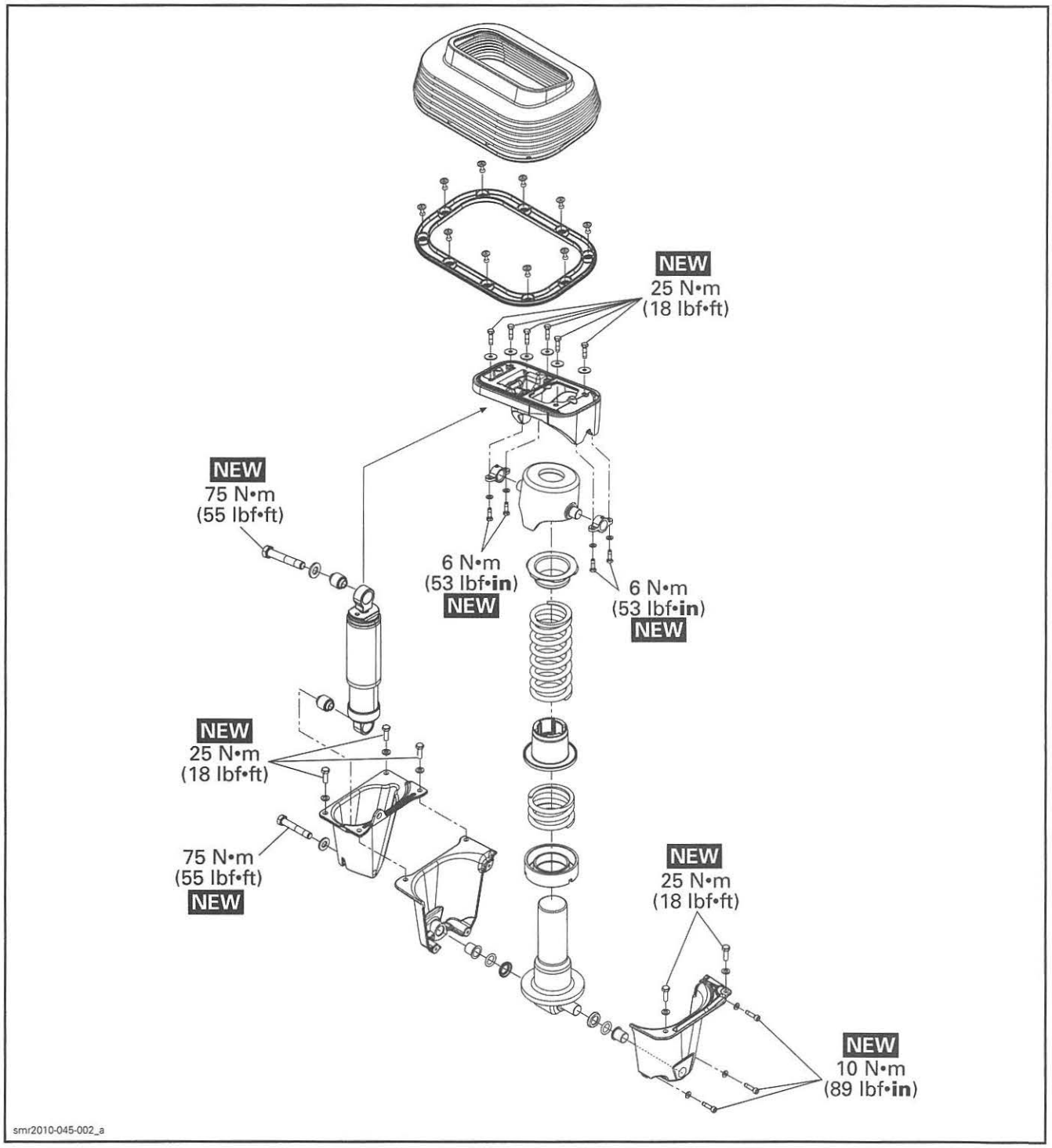

REAR SUSPENSION ARM

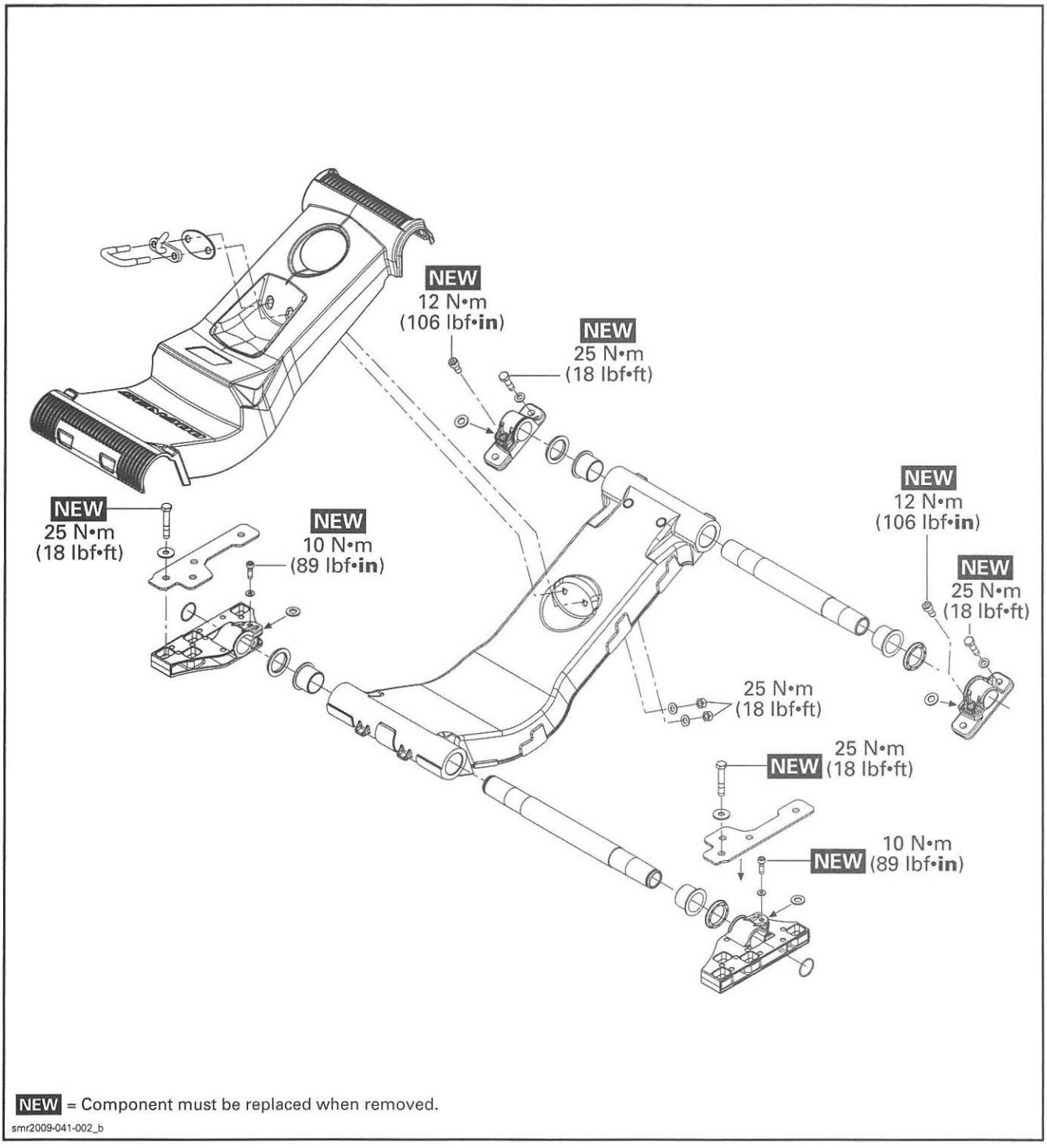

NEW = Component must be replaced when removed.

smr2009-041-002_b

GENERAL

NOTE: For a complete overview of the electrical system, refer to *POWER DISTRIBUTION AND GROUNDS* subsection.

It is highly recommended to disconnect the battery when replacing any electric or electronic component.

⚠ WARNING

Always disconnect battery exactly in the specified order, BLACK (-) cable first, RED (+) cable last. Always reconnect BLACK (-) cable last. Do not place tools on battery.

SYSTEM DESCRIPTION (COMPONENTS)

The intelligent suspension is a mechanical system composed of two springs and one shock absorber installed in the fixed deck which connects to the moving deck to isolate the riders from the rough water.

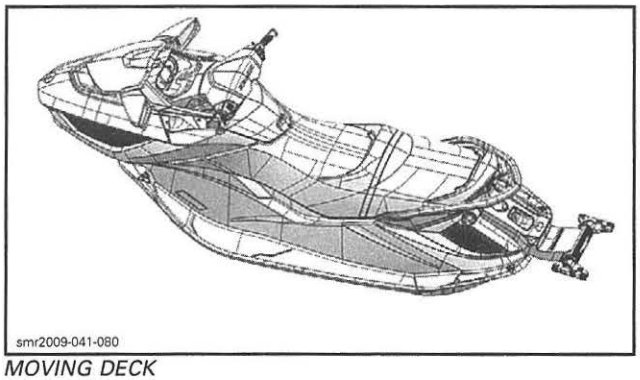

MOVING DECK

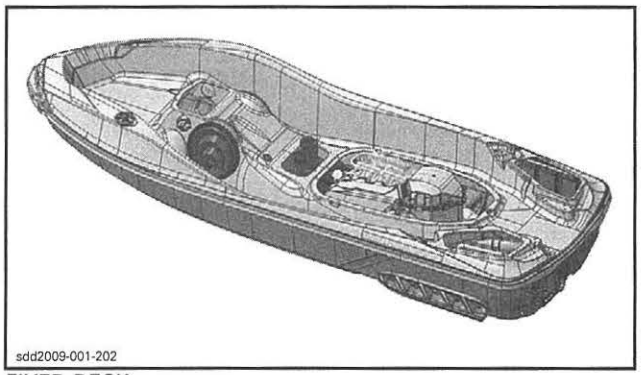

FIXED DECK

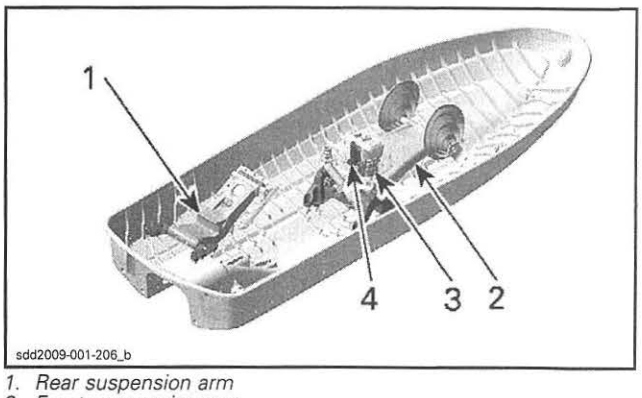

1. *Rear suspension arm*
2. *Front suspension arm*
3. *Springs*
4. *Shock absorber*

An actuator is mounted underneath the springs to control the spring preload and therefore the suspension height.

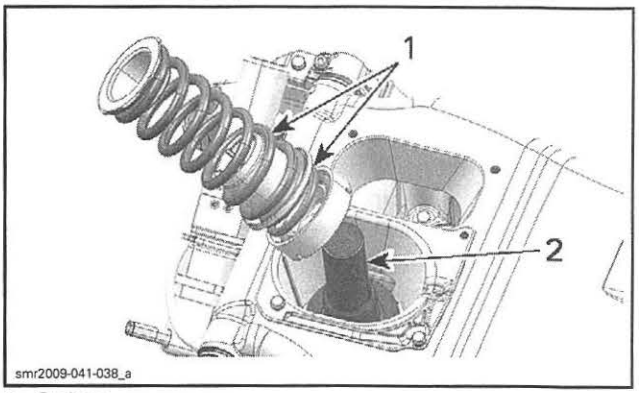

1. *Springs*
2. *Actuator*

The iS module controls the electric motor of the hydraulic pump to adjust the actuator height. It also sets the suspension height according to the active mode of operation and input signals.

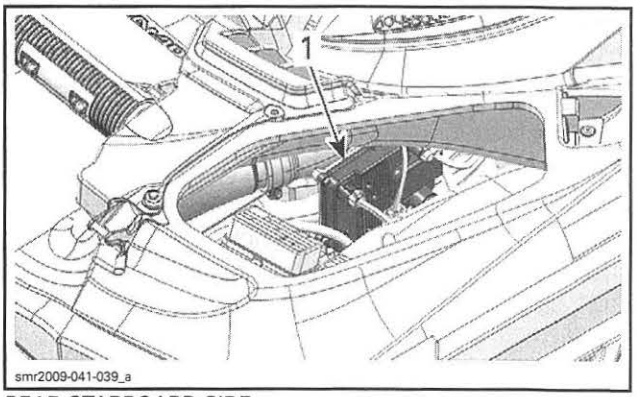

REAR STARBOARD SIDE
1. *iS module*

iS Module

The iS module communicates via CAN protocol with the multifunction gauge.

The iS module receives information from the multifunction gauge and a comparison is made with the input from the suspension position sensor. If the suspension is not in the proper position, the iS module will send an output signal to the hydraulic pump to either raise or lower the suspension to pre-programmed positions.

Suspension Position Sensor

The suspension position sensor is a potentiometer that sends a signal to the iS module which is proportional to the front suspension arm angle.

SYSTEM OPERATION

The intelligent suspension system (iS), allows the moving deck to move independently of the fixed deck, isolating rider and passenger(s) from the impact of rough water.

⚠ WARNING

Although the suspension system absorbs part of the vertical forces and therefore reduces the impact force to the body, it cannot eliminate it completely. To prevent you and your passenger from being bounced and eventually ejected from the watercraft, reduce your speed.

⚠ WARNING

Avoid riding in very rough waters or practicing extreme maneuvers like jumping wakes or waves.

The iS system provides multiple modes of operation.

Automatic Suspension Mode

The system always starts up in AUTOMATIC SUSPENSION mode and shuts down in DOCK mode.

The suspension will automatically move up to a factory preset height. This height is ideal for most riding conditions at cruising speeds.

The iS system constantly monitors the stroke of the suspension and automatically compensates for changing water conditions and passenger load.

The moving deck height proportionally elevates the center of gravity of the watercraft.

NOTE: When performing certain maneuvers at low speed the watercraft's propensity to overturn can increase.

Manual Suspension Mode

MANUAL SUSPENSION mode allows fine-tuning the suspension calibration to the operator's preference. The SUSPENSION HEIGHT can be adjusted using the UP or DOWN button while in IS MODE.

SUSPENSION HEIGHT can be adjusted a total of nine increments.

NOTE: Changing the suspension height using the UP/DOWN buttons puts the iS system in MANUAL SUSPENSION mode. The AUTO mode is deactivated.

Manually Adjusting Ride Height

While in IS MODE, press the UP or DOWN button once to move the suspension to the next height increment, or press and hold the button until the desired ride height is obtained.

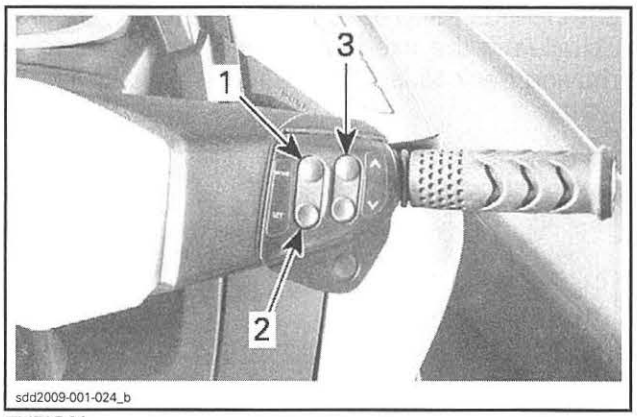

TYPICAL
1. *MODE*
2. *SET*
3. *UP and DOWN button*

The following indications of manual suspension mode can be observed in the digital screen of the information center:

- A scrolling message in the digital screen that states MANUAL SUSPENSION.
- The AUTO indication in the iS display will disappear.
- The suspension position indicator will indicate the relative SUSPENSION HEIGHT (only one segment of the indicator will be on).

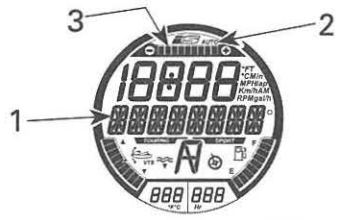

AUTOMATIC SUSPENSION MODE

1. MANUAL SUSPENSION message is displayed here
2. AUTO mode indicator OFF
3. Relative suspension position indication

Reverting Back to AUTO MODE

To revert back to AUTO selection mode without stopping the engine, proceed as follows:

- Press the MODE button repeatedly until the IS MODE message appears in the multifunction display.
- Press the SET button.
- A scrolling message in the multifunction display stating DOUBLE_CLICK_UP_FOR_AUTO_MODE appears.
- Double click on UP button.

The AUTO mode is confirmed by:

- A scrolling message in the digital screen stating AUTOMATIC SUSPENSION.
- The AUTO indication in the iS display will appear.
- All segments of the suspension position indicator will be on.

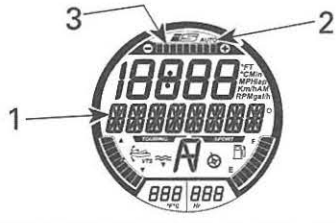

AUTOMATIC SUSPENSION MODE

1. AUTOMATIC SUSPENSION message is displayed here
2. AUTO mode indicator ON
3. All segments of suspension position indicator ON

Dock Modes

The iS system can be set to DOCK MODE AUTO or DOCK MODE OFF.

Dock Mode AUTO

In DOCK MODE AUTO, the suspension lowers to DOCK mode height to lower the center of gravity when certain conditions are met.

- When the engine is shut down after normal operation of the watercraft.
- If O.T.A.S. is activated *SEE ACTIVE TECHNOLOGIES (iCONTROL)*.
- If the operator releases the throttle to idle RPM for approximately 10 seconds.

NOTE: When the suspension moves down to dock mode height, a DOCK MODE ON message will scroll across in the multifunction display.

Dock Mode OFF

If the suspension is set to DOCK MODE OFF, the suspension will not lower itself to DOCK mode height when the throttle is released to idle for more than ten seconds. However, it will lower itself automatically when:

- The engine is shut off
- When O.T.A.S. is activated.

If the suspension is in the up position with the watercraft powered up and the DOWN button is double clicked while in the IS MODE, the suspension will lower itself to DOCK mode height even if the suspension is set to DOCK MODE OFF.

If the suspension is in the down position (dock mode height) with the watercraft powered up and the UP button is double clicked while in the IS MODE, the suspension will move up to the factory preset height.

⚠ WARNING

When performing certain maneuvers at low speed or when docking, the watercraft's propensity to overturn can increase. The more riders (or weight) on the moving deck, the more unstable the watercraft may become.

NOTE: DOCK MODE AUTO is always active when using a learning key.

Selecting DOCK MODE AUTO or DOCK MODE OFF

Selecting DOCK MODE AUTO or DOCK MODE OFF is only available when the engine is not running and when using a normal key.

To change the DOCK mode of operation, carry out the following steps.

1. Press the START/STOP button to power up the information center.

2. Install the tether cord on the engine cut-off switch.
3. Press the MODE button repeatedly until SETTINGS is displayed in the Information Center.



MESSAGE DISPLAYED
SETTINGS

4. Press the SET button to display DOCK MODE.

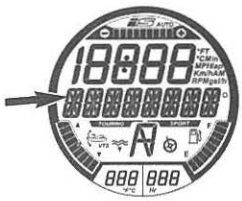

FIRST AVAILABLE MODE OPTION
DOCK MODE message is displayed here

5. Press the SET button to display DOCK MODE AUTO.

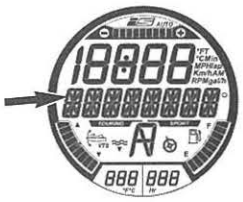

MODE ACTIVATED
DOCK MODE AUTO message is displayed here

6. Press the UP or DOWN button to toggle the display to DOCK MODE OFF.

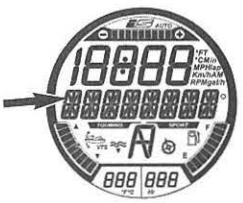

MODE DEACTIVATED
DOCK MODE OFF message is displayed here

7. Press the SET button, or wait for the function to time out to save the setting and return to main display.

You may now start the engine and drive away using the selected DOCK MODE.

⚠ CAUTION **Operating the watercraft in DOCK MODE OFF prevents the suspension from automatically moving to the "down" position when operating the watercraft at slow speed or when stopping. This maintains a higher center of gravity, reduces stability, and makes the watercraft more prone to overturning.**

TROUBLESHOOTING

DIAGNOSTIC TIPS

It is important to determine first if the problem is electrical or mechanical related. If you hear the hydraulic motor running when pressing the UP or DOWN button, check for related mechanical problem.

NOTE: It is a good practice to check for fault codes using B.U.D.S. software as a first troubleshooting step. If a problem occurs with the suspension, several fault codes pertaining to the suspension position sensor may be generated.

IMPORTANT: When troubleshooting an electrical system fault, check battery condition, cables and connections first.

Electrical System Activation

1. Press the START/STOP button.

NOTE: Pressing the START/STOP button without the D.E.S.S. key installed on its post will turn on electrical power without starting the engine; the information center will cycle through a self-test function and shut off its display after a few seconds. However, the electrical system will stay powered up for approximately three minutes after the START/STOP button was depressed.

2. Install D.E.S.S. key to activate ECM and the information center when testing procedures require the device or system to be supplied with electrical power.

NOTE: When using B.U.D.S., **briefly** press the START/STOP button to initiate back the communication after the electrical system has shut off.

Circuit Testing

Check the related-circuit fuse condition with a fuse tester or test light (relying solely on a visual inspection could lead to an incorrect conclusion).

Electrical Connection Inspection

When replacing an electric or electronic component, always check electrical connections. Make sure they are tight, make good contact, and are corrosion-free. Dirty, loose or corroded contacts are poor conductors and are often the source of a system or component malfunction.

Pay particular attention to ensure that pins are not bent or pushed out of their connectors.

Ensure all wire terminals are properly crimped on wires, and connector housings are properly fastened.

Check for signs of moisture, corrosion or dullness. Clean pins properly and coat them with DIELECTRIC GREASE (P/N 293 550 004) or other appropriate lubricant (except if otherwise specified) when reassembling them.

Pay attention to the ground wire connections. Make sure they are clean, tight and free of corrosion.

DIAGNOSTIC GUIDELINES

The following is provided to help in diagnosing the probable source of troubles. It is a guideline and it should not be assumed to list all possible problems.

SUSPENSION DOES NOT MOVE

1. Check gauge display for iS informations.
   - *No information, refer to the diagnostic flow chart (electrical) in this subsection.*
   - *iS information appears, refer to the diagnostic flow chart (hydraulic/mechanical) in this subsection.*

SUSPENSION DOES NOT LOWER IN DOCK MODE POSITION

1. Something stuck under moving deck.
   - *Remove object(s) between moving deck and fixed deck.*
2. PWC is not level.
   - *Place PWC level*
3. Hydraulic fluid level too low.
   - *Refill hydraulic pump reservoir and check for leaks.*
4. Shock absorber is damaged.
   - *Replace shock absorber.*
5. Leak in hydraulic circuit.
   - *Repair or replace defective part(s).*
6. Faulty suspension position sensor.
   - *Test sensor and replace as required.*
7. Actuator is damaged.
   - *Replace the actuator.*
8. Hydraulic pump cannot build enough pressure.
   - *Replace hydraulic pump.*

SUSPENSION MOVES ERRATICALLY

1. Defective shock absorber.
   - *Replace the shock absorber.*
2. Broken spring(s).
   - *Replace spring(s).*

SUSPENSION NOISE (DURING A TURN)

1. Front or rear suspension arm shaft supports position.
   - *Supports must be flushe against both ends of shaft. Reposition shaft in its supports.*
2. Worn arm shaft bushings.
   - *Check front and rear arm shaft bushings condition and replace as required.*
3. Snap rings on both sides of the rear lower arm shaft are not properly positioned.
   - *Reposition shaft in its supports.*

SUSPENSION NOISE (FRONT OF SEAT)

1. Holder retaining screws are loose.
   - *Tighten shock absorber and actuator holder screws to recommended torque.*
2. Shock absorber screws are loose.
   - *Tighten shock absorber screws to recommended torque.*
3. Link under actuator holder loosened or not installed.
   - *Install link properly.*
   - *Tighten bolts to recommended torque.*

SUSPENSION IS LOWER THAN THE DOCK MODE POSITION

1. Spring (s) out of specification or broken.
   - *Replace the defective spring(s).*
2. Bump stops damaged or worn.
   - *Replace both bump stops.*

SUSPENSION BOTTOMS HARD

1. Spring(s) out of specification or broken.
   - *Replace the defective spring(s).*
2. Shock absorber is damaged.
   - *Check shock absorber resistance. Replace shock absorber.*
3. Bump stops damaged or worn.
   - *Replace both bump stops.*

SUSPENSION QUIT WORKING BUT MAY OPERATE MOMENTARILY AFTER RESTARTING THE ENGINE

1. Hydraulic pump current draw is too high.
   - *Check hydraulic pump.*
2. Internal problem within iS module.
   - *Replace iS module.*

DIAGNOSTIC FLOW CHARTS

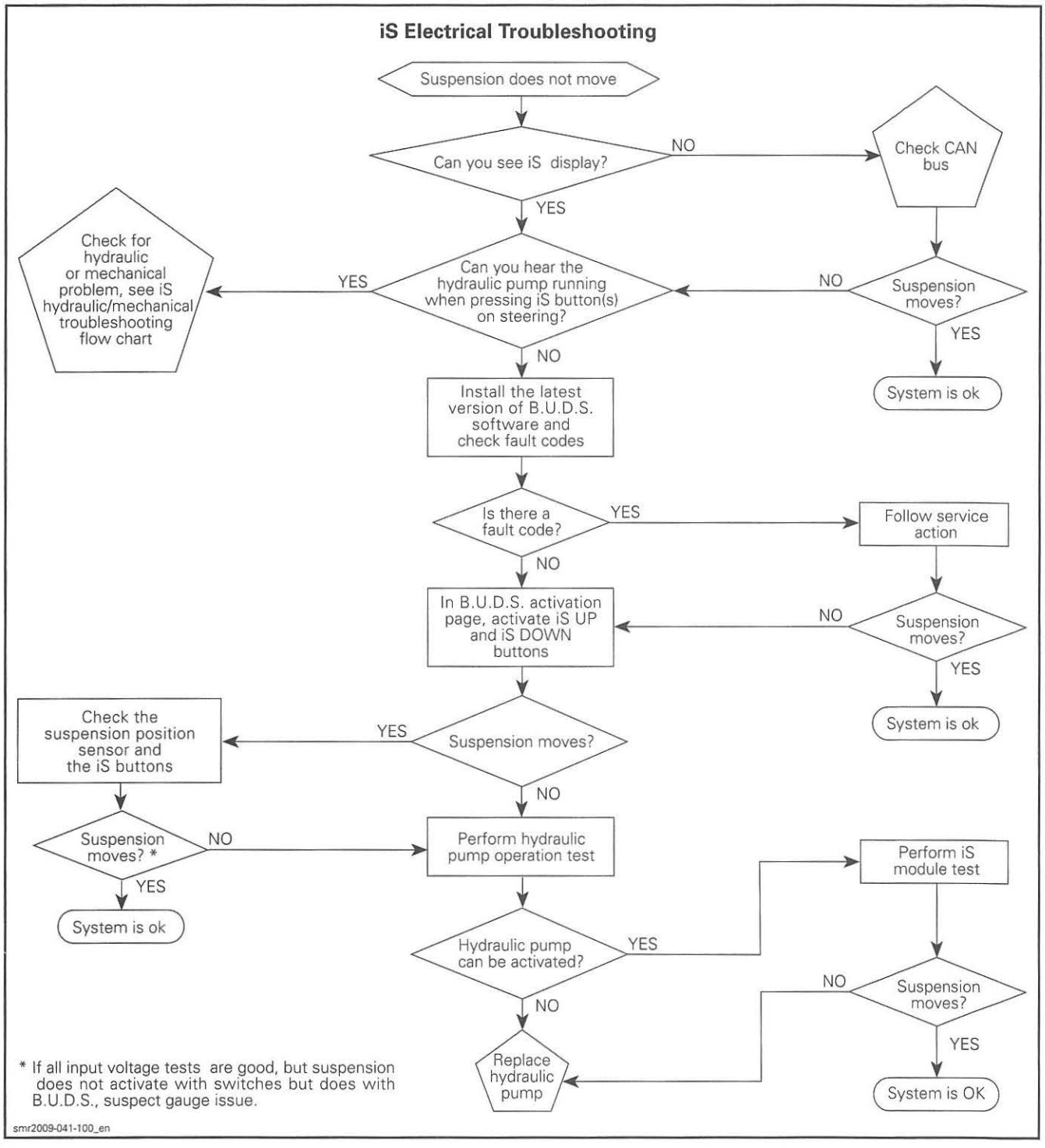

iS Hydraulic/Mechanical Troubleshooting

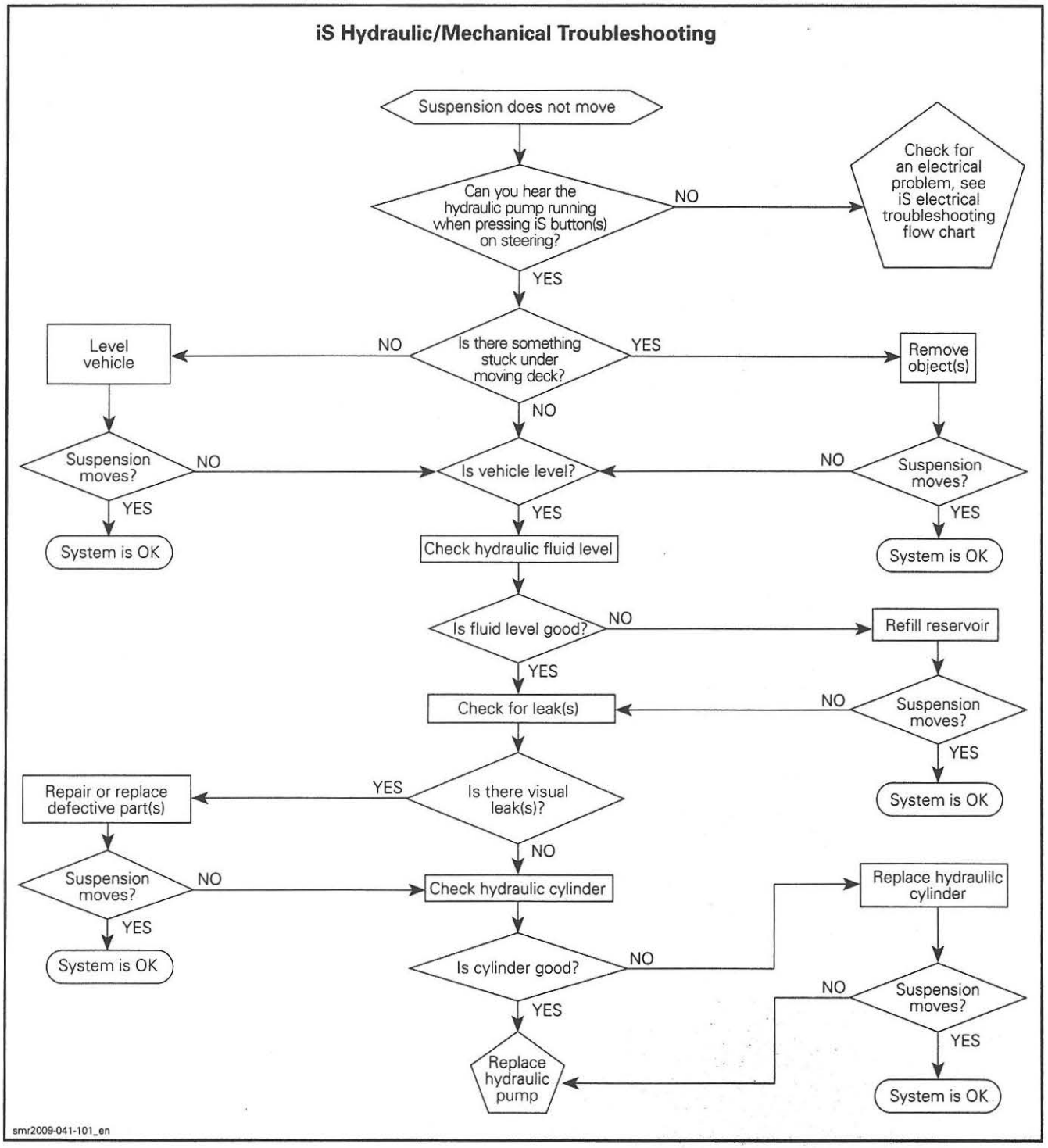

PROCEDURES

SHOCK ABSORBER

Shock Absorber Location

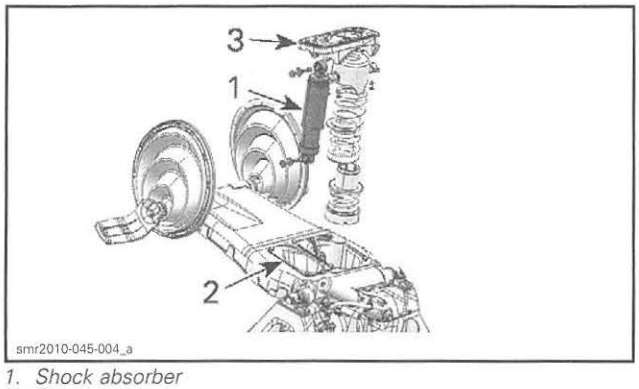

1. *Shock absorber*
2. *Shock holder*
3. *Mounting plate*

Shock Absorber Removal

1. Remove the moving deck. Refer to *BODY* subsection.
2. Remove tapes securing central bellows to mounting plate.
3. Move down central bellows to reach shock holder screws.
4. Remove and discard the four screws securing the shock holder.

NOTE: Using lateral supports, raise front arm to reach front screws.

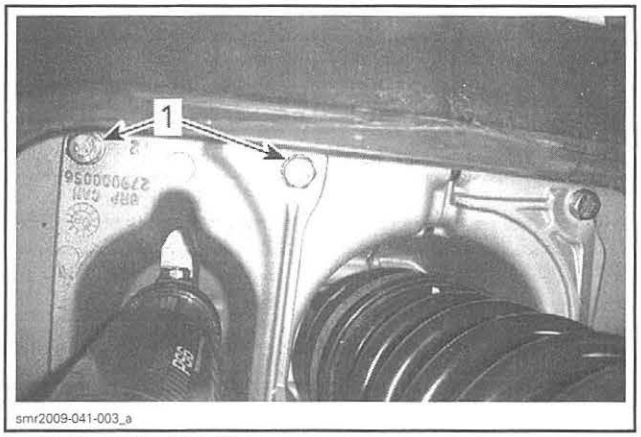

1. *Front retaining screws*

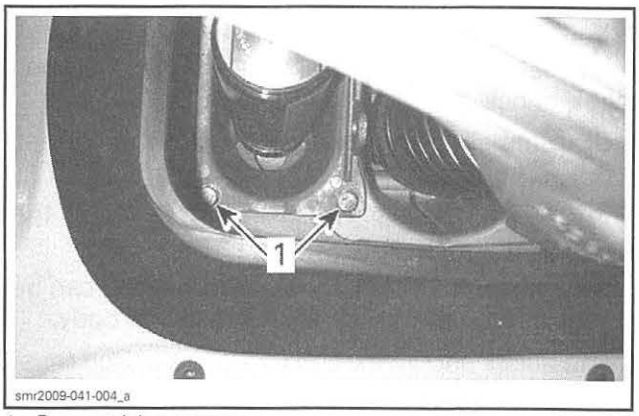

1. *Rear retaining screws*

5. Remove shock absorber with mounting plate and shock holder.

NOTE: Take care not to let the spring protector fall into the hull.

6. Remove and discard the screw securing shock absorber to shock holder.

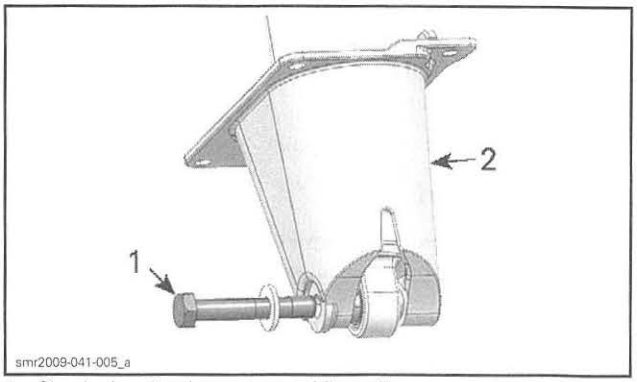

1. *Shock absorber lower screw (discard)*
2. *Shock holder*

7. Detach the top of shock absorber from mounting plate. Discard screw.

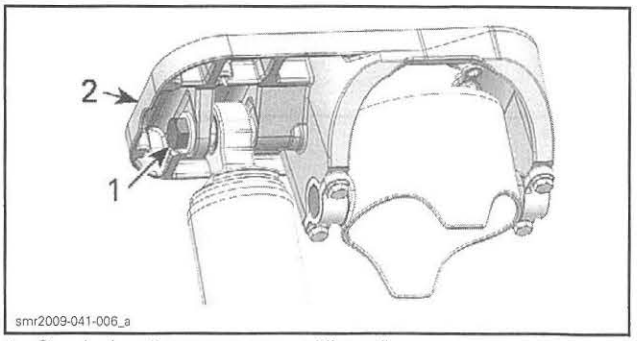

1. *Shock absorber upper screw (discard)*
2. *Mounting plate*

Shock Absorber Inspection

NOTE: Because of gas pressure, strong resistance is felt when compressing shock.

To inspect shock operation, or if suspecting an internal leak between oil chamber and gas chamber, check shock as follows:

1. Grab the shock absorber body firmly and press the rod end against a firm surface.
   1.1 Verify the compression stroke when the rod is fully extended.
   1.2 Make sure that shock absorber rod can be completely inserted in the shock body.
2. The shock should extend unassisted. Rod must come out at a steady speed.

If any problem is detected, replace the shock absorber.

Shock Absorber Installation

The installation is the reverse of the removal procedure. However, pay attention to the following.

Secure the shock absorber using **NEW** screws.

Tighten screws to 75 N•m (55 lbf•ft).

Install **NEW** shock holder screws and tighten them to 25 N•m (18 lbf•ft).

SPRINGS

Spring Location

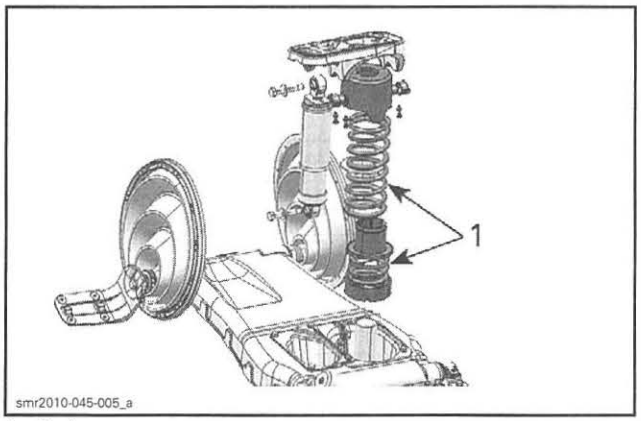

1. Springs

Spring Removal

1. Remove *SHOCK ABSORBER*, see procedure in this subsection.
2. Remove the spring protector, the long spring, the spacer, the short spring and the spring holder.

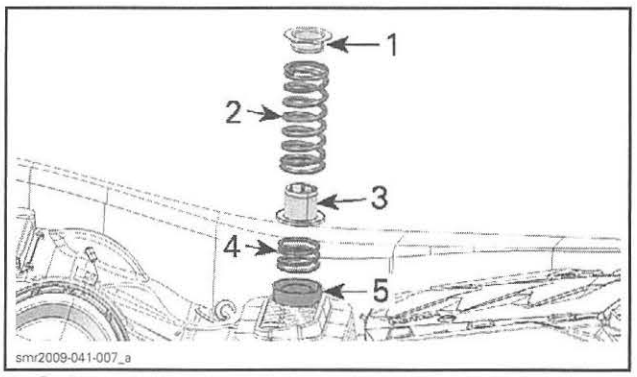

1. Spring protector
2. Long spring
3. Spacer
4. Short spring
5. Spring holder

Spring Inspection

Inspect both springs and replace if one of the following damage is detected:

- Crack in the paint
- Rust
- Other visible damage.

NOTE: If rust is limited to a 1/4 of the first coil, the spring should not be replaced.

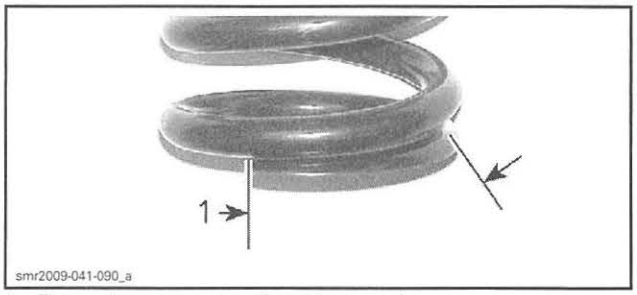

1. Zone where presence of rust is normal

Check the curve line of the long spring.

LONG SPRING SHAPE	
Maximum	7 mm (9/32 in)

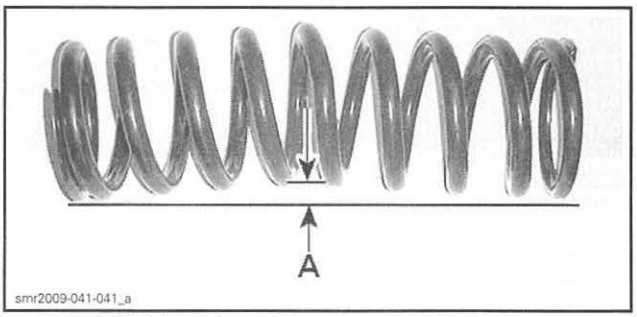

A. 7 mm (9/32 in) maximum

Replace spring if out of specification.

Spring Installation

The installation is the reverse of the removal procedure.

SUSPENSION POSITION SENSOR

Suspension Position Sensor Location

The suspension position sensor is located on suspension base, under the hydraulic pump reservoir.

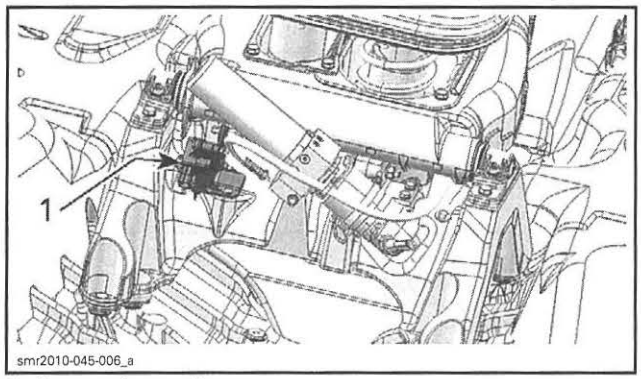

1. Suspension position sensor

Suspension Position Sensor Input Voltage Test

At Sensor Connector

SUSPENSION POSITION SENSOR CONNECTOR		VOLTAGE
Pin 1	Pin 2	5 Vdc

Using the 6-pin Magneto Harness Tool

1. Connect B.U.D.S. Refer to *COMMUNICATION TOOLS AND B.U.D.S.* subsection.
2. Using B.U.D.S., raise suspension to the fully up position.

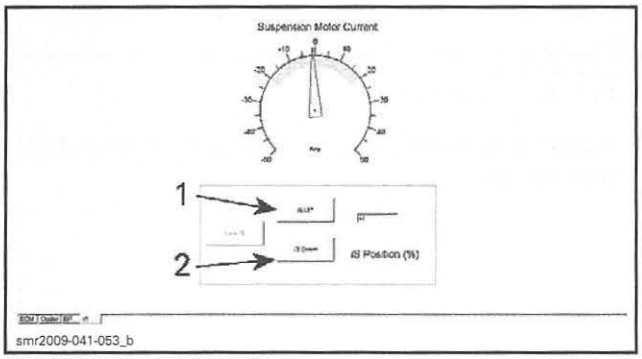

ACTIVATION AND iS TABS
1. UP
2. Down

NOTE: If the seat is moving up and the number does not increase in B.U.D.S. but it is between 10 and 100%, check the suspension position sensor fork.

3. Unplug the 6-pins connector from the iS module. The module is located in front of the battery in the same compartment.

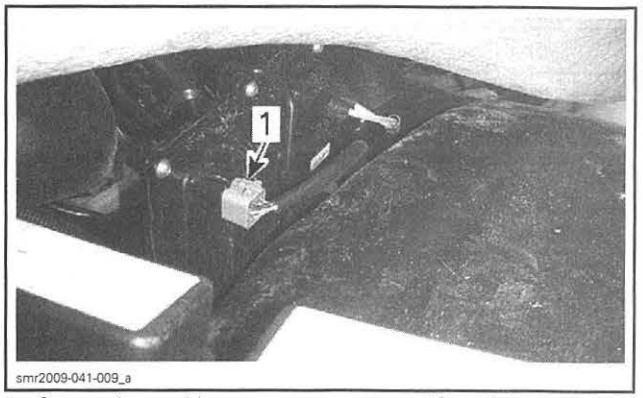

1. Suspension position sensor connector on iS module

4. Connect the MAGNETO HARNESS 6 PINS (P/N 295 000 136) to iS module for voltage checks.

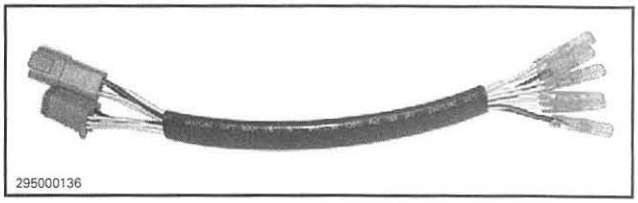

5. Using the FLUKE 115 MULTIMETER (P/N 529 035 868), check voltage as per the following table.



SUSPENSION POSITION (% in B.U.D.S.)	MAGNETO HARNESS (wire lead color)		VOLTAGE (Vdc)
All positions	BK	BK/YL	4.99
100%	WH	BK/YL	3.23
100%	BK	WH	1.75
88%	WH	BK/YL	3.09
88%	BK	WH	1.89
75%	WH	BK/YL	2.99
75%	BK	WH	1.98
53%	WH	BK/YL	2.81
53%	BK	WH	2.16
35%	WH	BK/YL	2.68
35%	BK	WH	2.30

6. Remove the 6-pin magneto harness tool.

Suspension Position Sensor Resistance Test

At iS Module Connector

1. Using the FLUKE 115 MULTIMETER (P/N 529 035 868), check resistance values on iS connector as per the following table.



SUSPENSION POSITION (% in B.U.D.S.)	iS MODULE (6-pin connector)		RESISTANCE Ω
All positions	4	6	1803 - 2203
100%	5	6	1957 - 2391
100%	4	5	1361 - 1663
88%	5	6	1904 - 2327
88%	4	5	1410 - 1724
75%	5	6	1871 - 2287
75%	4	5	1448 - 1770
53%	5	6	1799 - 2199
53%	4	5	1516 - 1852
35%	5	6	1752 - 2142
35%	4	5	1565 - 1913

Suspension Position Sensor Replacement

1. Remove the deck extension. Refer to *BODY* subsection.
2. Remove the air intake tube. Refer to *AIR INTAKE SYSTEM* subsection.
3. Unplug the suspension position sensor connector.

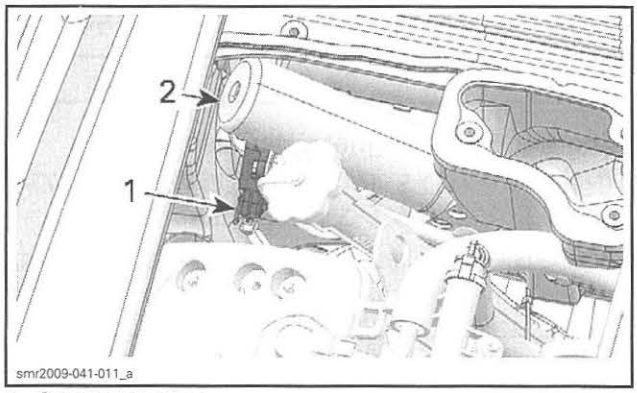

1. Sensor connector
2. Hydraulic pump reservoir

4. Remove screws securing the suspension position sensor.

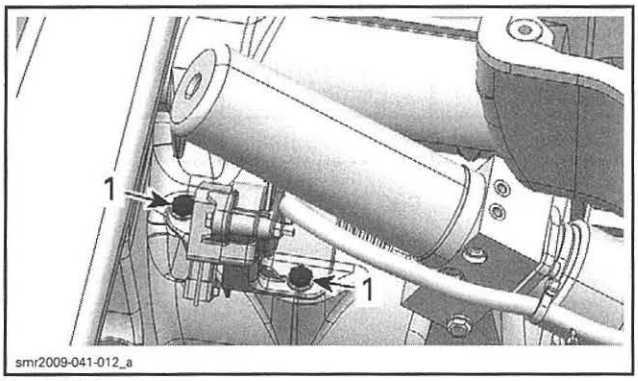

1. Retaining screws

5. Remove bolts securing the sensor and its cover to the sensor support and the sensor lever.

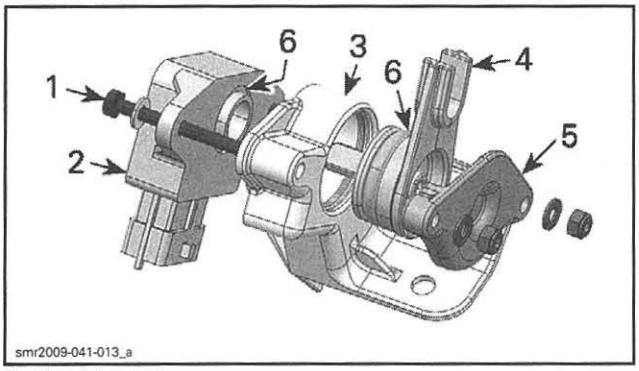

1. Retaining bolt
2. Sensor
3. Support
4. Lever
5. Cover
6. O-rings

NOTE: If water is present in the sensor always replace sensor even if it seems in good condition.

6. Check condition of O-rings on sensor and sensor lever.

7. Reinstall all parts.

NOTE: When reassembling parts, index sensor lever shaft with sensor inner slot. The sensor lever must be positioned to 180° with the sensor electrical connector.

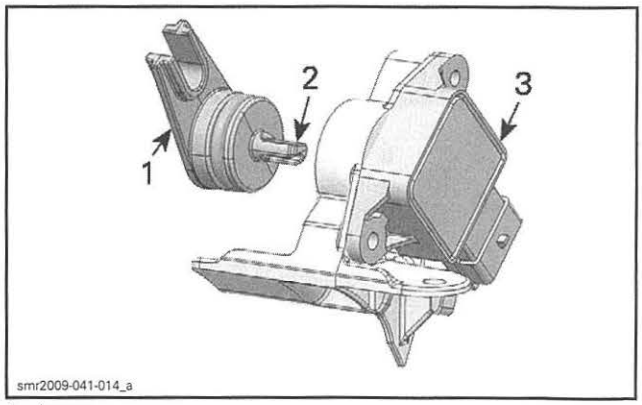

1. Lever
2. Lever shaft
3. Sensor

8. Reinstall and connect the sensor in PWC.

iS MODULE

iS Module Location

The iS module is located inside hull, in front of the battery.

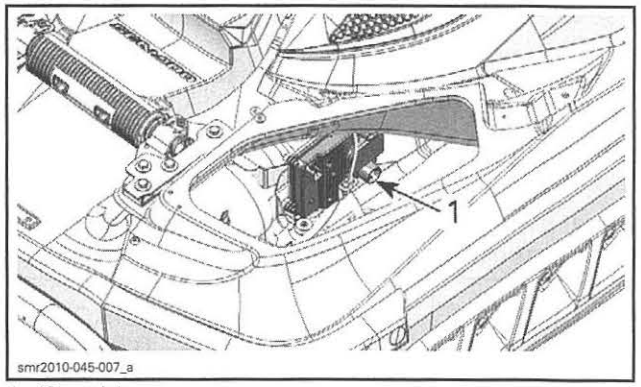

1. iS module

iS Module Input Voltage Test (Switched Power)

Make sure fuse F1 is powered and in good condition.

Press the START/STOP button to activate the electrical system.

Install the D.E.S.S. key.

Using the FLUKE 115 MULTIMETER (P/N 529 035 868), perform the following test.

MULTIMETER LEAD POSITION		VOLTAGE (VDC)
Pin 1 of iS module 6-pin connector	Negative battery post	Battery voltage

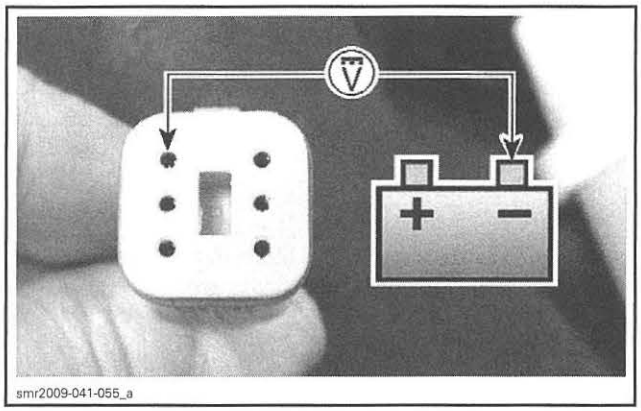

Repeat the test using a test light.

TEST LIGHT POSITION		RESULT
Pin 1 of iS module 6-pin connector	Negative battery post	Bright light

If tests succeed, carry out the *iS MODULE INPUT VOLTAGE TEST (BATTERY POWER).*

If tests fail, check wiring and connectors between fuse box pin A8 and module 6-pin connector pin 1.

iS Module Input Voltage Test (Battery Power)

Make sure fuse F7 is powered and in good condition.

Using the FLUKE 115 MULTIMETER (P/N 529 035 868), perform the following test.

iS MODULE 3-PIN CONNECTOR	BATTERY	VOLTAGE (VDC)
Pin 2	Negative post	Battery voltage

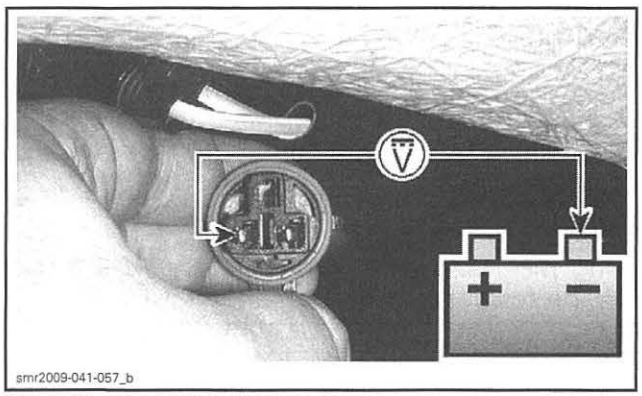

PIN 2 TO BATTERY NEGATIVE POST

Repeat the test using a test light.

iS MODULE 3-PIN CONNECTOR	BATTERY	RESULT
Pin 2	Negative post	Bright light

If tests succeed, carry out *iS MODULE GROUND TEST.*

If tests fails, check wiring and connectors between fuse box pin A2 and module 3-pin connector pin 2.

iS Module Ground Test

Using the FLUKE 115 MULTIMETER (P/N 529 035 868), perform the following test.

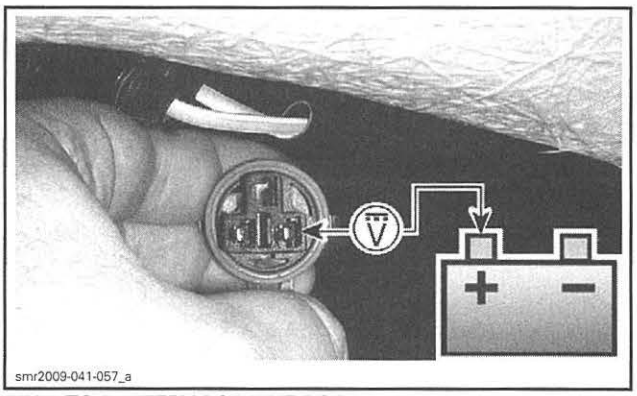

PIN 1 TO BATTERY POSITIVE POST

iS MODULE 3-PIN CONNECTOR	BATTERY	RESULT
Pin 1	Positive post	Battery voltage

Repeat the test using a test light.

iS MODULE 3-PIN CONNECTOR	BATTERY	RESULT
Pin 1	Positive post	Bright light

If tests succeed, carry out *iS BUTTON TEST USING B.U.D.S.*

If tests fails, check wiring and connectors module 3-pin connector pin 1 and engine ground.

iS Module Output Voltage Test

At the hydraulic pump motor connector, connect multimeter leads.

Activate the iS either UP and DOWN with B.U.D.S. or with the UP or DOWN buttons.

There will be either a positive 12 Vdc or a negative 12 Vdc reading.

Activate the opposite UP or DOWN and the reading should reverse polarity.

If the voltage is as specified, carry out the same test using a 12 V test light to ensure the circuit can supply enough current to operate the hydraulic pump.

The light should be bright in both the UP or DOWN positions.

If tests fail, carry out the *iS MODULE INPUT VOLTAGE TEST (SWITCHED POWER)*.

iS Module Removal

1. Open boarding platform and remove the starboard storage bin.
2. Disconnect the suspension position sensor connector from the iS module.

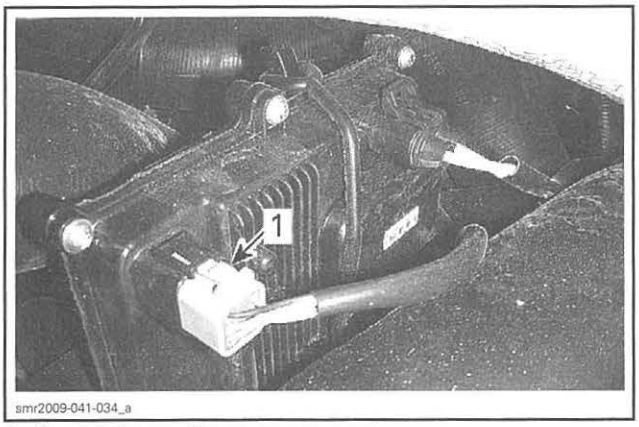

1. Suspension position sensor connector

3. Detach the retaining strap.

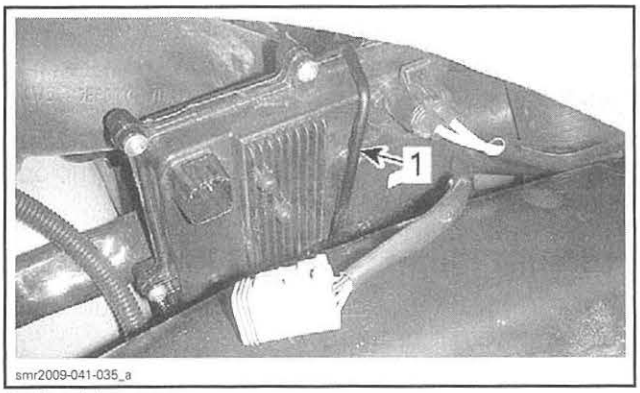

1. Retaining strap

4. Disconnect the hydraulic motor connector.

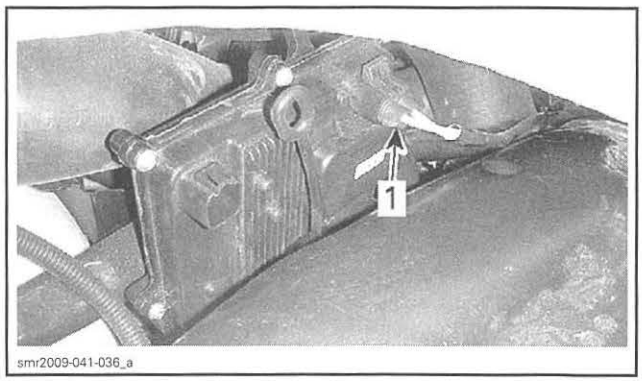

1. Hydraulic motor connector

5. Disconnect the iS module input voltage connector.

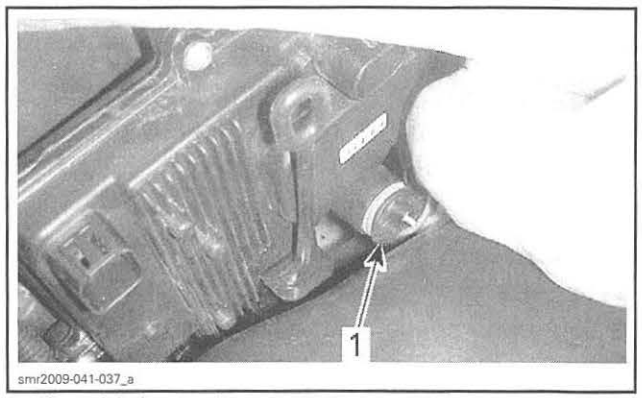

1. iS module input voltage connector

NOTE: The locking tab of input voltage connector is located underneath.

6. Remove the iS module from PWC.

iS Module Installation

The installation is the reverse of the removal procedure.

HYDRAULIC PUMP

Hydraulic Pump Location

The hydraulic pump is located at the rear of the suspension base.

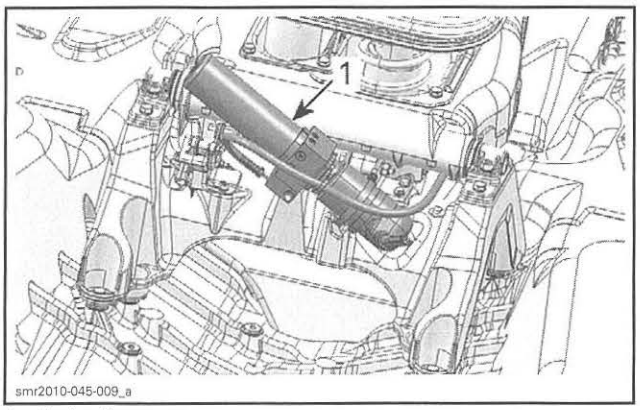

1. Hydraulic pump

Hydraulic Pump Recommended Fluid

Always use automatic transmission fluid (ATF) Dexron III.

NOTICE **Use ATF Dexron III only. Do not use fluids other than the recommended one, nor mix different types of fluids.**

Hydraulic Pump Fluid Level Verification

NOTE: The fluid level will drop slightly during break-in period because the actuator uses a small amount of fluid to lubricate its moving parts. If a large amount of fluid is required, check components for leaks.

Reservoir in Vehicle

Place the PWC level (longitudinally and transversely). Make sure suspension is in DOCK MODE position.

The fluid should be near reservoir plug.

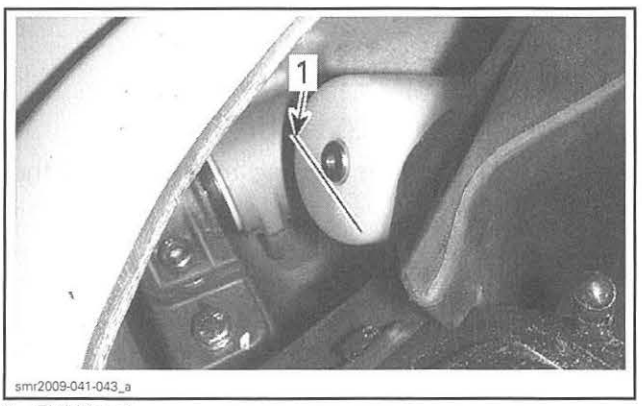

1. Fluid level

Reservoir Out of Vehicle

Place the reservoir vertically.

Using a ruler, measure the fluid level. The reservoir is full when fluid level reaches 130 mm ± 5 mm (5-1/8 in ± 13/64 in).

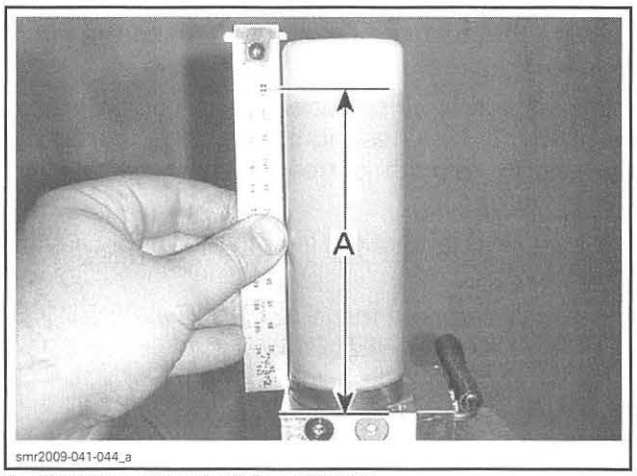

A. 130 mm ± 5 mm (5-1/8 in ± 13/64 in)

To Add Fluid

Remove the plug on the end of reservoir.

Using a syringe, fill up the reservoir to the recommended level.

Reinstall reservoir plug and tighten it to 1 N•m (9 lbf•**in**).

Hydraulic Pump Operation Test

Connect a 30 A fused jumper from a 12-volt battery positive terminal and one pin of the hydraulic pump 2-pin connector.

Connect a jumper from battery negative terminal and the other pin of the hydraulic pump 2-pin connector.

The hydraulic pump should activate and suspension should go up or down.

Reverse the jumpers position at the pump connector. The suspension should reverse direction.

If the hydraulic pump does not run, replace hydraulic pump.

If hydraulic pump turns, carry out the *HYDRAULIC PUMP CURRENT DRAW* test to confirm pump operation.

Hydraulic Pump Current Draw

If the current draw is to high, the iS module activates an internal protection.

Connect PWC to B.U.D.S. Refer to *COMMUNICATION TOOLS AND B.U.D.S.* subsection.

Select **ACTIVATION** and **iS** tabs.

Activate the suspension by pressing the UP and DOWN buttons and check monitor the ammeter in the B.U.D.S. page.

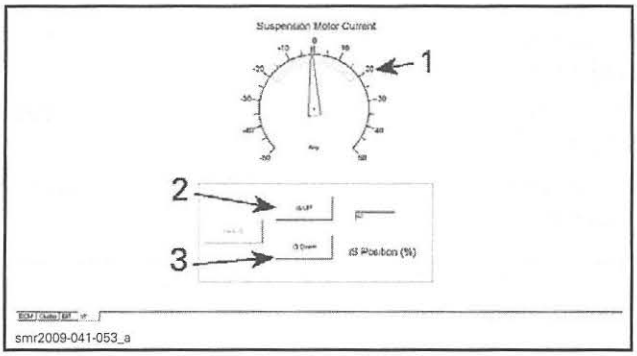

1. *B.U.D.S. page ammeter*
2. *UP button*
3. *DOWN button*

iS POSITION	CURRENT
UP	16 - 20 A
DOWN	15 - 18 A

If current is as per specification, carry out the *iS MODULE OUTPUT VOLTAGE TEST*.

If current draw is low, check connections and wires.

If the current draw is excessive, replace the hydraulic pump.

Hydraulic Pump Removal (as a Unit with Actuator)

To work on many parts of suspension system, the removal of the hydraulic pump and actuator as an unit is necessary.

1. Remove *SHOCK ABSORBER* and *SPRINGS*. See procedures in this subsection.
2. Unplug the hydraulic pump connector from the iS module.
3. Cut any locking ties securing the pump harness to PWC harness.
4. Remove clamp and bolt securing the hydraulic pump from suspension base.

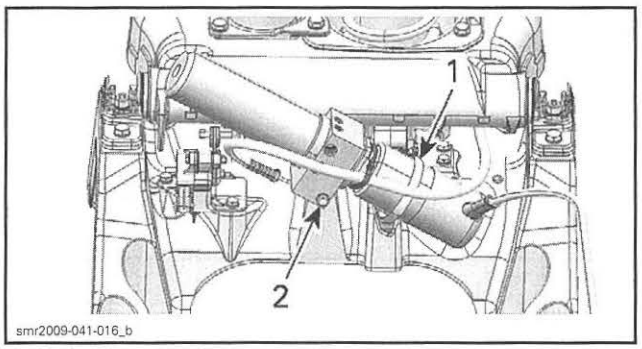

1. *Hydraulic pump clamp*
2. *Retaining bolt*

5. Remove actuator link bolt.

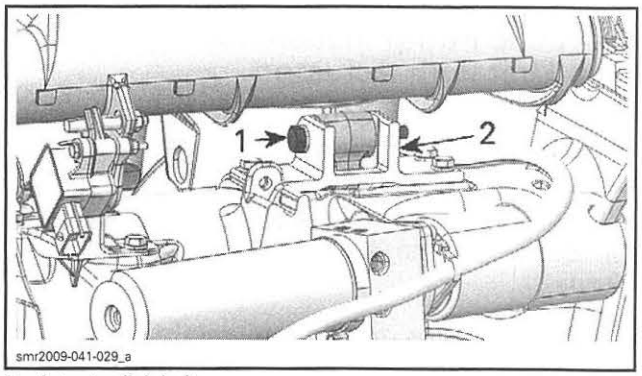

1. *Actuator link bolt*
2. *Link support on the top of suspension base*

6. Remove screws retaining the actuator holder.

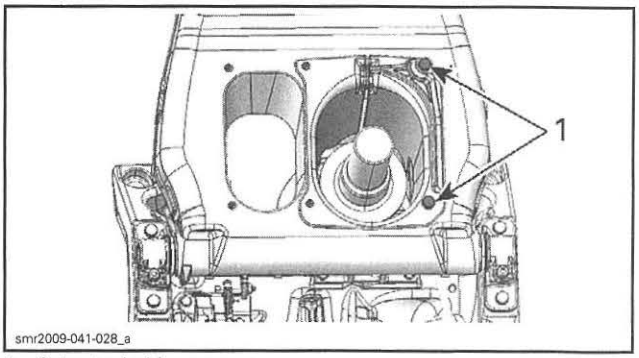

1. *Actuator holder screws*

7. Remove the suspension position sensor to avoid damaging it.
8. Remove screws securing both rear ends of front suspension arm to suspension base.

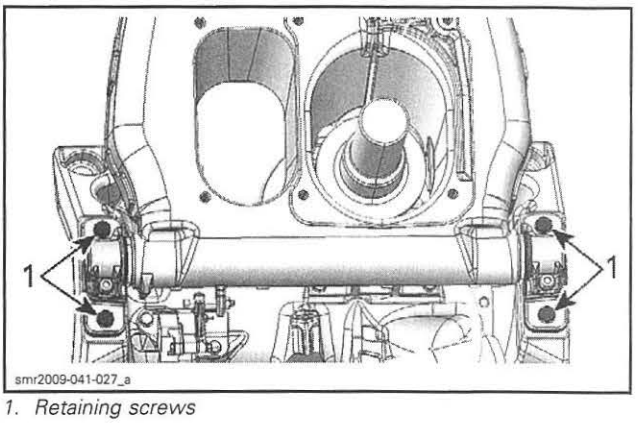

1. *Retaining screws*

9. Lift the rear of the front suspension arm to make room for hydraulic pump.
10. Remove hydraulic pump with actuator by lifting them through the suspension bellows opening.

Hydraulic Pump Installation (as a Unit with Actuator)

The installation is essentially the reverse of the removal procedure. However, pay attention to the following.

Make sure to secure the actuator link to suspension base. Tighten actuator link bolt to 25 N•m (18 lbf•ft).

NOTICE **Failure to do so might result in spring failure.**

Hydraulic hose routing is very critical to avoid problems with hydraulic unit. Use the following illustration to route and attach the hydraulic hose properly.

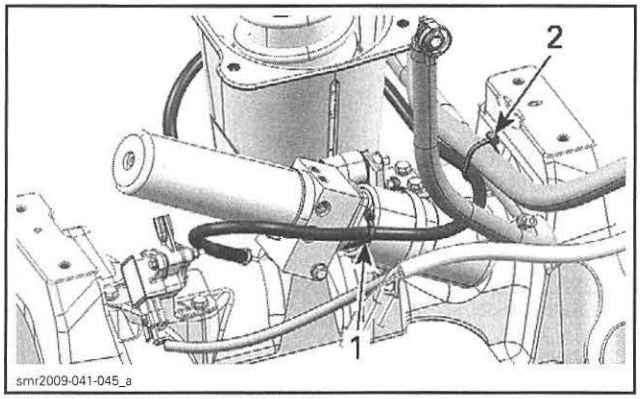

VIEW FROM THE REAR OF PWC
1. *Secure hydraulic hose to hydraulic pump*
2. *Secure hydraulic hose, fuel hose and PWC wiring harness*

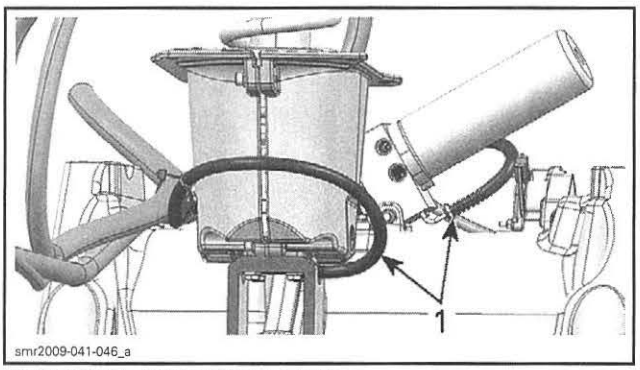

VIEW FROM THE FRONT OF PWC
1. *Position both ends of hydraulic hose on same side*

Install the *FRONT SUSPENSION ARM*. See procedure in this subsection.

Hydraulic Pump Removal (Without Actuator)

1. Remove the deck extension. Refer to *BODY* subsection.
2. Remove the air intake tube. Refer to *AIR INTAKE SYSTEM* subsection.
3. Unplug the hydraulic pump connector from the iS module.
4. Cut any locking ties securing the pump harness to PWC harness.
5. Cut locking tie securing the hydraulic hose to pump.

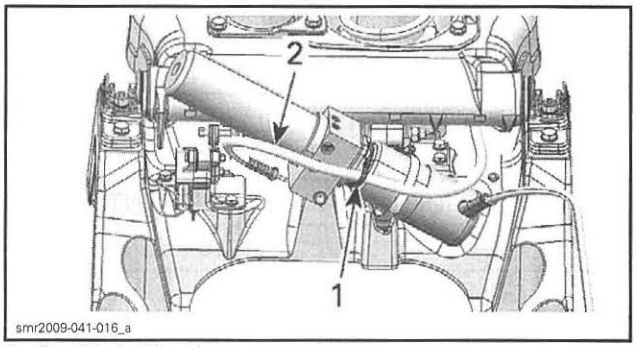

1. *Cut this locking tie*
2. *Hydraulic hose*

6. Unscrew the retaining clamp completely and remove it.

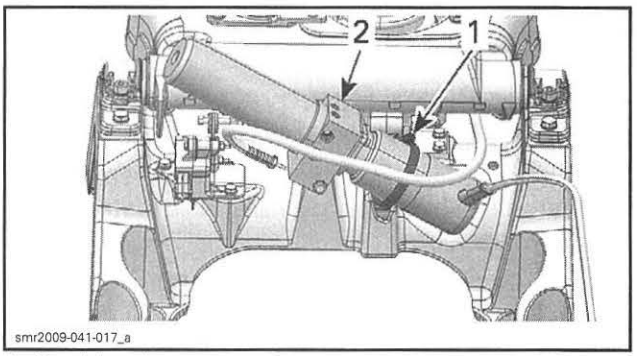

1. *Retaining clamp*
2. *Hydraulic pump*

7. Remove hydraulic pump retaining bolt.

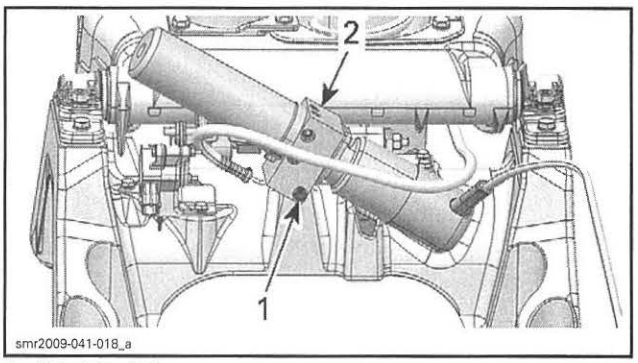

1. *Retaining bolt*
2. *Hydraulic pump*

8. At the bottom of pump housing, remove socket screw securing hydraulic hose lock.

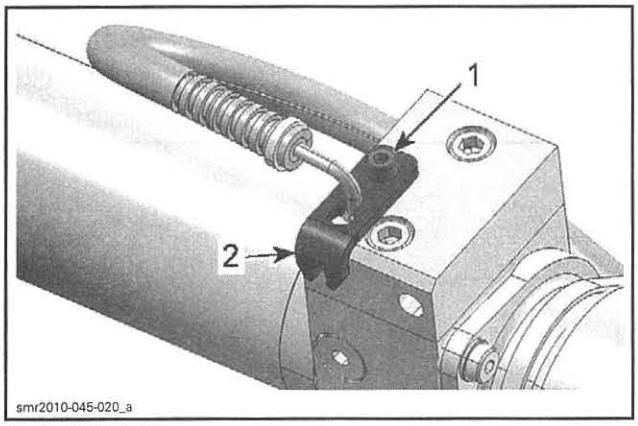

1. Socket screw
2. Hydraulic hose lock

9. Remove hose from pump and plug hose to avoid oil spillage.
10. Place your finger on pump opening and remove pump from PWC.

NOTE: Wipe any oil spillage.

Hydraulic Pump Installation (Without Actuator)

1. Install hydraulic hose on pump and secure hose using the hydraulic hose lock.

NOTE: The hose must turn freely. Do not insert hose into lock hook.

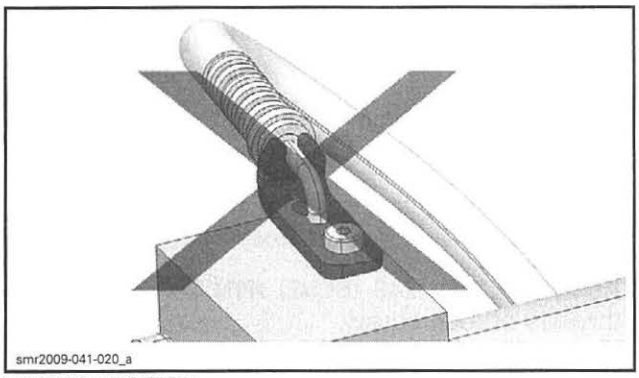

WRONG POSITION

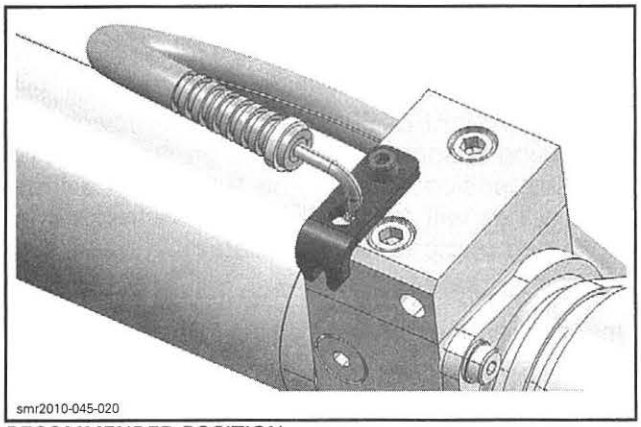

RECOMMENDED POSITION

2. Apply LOCTITE 243 (BLUE) (P/N 293 800 060) on threads of lock screw.
3. Tighten screw to 8 N•m (71 lbf•**in**).
4. Secure hydraulic pump to suspension base.
   4.1 Install pump retaining screw and tighten it to 10 N•m (89 lbf•**in**).
   4.2 Install retaining clamp and tighten it to 2 N•m (18 lbf•**in**).
5. Secure hose to reservoir with a new locking tie.
6. Route pump harness and secure it with new locking ties.
7. Connect the hydraulic pump connector to iS module.
8. Install a weight of 90 kg (200 lb) on moving deck and using suspension controls on steering, cycle the suspension fully up and fully down 3 times. This action will remove air bubbles trapped into hose and pump during installation.
9. Check for leaks.
10. Install all other removed parts.

ACTUATOR

Actuator Location

The actuator is located at the front of the suspension base under suspension springs.

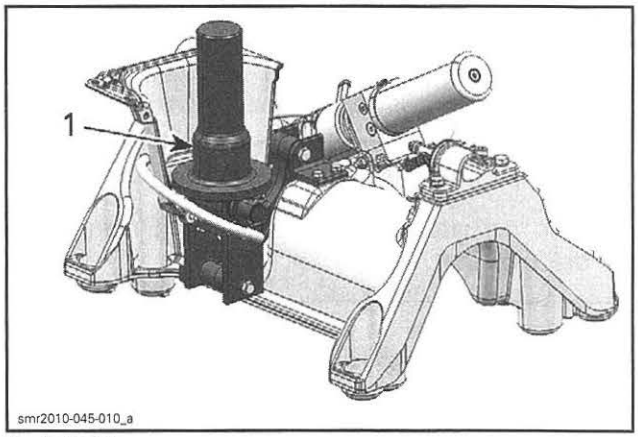

1. Actuator

Actuator Inspection

Check actuator for leaks at hose opening and around inner piston.

Replace actuator if any leak is detected.

Actuator Removal

1. Refer to *HYDRAULIC PUMP REMOVAL (AS A UNIT WITH ACTUATOR)* and remove the pump from the PWC.
2. Remove and discard the screw securing actuator link to alignment support.

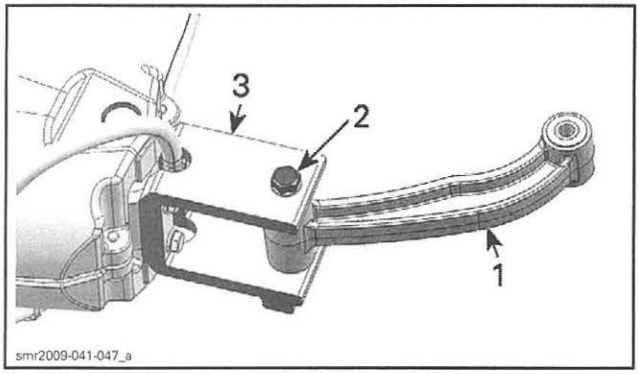

1. Actuator link
2. Retaining screw
3. Alignment support

3. Remove the alignment support from actuator holder. Discard screws.

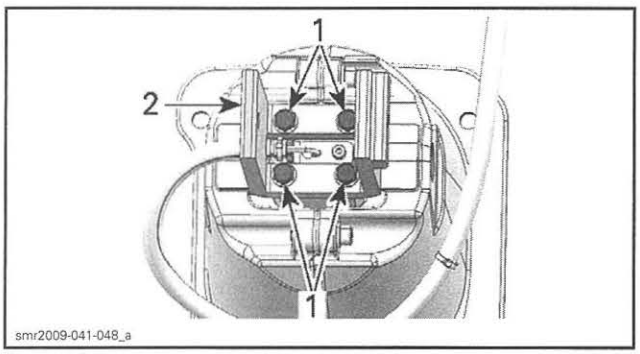

1. Retaining screws
2. Alignment support

4. Turn actuator up side down and remove hydraulic hose.

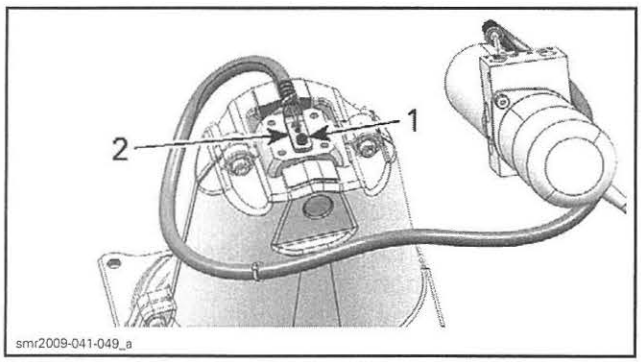

1. Retaining socket screw
2. Hydraulic hose lock

5. Remove and discard the three socket screws securing actuator holder halves and split the actuator holder.

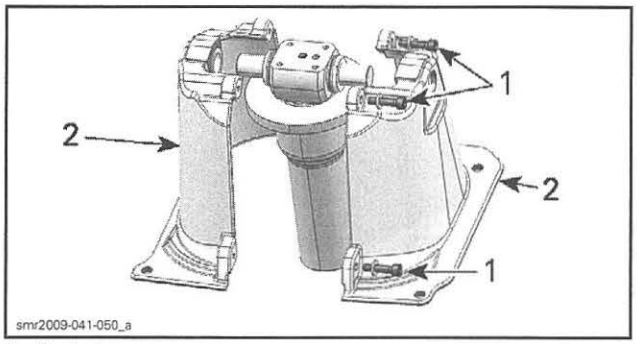

1. Socket screws
2. Actuator holder halves

Actuator Installation

The installation is the reverse of the removal procedure. However, pay attention to the following.

Install hydraulic hose in accordance with the following illustration.

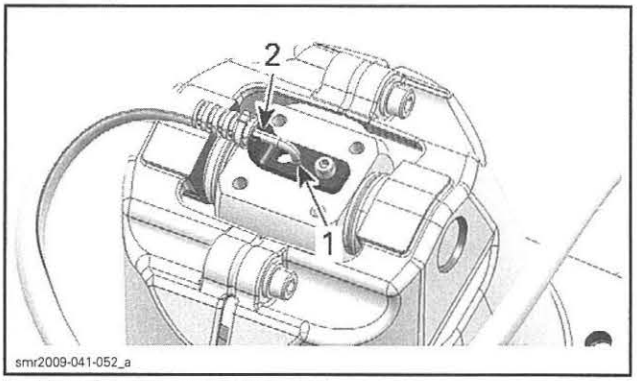

1. Hose fully inserted in lock slot
2. Position hydraulic hose in lock hook

Apply LOCTITE 243 (BLUE) (P/N 293 800 060) on threads of lock screw.

Tighten screw to 8 N•m (71 lbf•**in**).

Install the hydraulic pump in PWC. Make sure to route the hydraulic hose properly. See *HYDRAULIC PUMP INSTALLATION (AS A UNIT WITH ACTUATOR)* in this subsection.

Install a weight of 90 kg (200 lb) on moving deck and using suspension controls on steering, cycle the suspension fully up and fully down 3 times. This action will remove air bubbles trapped into hose and pump during installation.

Check for leaks.

Install all other removed parts.

LATERAL SUPPORT

Lateral Support Location

The lateral supports are located on both side of the fixed deck to support the moving deck.

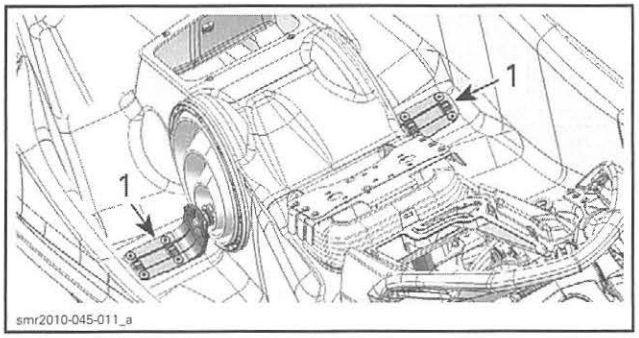

1. Lateral supports

Lateral Support Removal

NOTE: The following instruction can be used for RH or LH support.

1. Remove the moving deck. Refer to *BODY* subsection.
2. Cut the Oetiker clamp retaining lateral bellows to lateral support.

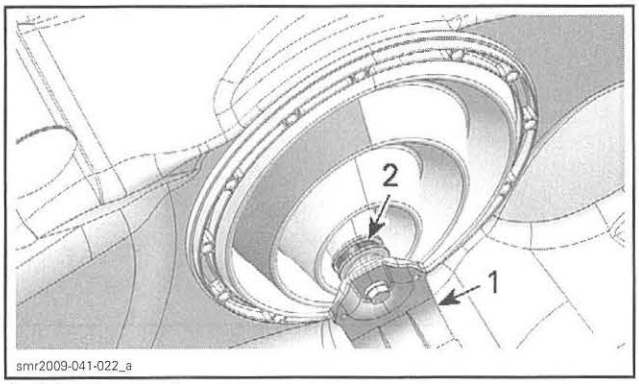

1. Lateral support
2. Oetiker clamp

3. Remove the lateral support screw.

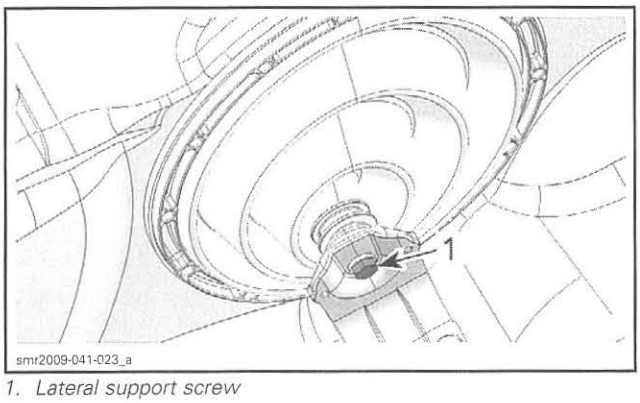

1. Lateral support screw

4. Remove lateral support from lateral bellows.

Lateral Support Installation

The installation is the reverse of the removal procedure. However, pay attention to the following.

Apply soapy water solution on bellows opening and insert the lateral support.

Index lateral supports with the front suspension shaft ends. Lateral supports can be inserted in one position only.

Tighten lateral support screw to 48 N•m (35 lbf•ft).

Install a new Oetiker clamp. Position the ear of clamp rearwards.

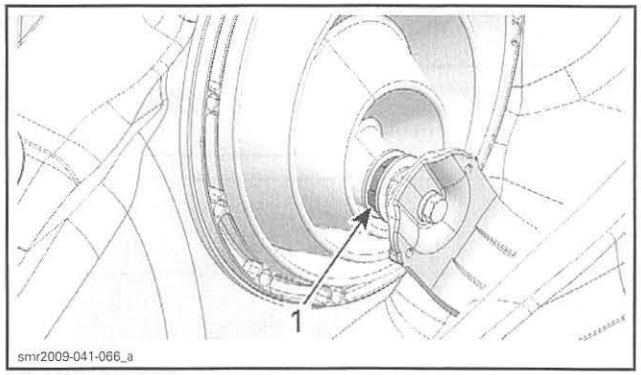

RH SIDE SHOWN
1. Ear of clamp rearwards

LATERAL BELLOWS

Lateral Bellows Location

The lateral bellows are located on each side of the fixed deck.

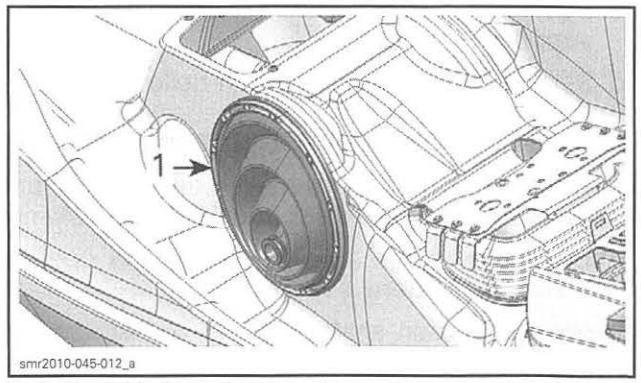

1. LH lateral bellows shown

Lateral Bellows Removal

1. Remove lateral support screw.

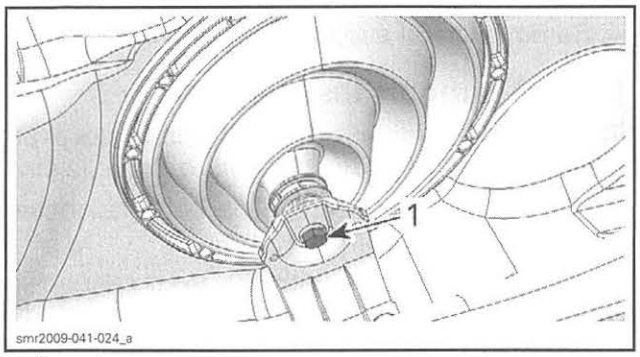

1. Lateral support screw

2. Disconnect lateral support from suspension shaft.
3. Using the SUPERTANIUM DRILL BIT 3/16" (P/N 529 031 800), remove all rivets (12) securing the lateral bellows ring to body.

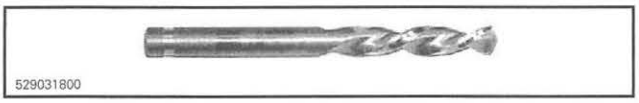

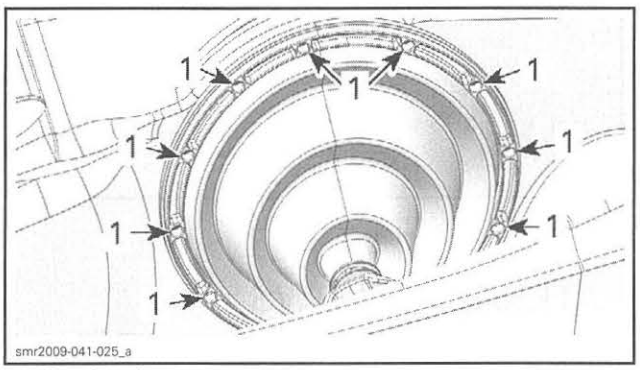

1. Rivet location

4. Remove lateral ring.
5. Cut Oetiker clamp securing bellows to lateral support.
6. Separate lateral support from bellows.

Lateral Bellows Installation

The installation is the reverse of the removal procedure. However, pay attention to the following.

Apply soapy water solution on bellows opening and insert the lateral support.

Index suspension shaft with the lateral support. The lateral support can be inserted in one position only.

Install the retaining ring. Align the ring pin with holes in bellows and body.

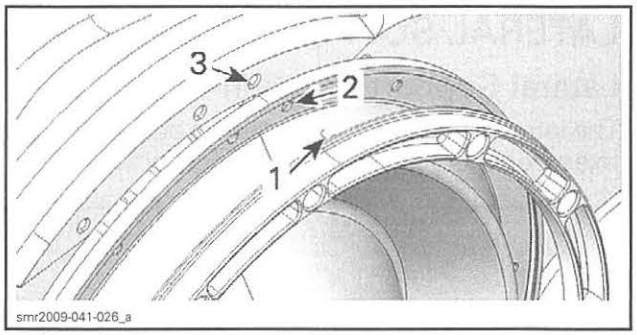

1. Ring pin
2. Bellows alignment hole
3. Body hole

Install new rivets. If the head of rivet tool cannot be inserted in ring opening, use the sleeve (P/N 707 000 181) to offset the rivet tool and well lean the rivet head against ring.

Index lateral supports with the front suspension shaft ends. Lateral supports can be inserted in one position only.

Tighten lateral support screw to 48 N•m (35 lbf•ft).

Install a new Oetiker clamp. Position the ear of clamp rearwards.

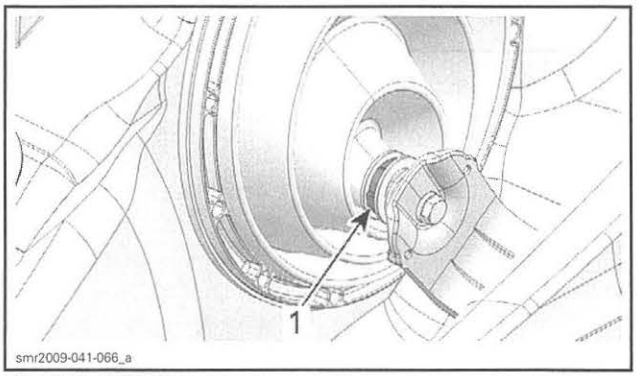

RH SIDE SHOWN
1. Ear of clamp rearwards

FRONT SUSPENSION ARM

Front Suspension Arm Location

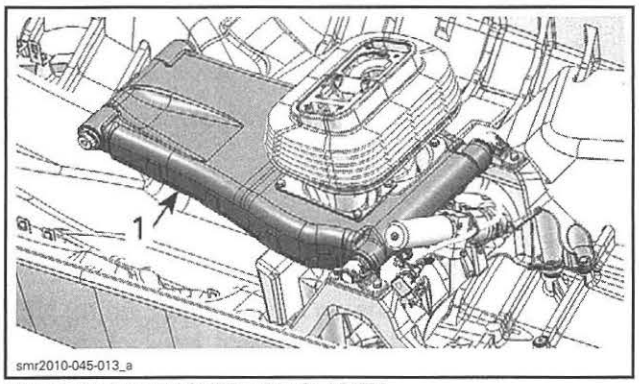

FIXED DECK REMOVED FOR CLARITY
1. Front suspension arm

Front Suspension Arm Removal

1. Remove the moving deck. Refer to *BODY* subsection.
2. Remove the engine. Refer to *ENGINE REMOVAL AND INSTALLATION* subsection.
3. Remove both lateral support screws.

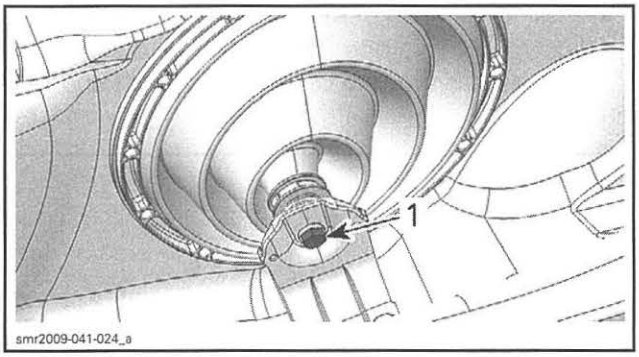

RH SIDE SHOWN
1. Lateral support screw

4. Disconnect lateral supports from suspension arm shaft.
5. Refer to *HYDRAULIC PUMP REMOVAL (AS A UNIT WITH ACTUATOR)* and remove the pump from the PWC.
6. Remove screws securing both shaft supports to suspension base.
7. Move front suspension arm rearward to remove it from the PWC.

Front Suspension Arm Installation

The installation is the reverse of the removal procedure. However, pay attention to the following.

If a shaft support has been loosened from the suspension arm shaft, see *SUSPENSION ARM SHAFTS* for proper installation procedure.

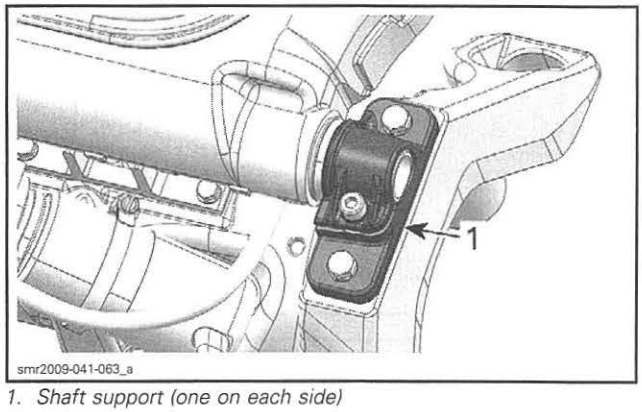

1. Shaft support (one on each side)

SUSPENSION BASE

Suspension Base Location

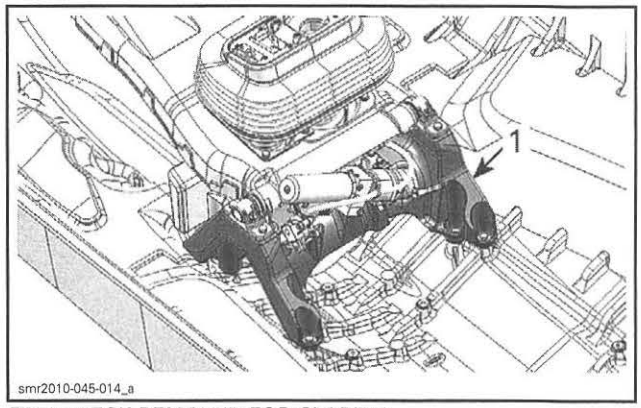

FIXED DECK REMOVED FOR CLARITY
1. Suspension base

Suspension Base Removal

1. Refer to the appropriate procedures and remove the following parts:
   - Moving deck
   - Engine
   - Shock absorber and springs
   - Hydraulic pump (with actuator)
   - Suspension position sensor.
2. Using a marker, **trace the shape of suspension base at the bottom of the hull** to reposition it at the same place.
3. Remove and discard suspension base screws.

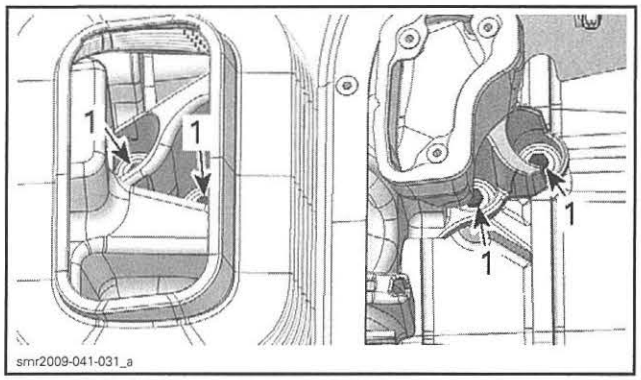

STARBOARD SIDE
1. Suspension base screws

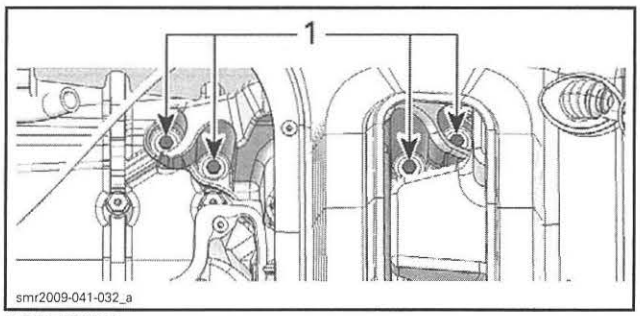

PORT SIDE
1. Suspension base screws

4. Remove suspension base along with the rear vent duct.

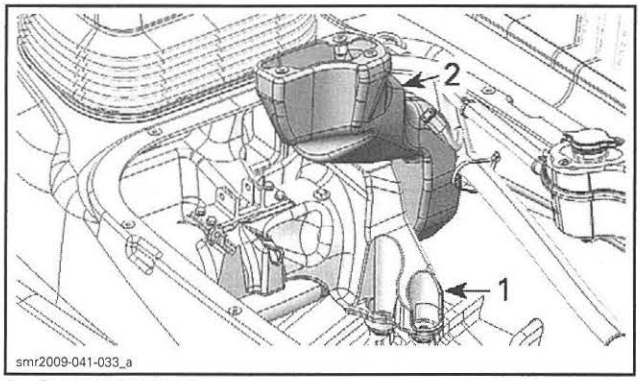

1. Suspension base
2. Rear vent duct

Suspension Base Installation

The installation is the reverse of the removal procedure. However, pay attention to the following.

1. Install the suspension base.
   1.1 Position the base in accordance with the reference marks previously drawn at the bottom of the hull.

   NOTE: If there is no mark, see *SUSPENSION BASE INSTALLATION WITHOUT REFERENCE MARKS*.

   1.2 Install **NEW** suspension base screws.
   1.3 Tighten suspension base screws to 25 N•m (18 lbf•ft).
2. Refer to the appropriate procedures and install all other removed parts.
   - Actuator and hydraulic pump
   - Front suspension arm
   - Shock absorber and springs
   - Engine
   - Moving deck.

Suspension Base Installation without Reference Marks

1. Install the suspension base in PWC using **NEW** screws. Do not tighten them yet.
2. Install the front arm on suspension base and tighten screws to 25 N•m (18 lbf•ft), use the OLD screws.
3. Install lateral supports.
   3.1 Index lateral supports with the front suspension shaft ends. Lateral supports can be inserted in one position only.
   3.2 Tighten lateral support screws to 48 N•m (35 lbf•ft).
4. Align suspension base in PWC.
   4.1 On both sides, measure the distance between the end of lateral support and fixed deck.

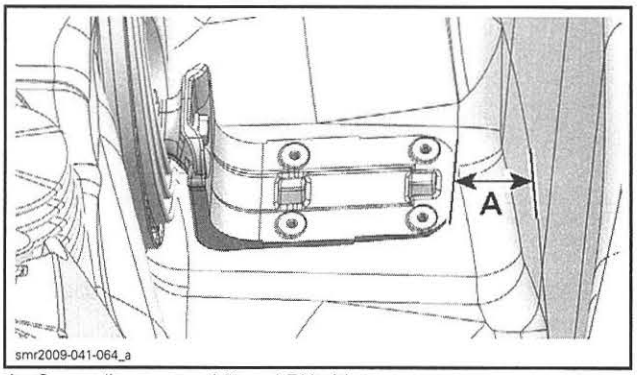

A. Same distance on LH and RH sides

   4.2 If required, move suspension base until both distances are equal.
   4.3 Tighten suspension base rear screws to 25 N•m (18 lbf•ft).

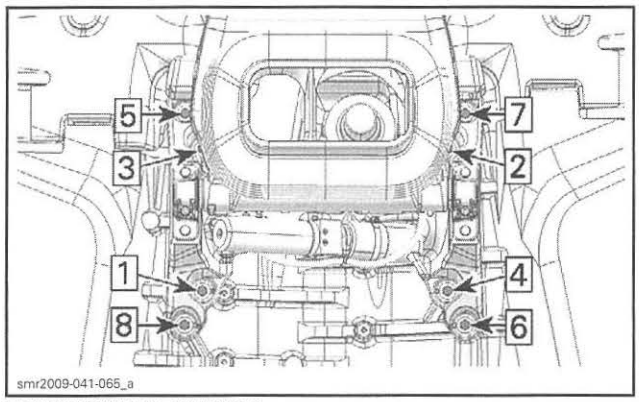

TIGHTENING SEQUENCE

5. Refer to the appropriate procedures and install all other removed parts.
   - Actuator and hydraulic pump
   - Shock absorber and springs
   - Engine
   - Moving deck.

REAR SUSPENSION ARM

Rear Suspension Arm Location

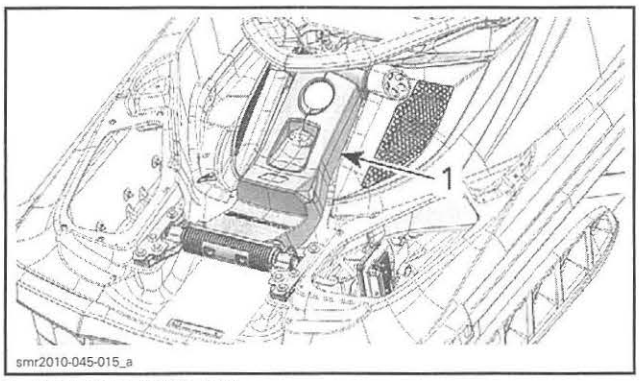

1. Rear suspension arm

Rear Suspension Arm Removal

1. Open the boarding platform.
2. Remove bolts securing both rear suspension arm covers.

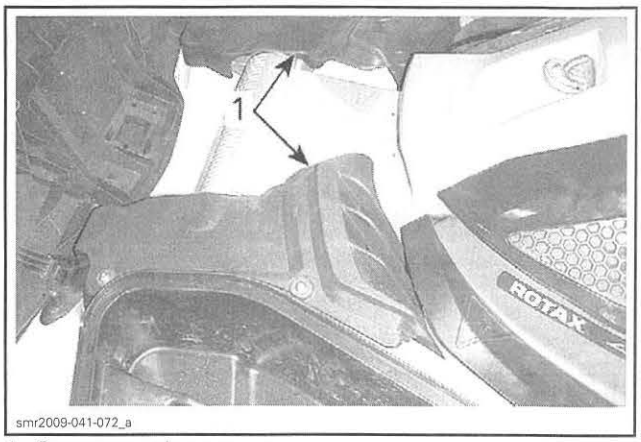

1. Rear suspension arm cover

3. Unclip and remove both lateral rear panels.

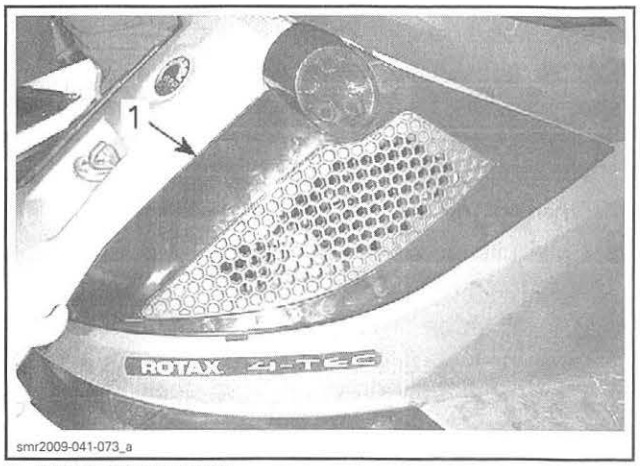

1. RH lateral rear panel

4. Mark position of rear suspension arm brackets for proper reinstallation.
5. Remove and discard screws securing rear suspension arm to fixed deck.

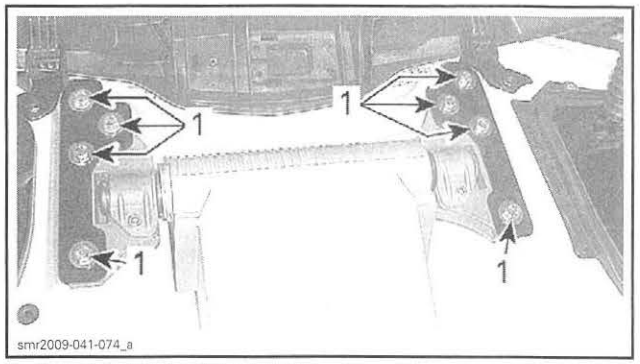

1. Rear suspension arm screws

6. Remove and discard screws securing the top of rear suspension arm.

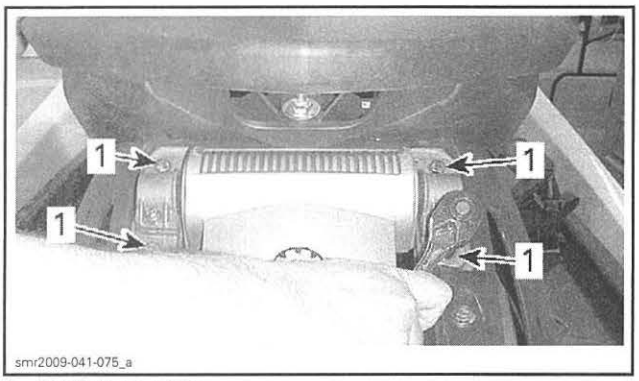

1. Retaining screws

7. Remove the rear suspension arm from PWC.

Rear Suspension Arm Installation

1. Using NEW screws, install the top of rear suspension arm.

NOTE: If the upper arm shaft or one of its arm shaft support has been removed or loosened, refer to *SUSPENSION ARM SHAFTS* for proper installation procedure.

2. Tighten screws to 25 N•m (18 lbf•ft).
3. Carefully lower and secure the rear suspension arm to the fixed deck.
   - 3.1 Position the rear suspension arm brackets in accordance with the reference marks previously draw on fixed deck.

     NOTICE If no mark was traced, refer to *REAR SUSPENSION ARM INSTALLATION WITHOUT REFERENCE MARKS* for proper procedure to install and align the rear suspension arm.

   - 3.2 Install NEW screws to secure rear suspension arm brackets.
   - 3.3 Tighten screws to 25 N•m (18 lbf•ft).

Rear Suspension Arm Installation Without Reference Marks

1. Lower the rear suspension arm on fixed deck.
2. Position the square openings of rear suspension arm brackets so that the threaded inserts in fixed deck are centered.

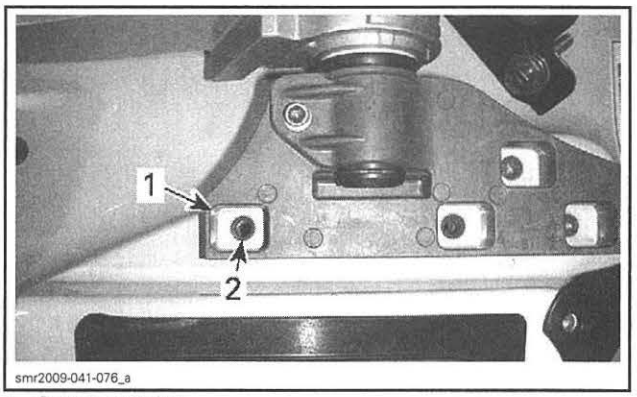

1. Square opening
2. Threaded insert

3. On each bracket, install the retaining plate and one screw.
4. Install a weight of 90 kg (200 lb) on PWC to lower the moving deck.
5. Check moving deck position in comparison to fixed deck.
   - 5.1 Check the gap between moving deck wipers and fixed deck. It should be the same on both sides.
   - 5.2 Check front and rear gaps. Moving deck should be able to move without having contact with the fixed deck.
   - 5.3 Reposition rear suspension arm brackets on fixed deck until positioning of moving deck is satisfactory.
6. Secure the rear suspension arm to the fixed deck.
   - 6.1 Install NEW screws to secure rear suspension arm brackets.
   - 6.2 Remove and replace screws installed during alignment.
   - 6.3 Tighten screws to 25 N•m (18 lbf•ft).

SUSPENSION ARM SHAFTS

Removal of Front Suspension Arm Shaft

1. Remove the *FRONT SUSPENSION ARM*, see procedure in this subsection.
2. Remove and discard socket screws securing supports to shaft.
3. Separate arm shaft supports from arm shaft.

Installation of Front Suspension Arm Shaft

1. To reinstall the shaft, insert it in the suspension arm.

2. Install a support on each end of theshaft.
3. Secure the LH arm shaft support to suspension base using NEW support screws.

NOTE: Make sure to insert the support pin into suspension base hole.

4. Tighten the LH support screws to 25 N•m (18 lbf•ft).
5. Apply a force on the RH support to move it on the left side.

NOTICE **Make sure arm shaft is fully inserted, it must lean against the arm shaft support.**

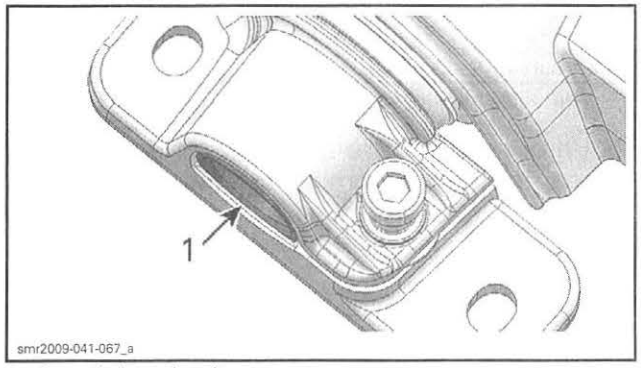

1. Arm shaft against its support

6. Install NEW support screws and tighten them to 25 N•m (18 lbf•ft).
7. Secure both supports to shaft using NEW socket screws. Tighten them to 12 N•m (106 lbf•**in**).

Removal of Rear Suspension Arm Upper Shaft

1. Unclip and remove both lateral rear panels.

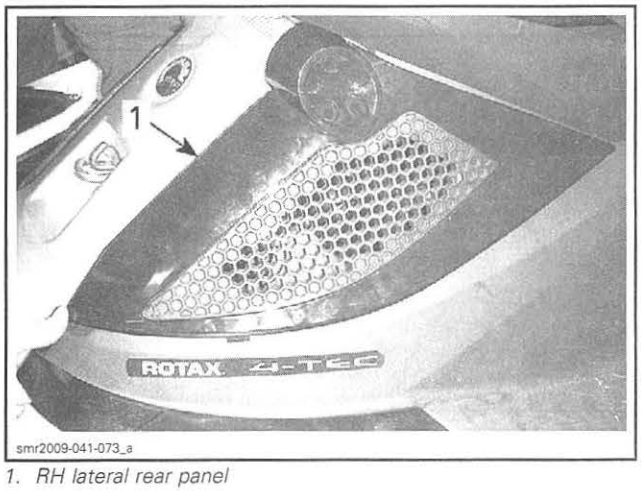

1. RH lateral rear panel

2. Remove arm shaft support screws.

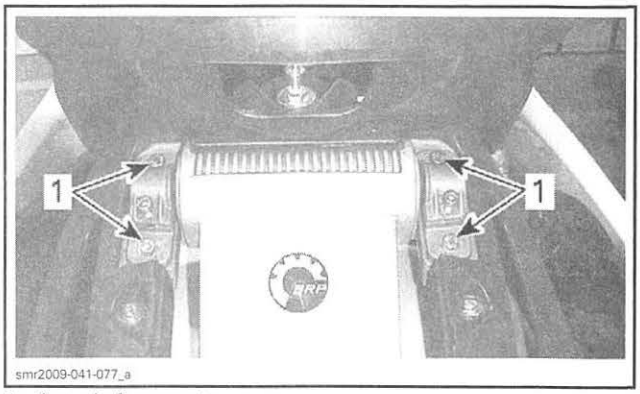

1. Arm shaft support screws

3. Remove and discard socket screws securing supports to arm shaft.
4. Separate arm shaft support from arm shaft.

Installation of Rear Suspension Arm Upper Shaft

1. To reinstall the shaft, insert it in the rear arm.
2. Install a support on each end of shaft.
3. Secure the LH support to rear arm holder using NEW support screws.

NOTE: Make sure to insert the support pin into holder hole.

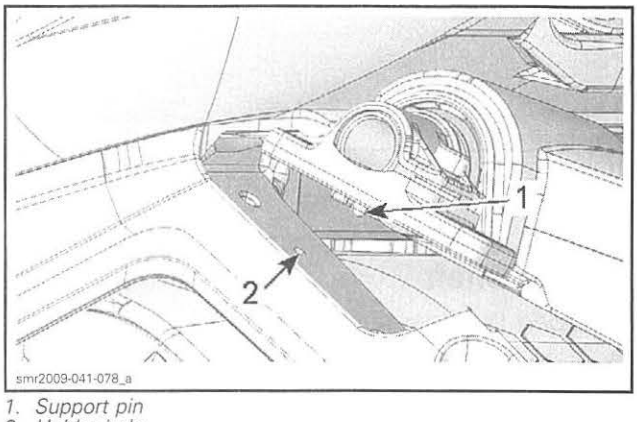

1. Support pin
2. Holder hole

4. Tighten the LH support screws to 25 N•m (18 lbf•ft).
5. Apply a force on the RH support to move it to the left side.

NOTE: A bar clamp can be used to compress both supports together.

NOTICE **Make sure arm shaft is fully inserted, it must lay flush against the arm shaft support.**

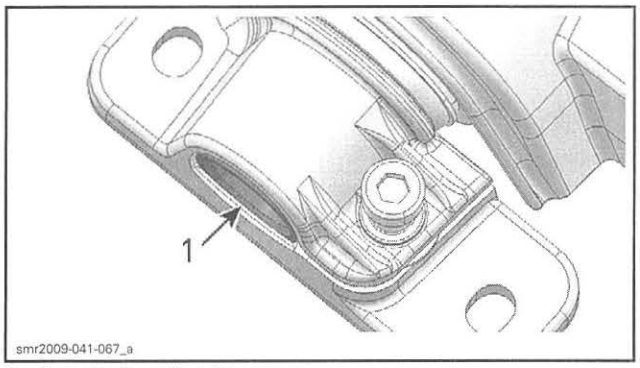

1. Arm shaft against its support

6. Install NEW support screws and tighten them to 25 N•m (18 lbf•ft).
7. Secure both supports to shaft using NEW socket screws. Tighten them to 12 N•m (106 lbf•**in**).

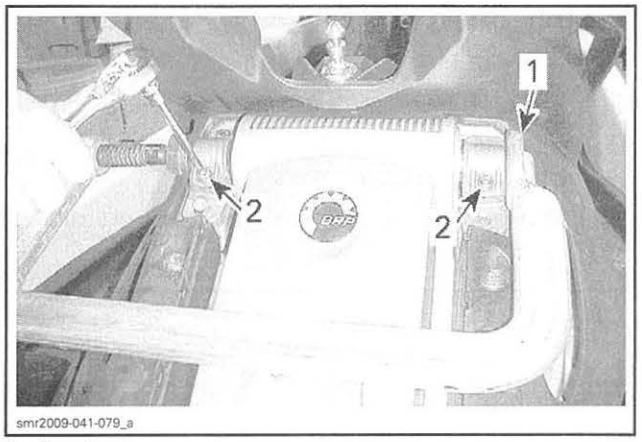

1. Bar clamp
2. New socket screws

Removal of Rear Suspension Arm Lower Shaft

1. Open the boarding platform.
2. Remove bolts securing both rear suspension arm covers.

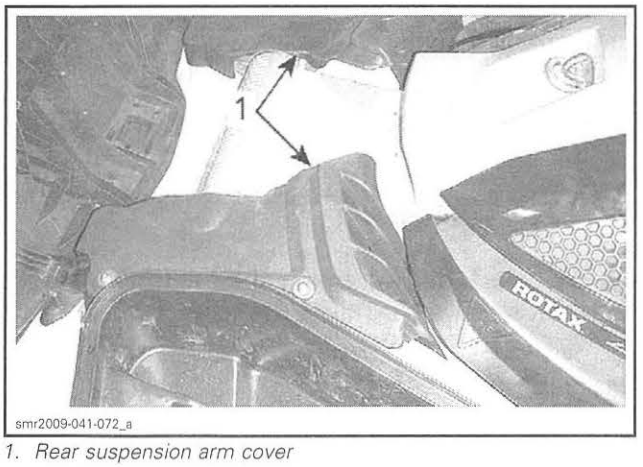

1. Rear suspension arm cover

3. Mark position of rear suspension arm brackets for proper reinstallation.
4. Remove and discard screws securing rear suspension arm to fixed deck.

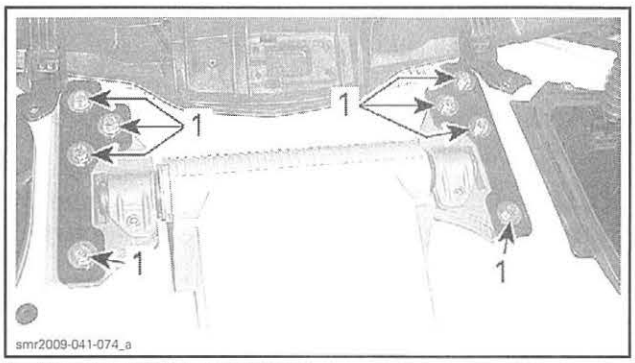

1. Rear suspension arm screws

5. Remove and discard socket screws securing rear brackets to arm shaft ends.

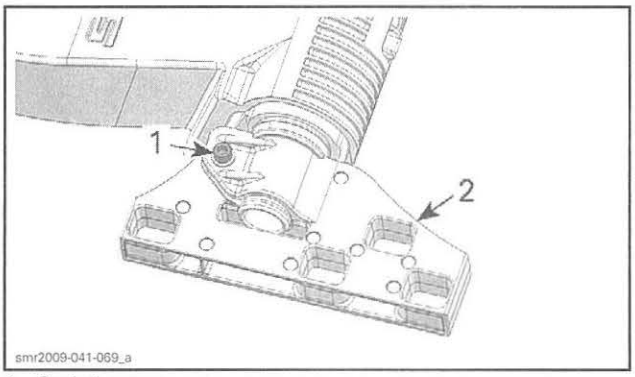

1. Socket screw
2. LH rear bracket

6. Press one rear bracket against the suspension arm bushing and remove the circlip. Repeat for the other side.

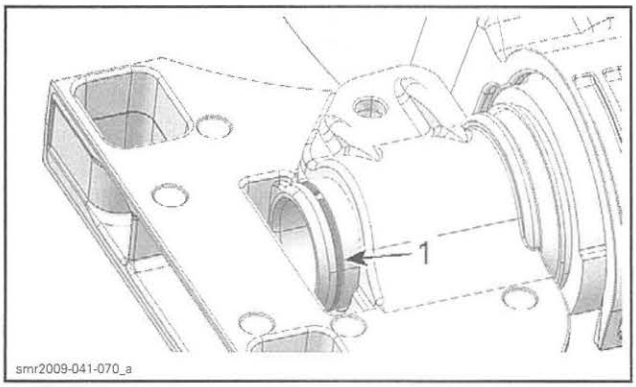

1. Circlip

Installation of Rear Suspension Arm Lower Shaft

1. When reassembly the rear bracket on shaft end, press bracket on bushing to install the circlip.
2. When both brackets are installed on shaft, pull brackets outside to position circlips against brackets.

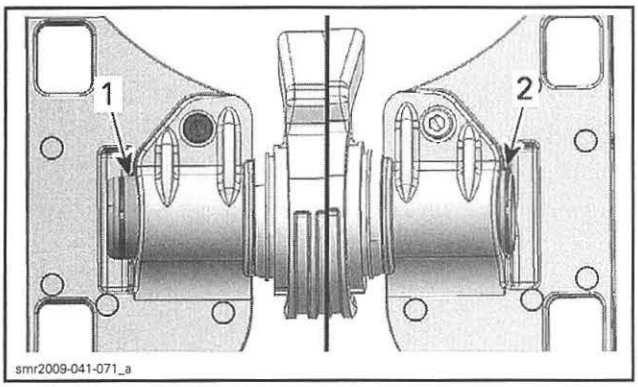

1. Incorrect installation
2. Proper installation

3. Lower the rear suspension arm on fixed deck.
4. Tighten **NEW** socket screws to 10 N•m (89 lbf•**in**).
5. Refer to *REAR ARM* for reinstallation.

BODY (GTS/GTI/GTR/WAKE)

SERVICE TOOLS

Description	Part Number	Page
SUPERTANIUM DRILL BIT 3/16"	529 031 800	604–605, 608

SERVICE PRODUCTS

Description	Part Number	Page
LOCTITE 243 (BLUE)	293 800 060	606
XPS SYNTHETIC GREASE	293 550 010	609–610

BODY PARTS NOMENCLATURE

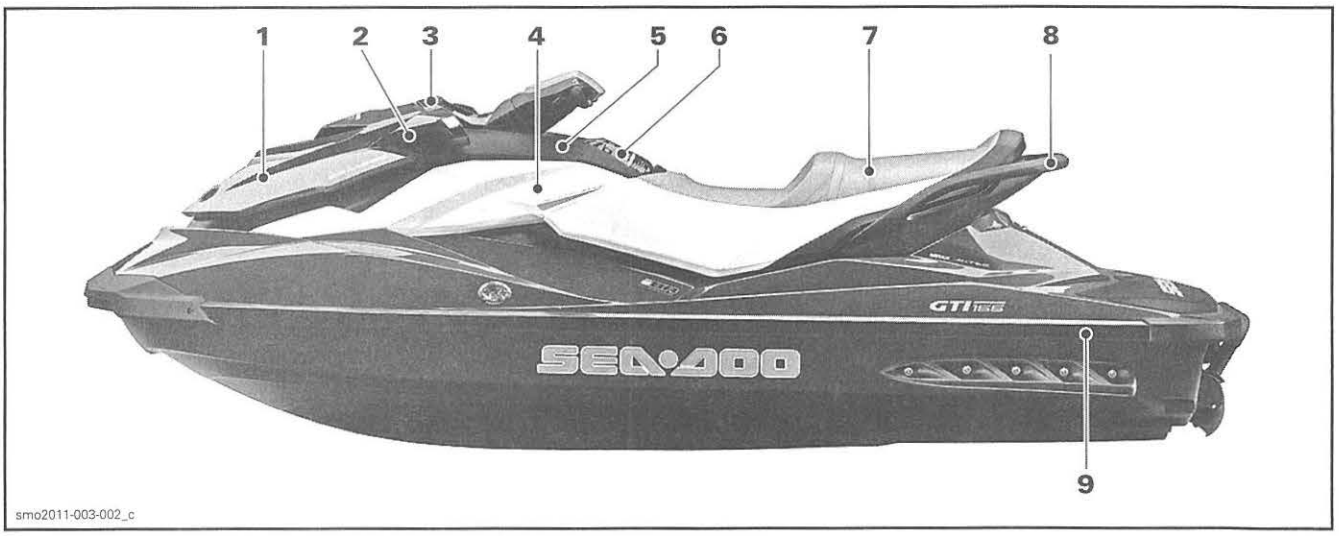

1. *Storage compartment cover*
2. *Mirror support*
3. *Gauge trim*
4. *Lateral trim panel*
5. *Console*
6. *Glove box cover*
7. *Seat*
8. *Rear handle*
9. *Bumper*

STORAGE COMPARTMENT COVER

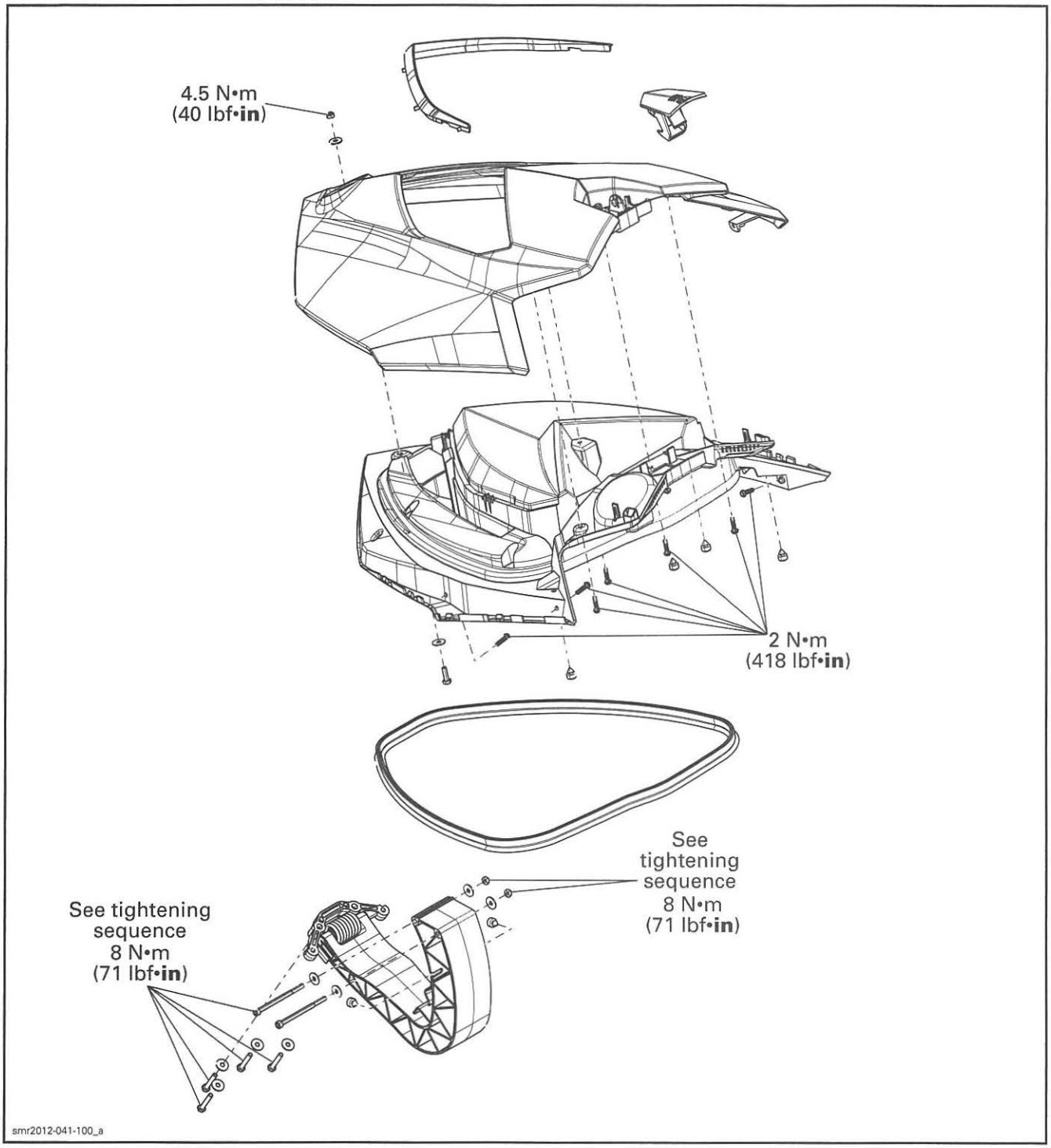

BODY PARTS

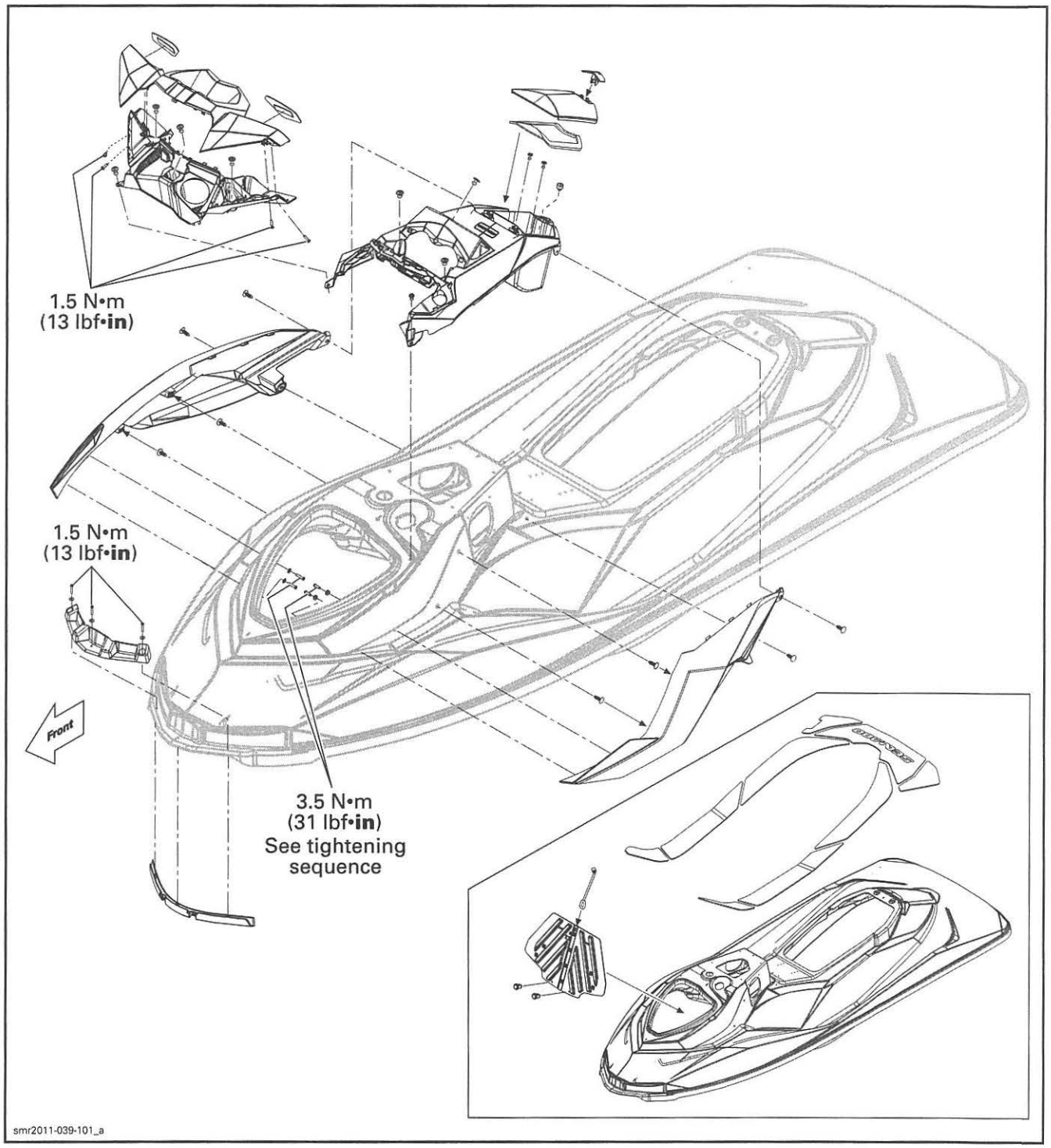
1.5 N•m
(13 lbf•in)
1.5 N•m
(13 lbf•in)
Front
3.5 N•m
(31 lbf•in)
See tightening
sequence
smr2011-039-101_a

BODY PARTS

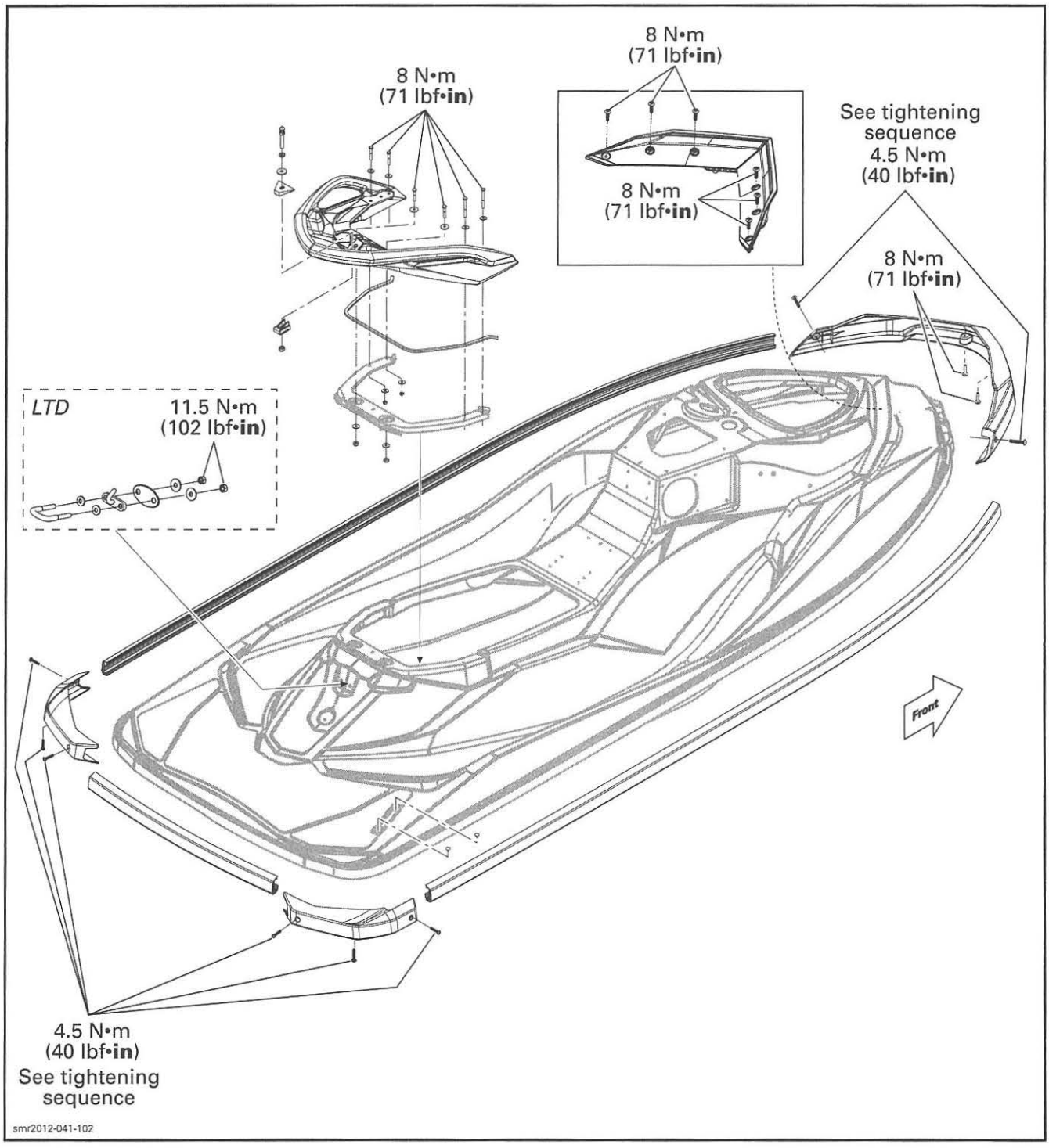
8 N•m
(71 lbf•in)
8 N•m
(71 lbf•in)
8 N•m
(71 lbf•in)
See tightening
sequence
4.5 N•m
(40 lbf•in)
8 N•m
(71 lbf•in)
LTD
11.5 N•m
(102 lbf•in)
Front
4.5 N•m
(40 lbf•in)
See tightening
sequence
smr2012-041-102

VENTILATION



smr2011-039-103

SEAT

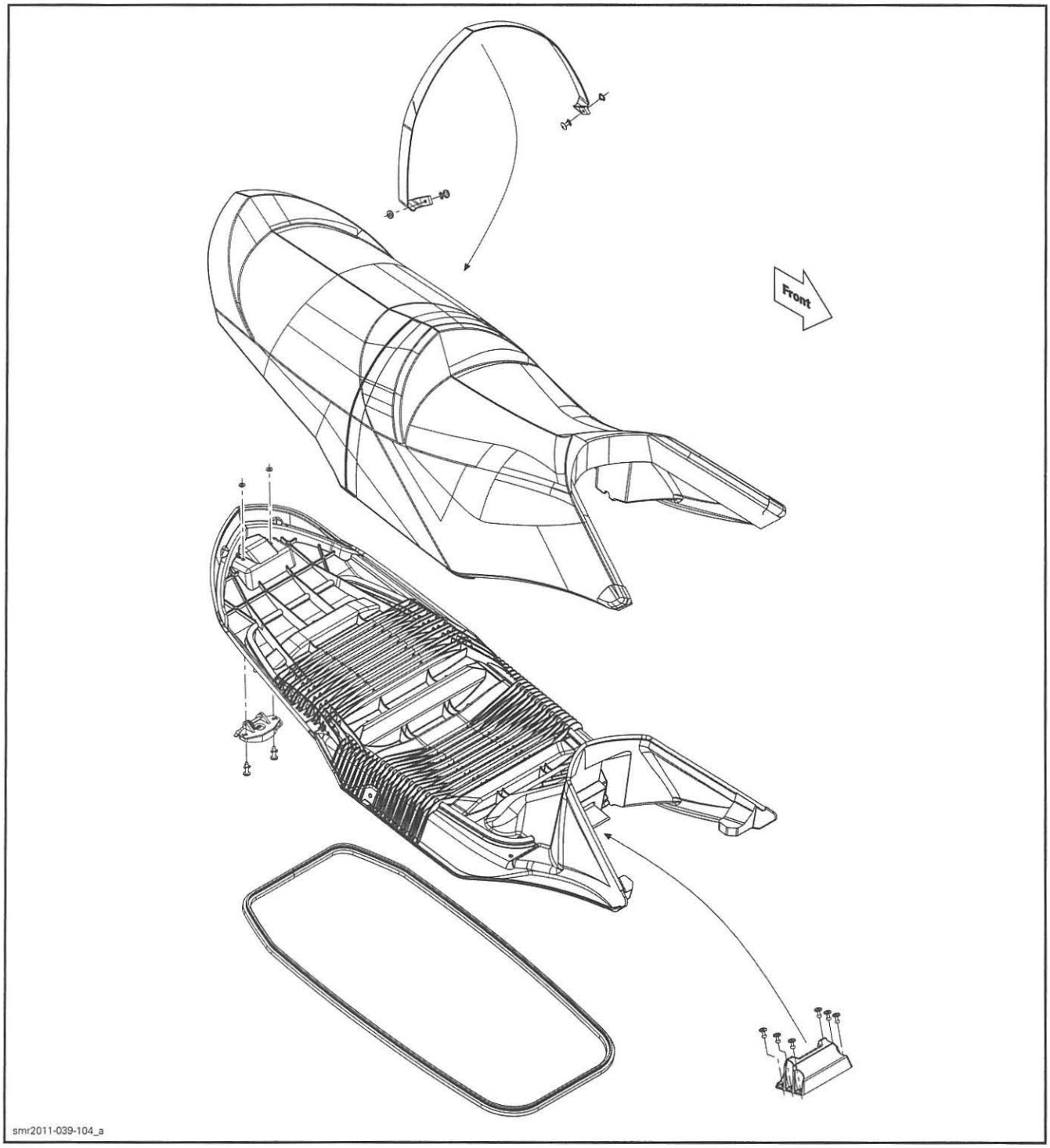

WAKEBOARD RACK AND WAKE PYLON

Wake 155

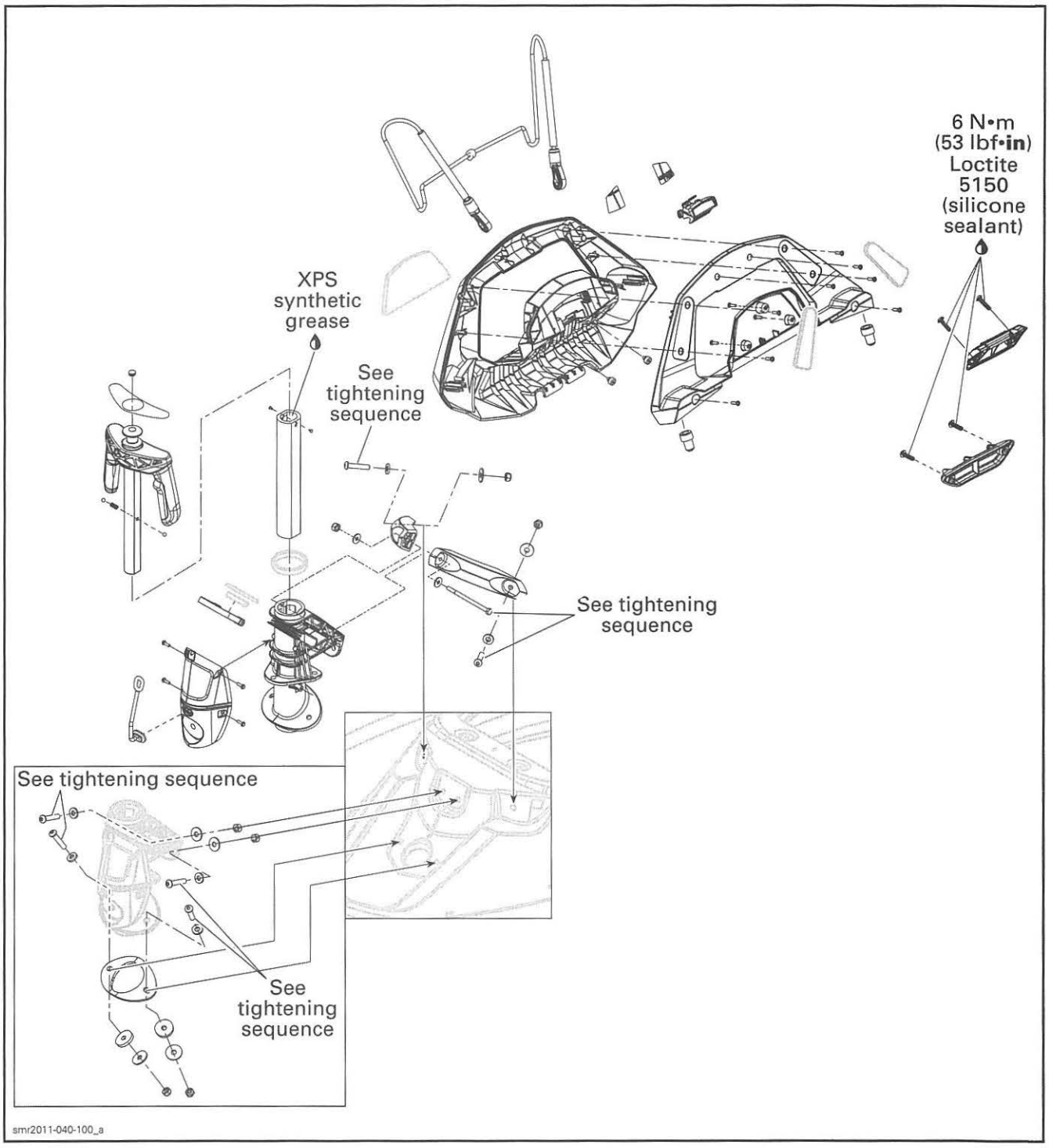

PROCEDURES

GELCOAT

For information and repair, refer to *BODY (RXT/GTX/WAKE PRO)* subsection.

DECALS

For information and repair, refer to *BODY (RXT/GTX/WAKE PRO)* subsection.

CARPETS

For information and repair, refer to *BODY (RXT/GTX/WAKE PRO)* subsection.

STORAGE COMPARTMENT COVER

Storage Compartment Cover Removal

1. Open storage compartment cover.
2. Remove nuts and bolts securing storage compartment cover to hinge.

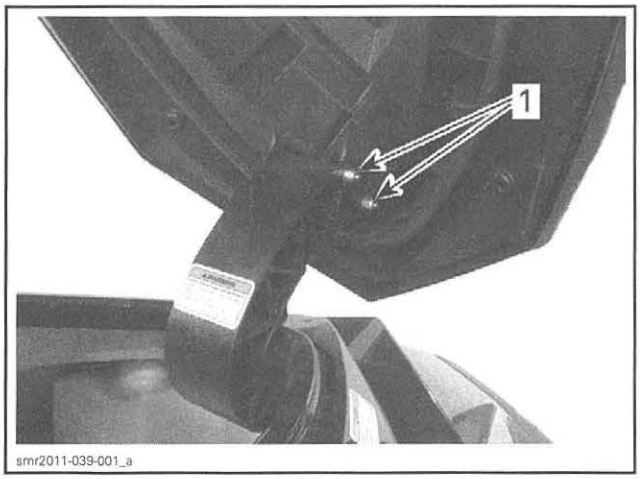

1. Retaining nuts

3. Remove storage compartment cover.

Storage Compartment Cover Disassembly

Storage Compartment Cover Inner Shell

1. Remove BRP logo located at the front of cover.
2. Remove inner shell retaining screws and bolt.

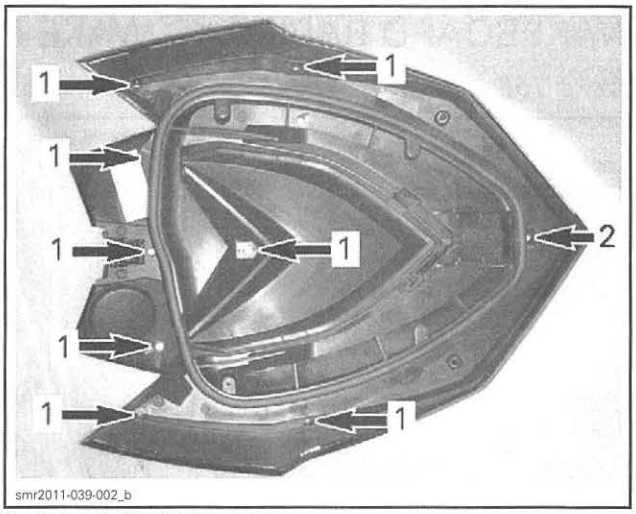

1. Inner shell retaining screws
2. Bolt

3. Unlatch both retaining tabs at the rear using a screwdriver.

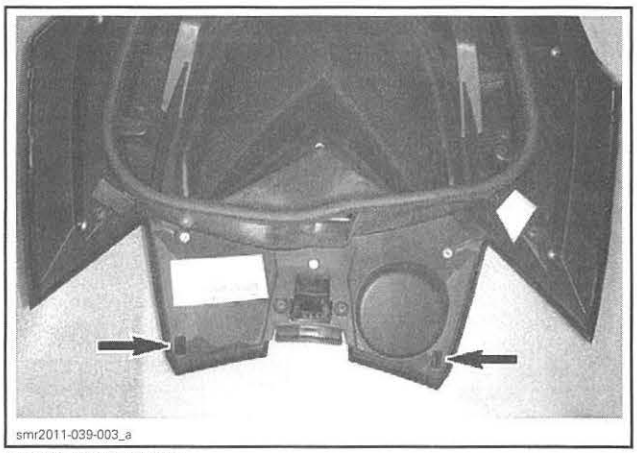

RETAINING TABS

4. Unlatch retaining tabs on both sides using a screwdriver.

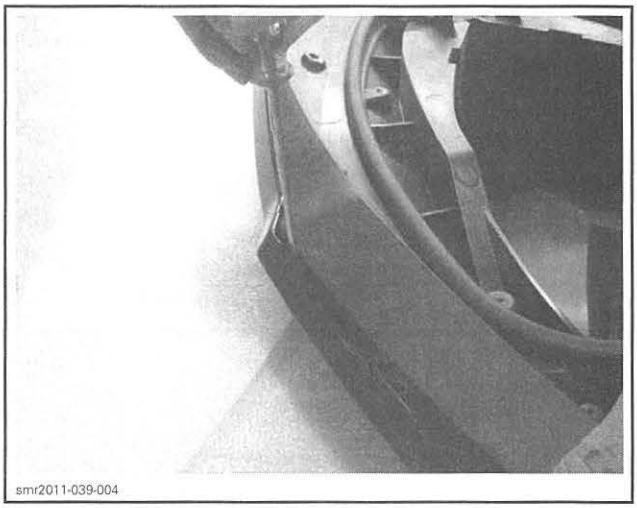

5. Disassemble inner shell from storage compartment cover.

Storage Compartment Cover Latch

1. Ensure that inner shell is removed.
2. Remove latch by slightly pushing both retaining holes toward the inside.

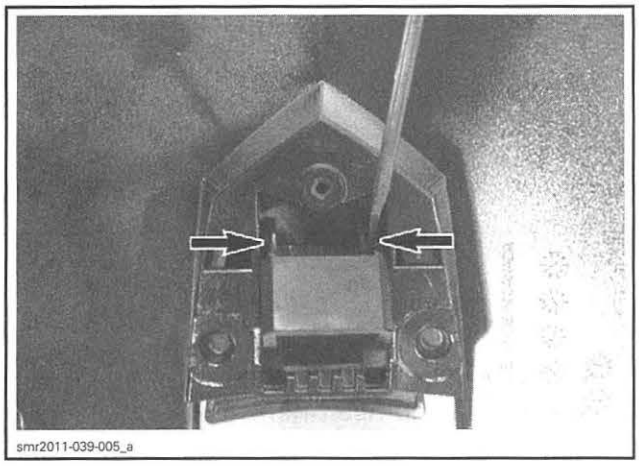

Storage Compartment Cover Assembly

The assembly is the reverse of the disassembly procedure. However, pay attention to the following.

Tighten inner shell retaining screws and bolt to specification as per the following sequence.

TIGHTENING TORQUE	
Inner shell retaining screws	2.0 N•m (18 lbf•**in**)
Inner shell retaining bolt	4.5 N•m (40 lbf•**in**)

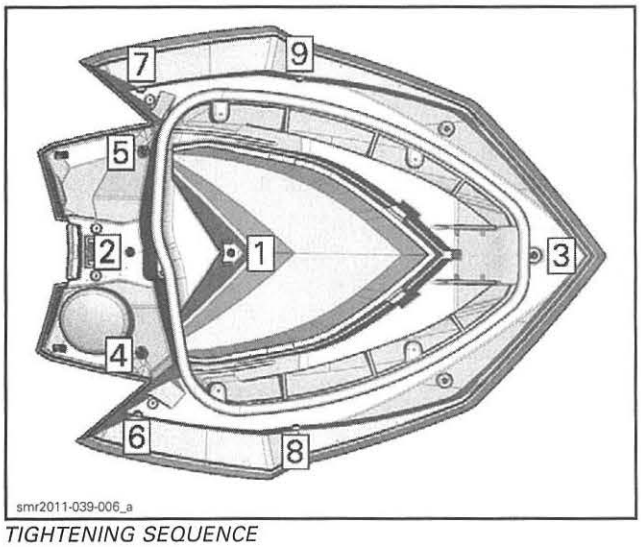

TIGHTENING SEQUENCE

Storage Compartment Cover Installation

The installation is the reverse of the removal procedure. However, pay attention to the following.

Tighten storage compartment cover retaining nuts to specification as per the following sequence.

TIGHTENING TORQUE	
Storage compartment cover retaining nuts	8.0 N•m (71 lbf•**in**)

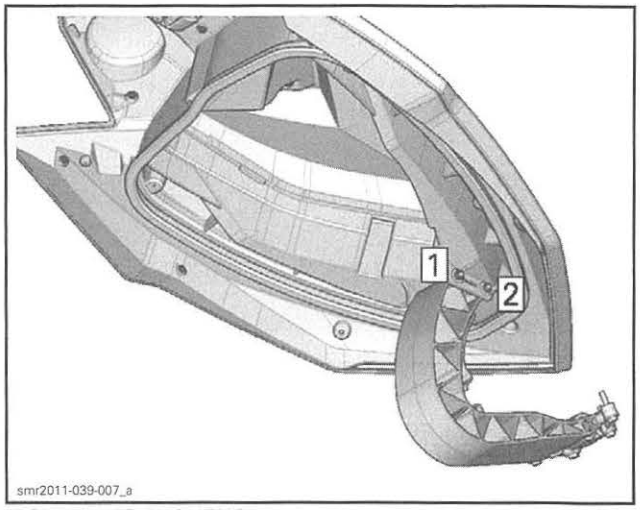

TIGHTENING SEQUENCE

STORAGE COMPARTMENT COVER HINGE

Storage Compartment Cover Hinge Removal

1. Proceed with *STORAGE COMPARTMENT COVER REMOVAL*.
2. Remove screws securing storage compartment cover hinge to deck.

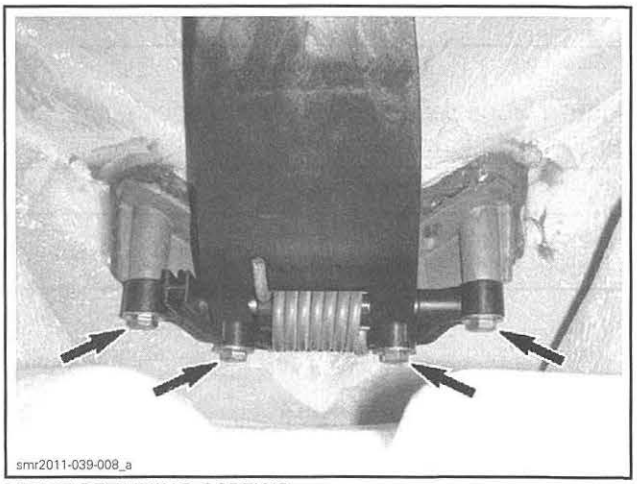

HINGE RETAINING SCREWS

Storage Compartment Cover Hinge Installation

The installation is the reverse of the removal procedure. However, pay attention to the following.

Use a ø 6.5 mm (1/4 in) steel rod to make a hook in order to lock the hinge.

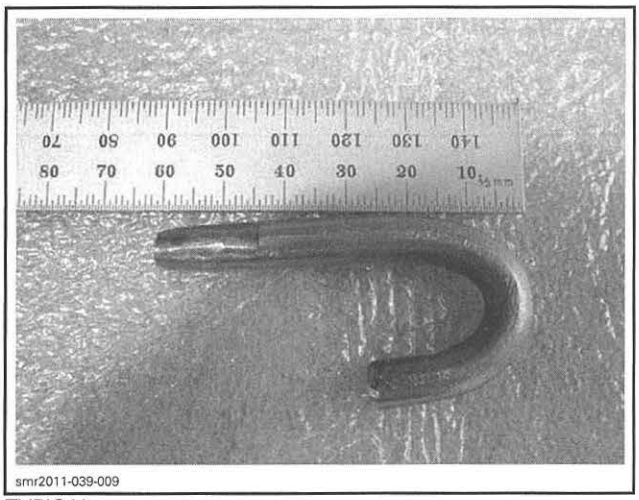

TYPICAL

Insert the steel hook on the lateral tab of hinge in order to slightly load the spring.

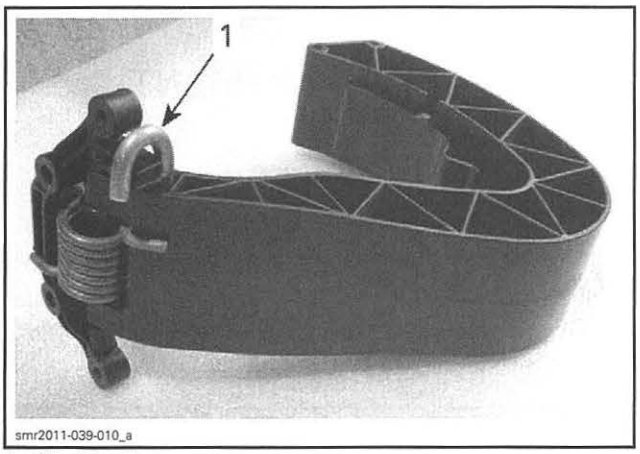

1. Steel hook

Tighten hinge retaining screws to specification as per the following sequence.

TIGHTENING TORQUE	
Storage compartment cover hinge screws	8.0 N•m (71 lbf•**in**)

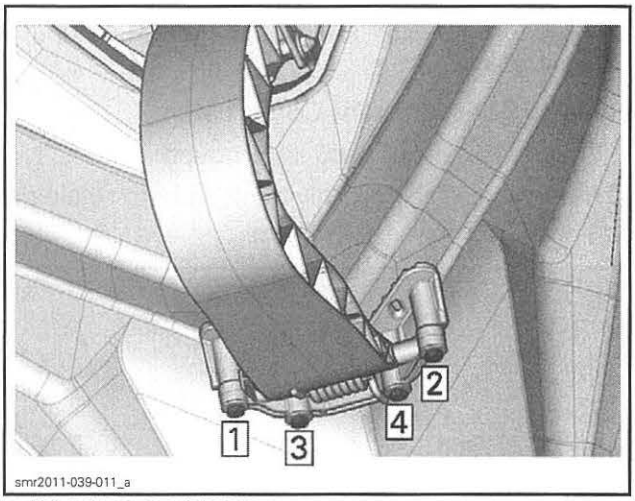

TIGHTENING SEQUENCE

GAUGE TRIM

Gauge Trim Removal

1. Open storage compartment cover.
2. From underneath mirror, remove retaining screws on both sides.

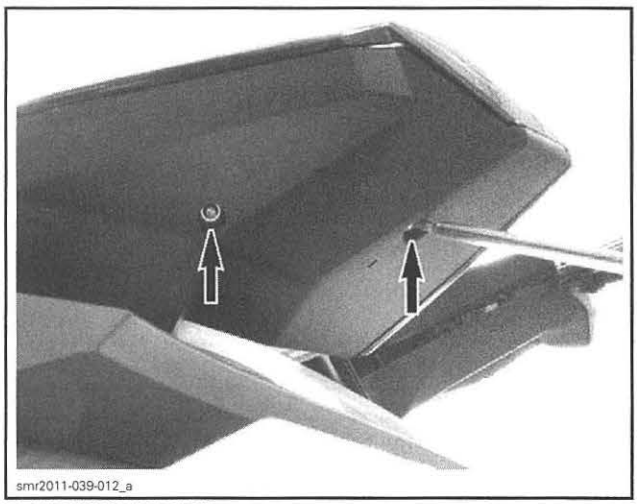

RETAINING SCREWS

3. Hit with a sharp blow the front part of mirror toward the rear to unlock it.

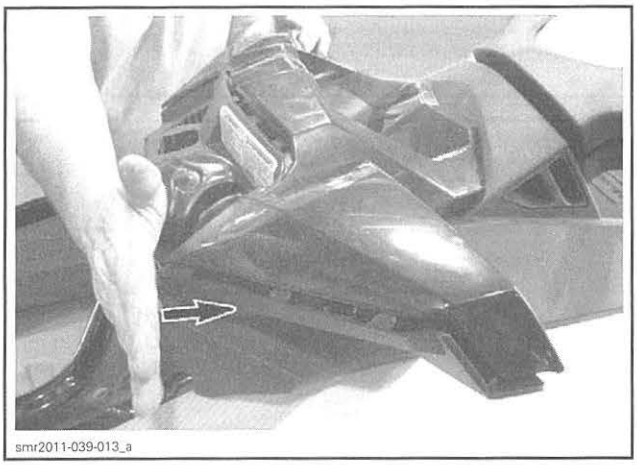

4. Remove gauge trim from mirror support.

Gauge Trim Installation

The installation is the reverse of the removal procedure. However, pay attention to the following.

Prior to inserting gauge trim into mirror support, ensure that all tabs are properly aligned.

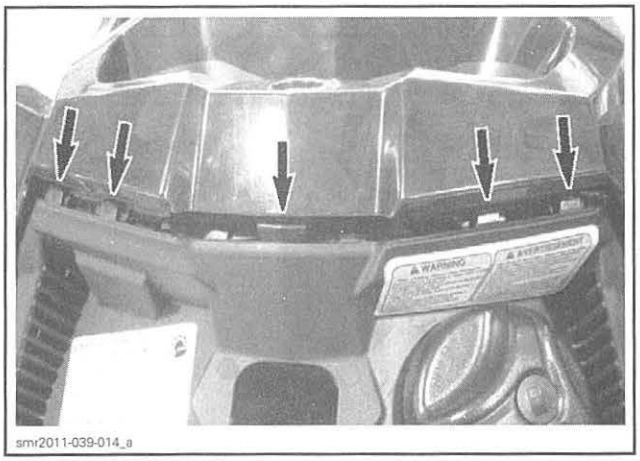

TOP OF GAUGE TRIM

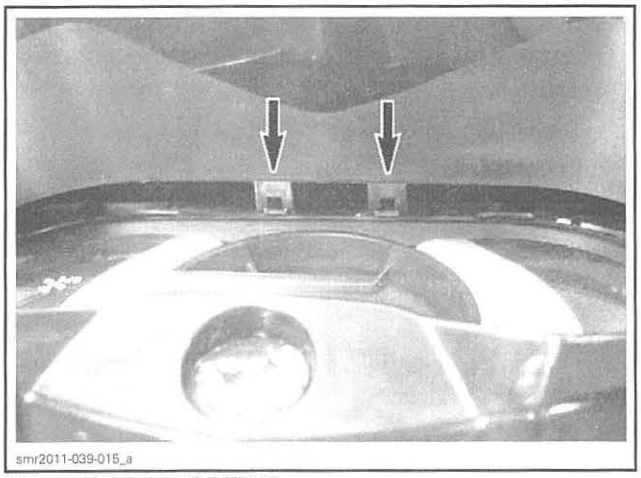

BOTTOM OF GAUGE TRIM

LATERAL TRIM PANEL

Lateral Trim Panel Removal

1. Remove seat.
2. From inside storage compartment, remove screws securing lateral trim panel to deck.

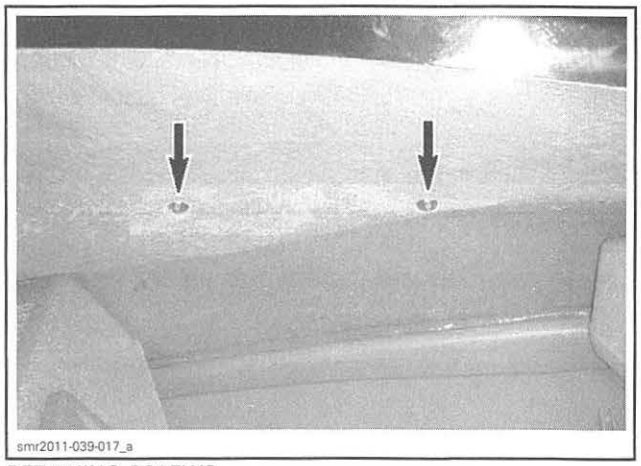

RETAINING SCREWS

3. From inside storage compartment, remove plastic rivets securing lateral trim panel to deck.

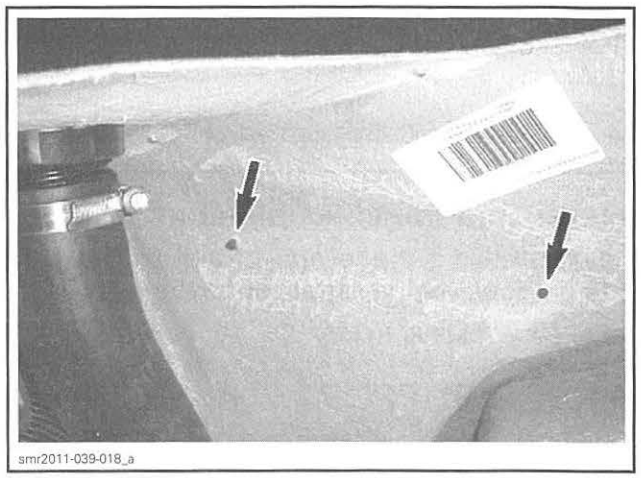

PLASTIC RIVETS

4. Remove plastic rivets securing the rear portion of lateral trim panel.

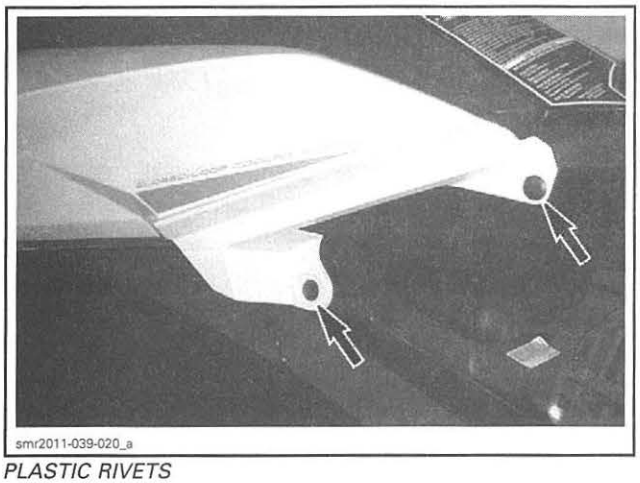
smr2011-039-020_a

PLASTIC RIVETS

5. Slide panel toward the front to unlock retaining tabs.

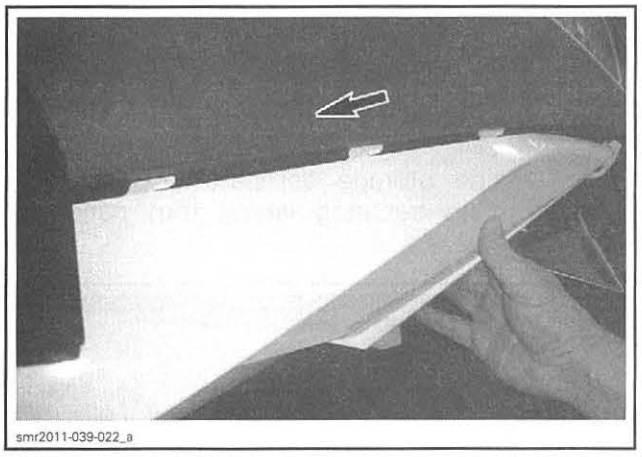
smr2011-039-022_a

Lateral Trim Panel Installation

The installation is the reverse of the removal procedure. However, pay attention to the following.

Install **NEW** plastic rivets.

MIRROR SUPPORT

Mirror Support Removal

1. Proceed with *LATERAL TRIM PANEL REMOVAL*. See procedure in this subsection.
2. Proceed with *INFORMATION CENTER REMOVAL*. Refer to *INFORMATION CENTER (GAUGE)* subsection.
3. Remove steering column, refer to *STEERING AND O.T.A.S.* subsection.
4. Remove the following rivets securing mirror support to deck.

REQUIRED TOOL
SUPERTANIUM DRILL BIT 3/16" (P/N 529 031 800)

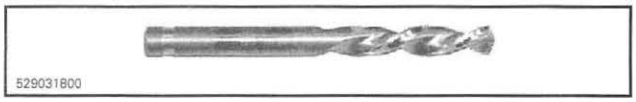
529031800

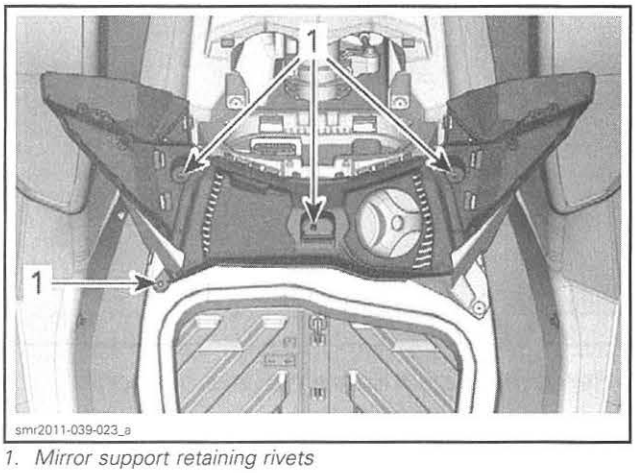

smr2011-039-023_a

1. Mirror support retaining rivets

5. Remove fuel tank cap.
6. Place a **clean** cloth rag onto fuel tank tube.
7. Unlatch retaining tabs on both sides using a screwdriver.

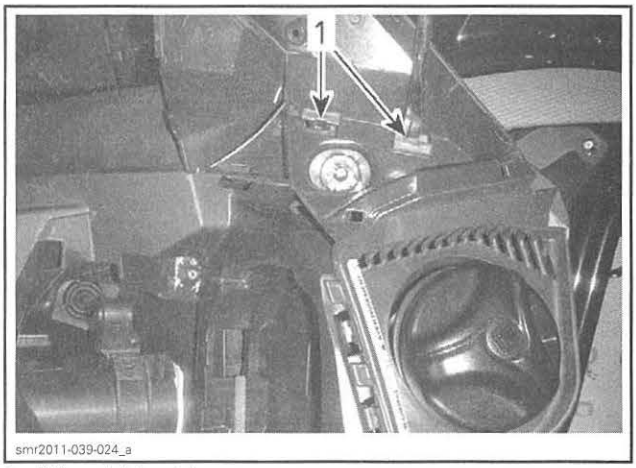

smr2011-039-024_a

1. Side retaining tabs

8. Unlatch retaining tabs on the top using a screwdriver.

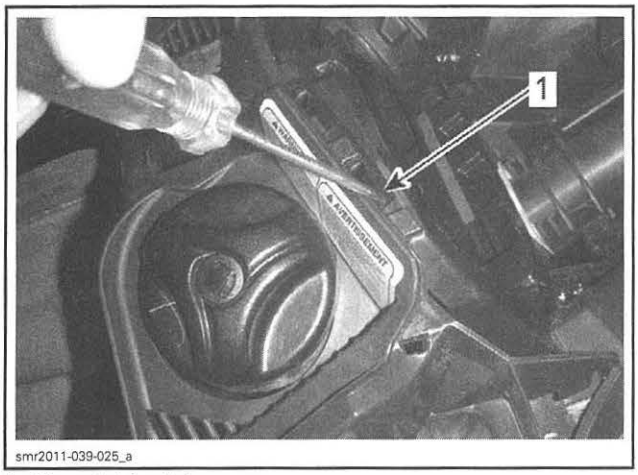

1. Top retaining tab

9. Remove mirror support by pulling it upwards.
10. Remove cloth rag and reinstall fuel tank cap.

⚠ WARNING

Fuel vapors are flammable and explosive under certain conditions. Unless otherwise noted, the fuel tank cap must always be installed on watercraft.

Mirror Support Installation

The installation is the reverse of the removal procedure. However, pay attention to the following.

Prior to inserting mirror support into console, ensure that all tabs are properly aligned.

Install rivets upside down with washers on mirror support top surface.

MIRRORS

Mirror Replacement

1. Proceed with *GAUGE TRIM REMOVAL*, see procedure in this subsection.
2. From inside gauge trim, slightly heat mirror.
3. Push at the back of mirror to remove it.
4. Properly clean gauge trim surface of any glue residue.
5. Install mirror using adhesive tape at the back of mirror.
6. Reinstall gauge trim as the reverse of removal.

CONSOLE

Console Removal

1. Proceed with *MIRROR SUPPORT REMOVAL*. See procedure in this subsection.
2. Remove *GLOVE BOX COVER*, see procedure in this subsection.
3. Remove the following rivets securing console to deck.

REQUIRED TOOL
SUPERTANIUM DRILL BIT 3/16" (P/N 529 031 800)

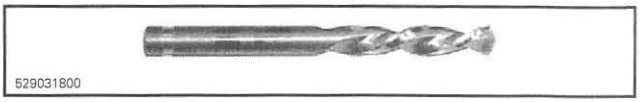

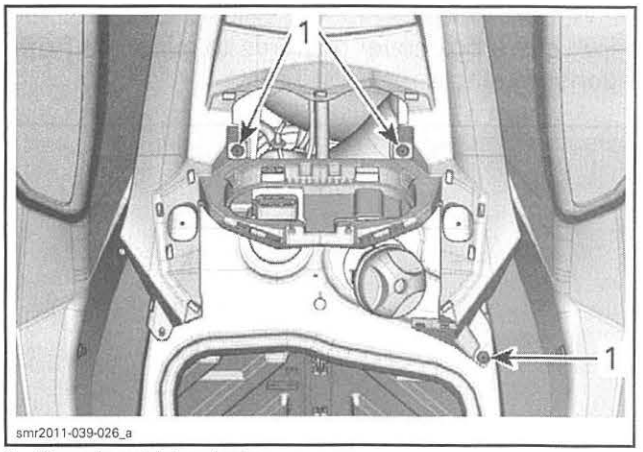

1. Console retaining rivets

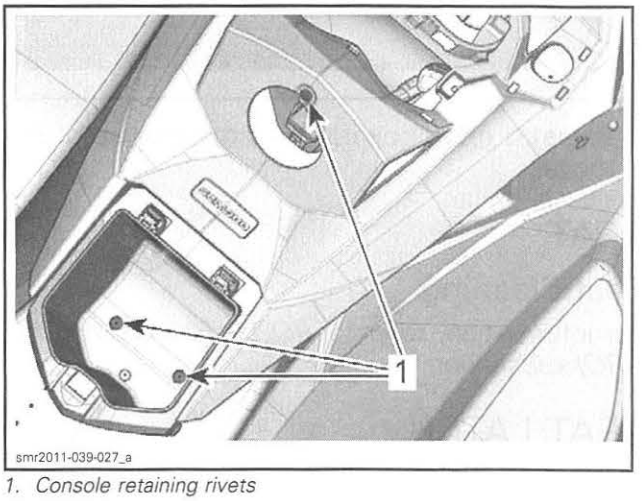

1. Console retaining rivets

4. Remove console by pulling it upwards.

Console Installation

The installation is the reverse of the removal procedure. However, pay attention to the following.

To ease installation of rivets located in glove box, proceed as follows:

- Remove air intake silencer, refer to *AIR INTAKE SYSTEM (EXCEPT iS AND aS MODELS)* subsection.
- Install rivets upside down with washers on console top surface.

GLOVE BOX COVER

Glove Box Cover Replacement

1. Open glove box cover.
2. Pull glove box cover upwards to release it from console hinge.

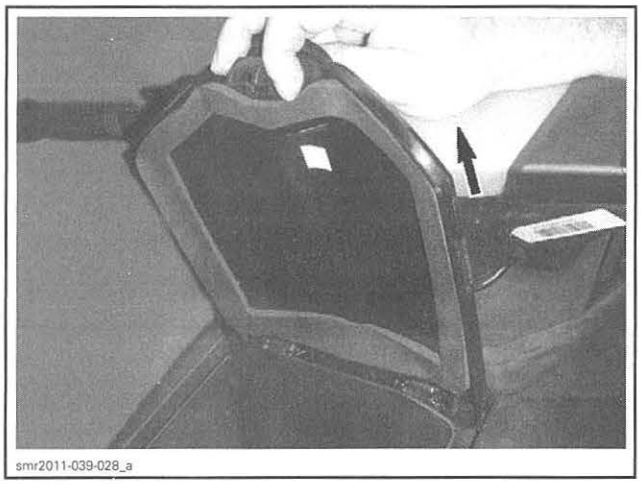

3. Reinstall glove box cover as the reverse of removal.

SEAT

Seat Cleaning

For information, refer to *BODY (RXT/GTX/WAKE PRO)* subsection.

SEAT LATCH

Seat Latch Adjustment

NOTE: Apply LOCTITE 243 (BLUE) (P/N 293 800 060) on threads of lock pin when the adjustment is required or when the lock pin is removed. If a new lock pin is used, it is already coat with a threadlocker.

1. Loosen adjustment nut.
2. Adjust lock pin height. Do not torque yet.
3. Position the lock pin longitudinally into the rear handle slot.

LOCK PIN POSITIONING	
MEASURE A	MEASURE B
24.0 mm ± 1.0 mm (.945 in ± .039 in)	30 mm ± 1.0 mm (1.181 in ± .039 in)

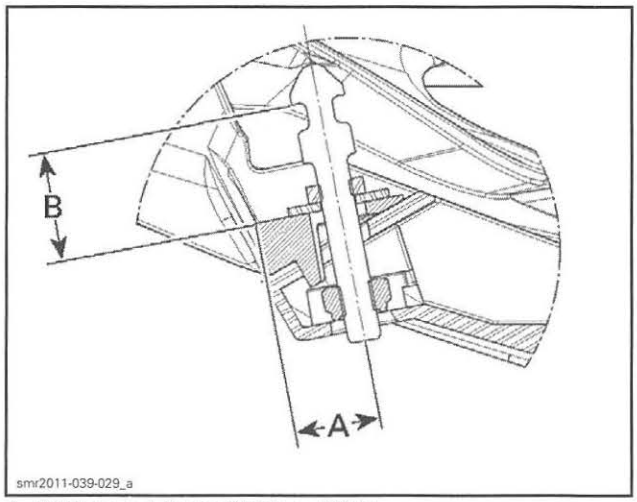

A. 24.0 mm ± 1.0 mm (.945 in ± .039 in)
B. 30 mm ± 1.0 mm (1.181 in ± .039 in)

4. Hold the lock pin in this position and tighten as per the following sequence.

SEAT LATCH TIGHTENING SEQUENCE		
STEP 1	Lock pin	9.5 N•m (84 lbf•**in**)
STEP 2	Adjustment nut	8.0 N•m (71 lbf•**in**)

5. Close the seat and readjust if required.

REAR HANDLE

Rear Handle Replacement

1. Remove seat.
2. Remove screws securing rear handle to deck.

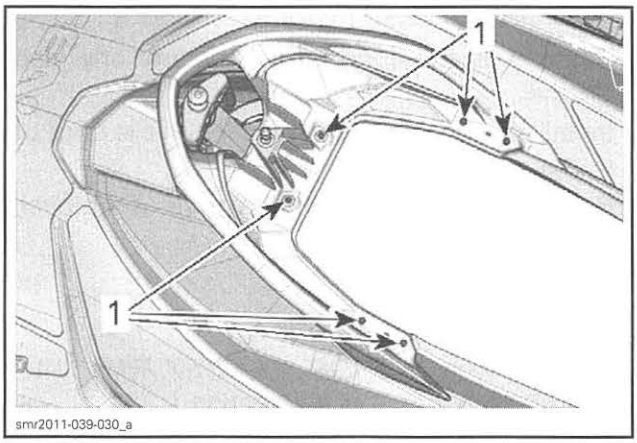

1. Rear handle retaining screws

3. Replace rear handle.
4. Tighten rear handle screws to specification.

TIGHTENING TORQUE	
Rear handle screws	8.0 N•m (71 lbf•**in**)

BUMPER

Bumper Replacement

1. Remove screws securing front bumper.
2. Remove front bumper from deck.

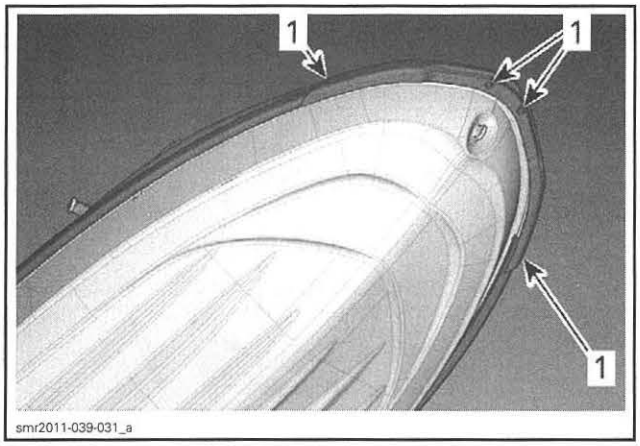

1. Front bumper retaining screws

3. Remove screws securing both rear corner bumpers.
4. Remove rear corner bumpers from deck.

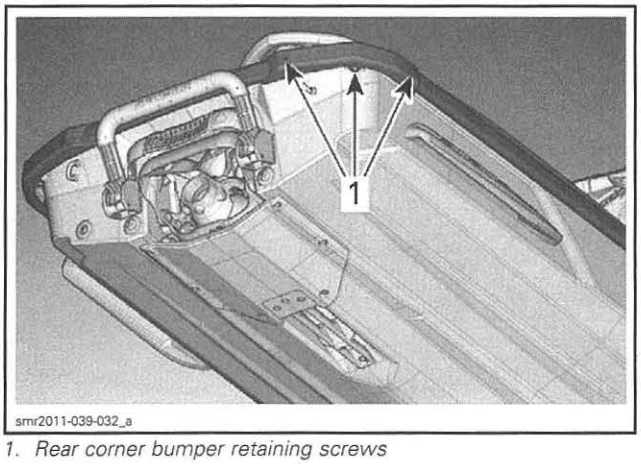

1. Rear corner bumper retaining screws

5. Slide side bumpers toward the rear to remove them from deck.
6. Slide rear bumper toward the side to remove it from deck.

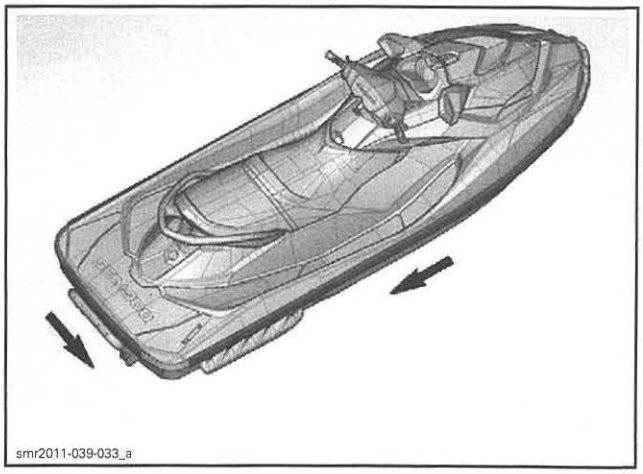

7. Install **new** bumpers as the reverse of removal.

NOTE: Use soapy water to ease bumper installation.

8. Tighten front bumper lower retaining screws to specification.

TIGHTENING TORQUE	
Front bumper **lower** screws	8.0 N•m (71 lbf•**in**)

9. Tighten bumper retaining screws to specification as per the following sequence.

TIGHTENING TORQUE	
Bumper retaining screws	4.5 N•m (40 lbf•**in**)

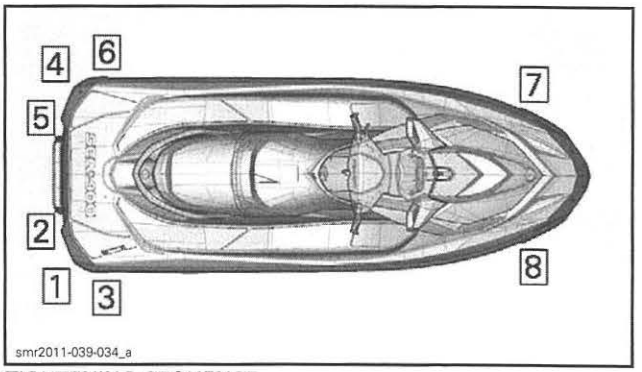

TIGHTENING SEQUENCE

VENTILATION DUCT

Ventilation Duct Replacement

1. Proceed with *LATERAL TRIM PANEL REMOVAL*. See procedure in this subsection.
2. Remove plastic rivet securing ventilation duct to housing.

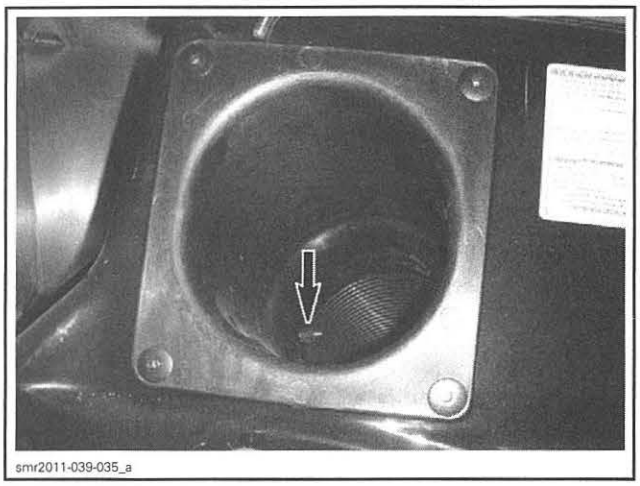
smr2011-039-035_a

3. Remove the following rivets securing ventilation duct housing to deck.

REQUIRED TOOL
SUPERTANIUM DRILL BIT 3/16" (P/N 529 031 800)

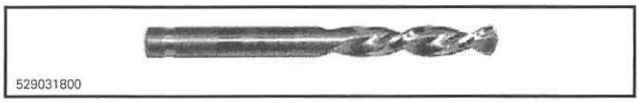
529031800

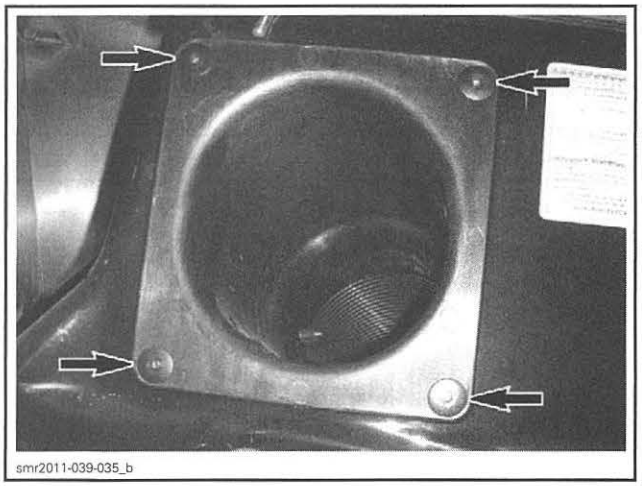
smr2011-039-035_b

4. If applicable, remove locking tie securing wiring harness to ventilation duct.
5. Remove ventilation duct and its housing from watercraft.
6. Reinstall parts as the reverse of removal.

WAKE PYLON (WAKE)

Wake Pylon Removal

Open the seat.

Remove both lateral arms.

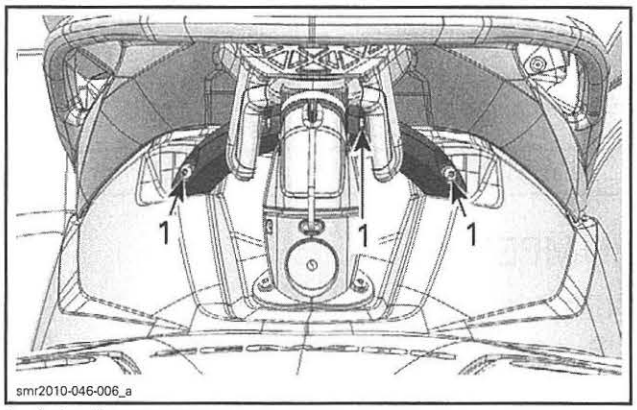

smr2010-046-006_a

1. Lateral arms screws

Remove bolts at the bottom of wake pylon.

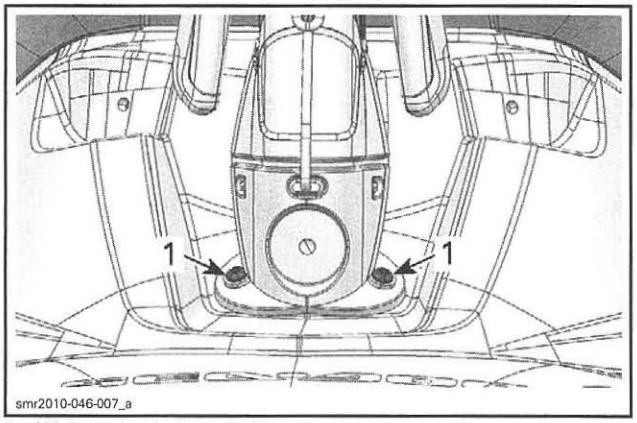

smr2010-046-007_a

1. Wake pylon bottom bolts

Remove bolts securing the wake pylon support to body.

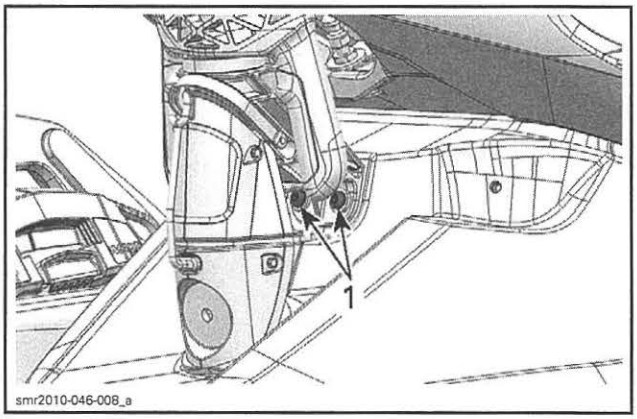

smr2010-046-008_a

1. Wake pylon support bolts

Lift the wake pylon to disengage its bottom from the body.

Slide the bottom of the wake pylon rearward to remove the wake pylon from vehicle.

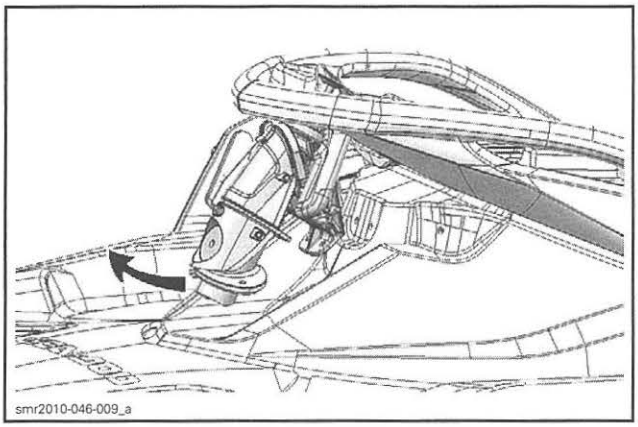

Wake Pylon Disassembly

Extend the handle completely.

Turn the wake pylon upside down.

Move both ends of locking strap to disengage the inner lock and free the handle.

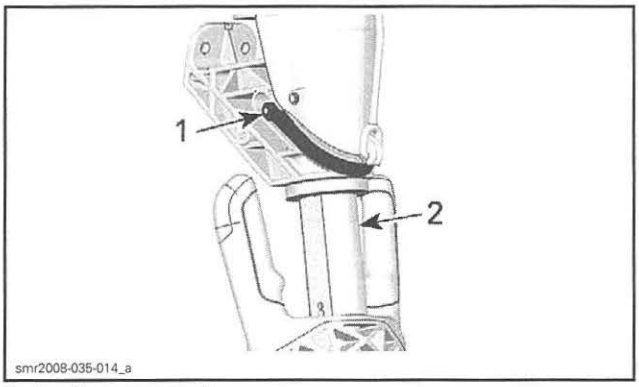

1. *Locking strap end*
2. *Handle stem*

Locking Strap

Using a screwdriver or any other suitable tool, detach a side of the locking strap from retaining pin.

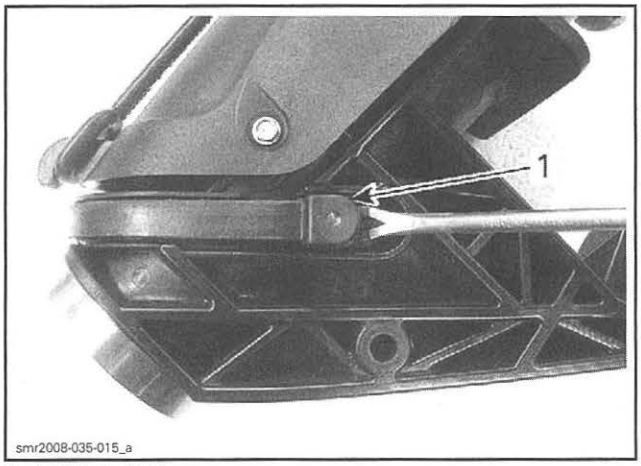

1. *Locking strap*

Remove locking strap and the inner lock.

Handle

Extend handle approximately 75 mm to 90 mm (3 in to 3-1/2 in).

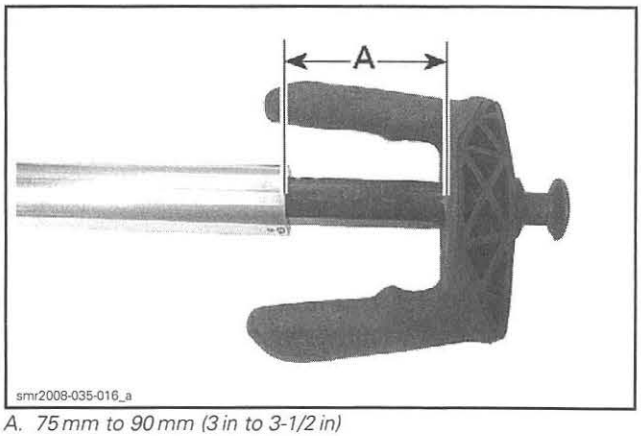

A. 75 mm to 90 mm (3 in to 3-1/2 in)

Insert two thin feeler gauges between handle stem and extension tube.

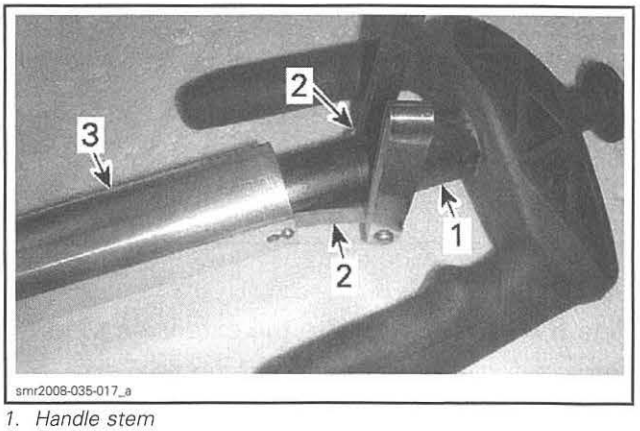

1. *Handle stem*
2. *Feeler gauges*
3. *Extension tube*

Place a rag around the joint to catch balls and spring.

Hold feeler gauges and pull the handle.

Wake Pylon Assembly

Handle

Install a loose locking tie on handle stem.

Apply XPS SYNTHETIC GREASE (P/N 293 550 010) on each ends of spring.

Insert the spring in the handle stem hole.

Position a ball on each ends of spring.

Install a feeler gauge over each balls.

Tighten the locking tie in order to retain feeler gauges and balls.

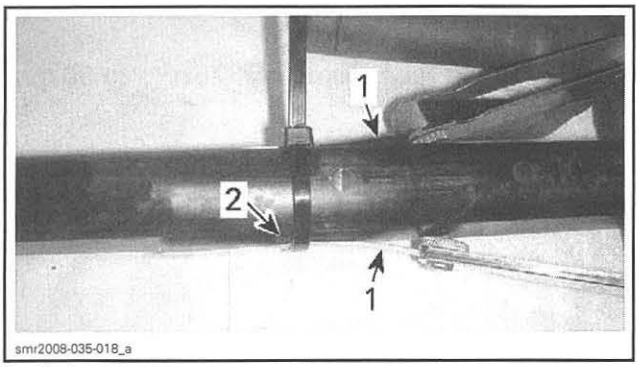

1. *Feeler gauges*
2. *Ball*

Apply XPS SYNTHETIC GREASE (P/N 293 550 010) in both recesses of the extension tube.

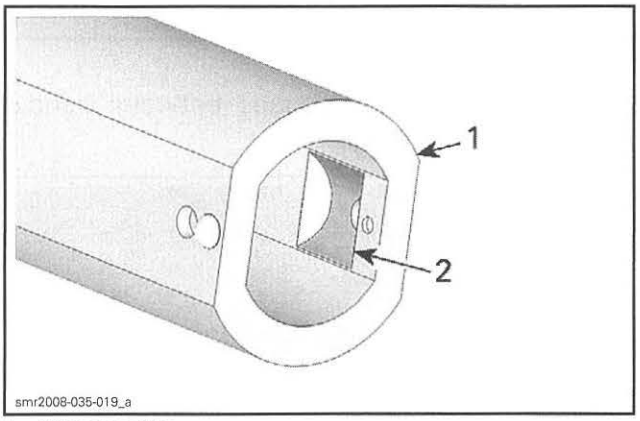

1. *Extension tube*
2. *Recesses*

Slide the handle stem into the extension tube.

Remove feeler gauges and locking tie.

Locking Strap

Remove the wake pylon trim.

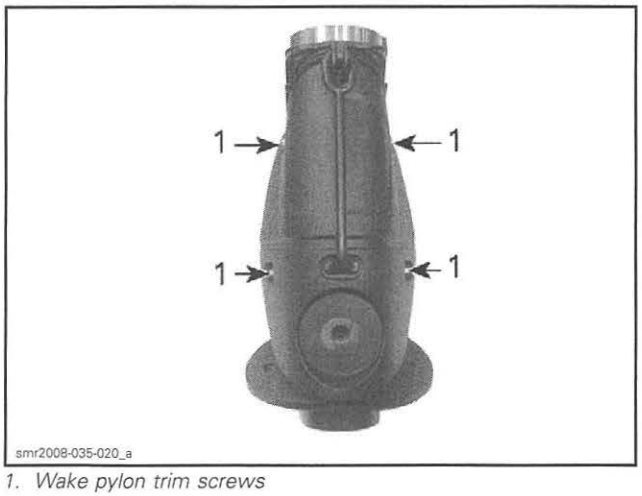

1. *Wake pylon trim screws*

Install lock and insert the end of the locking strap over the retaining pin.

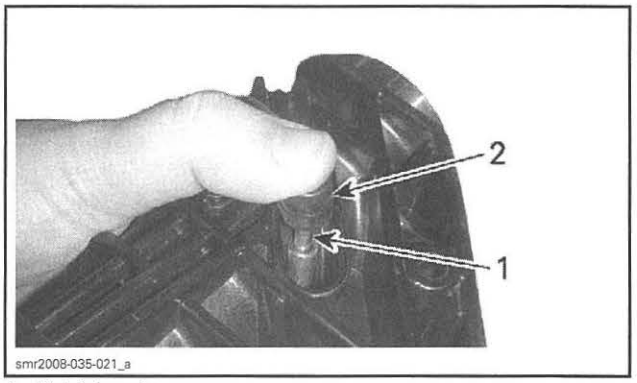

1. *Retaining pin*
2. *Locking strap*

Using a suitable tool, position the locking strap in its groove.

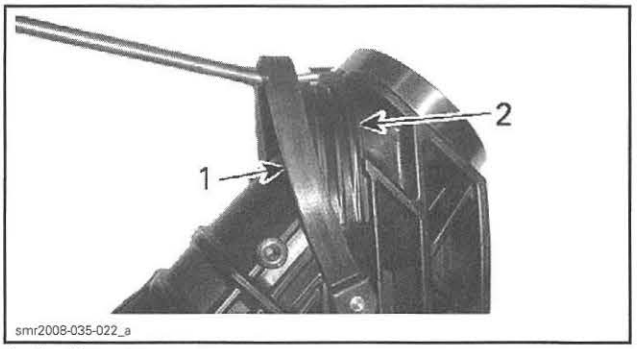

1. *Locking strap*
2. *Locking strap groove*

Reinstall the wake pylon trim.

Do not install the handle into wake pylon yet.

Wake Pylon Installation

Position the wake pylon on deck.

Install and secure wake pylon and lateral arms using previously removed fasteners and new elastic stop nuts.

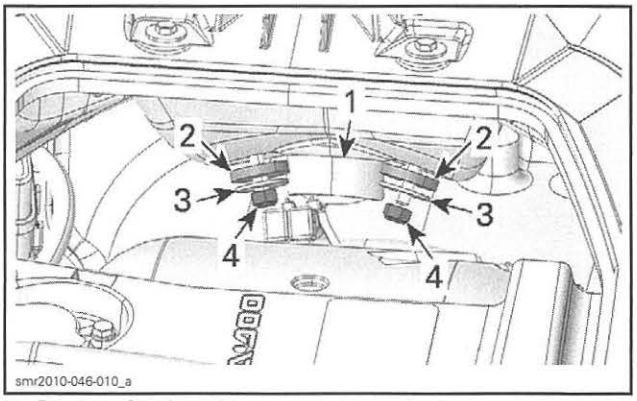

1. *Bottom of wake pylon*
2. *Rubber washers*
3. *Flat washers*
4. *New elastic stop nuts*

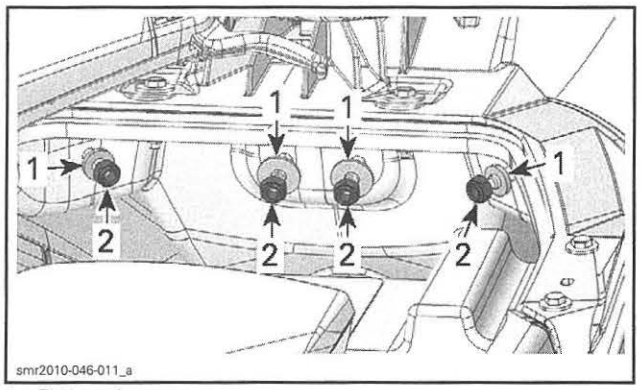

1. *Flat washers*
2. *New elastic stop nuts*

Tighten all bolts by hand.

Ensure base of wake pylon is well leaned against body.

Tighten all bolts as per the following sequence.

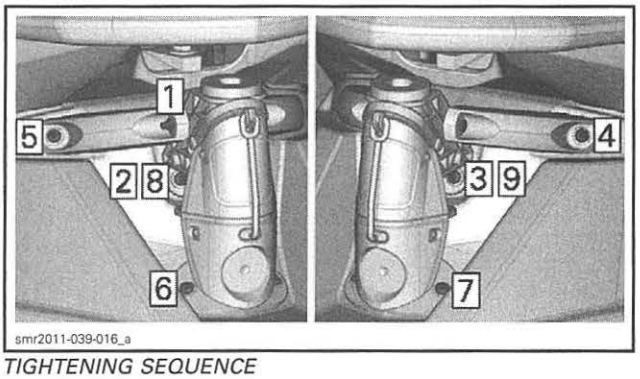

TIGHTENING SEQUENCE

Insert the handle into the wake pylon.

Move both ends of the locking strap forward to fully insert handle.

BODY (RXT/GTX/WAKE PRO)

SERVICE TOOLS

Description	Part Number	Page
SUPERTANIUM DRILL BIT 3/16"	529 031 800	638

SERVICE PRODUCTS

Description	Part Number	Page
LOCTITE 243 (BLUE)	293 800 060	632
LOCTITE 414	413 705 800	630, 648
LOCTITE 5150 (SILICONE SEALANT)	296 000 309	643
XPS MULTI-PURPOSE CLEANER	219 701 709	631
XPS SYNTHETIC GREASE	293 550 010	660

BODY (MODELS WITH SUSPENSION)

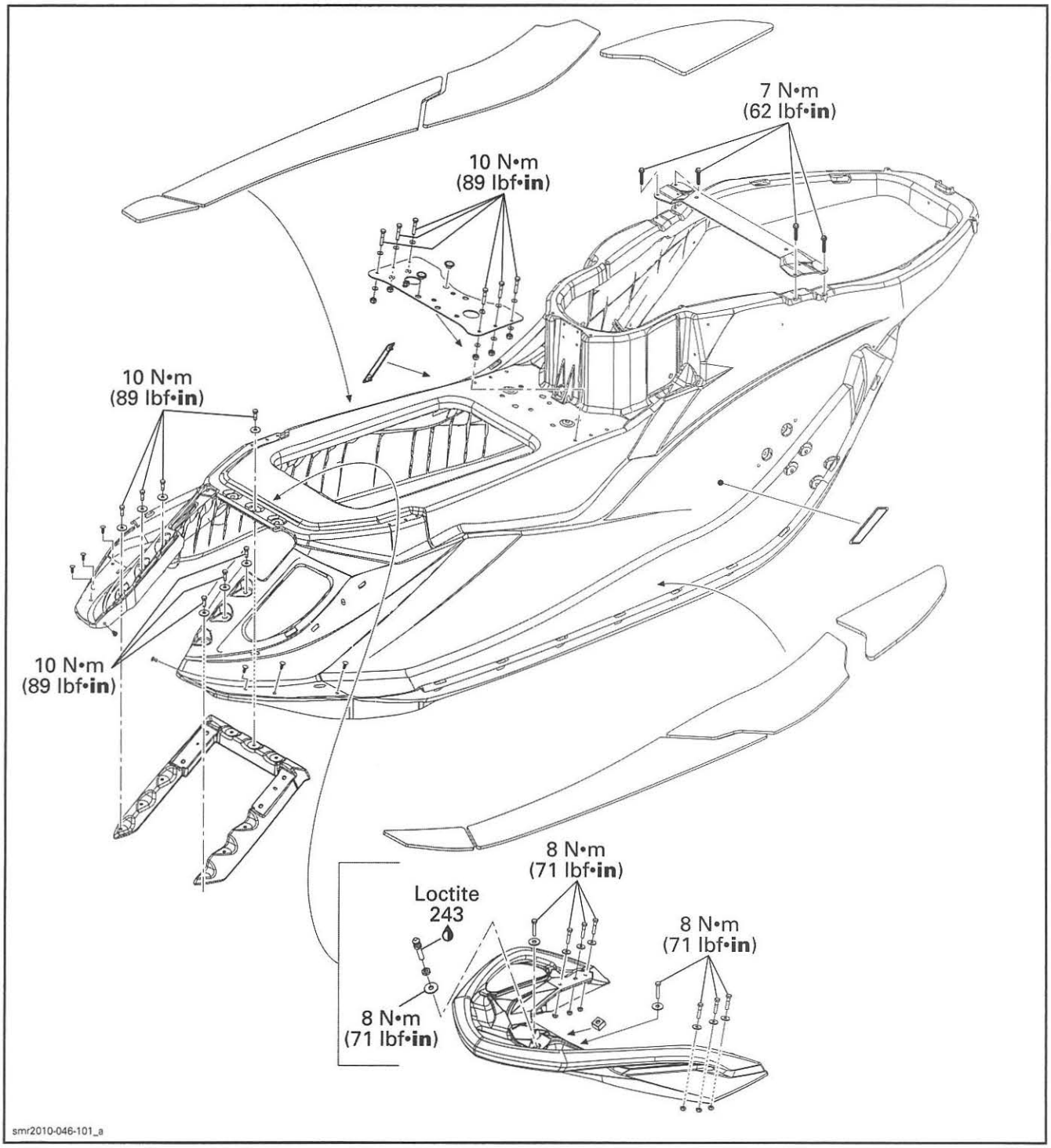

BODY (MODELS WITH SUSPENSION)

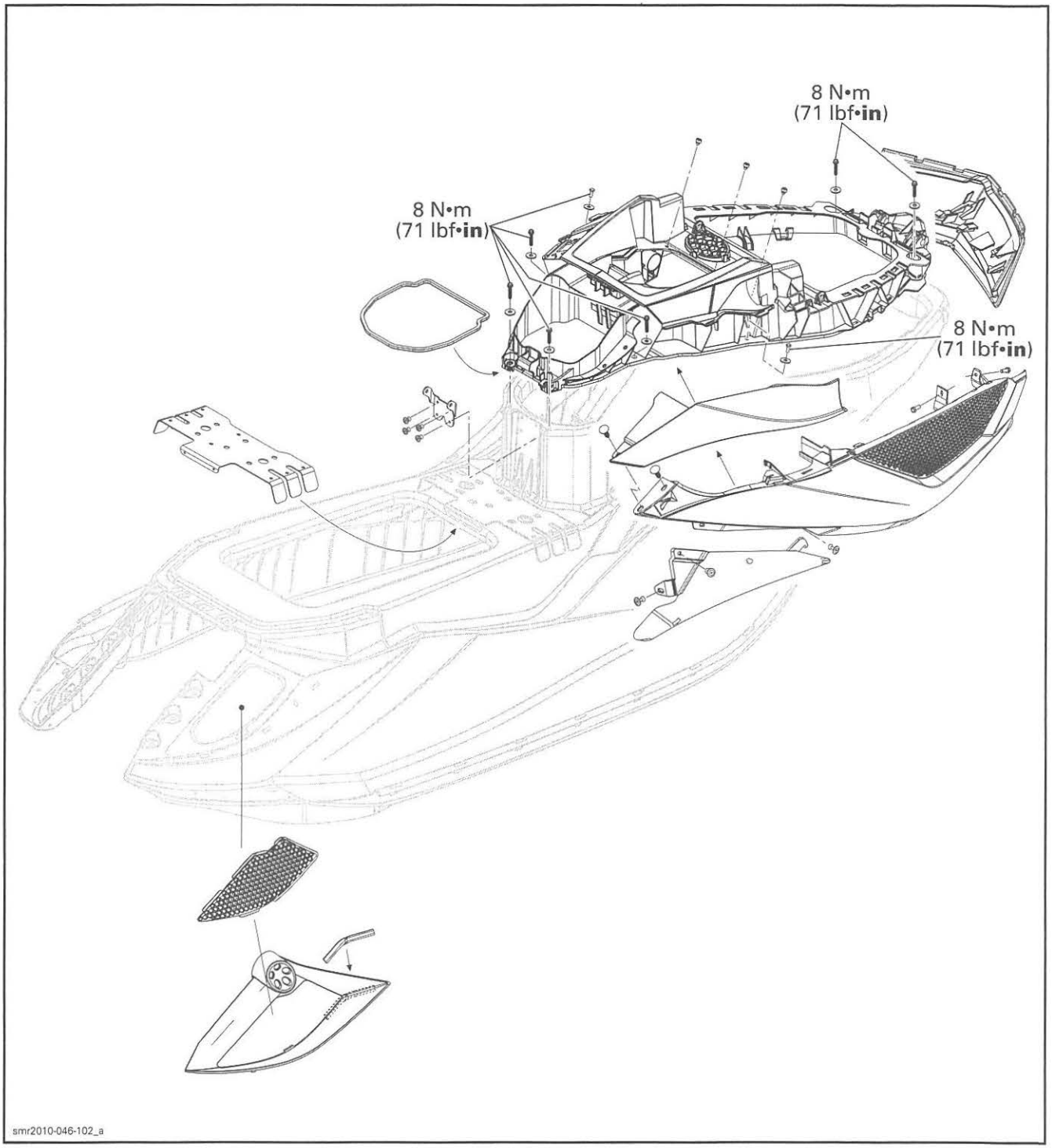

BODY (MODELS WITH SUSPENSION)

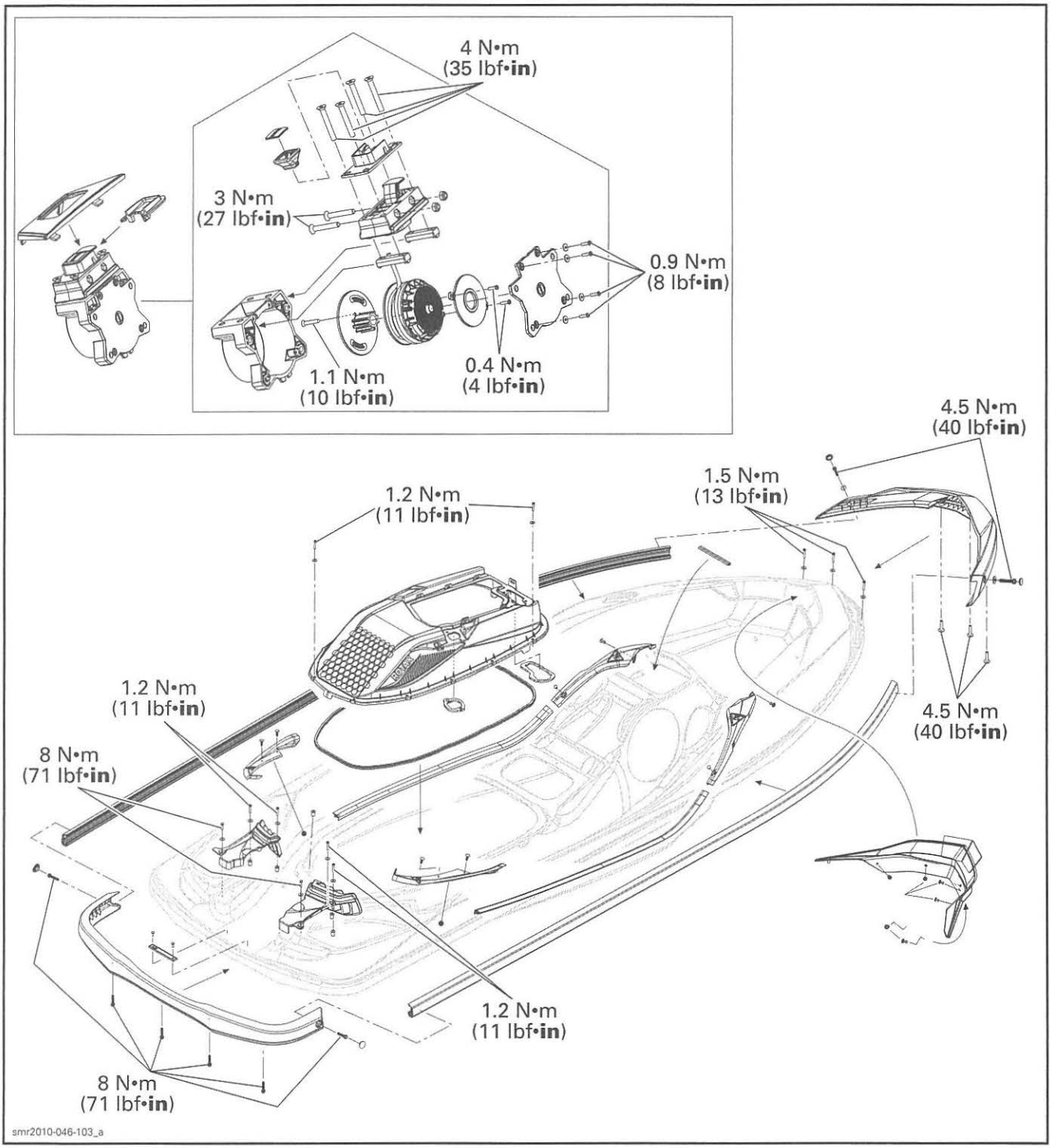

BODY (MODELS WITHOUT SUSPENSION)

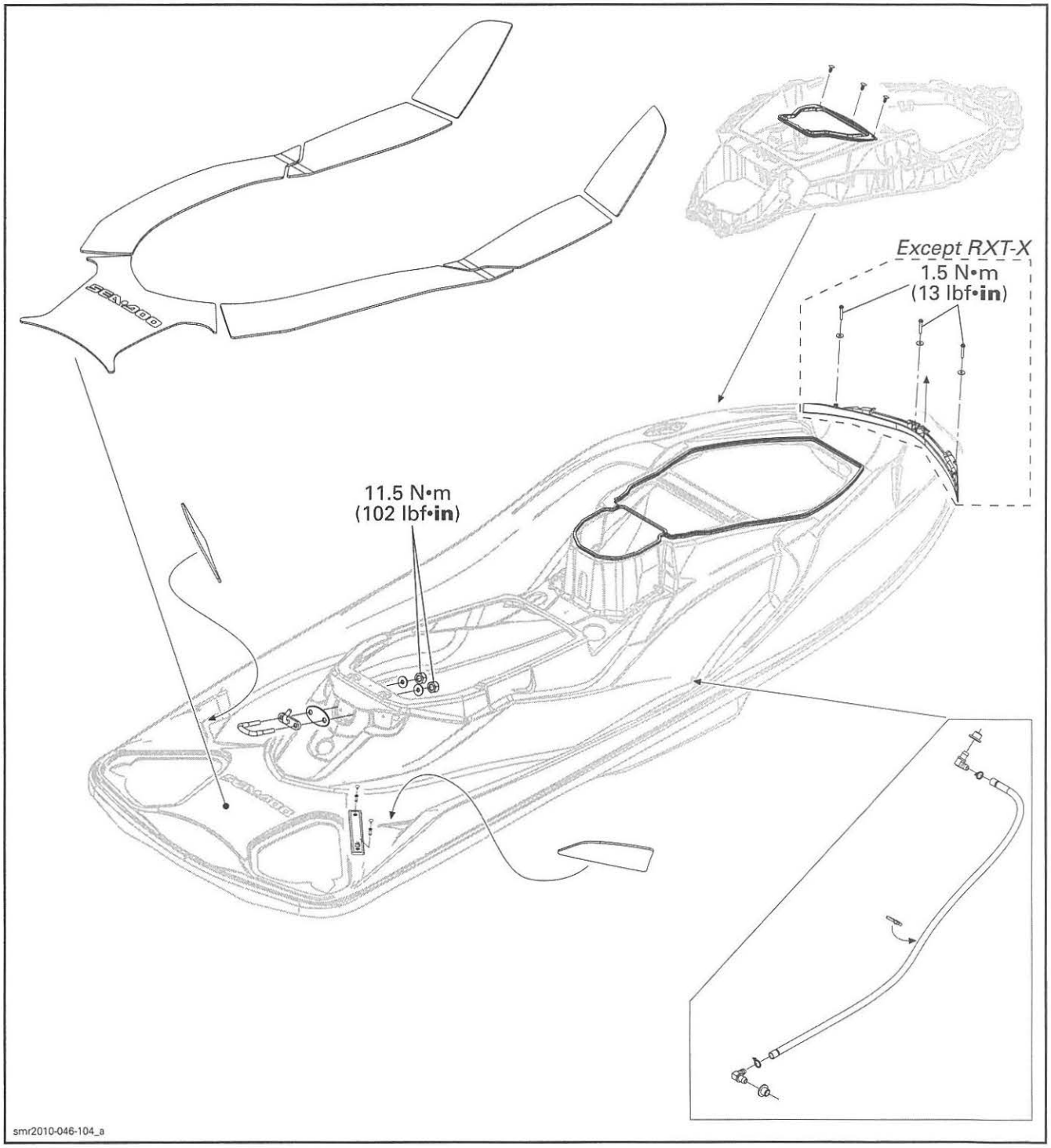

BODY (MODELS WITHOUT SUSPENSION)

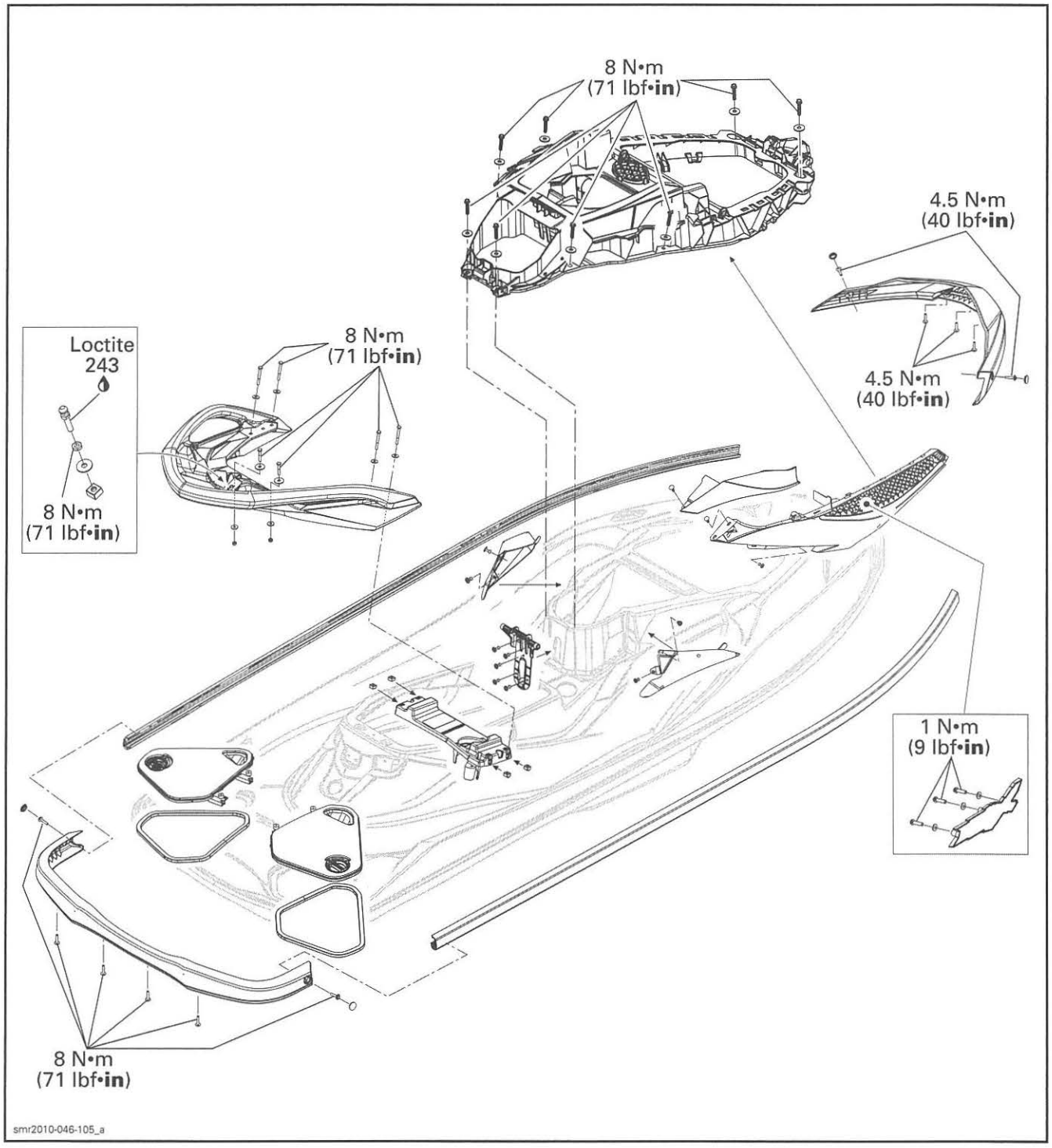

STORAGE COMPARTMENT (MODELS WITH SUSPENSION)

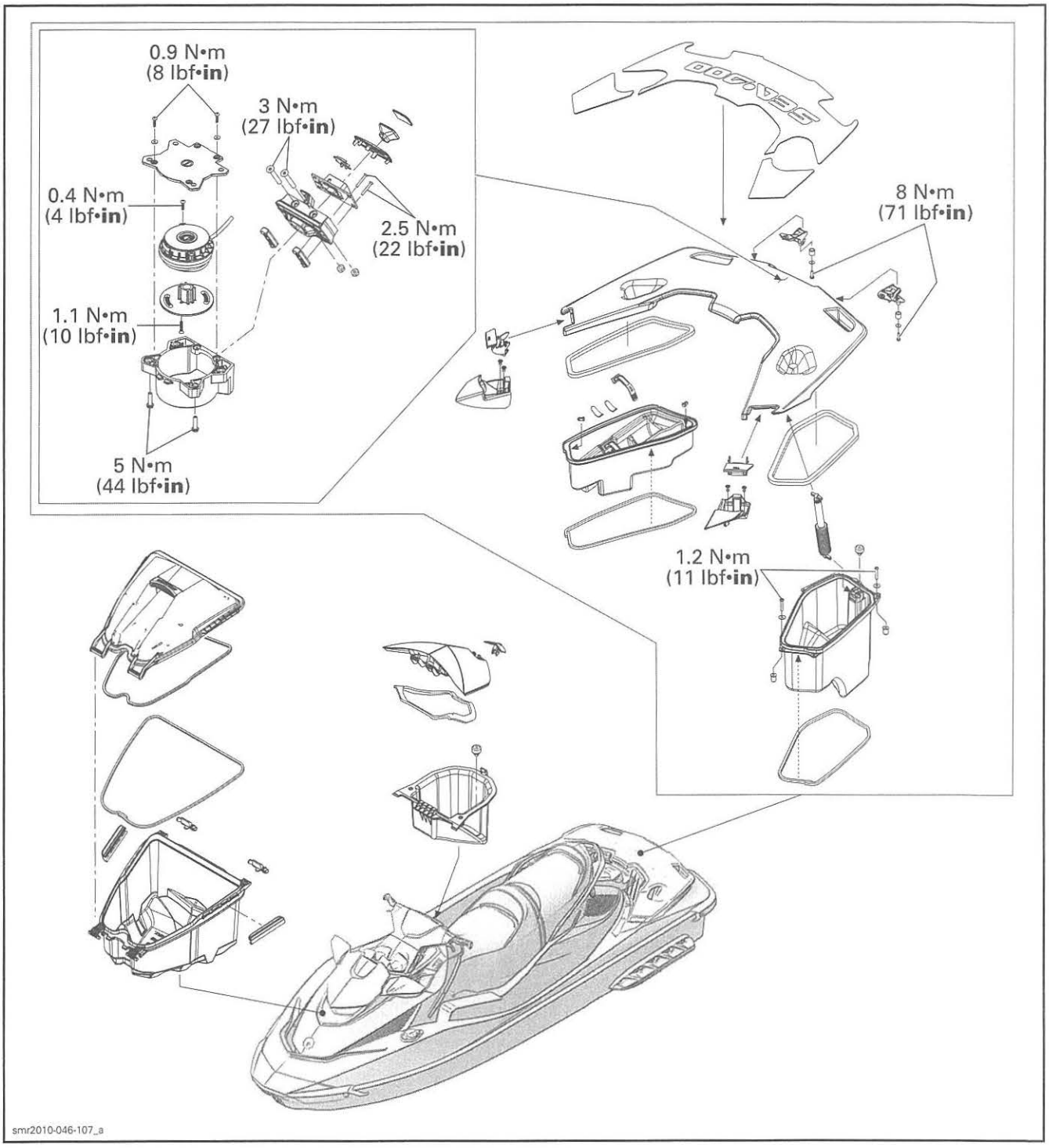

STORAGE COMPARTMENT (MODELS WITHOUT SUSPENSION)

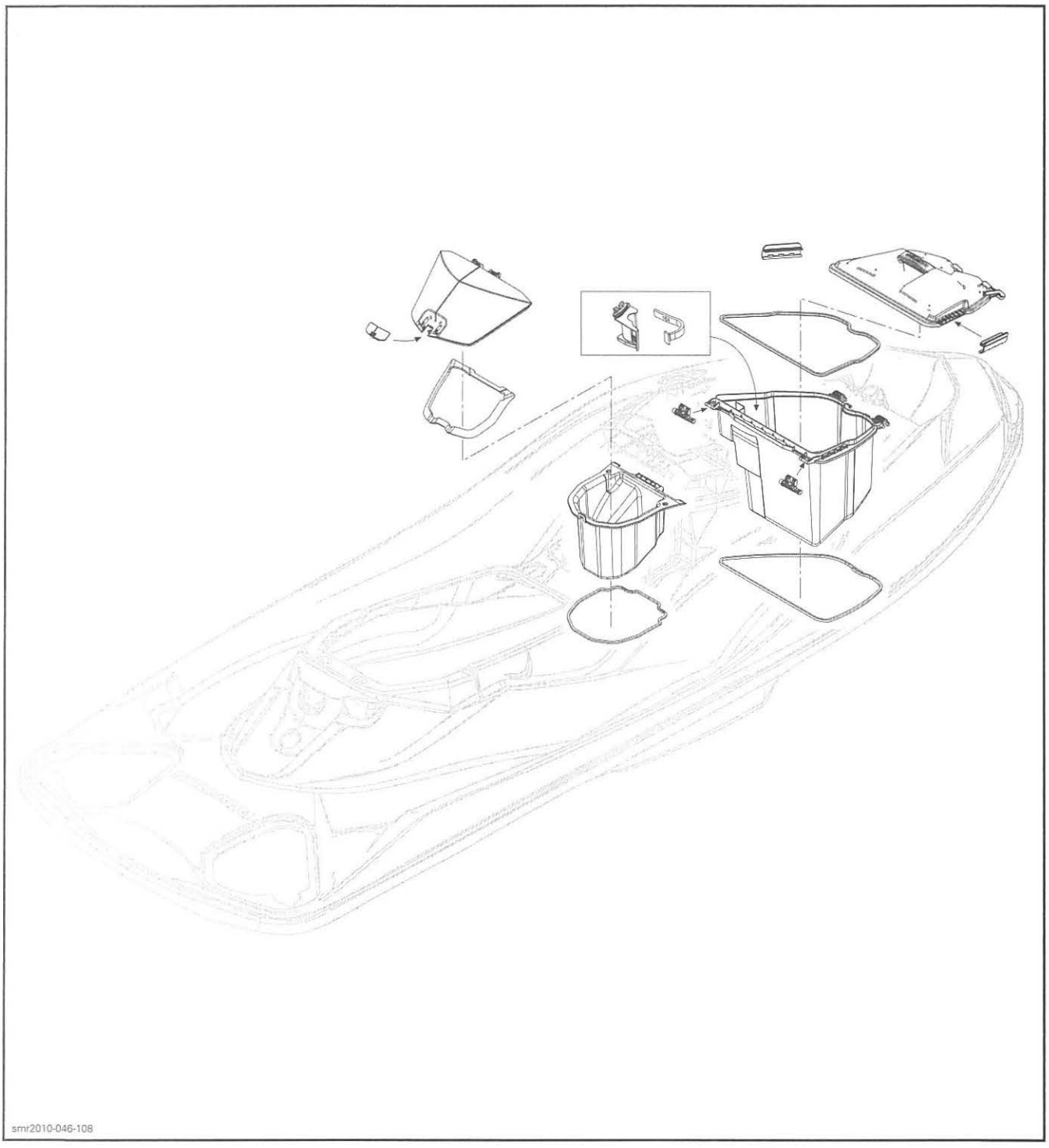

smr2010-046-108

VENTILATION (MODELS WITH SUSPENSION)

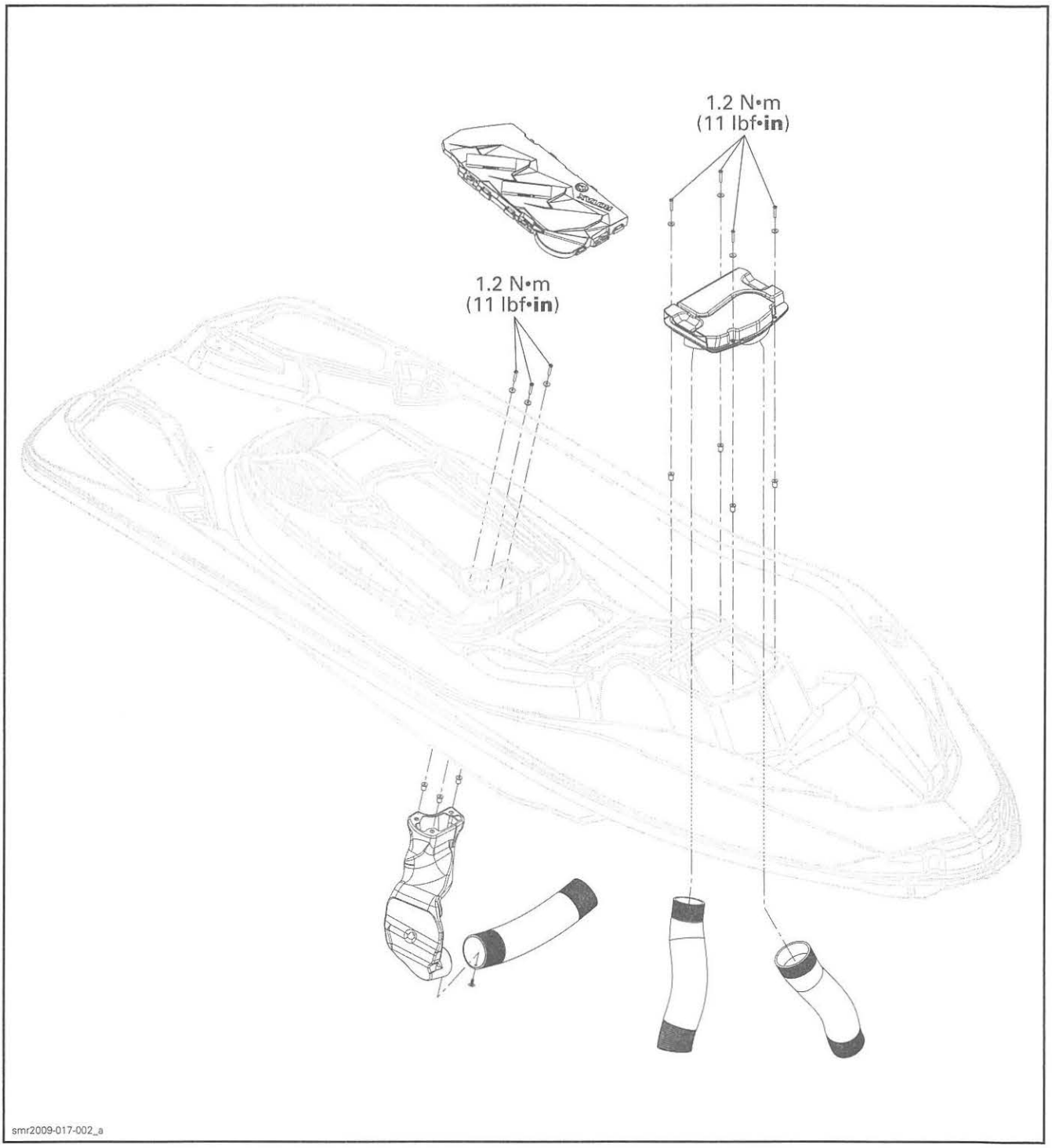

VENTILATION (MODELS WITHOUT SUSPENSION)

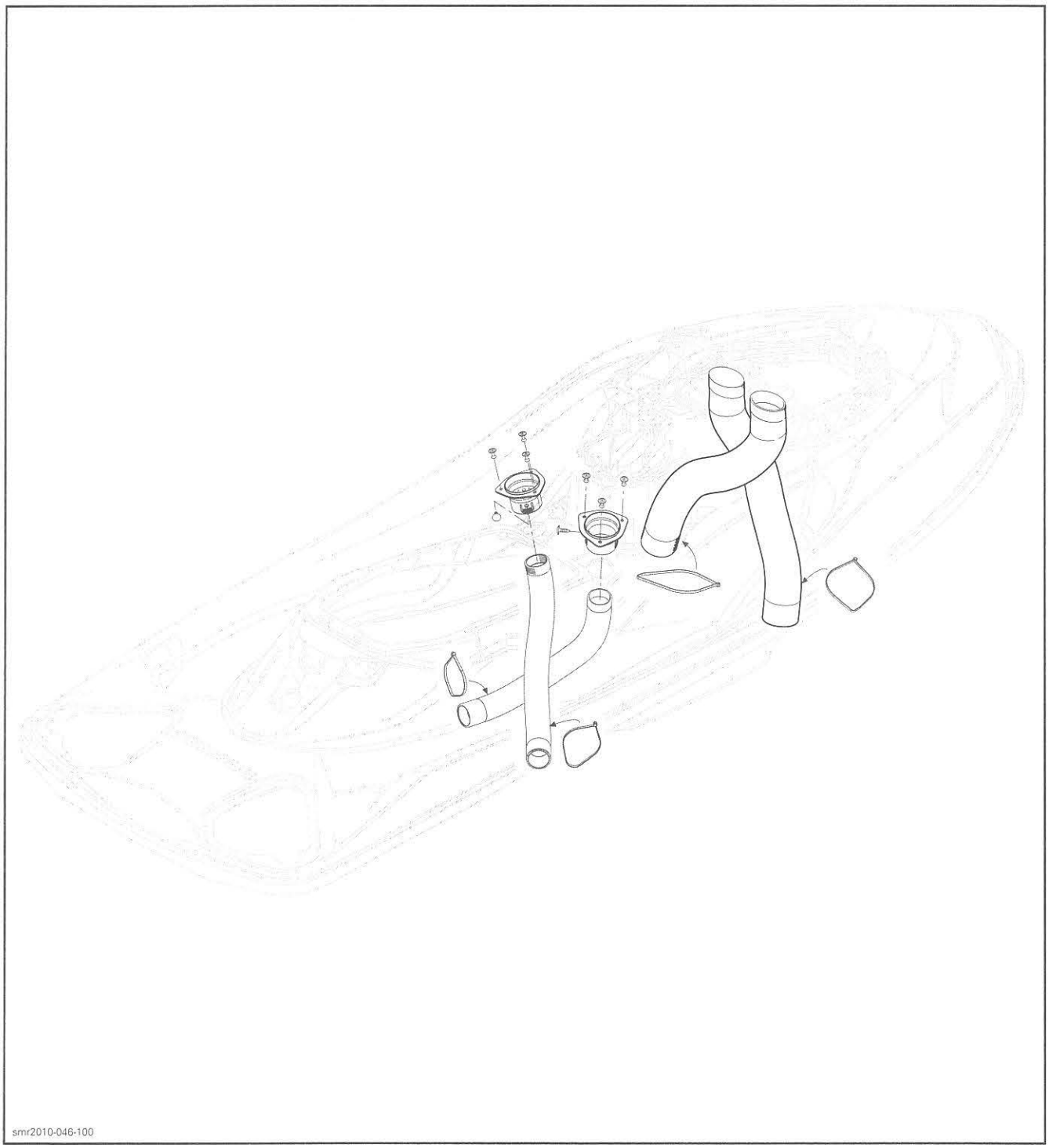

smr2010-046-100

FRONT COVER

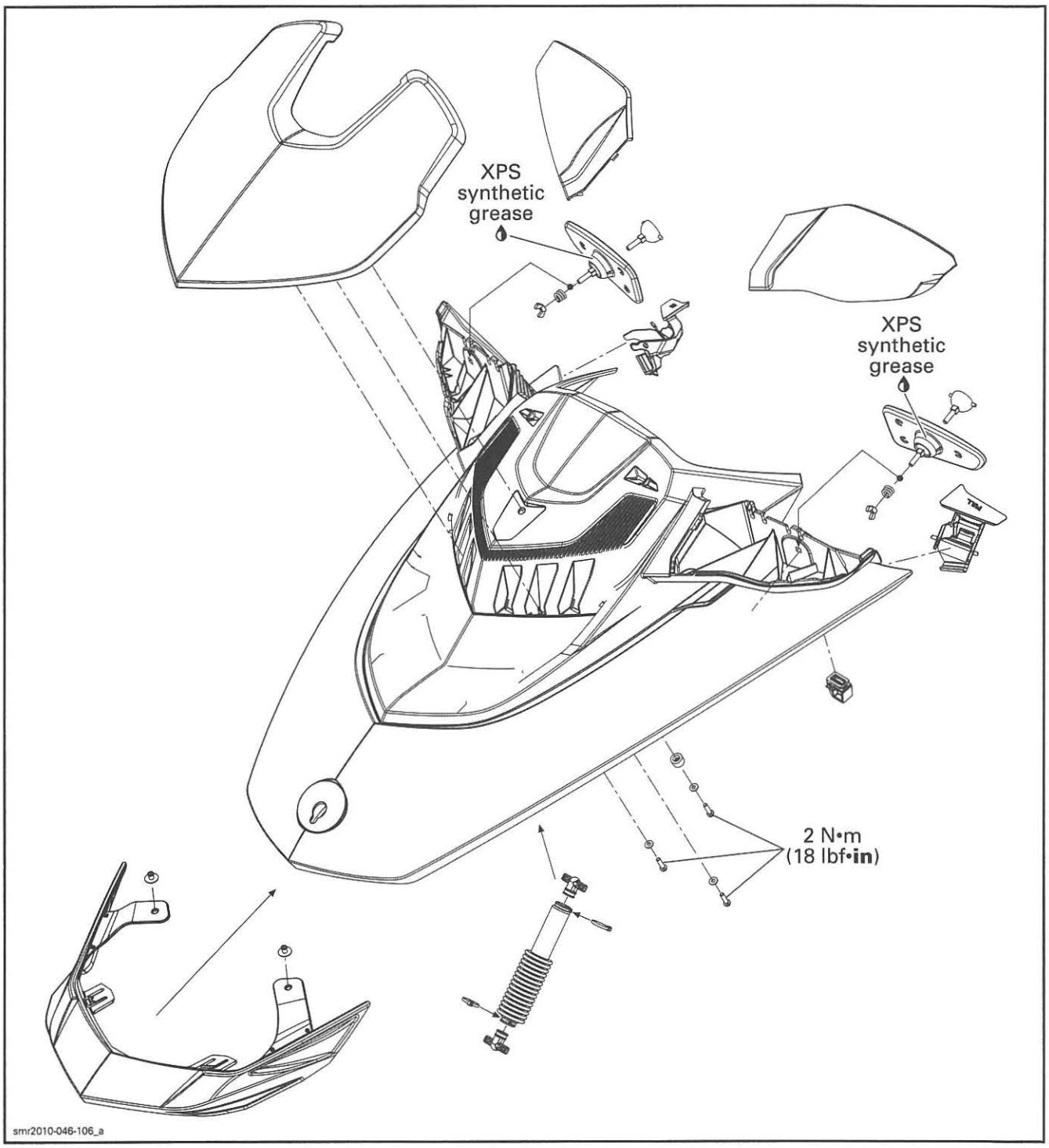
XPS synthetic grease
XPS synthetic grease
2 N•m (18 lbf•in)
smr2010-046-106_a

SEAT

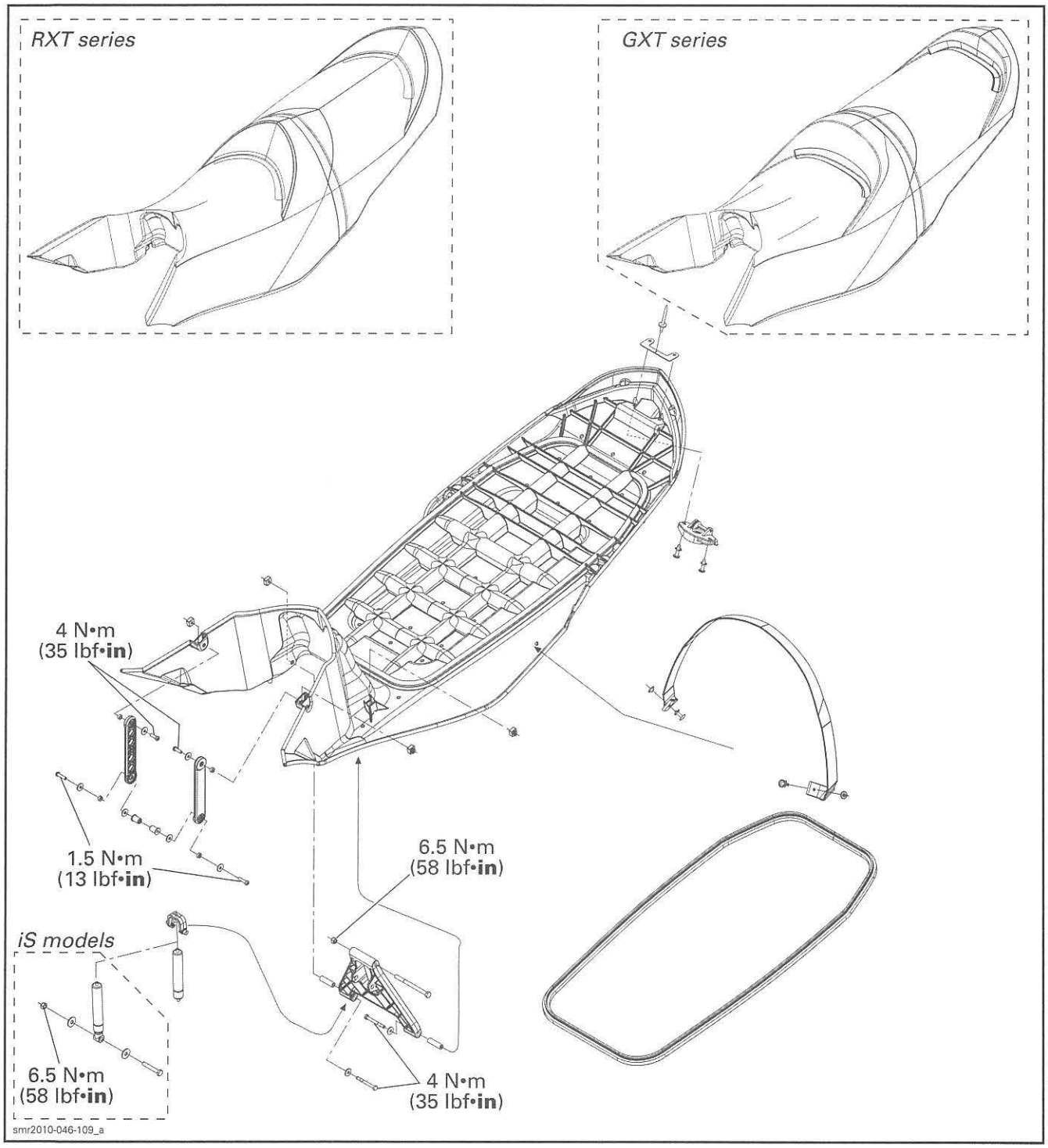
RXT series
GXT series
4 N•m
(35 lbf•in)
1.5 N•m
(13 lbf•in)
6.5 N•m
(58 lbf•in)
iS models
6.5 N•m
(58 lbf•in)
4 N•m
(35 lbf•in)
smr2010-046-109_a

WAKEBOARD RACK AND WAKE PYLON

Wake Pro

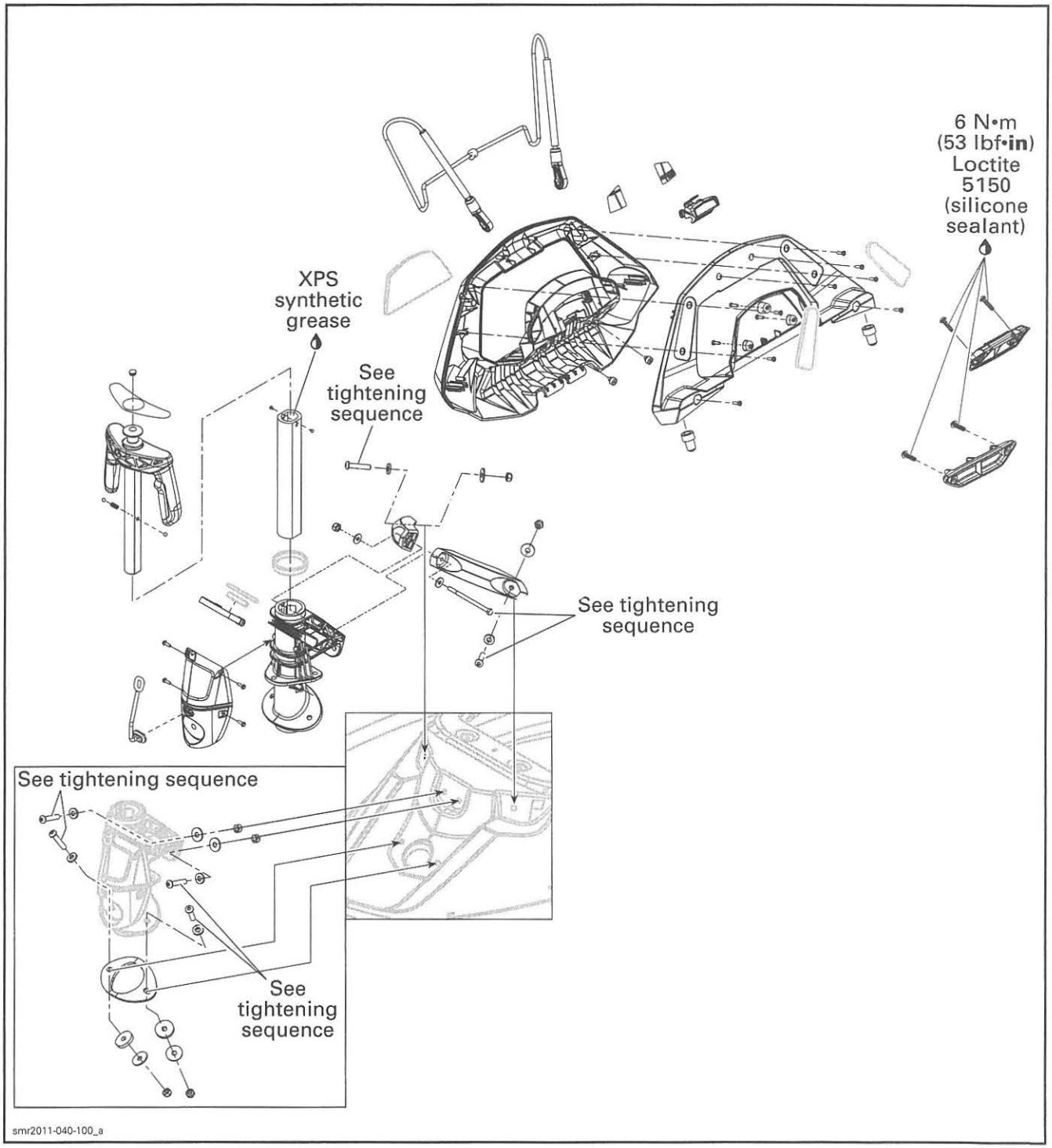

PROCEDURES

GELCOAT

The deck is constructed of chopped fiberglass, saturated with resin. It is sprayed on the layer of gelcoat along with pieces of fiberglass mat, cloth and woven roving which are added at required areas.

For the hull, a different material is used and a standard polyester based fiberglass repair kit **will not work**. Refer to *HULL* subsection for proper material and procedures.

Gelcoat Repair Information

All liquid gelcoat and repair kits can be purchased directly from Gelcote International Ltd. BRP does not distribute these products.

NOTE: Fiberglass repair kit is also available through automotive or marine suppliers.

Gelcote International Ltd web site has all the Sea-Doo personal watercraft and sport boat gelcoat colors.

You can order on the web site and get confirmation of your order within hours. Quick, reliable service is what is offered to all BRP dealers around the world.

There are many services on this web site to make your ordering quick and informative. Or you can call Gelcote International directly with any question pertaining to gelcoat. Service, value and knowledge is what you can expect when you call Gelcote International.

Gelcote International Ltd
174 Colonnade Road Suite 29
Ottawa, Ontario
Canada, K2E 7J5

Phone: (613) 225-2177
Phone: (877) 435-2683 (Toll Free)
Fax: (613) 225-5297

Web Site: www.gelcoat.ca
E-mail: info@gelcote.com

⚠ WARNING

Protect skin, wear gloves when in contact with resin, hardeners and gelcoat. A barrier skin cream may also be used. Do not expose area to open flame or lit cigarette. Some of the materials are flammable. Protect eyes, wear safety glasses when grinding, sanding or spraying. Use a dust mask when sanding or grinding. When spraying wear a respirator or paint mask. Always read warning labels on products.

TOOLS	
Air mask	Power sander
Buffing pda	Putty knife
Cover sheets	Safety glasses
Heavy-duty polisher	Sanding block
Paint bruhs	Scissors
Plastic container (mixing)	Spray gun
Plastic film	Stirring stick
Plastic squeegee	White cloths

MATERIALS	
Acetone	Epoxy filler
Cabosil	Masking tape
Cardboard	Liquid gelcoat
Fine compound (white)	Medium compound (white)
Fiberglass cloth	Polyester resin
Fiberglass mat	24-grit sanding disks
Gelcoat putty	Wax
Sandpaper (100-grit, 220-grit, 320-grit, 400-grit, 600-grit, 1000-grit)	

Air Bubbles Repair

Possible cause:

- Air pocket trapped between layers of laminate and gelcoat.

Preparation of Surface

Remove all of the damaged gelcoat surrounding the air bubble with a putty knife or preferably a carbide grinding tip. Make sure all loose and weak areas are completely removed. Sand a small area of the gelcoat surface with 220-grit sandpaper. If needed, sand the cavity itself. These areas must have a rough surface to allow the gelcoat putty to bond properly.

Filling the Cavity

The prepared surface must be cleaned with acetone on a cloth. Use a gelcoat repair kit. Follow the mixing instructions in the kit when preparing the gelcoat putty.

Carefully mix the required amount while making sure there are no air bubbles in the mixture. With a putty knife, fill the repair area and cover with plastic film. Curing time may depend on temperature, amount of putty and percentage of catalyst. After 2 hours, press lightly on the surface with fingers to test the hardness. When the area becomes hard, remove the plastic film.

Sanding

Begin block sanding the patch with 320-grit sandpaper until you come close to the original surface. Remove dust with a water soaked cloth and continue sanding with a 400-grit wet paper. Finish wet sanding with a 600-grit to remove deeper scratches. If needed you can wet sand with finer grit paper such as 1000-grit.

Buffing and Waxing

Buff the surface using a heavy duty polisher with a buffing pad. Make sure the pad is free of dirt or you may damage the gelcoat. Carefully begin buffing with a white medium compound. Finish off using a fine compound. While buffing, pay close attention to avoid overheating the surface.

Blisters Repair

Possible causes:

- Insert catalyst
- Improper catalyst/gelcoat ratio.

A blister is a visible bump on the watercraft surface that may not necessarily come right through the gelcoat layer. In the case of only a few blisters, follow the same repair procedure as for air bubbles. If they are numerous and in close concentration, spray liquid gelcoat to achieve proper repair. This procedure is covered in *MINOR GELCOAT FRACTURES*.

Minor Gelcoat Fractures Repair

Possible causes:

- Flexing of fiberglass laminate
- Gelcoat thickness
- Direct result of impact.

In case of fractures which have not penetrated past the gelcoat layer, the repair concerns the gelcoat only. If flex cracking or impact are evident, then additional reinforcement may be necessary. This subject will be covered in *COMPOUND FRACTURES*.

Preparing the Surface

Small Fractures: Open the cracks up with a sharp triangular can opener or preferably a carbide tipped die grinder. The V groove will provide a good bonding area for the gelcoat. With 220-grit sandpaper, sand the sides of the notched out areas.

Numerous Fractures: Using a grinder with a 24-grit disk, remove the gelcoat. Sand the area edge with 220-grit sandpaper.

Filling the Repair Area

Small Fractures: Refer to the same procedure as in the *AIR BUBBLES*.

Numerous Fractures Over Large Surface: Prepare the area for spray application of liquid gelcoat. Wipe down the surface with acetone. Mask the area off to protect the watercraft from overspray.

Mix the needed quantity of gelcoat and catalyst according to suppliers recommendations. The gelcoat can be thinned with acetone up to 10%. If it needs more consistency you can add cabosil.

Make sure that the air supply is free of oil, dirt and water.

Test spray the gelcoat mixture on paper to verify its consistency and pattern. You may have to apply 5 or 6 coats to cover the area properly. Overlap each coat further than the last, leaving at least 30 seconds between passes. Avoid trying to coat the surface with only a few heavy coats, this will not allow the gelcoat to dry properly.

Apply a coat of polyvinyl alcohol (PVA) to seal off the air and protect the gelcoat surface from dust. PVA speeds up the curing process because gelcoat will not cure properly when exposed to air.

Sanding

Wash the polyvinyl alcohol off with water. Depending on the size of the area repaired, you can either block sand as per previous procedure or you may use an air sander. Sand the surface down with progressively finer grits of sandpaper until the desired finish is achieved.

Buffing and Waxing

Buff the surface using a heavy duty polisher with a buffing pad. Make sure the pad is free of dirt or you may damage the gelcoat. Carefully begin

buffing with a white medium compound. Finish off using a fine compound. While buffing, pay close attention to avoid overheating the surface.

Compound Fractures Repair

Possible causes:

- Thickness of fiberglass laminate
- Direct result of impact.

Compound fractures are those that have gone past the gelcoated surface and in through the layers of fiberglass laminate. Two types of repairs have to be performed. The first is to restore the structural integrity of the damaged area. Fracture types can vary from a simple crack to a large hole. Usually, fiberglass reinforcement becomes necessary, especially if the fracture can be attributed to weakness. The final part of the repair is the gelcoating, which cannot be done until the interior and exterior laminate surfaces have been repaired.

Outside: Remove the damaged gelcoat and fiberglass with a 24-grit disk using a power sander. Grind outward at least 2 inches from the fracture to allow the patch to bond to strong material. Cut enough pieces of fiberglass mat necessary to build up the area. The pieces should be cut so they overlap each other by at least a half inch. For a smoother finish, the last layer should be fiberglass cloth. If the fracture is small enough all you may have to do is fill the area with an epoxy filler.

Inside: For the interior repair, you can grind more. This will allow for more fiberglass material which will strengthen the area. If the fracture opening is too large after surface preparation, you may need a backing support to cover the opening. Cut alternating pieces of fiberglass mat and cloth in overlapping sizes.

Patching the Repair Area

Outside: The outside should be done first. Wipe clean the area with acetone on a cloth, then mask off area. For a small crack use an epoxy filler in the same way you would use gelcoat repair putty. When laying up a larger area you will use mat, cloth and fiberglass resin and catalyst. Use a clean container to mix the resin, mix only what you will need. Follow the recommended catalyst ratio.

Using a clean paintbrush, brush the mixed resin on the surface. Place the smallest piece of mat over the fracture and then wet out the mat. Follow with the remaining pieces of mat and final layer of cloth. While wetting the pieces make sure you work the air bubbles out and saturate all the pieces evenly. Try to work quickly, you may only have 15 or 20 minutes. You may clean the brush with acetone.

Wait until the repair has hardened before moving on to the interior repair. If the size of the opening is too large for the pieces to maintain the proper shape, you will have to use a backing support. It is a shaped piece of cardboard that fits flush to the interior surface and has a plastic layer on the repair side. It is held in place by tape or a support.

Inside: Wipe down the area with acetone on a cloth. Apply the same procedure as for outside repair when laminating the alternating pieces of fiberglass material. If a backing support was used, remove it before starting the repair. After the area has hardened, remove sharp edges of material from surface. If required paint the surface.

Sanding

Outside: This surface will have to be prepared for application of gelcoat. The size of the area will determine the gelcoating procedure to be used. Refer to the *MINOR GELCOAT FRACTURES REPAIR.*

Buffing and Waxing

Refer to the *BUFFING AND WAXING* in *MINOR GELCOAT FRACTURES REPAIR.*

DECALS

Decal Removal

Using a heat gun warm up one end of decal for a few seconds until decal can roll off when rubbing with your finger.

NOTE: When heating near light surfaces, duct tape should be applied to protect the surface. Otherwise the light color could become a yellowish color.

Pull decal slowly and when necessary apply more heat to ease removal on the area that has to be peeled off.

If decal tears while pulling off, it has to be heated for a few seconds longer. If decal tends to stretch while pulling off, stop heating and wait a few seconds to let it cool, then peel it off.

Decal Installation (with a Protective Film on Back Side)

These decals usually contain written information (e.g.: warning) and are used on gelcoat or metal.

Using isopropyl alcohol, clean the surface and dry thoroughly.

Using a pencil and the decal as a template, mark the area where decal will be located.

Remove half of the decal back protective film and align decal with marks. Start sticking it from center and remove the other half of the film to stick it completely. Carefully squeegee decal beginning at center and working outward using, firm, short, overlapping strokes.

Decal Installation (with a Protective Film on Both Sides)

These decals usually contain graphics and are used on gelcoat or plastic.

Installation on Gelcoat

Using isopropyl alcohol, clean the surface and dry thoroughly.

Using a pencil and the decal as a template mark the area where decal will be located.

For better adhesion a dry application is recommended, however, to ease decal installation a mild solution of soapy water can be sprayed over surface where decal will be installed.

Remove back protective film from decal and align decal with marks. When well aligned squeegee decal beginning at center and working outward using firm, short, overlapping strokes.

Remove front protective film once decal has adhered to hull.

Installation on Plastic Surface (Storage Cover)

Clean surface with isopropyl alcohol and dry thoroughly.

Using a pencil and the decal as a template, mark the area where decal will be located.

NOTICE **Do not use soapy water to locate decal on plastic parts.**

Remove back protective film from decal and carefully align decal with marks. When well aligned squeegee decal beginning at center and working outward using firm, short, overlapping strokes.

Remove front protective film once decal has adhered.

CARPETS

Carpet Cleaning

To clean the carpets, use 3M™ Citrus Base Cleaner or the equivalent. See the manufacturer's instructions.

Carpet Removal

Unstick a carpet corner.

Pull carpet vigorously to remove the carpet and its glue from body.

To remove the remaining glue from body, use a plastic or rubber spatula. Scrape remaining glue with spatula.

NOTE: Do not use any products (alcohol, acetone, thinner, etc.) or heat the remaining carpet glue. Chemical reactions make glue very hard to remove.

Carpet Installation

Clean body surface with isopropyl alcohol and dry thoroughly.

Install new carpet.

STORAGE COMPARTMENT COVER

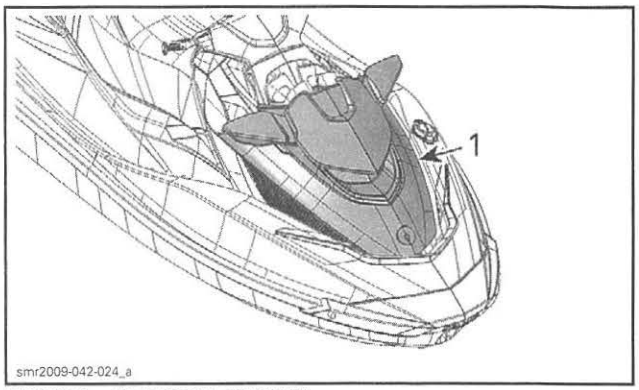

TYPICAL – iS MODEL SHOWN
1. Storage compartment cover

Storage Compartment Cover Removal

1. Open cover.
2. Cut locking tie retaining the bellows of gas shock.

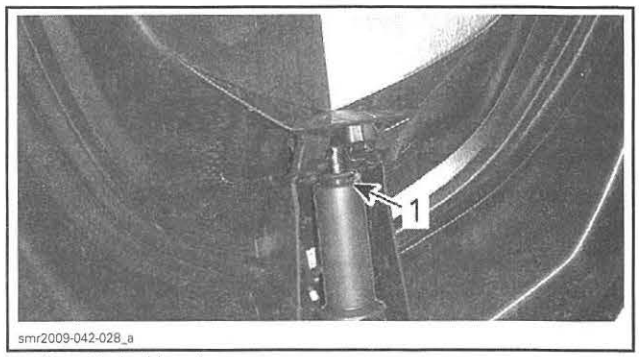

1. Cut this locking tie

3. Move bellows downward.

4. Unscrew gas shock from its upper attachment.
5. Remove gas shock from vehicle.
6. Open cover completely.
7. Align cover hinge keys with front body module slots.
8. Pull up cover to remove it.

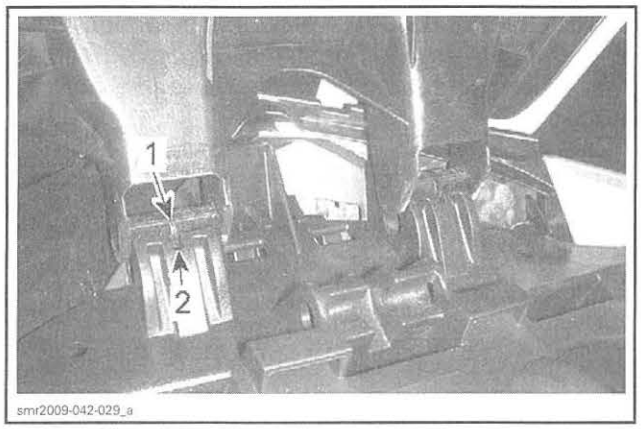

1. Cover hinge key
2. Front body module slot

Storage Compartment Cover Installation

The installation is the reverse of the removal procedure. However, pay attention to the following.

Remove gas shock attachment from cover.

Apply LOCTITE 414 (P/N 413 705 800) on threads of shock absorber body.

Tighten manually the attachment on gas shock.

Install the bellows and secure it using a locking tie.

Install the gas shock on cover.

NOTE: The corrugated section of bellows must point downward.

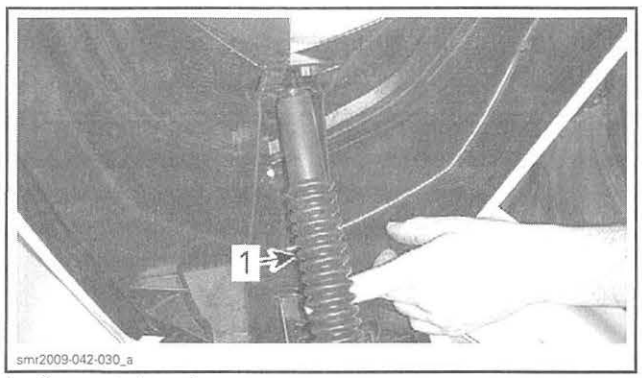

1. Corrugated section

Install cover on vehicle.

NOTICE Make sure to insert cover hinges completely. A click must be heard to indicate complete insertion.

Position the gas shock lower attachment on cavity opening.

NOTICE To avoid breaking the attachment, do not force to insert it in cavity.

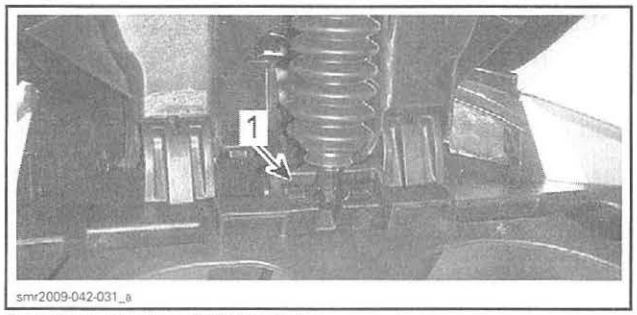

1. Lower attachment in its cavity

Close cover to lock the bottom of the gas shock.

GLOVE BOX COVER

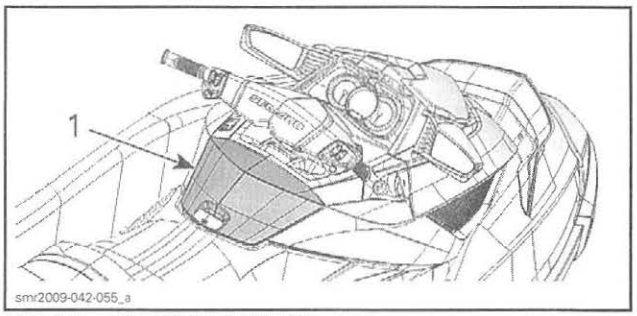

TYPICAL - iS MODEL SHOWN
1. Glove box cover

Glove Box Cover Removal

1. Move steering in its upper position.
2. Open glove box cover until cover hinges are aligned with front body module openings.

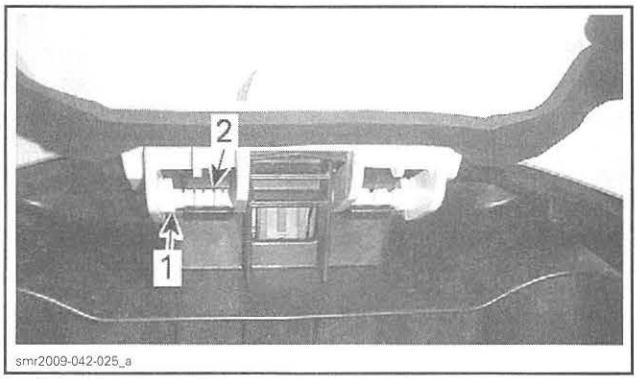

1. Glove box cover hinge
2. Front body module opening

3. Pull the bottom of cover gently to release hinges.

Glove Box Cover Installation

Reverse the removal procedure.

SEAT

Seat Removal

1. Open seat.
2. Attach the seat to support it during removal.
3. Remove Allen socket screw retaining the lateral arm to moving deck (one each side).

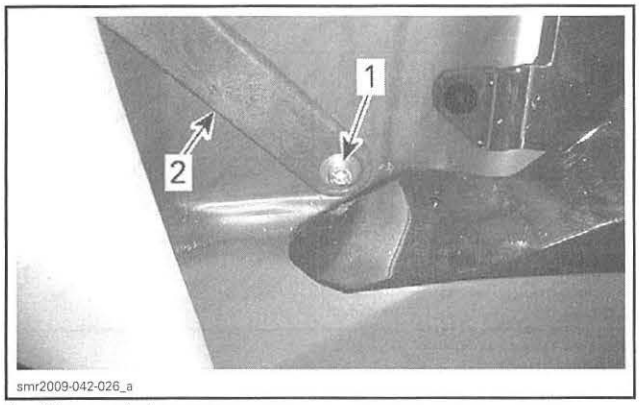

1. Allen socket screw
2. RH lateral arm

4. Remove bolts securing the central arm to seat.

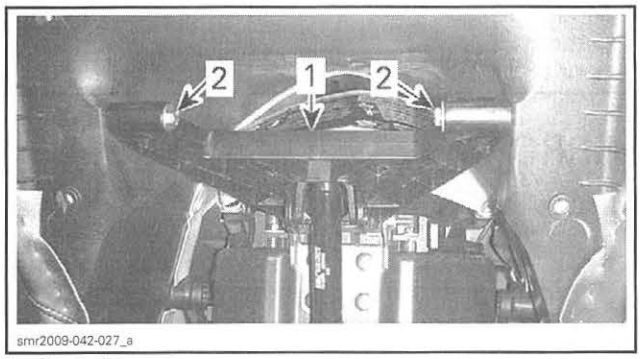

1. Central arm
2. Retaining bolts

5. Remove seat from vehicle.

Seat Installation

The installation is the reverse of the removal procedure. However, pay attention to the following.

Install seat to central arm.

Tighten seat retaining bolts to specification.

SEAT RETAINING BOLTS TORQUE
4 N•m (35 lbf•**in**)

Secure lateral arms to moving deck. Install parts as shown.

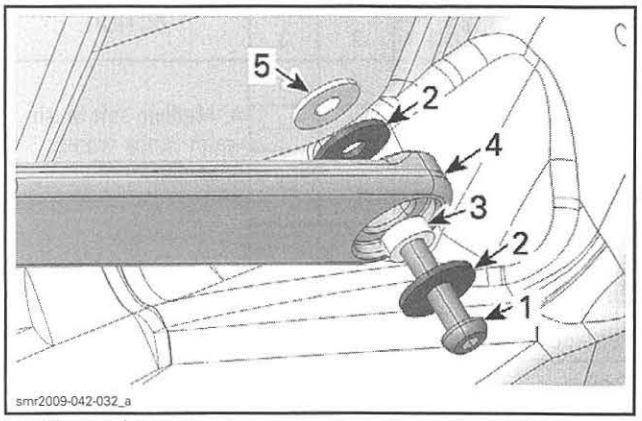

1. Allen socket screw
2. Stainless steel flat washers
3. Sleeve
4. RH lateral arm
5. Rubber grommet in moving deck

Tighten lateral arm screws to specification.

LATERAL ARM SCREWS TORQUE
1.5 N•m (13 lbf•**in**)

NOTICE **Do not tighten screws over this recommended torque. Otherwise, the rubber grommet could turns and screw will be hard to remove.**

Seat Cleaning

For general purpose cleaning, use XPS MULTI-PURPOSE CLEANER (P/N 219 701 709), Vinyl Finish Vinyl Cleaner, Fantastik or warm water with a mild dish soap such as Dawn or Ivory. Gently scrub with a small soft bristle brush.

For dirt build-up, use XPS MULTI-PURPOSE CLEANER (P/N 219 701 709), Vinyl Finish Vinyl Cleaner or an equivalent. Let soak for approximately 10 minutes, then gently scrub with a soft bristle brush. For specific stain removal, refer to your cleaning and care card.

Do not use any silicone-based protectants. They will extract the plasticizers, leaving the vinyl hard and brittle, and eventually cracking will occur.

RECOMMENDED PRODUCTS
1. XPS MULTI-PURPOSE CLEANER (P/N 219 701 709)
2. Dish Soap (Dawn or Ivory)
3. Fantastik
4. 3M Citrus Cleaner
5. 303 Protectant

Vinyl Cleaning Recommendations for Special Stains

TYPE OF STAIN	STEP 1	STEP 2	STEP 3	ACTION
Ballpoint ink*	E	B	A	A. Medium-soft brush, warm soapy water, rinse/dry.
Chewing gum	D	A	—	
Coffee, tea, chocolate	B	—	—	
Pen	D	B	—	
Grease	D	B	—	B. Vinyl Finish Cleaner, rinse/dry.
Household soil	A	B	—	
Ketchup	A	B	—	
Latex paint	A	B	—	C. One (1) tablespoon of ammonia, one-fourth (1/4) cup of hydrogen peroxide, three-fourth (3/4) cup of water, rinse/dry.
Lipstick	A	B	—	
Mildew or wet leaves*	C	B	A	
Motor oil	B	—	—	
Oil-based paint	D	B	—	
Permanent marker*	E	B	C	D. Wipe or scrape off excess (chill gum with ice before hand).
Spray paint	B	B	—	
Suntan lotion	A	B	—	
Tar/asphalt	D	B	—	E. Denatured alcohol, rinse/dry.
Yellow mustard	A	B	C	
*Suntan lotion, tree pollen, wet leaves and some other products can contain dyes that stain permanently.				

All cleaning methods must be followed by a thorough rinse with warm water.

Certain household cleaners, powdered abrasives, steel wool and industrial cleaners can cause damage and discoloration and are not recommended. Dry cleaning fluids and lacquer solvents should not be used as they will remove printed pattern and gloss. Waxes should be used with caution as many contain dyes or solvents that can permanently damage the protective coating.

SEAT LATCH

Seat Latch Adjustment

NOTE: Apply LOCTITE 243 (BLUE) (P/N 293 800 060) on threads of lock pin when the adjustment is required or when the lock pin is removed. If a new lock pin is used, it is already coat with a threadlocker.

1. Loosen adjustment nut.
2. Adjust lock pin height. Do not torque yet.
3. Position the lock pin longitudinally into the rear handle slot.
4. Hold the lock pin in this position and tighten adjustment nut to specification.

SEAT LATCH ADJUSTMENT NUT TORQUE
8 N•m (71 lbf•**in**)

5. Close the seat and readjust as required.

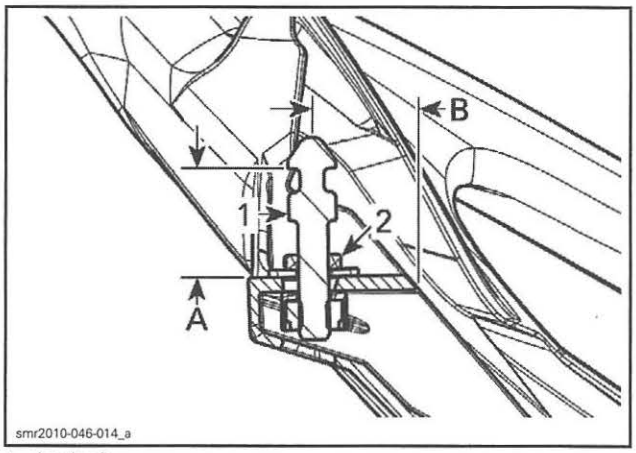

1. Lock pin
2. Adjustment nut

MODEL	MEASURE A	MEASURE B
iS and aS Models	32.4 mm ± 1.0 mm (1.276 in ± .039 in)	34.4 mm ± 1.0 mm (1.354 in ± .039 in)
Models without iS or aS	36.4 mm ± 1.0 mm (1.433 in ± .039 in)	

MIRRORS

Mirror Replacement

1. Remove mirror trim as follows.
   1.1 Using a small screwdriver, unlock both front tabs securing the front of mirror trim.
   1.2 Tilt the trim forward and remove it.

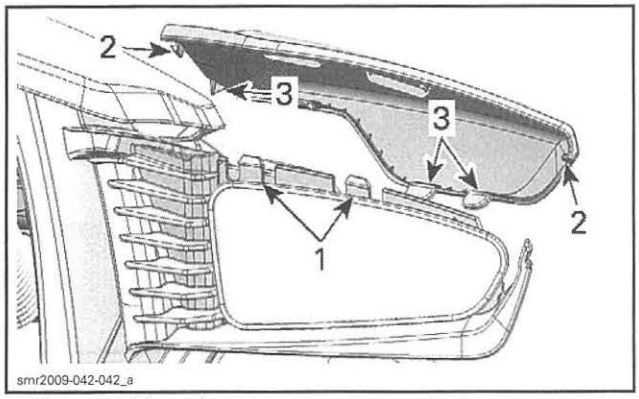

1. *Front retaining tabs*
2. *Side retaining tabs*
3. *Locating tabs*

2. Remove nut and spring securing mirror.

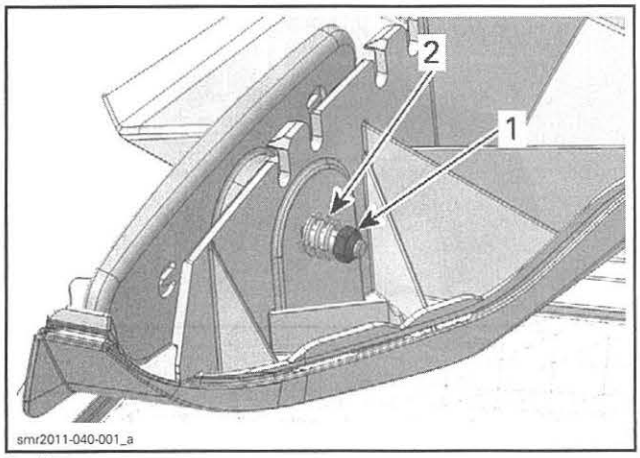

1. *Nut*
2. *Spring*

3. Install the new mirror and tighten nut to specification.

MIRROR SPRING LENGTH SPECIFICATION
10 mm to 12 mm (13/32 in to 15/32 in)

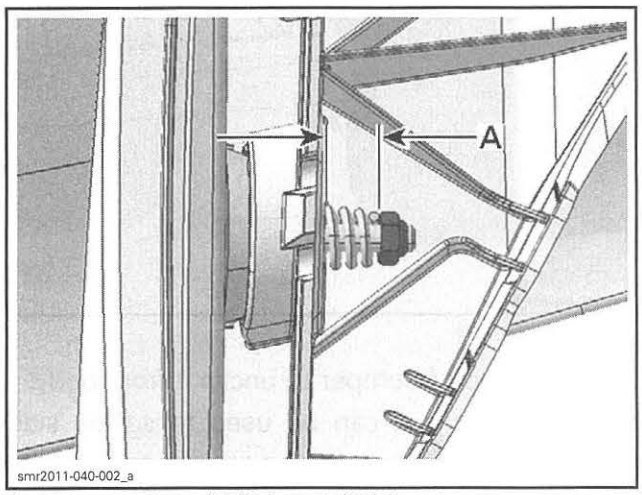

A. 10 mm to 12 mm (13/32 in to 15/32 in)

4. Install mirror trim as follows.
   4.1 Install the front locating tabs.

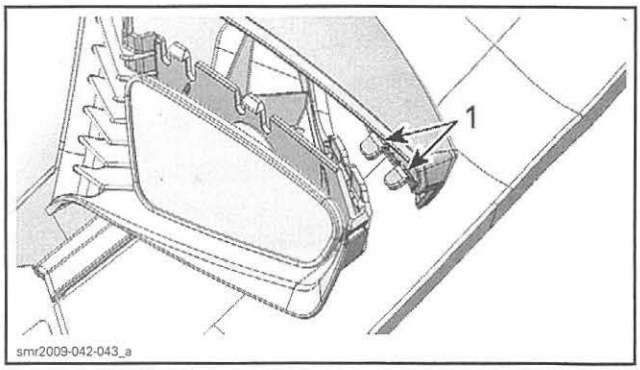

1. *Front locating tabs*

   4.2 Lower rear part of trim.
   4.3 Lift up the rear edge and press the center of trim to position retainers over front retaining tabs.

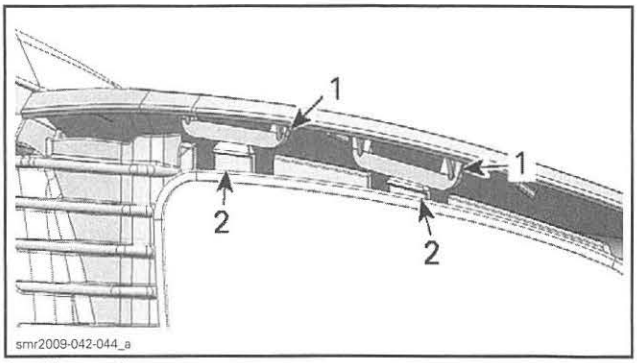

1. *Trim retainers*
2. *Retaining tabs*

BUMPERS

Bumper Removal

Front Bumper

1. Remove both protective caps.

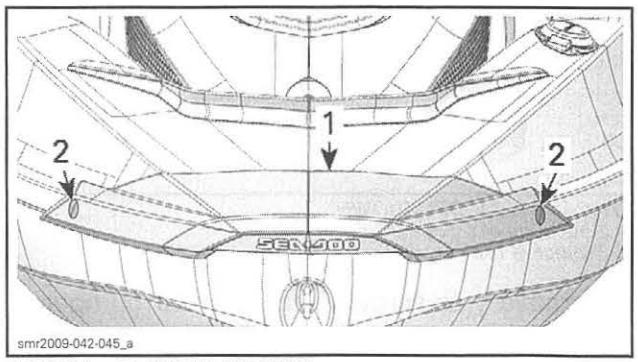

TYPICAL – iS MODEL SHOWN
1. *Front bumper*
2. *Protective caps*

2. Remove side screws securing front bumper to body.

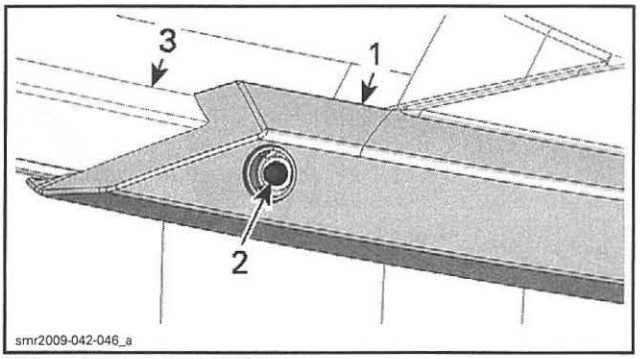

FROM RH SIDE OF VEHICLE
1. *Front bumper*
2. *Retaining screw*
3. *Side bumper*

3. Remove screws located under front bumper.

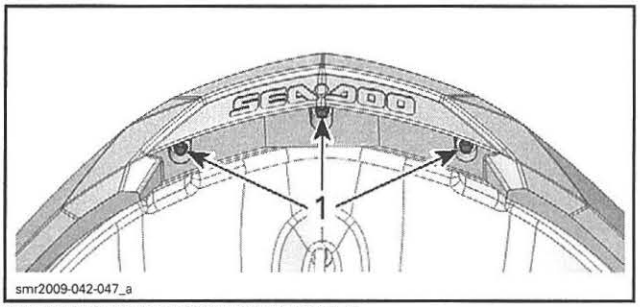

UNDERNEATH FRONT OF VEHICLE
1. *Retaining screws*

4. Remove front bumper from vehicle.

Rear Bumper

1. Remove both protective caps (one on each side).

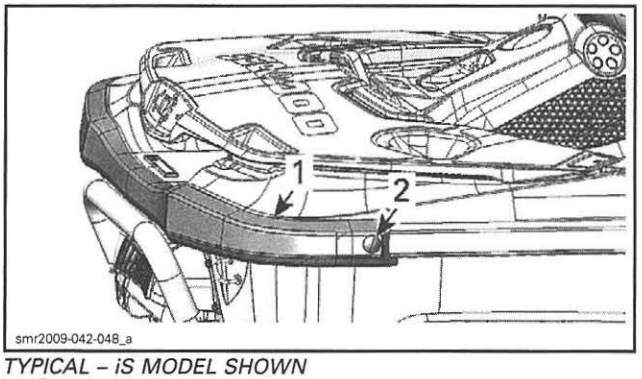

TYPICAL – iS MODEL SHOWN
1. *Rear bumper*
2. *Protective cap*

2. Remove side screws securing rear bumper to body.

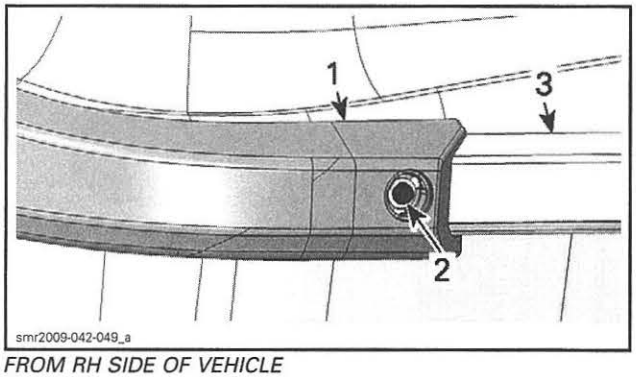

FROM RH SIDE OF VEHICLE
1. *Rear bumper*
2. *Retaining screw*
3. *Side bumper*

3. Remove screws located under rear bumper.

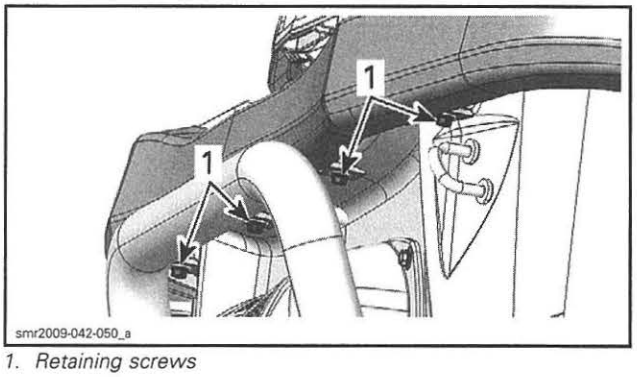

1. *Retaining screws*

4. Remove rear bumper from vehicle.

Side Bumpers

1. Remove front and rear bumpers.
2. Using a marker, trace a line at bumper end.

NOTE: These marks will be used during installation.

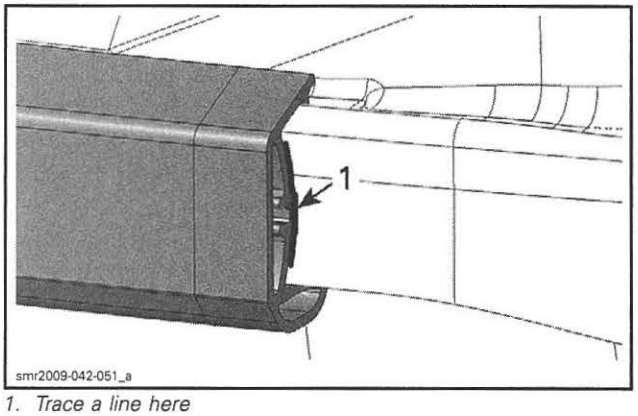

1. *Trace a line here*

3. Pull the top of bumper to unclip it from body.

NOTE: A heat gun can be used to soften side bumper.

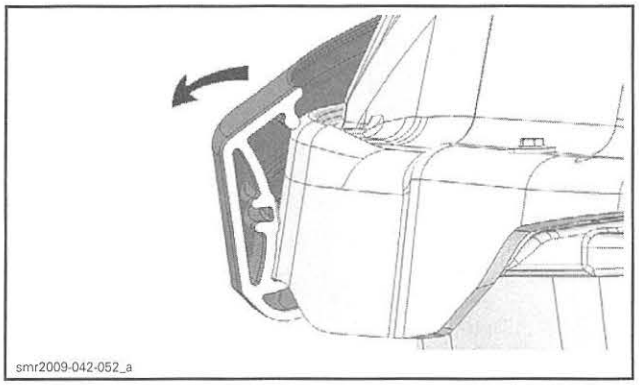

Bumper Installation

Front and Rear Bumper

The installation is the reverse of the removal procedure.

Tighten bumper screws to specification.

BUMPER SCREWS TORQUE
5 N•m (44 lbf•**in**)

Side Bumpers

1. Remove all remaining residues of the mounting tape.
2. Clean bumper area using isopropyl alcohol.
3. Remove the protective skin on mounting tape.

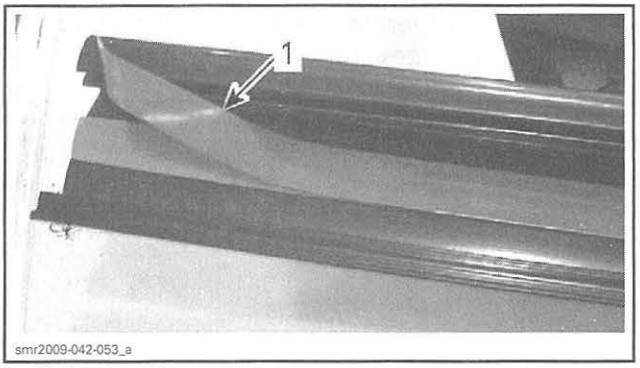

1. Protective skin

4. Insert bumper over body lip.
   4.1 Insert lower section first.
   4.2 Insert upper section last.

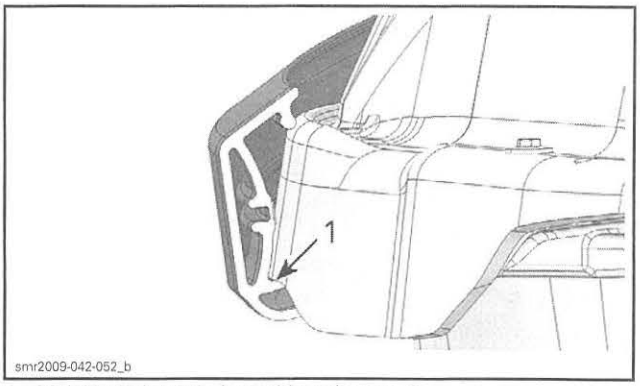

1. Make sure bumper is positioned correctly

NOTE: A heat gun can be used to soften side bumper.

BODY COVER

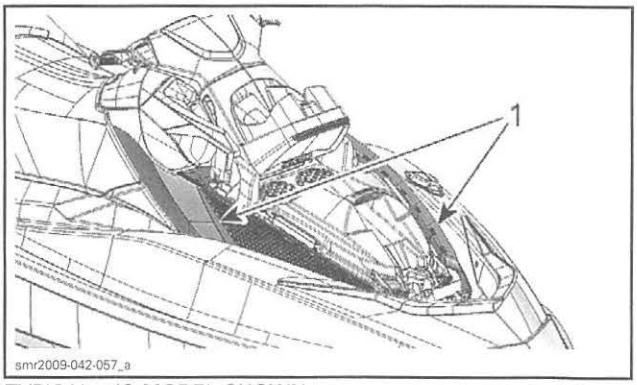

TYPICAL – iS MODEL SHOWN
1. Body covers

Body Cover Removal

1. Remove the *STORAGE COMPARTMENT COVER*, see procedure in this subsection.
2. Remove the *FRONT GRILLE*, see procedure in this subsection.
3. Remove the plastic push-in clip securing the upper trim.

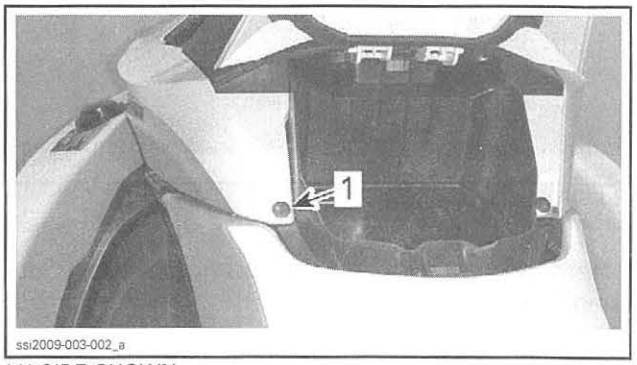

LH SIDE SHOWN
1. Remove this plastic push-in clip

4. Move both upper trims rearward and remove them.

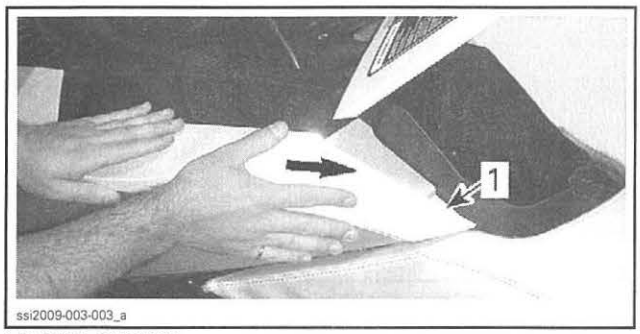

LH SIDE SHOWN
1. LH upper trim

5. Remove the plastic push-in clips retaining the LH and RH trims.

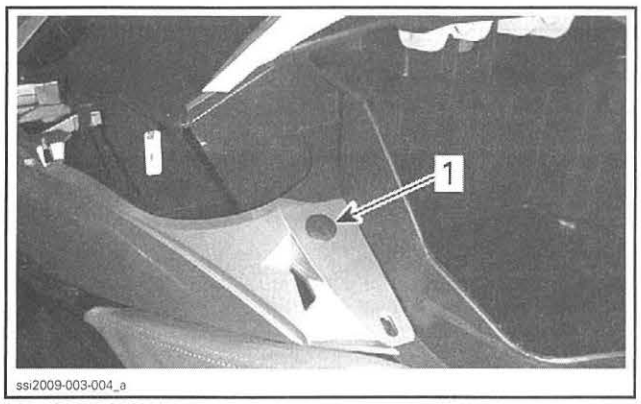

LH SIDE SHOWN
1. Remove this plastic push-in clip

6. Open seat and using a 3/16" drill bit, drill the rivets securing the seat trims.

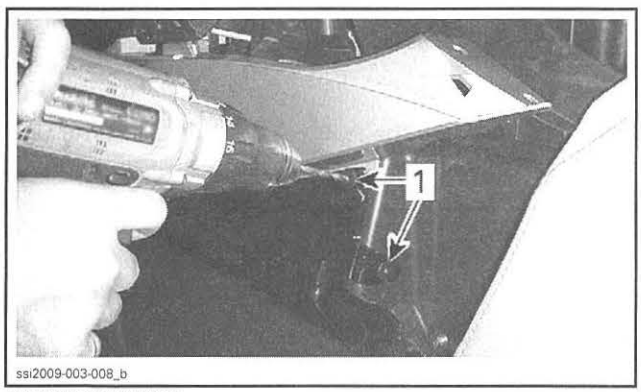

LH SIDE SHOWN
1. Remove these rivets

7. Remove seat trim and drill the front rivet securing the body cover.
8. At the front of front body module, remove screws or rivets retaining both body cover.
9. Unlock rear and center retaining tabs.

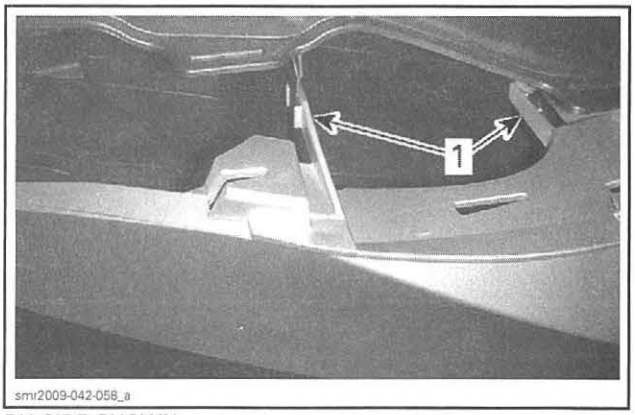

RH SIDE SHOWN
1. Rear retaining tabs

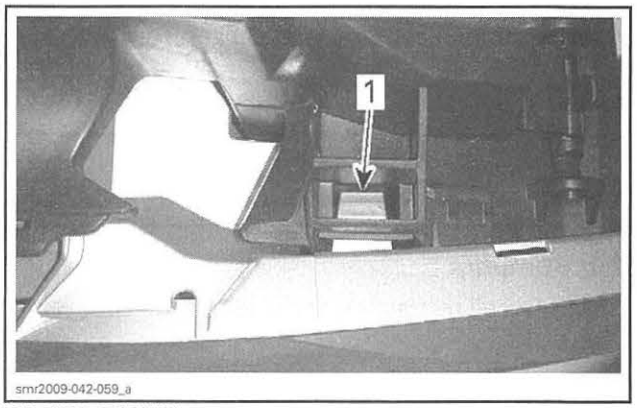

RH SIDE SHOWN
1. Center retaining tab

10. Unlock the four retaining tabs securing the front of body cover.

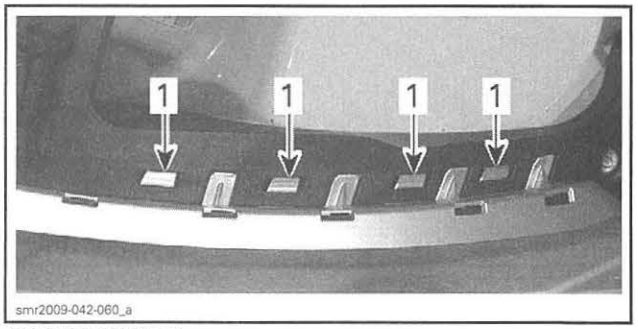

RH SIDE SHOWN
1. Front retaining tab

11. Remove body covers.

Body Cover Installation

The installation is the reverse of the removal procedure.

FRONT BODY MODULE

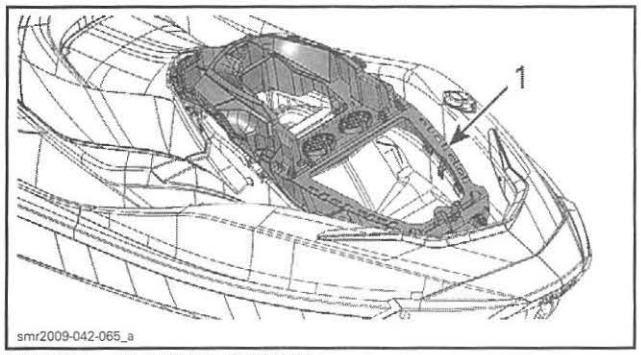

TYPICAL – iS MODEL SHOWN
1. Front body module

Front Body Module Removal

1. Refer to appropriate procedures and remove the following parts:
   - Storage compartment cover
   - Storage bin
   - Glove box cover
   - Body covers and front grille
   - Steering and steering lock
   - Speed-Tie unit (if equipped).
2. Remove both screws and washers located between seat and glove box.

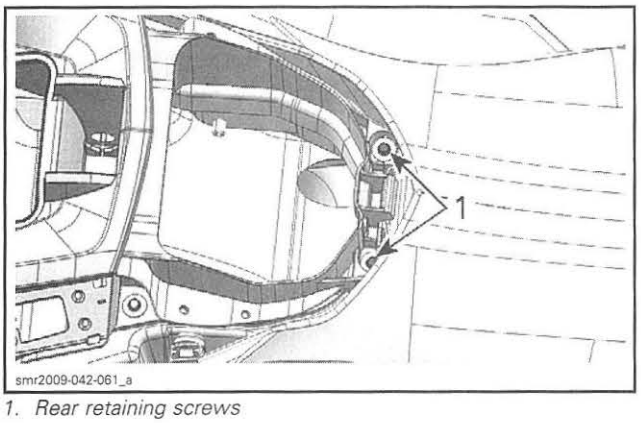

1. Rear retaining screws

3. On each side of front body module, remove both retaining screws.

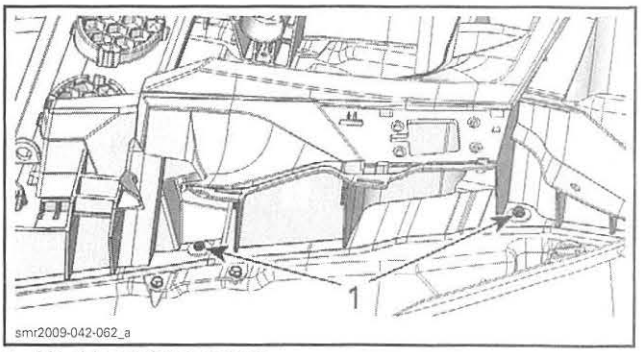

1. LH side retaining screws

4. At the front of body module, remove screws.

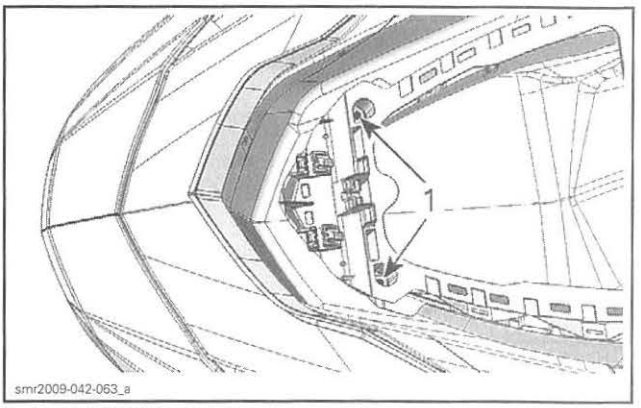

1. Front retaining screws

5. Unlock retaining tabs.

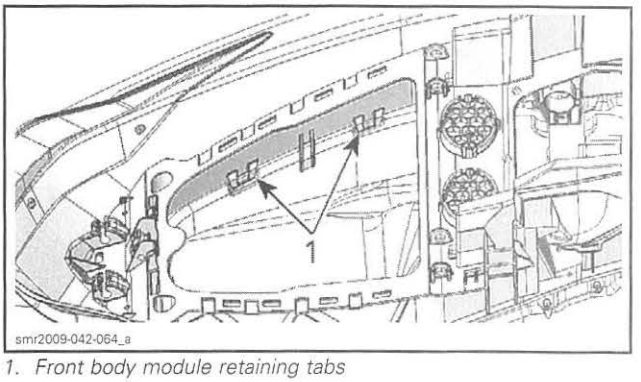

1. Front body module retaining tabs

6. Remove front body module.

Front Body Module Installation

The installation is the reverse of the removal procedure.

SPEED-TIE UNIT

Front Speed-Tie Unit Removal

1. Open the glove box.
2. Remove the plastic push-in clip securing the LH upper trim.

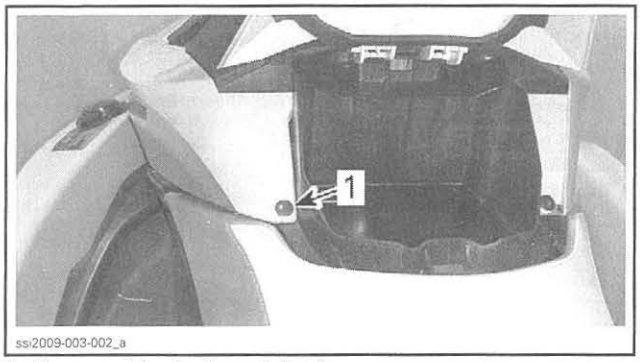

1. Remove this plastic push-in clip

3. Move upper trim rearward and remove it.

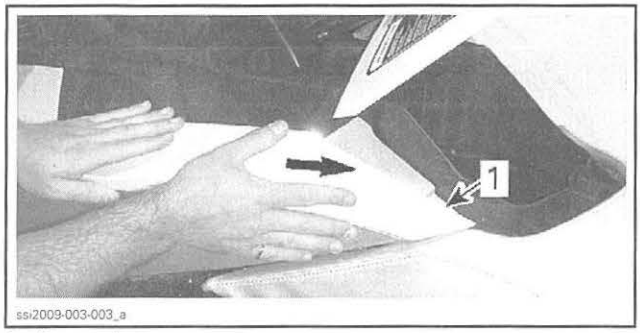

1. Upper trim

4. Remove the plastic push-in clip retaining the LH trim.

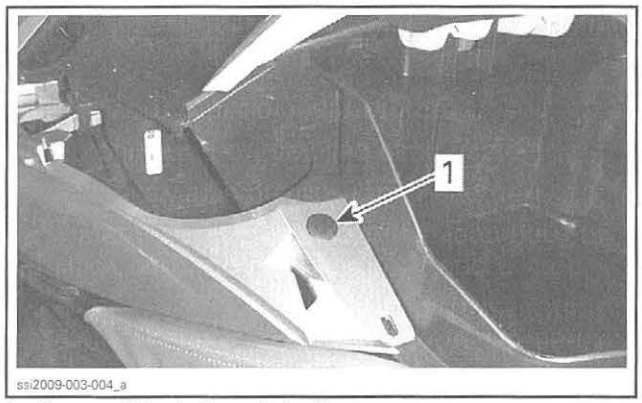

1. Remove this plastic push-in clip

5. Open seat.
6. Drill rivet securing the LH body cover and the seat trim.

REQUIRED TOOL
SUPERTANIUM DRILL BIT 3/16" (P/N 529 031 800)

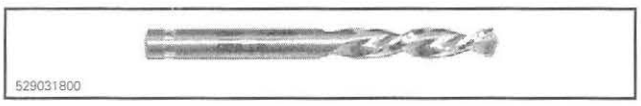

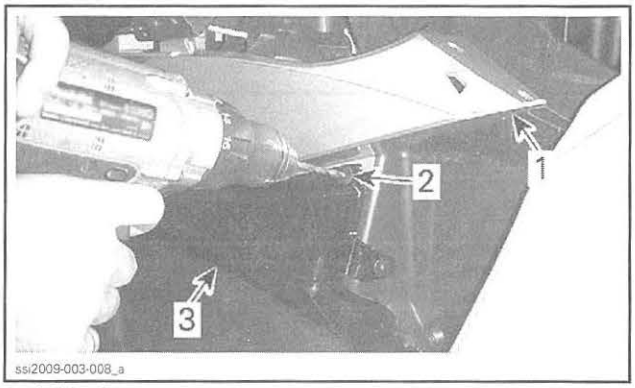

1. LH body cover
2. Remove this rivet
3. Seat trim

7. Remove front trim by releasing both retaining tabs.

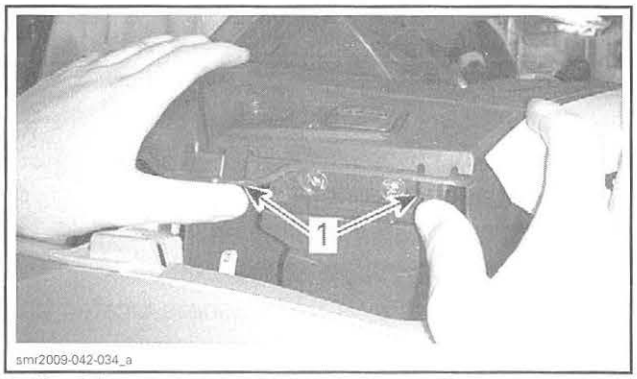

1. Retaining tabs

8. Using a small screwdriver, release both retaining hooks securing the cam trim on locking mechanism.

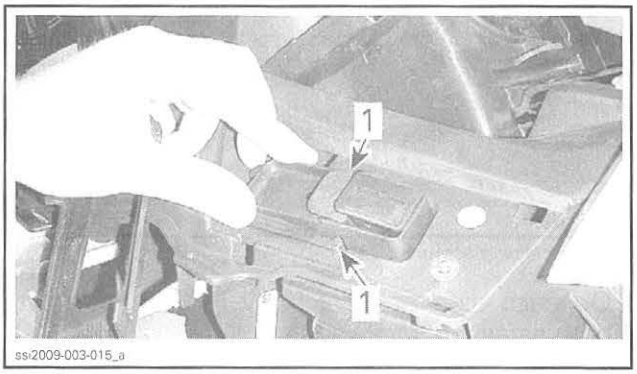

1. Retaining hooks

9. Remove screws retaining the Speed-Tie unit.
10. Position the reel of Speed-Tie unit to the bottom of its cavity.
11. Remove the locking mechanism from vehicle.
12. Open storage cover and unlock the front tab securing the LH trim.

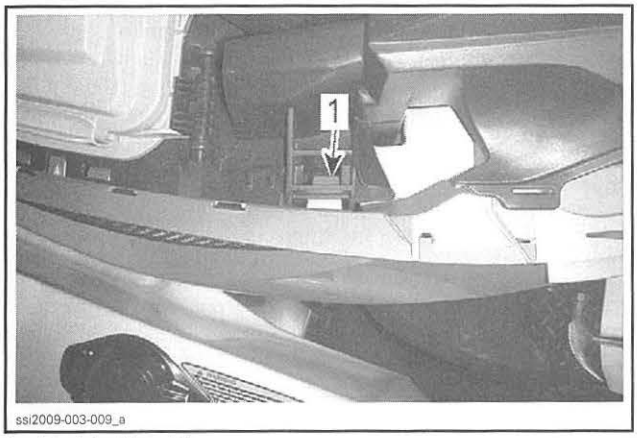

1. Front locking tab

13. Unlatch the rear tab.

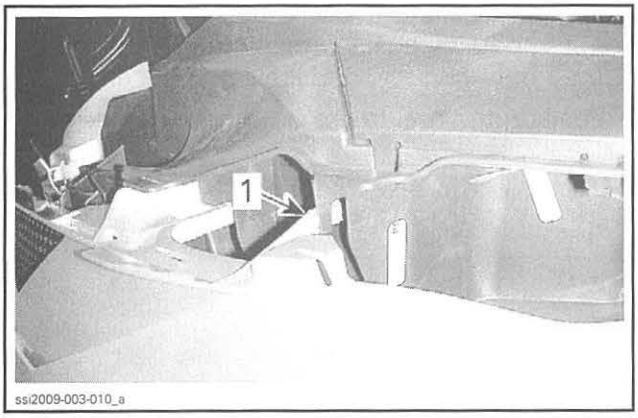

1. Rear locking tab

14. Slightly pull the top of LH trim and remove the reel of the Speed-Tie unit from its location as shown.

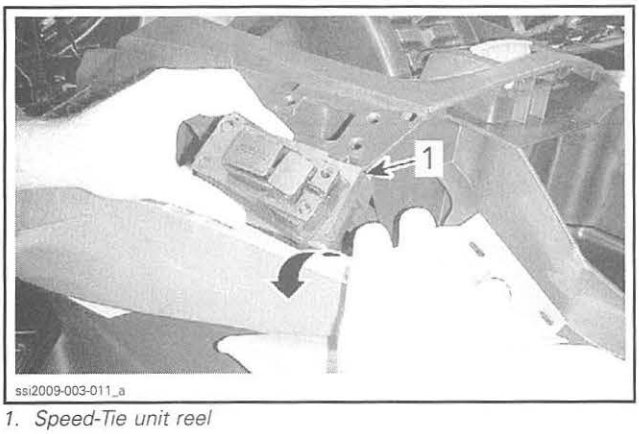

1. Speed-Tie unit reel

NOTICE During Speed-Tie unit removal, be careful not to damage the LH trim.

Rear Speed-Tie Unit Removal

iS and aS Models

1. Remove screws securing the Speed-Tie unit to the boarding platform.
2. Remove rear trim by releasing retaining tabs.

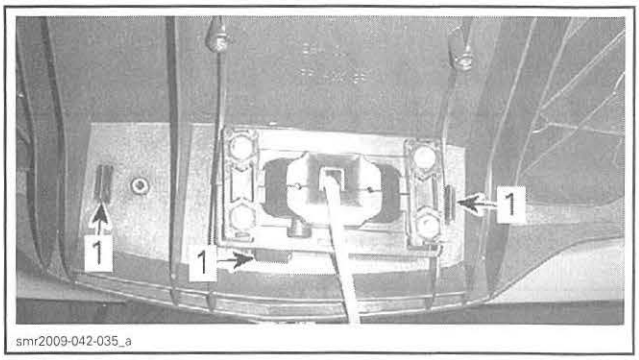

1. Retaining tabs

3. Remove screws securing the locking mechanism to the boarding platform.

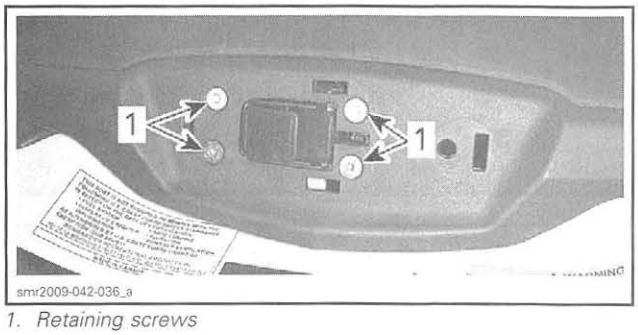

1. Retaining screws

4. Remove the Speed-Tie unit from vehicle.

Models Without iS or aS

1. Remove both access covers.
2. From underneath deck, remove screws retaining the Speed-Tie cover.
3. Remove bolts securing the Speed-Tie unit to deck.

Front Speed-Tie Unit Installation

1. Ensure both double cage nuts are correctly inserted into Speed-Tie unit cavities.

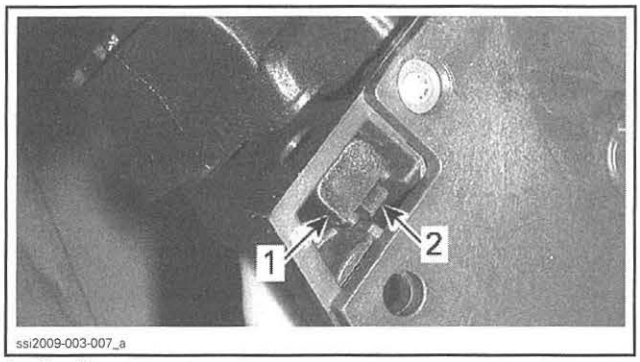

1. *Double cage nut*
2. *Positioning tab*

2. Insert the Speed-Tie unit in vehicle.

2.1 Unlock the front tab securing the LH trim.

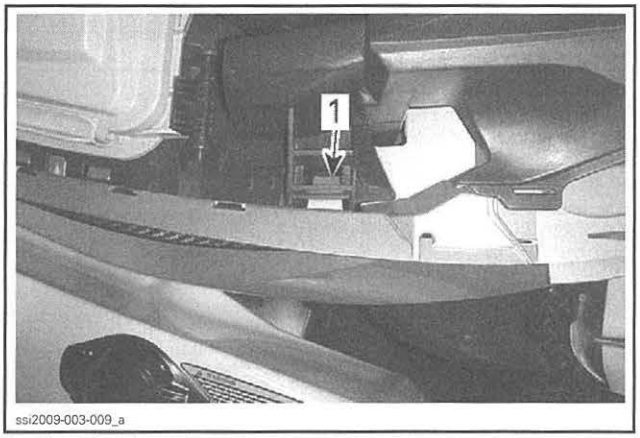

1. *Front locking tab*

2.2 Unlatch the rear tab.

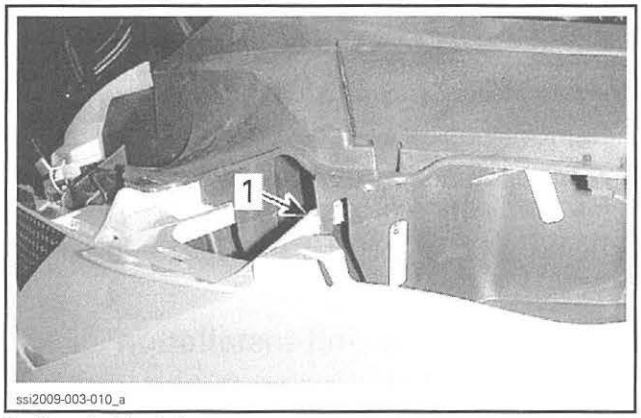

1. *Rear locking tab*

2.3 Slightly pull the top of LH trim and insert the reel of the Speed-Tie unit in its location as shown.

NOTE: Insert the unit with the marking outside.

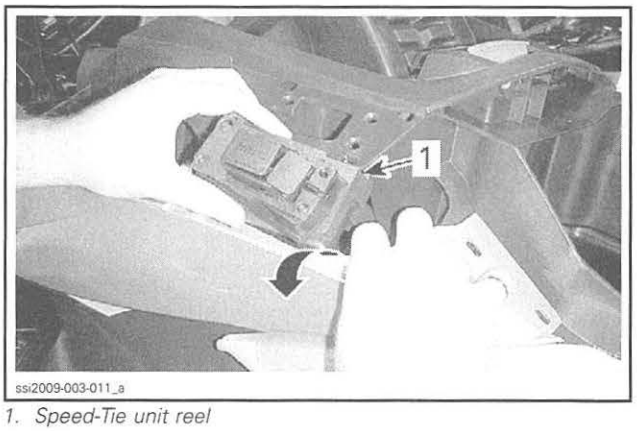

1. *Speed-Tie unit reel*

NOTICE **During Speed-Tie unit insertion, be careful not to damage the LH trim.**

NOTE: To facilitate the locking mechanism insertion, temporarily pull approximately 200 mm (8 in) of rope between reel and locking mechanism.

3. Position the reel to the bottom of its cavity.

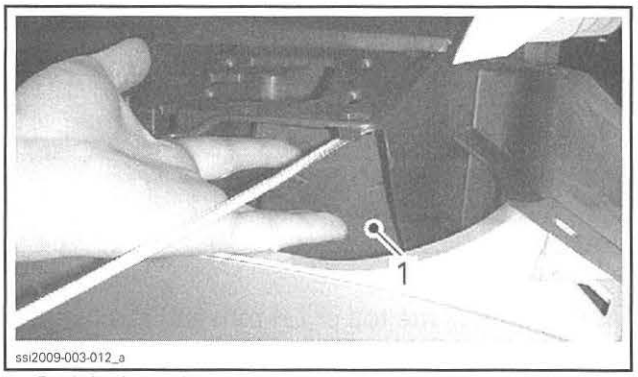

1. *Push in the reel*

4. Lift the lever and insert the locking mechanism so that the lever is pointing toward the front of vehicle.

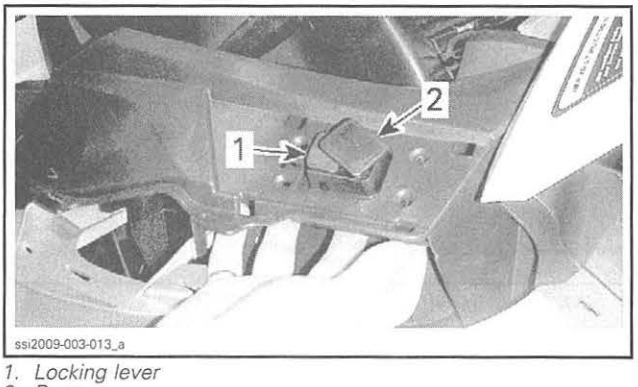

1. *Locking lever*
2. *Rope*

5. Align the reel with the locking mechanism.
6. Tighten locking mechanism retaining screws to specification.

LOCKING MECHANISM RETAINING SCREWS TORQUE
4 N•m (35 lbf•**in**)

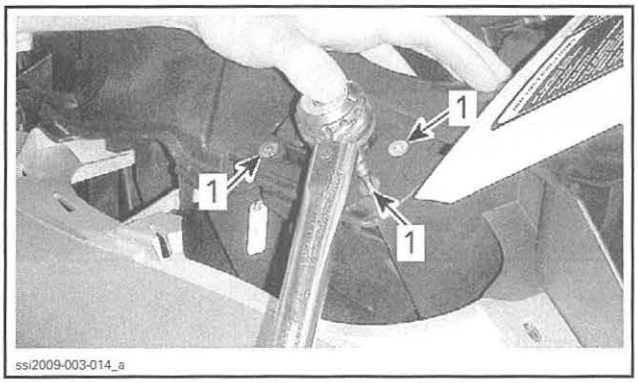

ssi2009-003-014_a

1. Locking mechanism retaining screws (M6 x 45)

7. Install the cam trim.
   7.1 Insert both cam trim retaining hooks into locking mechanism openings.

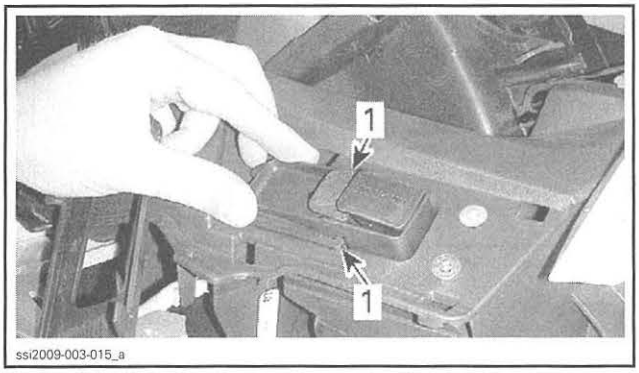

ssi2009-003-015_a

1. Retaining hooks

   7.2 Press down the cam trim until it snaps into place.
8. Install the front trim.
   8.1 Insert top tabs and align lower tabs with openings.

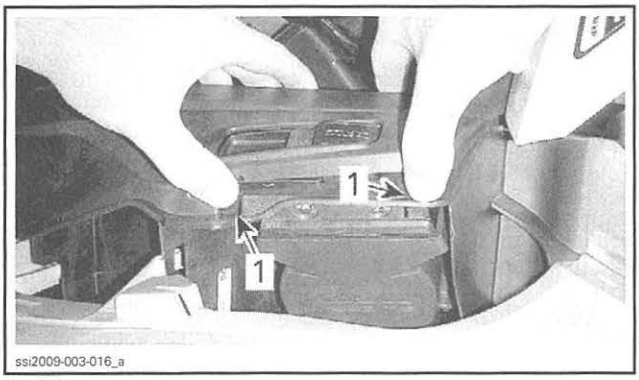

ssi2009-003-016_a

1. Tabs

   8.2 Press trim in place.
9. Test Speed-Tie operation.
10. Reinstall all removed parts.

Rear Speed-Tie Unit Installation

iS and aS Models

1. Lift up the boarding platform.

NOTE: To facilitate the locking mechanism insertion, temporarily pull approximately 200 mm (8 in) of rope.

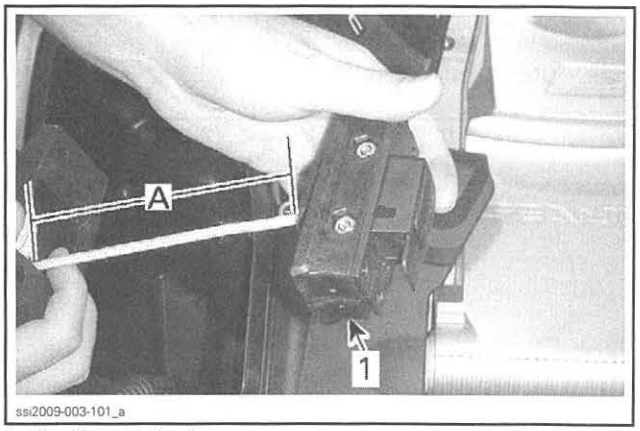

ssi2009-003-101_a

1. Locking mechanism
A. 200 mm (8 in)

2. Insert the locking mechanism in boarding platform opening. Position the locking lever toward the slot.

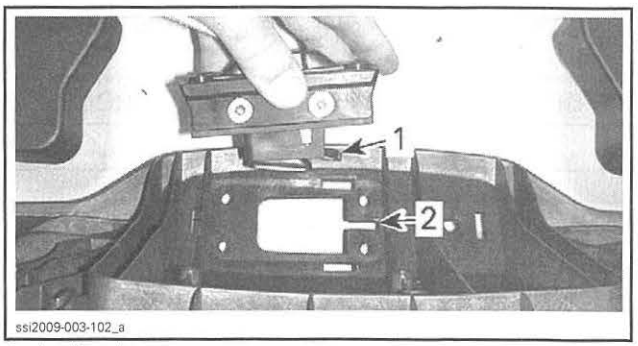

ssi2009-003-102_a

1. Locking lever
2. Boarding platform slot

3. Position a double cage nut on the locking mechanism.

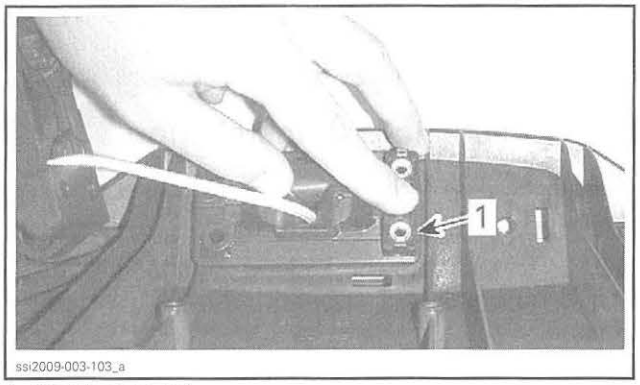

1. Double cage nut

4. Secure it using retaining screws.

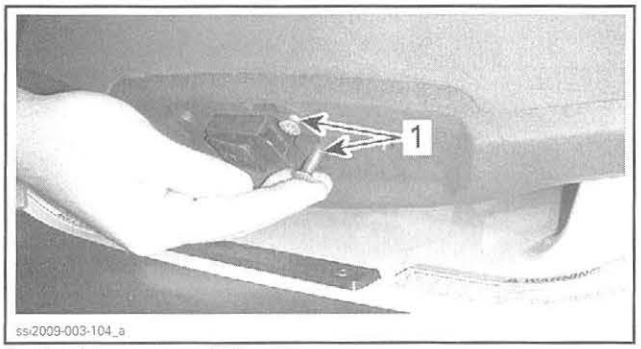

1. Retaining screws (M6 x 45)

5. Install the second double cage nut.
6. Secure the reel of the Speed-Tie unit on boarding platform.
7. Tighten Speed-Tie retaining screws to specification.

SPEED-TIE RETAINING SCREWS TORQUE
5 N•m (44 lbf•**in**)

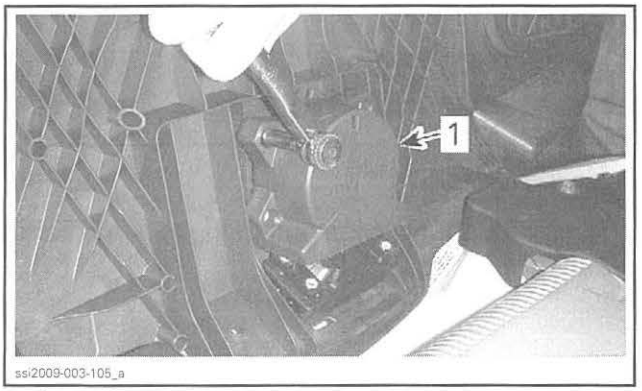

1. Speed-Tie unit

8. Close boarding platform.
9. Tighten locking mechanism retaining screws to specification.

LOCKING MECHANISM SCREWS TORQUE
2.5 N•m (22 lbf•**in**)

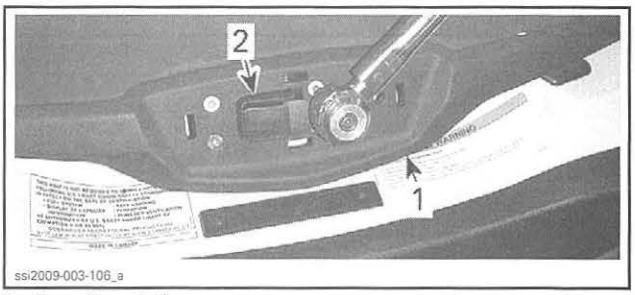

1. Boarding platform
2. Locking mechanism

10. Install the cam trim.
    10.1 Insert both cam trim retaining hooks into locking mechanism openings.

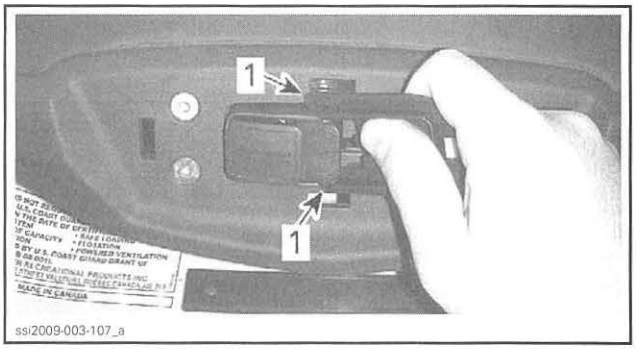

1. Retaining hooks

    10.2 Press down the cam trim against boarding platform.
11. Install the rear trim.
    11.1 Align tabs and alignment pin with corresponding openings.

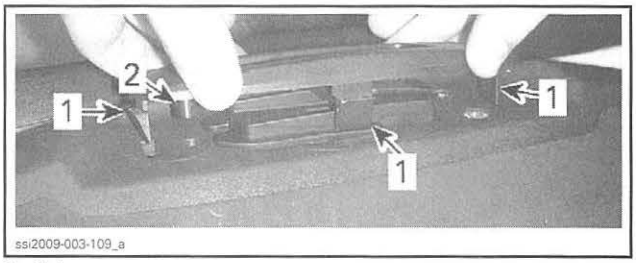

1. Tabs
2. Alignment pin

    11.2 Press trim in place.
12. Test Speed-Tie operation.

Models Without iS or aS

1. Clean all residues of silicone from deck and Speed-Tie cover.

2. Apply LOCTITE 5150 (SILICONE SEALANT) (P/N 296 000 309) in the Speed-Tie unit holes.

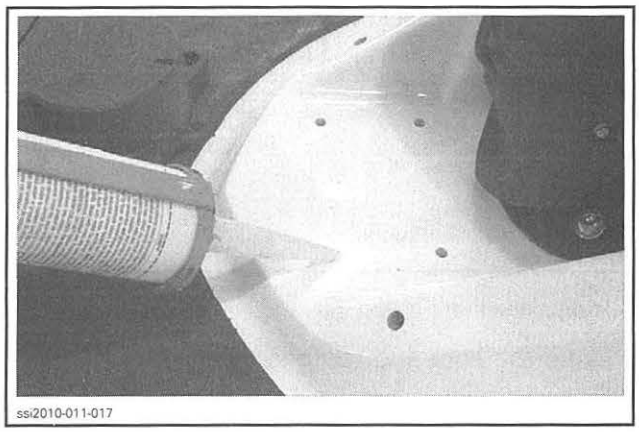

3. Align Speed-Tie unit holes with body holes.
4. Secure the Speed-Tie unit.

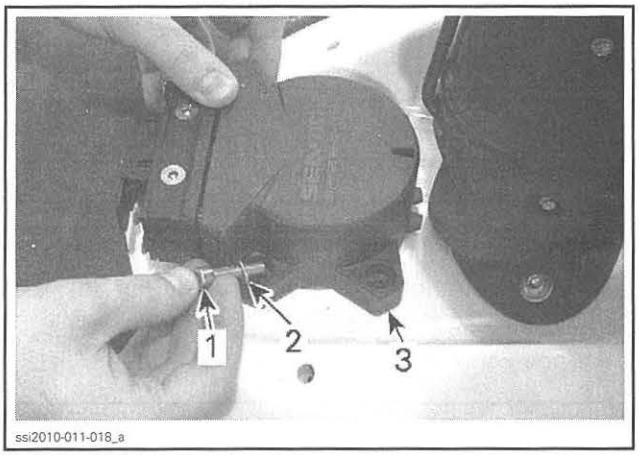

1. M6 x 30 Allen socket screw
2. M6 flat washers
3. Speed-Tie unit

5. Tighten Speed-Tie unit retaining screws to specification.

SPEED-TIE UNIT RETAINING SCREWS TORQUE
8 N•m (71 lbf•**in**)

6. Pull the locking lever to allow cover installation.

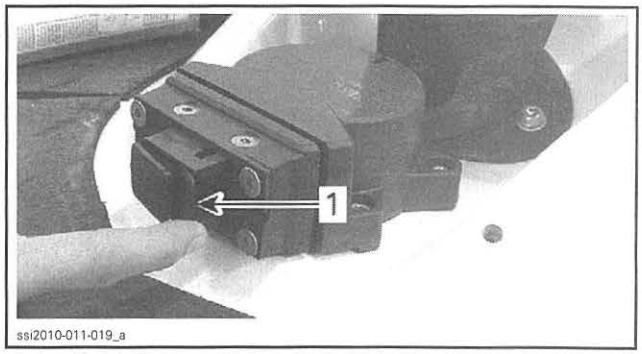

1. Locking lever

7. To facilitate new cover installation and avoid cross threading, install both Plastite screws in cover posts (approximately 3-4 turns). Then, remove screws.

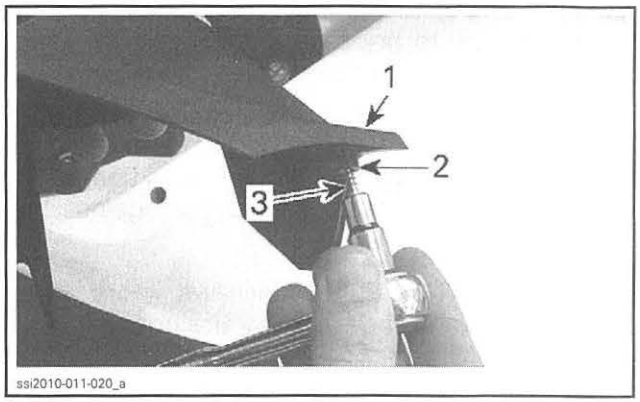

1. Cover
2. Cover posts
3. Plastite screws K40 x 13

8. Apply LOCTITE 5150 (SILICONE SEALANT) (P/N 296 000 309) all around both cover holes.

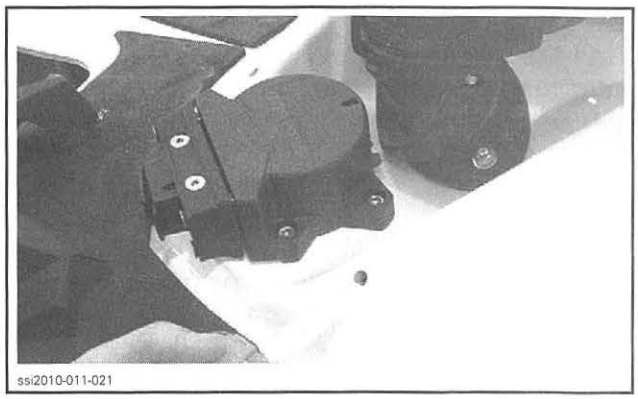

9. Install the cover.
   9.1 Insert cover opening over the mooring rope stopper and the locking lever.

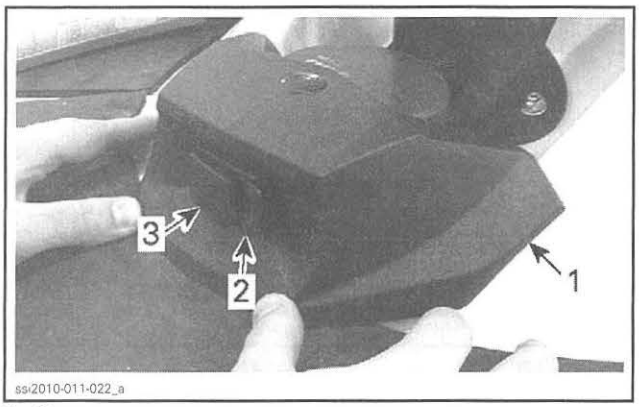

1. *Cover*
2. *Locking lever*
3. *Mooring rope stopper*

9.2 Insert cover posts into cover holes.

NOTE: Due to the drilling precision, it may be necessary to pry slightly the cover to insert cover posts into cover holes.

9.3 From underneath deck, secure the cover with Plastite screws and flat washers. To avoid damaging the cover, stop tightening as soon as the washers are against the deck.

NOTICE **Do not tighten screws more than necessary to avoid damaging the cover.**

10. Test Speed-Tie operation.
11. Reinstall access covers.

Speed-Tie Unit Cleaning

A minimum of maintenance is required to keep the Speed-Tie unit and the rope in serviceable condition.

Clean the locking mechanism and rope with fresh water to remove salt, sand or other deposits.

NOTICE **Do not use a high pressure washer to clean the Speed-Tie unit.**

Let dry.

Speed-Tie Rope Replacement

1. Remove the Speed-Tie unit from the vehicle.
2. Using a small tool, remove the rope cap.

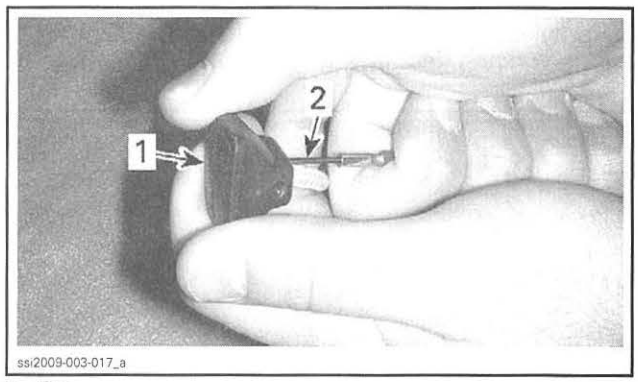

1. *Cap*
2. *Small screwdriver*

3. Untie the knot and remove the button.

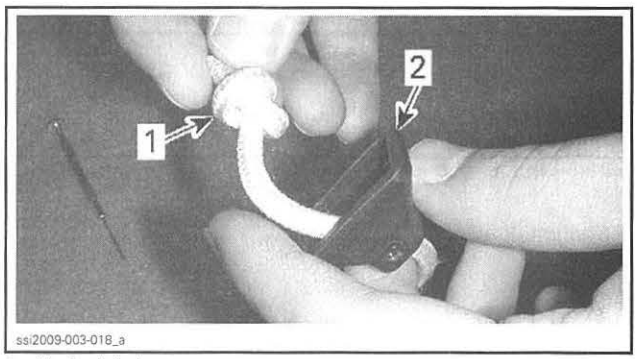

1. *Untie this knot*
2. *Button*

4. Remove the locking mechanism and let the rope retracts into housing.
5. Remove the back cover.

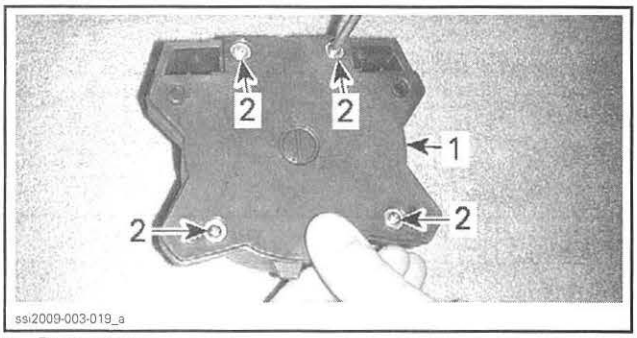

1. *Back cover*
2. *Retaining screws*

6. Remove the rewind unit.

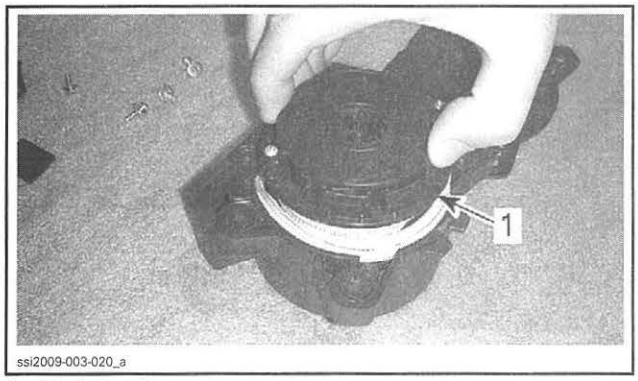

1. Rewind unit

7. Turn the unit upside down and remove the retaining screw.

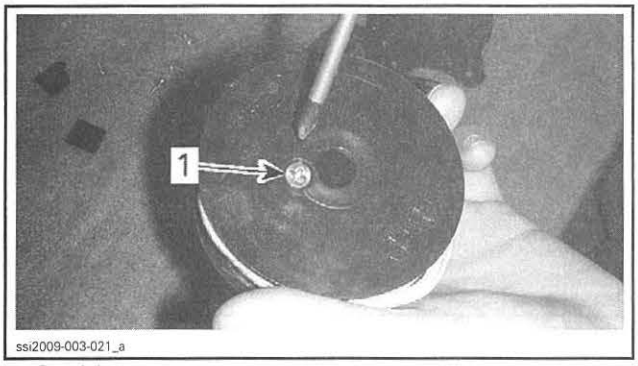

1. Retaining screw

8. Split the rewind unit and remove damaged rope.

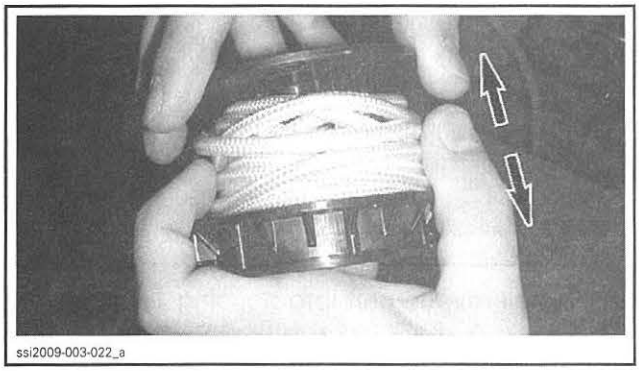

9. Before discarding rope, remove and keep the inner stopper.

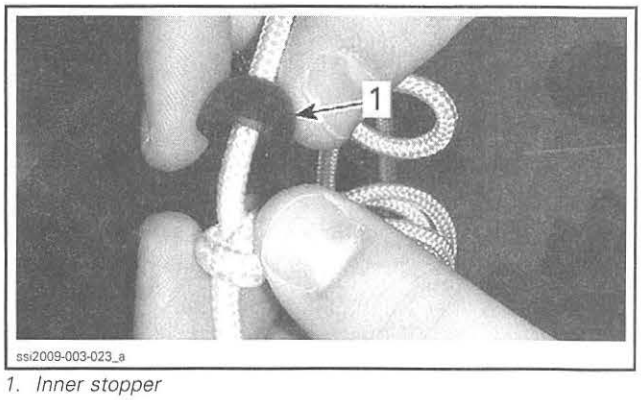

1. Inner stopper

10. Insert the inner stopper on new rope and tie a knot near the end of the line. Position the inner stopper in order to its flat side leans against the knot.

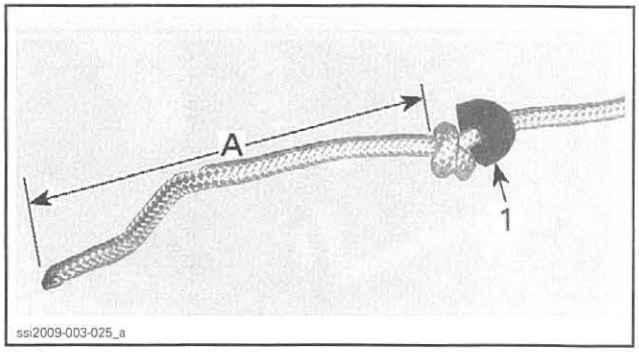

1. Inner stopper
A. 106 mm ± 6 mm (4-1/8 in ± 15/64 in)

11. On rewind unit base, identify the short tongue.

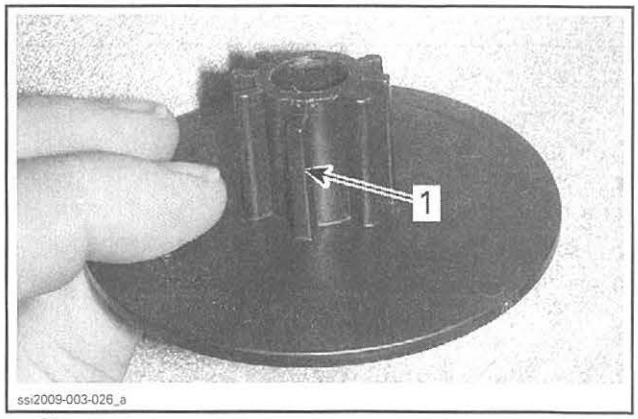

1. Short tongue

12. Install the rope end (with the knot) over the short tongue as shown.

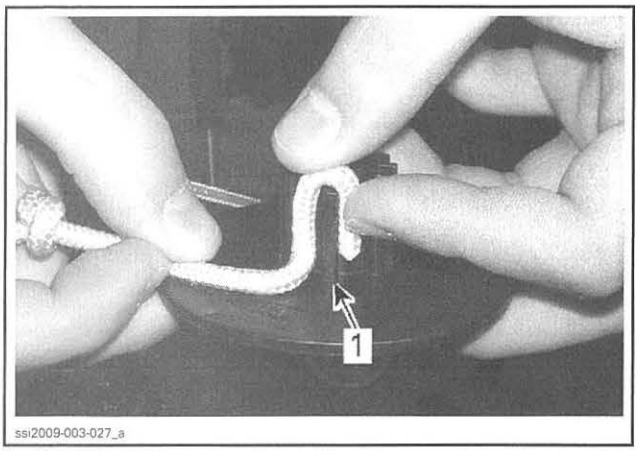

ssi2009-003-027_a

1. Short tongue

13. Install the rewind unit cover.

13.1 Align the cover notch and the rope.

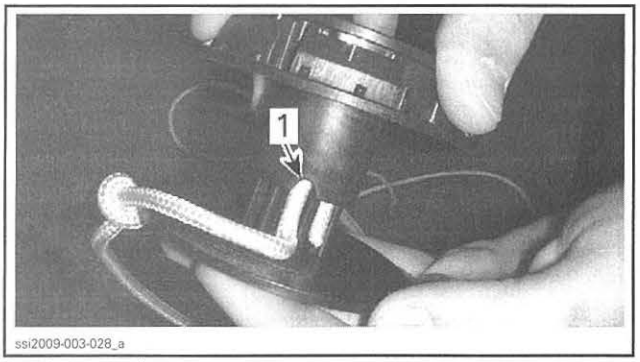

ssi2009-003-028_a

1. Cover notch

13.2 Press in the cover until both parts are completely pressed together.

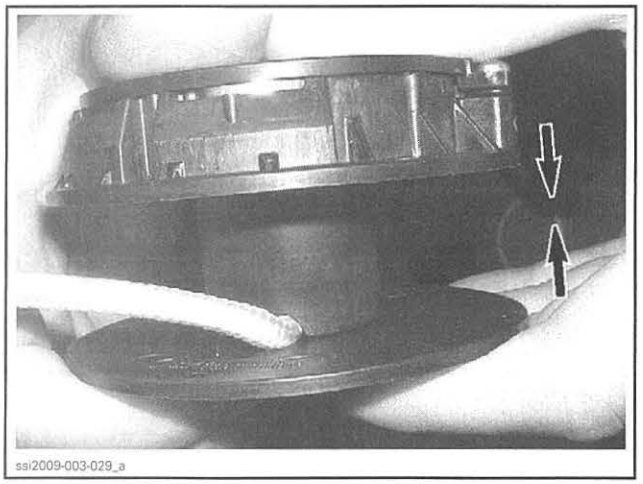
ssi2009-003-029_a

13.3 Install and tighten retaining screw to specification.

REWIND UNIT COVER RETAINING SCREW TORQUE
1 N•m (9 lbf•**in**)

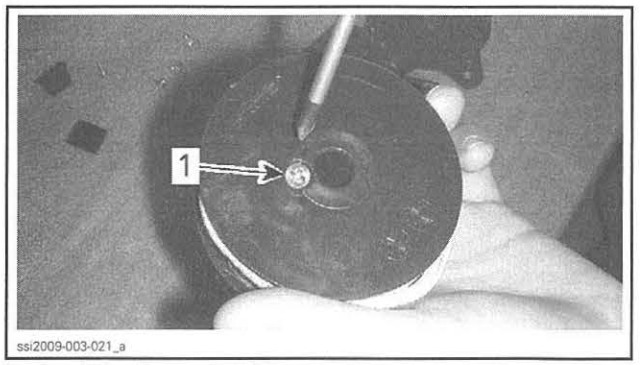

ssi2009-003-021_a

1. Rewind unit cover retaining screw

14. Turn rope clockwise. Check indications on inner side of rewind unit.

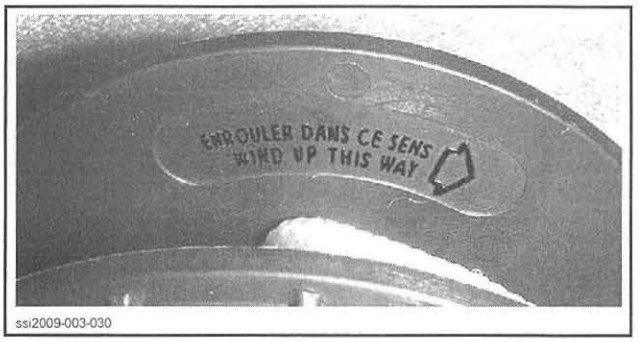

ssi2009-003-030

15. Lock the end of rope as shown.

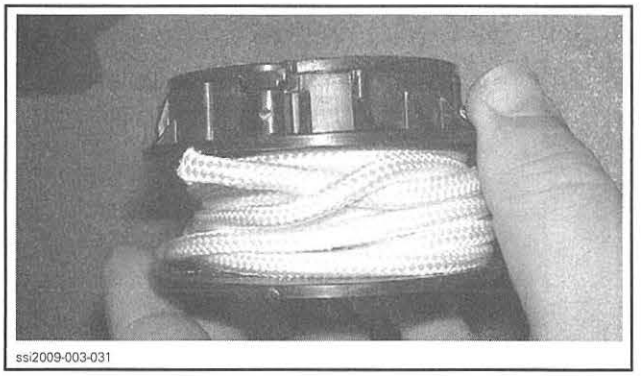
ssi2009-003-031

16. Install rewind unit into housing.

16.1 Install the rewind unit with the retaining screw downward. The end of rope must be placed in front of the housing opening.

16.2 Insert spring in shaft notch.

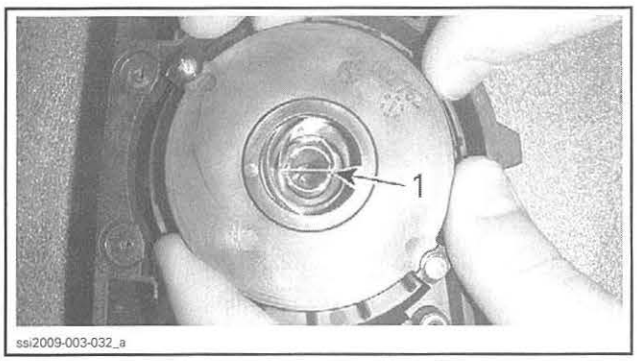

1. Spring in notch

NOTE: Ensure spring is properly inserted in notch.

17. Using a screwdriver, crank rewind spring exactly 7 turns (clockwise).

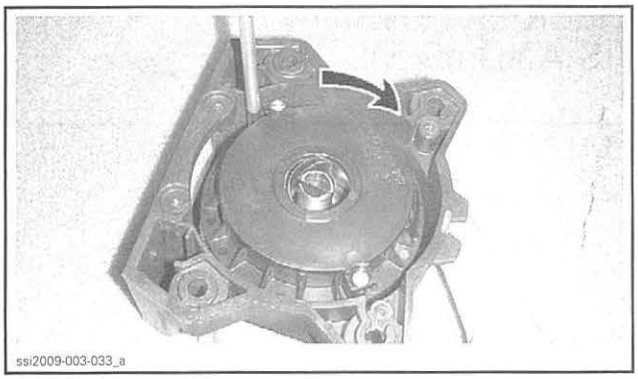

18. Unlock the end of the rope and pull it out by the housing opening.

NOTE: Be careful not to release the rope and the spring. Otherwise you will need to remove drum and repeat the cranking operation.

19. Install locking mechanism and rope.

19.1 Pull out rope end.

19.2 Insert end of rope through locking mechanism.

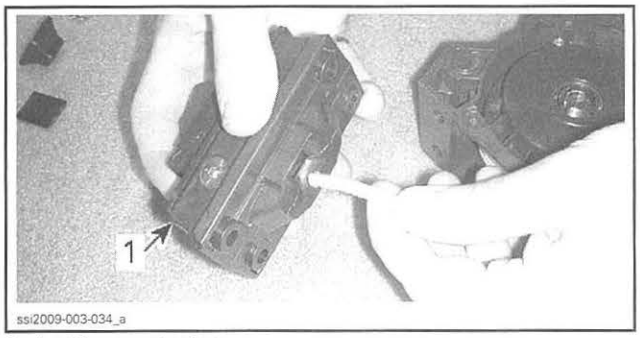

1. Locking mechanism

19.3 Pass rope end through the rope button and tie a knot on the rope end, see picture.

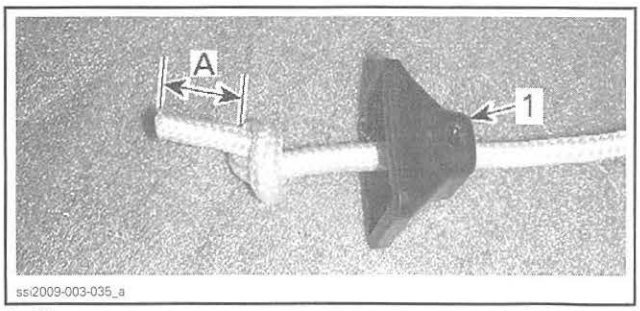

1. Rope
A. 18 mm ± 6 mm (23/32 in ± 15/64 in)

19.4 Pull knot in the button and install the button cap. Make sure cap is properly snapped.

20. Install and tighten Speed-Tie cover retaining screws to specification.

SPEED-TIE COVER RETAINING SCREWS TORQUE
1 N•m (9 lbf•**in**)

21. Check Speed-Tie operation.

22. Reinstall the Speed-Tie unit on vehicle.

BOARDING PLATFORM (iS AND aS MODELS)

Boarding Platform Removal

1. Unlatch the boarding platform.
2. Open boarding platform completely.
3. Cut locking tie retaining the bellows of gas shock.

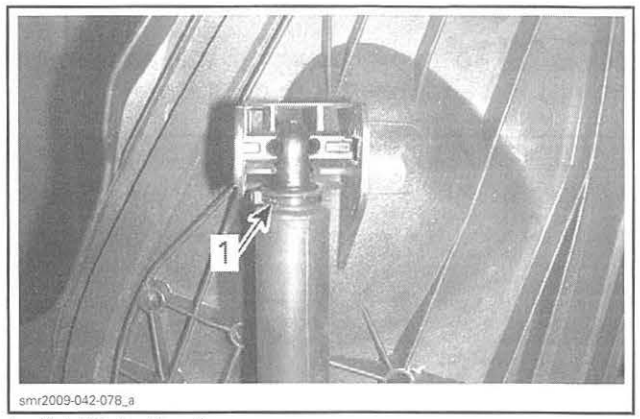

1. Cut this locking tie

4. Move bellows downward.
5. Unscrew gas shock from its upper attachment.
6. Remove gas shock from vehicle.
7. Align boarding platform hinge openings with flat sides of fixed hinges.

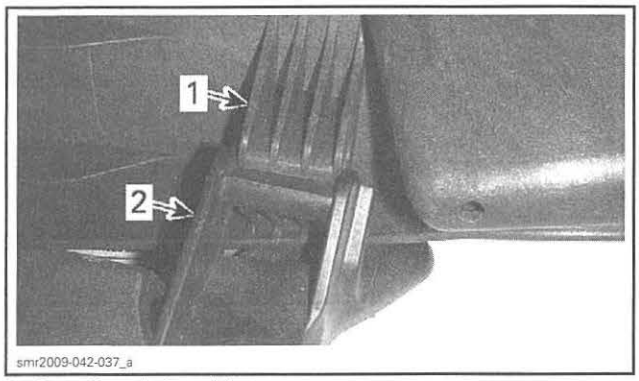

1. *Boarding platform hinge*
2. *Fixed hinge*

8. Remove boarding platform.

Boarding Platform Installation

1. Remove gas shock attachment from boarding platform.
2. Apply LOCTITE 414 (P/N 413 705 800) on threads of shock absorber body.
3. Manually tighten the attachment on gas shock.
4. Install the bellows and secure it using a locking tie.
5. Install the gas shock on cover.

NOTE: The corrugated section of bellows must point downward.

6. Align boarding platform hinge openings with flat sides of fixed hinges.
7. Push in the boarding platform to assemble hinges.
8. Position the bottom of the gas shock on cavity opening.

NOTICE **To avoid breaking the attachment, do not force to insert it in cavity.**

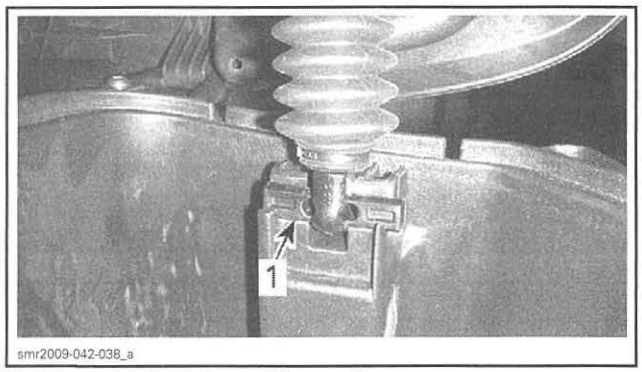

1. *Lower attachment on cavity opening*

NOTE: Make sure upper attachment is properly inserted in its slots.

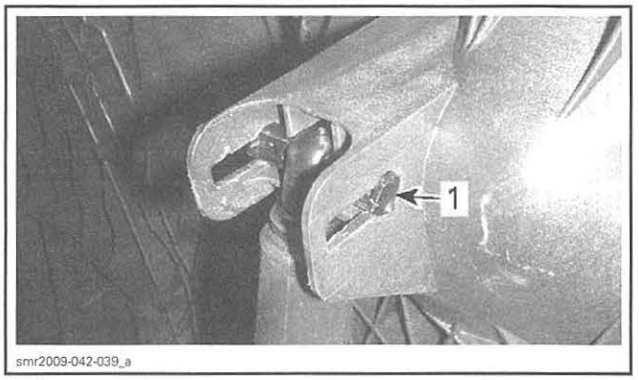

1. *Upper attachment*

9. Close boarding platform to lock the bottom of the gas shock.
10. Lock boarding platform.

DECK EXTENSION (iS AND aS MODELS)

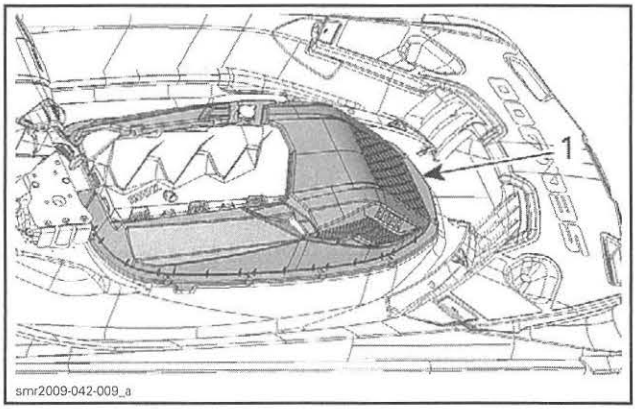

1. *Deck extension*

Deck Extension Removal

1. Open seat.
2. Remove the rear ventilation box.

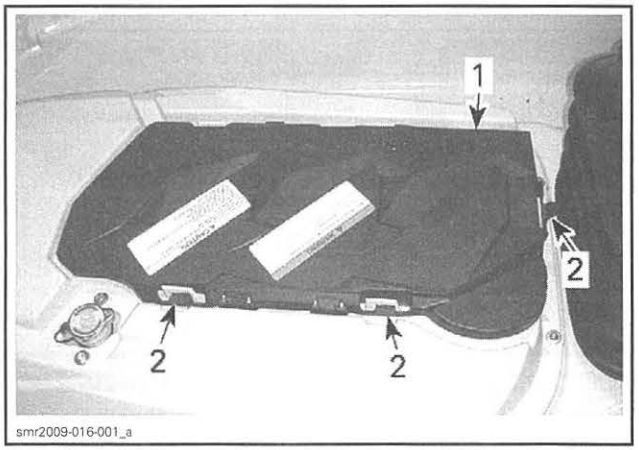

1. *Rear ventilation box*
2. *Retaining latches*

3. Remove screws securing air inlet to deck extension.

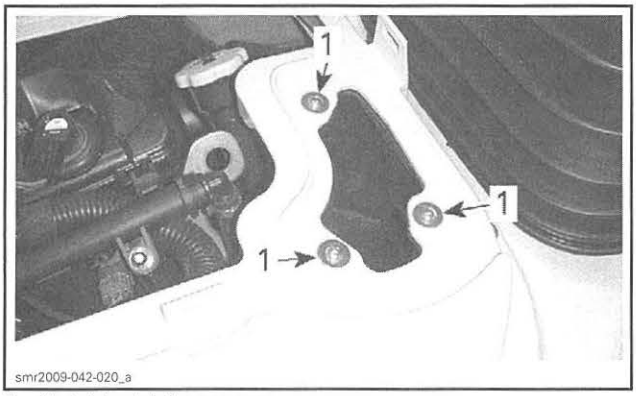

1. Air inlet retaining screws

4. Remove coolant reservoir screws.

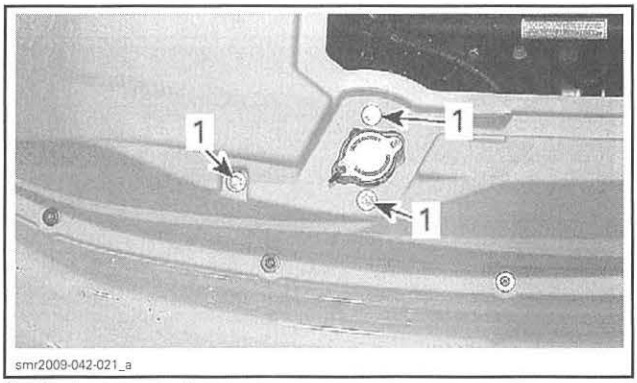

1. Coolant reservoir screws

5. Remove all screws retaining deck extension to fixed deck.
6. Close seat.
7. Tilt the *MOVING DECK*, see procedure in this subsection.
8. Remove the deck extension.

Deck Extension Installation

1. Position the deck extension.
2. Install screws retaining deck extension and air inlet.
3. Tighten deck extension retaining screws to specification.

DECK EXTENSION RETAINING SCREWS TORQUE
1.2 N•m (11 lbf•**in**)

NOTICE Do not tighten screws over this recommended torque. Otherwise, the rubber grommet could turns and screw will be hard to remove.

4. Install and tighten coolant reservoir screws to specification.

COOLANT RESERVOIR SCREWS TORQUE
5 N•m (44 lbf•**in**)

5. Reposition moving deck. Refer to *MOVING DECK* in this subsection.

MOVING DECK (iS AND aS MODELS)

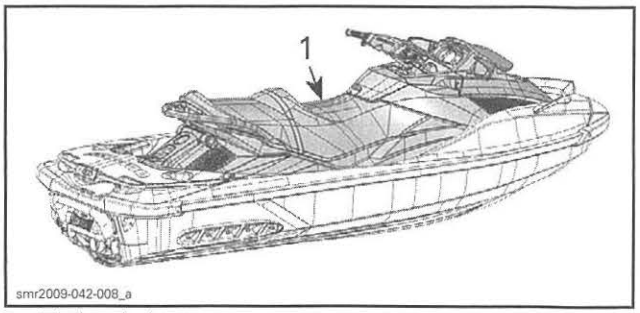

1. Moving deck

The moving deck is comprised of:
- Front storage cover
- Front body module
- Steering
- Seat
- Foot wells.

The moving deck is attached to the intelligent suspension and moves as a single unit.

The moving deck does not comprise the boarding platform and the rear storage bins.

It is possible to tilt the moving deck for servicing the watercraft, such as:
- Deck extension removal
- Working on air intake system
- Suspension position sensor replacement
- Suspension hydraulic pump replacement.

The moving deck removal is also required for major repairs, such as:
- Engine removal
- Suspension component removal (except suspension position sensor)
- Fuel tank removal.

Tilting Moving Deck for Servicing Watercraft

1. Remove the *BOARDING PLATFORM*, see procedure in this subsection.

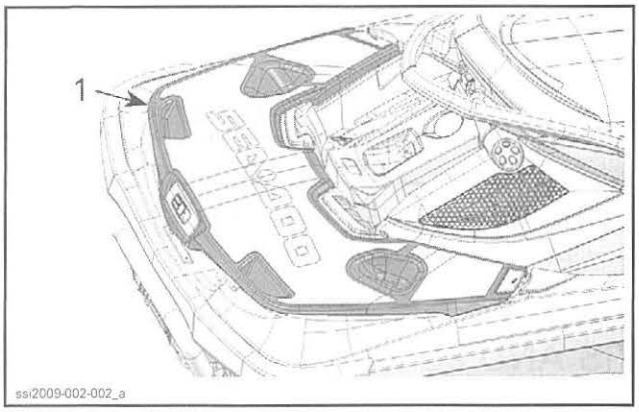

1. Boarding platform

2. Remove bolts securing both rear suspension arm covers.

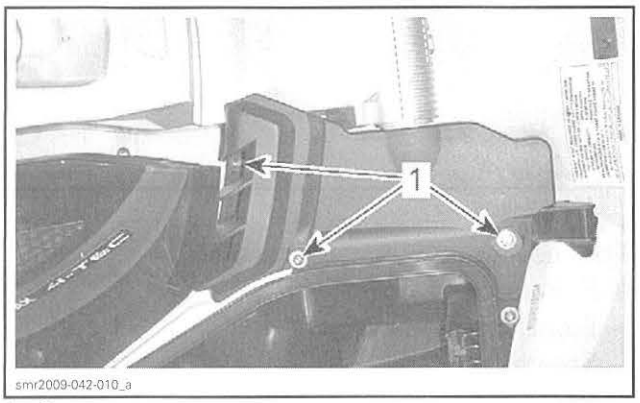

1. Cover screws

3. Mark position of rear suspension arm brackets for proper reinstallation.
4. Remove and discard screws securing rear suspension arm to fixed deck.

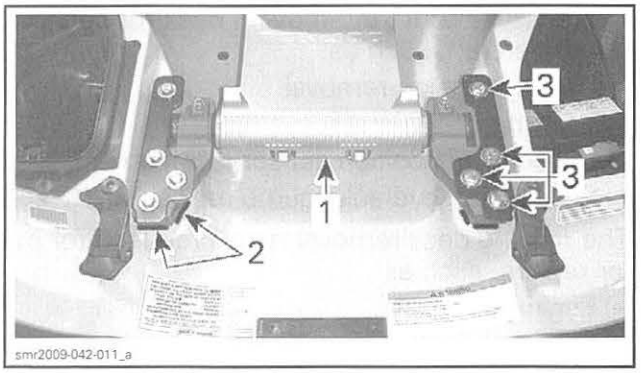

1. Rear suspension arm
2. Reinstallation marks
3. Screws (discard)

5. Lift the rear suspension arm against seat handle and attach it with locking tie or strap.

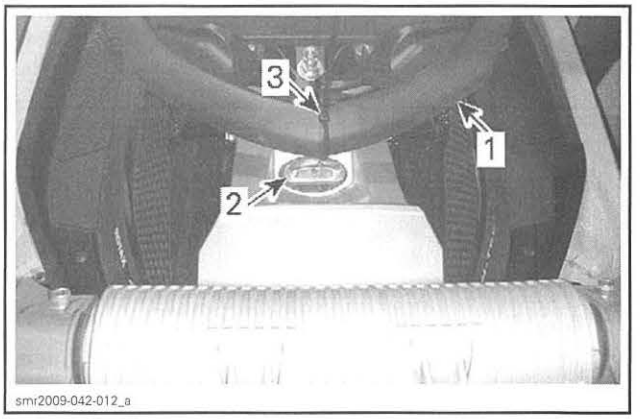

1. Seat handle
2. Ski/wakeboard attachment
3. Locking tie

6. Install two pieces of wood (4 x 4) under moving deck front area as shown to avoid potential damage when lifting the moving deck.

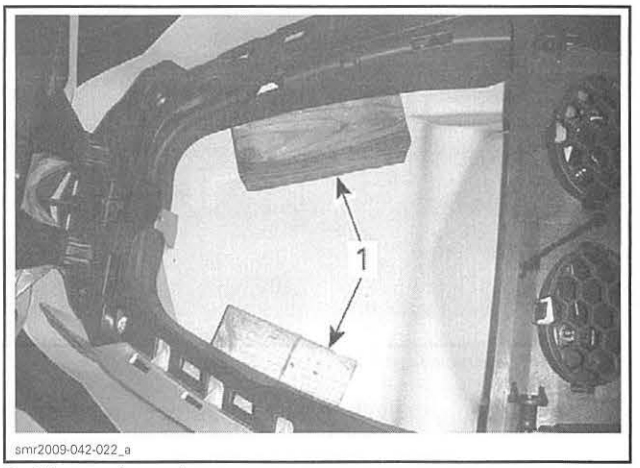

1. Pieces of wood

7. Place steering in its lower position.
8. On aS models, ensure that remote reservoir hose has enough free length before tilting the moving deck.
   - If hose is too tight, remove remote reservoir retaining screws then move hose inside deck.

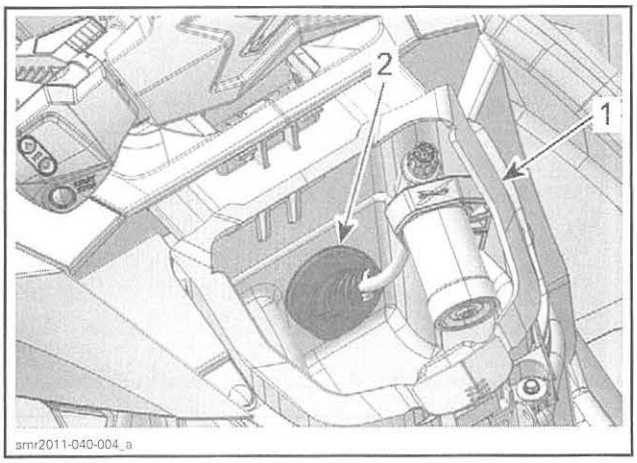

aS MODEL
1. *Remote reservoir retaining screws (2x)*
2. *Hose bellows*

9. Using suitable lifting devices, raise the rear of moving deck to 340 mm (13-1/2 in).

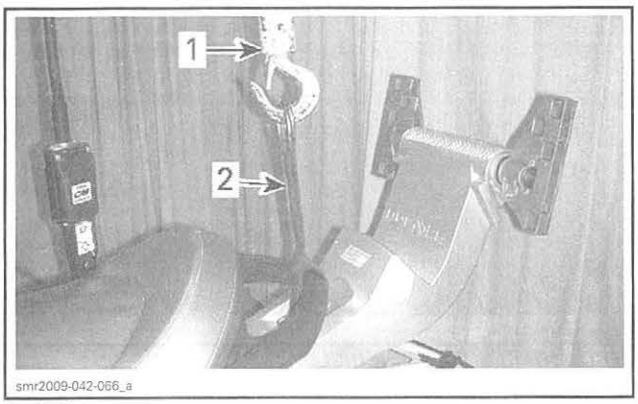

1. *Hoist*
2. *Lifting strap*

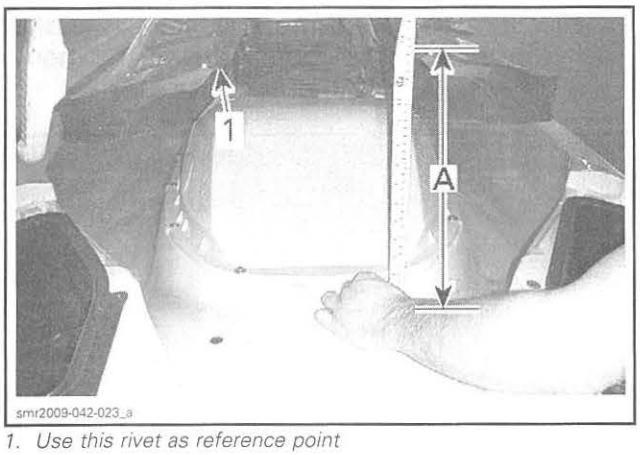

1. *Use this rivet as reference point*

A. 340 mm (13-1/2 in)

NOTICE Lifting the rear of moving deck more than the recommended height can damage the steering cable and the remote reservoir hose.

Lowering Back Moving Deck

1. Carefully lower and secure the rear suspension arm to the fixed deck.
   1.1 Position the rear suspension arm brackets in accordance with the reference marks previously drew on fixed deck.

   NOTICE If no mark was trace, refer to *IS SUSPENSION* subsection for proper procedure to install and align the rear suspension arm.

   1.2 Install NEW screws to secure rear suspension arm brackets.
   1.3 Tighten screws to specification.

REAR SUSPENSION ARM RETAINING SCREWS TORQUE
25 N•m (18 lbf•ft)

2. Detach lifting device.
3. Remove pieces of wood located under the front of moving deck.

Removing the Moving Deck for Servicing Watercraft

1. Open the front storage cover and remove the front basket.
2. On aS models, remove remote reservoir from moving deck as follows:
   2.1 Remove both retaining screws.
   2.2 Detach hose bellows from moving deck.
   2.3 Insert remote reservoir into moving deck hole.

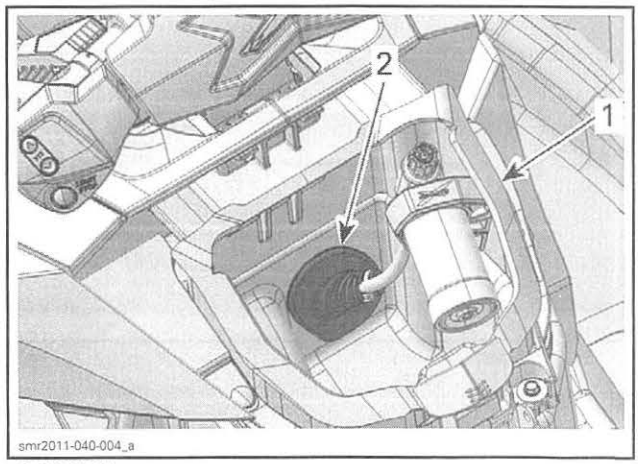

aS MODEL
1. *Remote reservoir retaining screws (2x)*
2. *Hose bellows*

3. Remove the *BOARDING PLATFORM*, see procedure in this subsection.

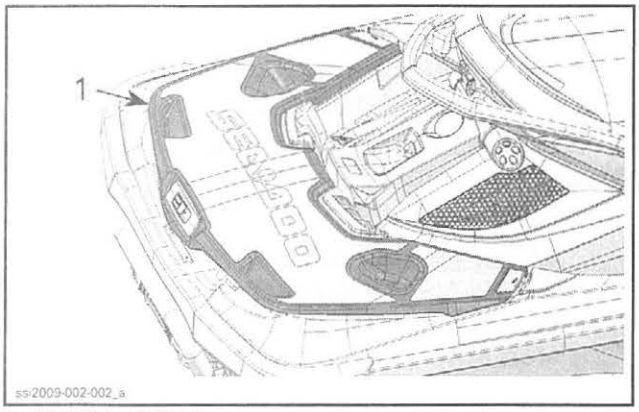

1. Boarding platform

4. Remove bolts securing both rear suspension arm covers.

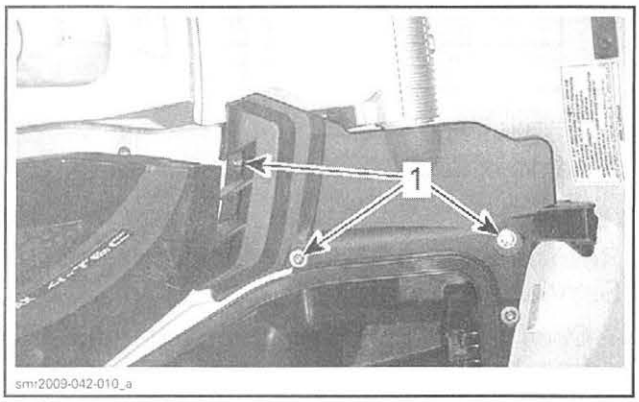

1. Cover screws

5. Mark position of rear suspension arm brackets for proper reinstallation.
6. Remove and discard screws securing rear suspension arm to fixed deck.

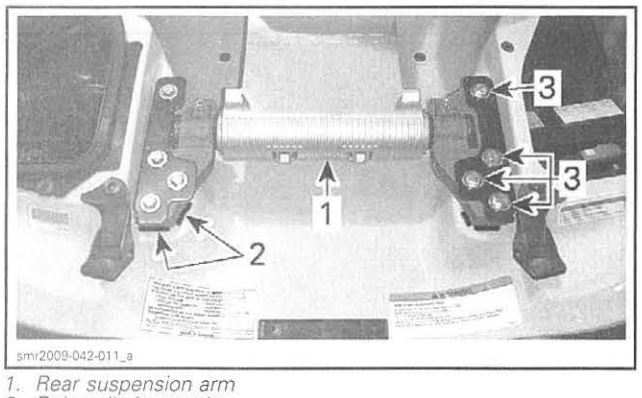

1. Rear suspension arm
2. Reinstallation marks
3. Screws (discard)

7. Lift and attach the rear suspension arm against seat handle.

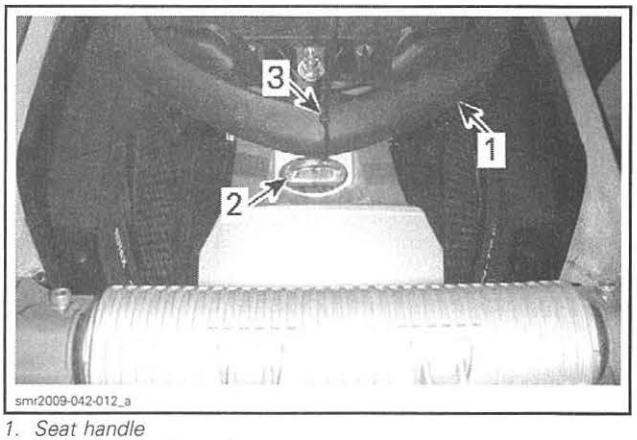

1. Seat handle
2. Ski/wakeboard attachment
3. Locking tie

8. Manually tip up the front of moving deck and install a piece of wood (2 x 4) between fixed deck and each lateral supports.

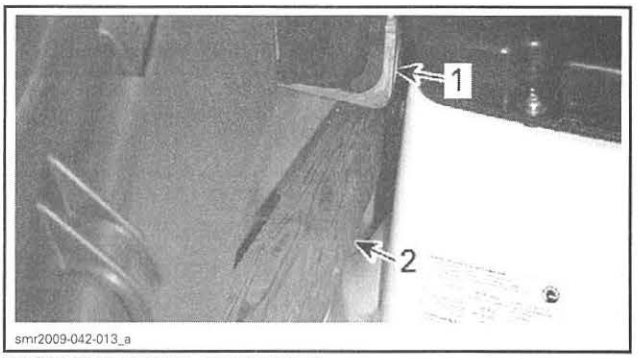

FROM THE FRONT OF VEHICLE
1. RH lateral support
2. Piece of wood

9. Detach moving deck from lateral supports.
   9.1 Remove front carpet of foot wells and protective caps on both sides of the moving deck. Discard the front carpets.

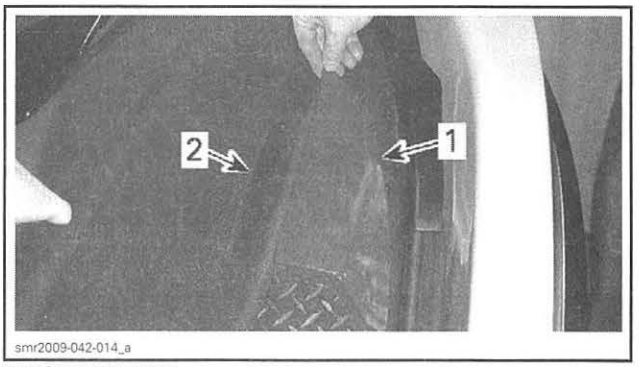

RH SIDE SHOWN
1. Front carpet (discard)
2. Protective cap

   9.2 Remove and discard screws securing moving deck to lateral supports.

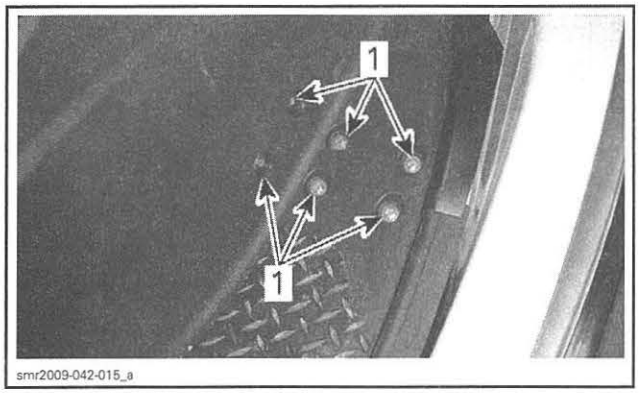

RH SIDE SHOWN
1. Retaining screws (discard)

10. Open seat.
11. Remove and discard M8 screws securing the suspension mounting plate and moving deck.

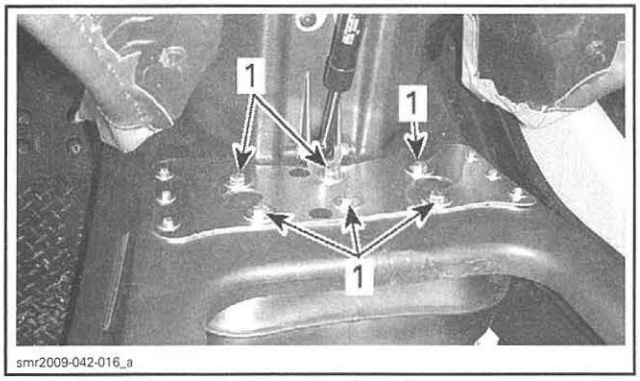

1. Moving deck central screws (to discard)

12. Close seat.
13. Remove the gauge support. Refer to *INFORMATION CENTER (GAUGE)* subsection.

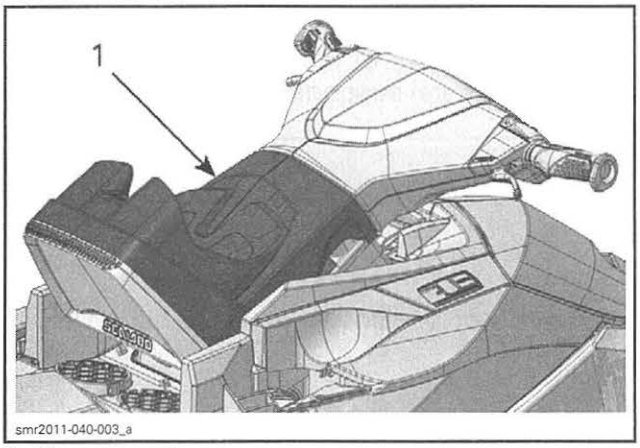

1. Gauge support

14. Disconnect both connectors under moving deck.

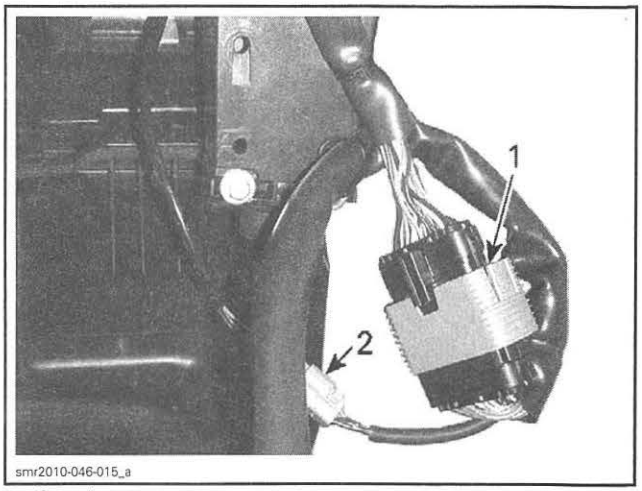

1. Steering connector
2. O.T.A.S. connector

15. Detach steering cable from steering column.
    15.1 Remove bolt securing ball joint to steering column.

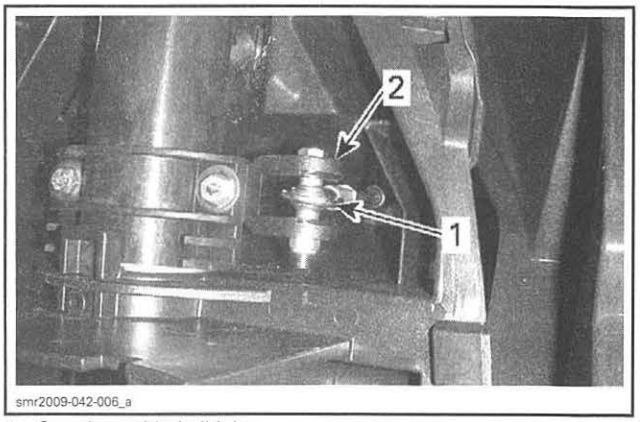

1. Steering cable ball joint
2. Steering column

    15.2 Remove bolts retaining steering cable clamp.
    15.3 Unlatch steering cable clamp.

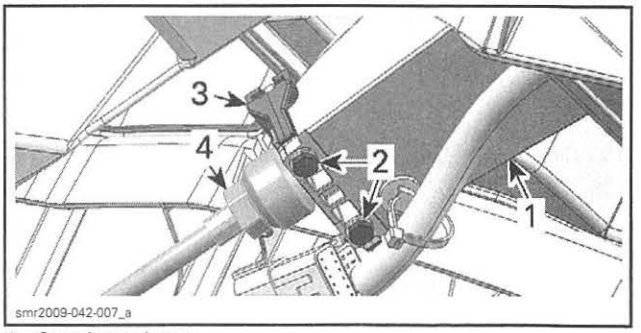

1. Steering column
2. Steering column clamp bolts
3. Steering column clamp
4. Steering cable adjusting nut

    15.4 Place steering in its lower position.

15.5 Free steering cable from fixed clamp.

16. Install lifting straps.

16.1 Using both mooring cleats under steering, install two lifting straps.

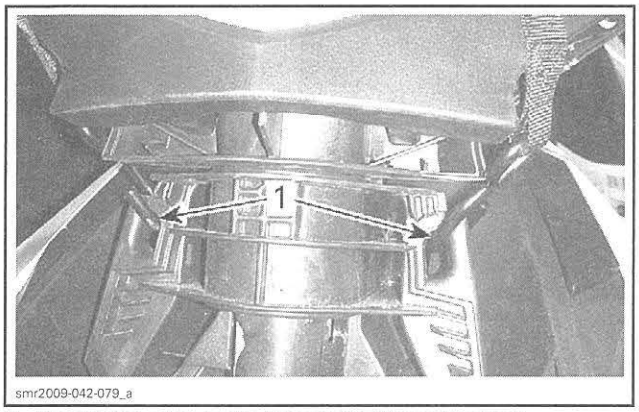

1. Front lifting strap hooks into steering mooring cleats

16.2 Install another lifting strap on seat handle.

17. Attach all lifting straps to an lifting device to lift the moving deck.

⚠ CAUTION Make sure lifting device is located at the center of the vehicle to rise moving deck horizontally.

18. Raise moving deck slowly and drive steering cable out of steering column.

19. Place the moving deck on a level surface.

Moving Deck Installation

1. Install 2 pieces of wood under lateral supports.

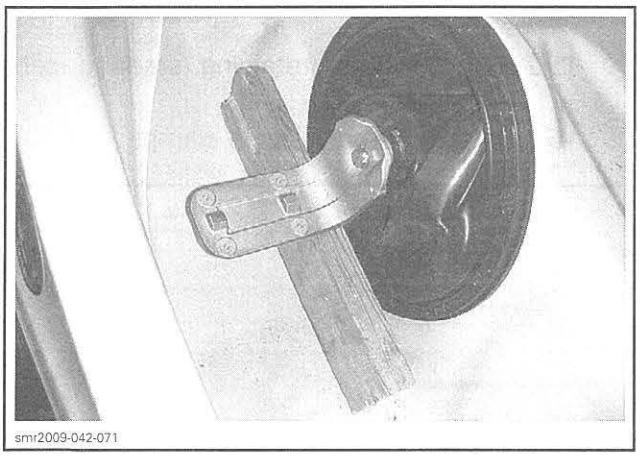

2. Slowly, lower the moving deck just enough to be able to insert the end of steering cable in steering column.

NOTICE Make sure not to pinch electrical harness while lowering the moving deck.

3. Install steering cable clamp and its bolts. Do not tighten bolts yet.

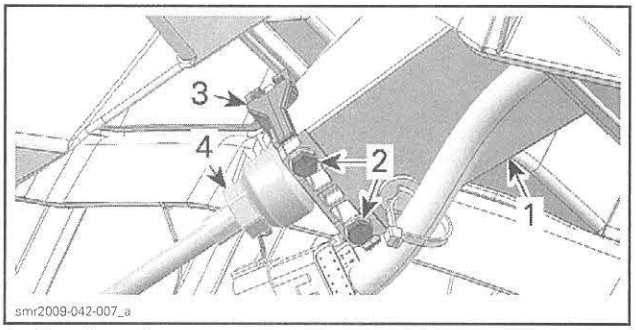

1. Steering column
2. Steering column clamp bolts
3. Steering column clamp
4. Steering cable adjusting nut

4. Connect both electrical connectors under moving deck.

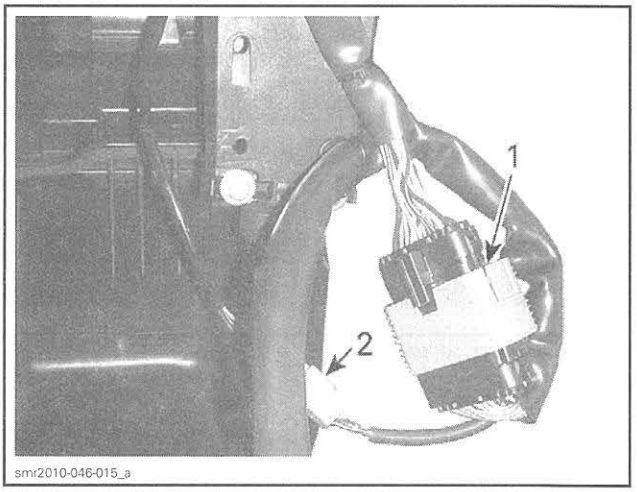

1. Steering connector
2. O.T.A.S. connector

5. Lower the front of moving deck and secure it on both lateral supports using NEW screws.

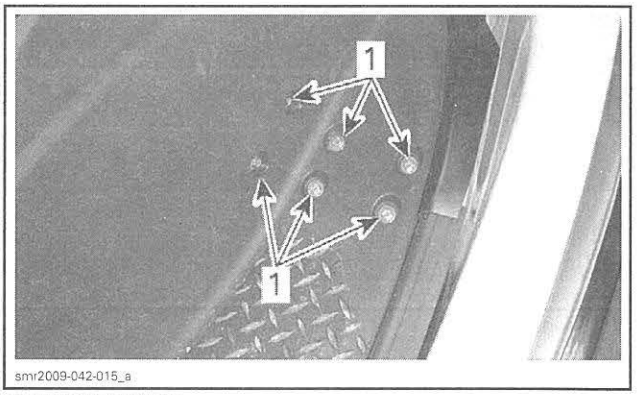

RH SIDE SHOWN
1. Retaining screws (new)

6. Remove pieces of wood located under lateral supports and reposition one under moving deck front area.

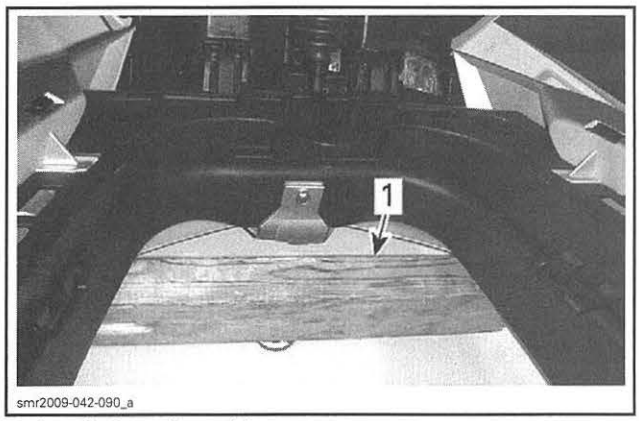

1. Install piece of wood here

7. Remove the front lifting straps.
8. Open seat.
9. Raise rear of moving deck until suspension is clear of moving deck.

NOTICE Do not raise the rear of moving deck more than 340 mm (13-1/2 in).

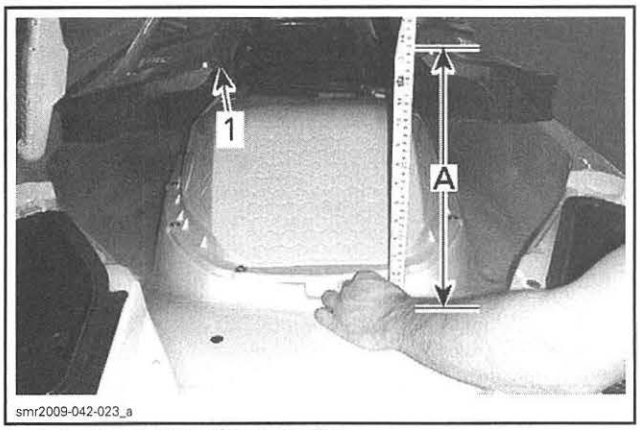

1. Use this rivet as reference point
A. 340 mm (13-1/2 in)

10. Install two homemade alignment pins on suspension mounting plate.
    10.1 Take two M8 x 50 bolts and cut their heads.
    10.2 Grind down the cut ends to make a rounded shape.

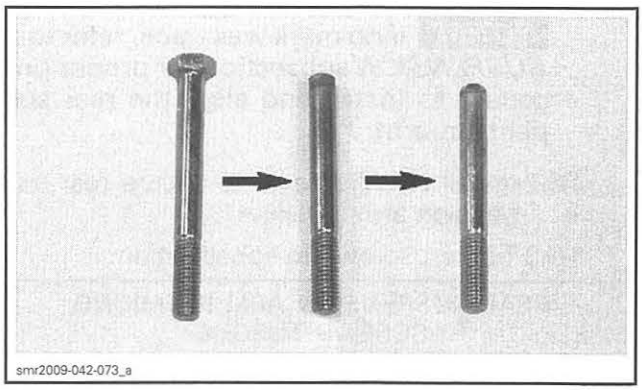

10.3 Install alignment pins into the 2 rear outside positions of suspension mounting plate.

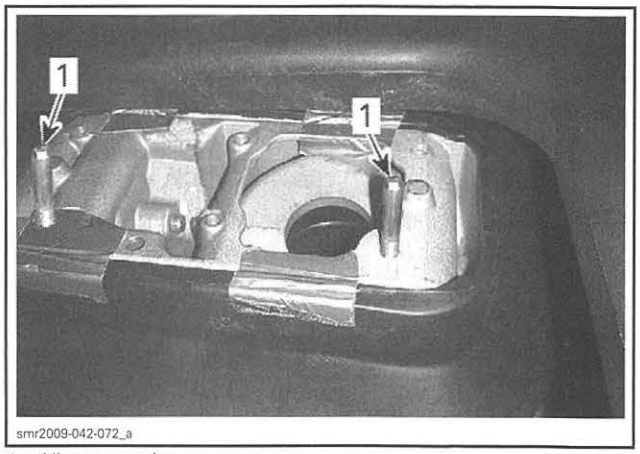

1. Alignment pins

11. Position the moving deck so that alignment pins are aligned with suspension reinforcement plate holes.
12. Lower the moving deck over alignment pins.
13. Install **NEW** M8 screws to secure the moving deck to suspension mounting plate.

NOTE: Remove the alignment pins only when 2 screws are engaged in mounting plate.

14. Tighten screws to specification.

MOVING DECK RETAINING SCREWS TORQUE (M8)
25 N•m (18 lbf•ft)

15. Close seat.
16. Carefully lower and secure the rear suspension arm to the fixed deck.
    16.1 Position the rear suspension arm brackets in accordance with the reference marks previously drew on fixed deck.

NOTICE If no mark was trace, refer to *iS SUSPENSION* subsection for proper procedure to install and align the rear suspension arm.

16.2 Install NEW screws to secure rear suspension arm brackets.

16.3 Tighten screws to specification.

REAR SUSPENSION ARM RETAINING SCREWS TORQUE
25 N•m (18 lbf•ft)

17. Remove rear lifting strap.
18. Attach steering cable to steering column.
19. Install gauge support. Refer to *INFORMATION CENTER (GAUGE)* subsection.
20. On aS models, install remote reservoir on moving deck.
21. Install NEW front carpets on foot wells and protective caps on moving deck.
22. Check steering alignment then tighten steering clamp bolts. Refer to *STEERING* subsection.

FRONT GRILLE (iS AND aS MODELS)

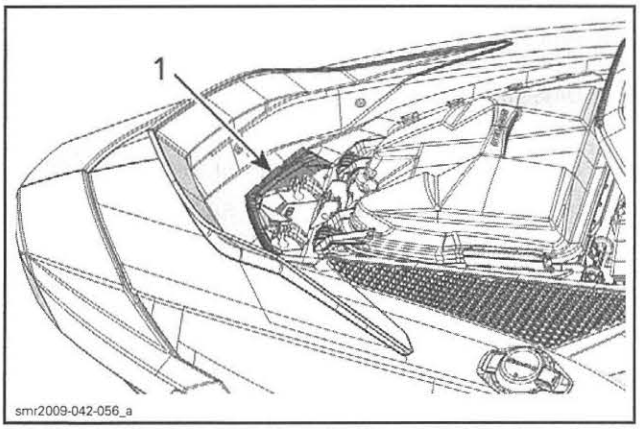

LOCATED UNDER STORAGE COMPARTMENT COVER
1. Front grille

Front Grille Removal

1. Remove the *STORAGE COMPARTMENT COVER*, see procedure in this subsection.
2. Press on both tabs securing front grille to front body module.

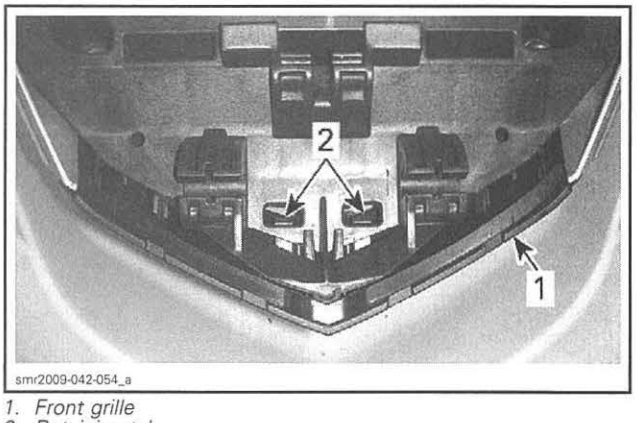

1. Front grille
2. Retaining tabs

3. Remove grille.

Front Grille Installation

The installation is the reverse of the removal procedure.

SPLASH DEFLECTOR (iS AND aS MODELS)

Splash Deflector Removal

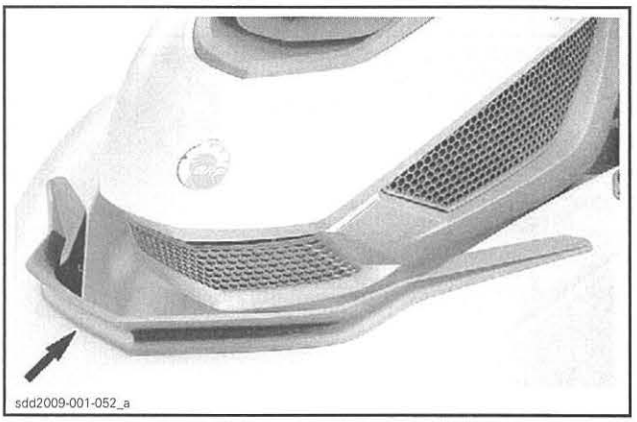

1. To remove the splash deflector, drill out the 4 rivets securing the splash deflector to the fixed deck.
2. Pull the deflector from the fixed deck.

NOTICE A molded location pin at each end of the deflector are each inserted into the fixed deck. Be careful not to break them when removing the deflector.

Splash Deflector Installation

1. Position the splash deflector over the forward end of the fixed deck and press the guide pins into the holes provided in the deck.
2. Install four new rivets to secure the deflector to the deck.

REAR VENTILATION BOX (iS AND aS MODELS)

Rear Ventilation Box Removal

1. Open seat.
2. Release all retaining latches.

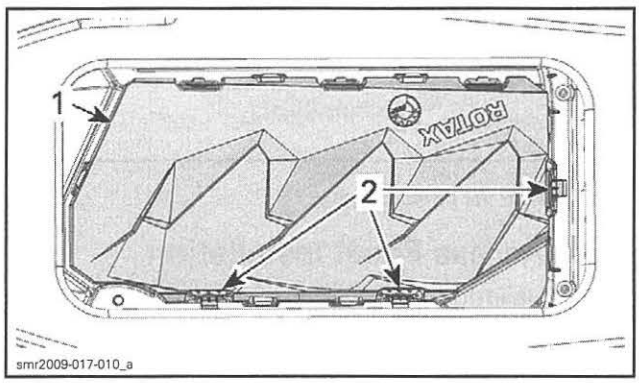

1. Ventilation box
2. Retaining latches

3. Remove the ventilation box.

Rear Ventilation Box Installation

The installation is the reverse of the removal procedure. However, pay attention to the following.

Before installing the ventilation box, check the condition of its seal.

If the seal is damaged, replace the ventilation box as an assembly.

FRONT VENTILATION BOX (iS AND aS MODELS)

Front Ventilation Box Removal

1. Open the front storage cover and remove the storage basket.
2. Remove screws securing the ventilation box to fixed deck.

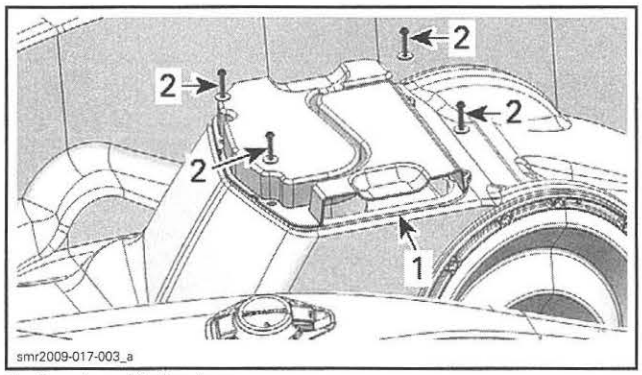

1. Front ventilation box
2. Retaining screws

3. Remove the ventilation box.

Front Ventilation Box Installation

The installation is the reverse of the removal procedure. However, pay attention to the following.

Before installing the ventilation box, check the condition of its seal.

If the seal is damaged, replace the ventilation box.

Tighten ventilation box screws to specification.

VENTILATION BOX SCREWS TORQUE
1.2 N•m (11 lbf•**in**)

AIR INTAKE DUCT (iS AND aS MODELS)

Air Intake Duct Removal

Remove engine. Refer to *ENGINE REMOVAL AND INSTALLATION* subsection.

Remove the suspension base. Refer to *iS SUSPENSION* subsection.

Remove air intake duck from vehicle.

Air Intake Duct Installation

Install suspension base. Refer to *iS SUSPENSION* for complete procedure.

Install engine. Refer to *ENGINE REMOVAL AND INSTALLATION*.

After deck extension installation, tighten screws retaining the air intake duct to deck extension to specification.

AIR INTAKE DUCT RETAINING SCREWS TORQUE
1.2 N•m (11 lbf•**in**)

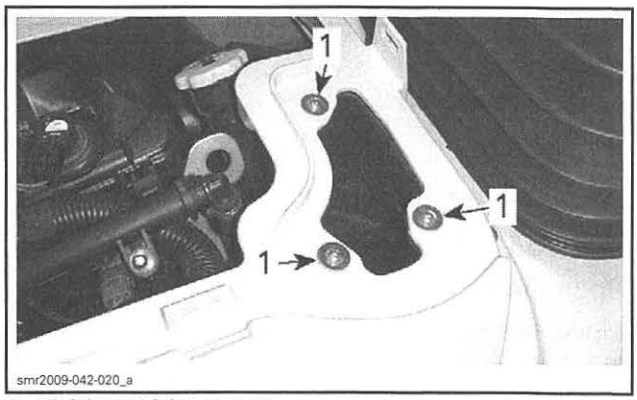

1. Air inlet retaining screws

REAR ACCESS PANELS (MODELS WITHOUT iS OR aS)

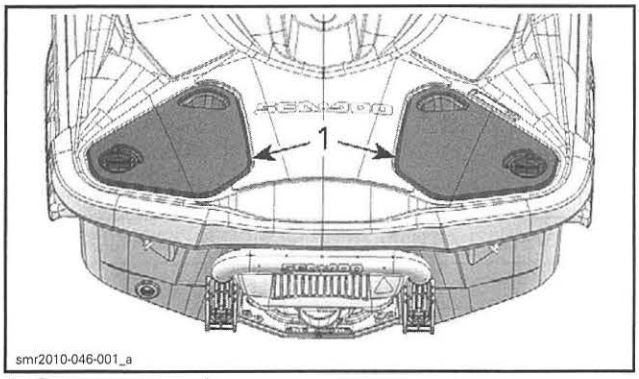

1. Rear access panels

Rear Access Panel Removal

Turn the lock handle to select the UNLOCK position.

- LH access panel: turn lock handle counterclockwise.
- RH access panel: turn lock handle clockwise.

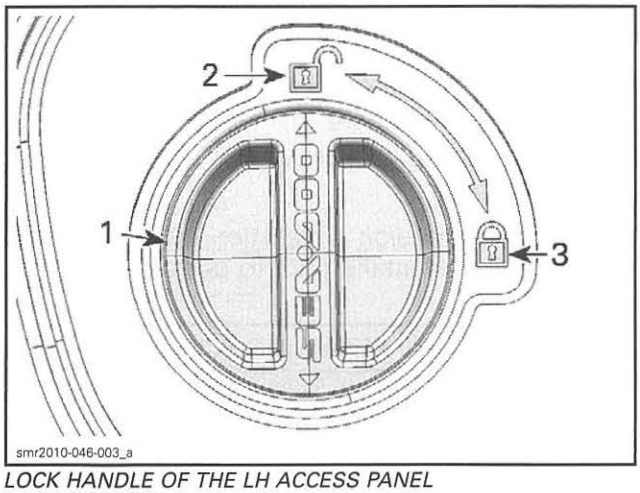

LOCK HANDLE OF THE LH ACCESS PANEL
1. Lock handle
2. UNLOCK position
3. LOCK position

RXT X

Open and remove the panel.

GTX 155, RXT 215 and WAKE Pro 215

Open the panel completely.

Move the bottom of the panel outwards to remove it.

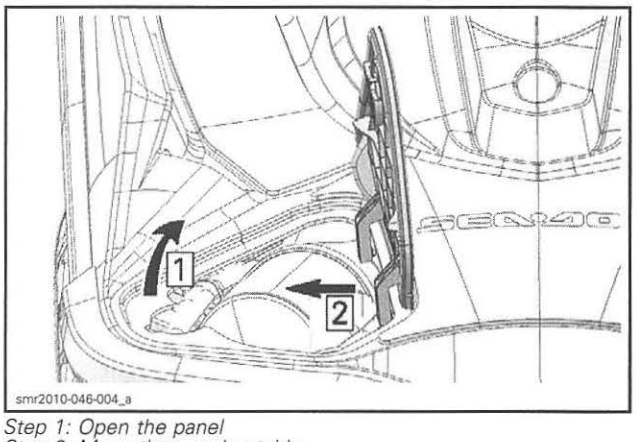

Step 1: Open the panel
Step 2: Move the panel outside

Rear Access Panel Installation

The installation is the reverse of the removal procedure. However, pay attention to the following.

GTX 155, RXT 215 and WAKE Pro 215

Insert rubber stoppers under the deck.

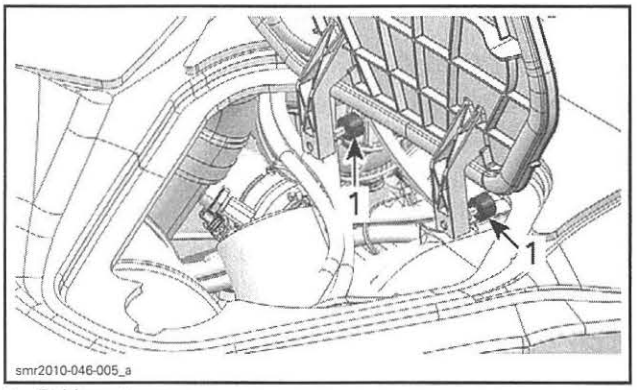

1. Rubber stoppers

Close the panel partially and center it into the deck cavity.

Press the corner, near the lock handle, against the deck and turn the lock handle in the LOCK position.

Midwest Manuals
Green Manuals
Paperless Manuals
For a Better Tomorrow
If you bought this manual from any other seller please leave them NEGATIVE feedback and notify me at bestshopmanuals@gmail.com

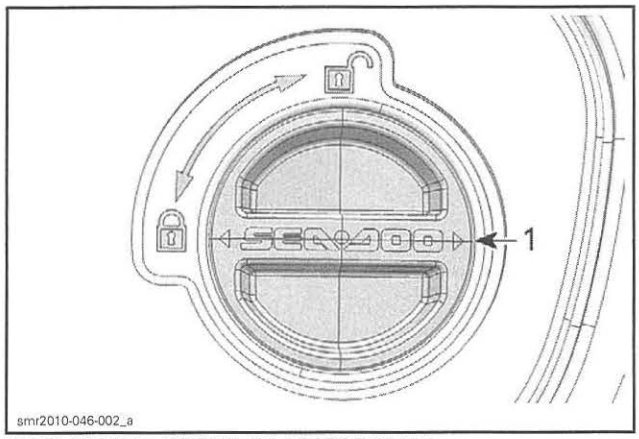

LOCK HANDLE OF THE RH ACCESS PANEL
1. Lock handle in LOCK position

WAKE PYLON (WAKE PRO 215)

Wake Pylon Removal

Open the seat.

Remove both lateral arms.

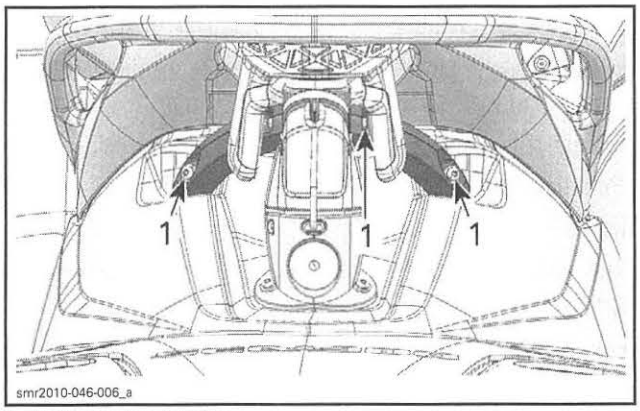

1. Lateral arms screws

Remove bolts at the bottom of wake pylon.

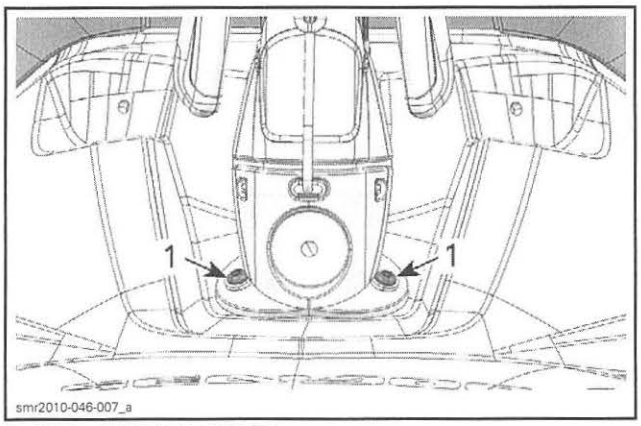

1. Wake pylon bottom bolts

Remove bolts securing the wake pylon support to body.

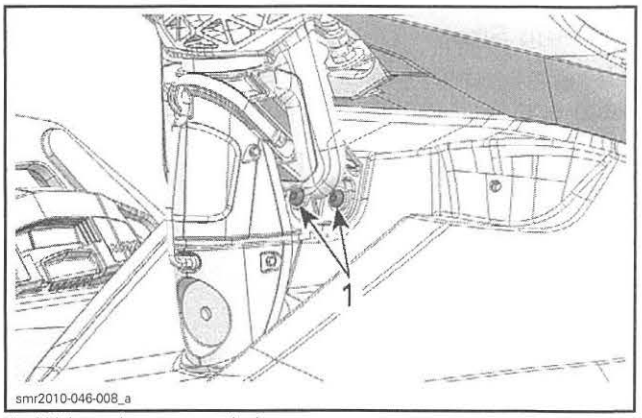

1. Wake pylon support bolts

Lift the wake pylon to disengage its bottom from the body.

Slide the bottom of the wake pylon rearward to remove the wake pylon from vehicle.

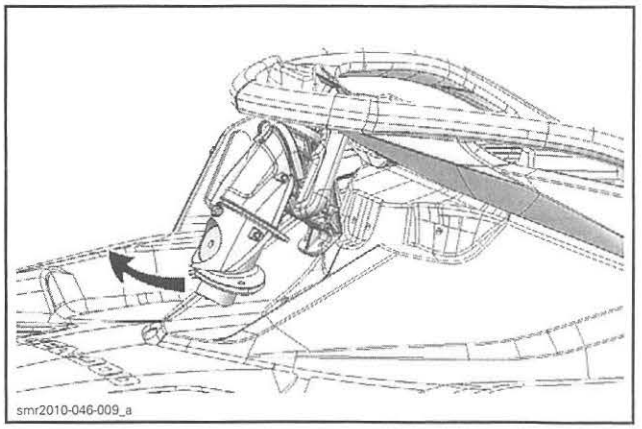

Wake Pylon Disassembly

Extend the handle completely.

Turn the wake pylon upside down.

Move both ends of locking strap to disengage the inner lock and free the handle.

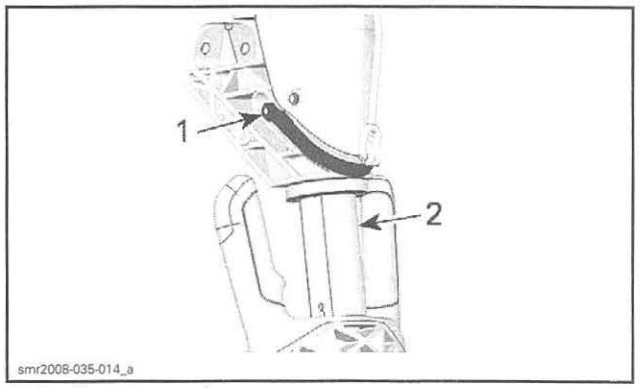

1. Locking strap end
2. Handle stem

Locking Strap

Using a screwdriver or any other suitable tool, detach a side of the locking strap from retaining pin.

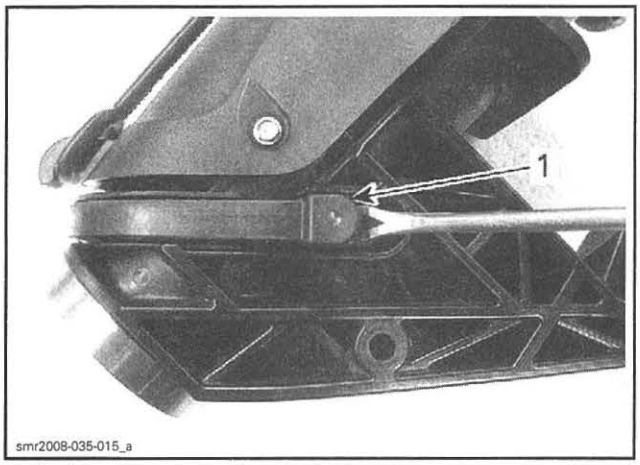

1. Locking strap

Remove locking strap and the inner lock.

Handle

Extend handle approximately 75 mm to 90 mm (3 in to 3-1/2 in).

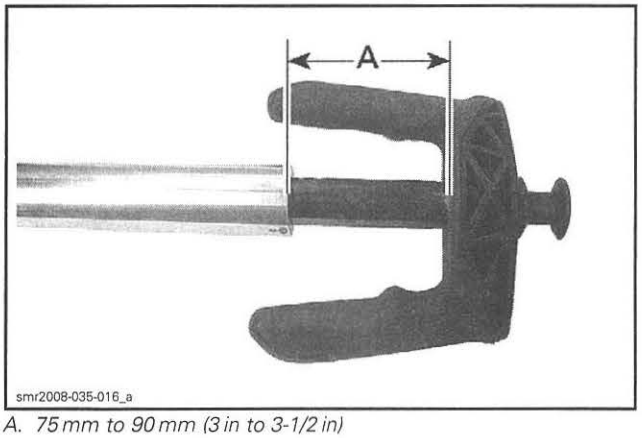

A. 75 mm to 90 mm (3 in to 3-1/2 in)

Insert two thin feeler gauges between handle stem and extension tube.

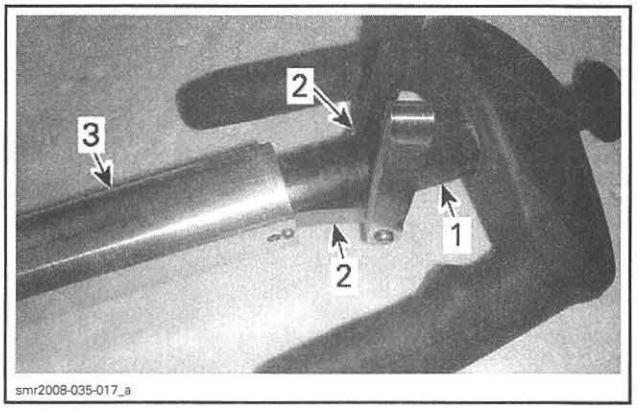

1. Handle stem
2. Feeler gauges
3. Extension tube

Place a rag around the joint to catch balls and spring.

Hold feeler gauges and pull the handle.

Wake Pylon Assembly

Handle

Install a loose locking tie on handle stem.

Apply XPS SYNTHETIC GREASE (P/N 293 550 010) on each ends of spring.

Insert the spring in the handle stem hole.

Position a ball on each ends of spring.

Install a feeler gauge over each balls.

Tighten the locking tie in order to retain feeler gauges and balls.

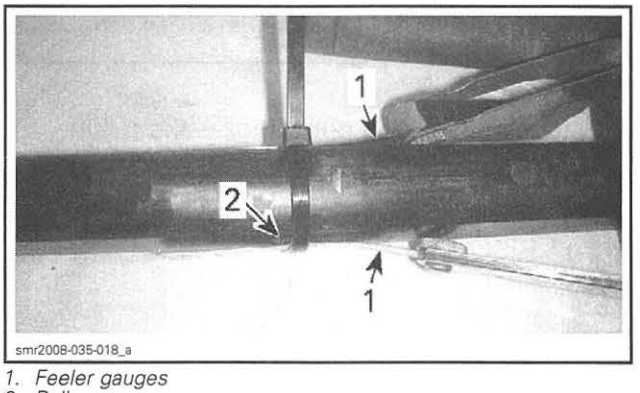

1. Feeler gauges
2. Ball

Apply XPS SYNTHETIC GREASE (P/N 293 550 010) in both recesses of the extension tube.

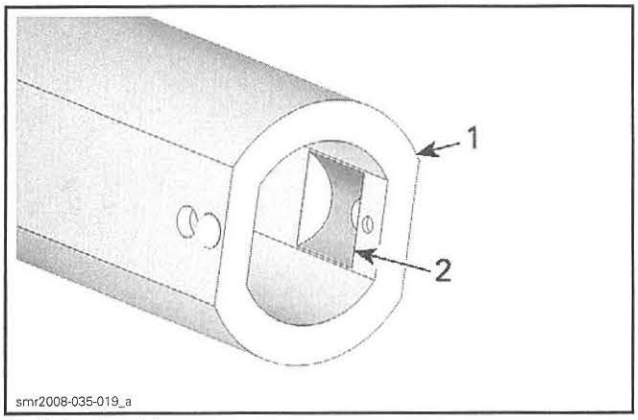

1. *Extension tube*
2. *Recesses*

Slide the handle stem into the extension tube.

Remove feeler gauges and locking tie.

Locking Strap

Remove the wake pylon trim.

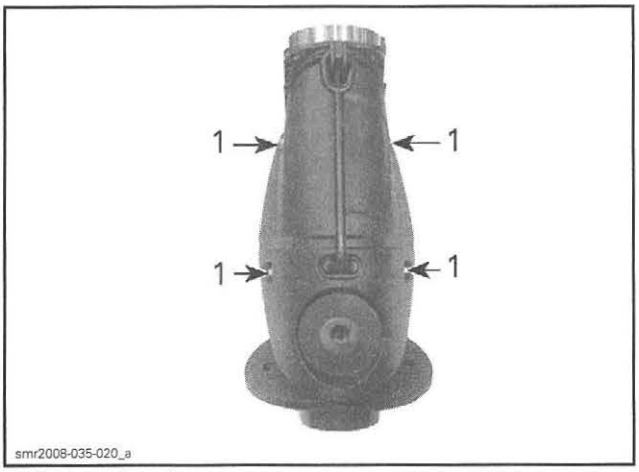

1. *Wake pylon trim screws*

Install lock and insert the end of the locking strap over the retaining pin.

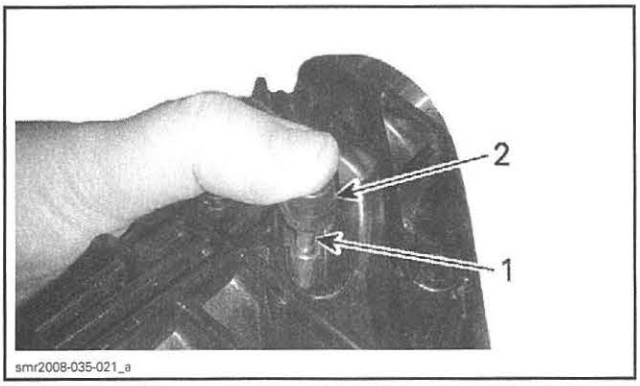

1. *Retaining pin*
2. *Locking strap*

Using a suitable tool, position the locking strap in its groove.

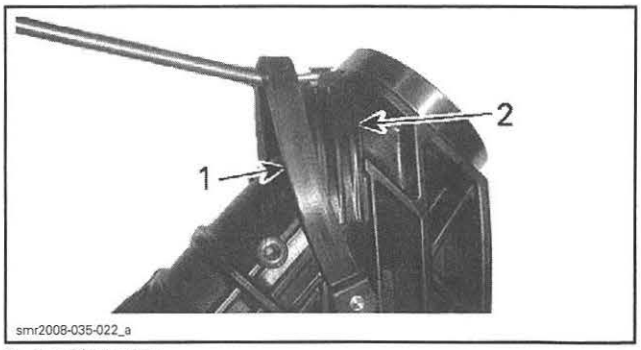

1. *Locking strap*
2. *Locking strap groove*

Reinstall the wake pylon trim.

Do not install the handle into wake pylon yet.

Wake Pylon Installation

Position the wake pylon on vehicle.

Install and secure wake pylon and lateral arms using previously removed fasteners and new elastic stop nuts.

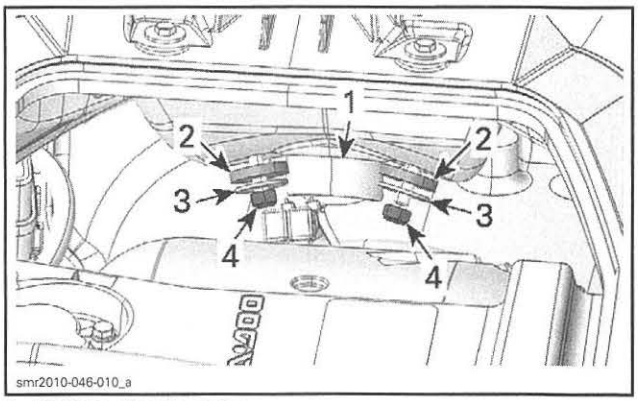

1. *Bottom of wake pylon*
2. *Rubber washers*
3. *Flat washers*
4. *New elastic stop nuts*

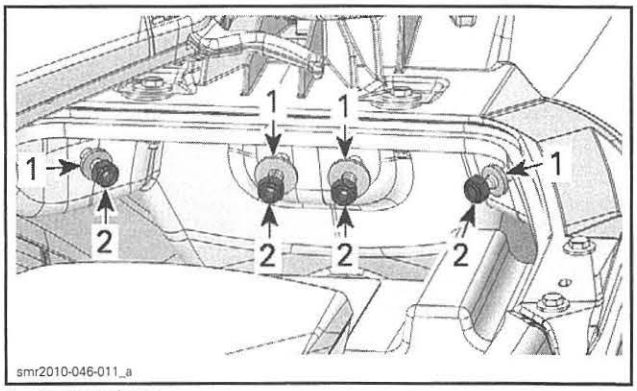

1. *Flat washers*
2. *New elastic stop nuts*

Tighten all bolts by hand.

Ensure base of wake pylon is well leaned against body.

Tighten all bolts as per the following sequence.

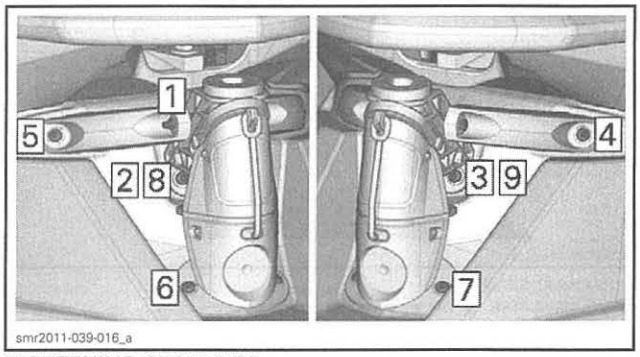

TIGHTENING SEQUENCE

Insert the handle into the wake pylon.

Move both ends of the locking strap forward to fully insert the handle.

BODY (RXP)

SERVICE TOOLS

Description	Part Number	Page
SUPERTANIUM DRILL BIT 3/16"	529 031 800	673–674, 677

SERVICE PRODUCTS

Description	Part Number	Page
LOCTITE 243 (BLUE)	293 800 060	674

BODY PARTS NOMENCLATURE

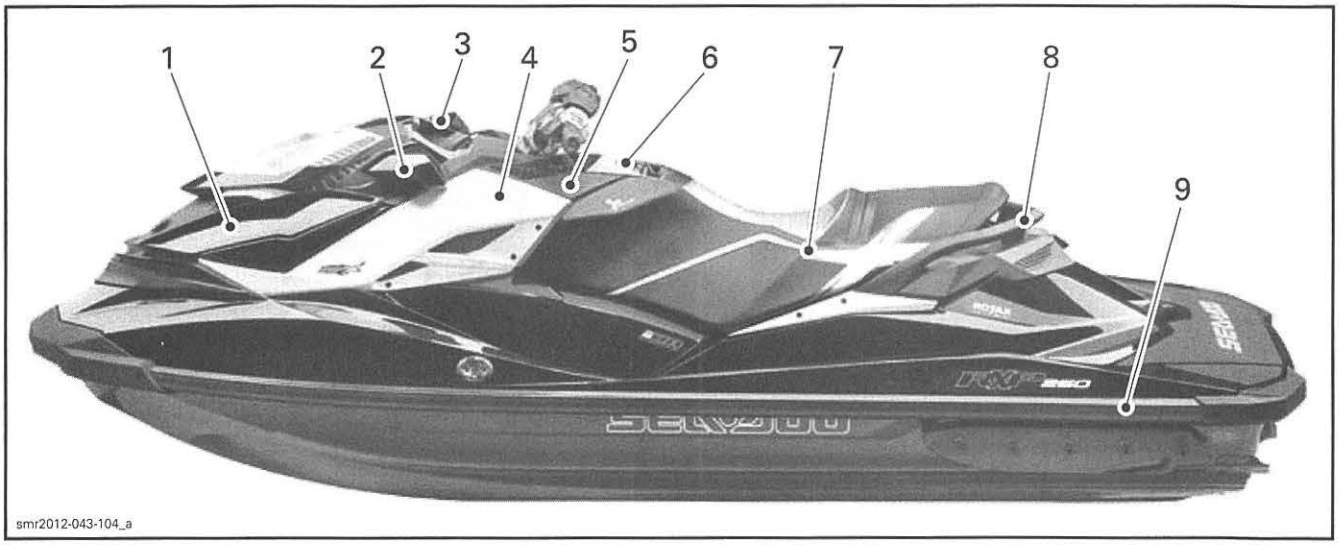

1. *Storage compartment cover*
2. *Mirror support*
3. *Gauge trim*
4. *Lateral trim panel*
5. *Console*
6. *Glove box cover*
7. *Seat*
8. *Rear handle*
9. *Bumper*

STORAGE COMPARTMENT COVER

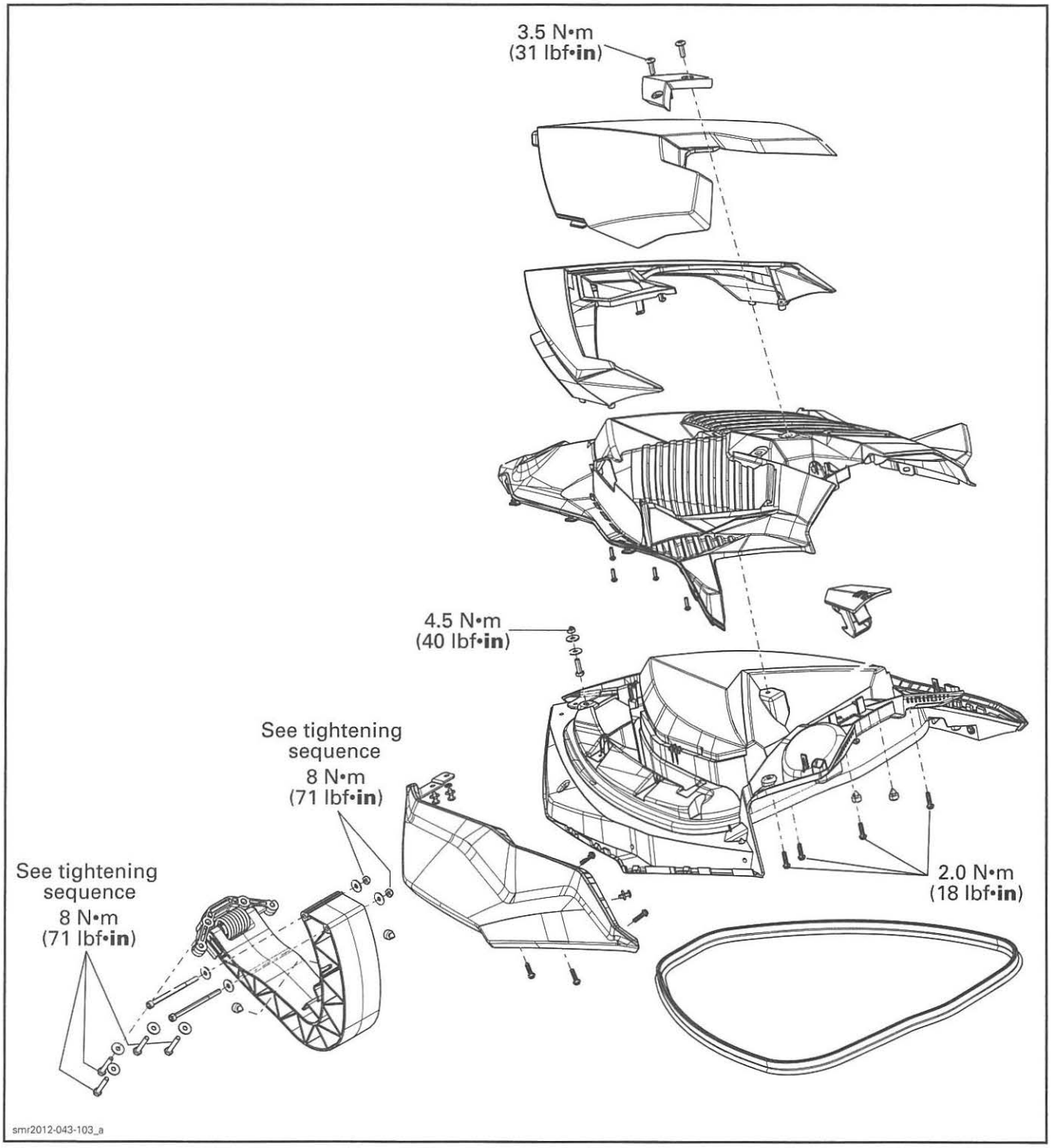

BODY PARTS

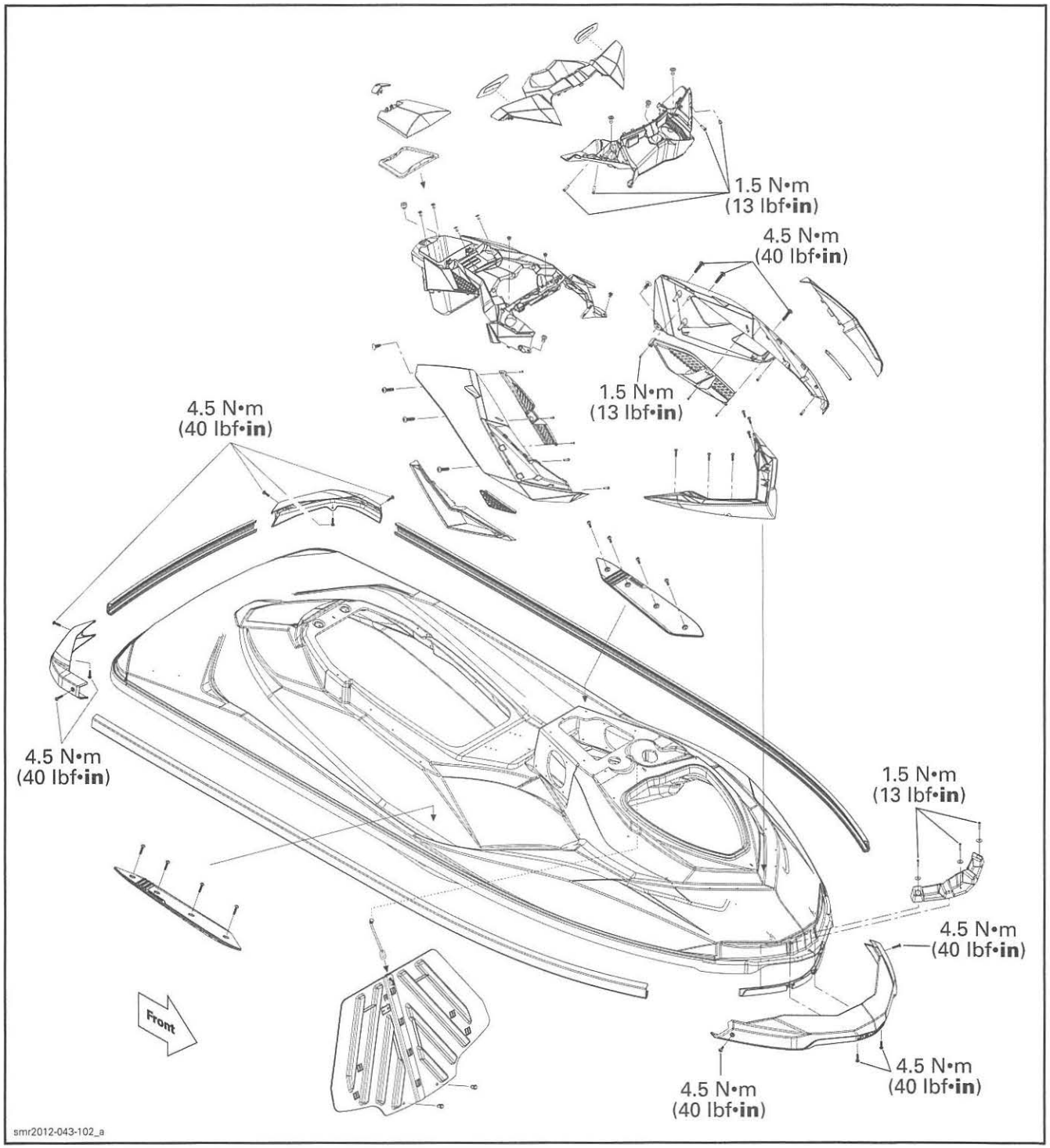
1.5 N•m
(13 lbf•in)
4.5 N•m
(40 lbf•in)
1.5 N•m
(13 lbf•in)
4.5 N•m
(40 lbf•in)
4.5 N•m
(40 lbf•in)
1.5 N•m
(13 lbf•in)
4.5 N•m
(40 lbf•in)
4.5 N•m
(40 lbf•in)
4.5 N•m
(40 lbf•in)
Front
smr2012-043-102_a

BODY PARTS

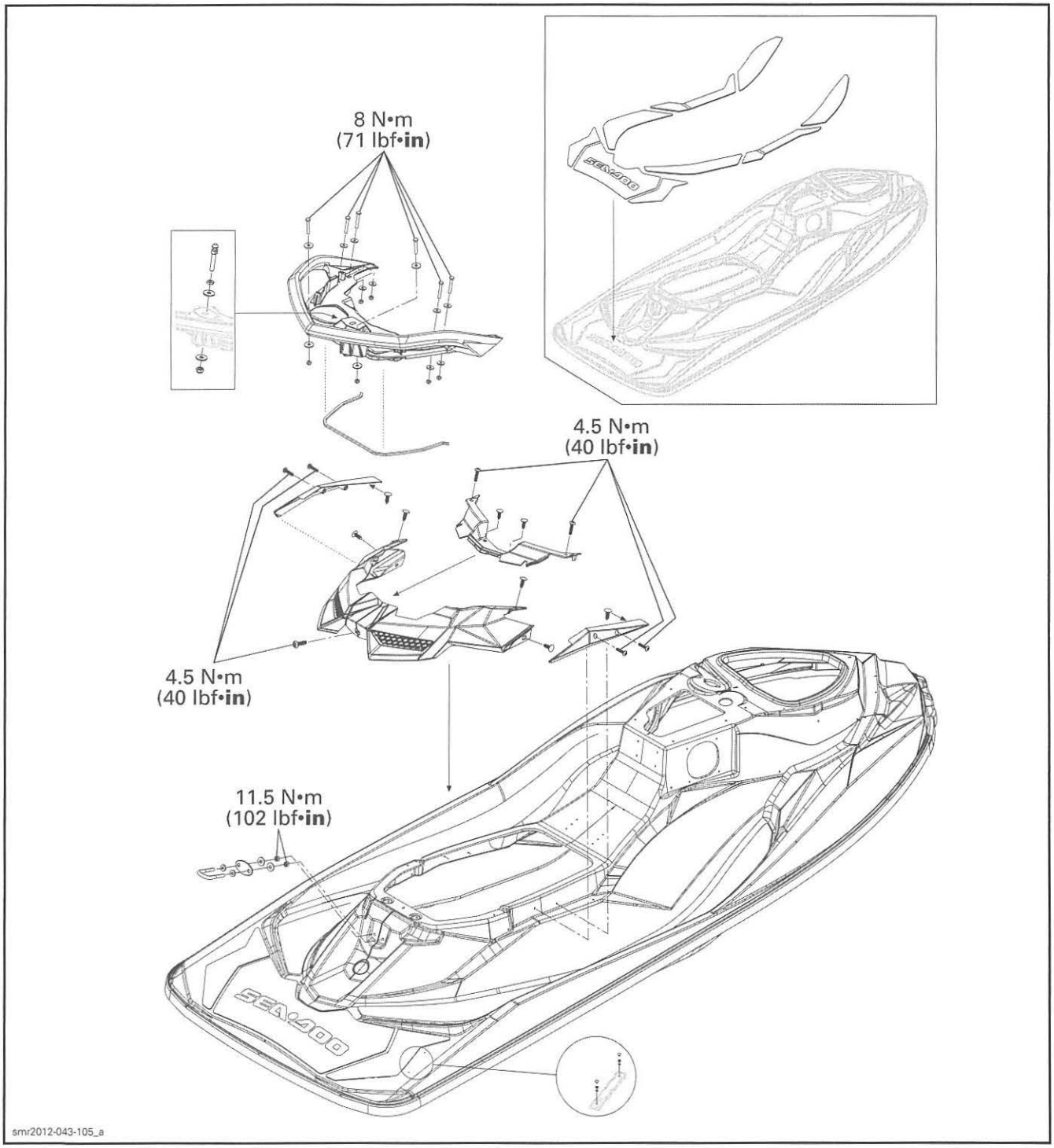
8 N•m
(71 lbf•in)
4.5 N•m
(40 lbf•in)
4.5 N•m
(40 lbf•in)
11.5 N•m
(102 lbf•in)
SEA-DOO
SEA-DOO
smr2012-043-105_a

VENTILATION

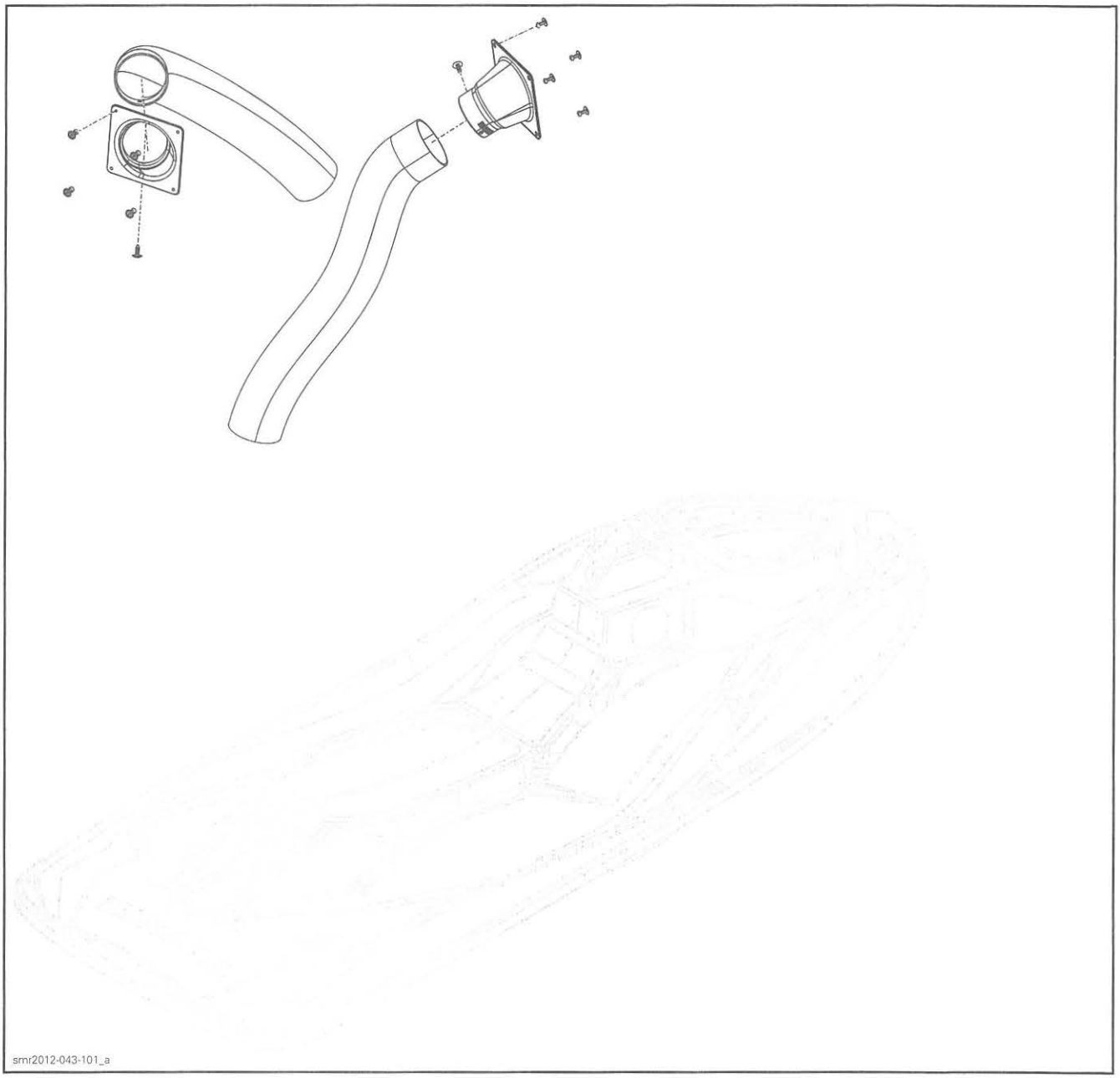

SEAT

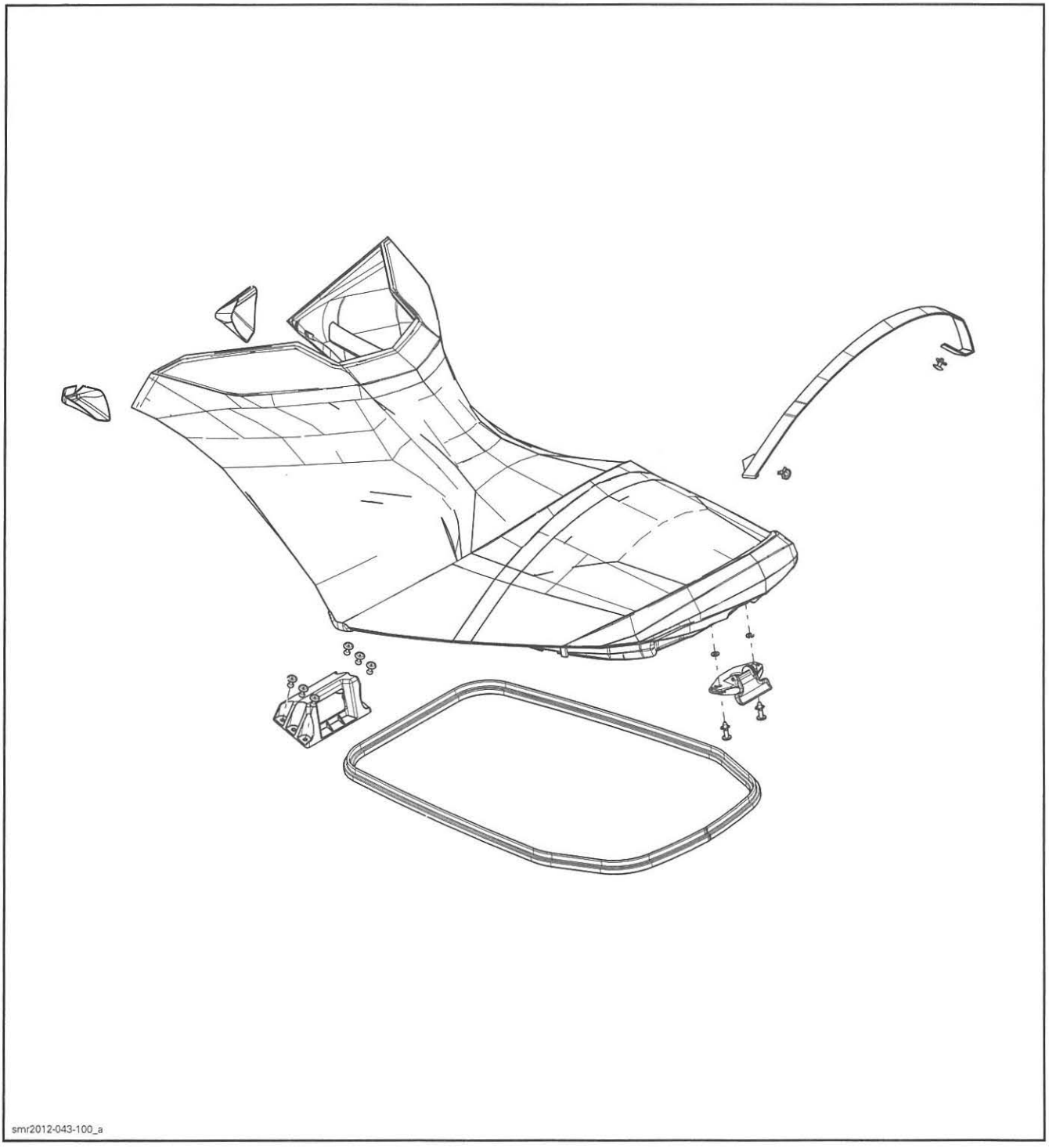

smr2012-043-100_a

PROCEDURES

GELCOAT

For information and repair, refer to *BODY (RXT/GTX/WAKE PRO)* subsection.

DECALS

For information and repair, refer to *BODY (RXT/GTX/WAKE PRO)* subsection.

CARPETS

For information and repair, refer to *BODY (RXT/GTX/WAKE PRO)* subsection.

STORAGE COMPARTMENT COVER

Storage Compartment Cover Removal

1. Open storage compartment cover.
2. Remove nuts and bolts securing storage compartment cover to hinge.

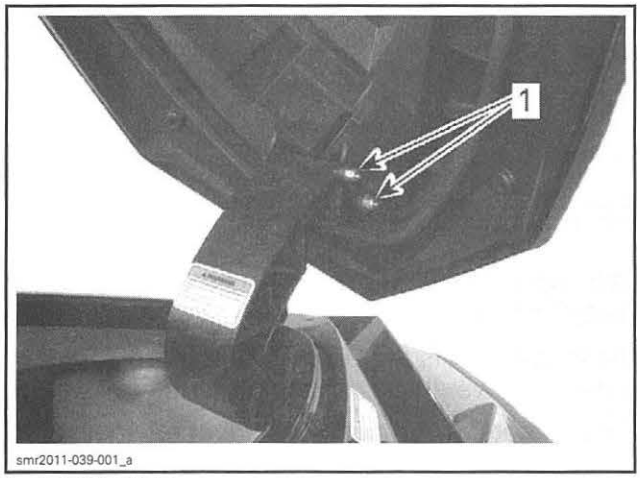

1. Retaining nuts

3. Remove storage compartment cover.

Storage Compartment Cover Disassembly

Storage Compartment Cover Inner Shell

1. Remove BRP logo located at the front of cover.

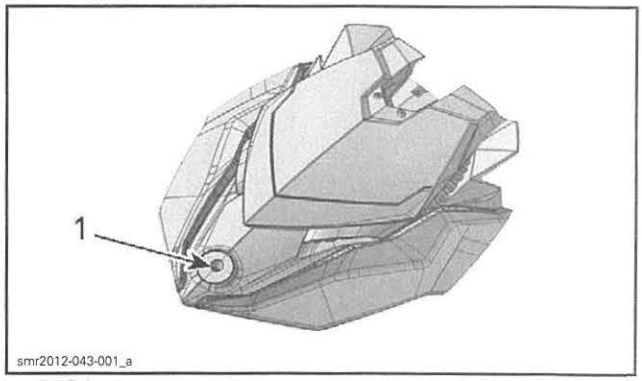

1. BRP logo

2. Remove inner shell retaining bolt.

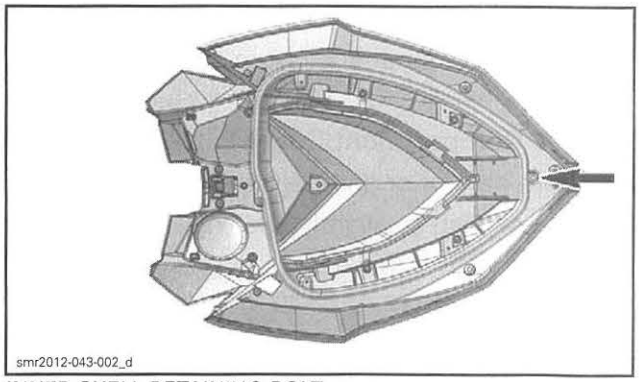

INNER SHELL RETAINING BOLT

3. Remove inner shell retaining screws.

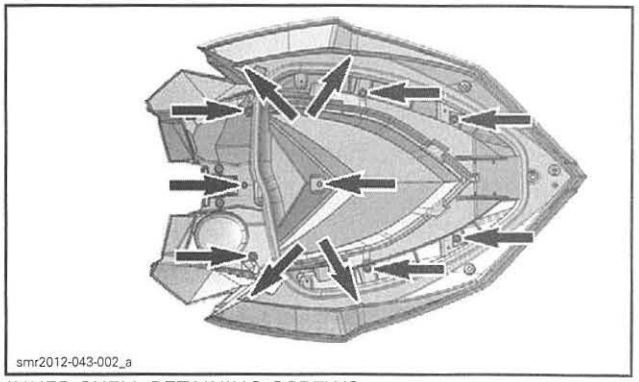

INNER SHELL RETAINING SCREWS

4. Unlatch retaining tabs on both sides using a screwdriver.

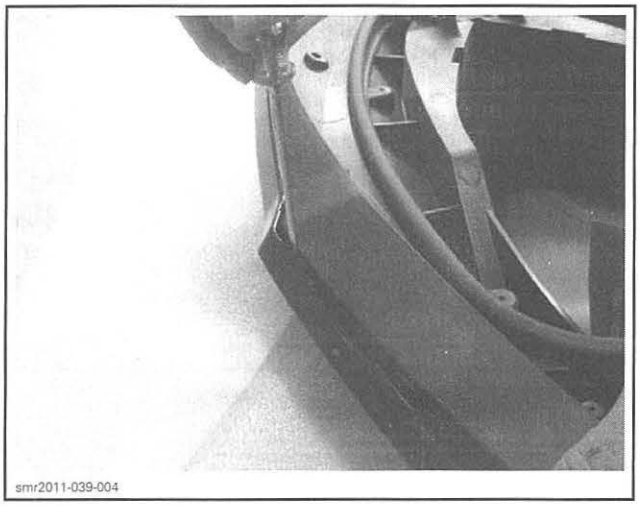

5. Disassemble inner shell from storage compartment cover.

Storage Compartment Cover Latch

1. Ensure that inner shell is removed.
2. Remove latch by slightly pushing both retaining holes toward the inside.

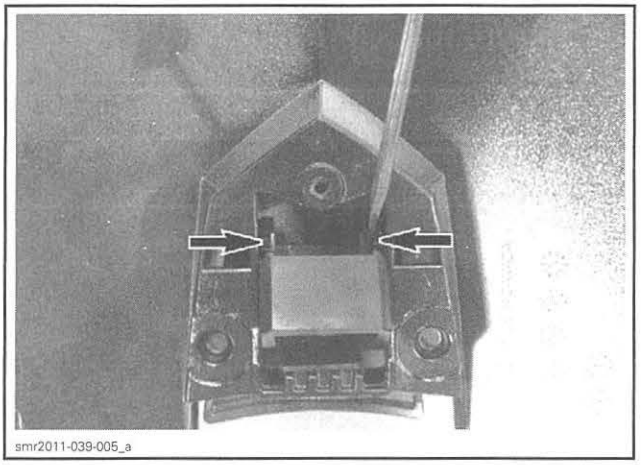

Storage Compartment Cover Assembly

The assembly is the reverse of the disassembly procedure. However, pay attention to the following.

Tighten inner shell retaining bolt to specification.

TIGHTENING TORQUE	
Inner shell retaining bolt	4.5 N•m (40 lbf•**in**)

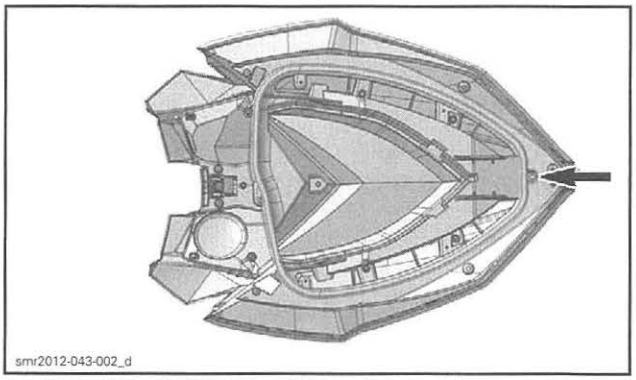

INNER SHELL RETAINING BOLT

Tighten inner shell retaining screws to specification as per the following sequence.

TIGHTENING TORQUE	
Inner shell retaining screws	2.0 N•m (18 lbf•**in**)

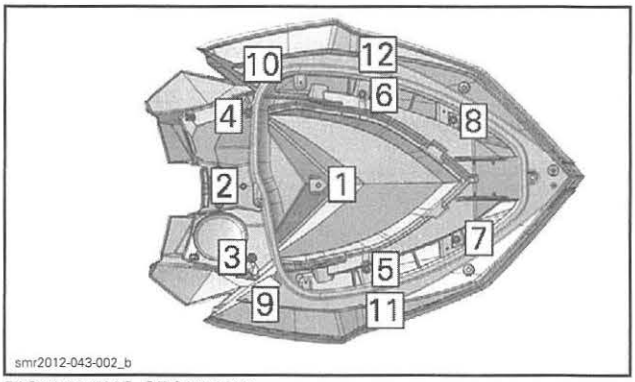

TIGHTENING SEQUENCE

Storage Compartment Cover Installation

The installation is the reverse of the removal procedure. However, pay attention to the following.

Tighten storage compartment cover retaining nuts to specification as per the following sequence.

TIGHTENING TORQUE	
Storage compartment cover retaining nuts	8.0 N•m (71 lbf•**in**)

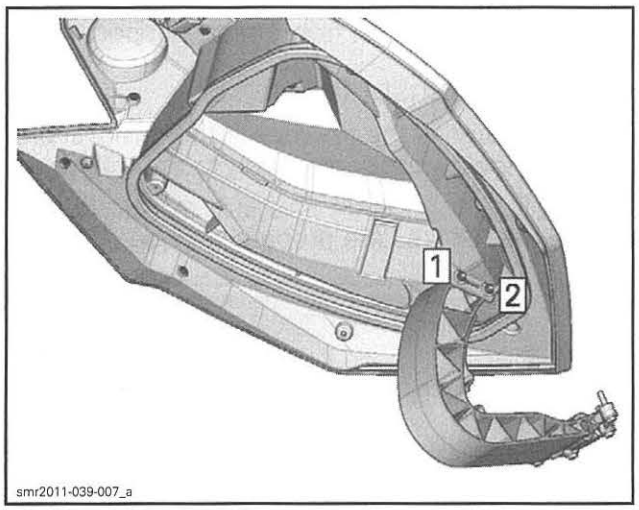

TIGHTENING SEQUENCE

STORAGE COMPARTMENT COVER HINGE

Storage Compartment Cover Hinge Removal

1. Proceed with *STORAGE COMPARTMENT COVER REMOVAL.*
2. Remove screws securing storage compartment cover hinge to deck.

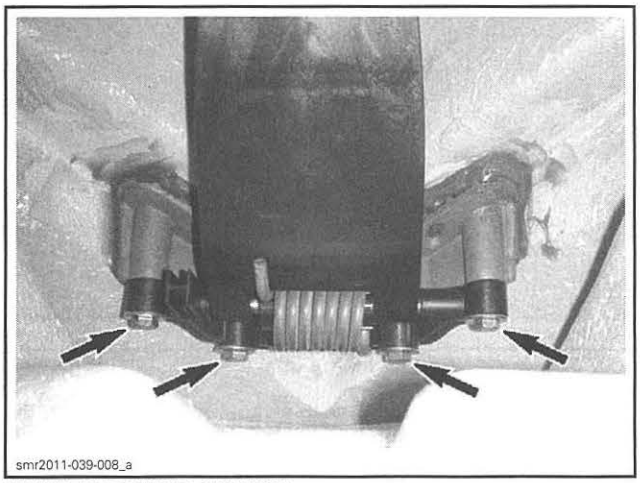

HINGE RETAINING SCREWS

Storage Compartment Cover Hinge Installation

The installation is the reverse of the removal procedure. However, pay attention to the following.

Use a ø 6.5 mm (1/4 in) steel rod to make a hook in order to lock the hinge.

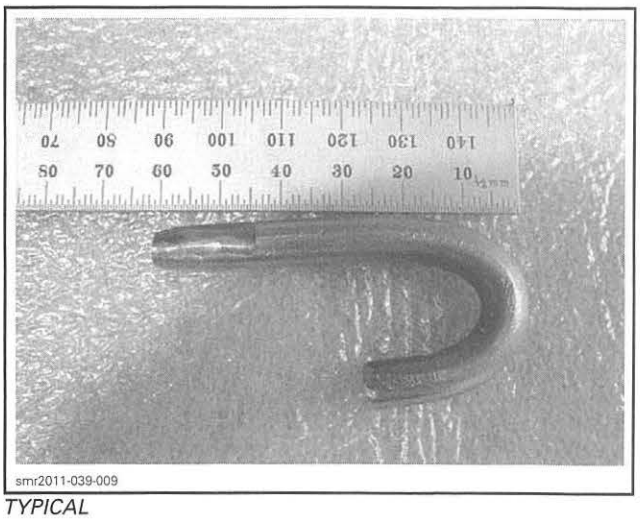

TYPICAL

Insert the steel hook on the lateral tab of hinge in order to slightly load the spring.

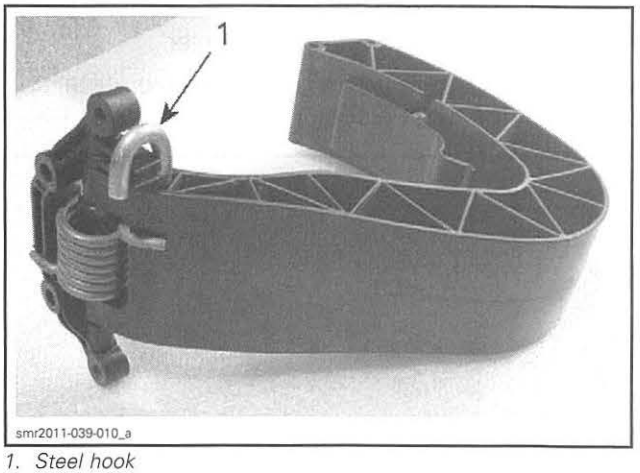

1. Steel hook

Tighten hinge retaining screws to specification as per the following sequence.

TIGHTENING TORQUE	
Storage compartment cover hinge screws	8.0 N•m (71 lbf•**in**)

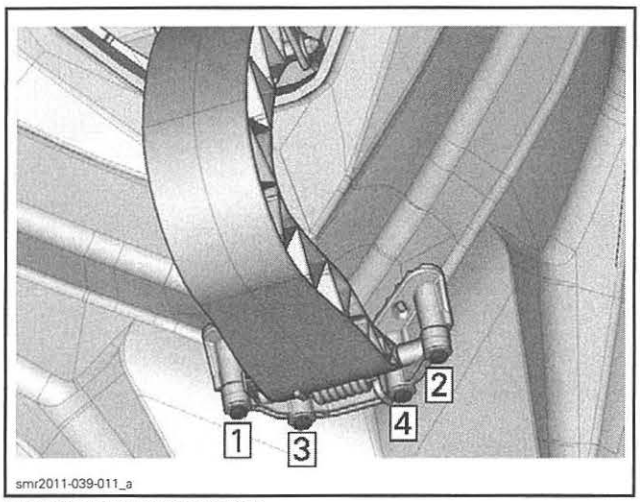

smr2011-039-011_a

TIGHTENING SEQUENCE

GAUGE TRIM

Gauge Trim Removal

1. Open storage compartment cover.
2. From underneath mirror, remove retaining screws on both sides.

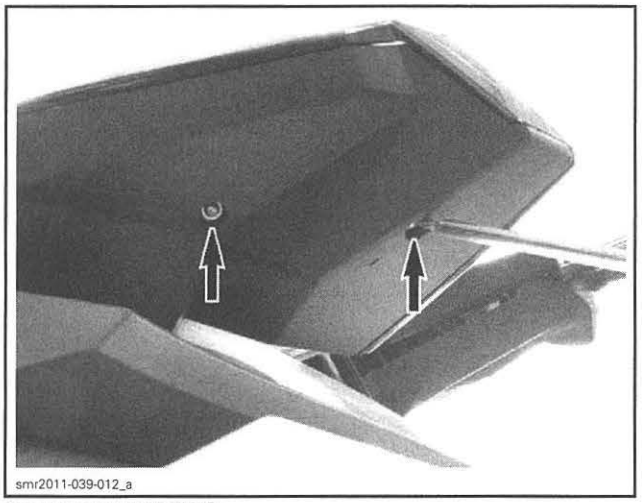
smr2011-039-012_a

RETAINING SCREWS

3. Hit with a sharp blow the front part of mirror toward the rear to unlock it.

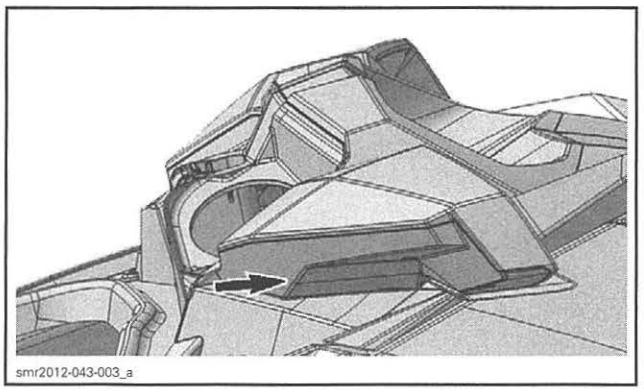
smr2012-043-003_a

4. Remove gauge trim from mirror support.

Gauge Trim Installation

The installation is the reverse of the removal procedure. However, pay attention to the following.

Prior to inserting gauge trim into mirror support, ensure that all tabs are properly aligned.

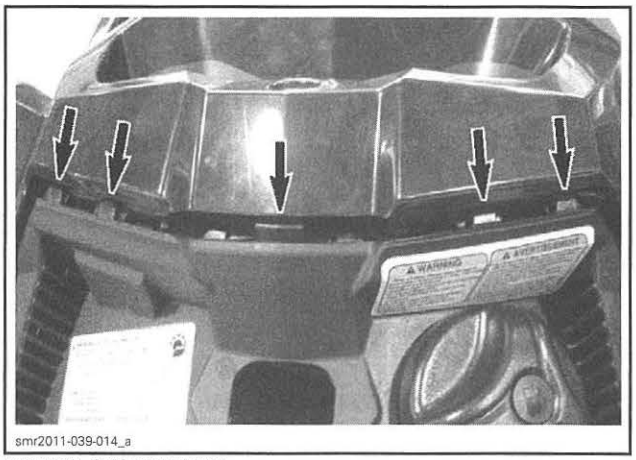
smr2011-039-014_a

TOP OF GAUGE TRIM

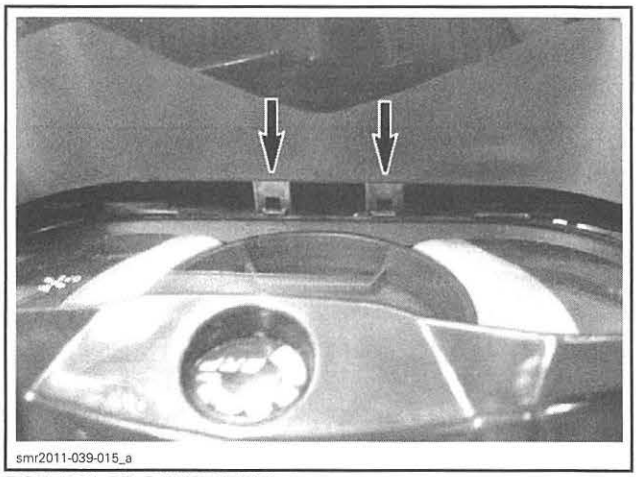
smr2011-039-015_a

BOTTOM OF GAUGE TRIM

LATERAL TRIM PANEL

Lateral Trim Panel Removal

1. Remove seat.
2. From inside storage compartment, remove screws securing lateral trim panel to deck.

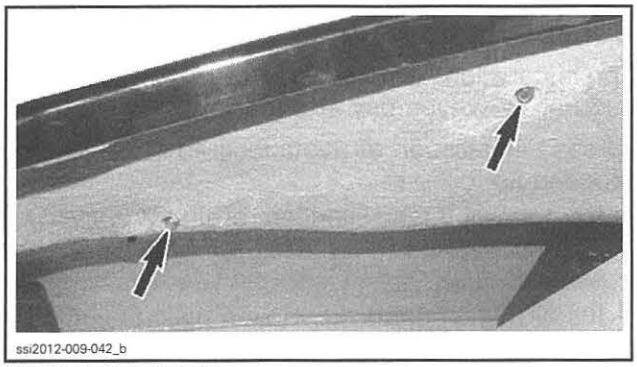

RETAINING SCREWS

3. From inside storage compartment, remove plastic rivet securing lateral trim panel to deck.
4. Remove plastic rivet and retaining screw securing the rear portion of lateral trim panel.

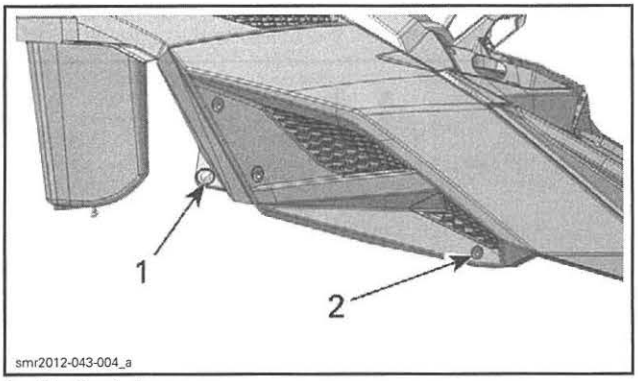

1. *Plastic rivet*
2. *Retaining screw*

5. Slide and rotate panel toward the front to unlock retaining tabs.

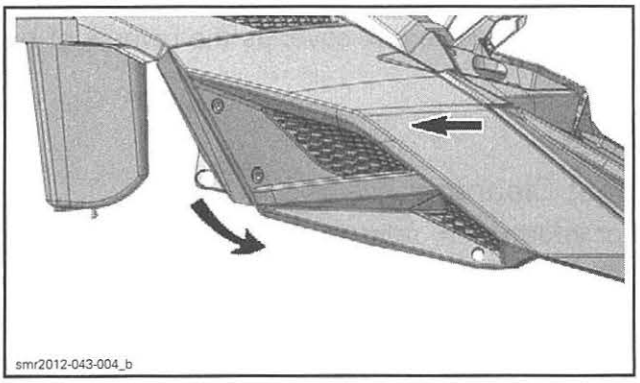

Lateral Trim Panel Installation

The installation is the reverse of the removal procedure. However, pay attention to the following.

Install **NEW** plastic rivets.

MIRROR SUPPORT

Mirror Support Removal

1. Proceed with *LATERAL TRIM PANEL REMOVAL*. See procedure in this subsection.
2. Proceed with *INFORMATION CENTER REMOVAL*. Refer to *INFORMATION CENTER (GAUGE)* subsection.
3. Remove steering column, refer to *STEERING AND O.T.A.S.* subsection.
4. Remove the following rivets securing mirror support to deck.

REQUIRED TOOL
SUPERTANIUM DRILL BIT 3/16" (P/N 529 031 800)

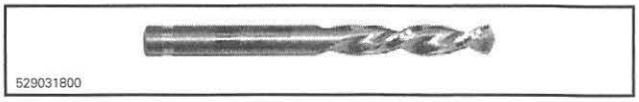

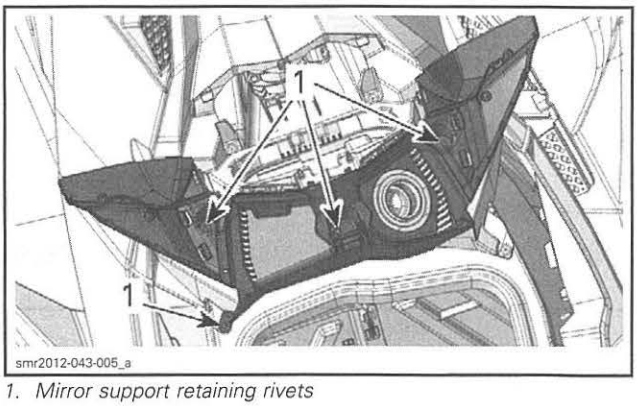

1. *Mirror support retaining rivets*

5. Remove fuel tank cap.
6. Place a **clean** cloth rag onto fuel tank tube.
7. Unlatch retaining tabs on both sides using a screwdriver.
8. Unlatch retaining tabs on the top using a screwdriver.
9. Remove mirror support by pulling it upwards.
10. Remove cloth rag and reinstall fuel tank cap.

⚠ WARNING

Fuel vapors are flammable and explosive under certain conditions. Unless otherwise noted, the fuel tank cap must always be installed on watercraft.

Mirror Support Installation

The installation is the reverse of the removal procedure. However, pay attention to the following.

Prior to inserting mirror support into console, ensure that all tabs are properly aligned.

Install rivets upside down with washers on mirror support top surface.

MIRRORS

Mirror Replacement

1. Proceed with *GAUGE TRIM REMOVAL*, see procedure in this subsection.
2. From inside gauge trim, slightly heat mirror.
3. Push at the back of mirror to remove it.
4. Properly clean gauge trim surface of any glue residue.
5. Install mirror using adhesive tape at the back of mirror.
6. Reinstall gauge trim as the reverse of removal.

CONSOLE

Console Removal

1. Proceed with *MIRROR SUPPORT REMOVAL*. See procedure in this subsection.
2. Remove *GLOVE BOX COVER*, see procedure in this subsection.
3. Remove the following rivets securing console to deck.

REQUIRED TOOL
SUPERTANIUM DRILL BIT 3/16" (P/N 529 031 800)

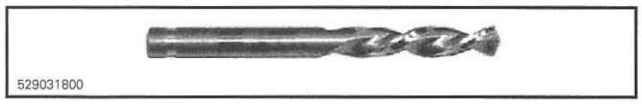

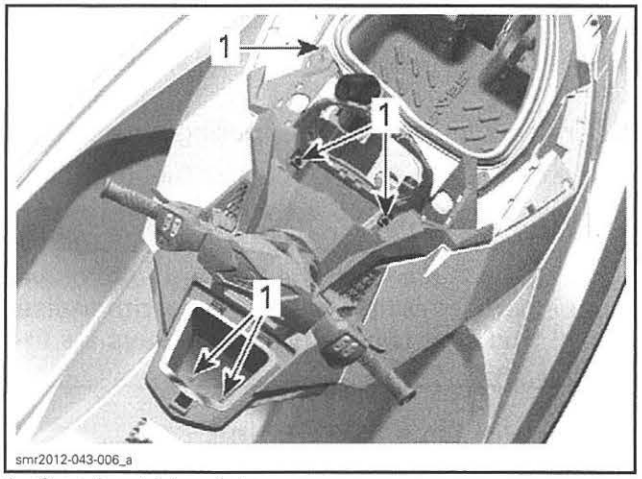

1. Console retaining rivets

4. Remove console by pulling it upwards.

Console Installation

The installation is the reverse of the removal procedure. However, pay attention to the following.

To ease installation of rivets located in glove box, proceed as follows:

- Remove air intake silencer, refer to *AIR INTAKE SYSTEM (EXCEPT iS AND aS MODELS)* subsection.
- Install rivets upside down with washers on console top surface.

GLOVE BOX COVER

Glove Box Cover Replacement

1. Open glove box cover.
2. Pull glove box cover upwards to release it from console hinge.



3. Reinstall glove box cover as the reverse of removal.

SEAT

Seat Cleaning

For information, refer to *BODY (RXT/GTX/WAKE PRO)* subsection.

SEAT LATCH

Seat Latch Adjustment

NOTE: Apply LOCTITE 243 (BLUE) (P/N 293 800 060) on threads of lock pin when the adjustment is required or when the lock pin is removed. If a new lock pin is used, it is already coat with a threadlocker.

1. Loosen adjustment nut.
2. Adjust lock pin height. Do not torque yet.

3. Position the lock pin longitudinally into the rear handle slot.

LOCK PIN POSITIONING	
MEASURE A	MEASURE B
24.0 mm ± 1.0 mm (.945 in ± .039 in)	30 mm ± 1.0 mm (1.181 in ± .039 in)

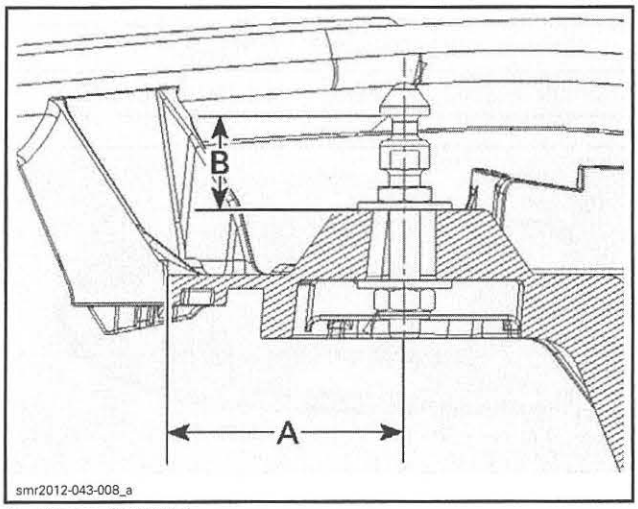

A. 76 mm (2.992 in)
B. 30.7 mm ± 1.0 mm (1.209 in ± .039 in)

4. Hold the lock pin in this position and tighten as per the following sequence.

SEAT LATCH TIGHTENING SEQUENCE		
STEP 1	Lock pin	9.5 N•m (84 lbf•**in**)
STEP 2	Adjustment nut	8.0 N•m (71 lbf•**in**)

5. Close the seat and readjust if required.

REAR HANDLE

Rear Handle Replacement

1. Remove seat.
2. Remove screws securing rear handle cover and remove rear handle cover.

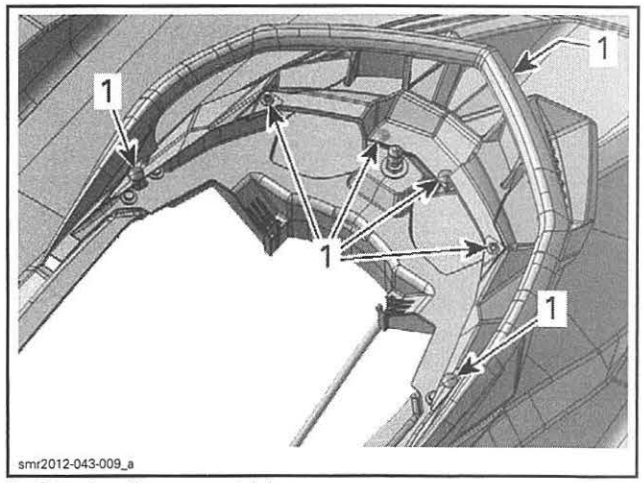

1. Rear handle cover retaining screws

3. Remove screws securing rear handle to deck.

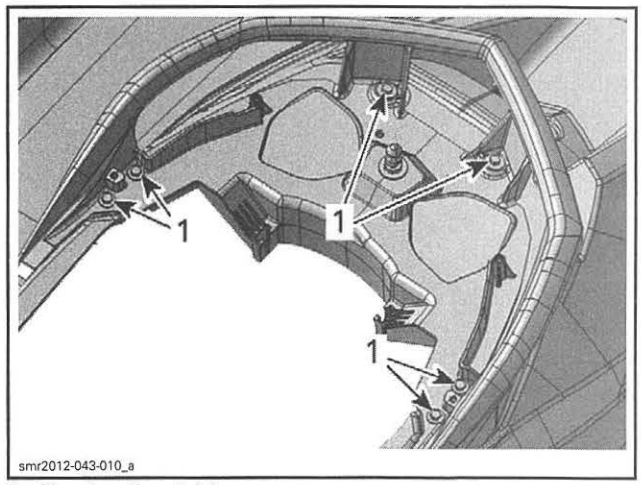

1. Rear handle retaining screws

4. Replace rear handle.
5. Tighten rear handle screws to specification.

TIGHTENING TORQUE	
Rear handle screws	8.0 N•m (71 lbf•**in**)

6. Reinstall rear handle cover.
7. Tighten rear handle screws to specification.

TIGHTENING TORQUE	
Rear handle screws	4.5 N•m (40 lbf•**in**)

BUMPER

Bumper Replacement

1. Remove screws securing front bumper.
2. Remove front bumper from deck.

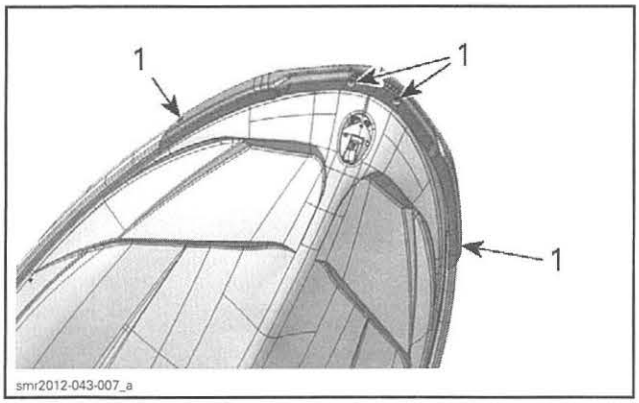

1. Front bumper retaining screws

3. Remove screws securing both rear corner bumpers.
4. Remove rear corner bumpers from deck.

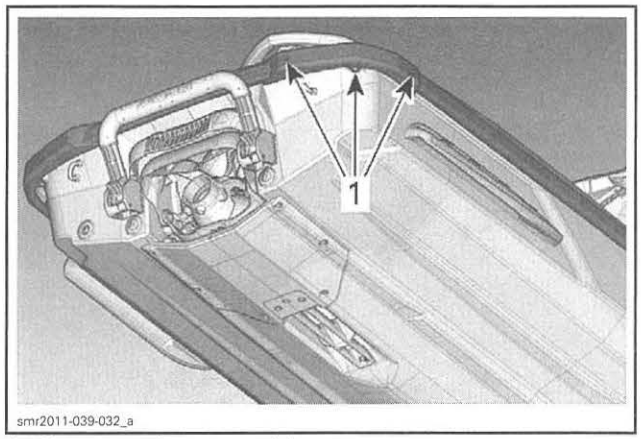

1. Rear corner bumper retaining screws

5. Slide side bumpers toward the rear to remove them from deck.
6. Slide rear bumper toward the side to remove it from deck.

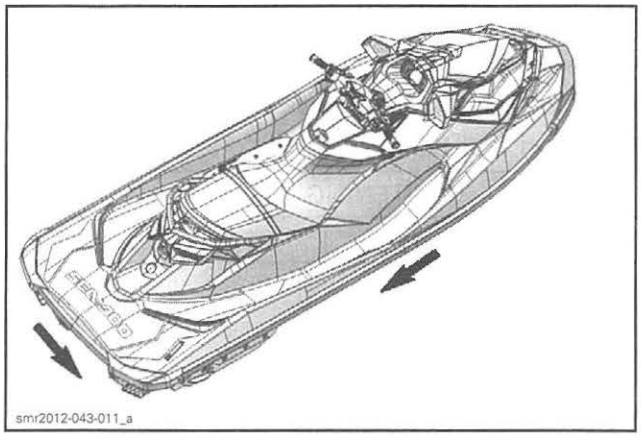

7. Install **new** bumpers as the reverse of removal.

NOTE: Use soapy water to ease bumper installation.

8. Tighten front bumper lower retaining screws to specification.

TIGHTENING TORQUE	
Front bumper **lower** screws	8.0 N•m (71 lbf•**in**)

9. Tighten bumper retaining screws to specification as per the following sequence.

TIGHTENING TORQUE	
Bumper retaining screws	4.5 N•m (40 lbf•**in**)

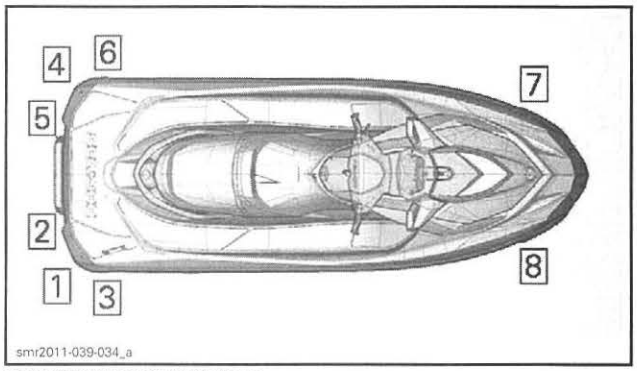

TIGHTENING SEQUENCE

VENTILATION DUCT

Ventilation Duct Replacement

1. Proceed with *LATERAL TRIM PANEL REMOVAL*. See procedure in this subsection.
2. Remove plastic rivet securing ventilation duct to housing.

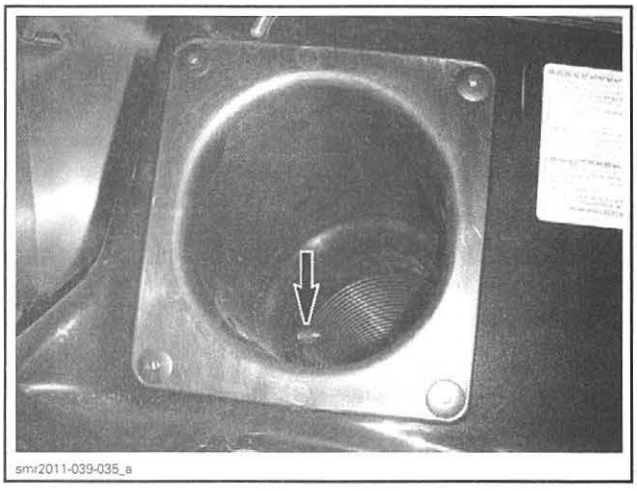

3. Remove the following rivets securing ventilation duct housing to deck.

REQUIRED TOOL
SUPERTANIUM DRILL BIT 3/16" (P/N 529 031 800)

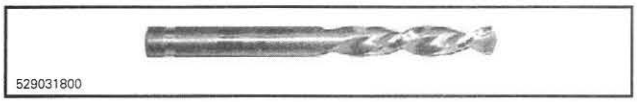

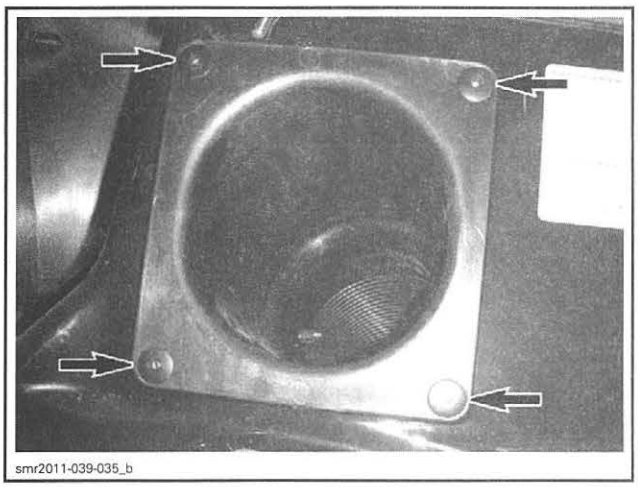

4. If applicable, remove locking tie securing wiring harness to ventilation duct.
5. Remove ventilation duct and its housing from watercraft.
6. Reinstall parts as the reverse of removal.

HULL (GTS/GTI/GTR/WAKE/RXP)

SERVICE PRODUCTS

Description	Part Number	Page
BRP HEAVY DUTY CLEANER	293 110 001	685–687
LOCTITE 5150 (SILICONE SEALANT)	296 000 309	687–689, 692
LOCTITE 5900	293 800 066	685–687, 689

GTS, GTI, GTR and WAKE Series

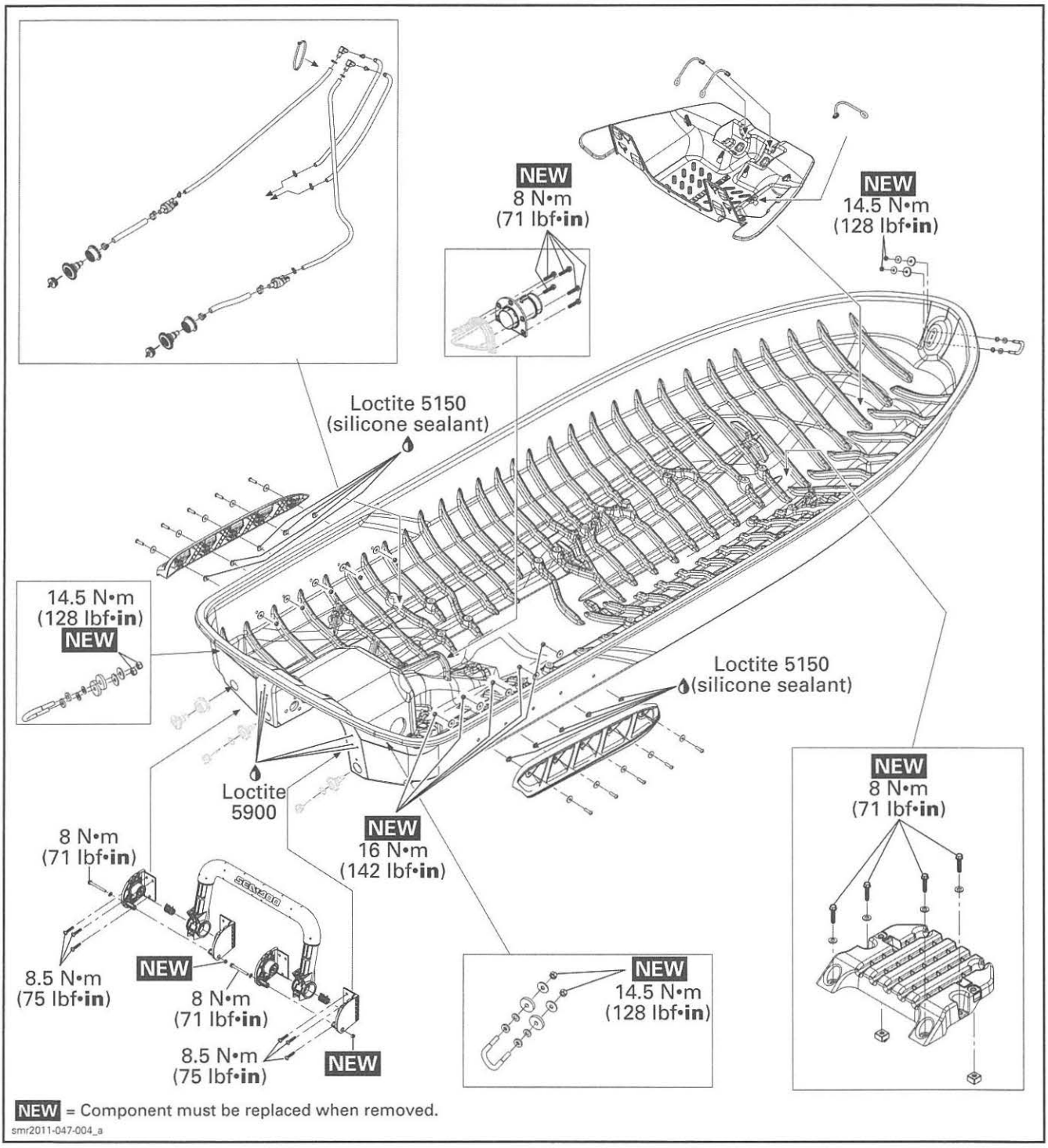

RXP-X Series

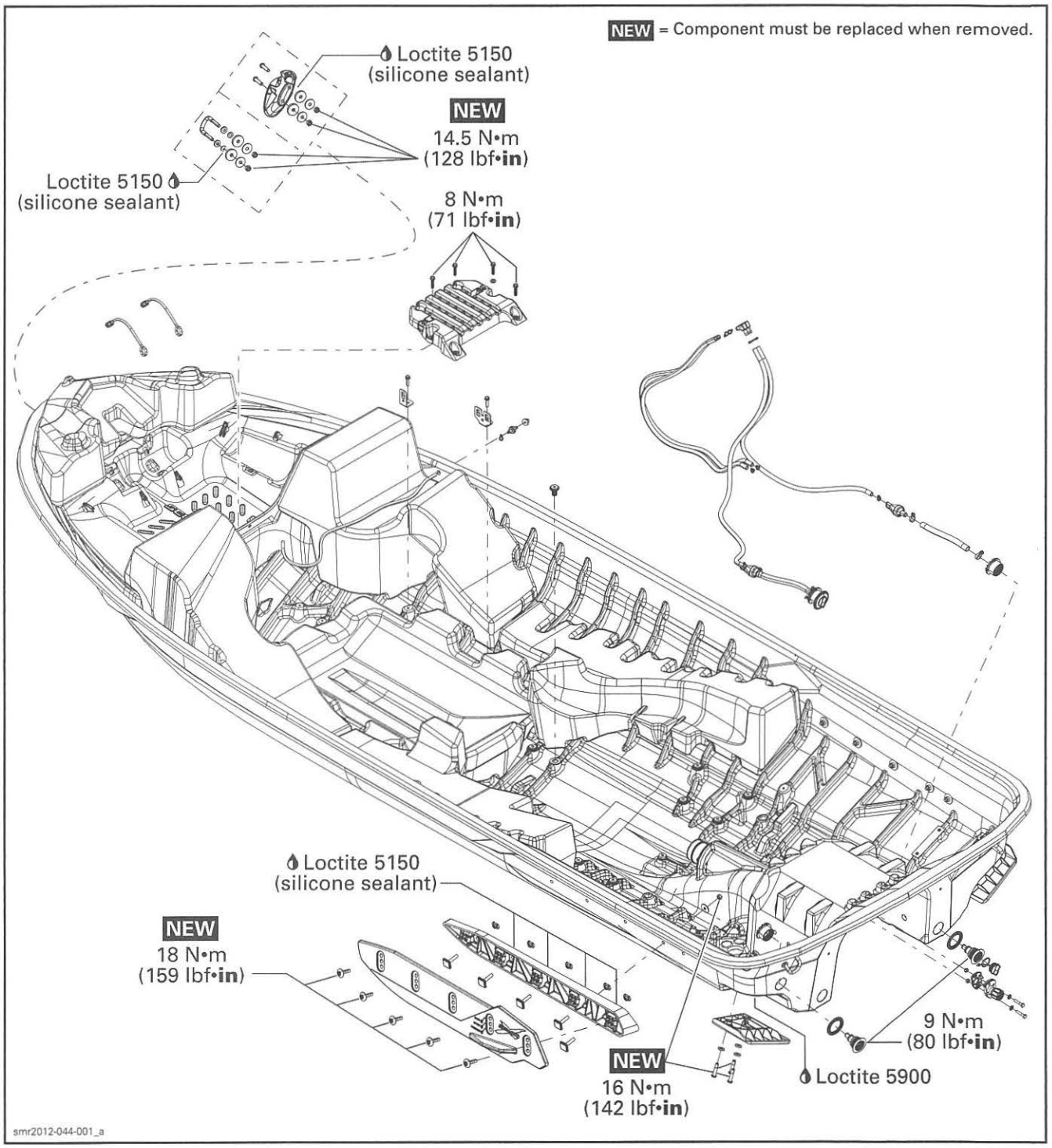
NEW = Component must be replaced when removed.
Loctite 5150
(silicone sealant)
NEW
14.5 N•m
(128 lbf•in)
Loctite 5150
(silicone sealant)
8 N•m
(71 lbf•in)
Loctite 5150
(silicone sealant)
NEW
18 N•m
(159 lbf•in)
NEW
16 N•m
(142 lbf•in)
9 N•m
(80 lbf•in)
Loctite 5900
smr2012-044-001_a

All Models

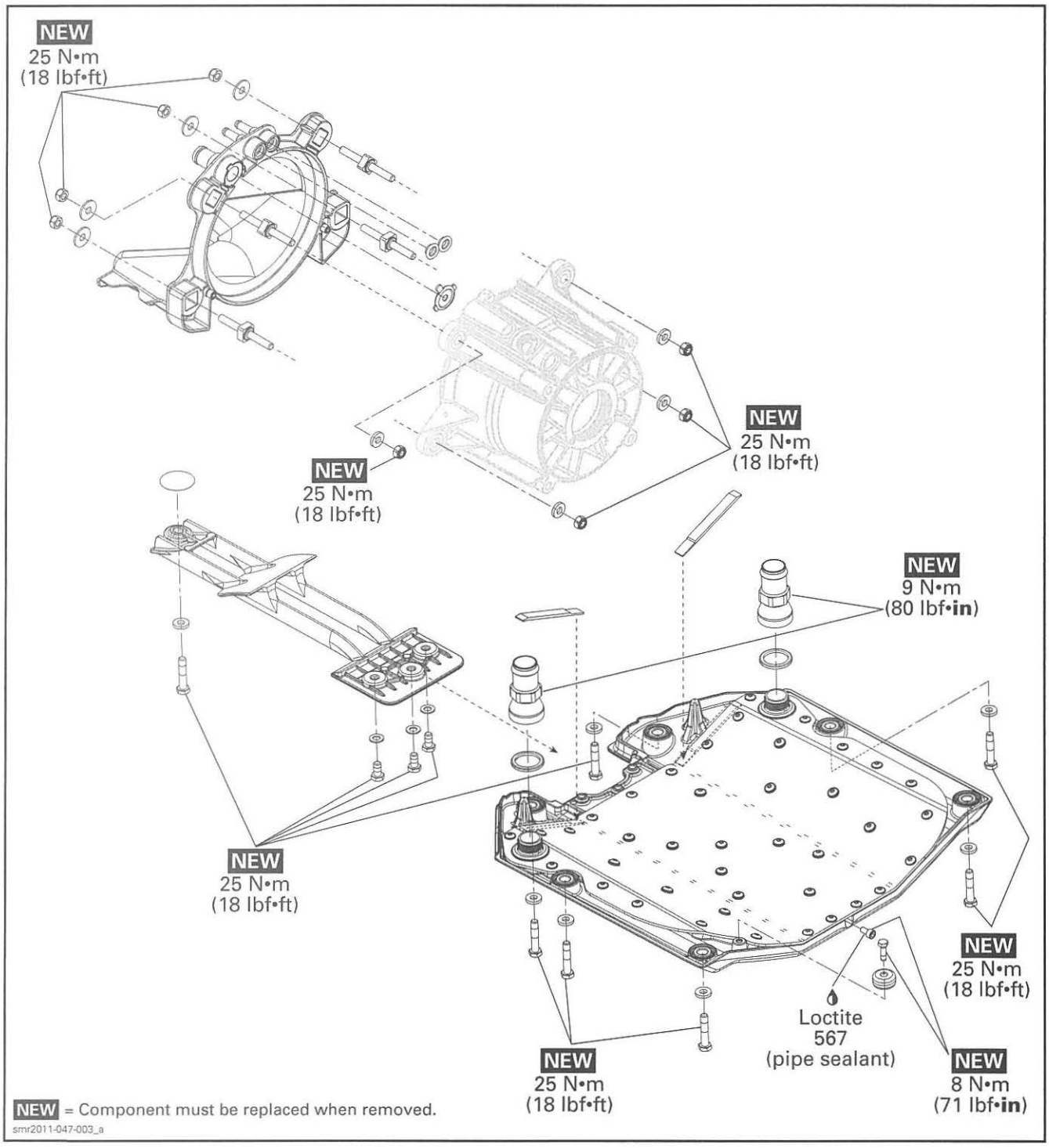
NEW
25 N•m
(18 lbf•ft)
NEW
25 N•m
(18 lbf•ft)
NEW
25 N•m
(18 lbf•ft)
NEW
9 N•m
(80 lbf•in)
NEW
25 N•m
(18 lbf•ft)
NEW
25 N•m
(18 lbf•ft)
Loctite
567
(pipe sealant)
NEW
25 N•m
(18 lbf•ft)
NEW
8 N•m
(71 lbf•in)
NEW = Component must be replaced when removed.
smr2011-047-003_a

PROCEDURES

HULL

Hull Repair

The repair procedures of the hull is not the same as a fiberglass composite hull and deck. The standard polyester based fiberglass repair kits **will not work** with this type of hull. The polyester will not adhere to the hull material. Only two-part epoxy repair material should be used.

To repair a hull, the use of an Epoxy repair system, such as the WEST SYSTEM® or equivalent epoxy, is mandatory.

However, the finish on the [3] hull is a polyester based gelcoat with a bonding layer between the hull and the gelcoat. Standard gelcoat refinishing can be performed if the damage is limited to the color surface. If damage requires the removal or the repair to structure material, the epoxy may also be used as a barrier coat before refinishing with gelcoat. Epoxy adheres to hull material, and gelcoat adheres to epoxy.

An epoxy repair kit can be purchased directly from WEST SYSTEM.

Go to **www.westsystem.com**.

On this site you will find complete repair instructions, click on HOW TO USE.

Also training videos, tools and several products are available on the web site.

Consumer Assistance

North and South America
WEST SYSTEM 102 Patterson Ave. P.O. Box 665 Bay City, MI 48707-0665 Phone: 989 684-7286 Toll free: 866 937-8797 Fax: 989 684-1374
Europe, Middle East, Africa and Asia
WESSEX RESINS AND ADHESIVES LIMITED Cupernham House, Cupernham Lane, Romsey England SO51 7LF Phone: 44-1-794-521-111 Fax: 44-1-794-517-779 E-mail: info@wessex-resins.com
Australia, South Pacific and Asia
ATL COMPOSITES P.O. Box 2349/Southport 4215 Queensland, Australia Tel.: +61 7-5563-1222, Fax: +61 7-5563-1585 E-mail: info@atlcomposites.com
New Zealand, South Pacific and Asia
ADHESIVE TECHNOLOGIES LTD. 17 Corbans Ave./Box 21-169, Henderson Auckland, New Zealand Phone: 64-9-838-6961 Fax: 64-9-836-4849 E-mail: enquiries@adhesivetechnologies.co.nz

INLET GRATE

Inlet Grate Removal

1. Remove inlet grate retaining screws using an impact tool. Discard screws.

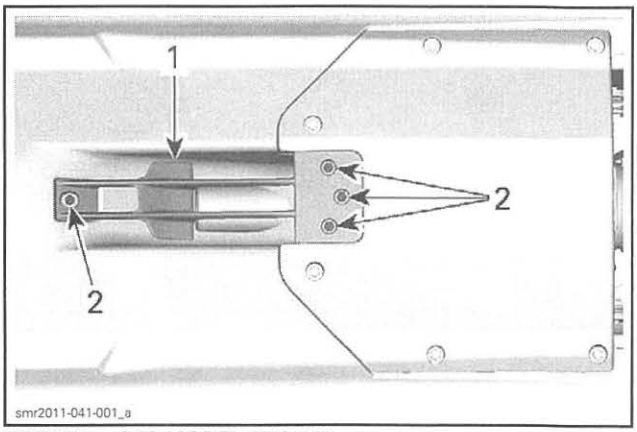

TYPICAL – GTS MODEL SHOWN
1. Inlet grate
2. Inlet grate screws

2. Remove inlet grate.

Inlet Grate Installation

1. Install **NEW** inlet grate retaining screws at the proper location.

INLET GRATE SCREWS		
LOCATION	MODEL	SCREW SIZE
Front	All	M8 x 40
Rear	RXP-X Series	M8 x 20
	GTS, GTI, GTR and WAKE 155	M8 x 16

WEST SYSTEM is a registered trademark of Gougeon Brother, Inc

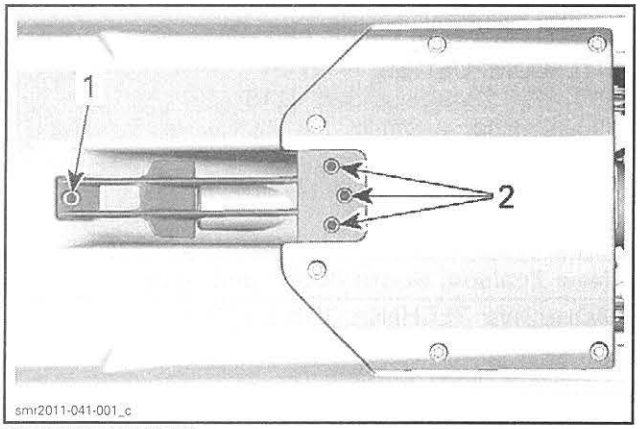

SCREW LOCATION
1. *Front*
2. *Rear*

2. Tighten screws to the specified torque and sequence.

TIGHTENING TORQUE		
INLET GRATE SCREWS	First step	Hand tighten
	Second step	25 N•m (18 lbf•ft)

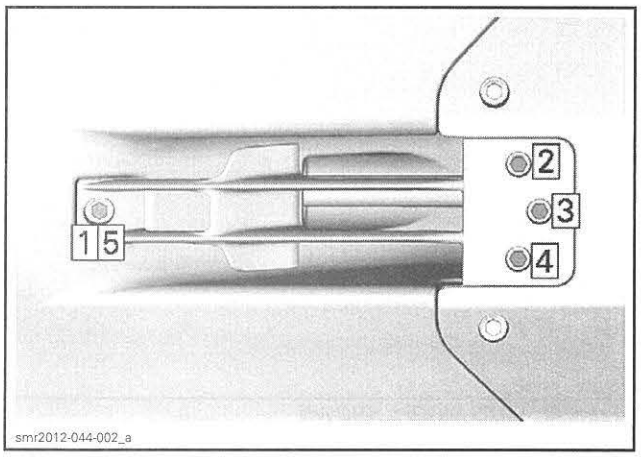

TIGHTENING TORQUE SEQUENCE

RIDE PLATE

Ride Plate Removal

1. Remove inlet grate, see procedure in this subsection.
2. Remove jet pump. Refer to *JET PUMP*.
3. Drain cooling system. Refer to *COOLING SYSTEM*.
4. From inside the hull, disconnect coolant hoses from the ride plate.
5. Remove coolant hose fittings from the ride plate.

NOTICE If possible, remove the hose fittings from the ride plate before removing the ride plate. If fittings cannot be removed, proceed with care when removing the ride plate.

6. Heat ride plate retaining screws using a heat gun.
7. Using an impact tool, remove and discard retaining screws.

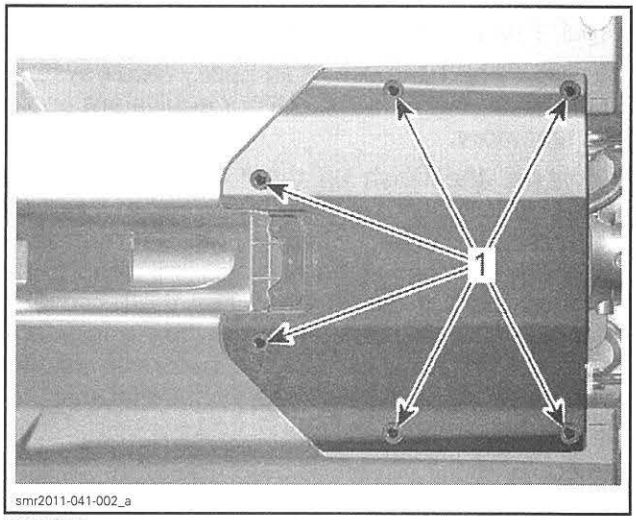

TYPICAL
1. *Ride plate retaining screws*

8. Install a low height hydraulic bottle jack and 2 steel plates between ride plate and hull as per following illustration.

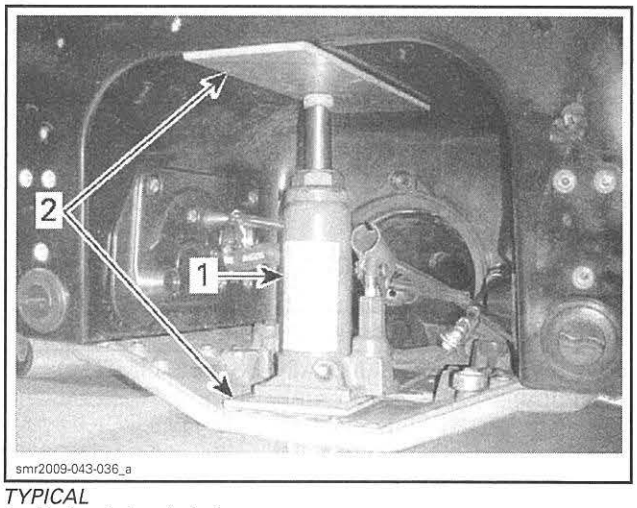

TYPICAL
1. *Hydraulic bottle jack*
2. *Steel plates*

9. Heat the edge of the ride plate with a heat gun to soften the sealant.
10. Start pumping the hydraulic jack slowly.
11. Using a sharp knife, carefully cut the sealant around the ride plate edges.

12. Pump the hydraulic jack slowly to pry the ride plate from the hull.

Ride Plate Cleaning

1. Carefully scrape off all excess sealant from ride plate and hull.
2. Clean hull surface with BRP HEAVY DUTY CLEANER (P/N 293 110 001) to eliminate grease, dust and sealant residue. Clean fitting threads.

Ride Plate Installation

1. Apply LOCTITE 5900 (P/N 293 800 066) sealant as illustrated.

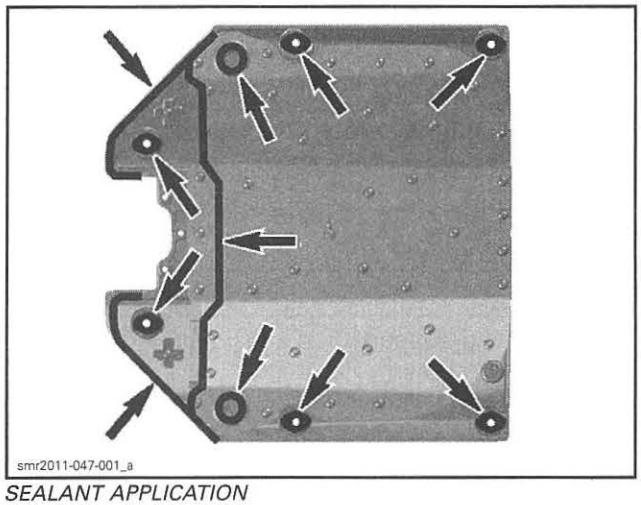

SEALANT APPLICATION

2. Install both hose fittings on the ride plate. Tighten to the specified torque.

TIGHTENING TORQUE	
Hose fittings	9 N•m (80 lbf•**in**)

3. Position ride plate on hull and thread **NEW** screws 5 turns by hand.
4. Position inlet grate and thread **NEW** screws 5 turns by hand. Refer to *INLET GRATE* in this subsection.
5. Tighten screws to the specified torque and sequence.

TIGHTENING TORQUE	
Ride plate retaining screws	25 N•m (18 lbf•ft)

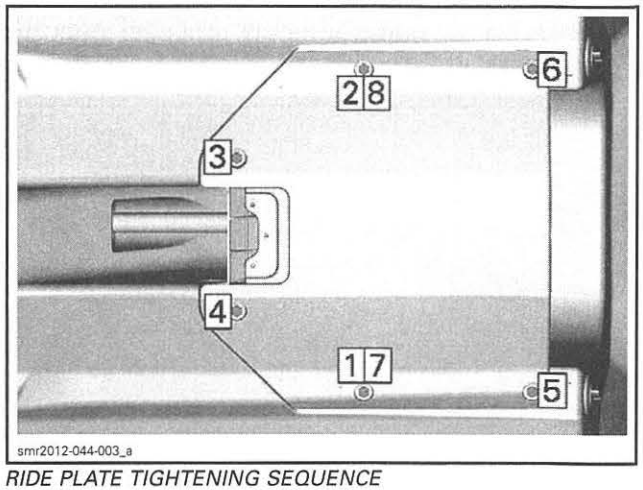

RIDE PLATE TIGHTENING SEQUENCE

6. Tighten inlet grate screws to the specified torque and sequence, refer to *INLET GRATE INSTALLATION* in this subsection.
7. Reinstall coolant hoses on ride plate fittings.

NOTICE **Make sure the coolant hose clamp screws do not rub on any component.**

8. Fill and bleed cooling system and carry out a leak test. Refer to *COOLING SYSTEM* subsection.
9. Install all remaining parts. Refer to the applicable procedures.

JET PUMP SUPPORT

Jet Pump Support Removal

1. Remove the following parts:
   - Jet pump (refer to *JET PUMP* subsection)
   - Drive shaft (refer to *DRIVE SHAFT* subsection)
   - Ride plate (refer to *RIDE PLATE* in this subsection.
2. Disconnect hoses from jet pump support.

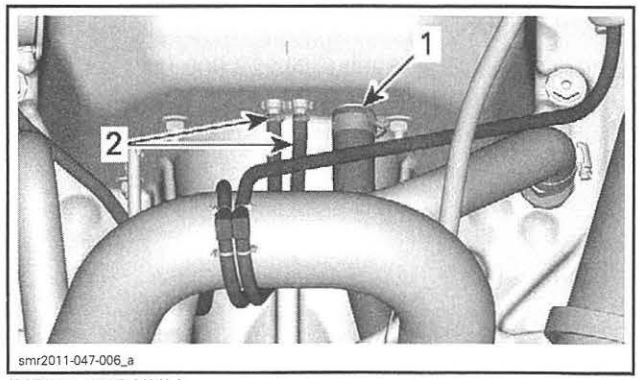

INSIDE THE HULL
1. *Exhaust water supply hose*
2. *Bailer hoses*

3. Remove jet pump support retaining nuts and washers.

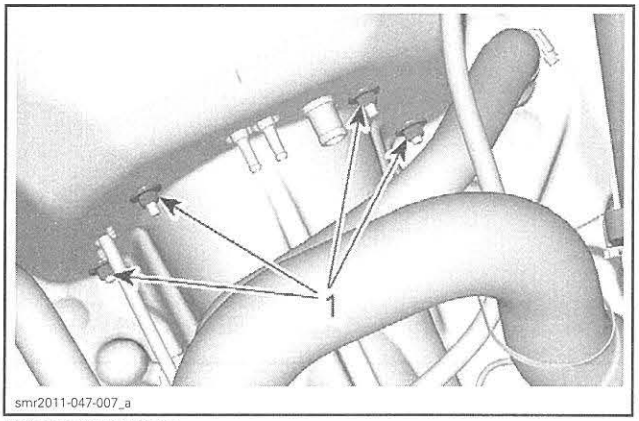

INSIDE THE HULL
1. Jet pump support retaining nuts

4. Heat the jet pump support using a heat gun in order to soften the sealant.
5. Pull jet pump support off the hull.
6. Note the alignment shims location.

NOTICE **Alignment shims have to be reinstalled at the same location.**

Jet Pump Support Cleaning

1. Scrape off all excess sealant from jet pump support, ride plate, and hull.
2. Inspect pump support for cracks or other damage.
3. Clean jet pump support and hull surface with BRP HEAVY DUTY CLEANER (P/N 293 110 001) to eliminate grease, dust, and sealant residue.

Jet Pump Support Installation

1. Make sure sealant contact areas are clean and dry.

NOTE: If a new jet pump support is installed, perform a flame treat to increase the adhesion of the Loctite 5900.

2. Apply LOCTITE 5900 (P/N 293 800 066) on the jet pump support as shown (thick black line).

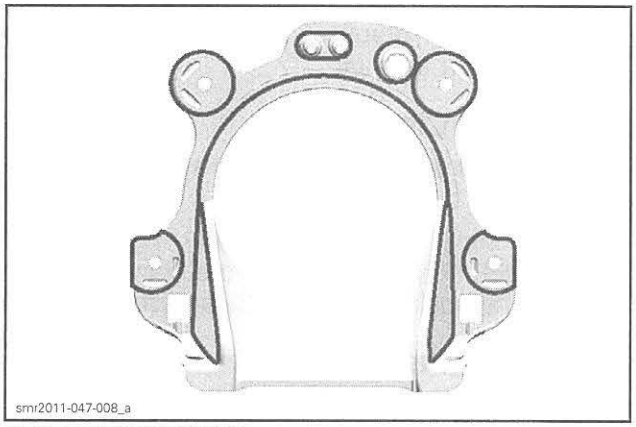

SEALANT APPLICATION

3. Insert the studs in the jet pump support square holes.
4. Slide the alignment shims on the studs.
5. Position the jet pump support against the hull.
6. Inside the hull, thread all 4 retaining nuts.
7. Tighten retaining nuts to the specified torque and sequence.

TIGHTENING TORQUE	
Jet pump support retaining nuts	25 N•m (18 lbf•ft)

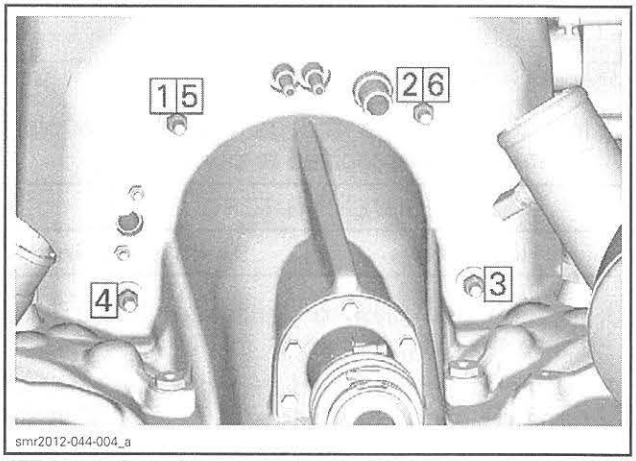

JET PUMP SUPPORT TIGHTENING SEQUENCE

8. Remove excess sealant.
9. Reinstall other removed parts. Refer to appropriate subsections for procedures.

THRU-HULL FITTING

Thru-Hull Fitting Removal

1. Remove drive shaft, refer to *DRIVE SHAFT* subsection.
2. Remove the thru-hull fitting retaining screws.

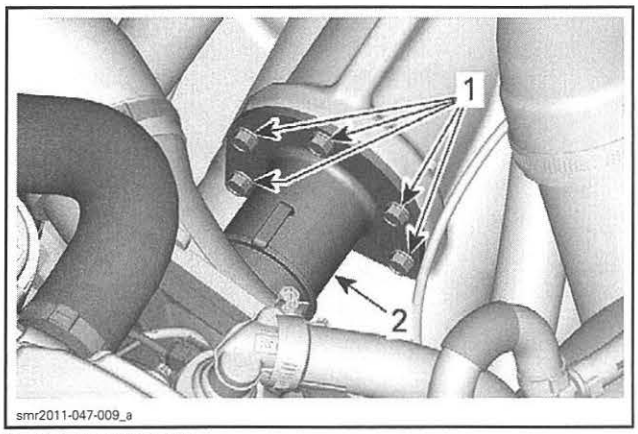

1. Retaining screws
2. Thru-hull fitting

3. Heat the thru-hull fitting with a heat gun to soften the sealer.
4. Pull thru-hull fitting off the hull.

Thru-Hull Fitting Area Cleaning

1. Scrape off all excess sealant from the hull.
2. Clean hull surface with BRP HEAVY DUTY CLEANER (P/N 293 110 001) to eliminate grease, dust, and sealant residue.

NOTE: Use only a clean, dry, oil free filtered air supply for dusting and drying parts or hull.

Thru-Hull Fitting Installation

1. Make sure thru-hull fitting sealing surface is free of sealant residue, clean and dry before installation.
2. Apply LOCTITE 5900 (P/N 293 800 066) sealant as illustrated.

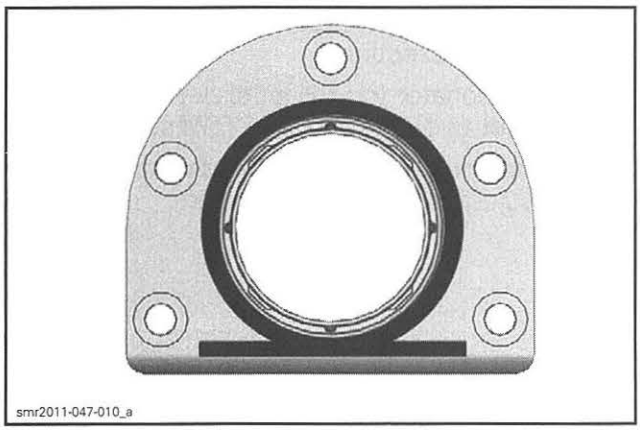

SEALANT APPLICATION

3. Tighten screws to the specified torque and sequence.

TIGHTENING TORQUE	
Thru-hull fitting retaining screws	8 N•m (71 lbf•**in**)

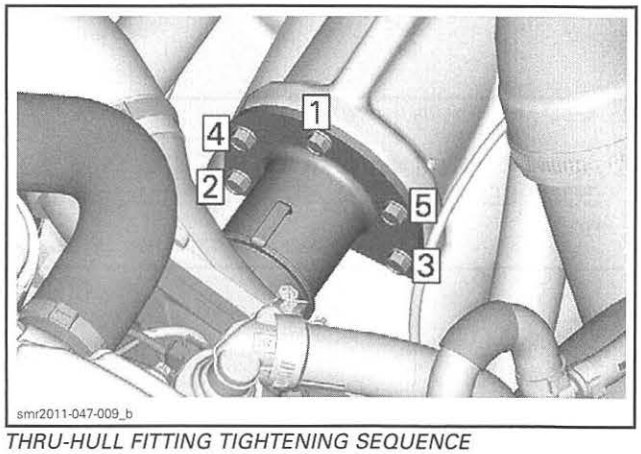

THRU-HULL FITTING TIGHTENING SEQUENCE

4. Install other removed parts, refer to the appropriate subsections.

FIXED REAR SPONSONS (EXCEPT RXP-X SERIES)

NOTE: Removal and installation procedure for RH and LH sponson is similar.

Fixed Rear Sponson Removal

Remove resonator (on RH side) or muffler (on LH side). Refer to *EXHAUST SYSTEM* subsection.

From inside hull, hold sponson nuts while removing sponson retaining bolts and washers.

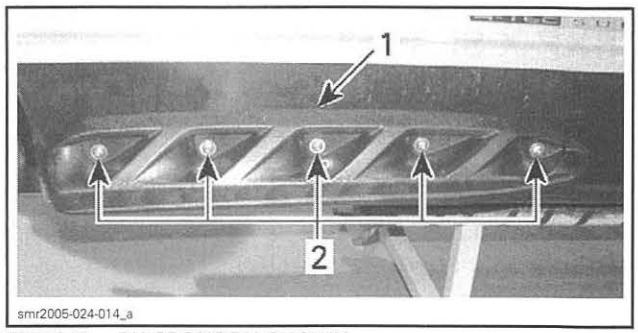

TYPICAL – RH SPONSON SHOWN
1. Sponson
2. Retaining bolts

Fixed Rear Sponson Installation

1. Clean any residues of silicone sealant on hull and sponsons.
2. Apply LOCTITE 5150 (SILICONE SEALANT) (P/N 296 000 309) on back side of sponson spacers.

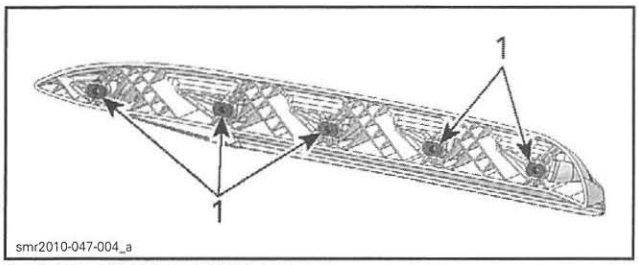

1. Apply silicone sealant here

3. Apply a small amount of LOCTITE 5150 (SILICONE SEALANT) (P/N 296 000 309) into each hull hole.

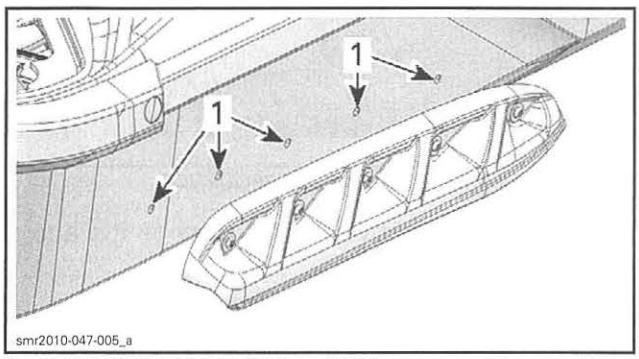

1. Apply silicone sealant in these holes

4. Insert a bolt with washer through each hole and install the sponson against the hull.
5. From inside hull, secure each bolt with a washer and a NEW elastic stop nut.
6. Tighten nuts as specified in the exploded view.
7. Reinstall resonator. Refer to *EXHAUST SYSTEM* for the procedure.

ADJUSTABLE REAR SPONSONS (RXP-X SERIES)

NOTE: The following procedures apply for RH and LH sides.

Adjustable Rear Sponson Removal

Remove and discard all screws securing adjustable sponsons.

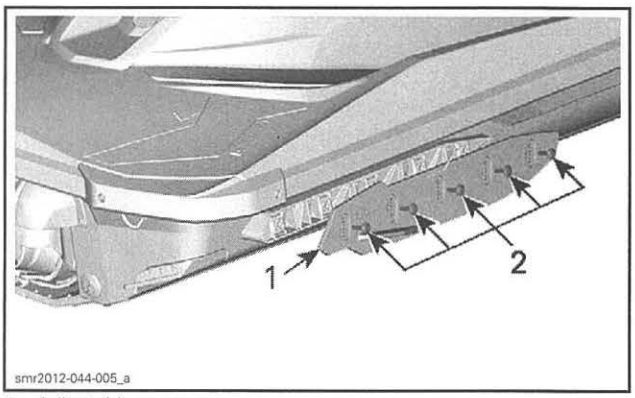

1. Adjustable sponson
2. Retaining screws

Adjustable Rear Sponson Installation

⚠ WARNING

Both sponsons must be installed and adjusted at the same height. Missing sponsons or improper adjustment will affect handling and stability, which could cause a loss of control of the watercraft.

TIGHTENING TORQUE	
Sponson retaining screws	18 N•m (159 lbf•**in**)

ADJUSTABLE SPONSON SUPPORTS (RXP-X SERIES)

NOTE: Removal and installation procedure for RH and LH sponson is similar.

Adjustable Sponson Support Removal

Remove the *ADJUSTABLE SPONSON*, see procedure in this subsection.

Remove resonator (on RH side) or muffler (on LH side). Refer to *EXHAUST SYSTEM* subsection.

From inside hull, remove nuts and washers retaining the adjustable sponson support.

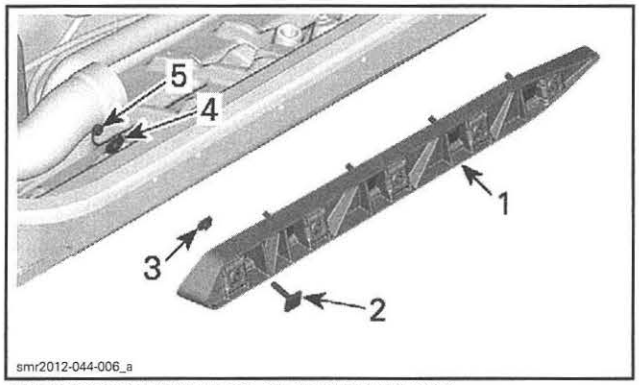

BODY NOT SHOWN FOR CLARITY PURPOSE
1. *Sponson support*
2. *Square head stud*
3. *Push nut*
4. *Washer*
5. *Elastic stop nut*

Adjustable Sponson Support Installation

The installation is the reverse of the removal procedure. However, pay attention to the following.

REQUIRED PRODUCT	LOCATION
LOCTITE 5150 (SILICONE SEALANT) (P/N 296 000 309)	Around each hole of sponson support

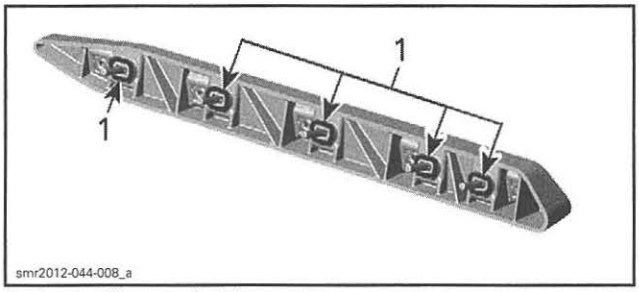

1. *Apply silicon sealant here*

TIGHTENING TORQUE	
Sponson support nuts (NEW)	16 N•m (142 lbf•**in**)

Reinstall adjustable sponson as described in *ADJUSTABLE SPONSON INSTALLATION.*

FIXED TRIM TABS (RXP-X SERIES)

NOTE: The following procedures apply to RH and LH sides.

Fixed Trim Tab Removal

Remove screws securing the fixed trim tab.

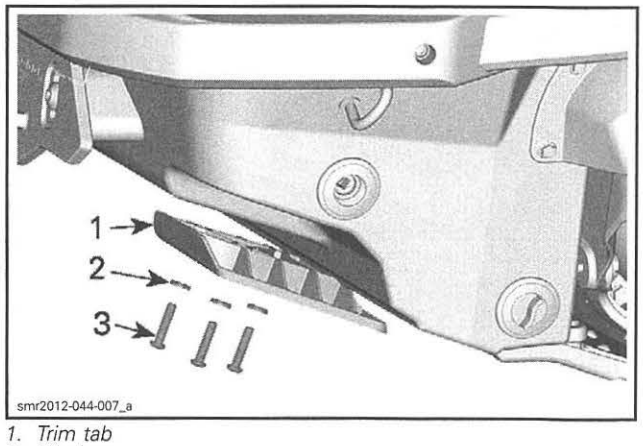

1. *Trim tab*
2. *Washer*
3. *Trim tab retaining screws*

Fixed Trim Tab Installation

REQUIRED PRODUCT	LOCATION
LOCTITE 5900 (P/N 293 800 066)	Inside each hole of the hull

TIGHTENING TORQUE	
Fixed trim tab retaining screws	16 N•m (142 lbf•**in**)

BAILERS

Two bailer pick ups (one each side), draw water from the bilge when watercraft is in operation.

The bailer pick ups are connected to syphon tubes mounted in the jet pump venturi that use the jet pump thrust to create a vacuum. The bailers are also connected to the bilge drain plugs in the stern.

Bailer Pick-Up Location

Port side (LH): underneath the iBR actuator (if equipped).

Starboard side (RH): underneath the rear exhaust hose.

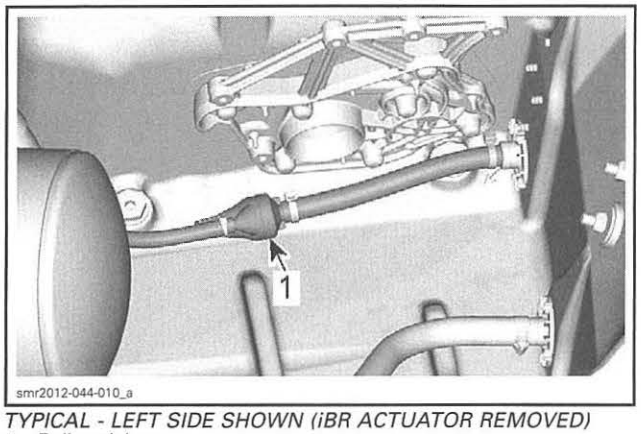

TYPICAL - LEFT SIDE SHOWN (iBR ACTUATOR REMOVED)
1. Bailer pick-up

Bailer Pick-Up Inspection

1. Check holes in the bailer pick-ups to see if they are obstructed. Clean if necessary.
2. Check if the hole on each bailer hose elbow fitting is obstructed. Clean elbow fittings if necessary.

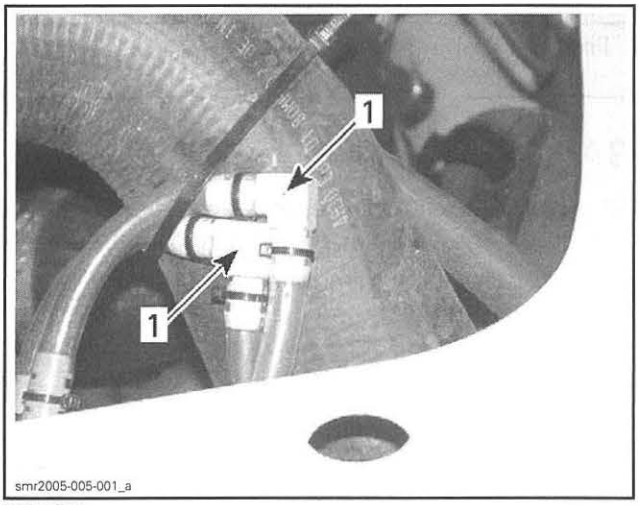

TYPICAL
1. Elbow fitting holes

NOTE: When repositioning the bailer hose elbows, attach them at the highest available point on the exhaust hose.

DRAIN PLUGS

NOTE: Each drain plug on the stern are each connected to a bailer. When watercraft is off the water, the drain plugs can be removed to manually drain the bilge.

Drain Plug Neck Location

Port side (LH): behind the iBR actuator (if equipped).

Starboard side (RH): behind the rear exhaust hose.

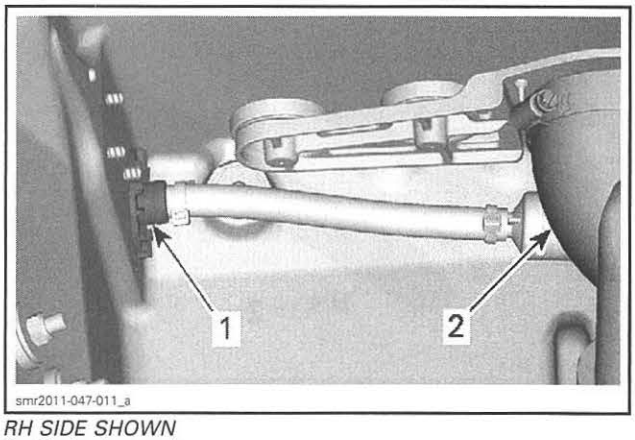

RH SIDE SHOWN
1. Drain plug neck
2. Rear exhaust hose

Drain Plug Neck Removal

1. Cut locking tie securing bailer hose to the drain plug assembly.

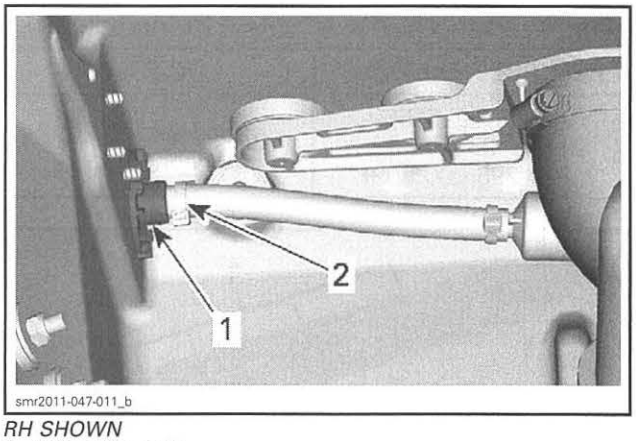

RH SHOWN
1. Drain plug neck
2. Locking tie

2. Unscrew the drain plug from the drain neck and pull the drain plug out of the neck.

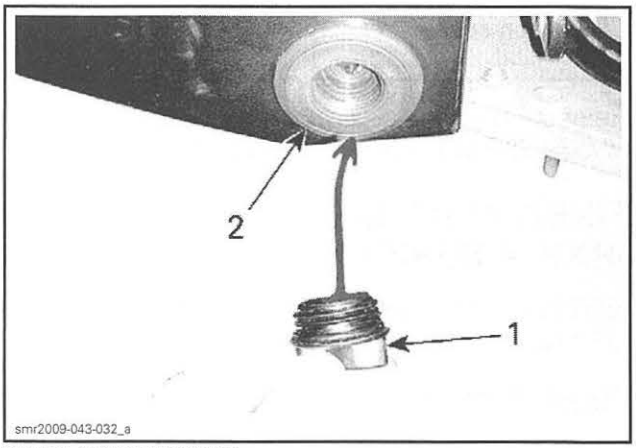

DRAIN PLUG REMOVAL
1. Drain plug
2. Drain neck

3. Inside the hull, hold drain neck nut using adjustable pliers.
4. Insert a ratchet extension in the square hole, then unscrew the drain neck from the hull.

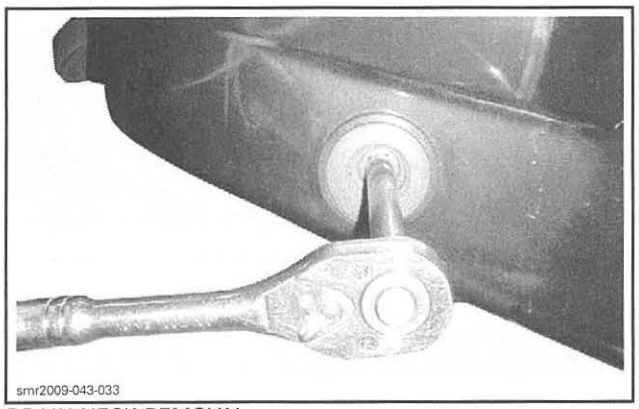

DRAIN NECK REMOVAL

Drain Plug Neck Installation

1. Install drain neck and torque to 9 N•m (80 lbf•**in**).
2. Secure bailer hose to drain neck using a NEW locking tie.
3. Reinstall all removed parts in the reverse order of removal.

iCATCH BOW CUP (GTI LIMITED 155 AND RXP-X)

iCATCH Bow Cup Access

Open the front storage compartment cover.

iCATCH Bow Cup Removal

Remove the following fasteners retaining the iCATCH bow cup:

- Allen screws
- Rubber washers
- Stainless steel flat washers
- Elastic stop nuts (discard them).

iCATCH Bow Cup Installation

The installation is the reverse of the removal procedure. However, pay attention to the following.

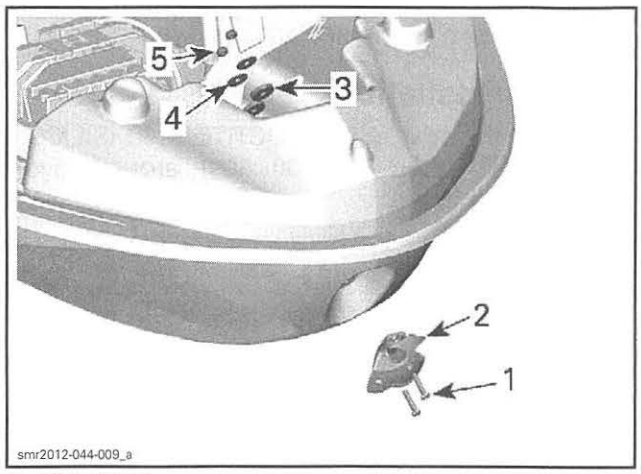

1. *Allen screw*
2. *iCATCH bow cup*
3. *Rubber washer*
4. *Stainless steel flat washer*
5. *Elastic stop nut*

TIGHTENING TORQUE	
iCATCH bow cup nuts	14.5 N•m (128 lbf•**in**)

BOW AND STERN EYELETS

Bow Eyelet Access

Open the front storage cover.

Stern Eyelet Access

Remove seat.

Eyelet Removal

1. Unscrew and discard both bow eyelet retaining nuts.

NOTE: Keep all washers for installation. Bow and stern eyelets have the same hardware layout.

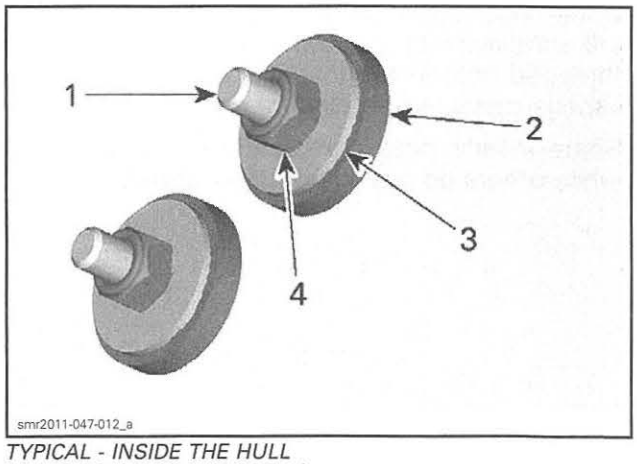

TYPICAL - INSIDE THE HULL

1. *Threaded portion of the eyelet*
2. *Rubber washer*
3. *Large stainless steel washer*
4. *Elastic stop nut*

2. Pull eyelet off the hull.

3. Clean any silicone sealant residue.

Eyelet Installation

1. Inside the hull, apply LOCTITE 5150 (SILICONE SEALANT) (P/N 296 000 309) around eyelet mounting holes.
2. Position eyelet and hardware as illustrated. Use **NEW** elastic stop nuts.

NOTE: Bow and stern eyelets have the same hardware layout.

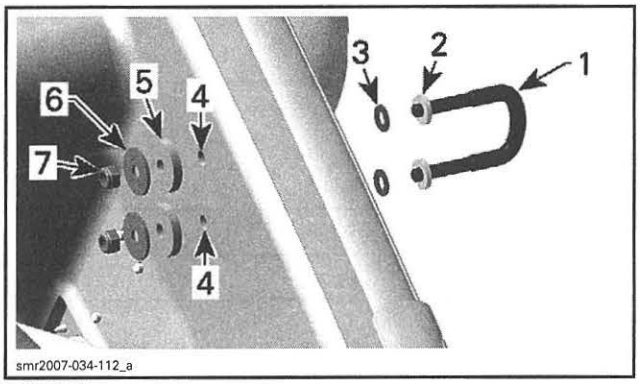

TYPICAL
1. *Eyelet*
2. *Small stainless steel washer*
3. *Nylon washer*
4. *Loctite 5150 (silicone sealant) here*
5. *Rubber washer*
6. *Large stainless steel washer*
7. *Elastic stop nut*

3. Tighten nuts to the specified torque.

TIGHTENING TORQUE	
Eyelet retaining nuts	14.5 N•m (128 lbf•**in**)

HULL INSERTS

Metal inserts (brass) of various types and sizes are screwed into the hull at various locations. A threaded hole in the insert is used for fastening various parts and equipment onto the hull.

Some inserts pass completely through the hull, while others do not (blind hole inserts).

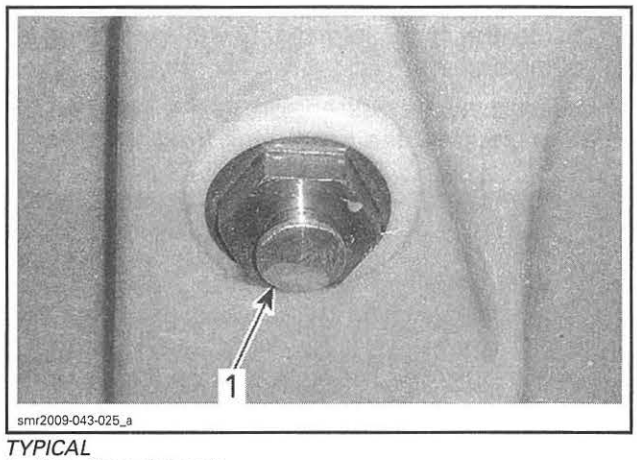

TYPICAL
1. *Pass through insert*

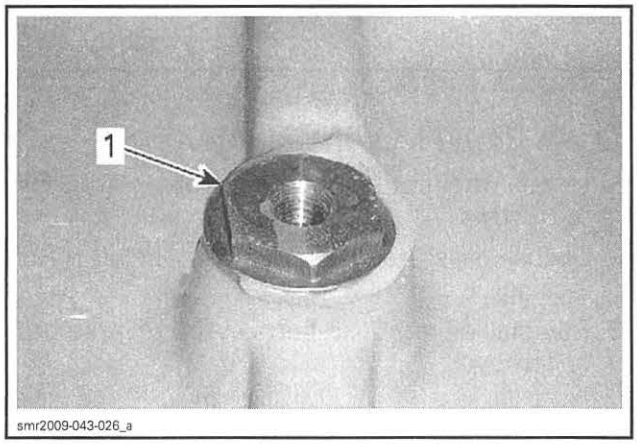

TYPICAL
1. *Blind hole insert*

All type inserts may be replaced if the inner screw threads are damaged.

NOTE: Inserts should only be replaced as a last resort. First try passing a tap, cleaning the hole, and using a NEW self-locking screw. If fastener can be tightened to the specified torque, do not change insert. If torque cannot be applied, drill and tap insert one size larger before trying to change an insert.

Insert Removal

1. Heat the insert using a heat gun to soften the glue securing the insert into the hull.
2. Remove any excess glue from around the head of the insert that would prevent proper insertion of the socket used to remove the insert.

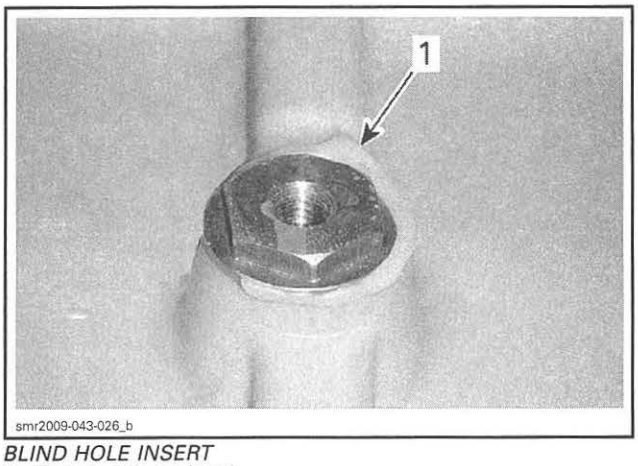

BLIND HOLE INSERT
1. Excess glue on head

3. Use a six-point socket of appropriate size and a ratchet wrench to unscrew the insert from the hull.

NOTE: An impact tool may be used to facilitate removal of the insert.

Insert Installation

1. Clean the insert hole in the hull to remove any dirt or loose glue using clean, dry, oil free filtered air.

NOTICE **Do not use a metal tool to clean or remove the glue inside the hull insert hole to prevent damaging the threads in the hull material. The glue that is properly bonded to the hull does not need to be removed.**

2. If the insert passes completely through the hull, screw a stud of appropriate size into the insert (M6 or M8) to prevent any glue from seeping into the fastener threads in the insert. Apply the SIX10 glue from West System (see *HULL REPAIR* at the beginning of this subsection for more information) or an equivalent to the outer threads of the insert.

NOTE: Apply a sufficient amount of glue through the full length of the insert threads to ensure excess glue will come out of the hole as the insert is screwed into the hull.

3. If the insert screws into a blind hole, apply the SIX10 glue or an equivalent to the threads in the hull.
4. Screw the insert in the hull boss and torque to 25 N•m (18 lbf•ft). Ensure the flanged portion of the insert makes contact with the boss it is being screwed into.

HULL (GTX/RXT/WAKE PRO)

SERVICE PRODUCTS

Description	Part Number	Page
BRP HEAVY DUTY CLEANER	293 110 001	701–702, 704, 707
LOCTITE 5150 (SILICONE SEALANT)	296 000 309	705–706, 712
LOCTITE 5900	293 800 066	701–704, 707

All Except RXT-X Series

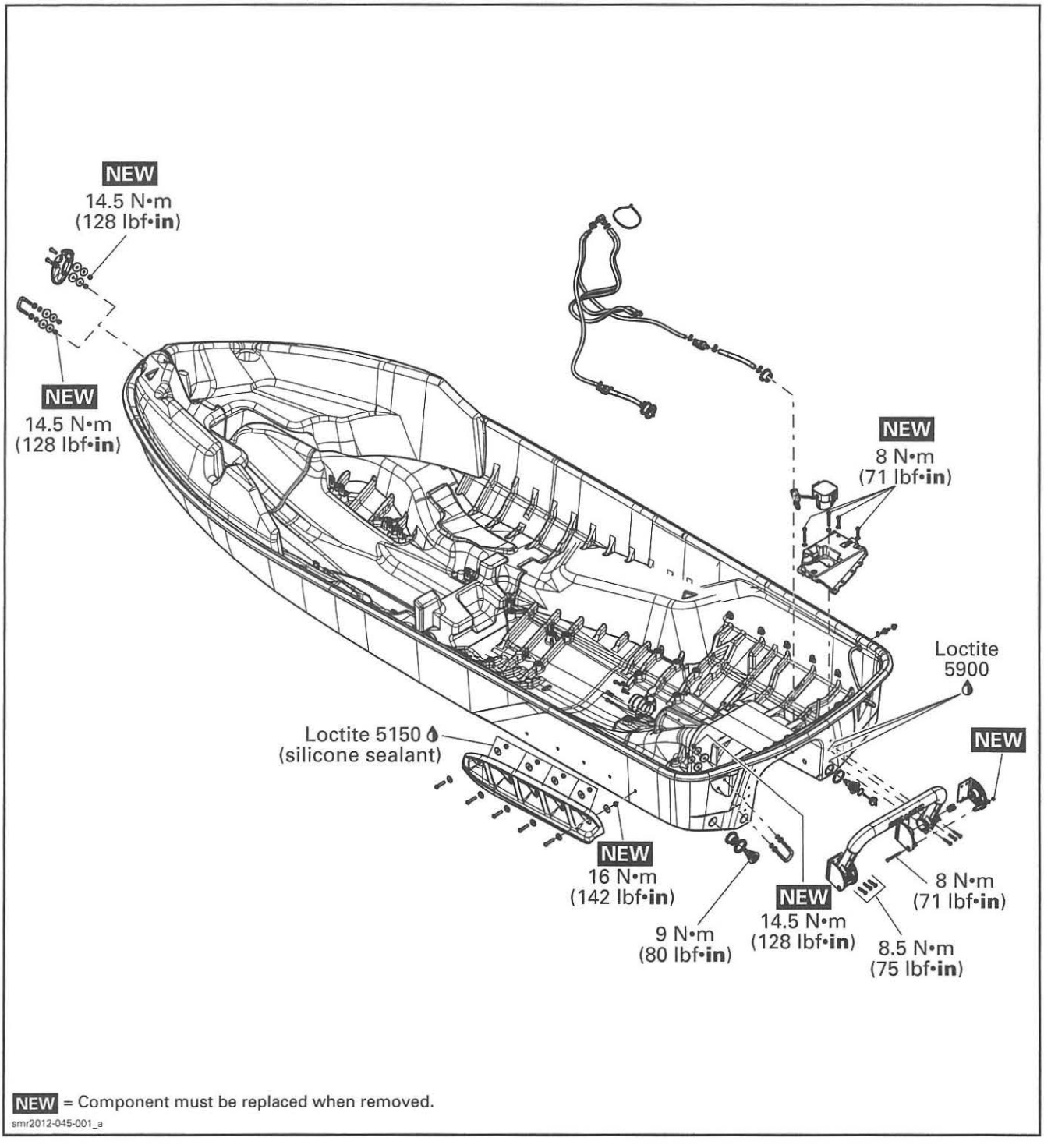

RXT-X Series

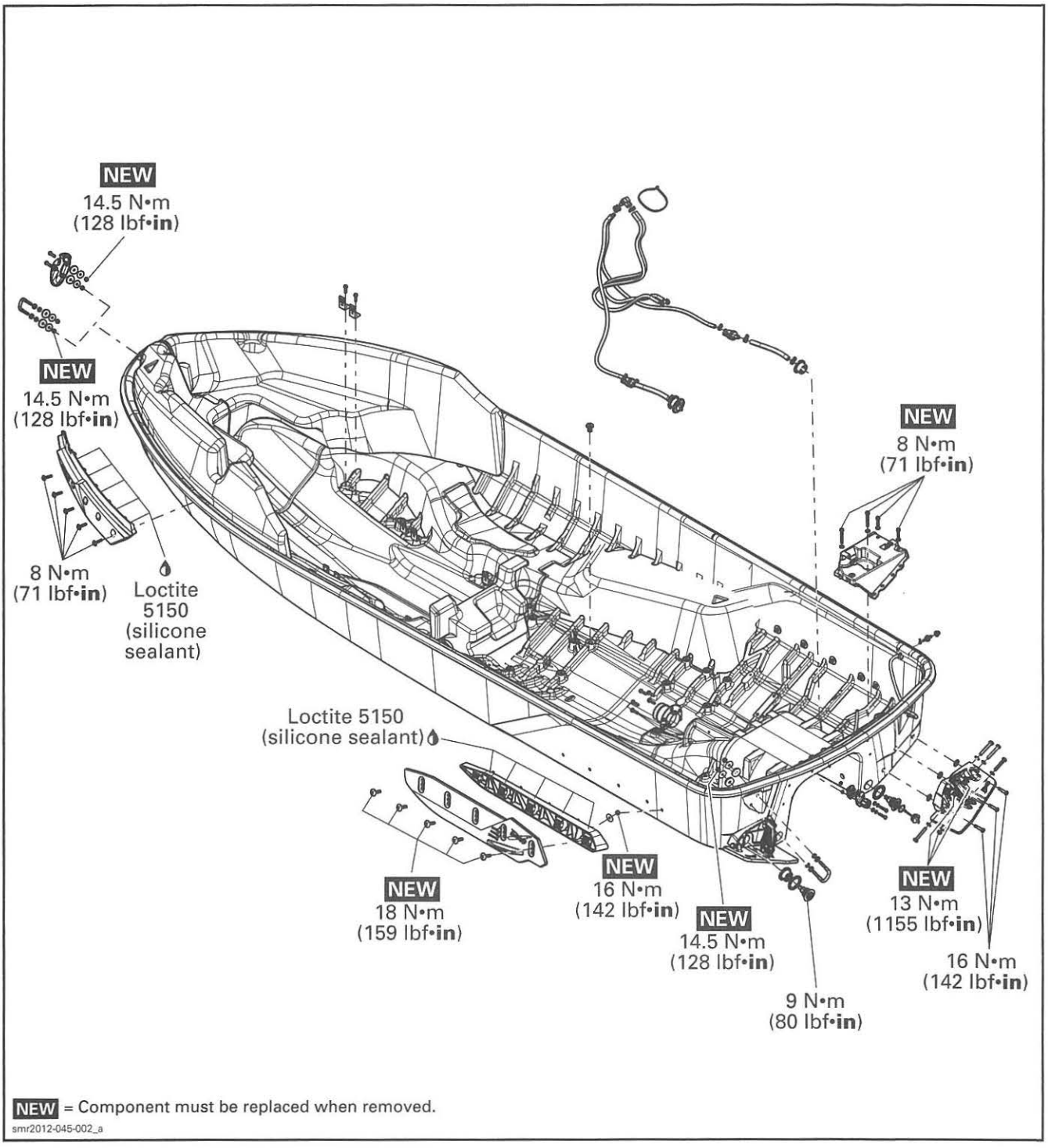
NEW
14.5 N•m
(128 lbf•in)
NEW
14.5 N•m
(128 lbf•in)
8 N•m
(71 lbf•in)
Loctite
5150
(silicone
sealant)
NEW
8 N•m
(71 lbf•in)
Loctite 5150
(silicone sealant)
NEW
18 N•m
(159 lbf•in)
NEW
16 N•m
(142 lbf•in)
NEW
14.5 N•m
(128 lbf•in)
9 N•m
(80 lbf•in)
NEW
13 N•m
(1155 lbf•in)
16 N•m
(142 lbf•in)
NEW = Component must be replaced when removed.
smr2012-045-002_a

All Models

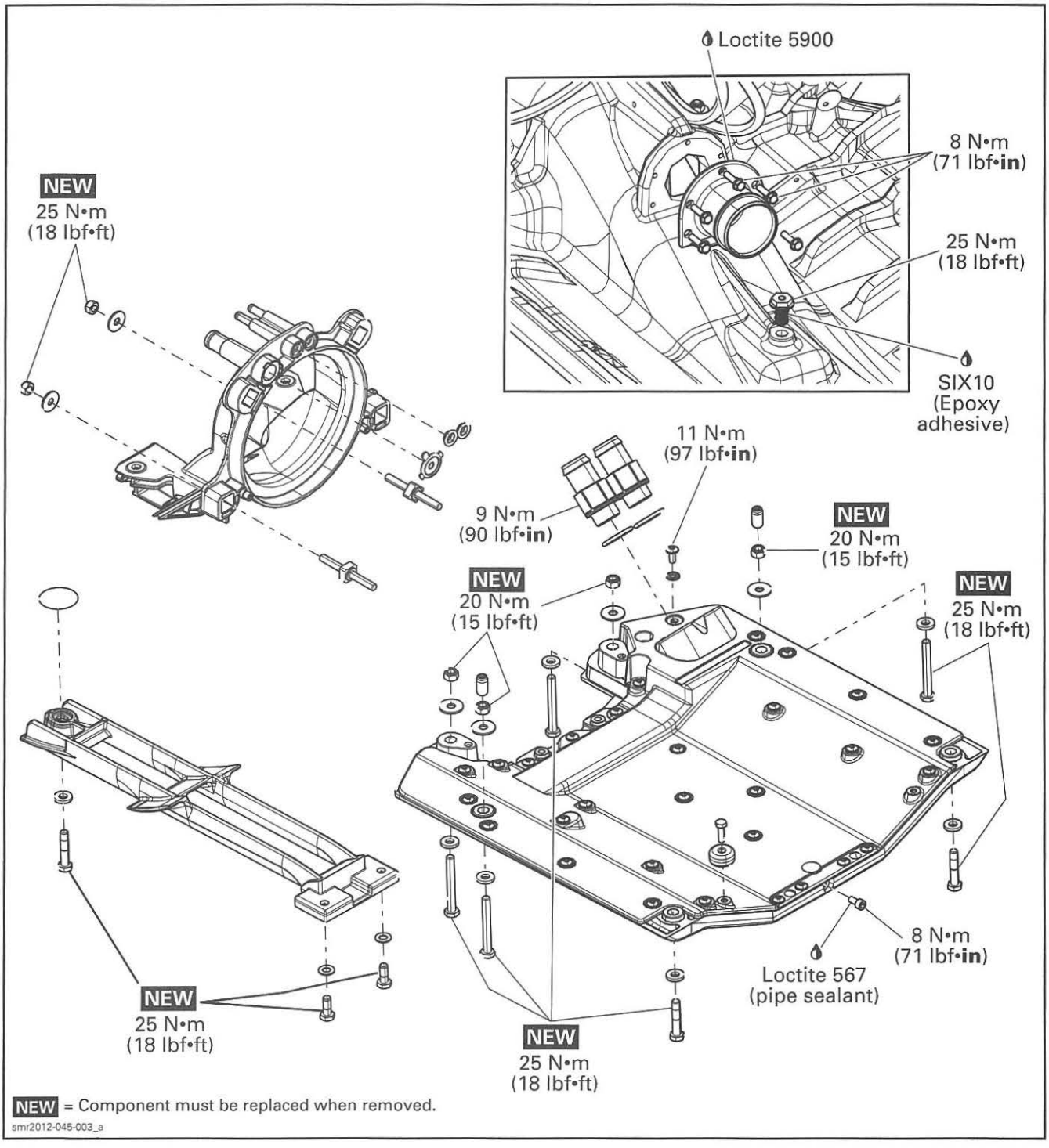
Loctite 5900
8 N•m
(71 lbf•in)
25 N•m
(18 lbf•ft)
SIX10
(Epoxy
adhesive)
NEW
25 N•m
(18 lbf•ft)
11 N•m
(97 lbf•in)
9 N•m
(90 lbf•in)
NEW
20 N•m
(15 lbf•ft)
NEW
20 N•m
(15 lbf•ft)
NEW
25 N•m
(18 lbf•ft)
8 N•m
(71 lbf•in)
Loctite 567
(pipe sealant)
NEW
25 N•m
(18 lbf•ft)
NEW
25 N•m
(18 lbf•ft)
NEW = Component must be replaced when removed.
smr2012-045-003_a

PROCEDURES

HULL

Hull Repair

The repair procedures of the S³ hull is not the same as a fiberglass composite hull and deck. The standard polyester based fiberglass repair kits **will not work** with this type of hull. The polyester will not adhere to the S³ hull material. Only two-part epoxy repair material should be used.

To repair a S³ hull, the use of an Epoxy repair system, such as the WEST SYSTEM® or an other equivalent epoxy system, is mandatory.

However, the finish on the S³ hull is a polyester based gelcoat with s a bonding layer between the hull and the gelcoat. Standard gelcoat refinishing can be performed if the damage is limited to the color surface. If damage requires the removal or the repair to structure material, the epoxy may also be used as a barrier coat before refinishing with gelcoat. Epoxy adheres to S³ hull material, and gelcoat adheres to epoxy.

An epoxy repair kit can be purchased directly from WEST SYSTEM.

Go to **www.westsystem.com**.

On this site you will find complete repair instructions, click on HOW TO USE.

Also training videos, tools and several products are available on the web site.

Consumer Assistance

North and South America
WEST SYSTEM 102 Patterson Ave. P.O. Box 665 Bay City, MI 48707-0665 Phone: 989 684-7286 Toll free: 866 937-8797 Fax: 989 684-1374
Europe, Middle East, Africa and Asia
Wessex Resins and Adhesives Limited, Cupernham House, Cupernham Lane, Romsey, England SO51 7LF Phone: 44-1-794-521-111 Fax: 44-1-794-517-779 E-mail: info@wessex-resins.com
Australia, South Pacific and Asia
ATL Composites, P.O. Box 2349/Southport 4215, Queensland, Australia, Tel.: +61 7-5563-1222, Fax: +61 7-5563-1585 E-mail: info@atlcomposites.com
New Zealand, South Pacific and Asia
Adhesive Technologies Ltd., 17 Corbans Ave./Box 21-169, Henderson, Auckland, New Zealand, Phone: 64-9-838-6961, Fax: 64-9-836-4849 E-mail: enquiries@adhesivetechnologies.co.nz

INLET GRATE

Inlet Grate Removal

Remove inlet grate retaining screws using an impact tool. Discard screws.

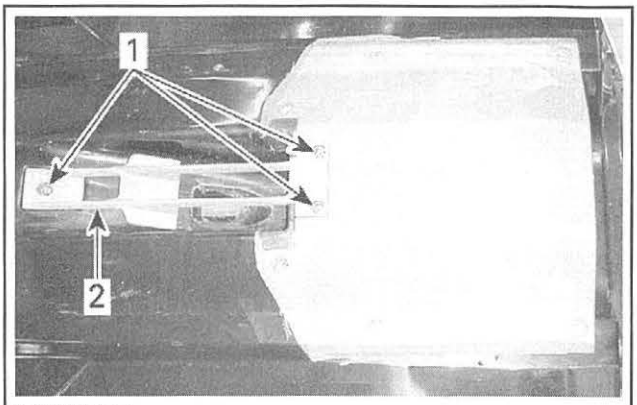

TYPICAL
1. *Inlet grate screws*
2. *Inlet grate*

Inlet Grate Installation

1. Install **NEW** inlet grate retaining screws at the proper location.

INLET GRATE SCREWS	
LOCATION	SCREW SIZE
Front	M8 x 40
Rear	M8 x 20

WEST SYSTEM is a registered trademark of Gougeon Brother, Inc

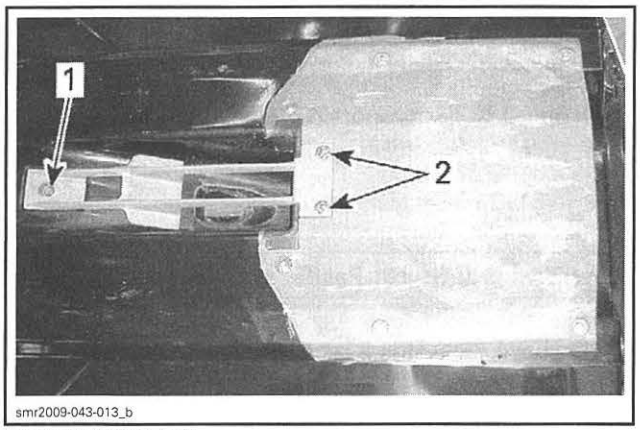

SCREW LOCATION
1. *Front*
2. *Rear*

2. Tighten screws to the specified torque and sequence.

TIGHTENING TORQUE		
INLET GRATE SCREWS	First step	Hand tighten
	Second step	25 N•m (18 lbf•ft)

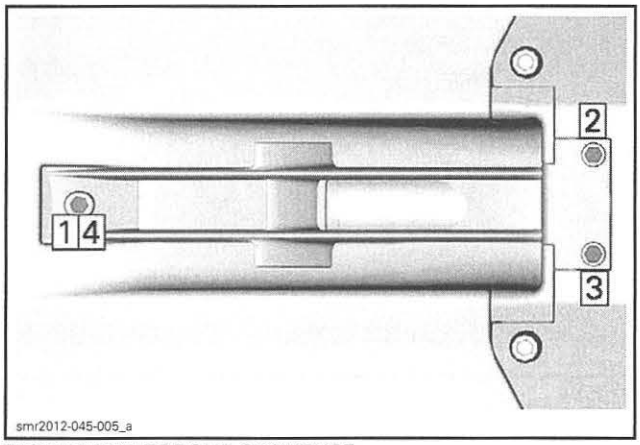

TIGHTENING TORQUE SEQUENCE

RIDE PLATE

Ride Plate Removal

1. Remove inlet grate, see procedure in this subsection.
2. Remove jet pump. Refer to *JET PUMP*.
3. Drain cooling system. Refer to *COOLING SYSTEM*.
4. From inside the hull, disconnect coolant hoses from the ride plate.
5. Remove coolant hose fittings from the ride plate.

NOTICE If possible, remove the hose fittings from the ride plate before removing the ride plate. If fittings cannot be removed, proceed with care when removing the ride plate.

6. Heat ride plate retaining screws using a heat gun.
7. Using an impact tool, remove and discard retaining screws.

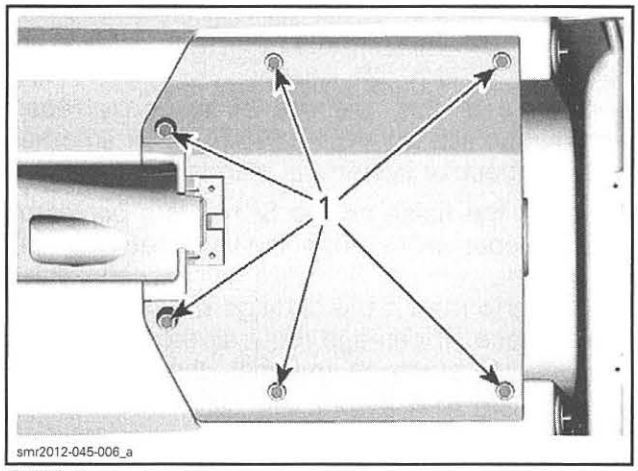

TYPICAL
1. *Ride plate retaining screws*

8. Install a low height hydraulic bottle jack and 2 steel plates between ride plate and hull as per following illustration.

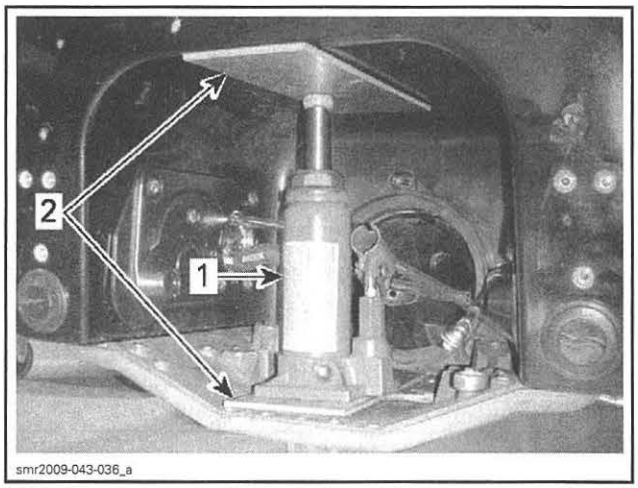

TYPICAL
1. *Hydraulic bottle jack*
2. *Steel plates*

9. Heat the edge of the ride plate with a heat gun to soften the sealant.
10. Start pumping the hydraulic jack slowly.
11. Using a sharp knife, carefully cut the sealant around the ride plate edges.

12. Pump the hydraulic jack slowly to pry the ride plate from the hull.

Ride Plate Cleaning

1. Carefully scrape off all excess sealant from ride plate and hull.
2. Clean hull surface with BRP HEAVY DUTY CLEANER (P/N 293 110 001) to eliminate grease, dust and sealant residue. Clean fitting threads.

Ride Plate Installation

1. Install both hose fittings on the ride plate. Tighten to the specified torque.

NOTE: Replace O-rings if necessary.

TIGHTENING TORQUE	
Hose fittings	9 N•m (80 lbf•**in**)

2. Apply LOCTITE 5900 (P/N 293 800 066) sealant as illustrated.

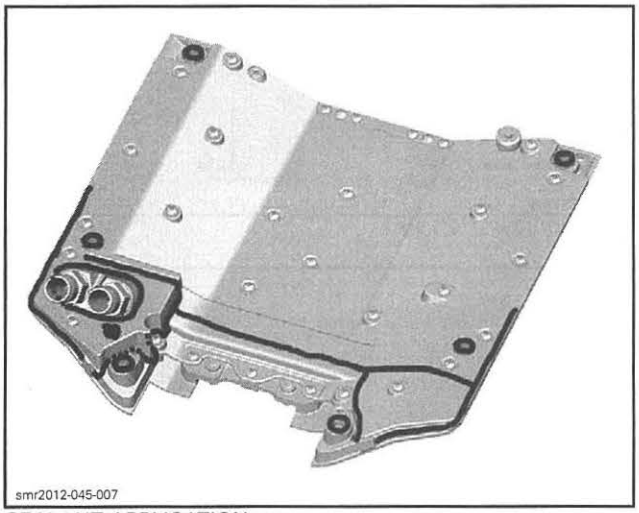

SEALANT APPLICATION

3. Position ride plate on hull and thread **NEW** screws 5 turns by hand.
4. Position inlet grate and thread **NEW** screws 5 turns by hand. Refer to *INLET GRATE* in this subsection.
5. Tighten screws to the specified torque and sequence.

TIGHTENING TORQUE	
Ride plate retaining screws	25 N•m (18 lbf•ft)

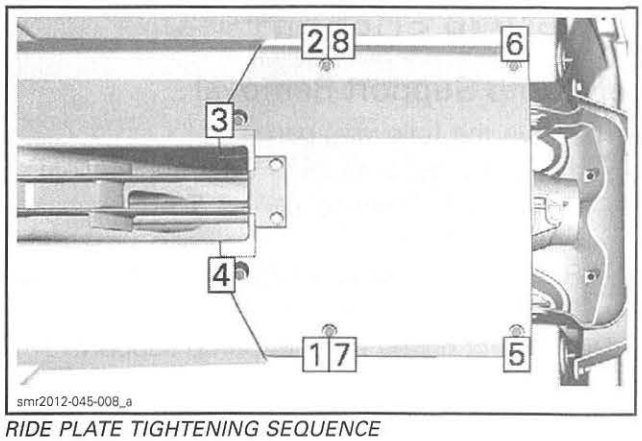

RIDE PLATE TIGHTENING SEQUENCE

6. Tighten inlet grate screws to the specified torque and sequence, refer to *INLET GRATE INSTALLATION* in this subsection.
7. Reinstall coolant hoses on ride plate fittings.

NOTICE **Make sure the coolant hose clamp screws do not rub on any component.**

TIGHTENING TORQUE	
Coolant hose clamps	4 N•m (35 lbf•**in**)

8. Install jet pump, refer to the *JET PUMP* subsection.
9. Install iBR gate and VTS trim ring, refer to the *iBR AND VTS* subsection.
10. Install a piece of hose over the threaded end of the front ride plate screws.

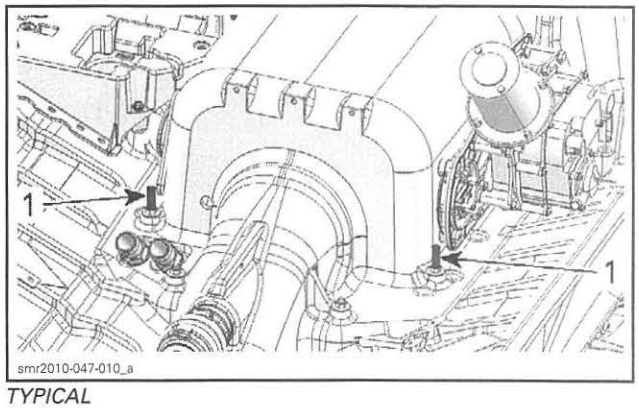

TYPICAL
1. Hoses

11. Install battery and electrical accessories support, refer to *CHARGING SYSTEM* subsection.
12. Fill and bleed cooling system and carry out a leak test. Refer to *COOLING SYSTEM* subsection.
13. Install all remaining parts. Refer to the applicable procedures.

JET PUMP SUPPORT

Jet Pump Support Removal

1. Remove the following parts:
   - Jet pump (refer to *JET PUMP* subsection)
   - Drive shaft (refer to *DRIVE SHAFT* subsection)
   - Ride plate (refer to *RIDE PLATE* in this subsection.
2. Disconnect hoses from jet pump support.

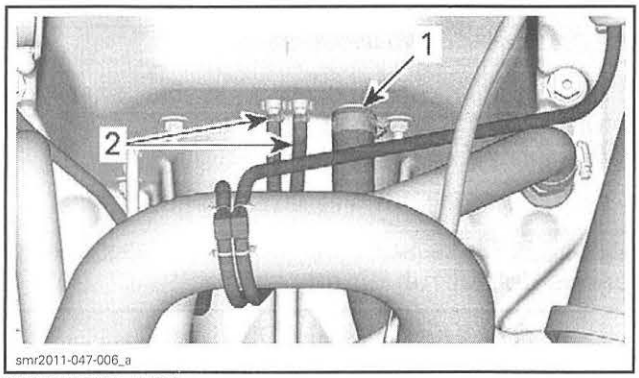

INSIDE THE HULL
1. *Exhaust water supply hose*
2. *Bailer hoses*

3. Remove jet pump support retaining nuts and washers.

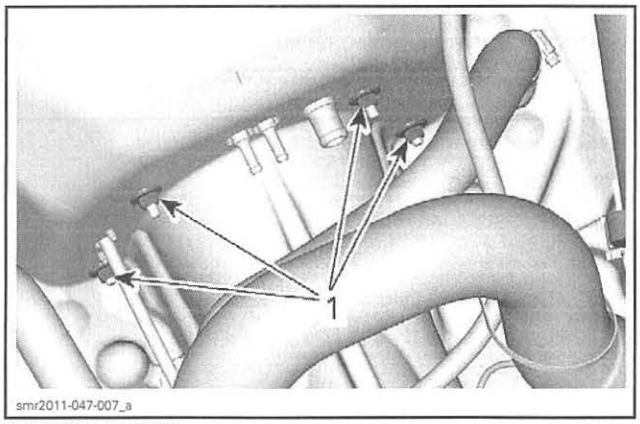

INSIDE THE HULL
1. *Jet pump support retaining nuts*

4. Heat the jet pump support using a heat gun in order to soften the sealant.
5. Pull jet pump support off the hull.
6. Note the alignment shims location.

NOTICE **Alignment shims have to be reinstalled at the same location.**

Jet Pump Support Cleaning

1. Scrape off all excess sealant from jet pump support, ride plate, and hull.
2. Inspect pump support for cracks or other damage.
3. Clean jet pump support and hull surface with BRP HEAVY DUTY CLEANER (P/N 293 110 001) to eliminate grease, dust, and sealant residue.

Jet Pump Support Installation

1. Make sure sealant contact areas are clean and dry.
2. Apply LOCTITE 5900 (P/N 293 800 066) on the jet pump support as shown (thick black line).

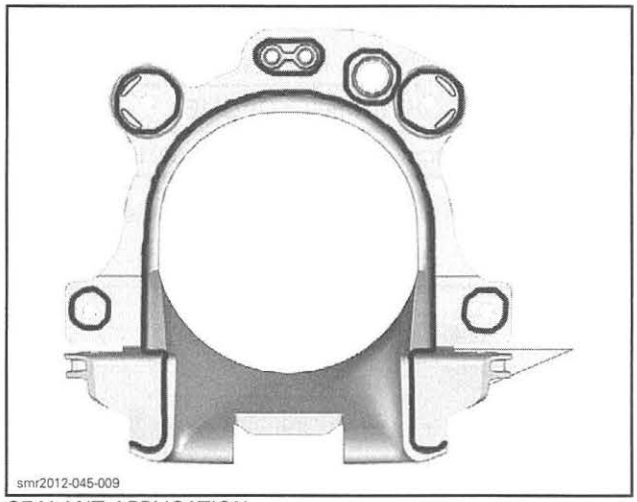

SEALANT APPLICATION

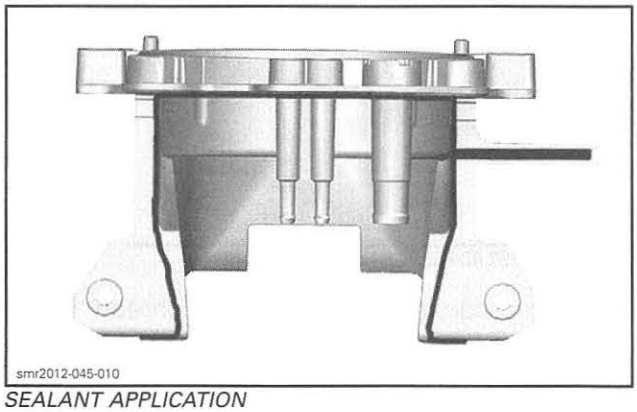

SEALANT APPLICATION

3. Insert the studs in the jet pump support square holes.
4. Slide the alignment shims on the studs.
5. Position the jet pump support against the hull.
6. Inside the hull, thread all 4 retaining nuts.
7. Tighten retaining nuts to the specified torque and sequence.

TIGHTENING TORQUE	
Jet pump support retaining nuts	25 N•m (18 lbf•ft)

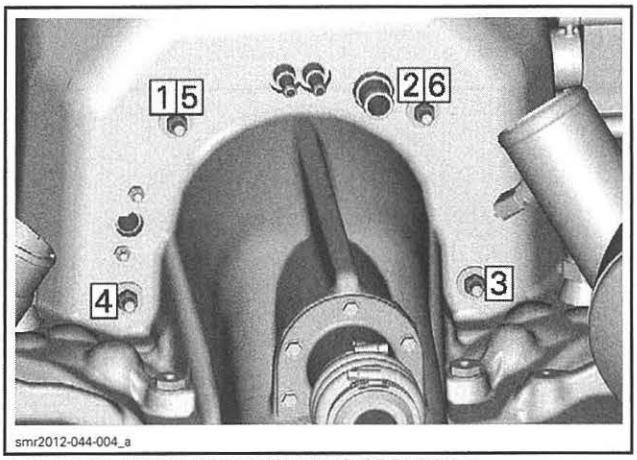

JET PUMP SUPPORT TIGHTENING SEQUENCE

8. Remove excess sealant.
9. Reinstall other removed parts. Refer to appropriate subsections for procedures.

Reused Jet Pump Support

Make sure sealant contact areas are clean and dry as explained in *JET PUMP SUPPORT CLEANING*.

New Jet Pump Support

Proceed with a flame treatment to increase Loctite 5900 adhesion as follows:

1. Heat surface where Loctite 5900 is applied using a propane torch. See *REUSED AND NEW JET PUMP SUPPORT INSTALLATION* for sealant application areas.
2. Stop heating as soon as the surface has changed to a dull finish.

NOTICE **Do not overheat to avoid any deformation of the jet pump support.**

Reused and New Jet Pump Support Installation

1. Apply LOCTITE 5900 (P/N 293 800 066) on the jet pump support as shown (thick black line).

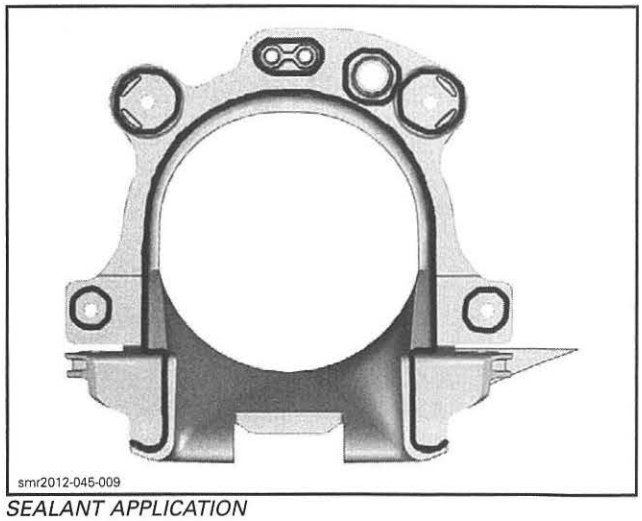

SEALANT APPLICATION

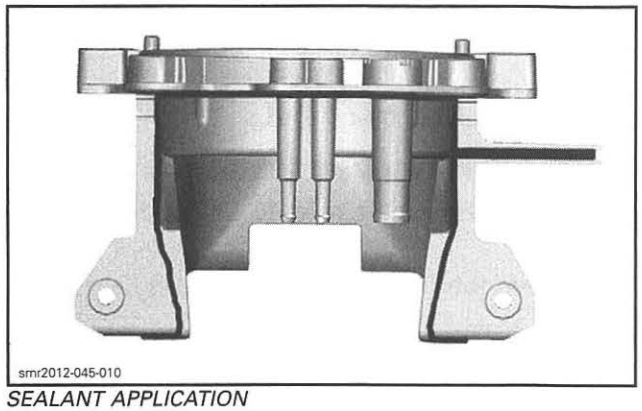

SEALANT APPLICATION

2. Insert the studs in the jet pump support square holes.
3. Slide the alignment shims on the studs.
4. Position the jet pump support against the hull.
5. Inside the hull, thread all 4 retaining nuts.
6. Tighten retaining nuts to the specified torque and sequence.

TIGHTENING TORQUE	
Jet pump support retaining nuts	25 N•m (18 lbf•ft)

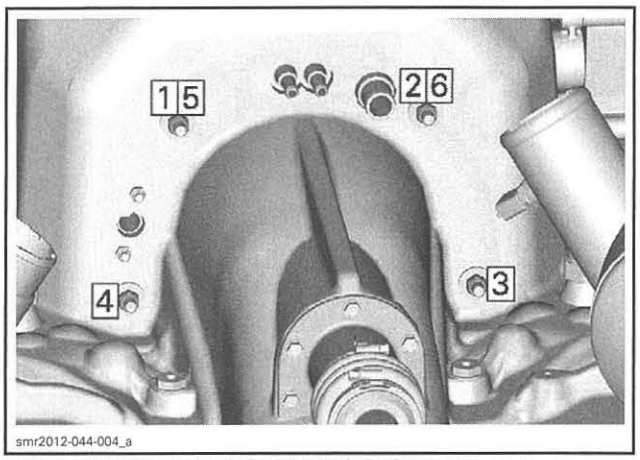

JET PUMP SUPPORT TIGHTENING SEQUENCE

7. Remove excess sealant.
8. Reinstall other removed parts. Refer to appropriate subsections for procedures.

THRU-HULL FITTING

Thru-Hull Fitting Removal

1. Remove drive shaft, refer to *DRIVE SHAFT* subsection.
2. Remove the thru-hull fitting retaining screws.

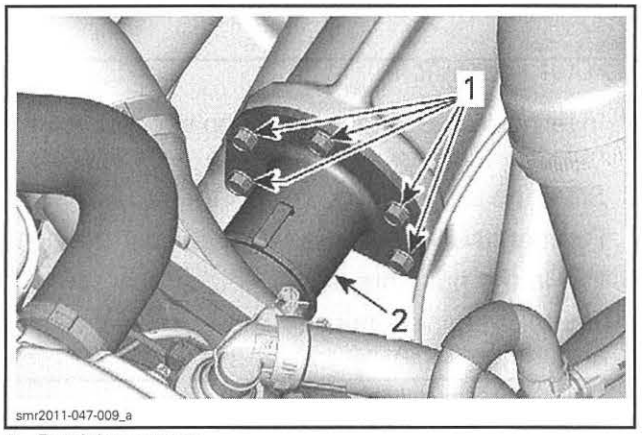

1. Retaining screws
2. Thru-hull fitting

3. Heat the thru-hull fitting with a heat gun to soften the sealer.
4. Pull thru-hull fitting off the hull.

Thru-Hull Fitting Area Cleaning

1. Scrape off all excess sealant from the hull.
2. Clean hull surface with BRP HEAVY DUTY CLEANER (P/N 293 110 001) to eliminate grease, dust, and sealant residue.

NOTE: Use only a clean, dry, oil free filtered air supply for dusting and drying parts or hull.

Thru-Hull Fitting Installation

1. Make sure thru-hull fitting sealing surface is free of sealant residue, clean and dry before installation.
2. Apply LOCTITE 5900 (P/N 293 800 066) sealant as illustrated.

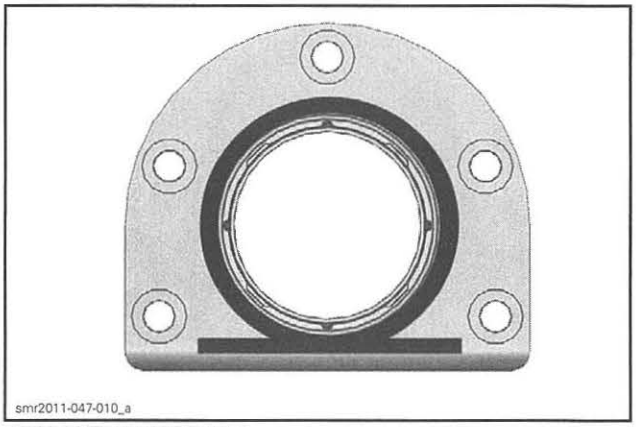

SEALANT APPLICATION

3. Tighten screws to the specified torque and sequence.

TIGHTENING TORQUE	
Thru-hull fitting retaining screws	8 N•m (71 lbf•**in**)

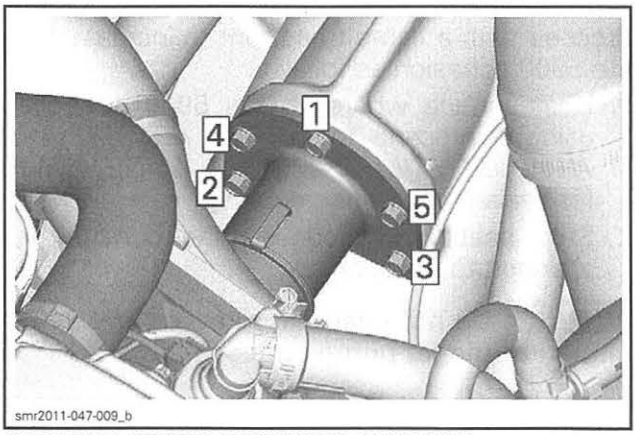

THRU-HULL FITTING TIGHTENING SEQUENCE

4. Install other removed parts, refer to the appropriate subsections.

BOW STABILIZER (RXT-X aS SERIES)

Bow Stabilizer Removal

Remove retaining screws.

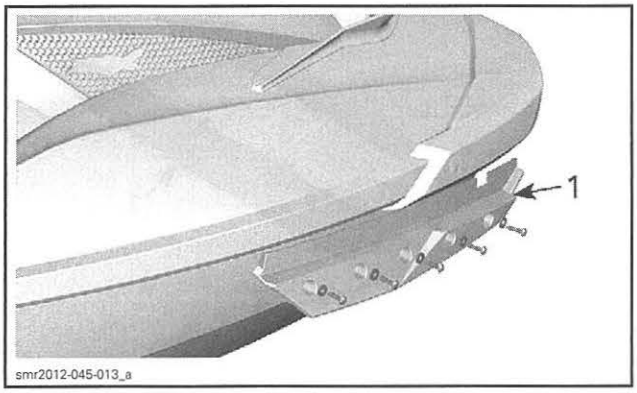

1. LH bow stabilizer

Bow Stabilizer Installation

The installation is the reverse of the removal procedure.

TIGHTENING TORQUE	
Bow stabilizer screws	8 N•m (71 lbf•**in**)

FIXED REAR SPONSONS

NOTE: Removal and installation procedure for RH and LH sponson is similar.

Fixed Rear Sponson Removal

Remove the muffler (on LH side) or the resonator (on RH side). Refer to the *EXHAUST SYSTEM* subsection.

From inside hull, hold sponson nuts while removing sponson retaining bolts and washers.

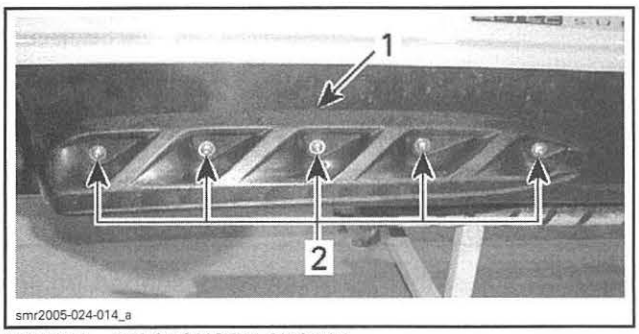

TYPICAL – RH SPONSON SHOWN
1. Sponson
2. Retaining bolts

Fixed Rear Sponson Installation

1. Clean any residues of silicone sealant on hull and sponsons.
2. Apply LOCTITE 5150 (SILICONE SEALANT) (P/N 296 000 309) on back side of sponson spacers.

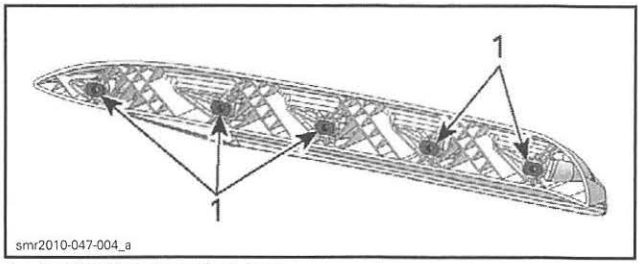

1. Apply silicone sealant here

3. Apply a small amount of LOCTITE 5150 (SILICONE SEALANT) (P/N 296 000 309) into each hull hole.

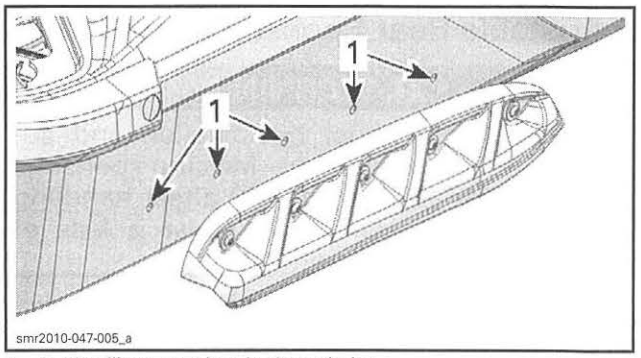

1. Apply silicone sealant in these holes

4. Insert a bolt with washer through each hole and install the sponson against the hull.
5. From inside hull, secure each bolt with a washer and a NEW elastic stop nut.
6. Tighten nuts as specified in the exploded views.
7. Reinstall muffler or resonator. Refer to *EXHAUST SYSTEM* for the procedure.

ADJUSTABLE REAR SPONSONS (RXT-X SERIES)

NOTE: The following procedures apply for RH and LH sides.

Adjustable Rear Sponson Removal

Remove and discard all screws securing adjustable sponsons.

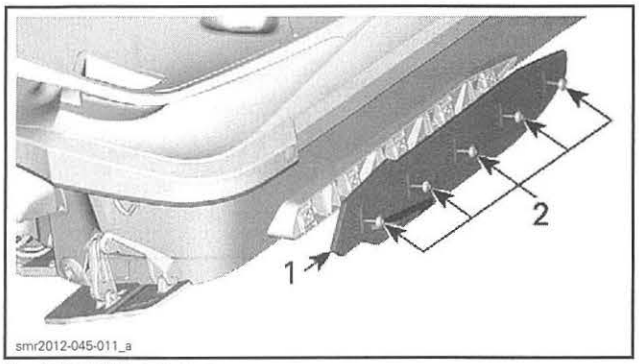

1. *Adjustable sponson*
2. *Retaining screws*

Adjustable Rear Sponson Installation

⚠ WARNING

Both sponsons must be installed and adjusted at the same height. Missing sponsons or improper adjustment will affect handling and stability, which could cause a loss of control of the watercraft.

TIGHTENING TORQUE	
Sponson retaining screws	18 N•m (159 lbf•**in**)

ADJUSTABLE SPONSON SUPPORTS (RXT-X SERIES)

NOTE: Removal and installation procedure for RH and LH sponson is similar.

Adjustable Sponson Support Removal

Remove the *ADJUSTABLE SPONSON*, see procedure in this subsection.

Remove resonator (on RH side) or muffler (on LH side). Refer to *EXHAUST SYSTEM* subsection.

From inside hull, remove nuts and washers retaining the adjustable sponson support.

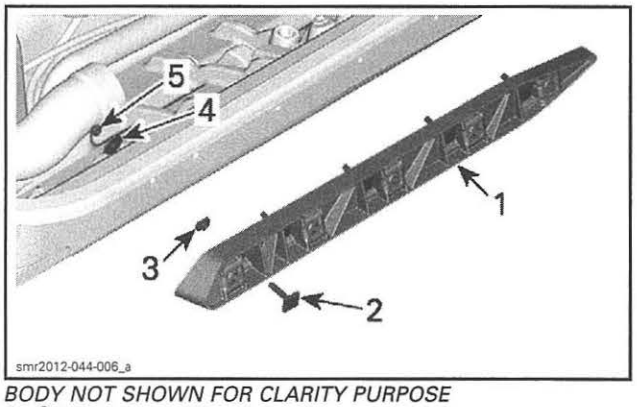

BODY NOT SHOWN FOR CLARITY PURPOSE
1. *Sponson support*
2. *Square head stud*
3. *Push nut*
4. *Washer*
5. *Elastic stop nut*

Adjustable Sponson Support Installation

The installation is the reverse of the removal procedure. However, pay attention to the following.

REQUIRED PRODUCT	LOCATION
LOCTITE 5150 (SILICONE SEALANT) (P/N 296 000 309)	Around each hole of sponson support

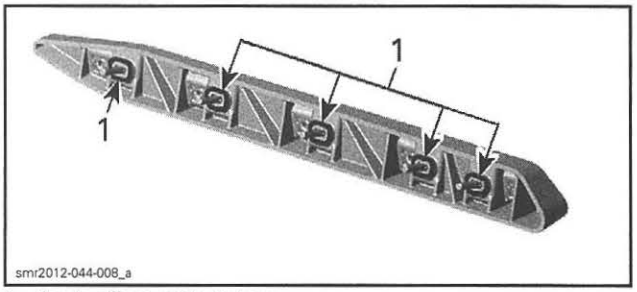

1. *Apply silicon sealant here*

TIGHTENING TORQUE	
Sponson support nuts (NEW)	16 N•m (142 lbf•**in**)

Reinstall adjustable sponson as described in *ADJUSTABLE SPONSON INSTALLATION*.

ADJUSTABLE TRIM TABS (RXT-X aS MODEL)

NOTE: The following procedures apply for RH and LH sides.

Adjustable Trim Tab Removal

1. Remove fasteners retaining trim tab and link rod to trim tab support.

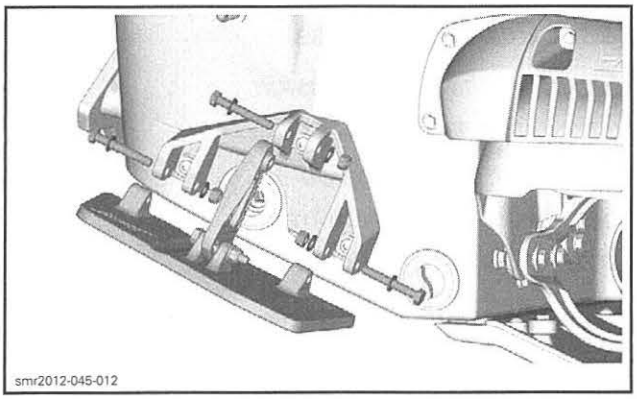
smr2012-045-012

2. Before removing trim tab support, trace line on hull around support to ensure alignment when reinstalling the support.
3. Remove trim tab support from hull.
4. Clean any residues of silicone sealant on hull and inside hull holes.

REQUIRED PRODUCT
BRP HEAVY DUTY CLEANER (P/N 293 110 001)

Adjustable Trim Tab Installation

NOTICE **Do not use pneumatic or electrical tools when stainless steel fasteners are used as seizure may occur.**

1. Apply sealant in each hull holes.

REQUIRED PRODUCT
LOCTITE 5900 (P/N 293 800 066)

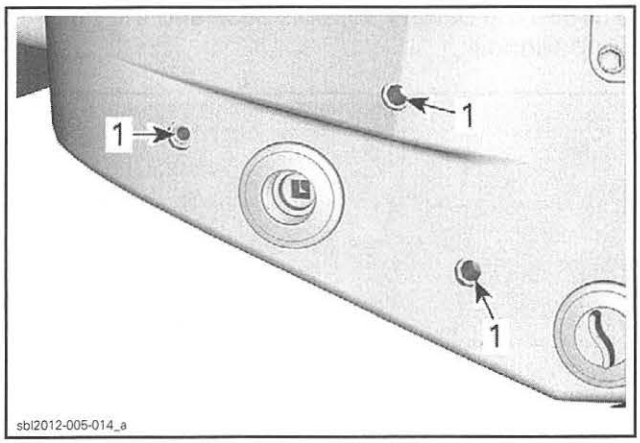

sbl2012-005-014_a

1. Apply sealant in these holes

2. Install the trim tab support using previously drawn marks.

TIGHTENING TORQUE	
Trim tab support screws	16 N•m (142 lbf•**in**)

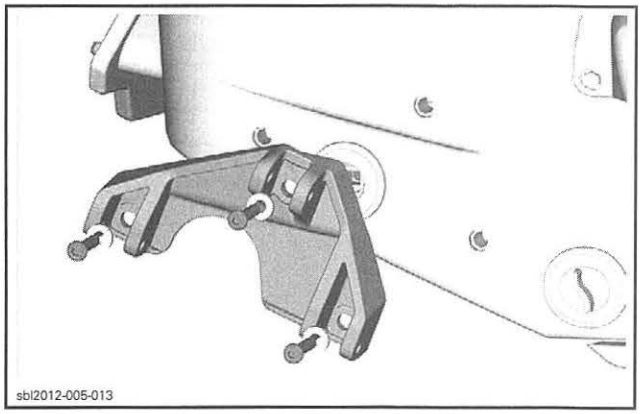
sbl2012-005-013

3. Install the link rod in the upper bracket of the support, as shown.

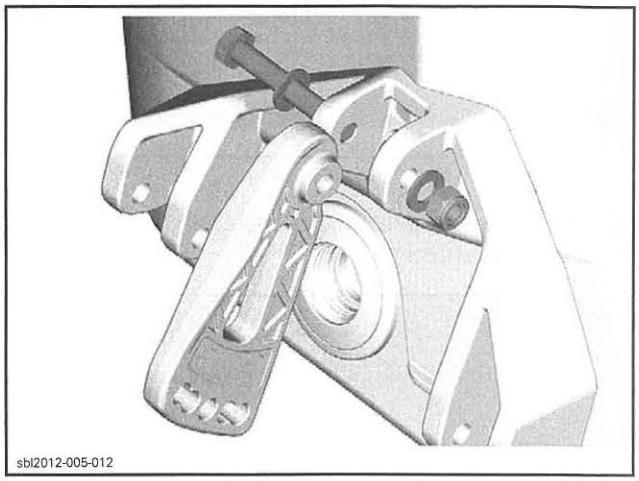
sbl2012-005-012

TIGHTENING TORQUE	
Link rod upper retaining nut	13 N•m (115 lbf•**in**)

4. Secure the trim tab to support as shown.

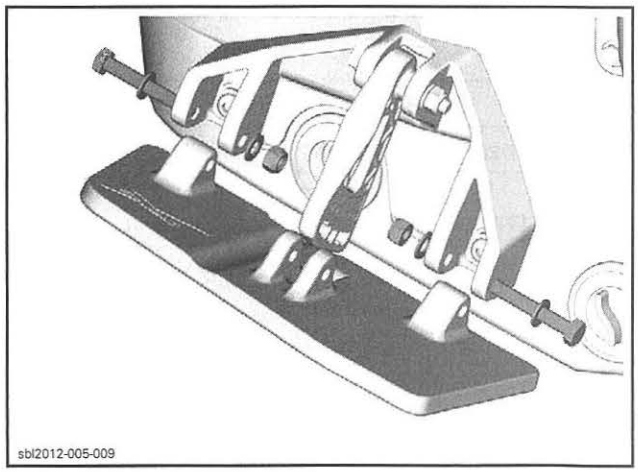
sbl2012-005-009

TIGHTENING TORQUE	
Trim tab retaining nuts	13 N•m (115 lbf•**in**)

5. Secure the bottom of the link rod. Position the link rod to the 0 (zero) position (factory setting).

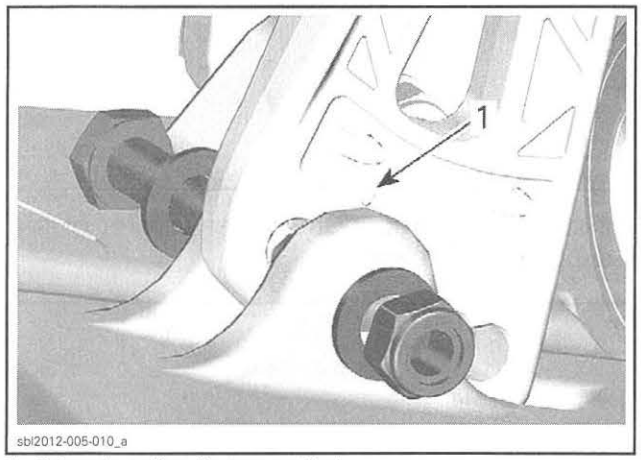

1. 0 (zero) position (factory setting)

NOTE: Make sure to place the bolt head toward outside of watercraft.

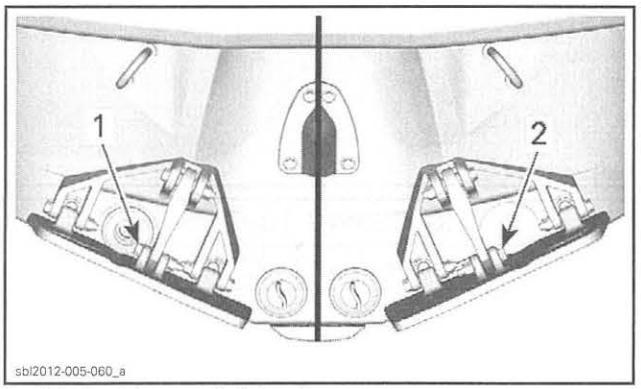

1. Bolt head here – left link rod
2. Bolt head here – right link rod

TIGHTENING TORQUE	
Link rod lower retaining nut	13 N•m (115 lbf•**in**)

BAILERS

Two bailer pick ups (one each side), serve to drain the bilge of the watercraft when it is in operation.

The bailer pick ups are connected through a hose system to two syphon tubes mounted in the jet pump venturi that draw the water out of the bilge through the bailer pick ups. The bailers are also connected to the bilge drain plugs in the stern.

Bailer Pick-Up Access

Models Without Suspension

Remove rear access panels.

Models with Suspension

Open the boarding platform.

Remove the storage bins.

Bailer Pick-Up Inspection

1. Locate bailer pick-up. Refer to *BAILER PICK-UP ACCESS* in this subsection.
2. Inside hull, check holes in the bailer pick-ups to see if they are obstructed. Clean if necessary.

On the port side (LH), the bailer is located below the iBR actuator.

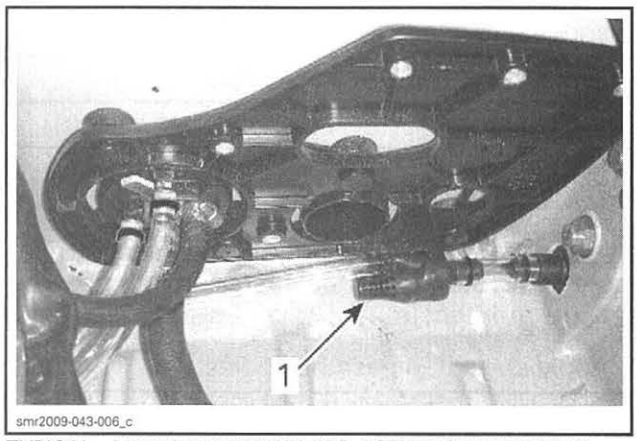

TYPICAL - LEFT SIDE SHOWN (iBR ACTUATOR REMOVED)
1. Bailer assembly

On the starboard side (RH), the bailer is located between the battery support base and the hull (jet pump tunnel).

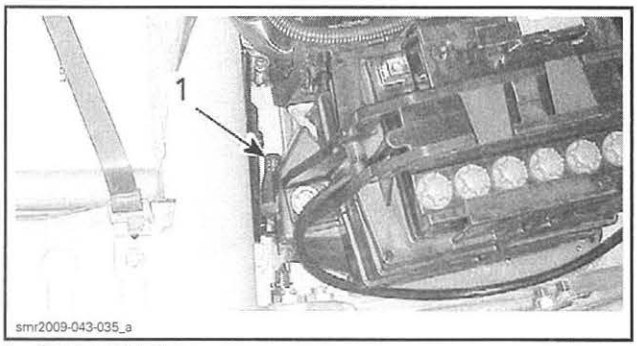

1. Starboard bailer

3. Check if the hole on each bailer hose elbow fitting is obstructed. Clean both elbow fittings if necessary.

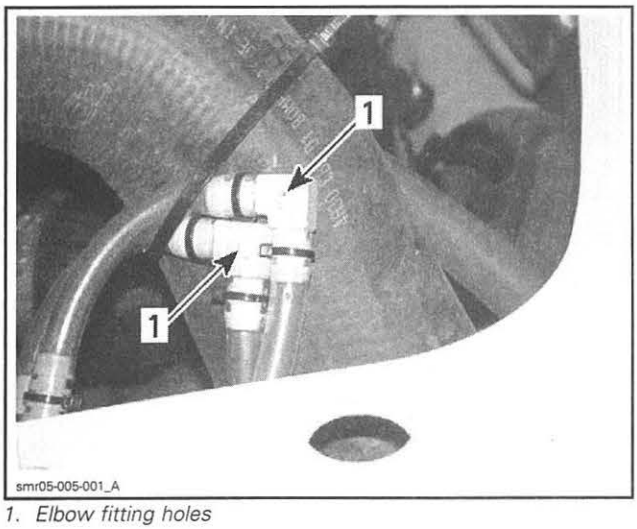

1. Elbow fitting holes

NOTE: When repositioning the bailer hose elbows, attach them at the highest position that you can on the exhaust hose.

DRAIN PLUGS

NOTE: The two drain plugs on the stern are each connected to a bailer. When watercraft is on dry land, the drain plugs can be removed to manually drain the bilge.

Drain Plug Access

Models Without Suspension

Remove the appropriate rear access panel.

Models with Suspension

Open the boarding platform.

Remove the appropriate storage bin.

Drain Plug Neck Removal

1. Locate drain plug. Refer to *DRAIN PLUG ACCESS* in this subsection.
2. Cut locking tie securing bailer hose to the drain plug assembly.

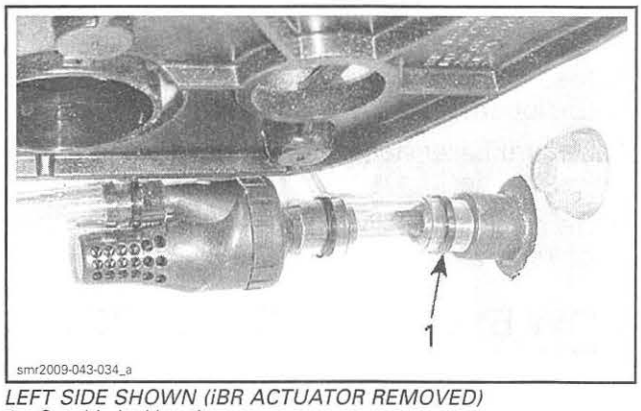

LEFT SIDE SHOWN (iBR ACTUATOR REMOVED)
1. Cut this locking tie

3. Unscrew the drain plug from the drain neck and pull the drain plug out of the neck.

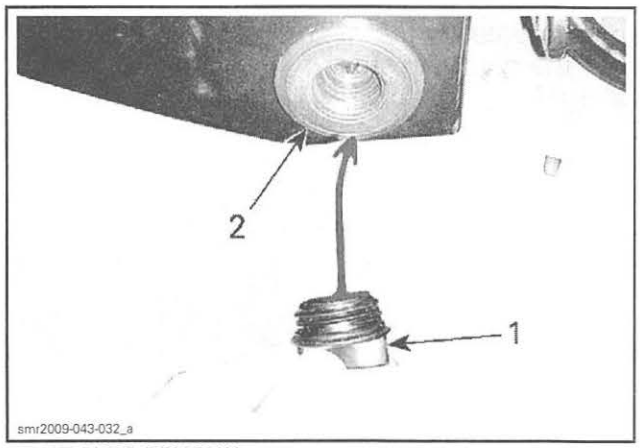

DRAIN PLUG REMOVAL
1. Drain plug
2. Drain neck

4. Inside hull, hold the drain neck nut using adjustable pliers.
5. Using a ratchet handle and extension of appropriate size, unscrew the drain neck from the hull.

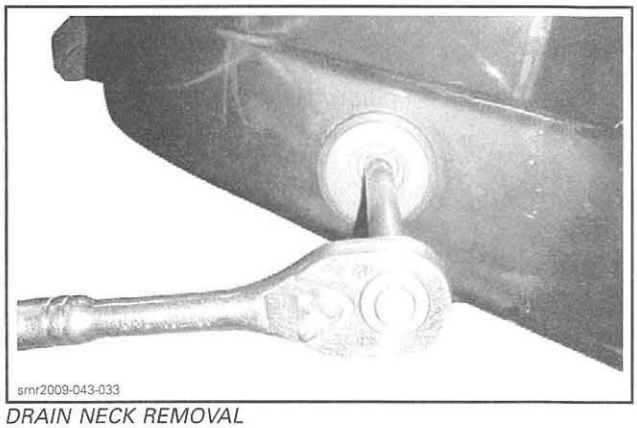

DRAIN NECK REMOVAL

Drain Plug Neck Installation

1. Install drain neck and torque to 9 N•m (80 lbf•**in**).
2. Secure bailer hose to drain neck using a NEW locking tie.
3. Reinstall all removed parts in the reverse order of removal.

BOW EYELET OR iCATCH BOW CUP

Bow Eyelet/iCATCH Bow Cup Removal

Models with Suspension

To remove the retaining nuts on the bow mooring eyelet or the iCATCH bow cup, an access hole must be cut in the neoprene sealing pad. Carry out the following steps.

1. Remove splash deflector.
   1.1 Drill all rivets holding the splash deflector.

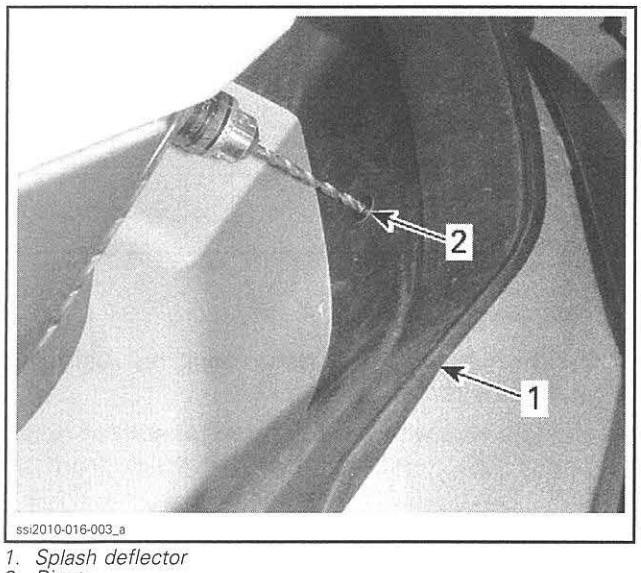

1. Splash deflector
2. Rivet

   1.2 Remove splash deflector from vehicle.

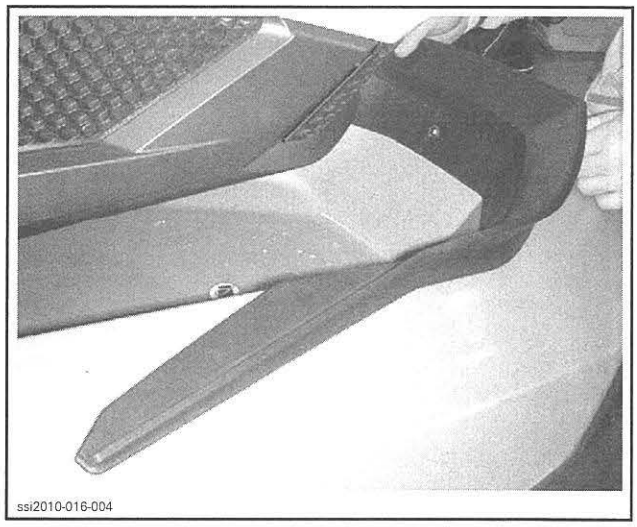

   1.3 Clean aluminum residues.
2. Using a cutting knife, make opening in the neoprene sealing pad.

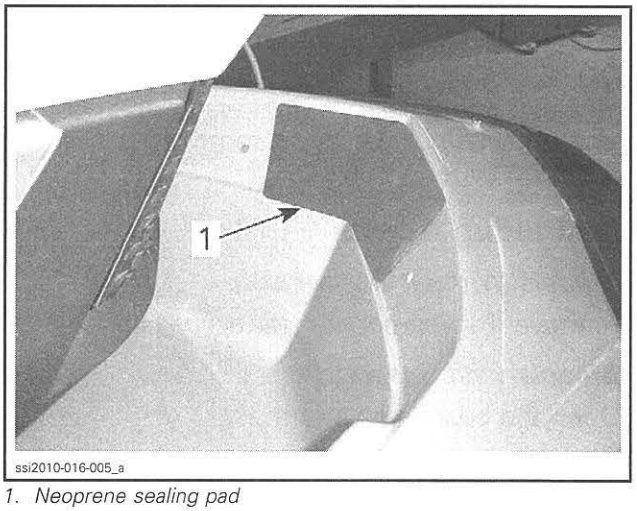

1. Neoprene sealing pad

3. Make 3 cuts according to the following picture.

NOTICE Do not cut neoprene sealing pad too close to its edges to prevent tearing it off when folding and ensure proper sealing.

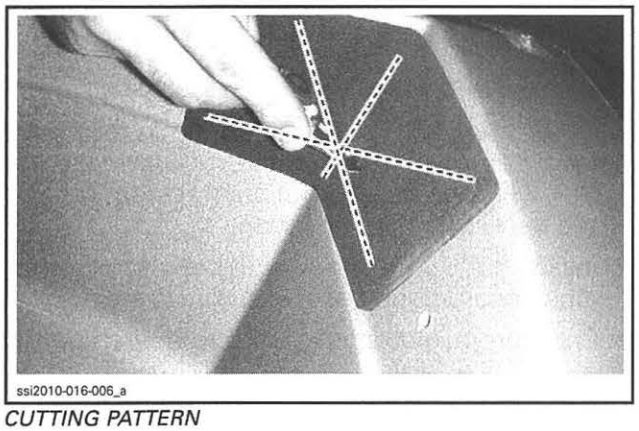

CUTTING PATTERN

4. Gently fold all flaps of the neoprene sealing pad towards the inside of the hull.

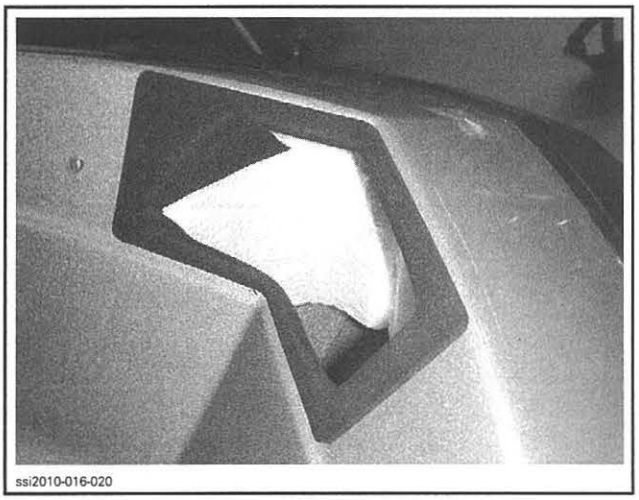

5. Unscrew and discard both elastic stop nuts holding the bow eyelet/iCATCH bow cup in place.

NOTE: The rubber washers and large washers should be kept for installation.

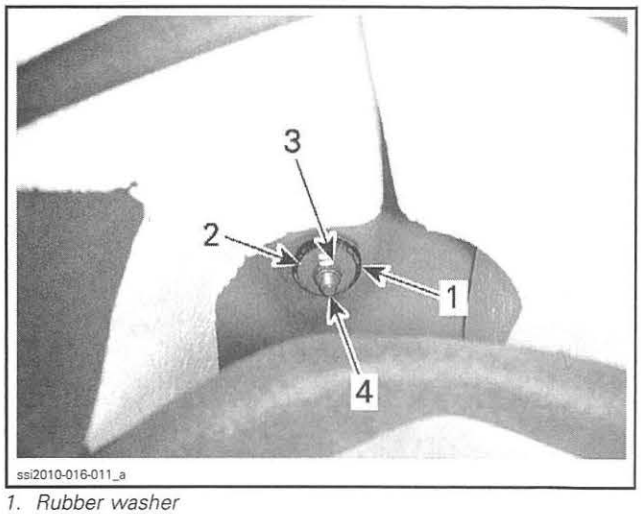

1. *Rubber washer*
2. *Large washer*
3. *Elastic nut*
4. *Screw*

6. From the outside of watercraft, pull bow eyelet/iCATCH bow cup to remove it from watercraft.
7. Clean any residue of silicone sealant on hull.

Models Without Suspension

1. Open the front storage cover.
2. Remove the storage bin.
3. Remove nuts and washers securing the bow eyelet or the iCATCH bow cup. Discard nuts.

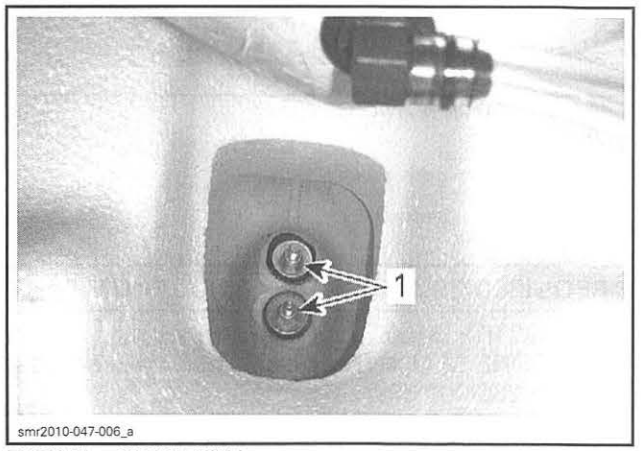

TYPICAL – INSIDE HULL
1. *Eyelet retaining nuts*

4. Remove the bow eyelet/iCATCH bow cup from the vehicle.
5. Clean any residue of silicone sealant from the hull.

Bow Eyelet/iCATCH Bow Cup Installation

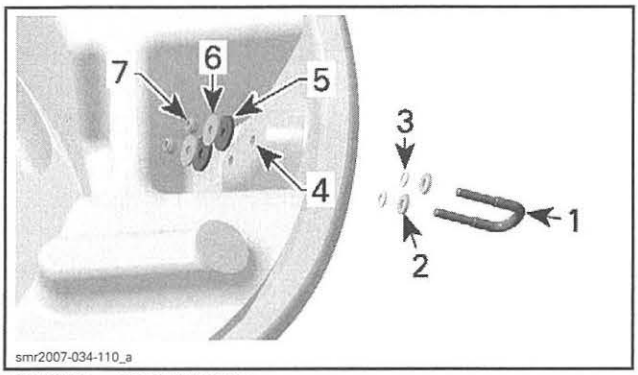

TYPICAL – BOW EYELET
1. *Bow eyelet*
2. *Small washer*
3. *Nylon washer*
4. *Loctite 5150 (silicone sealant) here*
5. *Rubber washer*
6. *Large washer*
7. *Elastic stop nut*

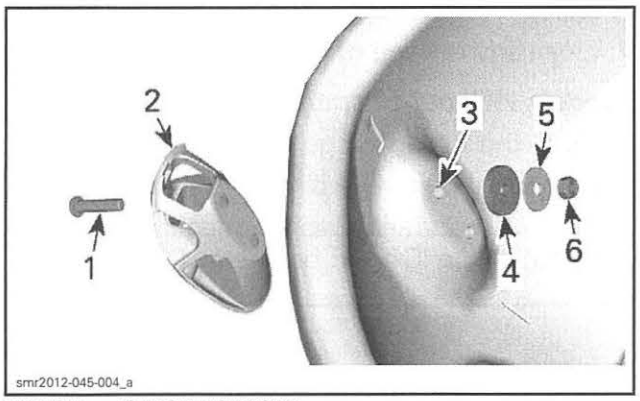

TYPICAL – iCATCH BOW CUP
1. *Allen screw*
2. *iCATCH bow cup*
3. *Loctite 5150 (silicone sealant) here*
4. *Rubber washer*
5. *Stainless steel flat washer*
6. *Elastic stop nut*

REQUIRED PRODUCT	LOCATION
LOCTITE 5150 (SILICONE SEALANT) (P/N 296 000 309)	Inside hull, around holes

TIGHTENING TORQUE	
Retaining nuts	14.5 N•m (128 lbf•**in**)

Models with Suspension

Reinstall the splash deflector on the fixed deck using 6 rivets.

NOTICE Ensure neoprene gasket edges have not been damaged during the installation procedure before reinstalling the splash deflector. If gasket is damaged, replace by a new one.

STERN EYELETS

Stern Eyelet Removal

1. On **models with suspension**, open the boarding platform and remove the applicable storage tray. On **models without suspension**, remove the applicable access cover.
2. Inside hull, unscrew and discard elastic stop nuts securing the stern eyelet to hull.
3. Pull stern eyelet to remove it from watercraft.
4. Clean any residue of silicone sealant from the hull.

Stern Eyelet Installation

1. Install small washers and nylon washers to stern eyelet and insert it through the hull.
2. Inside hull, apply LOCTITE 5150 (SILICONE SEALANT) (P/N 296 000 309) all around holes.
3. Install eyelet and other parts using NEW elastic stop nuts as per following illustration.

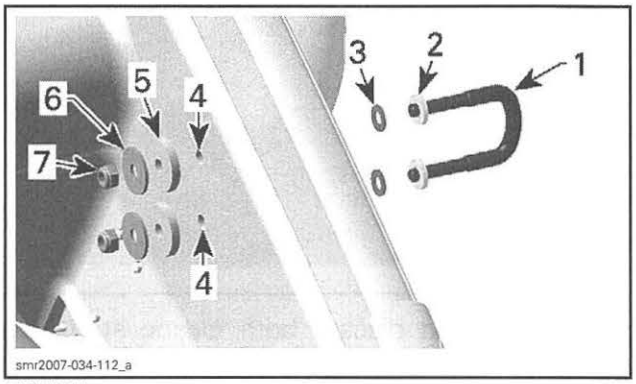

TYPICAL
1. *Stern eyelet*
2. *Small washer*
3. *Nylon washer*
4. *Loctite 5150 (silicone sealant) here*
5. *Rubber washer*
6. *Large washer*
7. *Elastic stop nut*

4. Torque retaining nuts to 14.5 N•m (128 lbf•**in**).

HULL INSERTS

Metal inserts (brass) of various types and sizes are screwed into the hull at various locations. A threaded hole in the insert is used for fastening various parts and equipment onto the hull.

Some inserts pass completely through the hull, while others do not (blind hole inserts).

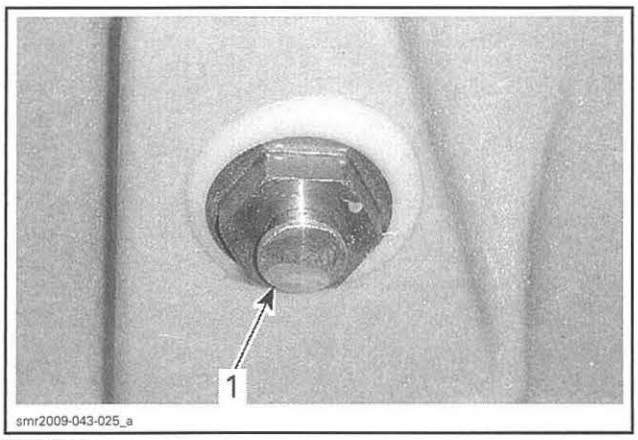

TYPICAL
1. Pass through insert

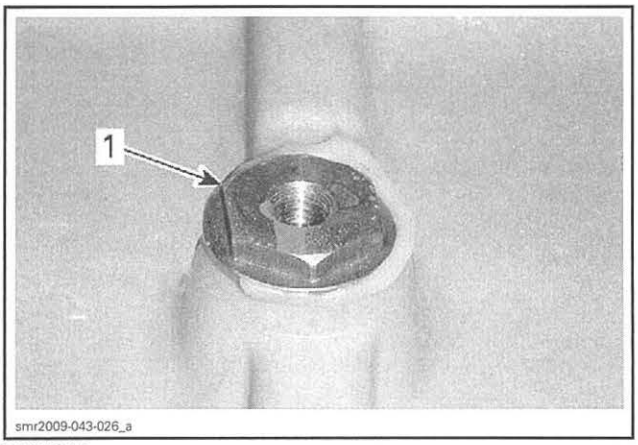

TYPICAL
1. Blind hole insert

All type inserts may be replaced if the inner screw threads are damaged beyond use.

NOTE: Inserts should only be replaced as a last resort. First try passing a tap, cleaning the hole, and using a NEW self-locking screw. If fastener can be tightened to the specified torque, do not change insert. If torque cannot be applied, drill and tap insert one size larger before trying to change an insert.

Insert Removal

1. Heat the insert using a heat gun to soften the glue securing the insert into the hull.
2. Remove any excess glue from around the head of the insert that would prevent proper insertion of the socket used to remove the insert.

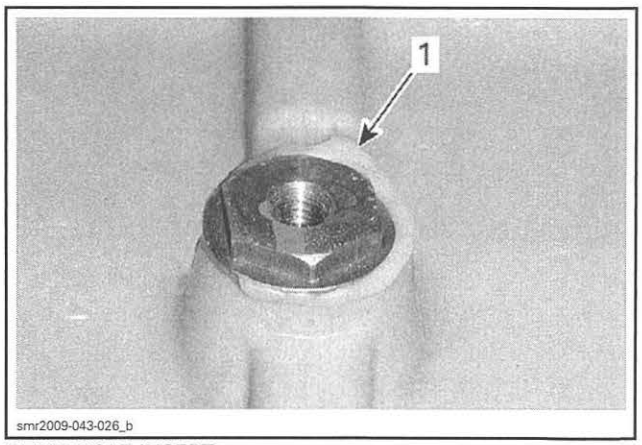

BLIND HOLE INSERT
1. Excess glue on head

3. Use a six-point socket of appropriate size and a ratchet wrench to unscrew the insert from the hull.

NOTE: An impact tool may be used to facilitate removal of the insert.

Insert Installation

1. Clean the insert hole in the hull to remove any dirt or loose glue using clean, dry, oil free filtered air.

NOTICE **Do not use a metal tool to clean or remove the glue inside the hull insert hole to prevent damaging the threads in the hull material. The glue that is properly bonded to the hull does not need to be removed.**

2. If the insert passes completely through the hull, screw a stud of appropriate size into the insert (M6 or M8) to prevent any glue from seeping into the fastener threads in the insert. Apply the SIX10 glue from West System (see *HULL REPAIR* at the beginning of this subsection for more information) or an equivalent to the outer threads of the insert.

NOTE: Apply a sufficient amount of glue thru the full length of the insert threads to ensure excess glue will come out of the hole as the insert is screwed into the hull.

3. If the insert screws into a blind hole, apply the SIX10 glue or an equivalent to the threads in the hull.
4. Screw the insert in the hull boss and torque to 25 N•m (18 lbf•ft). Ensure the flanged portion of the insert makes contact with the boss it is being screwed into.

GTS 130 AND GTI 130

MODEL			GTS 130 / GTI 130
ENGINE			
Engine type			ROTAX® 1503 4-TEC™, 4-stroke, Single Over Head Camshaft (SOHC)
Induction			Naturally-aspirated
Number of cylinders			3
Number of valves			12 valves with hydraulic lifters (no adjustment)
Bore			100 mm (3.9 in)
Stroke			63.4 mm (2.5 in)
Displacement			1 493.8 cm^3 (91 in^3)
Compression ratio			10.6:1
Maximum RPM			7300 RPM
Lubrication		Type	Dry sump (2 oil pumps). Replaceable oil filter. Water-cooled oil cooler
		Oil type	XPS synthetic blend oil (summer grade) (P/N 293 600 121). Refer to *LUBRICATION SYSTEM* subsection
		Capacity	3 L (3.2 qt (U.S. liq.)) oil change w/filter 4.5 L (4.8 qt (U.S. liq.)) total
Intake valve opening			10° ATDC
Intake valve closing			50° ABDC
Exhaust valve opening			50° BBDC
Exhaust valve closing			10° BTDC
Valve stem diameter	Intake	New	5.961 mm to 5.975 mm (.2347 in to .2352 in)
		Wear limit	5.930 mm (.233 in)
	Exhaust	New	5.946 mm to 5.960 mm (.2341 in to .2346 in)
		Wear limit	5.930 mm (.233 in)
Valve guide diameter		New	5.994 mm to 6.018 mm (.236 in to .2369 in)
		Wear limit	6.060 mm (.2386 in)
Valve spring free length	Inner	New	41.02 mm (1.615 in)
		Wear limit	38.80 mm (1.528 in)
	Outer	New	45.45 mm (1.789 in)
		Wear limit	43.00 mm (1.693 in)
Valve seat contact width	Intake	New	1.10 mm to 1.30 mm (.043 in to .051 in)
		Wear limit	1.60 mm (.063 in)
	Exhaust	New	1.25 mm to 1.55 mm (.049 in to .061 in)
		Wear limit	1.80 mm (.071 in)
Rocker arm inner diameter		New	20.007 mm to 20.020 mm (.7877 in to .7882 in)
		Wear limit	20.050 mm (.7894 in)
Rocker arm shaft diameter		New	19.980 mm to 19.993 mm (.7866 in to .7871 in)
		Wear limit	19.970 mm (.7862 in)
Cylinder head maximum warpage		Service limit	0.15 mm (.006 in)

MODEL			GTS 130 / GTI 130
ENGINE (cont'd)			
Piston ring type		1st	Upper compression ring, rectangular
		2nd	Lower compression ring, tapered face
		3rd	Oil scraper ring
Ring end gap	Rectangular	New	0.30 mm to 0.50 mm (.012 in to .02 in)
	Taper-face	New	0.35 mm to 0.55 mm (.014 in to .022 in)
	Oil scraper ring	New	0.35 mm to 0.50 mm (.014 in to .02 in)
	All	Wear limit	1.50 mm (.059 in)
Ring/piston groove clearance	Rectangular	New	0.025 mm to 0.070 mm (.001 in to .003 in)
	Taper-face	New	0.015 mm to 0.06 mm (.0006 in to .0024 in)
	Oil scraper ring	New	0.020 mm to 0.055 mm (.001 in to .002 in)
	All	Wear limit	0.15 mm (.006 in)
Piston/cylinder wall clearance		New	0.024 mm to 0.056 mm (.0009 in to .0022 in)
		Wear limit	0.100 mm (.0039 in)
Cylinder taper		Wear limit	0.100 mm (.0039 in)
Cylinder out of round (maximum)			0.015 mm (.0006 in)
Camshaft bearing journal diameter	Front	New	24.939 mm to 24.960 mm (.9819 in to .9827 in)
		Wear limit	24.910 mm (.9807 in)
	PTO and center	New	39.892 mm to 39.905 mm (1.5706 in to 1.5711 in)
		Wear limit	39.880 mm (1.5701 in)
Camshaft bearing inner diameter	Front	New	25.000 mm to 25.013 mm (.9843 in to .9848 in)
		Wear limit	25.050 mm (.9862 in)
	PTO and center	New	40.000 mm to 40.020 mm (1.5748 in to 1.5756 in)
		Wear limit	40.050 mm (1.5768 in)
Cam lobe height	Intake	New	31.540 mm to 31.740 mm (1.2417 in to 1.2496 in)
		Wear limit	31.50 mm (1.2402 in)
	Exhaust	New	31.430 mm to 31.630 mm (1.2374 in to 1.2453 in)
		Wear limit	31.380 mm (1.2354 in)
Crankshaft deflection		Maximum	0.05 mm (.002 in)
Crankshaft axial clearance		New	0.080 mm to 0.220 mm (.0031 in to .0087 in)
		Wear limit	0.35 mm (.014 in)
Crankshaft bearing journal diameter		New	49.991 mm to 50.000 mm (1.9681 in to 1.9685 in)
		Wear limit	49.950 mm (1.9665 in)
Crankshaft radial clearance		Wear limit	0.07 mm (.0028 in)
Connecting rod big end diameter		Service limit	45.080 mm (1.7748 in)
Connecting rod big end radial play		Service limit	0.090 mm (.0035 in)
Connecting rod big end axial play		New	0.100 mm to 0.352 mm (.004 in to .014 in)
		Wear limit	0.500 mm (.0197 in)
Connecting rod small end diameter		New	23.010 mm to 23.020 mm (.9059 in to .9063 in)
		Wear limit	23.070 mm (.9083 in)
Connecting rod small end radial play		Wear limit	0.080 mm (.0031 in)

MODEL			GTS 130 / GTI 130
ENGINE (cont'd)			
Piston pin diameter		New	22.996 mm to 23.000 mm (.9054 in to .9055 in)
		Wear limit	22.990 mm (.9051 in)
Balance shaft journal diameter		New	31.984 mm to 32.000 mm (1.2592 in to 1.2598 in)
		Wear limit	31.950 mm (1.2579 in)
Balance shaft radial clearance		Wear limit	0.070 mm (.0028 in)
Balance shaft axial clearance		New	0.020 mm to 0.250 mm (.0008 in to .0098 in)
Supercharger shaft driven plate journal depth		New	N.A.
		Wear limit	N.A.
Supercharger drive gear thickness		New	N.A.
		Wear limit	N.A.
Supercharger lock washer thickness		New	N.A.
		Wear limit	N.A.
Supercharger spring washer package height (not compressed)		New	N.A.
		Wear limit	N.A.
AIR INTAKE SYSTEM			
Intake spark arrester			Tubular, wire screen
COOLING SYSTEM			
Type			Closed loop cooling system
Coolant			Ethylene-glycol and distilled water (50%/50%). Use premix coolant from BRP or a coolant specially formulated for aluminum engines
Cooling system capacity			5.5 L (5.8 qt (U.S. liq.)) total
Thermostat			87°C (189°F)
Monitoring beeper setting			100°C (212°F)
EXHAUST SYSTEM			
Type			D-Sea-Bel sound reduction system. Water cooled/water injected (open loop). Direct flow from jet pump
Water injection in muffler			3 x 3.5 mm (.138 in) on exhaust pipe and 1 x 3.5 mm (.138 in) on muffler
FUEL SYSTEM			
Fuel injection type			Multipoint fuel injection with iTC (intelligent Throttle Control). Single throttle body (62 mm) with an actuator
Fuel pressure			386 kPa to 414 kPa (56 PSI to 60 PSI)
Fuel injector		Quantity	3
Fuel type	Inside North America ((RON + MON)/2)		87 or higher
	Outside North America (RON)		92 or higher
Fuel tank (including reserve)			60 L (15.9 U.S. gal.)
Fuel tank reserve (from low level signal)			approx. 12 L (3.2 U.S. gal.)
Idle speed			1750 ± 50 RPM (not adjustable)

MODEL			GTS 130 / GTI 130
ELECTRICAL SYSTEM			
Magneto generator output			360 W @ 6000 RPM
Stator			0.1 to 1.0 Ω
Battery			12 V, 30 A•h
Anti-start system			D.E.S.S. (Digitally Encoded Security System) with selectable maximum vehicle speed settings for RK (rental key) and LK (learning key)
Ignition system type			IDI (Inductive Discharge Ignition)
Ignition timing			Variable (electronically controlled)
Spark plug		Make and type	NGK DCPR8E
		Gap	0.7 mm to 0.8 mm (.028 in to .031 in)
Ignition coil		Primary	0.85 to 1.15 Ω
		Secondary	9.5 to 13.5 KΩ
Engine speed limiter setting			7650 RPM
Fuse box	#1: iBR control		5 A
	#2: Diagnostic connector		15 A
	#3: START/STOP		3 A
	#4: Gauge constant power		3 A
	#5: power		30 A
	#6: Voltage rectifier/regulator		30 A
	#8: Relay, fuses 2, 3 and 4		30 A
	#12: O.T.A.S., gauge start up and CAPS		3 A
	#13: Inj/Ign cyl 1		10 A
	#14: Inj/Ign cyl 2		10 A
	#15: Inj/Ign cyl 3		10 A
	#16: Starter solenoid		5 A
	#18: Fuel pump		10 A
	#19: ECM power		15 A
STEERING AND PROPULSION			
Steering			Fixed column
Steering nozzle pivoting angle			20°
O.T.A.S. (Off-Throttle Assisted Steering)			Electronically-controlled
Jet pump		Type	Axial flow single stage
		Grease type	Jet pump bearing grease (P/N 293 550 032)
Impeller		Rotation (seen from rear)	Counterclockwise
		Pitch	11°/18°
		Outside diameter	155.5 mm ± 0.06 mm (6.122 in ± .002 in)
Impeller/wear ring clearance		New	0 mm to 0.23 mm (0 in to .009 in)
		Wear limit	0.35 mm (.0138 in)
Impeller shaft		End play (new)	0
		Side play	0
Drive shaft		Coupling type	Crowned splines, direct drive
		Deflection (max.)	0.5 mm (.02 in)
Minimum required water level for propulsion system			90 cm (3 ft) underneath the lowest rear portion of hull

MODEL			GTS 130 / GTI 130
iBR and VTS			
Description	GTS 130		N.A.
	GTI 130		Intelligent Brake and Reverse activated by a LH lever. Electronically-controlled iBR gate to provide brake, reverse, neutral and forward position
Gate angle (from horizontal line of watercraft)	GTS 130	Forward	N.A.
		Neutral	
		Braking	
		Reverse	
	GTI 130	Forward	Approx. from +8° to -4°
		Neutral	Approx. -52°
		Braking	Approx. -70°
		Reverse	Approx. from -52° to -70°
VTS system			N.A.
VTS range angle			N.A.
Actuator			N.A.
WEIGHT AND LOADING CAPACITY			
Dry weight		GTS 130	339 kg (745 lb)
		GTI 130	343 kg (755 lb)
Number of passenger (driver incl.)			3
Load limit (passenger and 10 kg (22 lb) luggage)			272 kg (600 lb)
DIMENSIONS			
Overall length			336.8 cm (132.6 in)
Overall width			123.1 cm (48.5 in)
Overall height			111.8 cm (44 in)
MATERIALS			
Hull			Composite fiberglass
Inlet grate			Aluminum
Steering cover			Thermoplastic
Impeller material			Stainless steel
Impeller housing/stator			Aluminum/aluminum
Venturi			Aluminum
Nozzle			Aluminum
Fuel tank			Polyethylene
Seat			Polyurethane/foam
N.A.: Not Available			

GTI 155 AND WAKE 155

MODEL			GTI 155 / WAKE 155
ENGINE			
Engine type			ROTAX® 1503 4-TEC™, 4-stroke, Single Over Head Camshaft (SOHC)
Induction			Naturally-aspirated
Number of cylinders			3
Number of valves			12 valves with hydraulic lifters (no adjustment)
Bore			100 mm (3.9 in)
Stroke			63.4 mm (2.5 in)
Displacement			1 493.8 cm^3 (91 in^3)
Compression ratio			10.6:1
Maximum RPM			7300 RPM
Lubrication		Type	Dry sump (2 oil pumps). Replaceable oil filter. Water-cooled oil cooler
		Oil type	XPS synthetic blend oil (summer grade) (P/N 293 600 121). Refer to *LUBRICATION SYSTEM* subsection
		Capacity	3 L (3.2 qt (U.S. liq.)) oil change w/filter 4.5 L (4.8 qt (U.S. liq.)) total
Intake valve opening			0° BTDC
Intake valve closing			50° ABDC
Exhaust valve opening			50° BBDC
Exhaust valve closing			0° ATDC
Valve stem diameter	Intake	New	5.961 mm to 5.975 mm (.2347 in to .2352 in)
		Wear limit	5.930 mm (.233 in)
	Exhaust	New	5.946 mm to 5.960 mm (.2341 in to .2346 in)
		Wear limit	5.930 mm (.233 in)
Valve guide diameter		New	5.994 mm to 6.018 mm (.236 in to .2369 in)
		Wear limit	6.060 mm (.2386 in)
Valve spring free length	Inner	New	41.02 mm (1.615 in)
		Wear limit	38.80 mm (1.528 in)
	Outer	New	45.45 mm (1.789 in)
		Wear limit	43.00 mm (1.693 in)
Valve seat contact width	Intake	New	1.10 mm to 1.30 mm (.043 in to .051 in)
		Wear limit	1.60 mm (.063 in)
	Exhaust	New	1.25 mm to 1.55 mm (.049 in to .061 in)
		Wear limit	1.80 mm (.071 in)
Rocker arm inner diameter		New	20.007 mm to 20.020 mm (.7877 in to .7882 in)
		Wear limit	20.050 mm (.7894 in)
Rocker arm shaft diameter		New	19.980 mm to 19.993 mm (.7866 in to .7871 in)
		Wear limit	19.970 mm (.7862 in)
Cylinder head maximum warpage		Service limit	0.15 mm (.006 in)

MODEL			GTI 155 / WAKE 155
ENGINE (cont'd)			
Cylinder head maximum warpage		Service limit	0.15 mm (.006 in)
Piston ring type		1st	Upper compression ring, rectangular
		2nd	Lower compression ring, tapered face
		3rd	Oil scraper ring
Ring end gap	Rectangular	New	0.30 mm to 0.50 mm (.012 in to .02 in)
	Taper-face	New	0.35 mm to 0.55 mm (.014 in to .022 in)
	Oil scraper ring	New	0.35 mm to 0.50 mm (.014 in to .02 in)
	All	Wear limit	1.50 mm (.059 in)
Ring/piston groove clearance	Rectangular	New	0.025 mm to 0.070 mm (.001 in to .003 in)
	Taper-face	New	0.015 mm to 0.06 mm (.0006 in to .0024 in)
	Oil scraper ring	New	0.020 mm to 0.055 mm (.001 in to .002 in)
	All	Wear limit	0.15 mm (.006 in)
Piston/cylinder wall clearance		New	0.024 mm to 0.056 mm (.0009 in to .0022 in)
		Wear limit	0.100 mm (.0039 in)
Cylinder taper		Wear limit	0.100 mm (.0039 in)
Cylinder out of round (maximum)			0.015 mm (.0006 in)
Camshaft bearing journal diameter	Front	New	24.939 mm to 24.960 mm (.9819 in to .9827 in)
		Wear limit	24.910 mm (.9807 in)
	PTO and center	New	39.892 mm to 39.905 mm (1.5706 in to 1.5711 in)
		Wear limit	39.880 mm (1.5701 in)
Camshaft bearing inner diameter	Front	New	25.000 mm to 25.013 mm (.9843 in to .9848 in)
		Wear limit	25.050 mm (.9862 in)
	PTO and center	New	40.000 mm to 40.020 mm (1.5748 in to 1.5756 in)
		Wear limit	40.050 mm (1.5768 in)
Cam lobe height	Intake	New	31.540 mm to 31.740 mm (1.2417 in to 1.2496 in)
		Wear limit	31.50 mm (1.2402 in)
	Exhaust	New	31.430 mm to 31.630 mm (1.2374 in to 1.2453 in)
		Wear limit	31.380 mm (1.2354 in)
Crankshaft deflection		Maximum	0.05 mm (.002 in)
Crankshaft axial clearance		New	0.080 mm to 0.220 mm (.0031 in to .0087 in)
		Wear limit	0.35 mm (.014 in)
Crankshaft bearing journal diameter		New	49.991 mm to 50.000 mm (1.9681 in to 1.9685 in)
		Wear limit	49.950 mm (1.9665 in)
Crankshaft radial clearance		Wear limit	0.07 mm (.0028 in)
Connecting rod big end diameter		Service limit	45.080 mm (1.7748 in)
Connecting rod big end radial play		Service limit	0.090 mm (.0035 in)
Connecting rod big end axial play		New	0.100 mm to 0.352 mm (.004 in to .014 in)
		Wear limit	0.500 mm (.0197 in)
Connecting rod small end diameter		New	23.010 mm to 23.020 mm (.9059 in to .9063 in)
		Wear limit	23.070 mm (.9083 in)
Connecting rod small end radial play		Wear limit	0.080 mm (.0031 in)

MODEL			GTI 155 / WAKE 155
ENGINE (cont'd)			
Piston pin diameter		New	22.996 mm to 23.000 mm (.9054 in to .9055 in)
		Wear limit	22.990 mm (.9051 in)
Balance shaft journal diameter		New	31.984 mm to 32.000 mm (1.2592 in to 1.2598 in)
		Wear limit	31.950 mm (1.2579 in)
Balance shaft radial clearance		Wear limit	0.070 mm (.0028 in)
Balance shaft axial clearance		New	0.020 mm to 0.250 mm (.0008 in to .0098 in)
Supercharger shaft driven plate journal depth		New	N.A.
		Wear limit	N.A.
Supercharger drive gear thickness		New	N.A.
		Wear limit	N.A.
Supercharger lock washer thickness		New	N.A.
		Wear limit	N.A.
Supercharger spring washer package height (not compressed)		New	N.A.
		Wear limit	N.A.
AIR INTAKE SYSTEM			
Intake spark arrester			Tubular, wire screen
COOLING SYSTEM			
Type			Closed loop cooling system
Coolant			Ethylene-glycol and distilled water (50%/50%). Use premix coolant from BRP or a coolant specially formulated for aluminum engines
Cooling system capacity			5.5 L (5.8 qt (U.S. liq.)) total
Thermostat			87°C (189°F)
Monitoring beeper setting			100°C (212°F)
EXHAUST SYSTEM			
Type			D-Sea-Bel sound reduction system. Water cooled/water injected (open loop). Direct flow from jet pump
Water injection in muffler			3 x 3.5 mm (.138 in) on exhaust pipe and 1 x 3.5 mm (.138 in) on muffler
FUEL SYSTEM			
Fuel injection type			Multipoint fuel injection with iTC (intelligent Throttle Control). Single throttle body (62 mm) with an actuator
Fuel pressure			386 kPa to 414 kPa (56 PSI to 60 PSI)
Fuel injector		Quantity	3
Fuel type	Inside North America ((RON + MON)/2)		87 or higher
	Outside North America (RON)		92 or higher
Fuel tank (including reserve)			60 L (15.9 U.S. gal.)
Fuel tank reserve (from low level signal)			approx. 12 L (3.2 U.S. gal.)
Idle speed			1800 ± 50 RPM (not adjustable)

MODEL			GTI 155 / WAKE 155
ELECTRICAL SYSTEM			
Magneto generator output			360 W @ 6000 RPM
Stator			0.1 to 1.0 Ω
Battery			12 V, 30 A•h
Anti-start system			D.E.S.S. (Digitally Encoded Security System) with selectable maximum vehicle speed settings for RK (rental key) and LK (learning key)
Ignition system type			IDI (Inductive Discharge Ignition)
Ignition timing			Variable (electronically controlled)
Spark plug		Make and type	NGK DCPR8E
		Gap	0.7 mm to 0.8 mm (.028 in to .031 in)
Ignition coil		Primary	0.85 to 1.15 Ω
		Secondary	9.5 to 13.5 KΩ
Engine speed limiter setting			7750 RPM
Fuse box	#1: iBR control		5 A
	#2: Diagnostic connector		15 A
	#3: START/STOP		3 A
	#4: Gauge constant power		3 A
	#5: power		30 A
	#6: Voltage rectifier/regulator		30 A
	#8: Relay, fuses 2, 3 and 4		30 A
	#12: O.T.A.S., gauge start up and CAPS		3 A
	#13: Inj/Ign cyl 1		10 A
	#14: Inj/Ign cyl 2		10 A
	#15: Inj/Ign cyl 3		10 A
	#16: Starter solenoid		5 A
	#18: Fuel pump		10 A
	#19: ECM power		15 A
STEERING AND PROPULSION			
Steering			Fixed column
Steering nozzle pivoting angle			20°
O.T.A.S. (Off-Throttle Assisted Steering)			Electronically-controlled
Jet pump		Type	Axial flow single stage
		Grease type	Jet pump bearing grease (P/N 293 550 032)
Impeller		Rotation (seen from rear)	Counterclockwise
		Pitch	11°/18°
		Outside diameter	155.5 mm ± 0.06 mm (6.122 in ± .002 in)
Impeller/wear ring clearance		New	0 mm to 0.23 mm (0 in to .009 in)
		Wear limit	0.35 mm (.0138 in)
Impeller shaft		End play (new)	0
		Side play	0
Drive shaft		Coupling type	Crowned splines, direct drive
		Deflection (max.)	0.5 mm (.02 in)
Minimum required water level for propulsion system			90 cm (3 ft) underneath the lowest rear portion of hull

MODEL		GTI 155 / WAKE 155
iBR and VTS		
Description		Intelligent Brake and Reverse activated by a LH lever. Electronically-controlled iBR gate to provide brake, reverse, neutral and forward position
Gate angle (from horizontal line of watercraft)	Forward	Approx. from +8° to -4°
	Neutral	Approx. -52°
	Braking	Approx. -70°
	Reverse	Approx. from -52° to -70°
VTS system		Yes
VTS range angle		Approx. from +8° to -4°
Actuator		12 V, 80 A max. capacity. Reversible PWM (pulse-width modulation) motor
WEIGHT AND LOADING CAPACITY		
Dry weight	GTI 155	343 kg (755 lb)
	WAKE 155	348 kg (765 lb)
Number of passenger (driver incl.)		3
Load limit (passenger and 10 kg (22 lb) luggage)		272 kg (600 lb)
DIMENSIONS		
Overall length		336.8 cm (132.6 in)
Overall width		123.1 cm (48.5 in)
Overall height		111.8 cm (44 in)
MATERIALS		
Hull		Composite fiberglass
Inlet grate		Aluminum
Steering cover		Thermoplastic
Impeller material		Stainless steel
Impeller housing/stator		Aluminum/aluminum
Venturi		Aluminum
Nozzle		Aluminum
Fuel tank		Polyethylene
Seat		Polyurethane/foam
N.A.: Not Available		

GTR 215

MODEL			GTR 215
ENGINE			
Engine type			ROTAX® 1503 4-TEC™, 4-stroke, Single Over Head Camshaft (SOHC)
Induction			Supercharged intercooled
Number of cylinders			3
Number of valves			12 valves with hydraulic lifters (no adjustment)
Bore			100 mm (3.9 in)
Stroke			63.4 mm (2.5 in)
Displacement			1 493.8 cm^3 (91 in^3)
Compression ratio			8.4:1
Maximum RPM			8000 RPM
Lubrication		Type	Dry sump (2 oil pumps). Replaceable oil filter. Water-cooled oil cooler
		Oil type	XPS synthetic blend oil (summer grade) (P/N 293 600 121). Refer to *LUBRICATION SYSTEM* subsection
		Capacity	3 L (3.2 qt (U.S. liq.)) oil change w/filter 4.5 L (4.8 qt (U.S. liq.)) tota
Intake valve opening			0° BTDC
Intake valve closing			50° ABDC
Exhaust valve opening			50° BBDC
Exhaust valve closing			0° ATDC
Valve stem diameter	Intake	New	5.961 mm to 5.975 mm (.2347 in to .2352 in)
		Wear limit	5.930 mm (.233 in)
	Exhaust	New	5.946 mm to 5.960 mm (.2341 in to .2346 in)
		Wear limit	5.930 mm (.233 in)
Valve guide diameter		New	5.994 mm to 6.018 mm (.236 in to .2369 in)
		Wear limit	6.060 mm (.2386 in)
Valve spring free length	Inner	New	41.02 mm (1.615 in)
		Wear limit	38.80 mm (1.528 in)
	Outer	New	45.45 mm (1.789 in)
		Wear limit	43.00 mm (1.693 in)
Valve seat contact width	Intake	New	1.10 mm to 1.30 mm (.043 in to .051 in)
		Wear limit	1.60 mm (.063 in)
	Exhaust	New	1.25 mm to 1.55 mm (.049 in to .061 in)
		Wear limit	1.80 mm (.071 in)
Rocker arm inner diameter		New	20.007 mm to 20.020 mm (.7877 in to .7882 in)
		Wear limit	20.050 mm (.7894 in)
Rocker arm shaft diameter		New	19.980 mm to 19.993 mm (.7866 in to .7871 in)
		Wear limit	19.970 mm (.7862 in)
Cylinder head maximum warpage		Service limit	0.15 mm (.006 in)
Piston ring type		1st	Upper compression ring, rectangular
		2nd	Lower compression ring, tapered face
		3rd	Oil scraper ring

MODEL			GTR 215
ENGINE (cont'd)			
Ring end gap	Rectangular	New	0.30 mm to 0.50 mm (.012 in to .02 in)
	Taper-face	New	0.35 mm to 0.55 mm (.014 in to .022 in)
	Oil scraper ring	New	0.35 mm to 0.50 mm (.014 in to .02 in)
	All	Wear limit	1.50 mm (.059 in)
Ring/piston groove clearance	Rectangular	New	0.025 mm to 0.070 mm (.001 in to .003 in)
	Taper-face	New	0.015 mm to 0.06 mm (.0006 in to .0024 in)
	Oil scraper ring	New	0.020 mm to 0.055 mm (.001 in to .002 in)
	All	Wear limit	0.15 mm (.006 in)
Piston/cylinder wall clearance		New	0.04 mm to 0.08 mm (.0016 in to .0031 in)
		Wear limit	0.100 mm (.0039 in)
Cylinder taper		Wear limit	0.100 mm (.0039 in)
Cylinder out of round (maximum)			0.015 mm (.0006 in)
Camshaft bearing journal diameter	Front	New	24.939 mm to 24.960 mm (.9819 in to .9827 in)
		Wear limit	24.910 mm (.9807 in)
	PTO and center	New	39.892 mm to 39.905 mm (1.5706 in to 1.5711 in)
		Wear limit	39.880 mm (1.5701 in)
Camshaft bearing inner diameter	Front	New	25.000 mm to 25.013 mm (.9843 in to .9848 in)
		Wear limit	25.050 mm (.9862 in)
	PTO and center	New	40.000 mm to 40.020 mm (1.5748 in to 1.5756 in)
		Wear limit	40.050 mm (1.5768 in)
Cam lobe height	Intake	New	31.540 mm to 31.740 mm (1.2417 in to 1.2496 in)
		Wear limit	31.50 mm (1.2402 in)
	Exhaust	New	31.430 mm to 31.630 mm (1.2374 in to 1.2453 in)
		Wear limit	31.380 mm (1.2354 in)
Crankshaft deflection		Maximum	0.05 mm (.002 in)
Crankshaft axial clearance		New	0.080 mm to 0.220 mm (.0031 in to .0087 in)
		Wear limit	0.35 mm (.014 in)
Crankshaft bearing journal diameter		New	49.991 mm to 50.000 mm (1.9681 in to 1.9685 in)
		Wear limit	49.950 mm (1.9665 in)
Crankshaft radial clearance		Wear limit	0.07 mm (.0028 in)
Connecting rod big end diameter		Service limit	45.080 mm (1.7748 in)
Connecting rod big end radial play		Service limit	0.090 mm (.0035 in)
Connecting rod big end axial play		New	0.100 mm to 0.352 mm (.004 in to .014 in)
		Wear limit	0.500 mm (.0197 in)
Connecting rod small end diameter		New	23.010 mm to 23.020 mm (.9059 in to .9063 in)
		Wear limit	23.070 mm (.9083 in)
Connecting rod small end radial play		Wear limit	0.080 mm (.0031 in)
Piston pin diameter		New	22.996 mm to 23.000 mm (.9054 in to .9055 in)
		Wear limit	22.990 mm (.9051 in)
Balance shaft journal diameter		New	31.984 mm to 32.000 mm (1.2592 in to 1.2598 in)
		Wear limit	31.950 mm (1.2579 in)
Balance shaft radial clearance		Wear limit	0.070 mm (.0028 in)
Balance shaft axial clearance		New	0.020 mm to 0.250 mm (.0008 in to .0098 in)

MODEL			GTR 215
ENGINE (cont'd)			
Supercharger shaft driven plate journal depth		New	14.460 mm to 14.500 mm (.5693 in to .5709 in)
		Wear limit	14.600 mm (.5748 in)
Supercharger drive gear thickness		New	11.000 mm to 11.050 mm (.4331 in to .435 in)
		Wear limit	10.900 mm (.4291 in)
Supercharger lock washer thickness		New	4.050 mm to 4.150 mm (.1594 in to .1634 in)
		Wear limit	3.950 mm (.1555 in)
Supercharger spring washer package height (not compressed)		New	10.900 mm to 10.700 mm (.4291 in to .4213 in)
		Wear limit	10.200 mm (.4016 in)
AIR INTAKE SYSTEM			
Intake spark arrester			Tubular, wire screen
COOLING SYSTEM			
Type			Closed loop cooling system
Coolant			Ethylene-glycol and distilled water (50%/50%). Use premix coolant from BRP or a coolant specially formulated for aluminum engines
Cooling system capacity			5.5 L (5.8 qt (U.S. liq.)) total
Thermostat			87°C (189°F)
Monitoring beeper setting			100°C (212°F)
EXHAUST SYSTEM			
Type			D-Sea-Bel sound reduction system. Water cooled/water injected (open loop). Direct flow from jet pump
Water injection in muffler			3 x 3.5 mm (.138 in) on exhaust pipe and 1 x 3.5 mm (.138 in) on muffler
FUEL SYSTEM			
Fuel injection type			Multipoint fuel injection with iTC (intelligent Throttle Control). Single throttle body (62 mm) with an actuator
Fuel pressure			386 kPa to 414 kPa (56 PSI to 60 PSI)
Fuel injector		Quantity	3
Fuel type	Inside North America ((RON + MON)/2)		91 or higher
	Outside North America (RON)		95 or higher
Fuel tank (including reserve)			60 L (16 U.S. gal.)
Fuel tank reserve (from low level signal)			approx. 12 L (3.2 U.S. gal.)
Idle speed			1800 ± 50 RPM (not adjustable)

MODEL			GTR 215
ELECTRICAL SYSTEM			
Magneto generator output			360 W @ 6000 RPM
Stator			0.1 to 1.0 Ω
Battery			12 V, 30 A•h
Anti-start system			D.E.S.S. (Digitally Encoded Security System) with selectable maximum vehicle speed settings for RK (rental key) and LK (learning key)
Ignition system type			IDI (Inductive Discharge Ignition)
Ignition timing			Variable (electronically controlled)
Spark plug		Make and type	NGK DCPR8E
		Gap	0.7 mm to 0.8 mm (.028 in to .031 in)
Ignition coil		Primary	0.85 to 1.15 Ω
		Secondary	9.5 to 13.5 KΩ
Engine speed limiter setting			8300 RPM
Fuse box	#1: iBR control		5 A
	#2: Diagnostic connector		15 A
	#3: START/STOP		3 A
	#4: Gauge constant power		3 A
	#5: iBR power		30 A
	#6: Voltage rectifier/regulator		30 A
	#7: iS power		30 A
	#8: IFuses 2, 3, 4 and relay		30 A
	#11: Depth sounder		3 A
	#12 O.T.A.S., Gauge start up, CAPS		3 A
	#13: Inj/Ign cyl 1		10 A
	#14: Inj/Ign cyl 2		10 A
	#15: Inj/Ign cyl 3		10 A
	#16: Starter solenoid		5 A
	#17: iBR control		5 A
	#18: Fuel pump		10 A
	#19: ECM power		15 A

MODEL		GTR 215
STEERING AND PROPULSION		
Steering		Adjustable 4 positions
Steering nozzle pivoting angle		26°
O.T.A.S. (Off-Throttle Assisted Steering)		Electronically-controlled
Jet pump	Type	Axial flow single stage
	Grease type	Jet pump bearing grease (P/N 293 550 032)
Impeller	Rotation (seen from rear)	Counterclockwise
	Pitch	10°/21°
	Outside diameter	159 mm ± 0.06 mm (6.26 in ± .002 in)
Impeller/wear ring clearance	New	0 mm to 0.23 mm (0 in to .009 in)
	Wear limit	0.35 mm (.0138 in)
Impeller shaft	End play (new)	0
	Side play	0
Drive shaft	Coupling type	Crowned splines, direct drive
	Deflection (max.)	0.5 mm (.02 in)
Minimum required water level for propulsion system		90 cm (3 ft) underneath the lowest rear portion of hull
iBR and VTS		
Description		Intelligent Brake and Reverse activated by a LH lever. Electronically-controlled iBR gate to provide brake, reverse, neutral and forward position
Gate angle (from horizontal line of watercraft)	Forward	Approx. from +8° to -4°
	Neutral	Approx. -52°
	Braking	Approx. -70°
	Reverse	Approx. from -52° to -70°
VTS system		Yes
VTS range angle		8° up, -4° down
Actuator		12 V, 80 A max. capacity. Reversible PWM (pulse-width modulation) motor
WEIGHT AND LOADING CAPACITY		
Dry weight		348 kg (765 lb)
Number of passenger (driver incl.)		3
Load limit (passenger and 10 kg (22 lb) luggage)		272 kg (600 lb)
DIMENSIONS		
Overall length		336.8 cm (133 in)
Overall width		123.1 cm (48 in)
Overall height		111.8 cm (44.02 in)
Overall height with keel horizontal, suspension extended		N.A.
Overall height with keel horizontal, suspension collapsed		N.A.

MODEL	GTR 215
MATERIALS	
Hull	Composite fiberglass
Inlet grate	Aluminum
Steering cover	Thermoplastic
Impeller material	Stainless steel
Impeller housing/stator	Aluminum/aluminum
Venturi	Aluminum
Nozzle	Aluminum
Fuel tank	Polyethylene
Seat	Polyurethane/foam
N.A.: Not Available	

GTX 155/215/260

MODEL			GTX 155 / GTX S 155 / GTX 215 / GTX LTD iS 260
ENGINE			
Engine type			ROTAX® 1503 4-TEC™, 4-stroke, Single Over Head Camshaft (SOHC)
Induction		GTX 155	Naturally-aspirated
		GTX S 155	
		GTX 215	Supercharged intercooled
		GTX LTD iS 260	
Number of cylinders			3
Number of valves			12 valves with hydraulic lifters (no adjustment)
Bore			100 mm (3.9 in)
Stroke			63.4 mm (2.5 in)
Displacement			1 493.8 cm³ (91 in³)
Compression ratio		GTX 155	10.6:1
		GTX S 155	
		GTX 215	8.4:1
		GTX LTD iS 260	
Maximum RPM		GTX 155	7300 RPM
		GTX S 155	
		GTX 215	8000 RPM
		GTX LTD iS 260	
Lubrication		Type	Dry sump (2 oil pumps). Replaceable oil filter. Water-cooled oil cooler
		Oil type	XPS synthetic blend oil (summer grade) (P/N 293 600 121). Refer to *LUBRICATION SYSTEM* subsection
		Capacity	3 L (3.2 qt (U.S. liq.)) oil change w/filter 4.5 L (4.8 qt (U.S. liq.)) total
Intake valve opening			0° BTDC
Intake valve closing			50° ABDC
Exhaust valve opening			50° BBDC
Exhaust valve closing			0° ATDC
Valve stem diameter	Intake	New	5.961 mm to 5.975 mm (.2347 in to .2352 in)
		Wear limit	5.930 mm (.233 in)
	Exhaust	New	5.946 mm to 5.960 mm (.2341 in to .2346 in)
		Wear limit	5.930 mm (.233 in)
Valve guide diameter		New	5.994 mm to 6.018 mm (.236 in to .2369 in)
		Wear limit	6.060 mm (.2386 in)
Valve spring free length	Inner	New	41.02 mm (1.615 in)
		Wear limit	38.80 mm (1.528 in)
	Outer	New	45.45 mm (1.789 in)
		Wear limit	43.00 mm (1.693 in)

MODEL			GTX 155 / GTX S 155 / GTX 215 / GTX LTD iS 260
ENGINE (cont'd)			
Valve seat contact width	Intake	New	1.10 mm to 1.30 mm (.043 in to .051 in)
		Wear limit	1.60 mm (.063 in)
	Exhaust	New	1.25 mm to 1.55 mm (.049 in to .061 in)
		Wear limit	1.80 mm (.071 in)
Rocker arm inner diameter		New	20.007 mm to 20.020 mm (.7877 in to .7882 in)
		Wear limit	20.050 mm (.7894 in)
Rocker arm shaft diameter		New	19.980 mm to 19.993 mm (.7866 in to .7871 in)
		Wear limit	19.970 mm (.7862 in)
Cylinder head maximum warpage		Service limit	0.15 mm (.006 in)
Piston ring type		1st	Upper compression ring, rectangular
		2nd	Lower compression ring, tapered face
		3rd	Oil scraper ring
Ring end gap	Rectangular	New	0.30 mm to 0.50 mm (.012 in to .02 in)
	Taper-face	New	0.35 mm to 0.55 mm (.014 in to .022 in)
	Oil scraper ring	New	0.35 mm to 0.50 mm (.014 in to .02 in)
	All	Wear limit	1.50 mm (.059 in)
Ring/piston groove clearance	Rectangular	New	0.025 mm to 0.070 mm (.001 in to .003 in)
	Taper-face	New	0.015 mm to 0.06 mm (.0006 in to .0024 in)
	Oil scraper ring	New	0.020 mm to 0.055 mm (.001 in to .002 in)
	All	Wear limit	0.15 mm (.006 in)
Piston/cylinder wall clearance	New	GTX 155	0.024 mm to 0.056 mm (.0009 in to .0022 in)
		GTX S 155	
		GTX 215	0.04 mm to 0.08 mm (.0016 in to .0031 in)
		GTX LTD iS 260	
	Wear limit		0.100 mm (.0039 in)
Cylinder taper		Wear limit	0.100 mm (.0039 in)
Cylinder out of round (maximum)			0.015 mm (.0006 in)
Camshaft bearing journal diameter	Front	New	24.939 mm to 24.960 mm (.9819 in to .9827 in)
		Wear limit	24.910 mm (.9807 in)
	PTO and center	New	39.892 mm to 39.905 mm (1.5706 in to 1.5711 in)
		Wear limit	39.880 mm (1.5701 in)
Camshaft bearing inner diameter	Front	New	25.000 mm to 25.013 mm (.9843 in to .9848 in)
		Wear limit	25.050 mm (.9862 in)
	PTO and center	New	40.000 mm to 40.020 mm (1.5748 in to 1.5756 in)
		Wear limit	40.050 mm (1.5768 in)
Cam lobe height	Intake	New	31.540 mm to 31.740 mm (1.2417 in to 1.2496 in)
		Wear limit	31.50 mm (1.2402 in)
	Exhaust	New	31.430 mm to 31.630 mm (1.2374 in to 1.2453 in)
		Wear limit	31.380 mm (1.2354 in)
Crankshaft deflection		Maximum	0.05 mm (.002 in)

MODEL			GTX 155 / GTX S 155 / GTX 215 / GTX LTD iS 260
ENGINE (cont'd)			
Crankshaft axial clearance		New	0.080 mm to 0.220 mm (.0031 in to .0087 in)
		Wear limit	0.35 mm (.014 in)
Crankshaft bearing journal diameter		New	49.991 mm to 50.000 mm (1.9681 in to 1.9685 in)
		Wear limit	49.950 mm (1.9665 in)
Crankshaft radial clearance		Wear limit	0.07 mm (.0028 in)
Connecting rod big end diameter		Service limit	45.080 mm (1.7748 in)
Connecting rod big end radial play		Service limit	0.090 mm (.0035 in)
Connecting rod big end axial play		New	0.100 mm to 0.352 mm (.004 in to .014 in)
		Wear limit	0.500 mm (.0197 in)
Connecting rod small end diameter		New	23.010 mm to 23.020 mm (.9059 in to .9063 in)
		Wear limit	23.070 mm (.9083 in)
Connecting rod small end radial play		Wear limit	0.080 mm (.0031 in)
Piston pin diameter		New	22.996 mm to 23.000 mm (.9054 in to .9055 in)
		Wear limit	22.990 mm (.9051 in)
Balance shaft journal diameter		New	31.984 mm to 32.000 mm (1.2592 in to 1.2598 in)
		Wear limit	31.950 mm (1.2579 in)
Balance shaft radial clearance		Wear limit	0.070 mm (.0028 in)
Balance shaft axial clearance		New	0.020 mm to 0.250 mm (.0008 in to .0098 in)
Supercharger shaft driven plate journal depth	New	GTX 215	14.460 mm to 14.500 mm (.5693 in to .5709 in)
		GTX LTD iS 260	
	Wear limit	GTX 215	14.600 mm (.5748 in)
		GTX LTD iS 260	
Supercharger drive gear thickness	New	GTX 215	11.000 mm to 11.050 mm (.4331 in to .435 in)
		GTX LTD iS 260	
	Wear limit	GTX 215	10.900 mm (.4291 in)
		GTX LTD iS 260	
Supercharger lock washer thickness	New	GTX 215	4.050 mm to 4.150 mm (.1594 in to .1634 in)
		GTX LTD iS 260	
	Wear limit	GTX 215	3.950 mm (.1555 in)
		GTX LTD iS 260	
Supercharger spring washer package height (not compressed)	New	GTX 215	10.900 mm to 10.700 mm (.4291 in to .4213 in)
		GTX LTD iS 260	
	Wear limit	GTX 215	10.200 mm (.4016 in)
		GTX LTD iS 260	
AIR INTAKE SYSTEM			
Intake spark arrester			Tubular, wire screen

MODEL			GTX 155 / GTX S 155 / GTX 215 / GTX LTD iS 260
COOLING SYSTEM			
Type			Closed loop cooling system
Coolant			Ethylene-glycol and distilled water (50%/50%). Use premix coolant from BRP or a coolant specially formulated for aluminum engines
Cooling system capacity			5.5 L (5.8 qt (U.S. liq.)) total
Thermostat			87°C (189°F)
Monitoring beeper setting			100°C (212°F)
EXHAUST SYSTEM			
Type			D-Sea-Bel sound reduction system. Water cooled/water injected (open loop). Direct flow from jet pump
Water injection in muffler			3 x 3.5 mm (.138 in) on exhaust pipe and 1 x 3.5 mm (.138 in) on muffler
FUEL SYSTEM			
Fuel injection type			Multipoint fuel injection with iTC (intelligent Throttle Control). Single throttle body (62 mm) with an actuator
Fuel pressure			386 kPa to 414 kPa (56 PSI to 60 PSI)
Fuel injector		Quantity	3
Fuel type	Inside North America ((RON + MON)/2)	GTX 155	87 or higher
		GTX S 155	
		GTX 215	91 or higher
		GTX LTD iS 260	
	Outside North America (RON)	GTX 155	92 or higher
		GTX S 155	
		GTX 215	95 or higher
		GTX LTD iS 260	
Fuel tank (including reserve)		GTX 155	60 L (16 U.S. gal.)
		GTX S 155	70 L (18 U.S. gal.)
		GTX 215	60 L (16 U.S. gal.)
		GTX LTD iS 260	70 L (18 U.S. gal.)
Fuel tank reserve (from low level signal)		GTX 155	approx. 12 L (3.2 U.S. gal.)
		GTX S 155	approx. 14 L (3.7 U.S. gal.)
		GTX 215	approx. 12 L (3.2 U.S. gal.)
		GTX LTD iS 260	approx. 14 L (3.7 U.S. gal.)
Idle speed			1800 ± 50 RPM (not adjustable)

MODEL			GTX 155 / GTX S 155 / GTX 215 / GTX LTD iS 260
ELECTRICAL SYSTEM			
Magneto generator output			360 W @ 6000 RPM
Stator			0.1 to 1.0 Ω
Battery			12 V, 30 A•h
Anti-start system			D.E.S.S. (Digitally Encoded Security System) with selectable maximum vehicle speed settings for RK (rental key) and LK (learning key)
Ignition system type			IDI (Inductive Discharge Ignition)
Ignition timing			Variable (electronically controlled)
Spark plug		Make and type	NGK DCPR8E
		Gap	0.7 mm to 0.8 mm (.028 in to .031 in)
Ignition coil		Primary	0.85 to 1.15 Ω
		Secondary	9.5 to 13.5 KΩ
Engine speed limiter setting		GTX 155	7750 RPM
		GTX S 155	
		GTX 215	8300 RPM
		GTX LTD iS 260	
Fuse box	#1: iBR control		5 A
	#2: Diagnostic connector		15 A
	#3: START/STOP		3 A
	#4: Gauge constant power		3 A
	#5: iBR power		30 A
	#6: Voltage rectifier/regulator		30 A
	#7: iS power		30 A
	#8: IFuses 2, 3, 4 and relay		30 A
	#11: Depth sounder		3 A
	#12 O.T.A.S., Gauge start up, CAPS		3 A
	#13: Inj/Ign cyl 1		10 A
	#14: Inj/Ign cyl 2		10 A
	#15: Inj/Ign cyl 3		10 A
	#16: Starter solenoid		5 A
	#17: iBR control		5 A
	#18: Fuel pump		10 A
	#19: ECM power		15 A

MODEL			GTX 155 / GTX S 155 / GTX 215 / GTX LTD iS 260
STEERING AND PROPULSION			
Steering			Adjustable 4 positions
Steering nozzle pivoting angle			26°
O.T.A.S. (Off-Throttle Assisted Steering)			Electronically-controlled
Jet pump		Type	Axial flow single stage
		Grease type	Jet pump bearing grease (P/N 293 550 032)
Impeller	Rotation (seen from rear)		Counterclockwise
	Pitch	GTX 155	10°/21°
		GTX S 155	
		GTX 215	
		GTX LTD iS 260	14°/25°
	Outside diameter		159 mm ± 0.06 mm (6.26 in ± .002 in)
Impeller/wear ring clearance		New	0 mm to 0.23 mm (0 in to .009 in)
		Wear limit	0.35 mm (.0138 in)
Impeller shaft		End play (new)	0
		Side play	0
Drive shaft		Coupling type	Crowned splines, direct drive
		Deflection (max.)	0.5 mm (.02 in)
Minimum required water level for propulsion system			90 cm (3 ft) underneath the lowest rear portion of hull
iBR and VTS			
Description			Intelligent Brake and Reverse activated by a LH lever. Electronically-controlled iBR gate to provide brake, reverse, neutral and forward position
Gate angle (from horizontal line of watercraft)		Forward	Approx. from +8° to -4°
		Neutral	Approx. -52°
		Braking	Approx. -70°
		Reverse	Approx. from -52° to -70°
VTS system			Yes
VTS range angle			8° up, -4° down
Actuator			12 V, 80 A max. capacity. Reversible PWM (pulse-width modulation) motor
WEIGHT AND LOADING CAPACITY			
Dry weight		GTX 155	371 kg (816 lb)
		GTX S 155	436 kg (960 lb)
		GTX 215	375 kg (824 lb)
		GTX LTD iS 260	446 kg (980 lb)
Number of passenger (driver incl.)			3
Load limit (passenger and 10 kg (22 lb) luggage)		GTX 155	272 kg (600 lb)
		GTX S 155	227 kg (500 lb)
		GTX 215	272 kg (600 lb)
		GTX LTD iS 260	227 kg (500 lb)

MODEL		GTX 155 / GTX S 155 / GTX 215 / GTX LTD iS 260
DIMENSIONS		
Overall length		354 cm (139 in)
Overall width		122.4 cm (48 in)
Overall height	GTX 155	116.6 cm (45.91 in)
	GTX S 155	111.4 cm (43.9 in)
	GTX 215	116.6 cm (45.91 in)
	GTX LTD iS 260	111.4 cm (43.9 in)
Overall height with keel horizontal, suspension extended	GTX 155	N.A.
	GTX S 155	127.7 cm (50.3 in)
	GTX 215	N.A.
	GTX LTD iS 260	127.7 cm (50.3 in)
Overall height with keel horizontal, suspension collapsed	GTX 155	N.A.
	GTX S 155	115.8 cm (45.6 in)
	GTX 215	N.A.
	GTX LTD iS 260	115.8 cm (45.6 in)
MATERIALS		
Hull		Composite fiberglass
Inlet grate		Aluminum
Steering cover		Thermoplastic
Impeller material		Stainless steel
Impeller housing/stator		Aluminum/aluminum
Venturi		Aluminum
Nozzle		Aluminum
Fuel tank		Polyethylene
Seat		Polyurethane/foam
N.A.: Not Available		

RXT 260

MODEL			RXT 260 / RXT-X 260 / RXT-X 260 aS / RXT iS 260 / RXT X 260 RS / RXT X aS 260 RS
ENGINE			
Engine type			ROTAX® 1503 4-TEC™, 4-stroke, Single Over Head Camshaft (SOHC)
Induction			Supercharged intercooled
Number of cylinders			3
Number of valves			12 valves with hydraulic lifters (no adjustment)
Bore			100 mm (3.9 in)
Stroke			63.4 mm (2.5 in)
Displacement			1 493.8 cm^3 (91 in^3)
Compression ratio			8.4:1
Maximum RPM			8000 RPM
Lubrication		Type	Dry sump (2 oil pumps). Replaceable oil filter. Water-cooled oil cooler
		Oil type	XPS synthetic blend oil (summer grade) (P/N 293 600 121). Refer to *LUBRICATION SYSTEM* subsection
		Capacity	3 L (3.2 qt (U.S. liq.)) oil change w/filter 4.5 L (4.8 qt (U.S. liq.)) total
Intake valve opening			0° BTDC
Intake valve closing			50° ABDC
Exhaust valve opening			50° BBDC
Exhaust valve closing			0° ATDC
Valve stem diameter	Intake	New	5.961 mm to 5.975 mm (.2347 in to .2352 in)
		Wear limit	5.930 mm (.233 in)
	Exhaust	New	5.946 mm to 5.960 mm (.2341 in to .2346 in)
		Wear limit	5.930 mm (.233 in)
Valve guide diameter		New	5.994 mm to 6.018 mm (.236 in to .2369 in)
		Wear limit	6.060 mm (.2386 in)
Valve spring free length	Inner	New	41.02 mm (1.615 in)
		Wear limit	38.80 mm (1.528 in)
	Outer	New	45.45 mm (1.789 in)
		Wear limit	43.00 mm (1.693 in)
Valve seat contact width	Intake	New	1.10 mm to 1.30 mm (.043 in to .051 in)
		Wear limit	1.60 mm (.063 in)
	Exhaust	New	1.25 mm to 1.55 mm (.049 in to .061 in)
		Wear limit	1.80 mm (.071 in)
Rocker arm inner diameter		New	20.007 mm to 20.020 mm (.7877 in to .7882 in)
		Wear limit	20.050 mm (.7894 in)
Rocker arm shaft diameter		New	19.980 mm to 19.993 mm (.7866 in to .7871 in)
		Wear limit	19.970 mm (.7862 in)
Cylinder head maximum warpage		Service limit	0.15 mm (.006 in)

MODEL			RXT 260 / RXT-X 260 / RXT-X 260 aS / RXT iS 260 / RXT X 260 RS / RXT X aS 260 RS
ENGINE (cont'd)			
Piston ring type		1st	Upper compression ring, rectangular
		2nd	Lower compression ring, tapered face
		3rd	Oil scraper ring
Ring end gap	Rectangular	New	0.30 mm to 0.50 mm (.012 in to .02 in)
	Taper-face	New	0.35 mm to 0.55 mm (.014 in to .02 in)
	Oil scraper ring	New	0.35 mm to 0.50 mm (.014 in to .02 in)
	All	Wear limit	1.50 mm (.059 in)
Ring/piston groove clearance	Rectangular	New	0.025 mm to 0.070 mm (.001 in to .003 in)
	Taper-face	New	0.015 mm to 0.06 mm (.0006 in to .0024 in)
	Oil scraper ring	New	0.020 mm to 0.055 mm (.001 in to .002 in)
	All	Wear limit	0.15 mm (.006 in)
Piston/cylinder wall clearance		New	0.04 mm to 0.08 mm (.0016 in to .0031 in)
		Wear limit	0.100 mm (.0039 in)
Cylinder taper		Wear limit	0.100 mm (.0039 in)
Cylinder out of round (maximum)			0.015 mm (.0006 in)
Camshaft bearing journal diameter	Front	New	24.939 mm to 24.960 mm (.9819 in to .9827 in)
		Wear limit	24.910 mm (.9807 in)
	PTO and center	New	39.892 mm to 39.905 mm (1.5706 in to 1.5711 in)
		Wear limit	39.880 mm (1.5701 in)
Camshaft bearing inner diameter	Front	New	25.000 mm to 25.013 mm (.9843 in to .9848 in)
		Wear limit	25.050 mm (.9862 in)
	PTO and center	New	40.000 mm to 40.020 mm (1.5748 in to 1.5756 in)
		Wear limit	40.050 mm (1.5768 in)
Cam lobe height	Intake	New	31.540 mm to 31.740 mm (1.2417 in to 1.2496 in)
		Wear limit	31.50 mm (1.2402 in)
	Exhaust	New	31.430 mm to 31.630 mm (1.2374 in to 1.2453 in)
		Wear limit	31.380 mm (1.2354 in)
Crankshaft deflection		Maximum	0.05 mm (.002 in)
Crankshaft axial clearance		New	0.080 mm to 0.220 mm (.0031 in to .0087 in)
		Wear limit	0.35 mm (.014 in)
Crankshaft bearing journal diameter		New	49.991 mm to 50.000 mm (1.9681 in to 1.9685 in)
		Wear limit	49.950 mm (1.9665 in)
Crankshaft radial clearance		Wear limit	0.07 mm (.0028 in)
Connecting rod big end diameter		Service limit	45.080 mm (1.7748 in)
Connecting rod big end radial play		Service limit	0.090 mm (.0035 in)
Connecting rod big end axial play		New	0.100 mm to 0.352 mm (.004 in to .014 in)
		Wear limit	0.500 mm (.0197 in)
Connecting rod small end diameter		New	23.010 mm to 23.020 mm (.9059 in to .9063 in)
		Wear limit	23.070 mm (.9083 in)
Connecting rod small end radial play		Wear limit	0.080 mm (.0031 in)

MODEL			RXT 260 / RXT-X 260 / RXT-X 260 aS / RXT iS 260 / RXT X 260 RS / RXT X aS 260 RS
ENGINE (cont'd)			
Piston pin diameter		New	22.996 mm to 23.000 mm (.9054 in to .9055 in)
		Wear limit	22.990 mm (.9051 in)
Balance shaft journal diameter		New	31.984 mm to 32.000 mm (1.2592 in to 1.2598 in)
		Wear limit	31.950 mm (1.2579 in)
Balance shaft radial clearance		Wear limit	0.070 mm (.0028 in)
Balance shaft axial clearance		New	0.020 mm to 0.250 mm (.0008 in to .0098 in)
Supercharger shaft driven plate journal depth		New	14.460 mm to 14.500 mm (.5693 in to .5709 in)
		Wear limit	14.600 mm (.5748 in)
Supercharger drive gear thickness		New	11.000 mm to 11.050 mm (.4331 in to .435 in)
		Wear limit	10.900 mm (.4291 in)
Supercharger lock washer thickness		New	4.050 mm to 4.150 mm (.1594 in to .1634 in)
		Wear limit	3.950 mm (.1555 in)
Supercharger spring washer package height (not compressed)		New	10.900 mm to 10.700 mm (.4291 in to .4213 in)
		Wear limit	10.200 mm (.4016 in)
AIR INTAKE SYSTEM			
Intake spark arrester			Tubular, wire screen
COOLING SYSTEM			
Type			Closed loop cooling system
Coolant			Ethylene-glycol and distilled water (50%/50%). Use premix coolant from BRP or a coolant specially formulated for aluminum engines
Cooling system capacity			5.5 L (5.8 qt (U.S. liq.)) total
Thermostat			87°C (189°F)
Monitoring beeper setting			100°C (212°F)
EXHAUST SYSTEM			
Type			D-Sea-Bel sound reduction system. Water cooled/water injected (open loop). Direct flow from jet pump
Water injection in muffler			3 x 3.5 mm (.138 in) on exhaust pipe and 1 x 3.5 mm (.138 in) on muffler
FUEL SYSTEM			
Fuel injection type			Multipoint fuel injection with iTC (intelligent Throttle Control). Single throttle body (62 mm) with an actuator
Fuel pressure			386 kPa to 414 kPa (56 PSI to 60 PSI)
Fuel injector		Quantity	3
Fuel type	Inside North America ((RON + MON)/2)		91 or higher
	Outside North America (RON)		95 or higher
Fuel tank (including reserve)		RXT 260	60 L (16 U.S. gal.)
		RXT X 260	
		RXT X aS	70 L (18 U.S. gal.)
		RXT X iS	
Fuel tank reserve (from low level signal)		RXT 260	Approx. 12 L (3.2 U.S. gal.)
		RXT X 260	
		RXT X aS	Approx. 14 L (3.7 U.S. gal.)
		RXT X iS	
Idle speed			1800 ± 50 RPM (not adjustable)

MODEL			RXT 260 / RXT-X 260 / RXT-X 260 aS / RXT iS 260 / RXT X 260 RS / RXT X aS 260 RS
ELECTRICAL SYSTEM			
Magneto generator output			360 W @ 6000 RPM
Stator			0.1 to 1.0 Ω
Battery			12 V, 30 A•h
Anti-start system			D.E.S.S. (Digitally Encoded Security System) with selectable maximum vehicle speed settings for RK (rental key) and LK (learning key)
Ignition system type			IDI (Inductive Discharge Ignition)
Ignition timing			Variable (electronically controlled)
Spark plug		Make and type	NGK DCPR8E
		Gap	0.7 mm to 0.8 mm (.028 in to .031 in)
Ignition coil		Primary	0.85 to 1.15 Ω
		Secondary	9.5 to 13.5 KΩ
Engine speed limiter setting			8300 RPM
Fuse box	#1: iBR control		5 A
	#2: Diagnostic connector		15 A
	#3: START/STOP		3 A
	#4: Gauge constant power		3 A
	#5: iBR power		30 A
	#6: Voltage rectifier/regulator		30 A
	#7: iS power		30 A
	#8: IFuses 2, 3, 4 and relay		30 A
	#11: Depth sounder		3 A
	#12 O.T.A.S., Gauge start up, CAPS		3 A
	#13: Inj/Ign cyl 1		10 A
	#14: Inj/Ign cyl 2		10 A
	#15: Inj/Ign cyl 3		10 A
	#16: Starter solenoid		5 A
	#17: iBR control		5 A
	#18: Fuel pump		10 A
	#19: ECM power		15 A

MODEL			RXT 260 / RXT-X 260 / RXT-X 260 aS / RXT iS 260 / RXT X 260 RS / RXT X aS 260 RS
STEERING AND PROPULSION			
Steering		RXT 260	Adjustable 4 positions
		RXT X 260	Steering: Adjustable 4 positions Handlebar: -0.0 mm to +25 mm
		RXT X aS	
		RXT X iS	Adjustable 4 positions
Steering nozzle pivoting angle			26°
O.T.A.S. (Off-Throttle Assisted Steering)			Electronically-controlled. Achieved with the iBR gate and engine speed
Jet pump		Type	Axial flow single stage
		Grease type	Jet pump bearing grease (P/N 293 550 032)
Impeller	Rotation (seen from rear)		Counterclockwise
	Pitch	RXT 260	10°/21°
		RXT X 260	14°/25°
		RXT X aS	
		RXT X iS	
		RXT X 260 RS	
		RXT X aS 260 RS	
	Outside diameter		159 mm ± 0.06 mm (6.26 in ± .002 in)
Impeller/wear ring clearance		New	0 mm to 0.23 mm (0 in to .009 in)
		Wear limit	0.35 mm (.0138 in)
Impeller shaft		End play (new)	0
		Side play	0
Drive shaft		Coupling type	Crowned splines, direct drive
		Deflection (max.)	0.5 mm (.02 in)
Minimum required water level for propulsion system			90 cm (3 ft) underneath the lowest rear portion of hull
iBR and VTS			
Description			Intelligent Brake and Reverse activated by a LH lever. Electronically-controlled iBR gate to provide brake, reverse, neutral and forward position
Gate angle (from horizontal line of watercraft)		Forward	Approx. from +8° to -4°
		Neutral	Approx. -52°
		Braking	Approx. -70°
		Reverse	Approx. from -52° to -70°
VTS system			Electronically-controlled through the VTS control button with 2 preset positions
VTS range angle			8° up, -4° down
Actuator			12 V, 80 A max. capacity. Reversible PWM (pulse-width modulation) motor

MODEL		RXT 260 / RXT-X 260 / RXT-X 260 aS / RXT iS 260 / RXT X 260 RS / RXT X aS 260 RS
WEIGHT AND LOADING CAPACITY		
Dry weight	RXT 260	375 kg (824 lb)
	RXT X 260	379 kg (834 lb)
	RXT X aS	438 kg (965 lb)
	RXT X iS	441 kg (970 lb)
Number of passenger (driver incl.)		3
Load limit (passenger and 10 kg (22 lb) luggage)	RXT 260	272 kg (600 lb)
	RXT X 260	
	RXT X aS	227 kg (500 lb)
	RXT X iS	
DIMENSIONS		
Overall length		354 cm (139 in)
Overall width		122 cm (48 in)
Overall height	RXT 260	116.6 cm (45.91 in)
	RXT X 260	118 cm (46.5 in)
	RXT X aS	118.1 cm (46.5 in)
	RXT X iS	111.4 cm (43.9 in)
Overall height with keel horizontal, suspension extended	RXT 260	N.A.
	RXT X 260	N.A.
	RXT X aS	127.7 cm (50.3 in)
	RXT X iS	127.7 cm (50.3 in)
Overall height with keel horizontal, suspension collapsed	RXT 260	N.A.
	RXT X 260	N.A.
	RXT X aS	115.8 cm (45.6 in)
	RXT X iS	115.8 cm (45.6 in)
MATERIALS		
Hull		Composite fiberglass
Inlet grate		Aluminum
Steering cover		Thermoplastic
Impeller material		Stainless steel
Impeller housing/stator		Aluminum/aluminum
Venturi		Aluminum
Nozzle		Aluminum
Fuel tank		Polyethylene
Seat		Polyurethane/foam
N.A.: Not Available		

WAKE PRO 215

MODEL			WAKE PRO 215
ENGINE			
Engine type			ROTAX® 1503 4-TEC™, 4-stroke, Single Over Head Camshaft (SOHC)
Induction			Supercharged intercooled
Number of cylinders			3
Number of valves			12 valves with hydraulic lifters (no adjustment)
Bore			100 mm (3.9 in)
Stroke			63.4 mm (2.5 in)
Displacement			1 493.8 cm^3 (91 in^3)
Compression ratio			8.4:1
Maximum RPM			8000 RPM
Lubrication		Type	Dry sump (2 oil pumps). Replaceable oil filter. Water-cooled oil cooler
		Oil type	XPS synthetic blend oil (summer grade) (P/N 293 600 121). Refer to *LUBRICATION SYSTEM* subsection
		Capacity	3 L (3.2 qt (U.S. liq.)) oil change w/filter 4.5 L (4.8 qt (U.S. liq.)) total
Intake valve opening			0° BTDC
Intake valve closing			50° ABDC
Exhaust valve opening			50° BBDC
Exhaust valve closing			0° ATDC
Valve stem diameter	Intake	New	5.961 mm to 5.975 mm (.2347 in to .2352 in)
		Wear limit	5.930 mm (.233 in)
	Exhaust	New	5.946 mm to 5.960 mm (.2341 in to .2346 in)
		Wear limit	5.930 mm (.233 in)
Valve guide diameter		New	5.994 mm to 6.018 mm (.236 in to .2369 in)
		Wear limit	6.060 mm (.2386 in)
Valve spring free length	Inner	New	41.02 mm (1.615 in)
		Wear limit	38.80 mm (1.528 in)
	Outer	New	45.45 mm (1.789 in)
		Wear limit	43.00 mm (1.693 in)
Valve seat contact width	Intake	New	1.10 mm to 1.30 mm (.043 in to .051 in)
		Wear limit	1.60 mm (.063 in)
	Exhaust	New	1.25 mm to 1.55 mm (.049 in to .061 in)
		Wear limit	1.80 mm (.071 in)
Rocker arm inner diameter		New	20.007 mm to 20.020 mm (.7877 in to .7882 in)
		Wear limit	20.050 mm (.7894 in)
Rocker arm shaft diameter		New	19.980 mm to 19.993 mm (.7866 in to .7871 in)
		Wear limit	19.970 mm (.7862 in)
Cylinder head maximum warpage		Service limit	0.15 mm (.006 in)

MODEL			WAKE PRO 215
ENGINE (cont'd)			
Piston ring type		1st	Upper compression ring, rectangular
		2nd	Lower compression ring, tapered face
		3rd	Oil scraper ring
Ring end gap	Rectangular	New	0.30 mm to 0.50 mm (.012 in to .02 in)
	Taper-face	New	0.35 mm to 0.55 mm (.014 in to .022 in)
	Oil scraper ring	New	0.35 mm to 0.50 mm (.014 in to .02 in)
	All	Wear limit	1.50 mm (.059 in)
Ring/piston groove clearance	Rectangular	New	0.025 mm to 0.070 mm (.001 in to .003 in)
	Taper-face	New	0.015 mm to 0.06 mm (.0006 in to .0024 in)
	Oil scraper ring	New	0.020 mm to 0.055 mm (.001 in to .002 in)
	All	Wear limit	0.15 mm (.006 in)
Piston/cylinder wall clearance		New	0.04 mm to 0.08 mm (.0016 in to .0031 in)
		Wear limit	0.100 mm (.0039 in)
Cylinder taper		Wear limit	0.100 mm (.0039 in)
Cylinder out of round (maximum)			0.015 mm (.0006 in)
Camshaft bearing journal diameter	Front	New	24.939 mm to 24.960 mm (.9819 in to .9827 in)
		Wear limit	24.910 mm (.9807 in)
	PTO and center	New	39.892 mm to 39.905 mm (1.5706 in to 1.5711 in)
		Wear limit	39.880 mm (1.5701 in)
Camshaft bearing inner diameter	Front	New	25.000 mm to 25.013 mm (.9843 in to .9848 in)
		Wear limit	25.050 mm (.9862 in)
	PTO and center	New	40.000 mm to 40.020 mm (1.5748 in to 1.5756 in)
		Wear limit	40.050 mm (1.5768 in)
Cam lobe height	Intake	New	31.540 mm to 31.740 mm (1.2417 in to 1.2496 in)
		Wear limit	31.50 mm (1.2402 in)
	Exhaust	New	31.430 mm to 31.630 mm (1.2374 in to 1.2453 in)
		Wear limit	31.380 mm (1.2354 in)
Crankshaft deflection		Maximum	0.05 mm (.002 in)
Crankshaft axial clearance		New	0.080 mm to 0.220 mm (.0031 in to .0087 in)
		Wear limit	0.35 mm (.014 in)
Crankshaft bearing journal diameter		New	49.991 mm to 50.000 mm (1.9681 in to 1.9685 in)
		Wear limit	49.950 mm (1.9665 in)
Crankshaft radial clearance		Wear limit	0.07 mm (.0028 in)
Connecting rod big end diameter		Service limit	45.080 mm (1.7748 in)
Connecting rod big end radial play		Service limit	0.090 mm (.0035 in)
Connecting rod big end axial play		New	0.100 mm - 0.352 mm (.004 in - .014 in)
		Wear limit	0.500 mm (.0197 in)
Connecting rod small end diameter		New	23.010 mm to 23.020 mm (.9059 in to .9063 in)
		Wear limit	23.070 mm (.9083 in)

MODEL			WAKE PRO 215
ENGINE (cont'd)			
Connecting rod small end radial play		Wear limit	0.080 mm (.0031 in)
Piston pin diameter		New	22.996 mm to 23.000 mm (.9054 in to .9055 in)
		Wear limit	22.990 mm (.9051 in)
Balance shaft journal diameter		New	31.984 mm to 32.000 mm (1.2592 in to 1.2598 in)
		Wear limit	31.950 mm (1.2579 in)
Balance shaft radial clearance		Wear limit	0.070 mm (.0028 in)
Balance shaft axial clearance		New	0.020 mm to 0.250 mm (.0008 in to .0098 in)
Supercharger shaft driven plate journal depth		New	14.460 mm to 14.500 mm (.5693 in to .5709 in)
		Wear limit	14.600 mm (.5748 in)
Supercharger drive gear thickness		New	11.000 mm to 11.050 mm (.4331 in to .435 in)
		Wear limit	10.900 mm (.4291 in)
Supercharger lock washer thickness		New	4.050 mm to 4.150 mm (.1594 in to .1634 in)
		Wear limit	3.950 mm (.1555 in)
Supercharger spring washer package height (not compressed)		New	10.900 mm to 10.700 mm (.4291 in to .4213 in)
		Wear limit	10.200 mm (.4016 in)
AIR INTAKE SYSTEM			
Intake spark arrester			Tubular, wire screen
COOLING SYSTEM			
Type			Closed loop cooling system
Coolant			Ethylene-glycol and distilled water (50%/50%). Use premix coolant from BRP or a coolant specially formulated for aluminum engines
Cooling system capacity			5.5 L (5.8 qt (U.S. liq.)) total
Thermostat			87°C (189°F)
Monitoring beeper setting			100°C (212°F)
EXHAUST SYSTEM			
Type			D-Sea-Bel sound reduction system. Water cooled/water injected (open loop). Direct flow from jet pump
Water injection in muffler			3 x 3.5 mm (.138 in) on exhaust pipe and 1 x 3.5 mm (.138 in) on muffler
FUEL SYSTEM			
Fuel injection type			Multipoint fuel injection with iTC (intelligent Throttle Control). Single throttle body (62 mm) with an actuator
Fuel pressure			386 kPa to 414 kPa (56 PSI to 60 PSI)
Fuel injector		Quantity	3
Fuel type	Inside North America ((RON + MON)/2)		91 or higher
	Outside North America (RON)		95 or higher
Fuel tank (including reserve)			70 L (18 U.S. gal.)
Fuel tank reserve (from low level signal)			approx. 14 L (3.7 U.S. gal.)
Idle speed			1800 ± 50 RPM (not adjustable)

MODEL			WAKE PRO 215
ELECTRICAL SYSTEM			
Magneto generator output			360 W @ 6000 RPM
Stator			0.1 to 1.0 Ω
Battery			12 V, 30 A•h
Anti-start system			D.E.S.S. (Digitally Encoded Security System) with selectable maximum vehicle speed settings for RK (rental key) and LK (learning key)
Ignition system type			IDI (Inductive Discharge Ignition)
Ignition timing			Variable (electronically controlled)
Spark plug		Make and type	NGK DCPR8E
		Gap	0.7 mm to 0.8 mm (.028 in to .031 in)
Ignition coil		Primary	0.85 to 1.15 Ω
		Secondary	9.5 to 13.5 KΩ
Engine speed limiter setting			8300 RPM
Fuse box #1	#1: Gauge		3 A
	#2: CAPS		3 A
	#3: Depth sounder		3 A
	#4: Starter solenoid		5 A
	#5: iBR control		5 A
	#6: Fuel pump		10 A
	#7: Inj/Ign cyl 1		10 A
	#8: Inj/Ign cyl 2		10 A
	#9: Inj/Ign cyl 3		10 A
	#10: O.T.A.S. switch		3 A
	#11: iS control		Empty
Fuse box #2	Relay		30 A
	#15: Charging system		30 A
	#16: iS power		Empty
	#17: Batt power		30 A
	#18: iBR power		30 A
	#20: ECM		15 A
	#21: START/STOP switch		3 A
	#22: Diag connector		15 A
	#23: GPS		3 A
STEERING AND PROPULSION			
Steering			Adjustable 4 positions
Steering nozzle pivoting angle			26°
O.T.A.S. (Off-Throttle Assisted Steering)			Electronically-controlled. Achieved with the iBR gate and engine speed
Jet pump		Type	Axial flow single stage
		Grease type	Jet pump bearing grease (P/N 293 550 032)
Impeller		Rotation (seen from rear)	Counterclockwise
		Pitch	10°/21°
		Outside diameter	159 mm ± 0.06 mm (6.26 in ± .002 in)

MODEL		WAKE PRO 215
STEERING AND PROPULSION (cont'd)		
Impeller/wear ring clearance	New	0 mm to 0.23 mm (0 in to .009 in)
	Wear limit	0.35 mm (.0138 in)
Impeller shaft	End play (new)	0
	Side play	0
Drive shaft	Coupling type	Crowned splines, direct drive
	Deflection (max.)	0.5 mm (.02 in)
Minimum required water level for propulsion system		90 cm (3 ft) underneath the lowest rear portion of hull
iBR and VTS		
Description		Intelligent Brake and Reverse activated by a LH lever. Electronically-controlled iBR gate to provide brake, reverse, neutral and forward position
Gate angle (from horizontal line of watercraft)	Forward	Approx. from +8° to -4°
	Neutral	Approx. -52°
	Braking	Approx. -70°
	Reverse	Approx. from -52° to -70°
VTS system		Electronically-controlled through the VTS control button
VTS range angle		8° up, -4° down
Actuator		12 V, 80 A max. capacity. Reversible PWM (pulse-width modulation) motor
WEIGHT AND LOADING CAPACITY		
Dry weight		379 kg (834 lb)
Number of passenger (driver incl.)		3
Load limit (passenger and 10 kg (22 lb) luggage)		272 kg (600 lb)
DIMENSIONS		
Overall length		354 cm (139 in)
Overall width		122 cm (48 in)
Overall height		116.6 cm (45.91 in)
MATERIALS		
Hull		Composite fiberglass
Inlet grate		Aluminum
Steering cover		Thermoplastic
Impeller material		Stainless steel
Impeller housing/stator		Aluminum/aluminum
Venturi		Aluminum
Nozzle		Aluminum
Fuel tank		Polyethylene
Seat		Polyurethane/foam

RXP 260

MODEL			RXP X 260 / RXP X 260 RS
ENGINE			
Engine type			ROTAX® 1503 4-TEC™, 4-stroke, Single Over Head Camshaft (SOHC)
Induction			Supercharged intercooled
Number of cylinders			3
Number of valves			12 valves with hydraulic lifters (no adjustment)
Bore			100 mm (3.9 in)
Stroke			63.4 mm (2.5 in)
Displacement			1 493.8 cm³ (91 in³)
Compression ratio			8.4:1
Maximum RPM			8000 RPM
Lubrication		Type	Dry sump (2 oil pumps). Replaceable oil filter. Water-cooled oil cooler
		Oil type	XPS synthetic blend oil (summer grade) (P/N 293 600 121). Refer to *LUBRICATION SYSTEM* subsection
		Capacity	3 L (3.2 qt (U.S. liq.)) oil change w/filter 4.5 L (4.8 qt (U.S. liq.)) total
Intake valve opening			0° BTDC
Intake valve closing			50° ABDC
Exhaust valve opening			50° BBDC
Exhaust valve closing			0° ATDC
Valve stem diameter	Intake	New	5.961 mm to 5.975 mm (.2347 in to .2352 in)
		Wear limit	5.930 mm (.233 in)
	Exhaust	New	5.946 mm to 5.960 mm (.2341 in to .2346 in)
		Wear limit	5.930 mm (.233 in)
Valve guide diameter		New	5.994 mm to 6.018 mm (.236 in to .2369 in)
		Wear limit	6.060 mm (.2386 in)
Valve spring free length	Inner	New	41.02 mm (1.615 in)
		Wear limit	38.80 mm (1.528 in)
	Outer	New	45.45 mm (1.789 in)
		Wear limit	43.00 mm (1.693 in)
Valve seat contact width	Intake	New	1.10 mm to 1.30 mm (.043 in to .051 in)
		Wear limit	1.60 mm (.063 in)
	Exhaust	New	1.25 mm to 1.55 mm (.049 in to .061 in)
		Wear limit	1.80 mm (.071 in)
Rocker arm inner diameter		New	20.007 mm to 20.020 mm (.7877 in to .7882 in)
		Wear limit	20.050 mm (.7894 in)
Rocker arm shaft diameter		New	19.980 mm to 19.993 mm (.7866 in to .7871 in)
		Wear limit	19.970 mm (.7862 in)
Cylinder head maximum warpage		Service limit	0.15 mm (.006 in)

MODEL			RXP X 260 / RXP X 260 RS
ENGINE (cont'd)			
Piston ring type		1st	Upper compression ring, rectangular
		2nd	Lower compression ring, tapered face
		3rd	Oil scraper ring
Ring end gap	Rectangular	New	0.30 mm to 0.50 mm (.012 in to .02 in)
	Taper-face	New	0.35 mm to 0.55 mm (.014 in to .02 in)
	Oil scraper ring	New	0.35 mm to 0.50 mm (.014 in to .02 in)
	All	Wear limit	1.50 mm (.059 in)
Ring/piston groove clearance	Rectangular	New	0.025 mm to 0.070 mm (.001 in to .003 in)
	Taper-face	New	0.015 mm to 0.06 mm (.0006 in to .0024 in)
	Oil scraper ring	New	0.020 mm to 0.055 mm (.001 in to .002 in)
	All	Wear limit	0.15 mm (.006 in)
Piston/cylinder wall clearance		New	0.04 mm to 0.08 mm (.0016 in to .0031 in)
		Wear limit	0.100 mm (.0039 in)
Cylinder taper		Wear limit	0.100 mm (.0039 in)
Cylinder out of round (maximum)			0.015 mm (.0006 in)
Camshaft bearing journal diameter	Front	New	24.939 mm to 24.960 mm (.9819 in to .9827 in)
		Wear limit	24.910 mm (.9807 in)
	PTO and center	New	39.892 mm to 39.905 mm (1.5706 in to 1.5711 in)
		Wear limit	39.880 mm (1.5701 in)
Camshaft bearing inner diameter	Front	New	25.000 mm to 25.013 mm (.9843 in to .9848 in)
		Wear limit	25.050 mm (.9862 in)
	PTO and center	New	40.000 mm to 40.020 mm (1.5748 in to 1.5756 in)
		Wear limit	40.050 mm (1.5768 in)
Cam lobe height	Intake	New	31.540 mm to 31.740 mm (1.2417 in to 1.2496 in)
		Wear limit	31.50 mm (1.2402 in)
	Exhaust	New	31.430 mm to 31.630 mm (1.2374 in to 1.2453 in)
		Wear limit	31.380 mm (1.2354 in)
Crankshaft deflection		Maximum	0.05 mm (.002 in)
Crankshaft axial clearance		New	0.080 mm to 0.220 mm (.0031 in to .0087 in)
		Wear limit	0.35 mm (.014 in)
Crankshaft bearing journal diameter		New	49.991 mm to 50.000 mm (1.9681 in to 1.9685 in)
		Wear limit	49.950 mm (1.9665 in)
Crankshaft radial clearance		Wear limit	0.07 mm (.0028 in)
Connecting rod big end diameter		Service limit	45.080 mm (1.7748 in)
Connecting rod big end radial play		Service limit	0.090 mm (.0035 in)
Connecting rod big end axial play		New	0.100 mm to 0.352 mm (.004 in to .014 in)
		Wear limit	0.500 mm (.0197 in)
Connecting rod small end diameter		New	23.010 mm to 23.020 mm (.9059 in to .9063 in)
		Wear limit	23.070 mm (.9083 in)

MODEL			RXP X 260 / RXP X 260 RS
ENGINE (cont'd)			
Connecting rod small end radial play		Wear limit	0.080 mm (.0031 in)
Piston pin diameter		New	22.996 mm to 23.000 mm (.9054 in to .9055 in)
		Wear limit	22.990 mm (.9051 in)
Balance shaft journal diameter		New	31.984 mm to 32.000 mm (1.2592 in to 1.2598 in)
		Wear limit	31.950 mm (1.2579 in)
Balance shaft radial clearance		Wear limit	0.070 mm (.0028 in)
Balance shaft axial clearance		New	0.020 mm to 0.250 mm (.0008 in to .0098 in)
Supercharger shaft driven plate journal depth		New	14.460 mm to 14.500 mm (.5693 in to .5709 in)
		Wear limit	14.600 mm (.5748 in)
Supercharger drive gear thickness		New	11.000 mm to 11.050 mm (.4331 in to .435 in)
		Wear limit	10.900 mm (.4291 in)
Supercharger lock washer thickness		New	4.050 mm to 4.150 mm (.1594 in to .1634 in)
		Wear limit	3.950 mm (.1555 in)
Supercharger spring washer package height (not compressed)		New	10.900 mm to 10.700 mm (.4291 in to .4213 in)
		Wear limit	10.200 mm (.4016 in)
AIR INTAKE SYSTEM			
Intake spark arrester			Tubular, wire screen
COOLING SYSTEM			
Type			Closed loop cooling system
Coolant			Ethylene-glycol and distilled water (50%/50%). Use premix coolant from BRP or a coolant specially formulated for aluminum engines
Cooling system capacity			5.5 L (5.8 qt (U.S. liq.)) total
Thermostat			87°C (189°F)
Monitoring beeper setting			100°C (212°F)
EXHAUST SYSTEM			
Type			D-Sea-Bel sound reduction system. Water cooled/water injected (open loop). Direct flow from jet pump
Water injection in muffler			3 x 3.5 mm (.138 in) on exhaust pipe and 1 x 3.5 mm (.138 in) on muffler
FUEL SYSTEM			
Fuel injection type			Multipoint fuel injection with iTC (intelligent Throttle Control). Single throttle body (62 mm) with an actuator
Fuel pressure			386 kPa to 414 kPa (56 PSI to 60 PSI)
Fuel injector		Quantity	3
Fuel type	Inside North America ((RON + MON)/2)		91 or higher
	Outside North America (RON)		95 or higher
Fuel tank (including reserve)			60 L (16 U.S. gal.)
Fuel tank reserve (from low level signal)			approx. 12 L (3.2 U.S. gal.)
Idle speed			1800 ± 50 RPM (not adjustable)

MODEL			RXP X 260 / RXP X 260 RS
ELECTRICAL SYSTEM			
Magneto generator output			360 W @ 6000 RPM
Stator			0.1 to 1.0 Ω
Battery			12 V, 30 A•h
Anti-start system			D.E.S.S. (Digitally Encoded Security System) with selectable maximum vehicle speed settings for RK (rental key) and LK (learning key)
Ignition system type			IDI (Inductive Discharge Ignition)
Ignition timing			Variable (electronically controlled)
Spark plug		Make and type	NGK DCPR8E
		Gap	0.7 mm to 0.8 mm (.028 in to .031 in)
Ignition coil		Primary	0.85 to 1.15 Ω
		Secondary	9.5 to 13.5 KΩ
Engine speed limiter setting			8300 RPM
Fuse box	#1: iBR control		5 A
	#2: Diagnostic connector		15 A
	#3: START/STOP		3 A
	#4: Gauge constant power		3 A
	#5: iBR power		30 A
	#6: Voltage rectifier/regulator		30 A
	#7: iS power		30 A
	#8: IFuses 2, 3, 4 and relay		30 A
	#11: Depth sounder		3 A
	#12 O.T.A.S., Gauge start up, CAPS		3 A
	#13: Inj/Ign cyl 1		10 A
	#14: Inj/Ign cyl 2		10 A
	#15: Inj/Ign cyl 3		10 A
	#16: Starter solenoid		5 A
	#17: iBR control		5 A
	#18: Fuel pump		10 A
	#19: ECM power		15 A

MODEL			RXP X 260 / RXP X 260 RS
STEERING AND PROPULSION			
Steering			Adjustable 4 positions
Steering nozzle pivoting angle			26°
O.T.A.S. (Off-Throttle Assisted Steering)			Electronically-controlled. Achieved with the iBR gate and engine speed
Jet pump		Type	Axial flow single stage
		Grease type	Jet pump bearing grease (P/N 293 550 032)
Impeller	Rotation (seen from rear)		Counterclockwise
	Pitch	RXP X 260	14°/25°
		RXP X 260 RS	
	Outside diameter		159 mm ± 0.06 mm (6.26 in ± .002 in)
Impeller/wear ring clearance		New	0 mm to 0.23 mm (0 in to .009 in)
		Wear limit	0.35 mm (.0138 in)
Impeller shaft		End play (new)	0
		Side play	0
Drive shaft		Coupling type	Crowned splines, direct drive
		Deflection (max.)	0.5 mm (.02 in)
Minimum required water level for propulsion system			90 cm (3 ft) underneath the lowest rear portion of hull
iBR and VTS			
Description			Intelligent Brake and Reverse activated by a LH lever. Electronically-controlled iBR gate to provide brake, reverse, neutral and forward position
Gate angle (from horizontal line of watercraft)		Forward	Approx. from +8° to -4°
		Neutral	Approx. -52°
		Braking	Approx. -70°
		Reverse	Approx. from -52° to -70°
VTS system			Electronically-controlled through the VTS control button with 2 preset positions
VTS range angle			8° up, -4° down
Actuator			12 V, 80 A max. capacity. Reversible PWM (pulse-width modulation) motor
WEIGHT AND LOADING CAPACITY			
Dry weight			368.3 kg (812 lb)
Number of passenger (driver incl.)			2
Load limit (passenger and 10 kg (22 lb) luggage)			182 kg (400 lb)
DIMENSIONS			
Overall length			331.6 cm (131 in)
Overall width			122.7 cm (48.3 in)
Overall height			114.7 cm (45.2 in)

MODEL	RXP X 260 / RXP X 260 RS
MATERIALS	
Hull	Composite fiberglass
Inlet grate	Aluminum
Steering cover	Thermoplastic
Impeller material	Stainless steel
Impeller housing/stator	Aluminum/aluminum
Venturi	Aluminum
Nozzle	Aluminum
Fuel tank	Polyethylene
Seat	Polyurethane/foam
N.A.: Not Available	

WIRING DIAGRAM INFORMATION

GENERAL

WIRING DIAGRAM LOCATION

The wiring diagrams are in the back cover pocket.

WIRING DIAGRAM CODES

Wire Color Codes

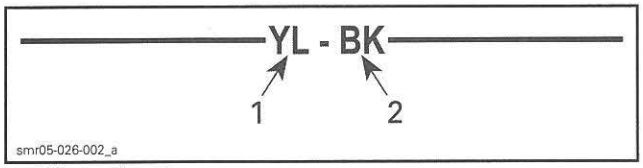

1. *Wire main color*
2. *Tracer (thin colored line)*

General Wire Color Use

COLOR	USE
RED	Battery power (12 Vdc directly connected to battery)
RED + tracer	Fused 12 Vdc power or switched power from relay
VIOLET or VIOLET + tracer	Fused 12 Vdc accessory power from fuse box
YELLOW	Alternating current (AC) from magneto
BLACK	Ground
WHITE/BEIGE WHITE/BLACK	CAN HI wires, CAN LO wires

Color Codes

COLOR CODES			
CODE	COLOR	CODE	COLOR
BE	BEIGE (TAN)	OR	ORANGE
BR	BROWN	PK	PINK
BU	BLUE	RD	RED
BK	BLACK	VI	VIOLET
GN	GREEN	WH	WHITE
GY	GRAY	YL	YELLOW

Terminal Identification on Connector

On the wiring diagram, a letter or a digit is used to identify the terminal position in a connector.

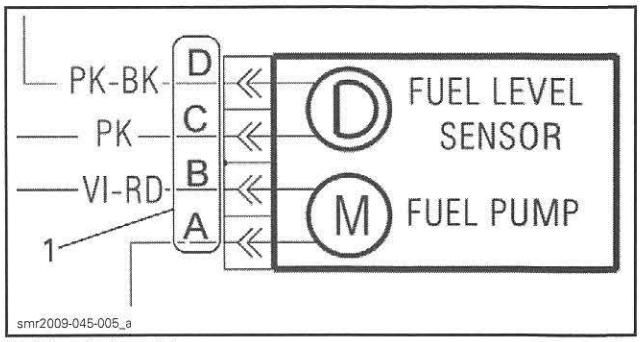

1. *Terminal position*

On a connector, a letter or a digit is usually molded on the connector to identify the terminal position.

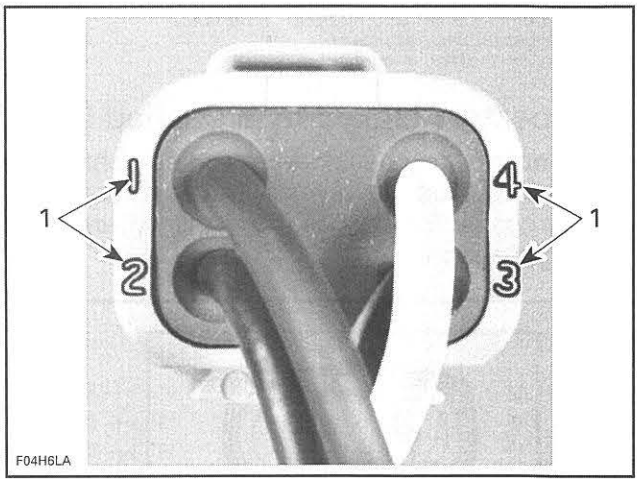

TYPICAL
1. *Wire identification numbers*

Terminal Identification on a Wiring Diagram

In-line connectors of wiring harnesses are identified on the wiring diagram with their approximate location and the following information.

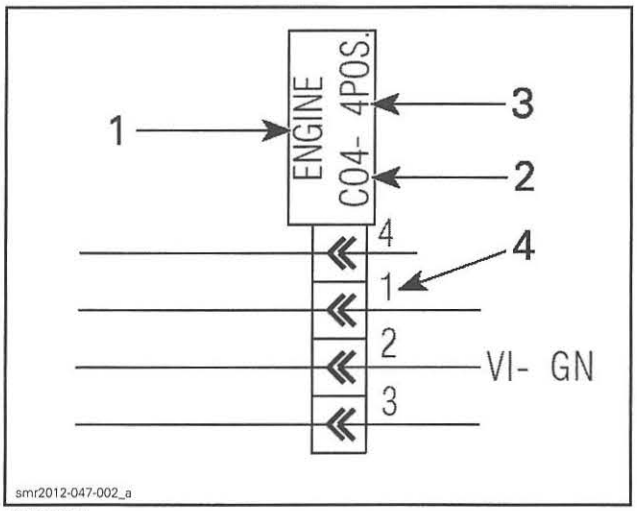

TYPICAL
1. *Connector location*
2. *Connector identification (reference number)*
3. *Number of pins (terminals)*
4. *Wire pin location in connector*

Connectors Linked by a Dashed Line

Connectors may be divided into segments linked by dashed lines, however, some segments of the same connector may be found elsewhere on the wiring diagram.

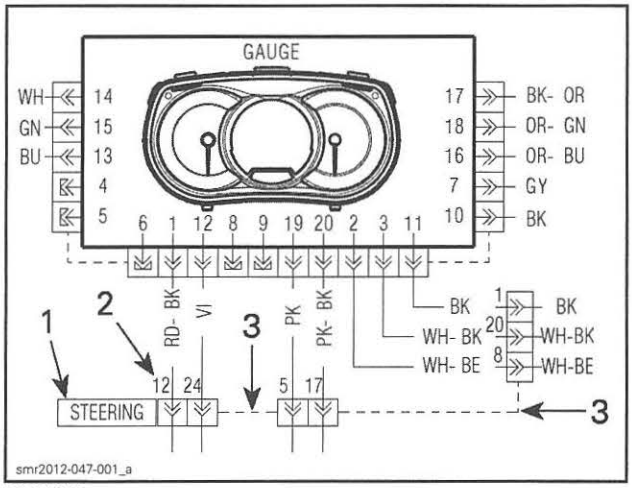

TYPICAL
1. *Connector identification and location*
2. *Connector pin number*
3. *Dashed line links connector segments as one*

CAN Wire Circuit References

On the wiring diagram, CAN linked components use the following coding.

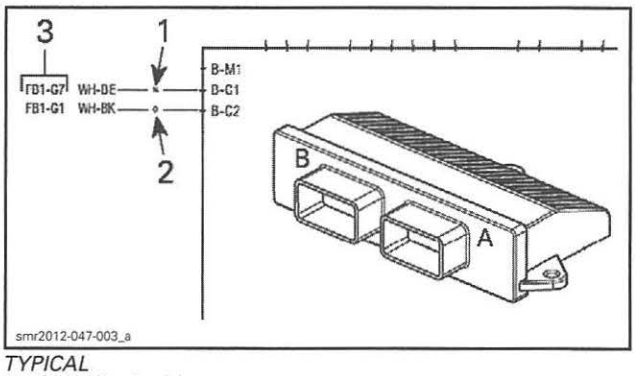

TYPICAL
1. *CAN HI wire (x)*
2. *CAN LOW wire (o)*
3. *Wire destination*

FB1: Fuse box no. 1
G7: Terminal G7 in fuse box no. 1

Corresponding CAN links are identified at fuse box using the following coding.

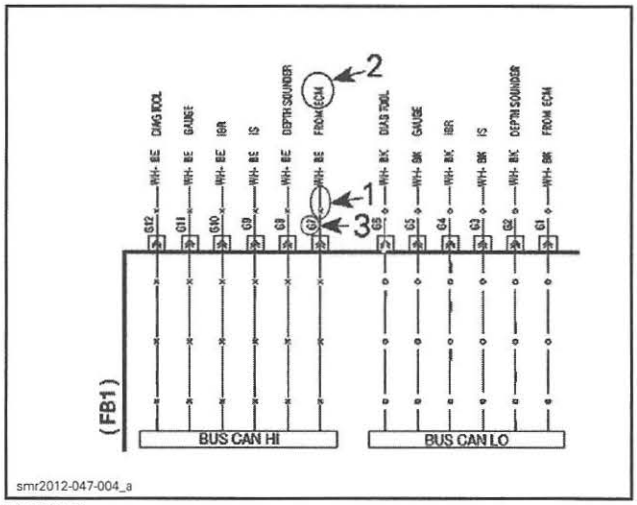

TYPICAL
1. *CAN wire*
2. *Wire origin*
3. *Destination terminal (as referenced at ECM)*

Component Application

If a component in the wiring diagram is not applicable to every vehicle model, or can be installed as an option or accessory on certain models, the component shall be enclosed in a dash line.

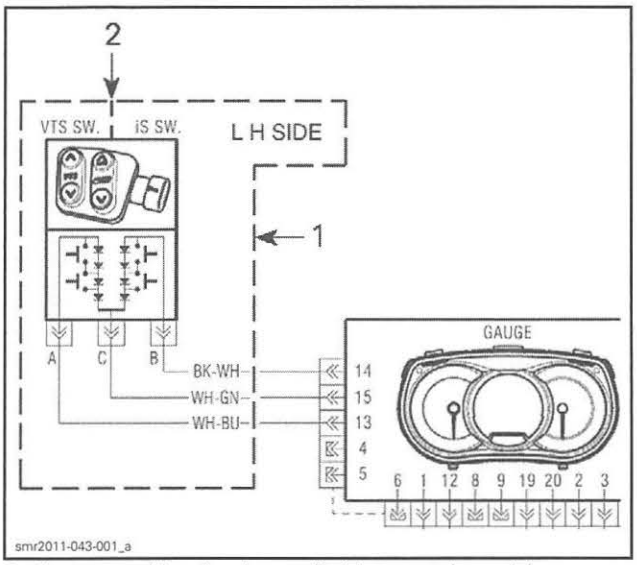

1. Component(s) optional or applicable to certain models
2. Indicates each switch is a separate component

CONNECTOR INFORMATION

SERVICE TOOLS

Description	Part Number	Page
CRIMPING TOOL (HEAVY GAUGE WIRE)	529 035 730	777
DIAGNOSTIC HARNESS	529 036 188	772
ECM ADAPTER TOOL	529 036 166	767
ECM TERMINAL REMOVER 2.25	529 036 175	767
ECM TERMINAL REMOVER 3.36	529 036 174	767

SERVICE TOOLS – OTHER SUPPLIER

Description	Part Number	Page
AMP TERMINAL EXTRACTOR	726503-1	769
DELPHI TERMINAL EXTRACTOR	12094429	768, 771–774
FCI TERMINAL EXTRACTOR TOOL	54241678	772, 774
GM TERMINAL EXTRACTOR	12094430	769, 776

PROCEDURES

MAGNETO AND ENGINE CONNECTOR (DEUTSCH)

Connector Removal from its Support

1. Insert a small flat screwdriver between the support and the Deutsch connector.
2. Pry the connector away from the support slightly while sliding it out in the direction shown.

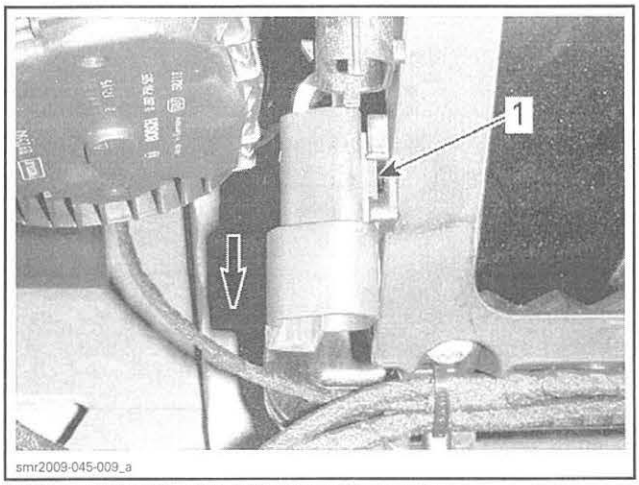

MALE CONNECTOR REMOVED FOR CLARITY
1. Insert screwdriver here

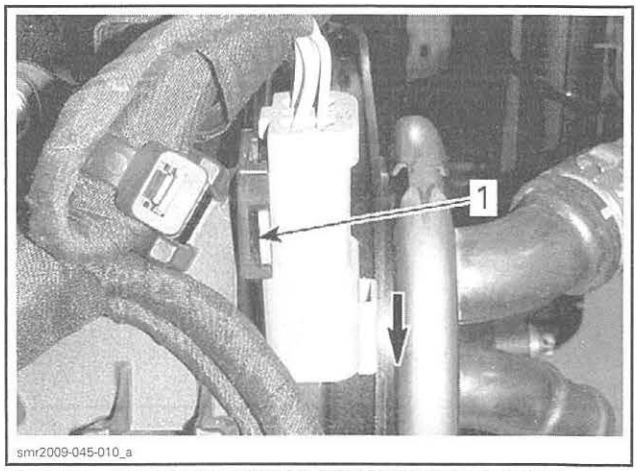

TYPICAL - MALE CONNECTOR REMOVED FOR CLARITY
1. Insert screwdriver here

Connector Disconnect

1. To disconnect a Deutsch connector, press the release tab and twist a small flat screwdriver between the male and female housing to disengage and disconnect them.

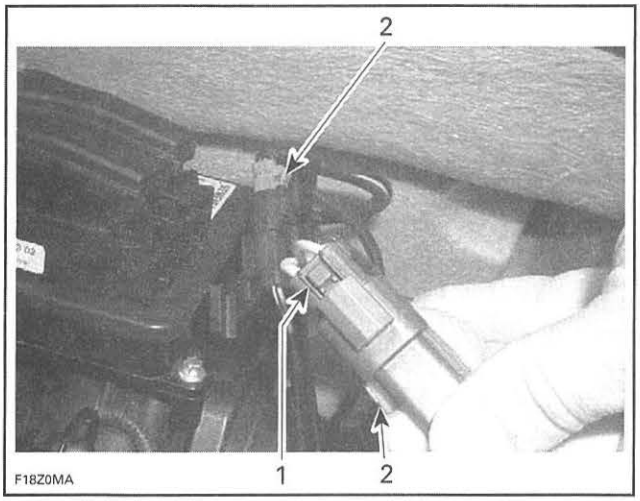

TYPICAL
1. *Release tab*
2. *Deutsch connector*

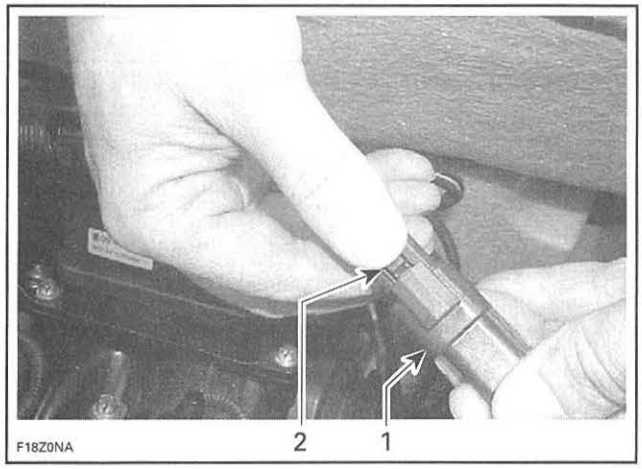

TYPICAL
1. *Deutsch connector*
2. *Press release button*

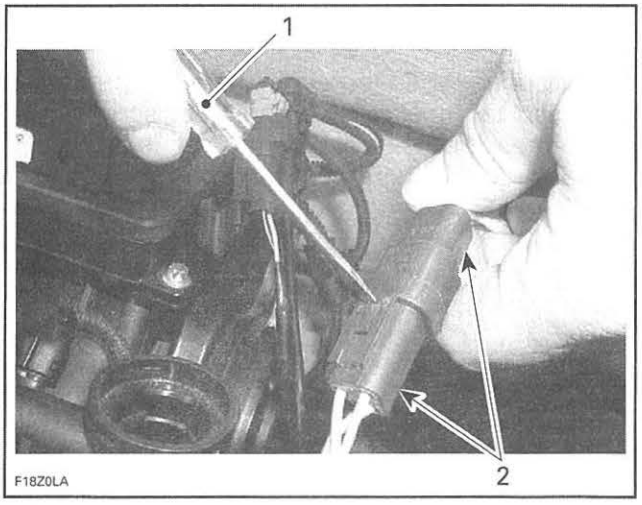

TYPICAL
1. *Flat screwdriver*
2. *Deutsch connector*

Connector Disassembly and Reassembly

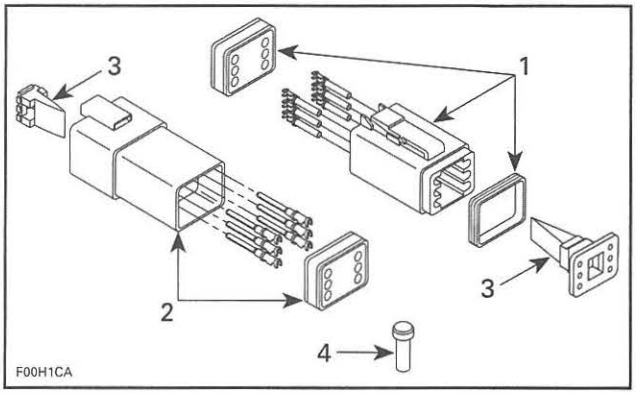

TYPICAL - DEUTSCH CONNECTOR
1. *Male connector*
2. *Female connector*
3. *Secondary lock*
4. *Sealing cap*

NOTICE Do not apply dielectric grease on terminal inside connector.

To remove terminals from connector, proceed as follows:

1. Using long nose pliers, pull out the plastic lock from between the terminals.

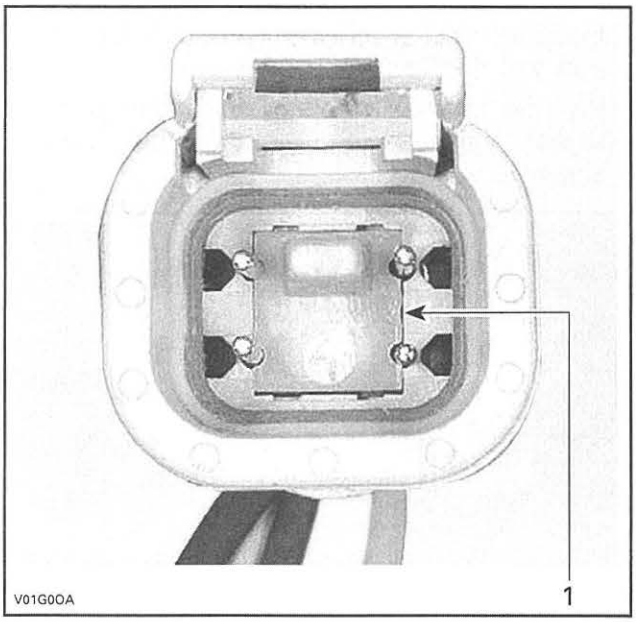

FEMALE CONNECTOR
1. *Female lock*

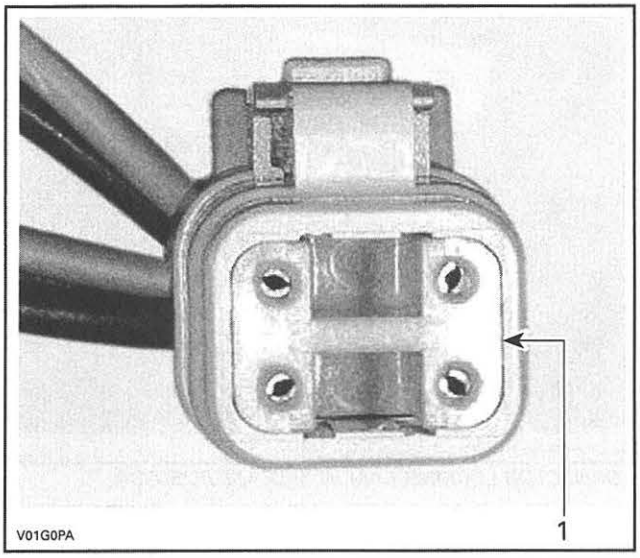

MALE CONNECTOR
1. Male lock

NOTE: Before pin extraction, push wire forward to relieve pressure on retaining tab.

2. Insert a 4.8 mm (.189 in) wide screwdriver blade inside the front of the terminal cavity.
3. Pry the retaining tab away from the terminal while gently pulling the wire and terminal out of the back of the connector.

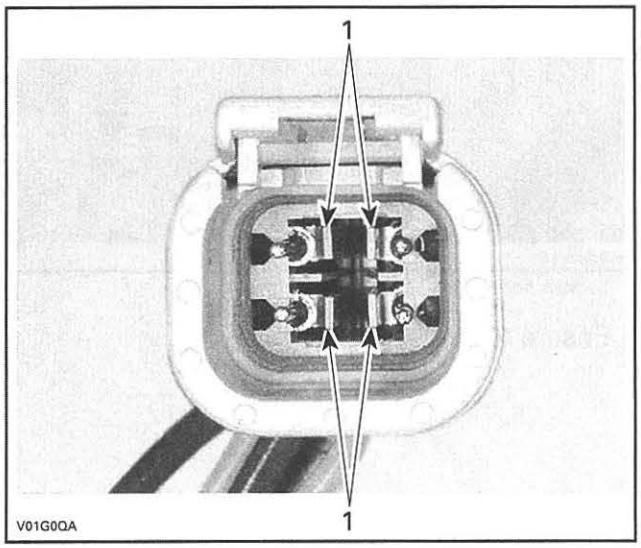

FEMALE CONNECTOR
1. Retaining tabs

To install:

1. For insertion of a terminal, ensure the plastic lock is removed.
2. Insert terminal through the back of the connector in the appropriate position, and push it in as far as it will go. You should feel or hear the terminal lock engage.
3. Pull back on the terminal wire to ensure the retention fingers are holding the terminal.
4. After all required terminals have been inserted, the lock must be installed.

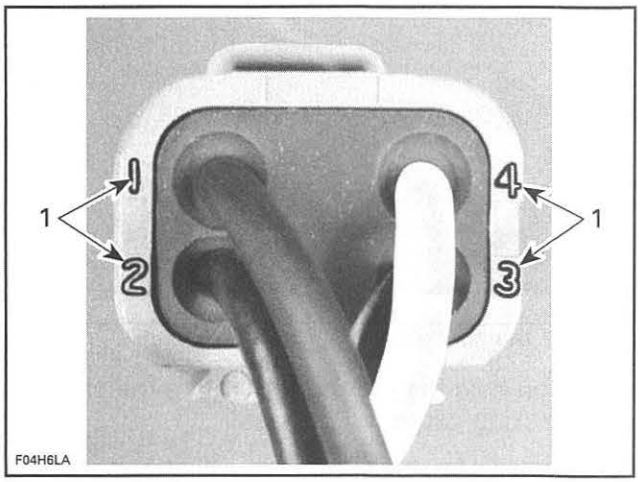

CONNECTOR PIN-OUT
1. Terminal position identification numbers

ECM CONNECTOR (MOLEX)

There are 2 connectors on the ECM.

The engine wiring harness connector is connected to ECM connector "A". The vehicle wiring harness connector is connected to ECM connector "B".

Each ECM connector has 48 pins.

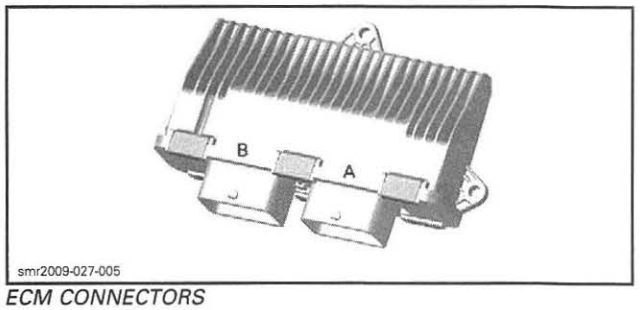

ECM CONNECTORS

Connector Removal

1. To access the ECM, refer to *ELECTRONIC FUEL INJECTION (EFI)* subsection.
2. Press **and hold** the locking tab on the connector to be disconnected.

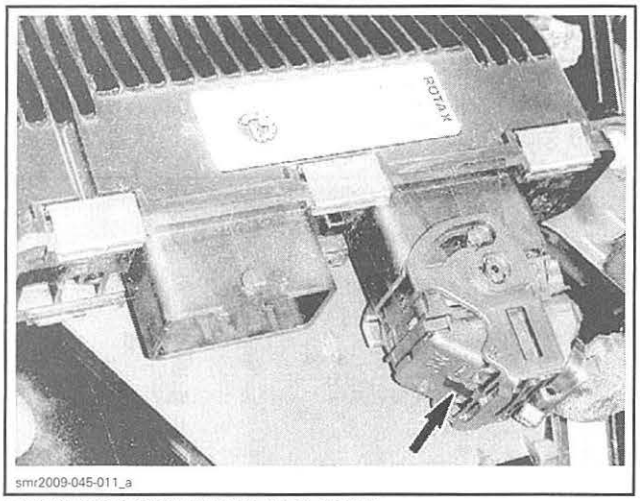

LOCKING TAB TO PRESS AND HOLD

3. As you hold the locking tab, rotate the connector locking cam until it stops.

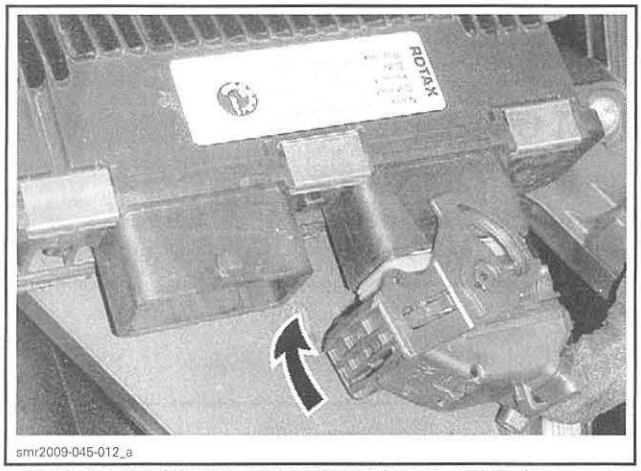

CONNECTOR LOCKING CAM ROTATION TO RELEASE

4. Pull connector off ECM.

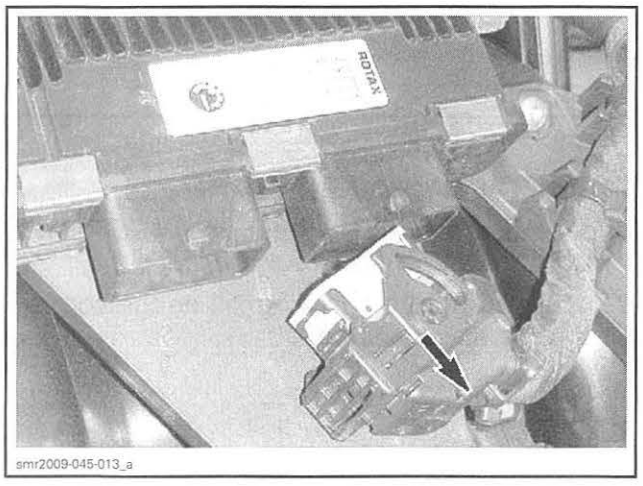

Connector Installation

1. Fully open connector locking cam.



CONNECTOR LOCKING CAM IN RELEASE POSITION

2. Insert connector on ECM.
3. As you push the connector onto the ECM, rotate the connector locking cam until it snaps locked.

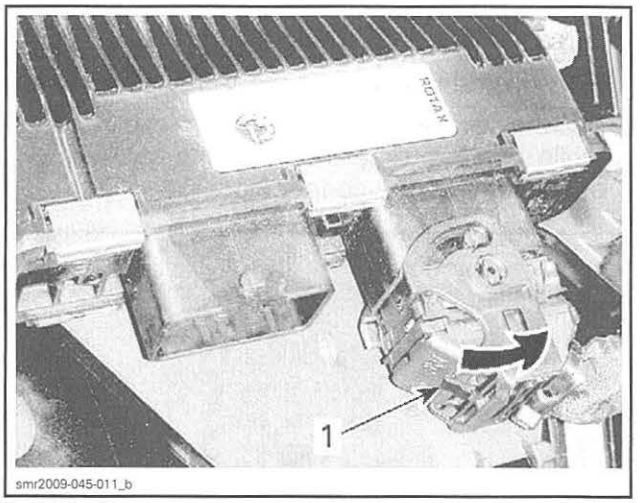

1. Locked here

4. Ensure the locking tab is fully out.

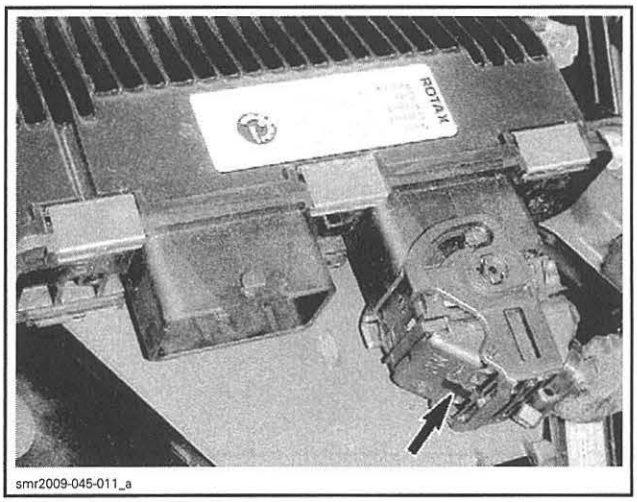

LOCKING TAB FULLY OUT

Connector Inspection

Before replacing an ECM, always check electrical connections.

1. Ensure connector locking mechanism is functioning properly.
2. Ensure all wire terminals (pins) are properly locked in the connector.
3. Ensure they are very tight, make good contact with the pins in the ECM.
4. Ensure the pins in the harness connector and the ECM connector are clean, shiny and corrosion-free.
5. Check wiring harness for signs of scoring.

NOTE: A "defective ECM module" could possibly be repaired simply by disconnecting and reconnecting it.

NOTICE **Do not apply any lubricant product to the pins of the ECM connector.**

Connector Probing

The most recommended and safest method to probe the MOLEX (ECM) connector terminals is to use the ECM ADAPTER TOOL (P/N 529 036 166). This tool will prevent deforming or enlarging of the terminals, which would lead to bad ECM terminal contact creating intermittent or permanent problems.

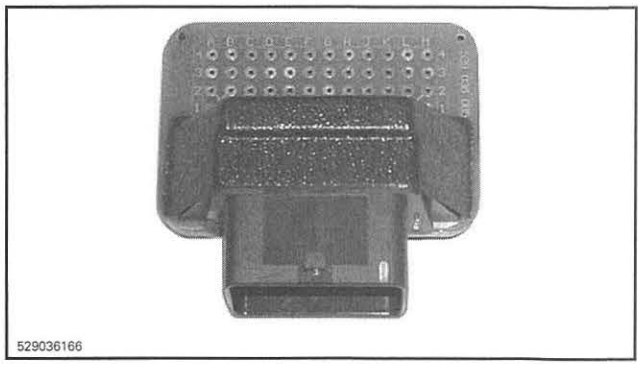

1. Disconnect the ECM connector to be probed, and reconnect it on the ECM adapter.
2. Probe wire terminals of the circuit to be tested directly in the adapter holes.

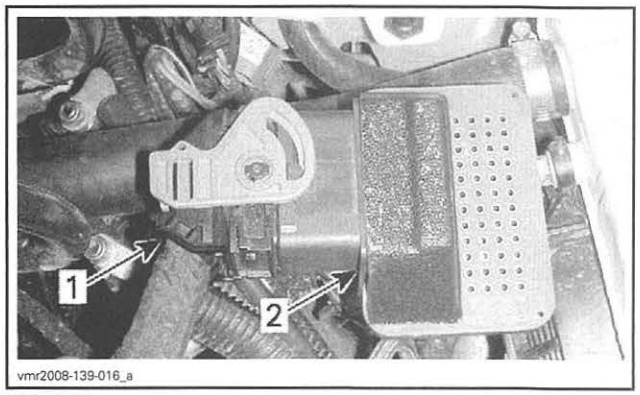

TYPICAL
1. ECM connector
2. ECM adapter

NOTICE **Never probe directly on the ECM harness connector. This could change the shape or enlarge the terminals and create intermittent or permanent contact problems.**

Connector Terminal Removal (Harness Connector)

To remove a signal terminal from the ECM harness connector, use the ECM TERMINAL REMOVER 2.25 (P/N 529 036 175).

To remove a power terminal, use the ECM TERMINAL REMOVER 3.36 (P/N 529 036 174).

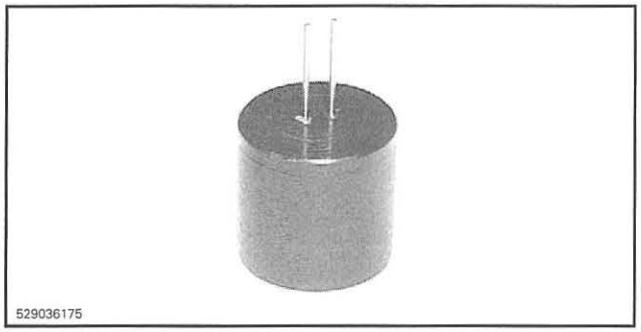

1. Remove rear protector from connector.
2. Pull out the connector lock.

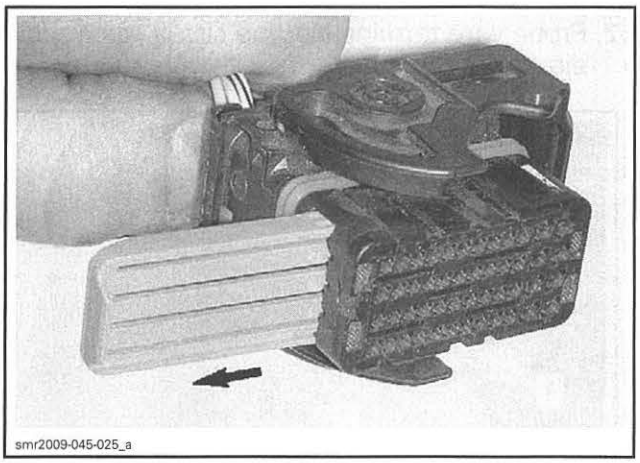

3. Insert tool to unlock terminal.

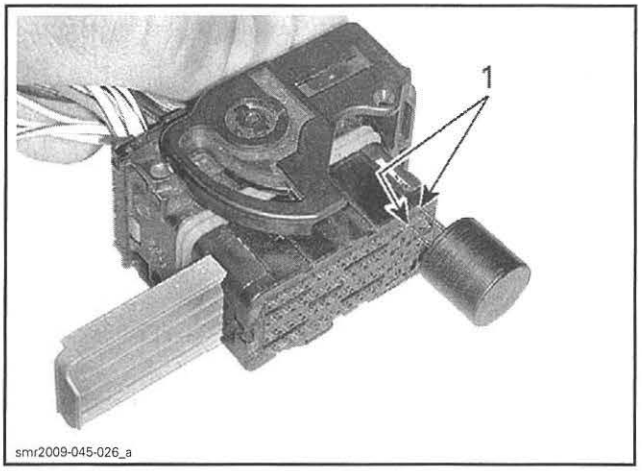

1. Unlock here

4. Gently pull on the wire to extract the terminal out the back of the connector.

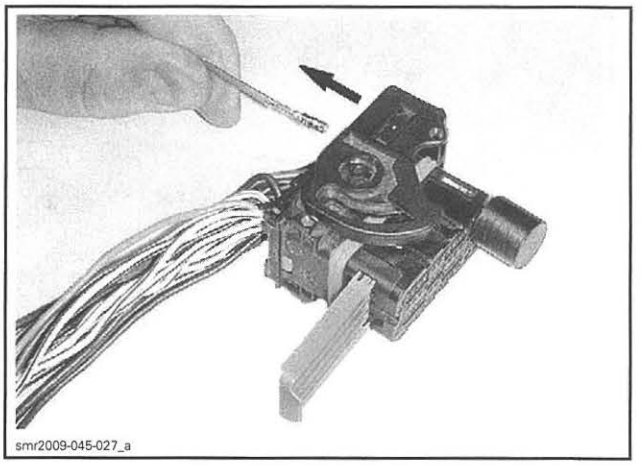

NOTICE Before installing wire terminals in the connector, ensure all terminals are properly crimped on wires. After installation of wire terminals in the connectors, ensure they are properly locked by gently pulling on them as if to extract them.

BRLS, TAS AND STARTER SOLENOID CONNECTORS (DELPHI)

Connector Terminal Removal

To remove a terminal (pin) from the connector, use a special tool such as the DELPHI TERMINAL EXTRACTOR (P/N 12094429).

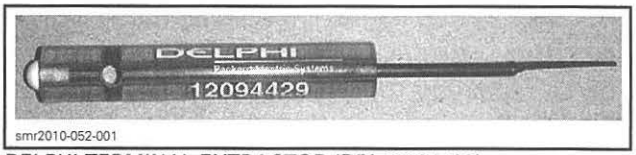

DELPHI TERMINAL EXTRACTOR (P/N 12094429)

NOTE: Grinding the tool end to a taper is required.

1. Carefully insert the tool in the space provided to release the pin lock.
2. Push the pin out the front of the connector by pushing on the wire.

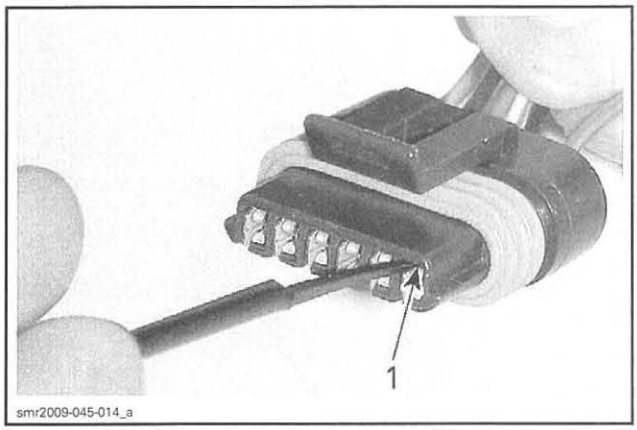

1. Unlock terminal here

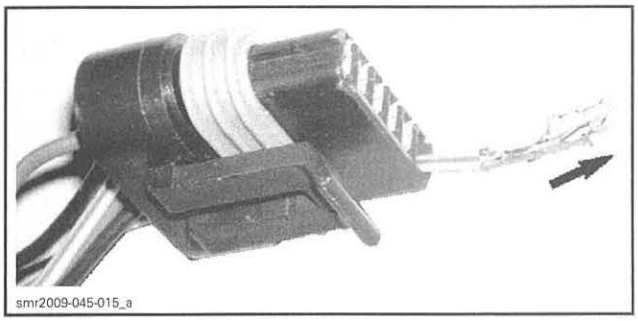

NOTICE Before installing terminals in the connectors, ensure all terminals are properly crimped on the wires. After installation of the wire terminals in the connectors, ensure they are properly locked by gently pushing on them as if to extract them.

iBR AND iS POWER CONNECTORS (DELPHI)

Connector Terminal Removal

To remove a terminal (pin) from the connector, use a special tool such as the GM TERMINAL EXTRACTOR (P/N 12094430).

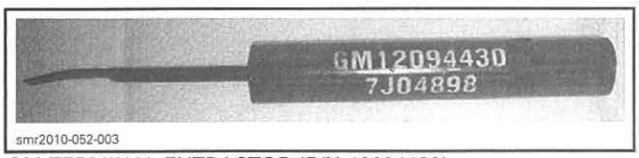

GM TERMINAL EXTRACTOR (P/N 12094430)

1. Carefully insert the tool in the space provided to release the pin lock.

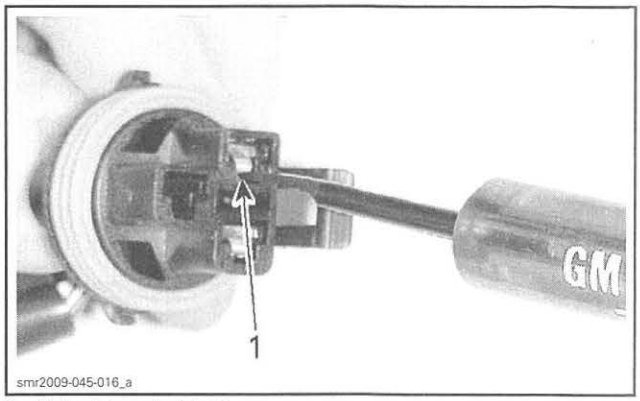

1. Unlock terminal here

2. Gently pull on the wire to extract the pin out the back of the connector.

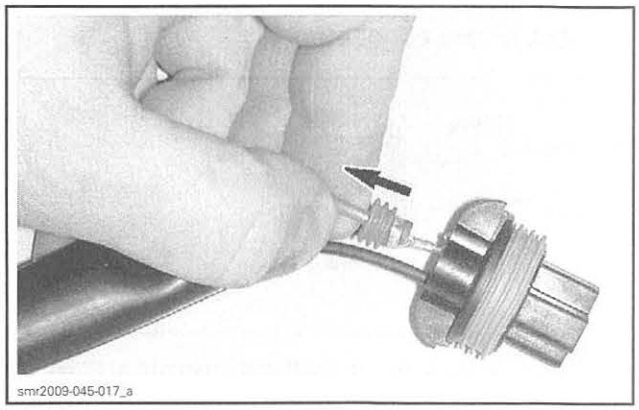

NOTICE Before installing terminals in the connectors, ensure all terminals are properly crimped on the wires. After installation of the wire terminals in the connectors, ensure they are properly locked by gently pushing on them as if to extract them.

SPS CONNECTORS (BOSCH)

Connector Terminal Removal

To remove a terminal (pin) from the connector, use a special tool such as the AMP TERMINAL EXTRACTOR (P/N 726503-1).

1. Carefully insert the tool in the space provided to release the pin lock.

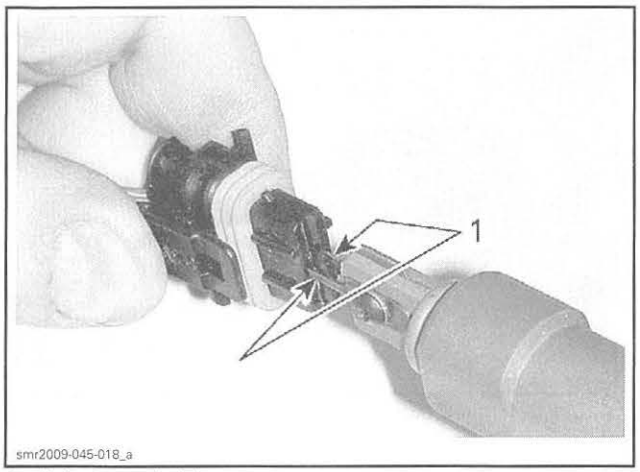

1. Unlock terminal here

2. Gently pull on the wire to extract the pin out the back of the connector.

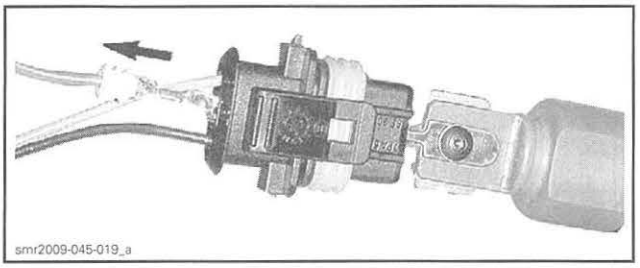

NOTICE Before installing terminals in the connectors, ensure all terminals are properly crimped on the wires. After installation of the wire terminals in the connectors, ensure they are properly locked by gently pulling on them as if to extract them.

INFORMATION CENTER CONNECTOR (DELPHI)

Connector Terminal Removal

1. To remove a terminal from the connector, first remove the locking cap in the front of the connector.

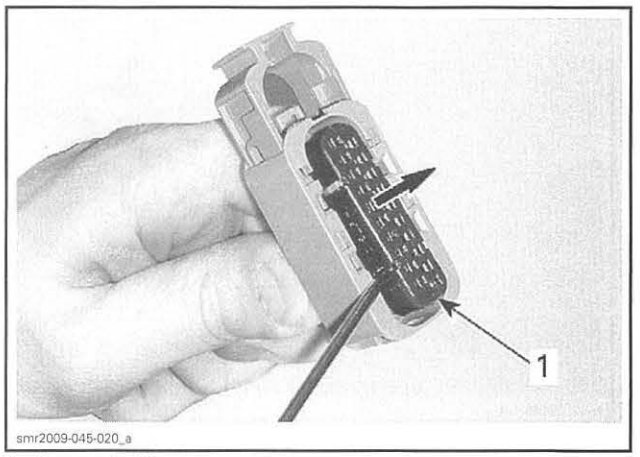

1. Pry out locking cap

2. Release the pin in the front of the connector.

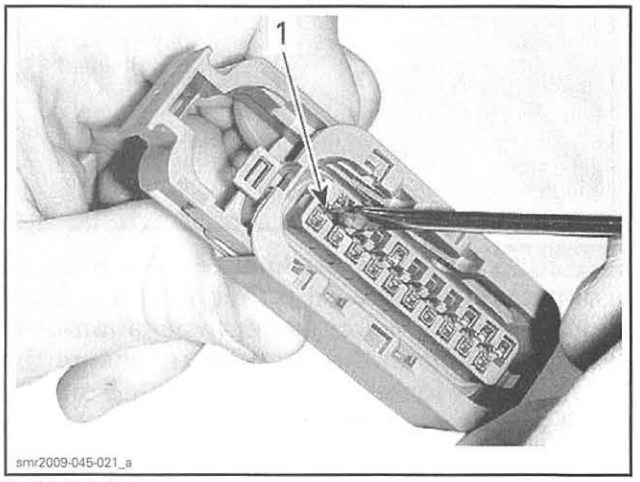

1. Unlock here

3. Gently pull on the wire to extract the pin out the back of the connector.

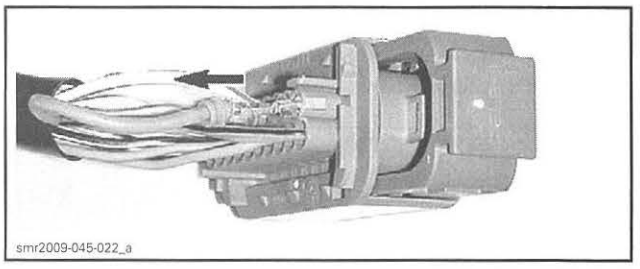

NOTICE Before installing terminals in the connectors, ensure all terminals are properly crimped on the wires. After installation of the wire terminals in the connectors, ensure they are properly locked by gently pushing on them as if to extract them.

VTS, SPORT/ECO, MODE/SET AND UP/DOWN SWITCH CONNECTORS (DELPHI)

Terminal Removal

1. To remove a terminal from connector, first remove the locking cap.

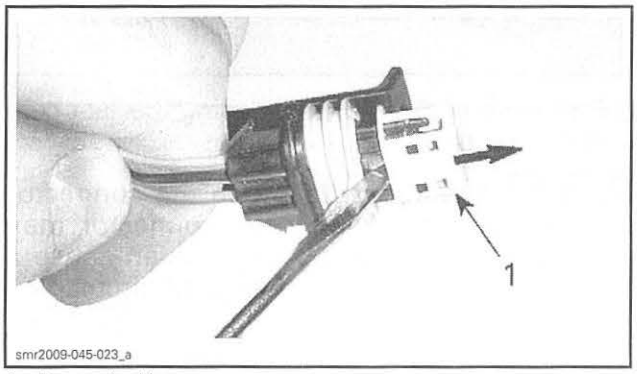

1. Pry out locking cap

2. Carefully insert the DELPHI TERMINAL EXTRACTOR (P/N 12094429) in the space provided to release the pin lock.



DELPHI TERMINAL EXTRACTOR (P/N 12094429)

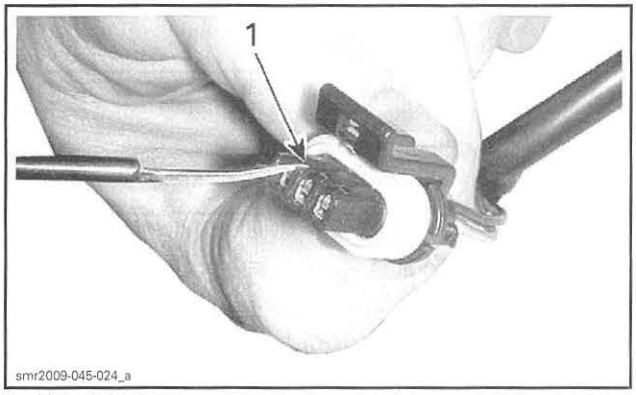

1. Unlock here

3. Gently pull on the wire to extract the pin out the back of the connector.

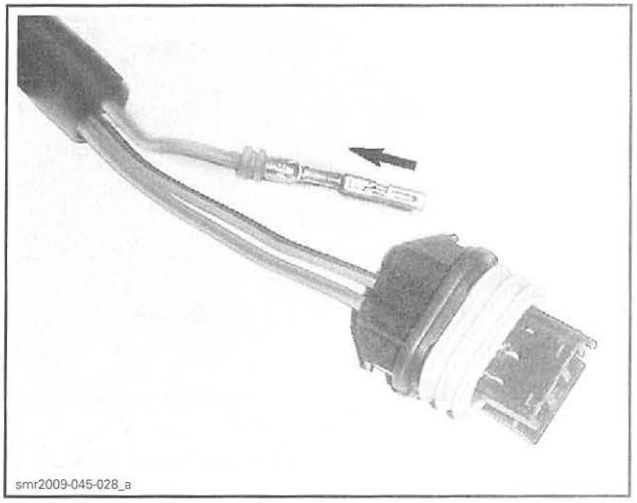

NOTICE Before installing terminals in the connectors, ensure all terminals are properly crimped on the wires. After installation of the wire terminals in the connectors, ensure they are properly locked by gently pushing on them as if to extract them.

24 PIN STEERING CONNECTOR (APEX ERGOMATE)

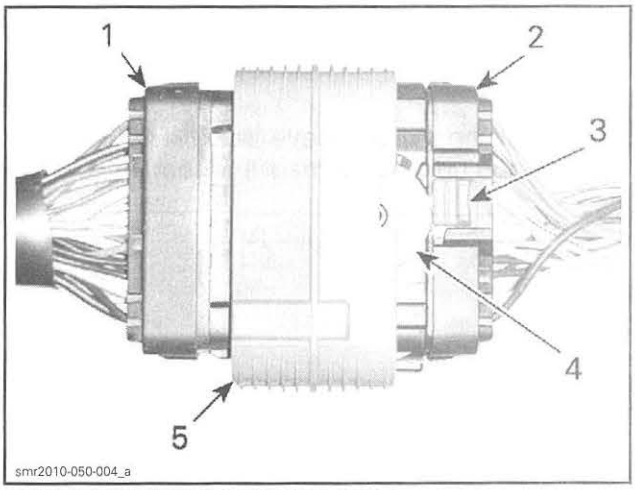

APEX ERGOMATE 24-PIN CONNECTOR
1. Male connector
2. Female connector
3. Safety lock
4. Locking cam
5. Connector sleeve

Connector Disconnect

1. Pull the red safety lock out of the locking cam.

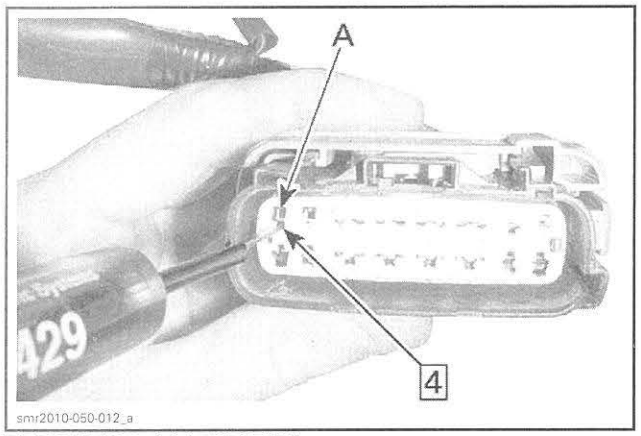

EXTRACTING A LARGER PIN
Step 4: Insert the DELPHI terminal extractor (P/N 12094429) in square hole
A. Pin hole

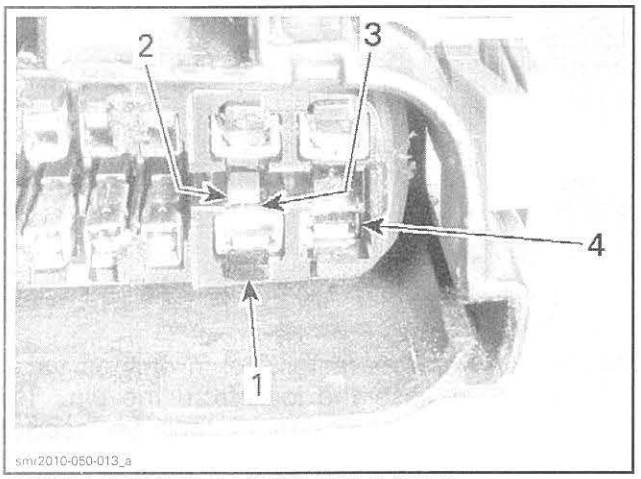

SECONDARY LOCK REMOVED FOR CLARITY
1. *Pin stop*
2. *Pin lock*
3. *Extractor tool inserts here*
4. *This pin is not locked and pushed back*

5. Gently pull on the wire to extract the pin out the back of the connector.

Extracting Pins (Male Connector)

To release one of the 16 small pins towards the middle part of the connector, use the FCI TERMINAL EXTRACTOR TOOL (P/N 54241678).

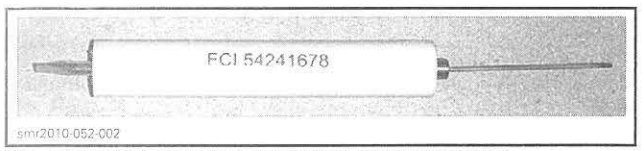

FCI TERMINAL EXTRACTOR TOOL (P/N 54241678)

To release one of the 8 larger pins towards the outer part of the connector, use the DELPHI TERMINAL EXTRACTOR (P/N 12094429).



DELPHI TERMINAL EXTRACTOR TOOL (P/N 12094429)

NOTE: Grinding the DELPHI TERMINAL EXTRACTOR (P/N 12094429) end to a taper is required.

1. Using a pair of thin long nose pliers, pull the secondary lock up to the detent position (the white plastic insert in the connector). This will allow unlocking of the pins.

NOTICE **Do not attempt to remove the secondary lock or damage will occur. Be careful not to bend the pins when using the pliers.**

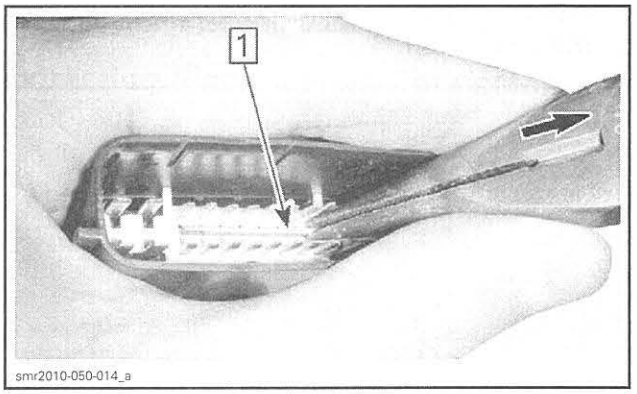

MALE CONNECTOR
Step 1: Pull on secondary lock here

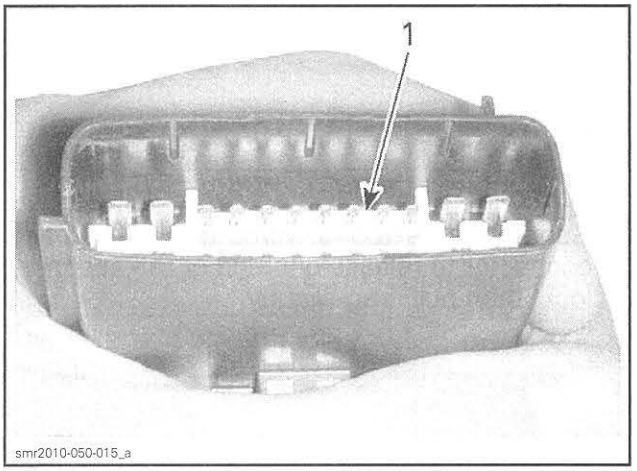

MALE CONNECTOR
1. *Secondary lock in detente position*

2. Insert the extractor tool in the small hole adjacent to the pin.

NOTE: Push the extractor tool in only as far as required to release the lock from the pin. The tool should slide along the pin and be inserted between the pin and the lock.

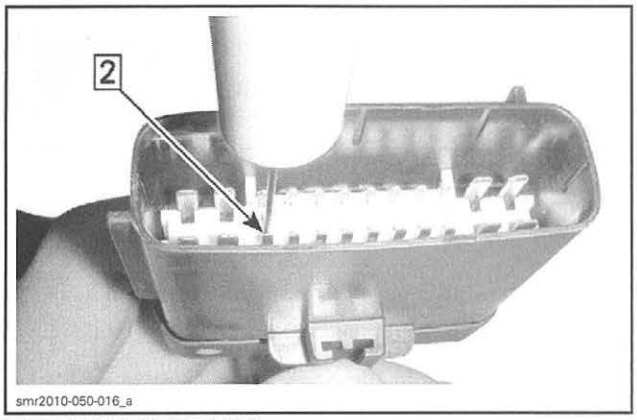

SMALL PIN EXTRACTION
Step 2: Insert FCI Terminal extractor tool (P/N 54241678) in small round hole

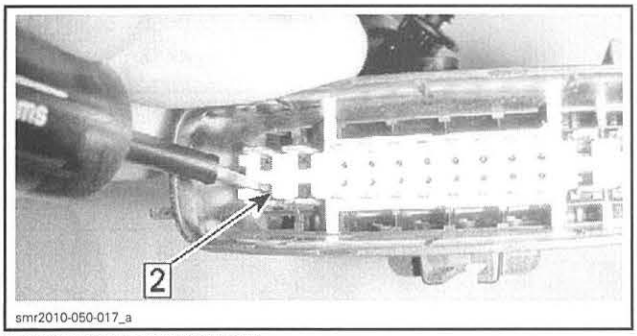

LARGE PIN EXTRACTION
Step 2: Insert DELPHI terminal extractor (P/N 12094429) in square hole

3. Gently pull on the wire to extract the pin out the back of the connector.

Inserting Pins

1. Ensure the terminal (pin) is properly crimped onto the wire.
2. Ensure the secondary lock (the white plastic insert in the connector) is up in the detent position.
3. Insert the pin in through the back of the connector.

NOTE: When inserting a small pin, insert the stepped portion facing the notch in the connector pin hole. The large pin does not have a specific orientation.

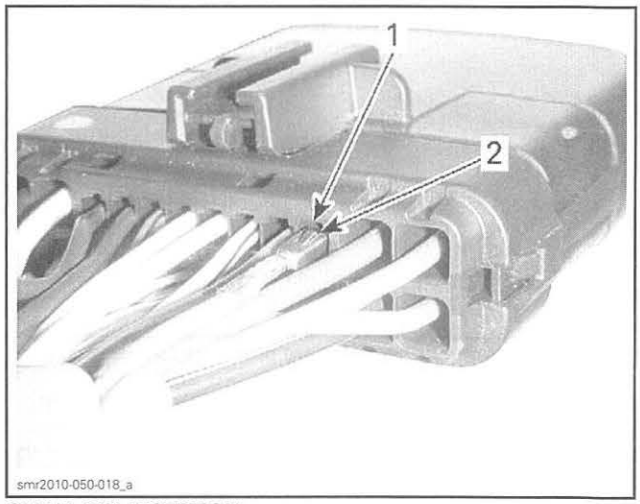

SMALL PIN INSERTION
1. Notch
2. Stepped portion towards notch

4. Push the pin in until the pin lock engages the pin.
5. Gently pull on the pin to ensure it is properly locked.
6. Repeat previous steps for each pin to be inserted.
7. Push the secondary lock into the connector to the locked position.

Reconnecting the APEX ERGOMATE Connector

1. Insert the male connector into the female connector so the lock pin inserts into the lock cam.

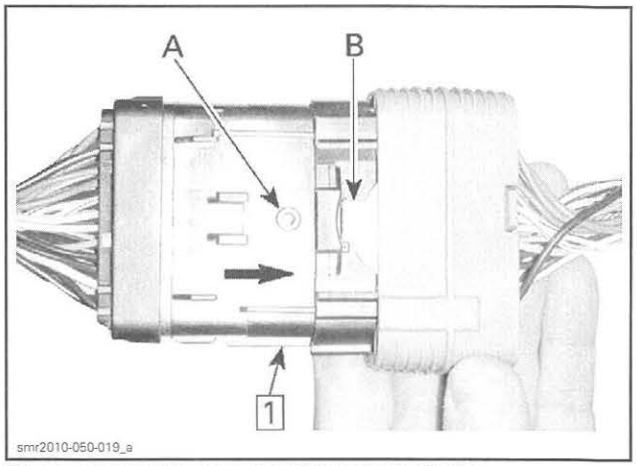

Step 1: Insert male connector in female connector
A. Lock pin
B. Lock cam

2. Push the female connector sleeve over the male connector to rotate and fully engage the locking cam.

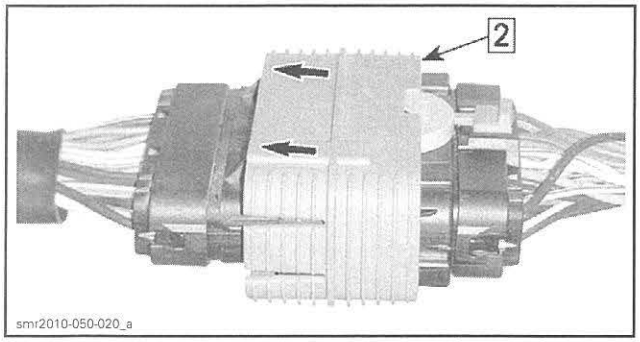

Step 2: Push female connector sleeve over male connector

3. Push the red safety lock into the locking cam.

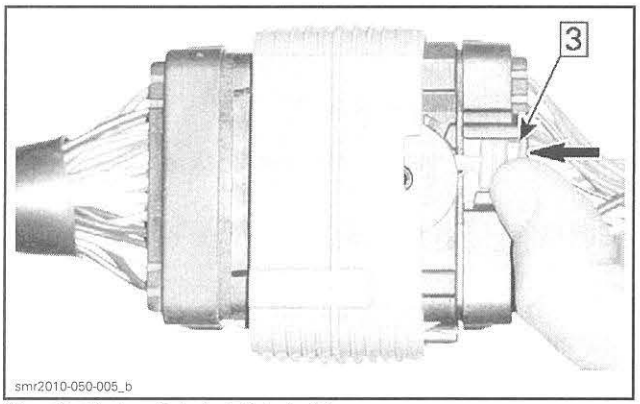

Step 3: Push safety lock into locking cam

VOLTAGE REGULATOR/RECTIFIER CONNECTOR (FURUKAWA)

Terminal Removal

1. Remove the secondary lock (plastic insert).

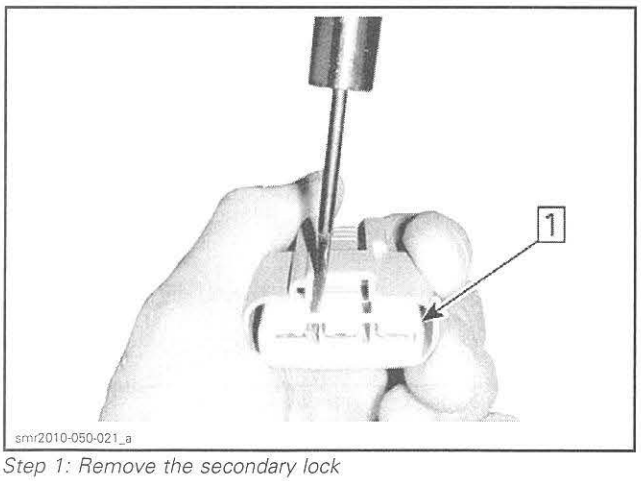

Step 1: Remove the secondary lock

2. Carefully insert the GM TERMINAL EXTRACTOR (P/N 12094430) between the lock and the pin to release the pin.

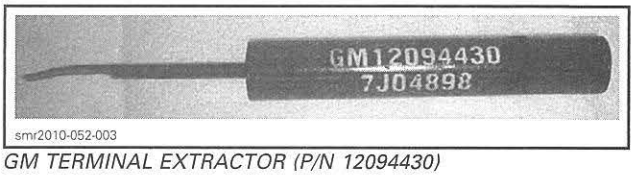

GM TERMINAL EXTRACTOR (P/N 12094430)

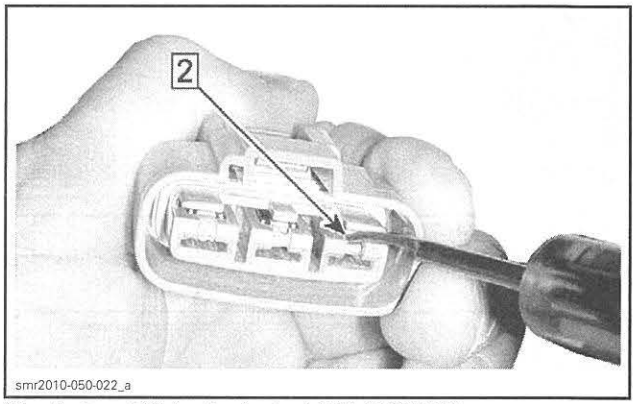

Step 2: Insert GM extractor tool (P/N 12094430)

3. Gently pull on the wire to extract the pin out the back of the connector.

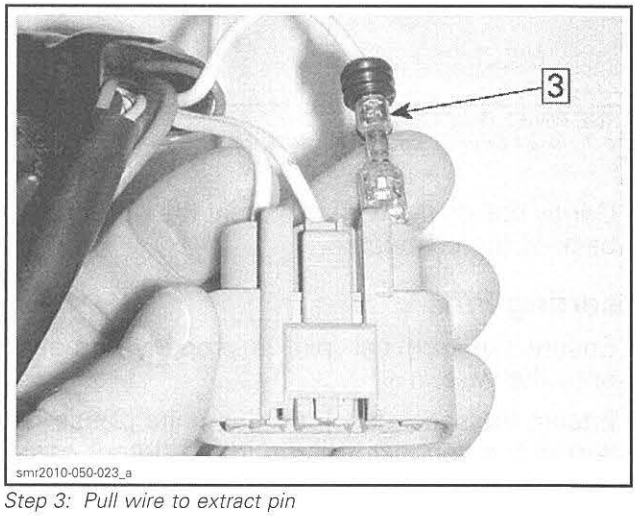

Step 3: Pull wire to extract pin

NOTICE Before installing terminals in the connectors, ensure all terminals are properly crimped on the wires. After installation of the wire terminals in the connectors, ensure they are properly locked by gently pushing on them as if to extract them.

BATTERY CABLES

Battery Cable Crimping

Carefully strip the wire approximately to 10 mm (3/8 in) in length, using a wire stripping tool or sharp blade/knife.

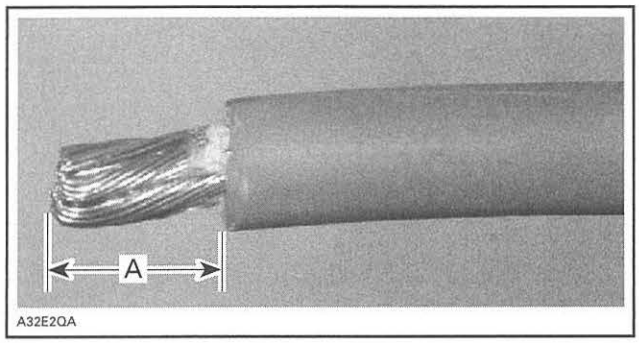

A. 10 mm (3/8 in)

NOTE: Make sure not to cut wire strands while stripping the wire.

Install the appropriate terminal on the wire according to the requirement. Refer to appropriate *PARTS CATALOG*.

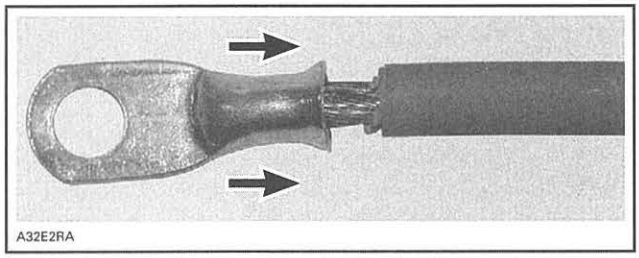

INSTALLATION OF TERMINAL

Follow the instructions provided with the CRIMPING TOOL (HEAVY GAUGE WIRE) (P/N 529 035 730) to select the proper position of the tool.

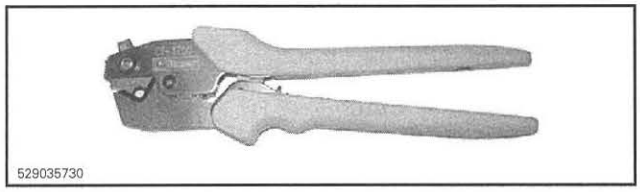

NOTE: Different wires require different crimping pliers settings, so make sure to follow the instruction supplied with the tool.

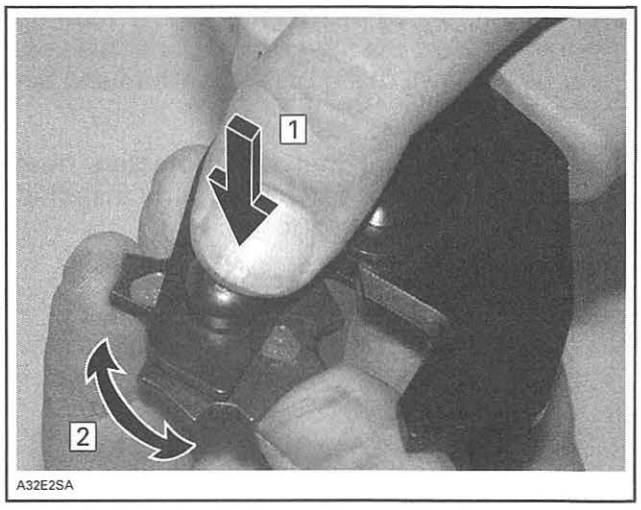

POSITIONING THE CRIMPING PLIERS
Step 1: Press
Step 2: Rotate

After positioning the crimping pliers, crimp the terminal already installed on wire.

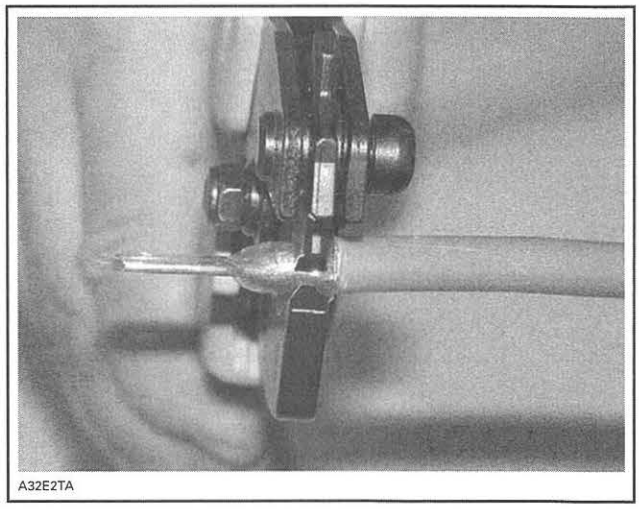

CRIMPING OF WIRE

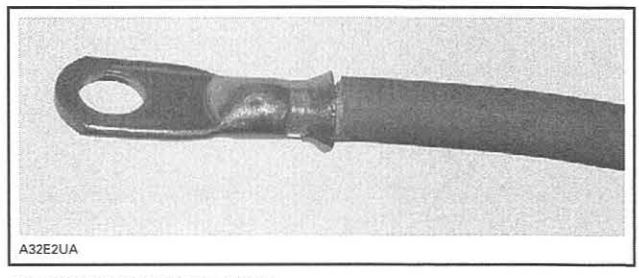

PROPERLY CRIMPED WIRE

To verify, if the wire is properly crimped, apply some pulling force on wire and the terminal at the same time from both directions.

NOTICE Never weld the wire to the terminal. Welding can change the property of the wire and it can become brittle and break.

Install the protective heat shrink rubber tube on the terminal. Heat the heat shrink rubber tube using the heat gun so that it grasps the wire and the terminal.

NOTICE Make sure that the protective heat shrink rubber tube has been properly installed and no part of wire is exposed.

2012 SEA-DOO
4-TEC-iTC SERIES

Covers ALL 2012 Sea-Doo models
Items with a dashed box around
them are not included on all models.

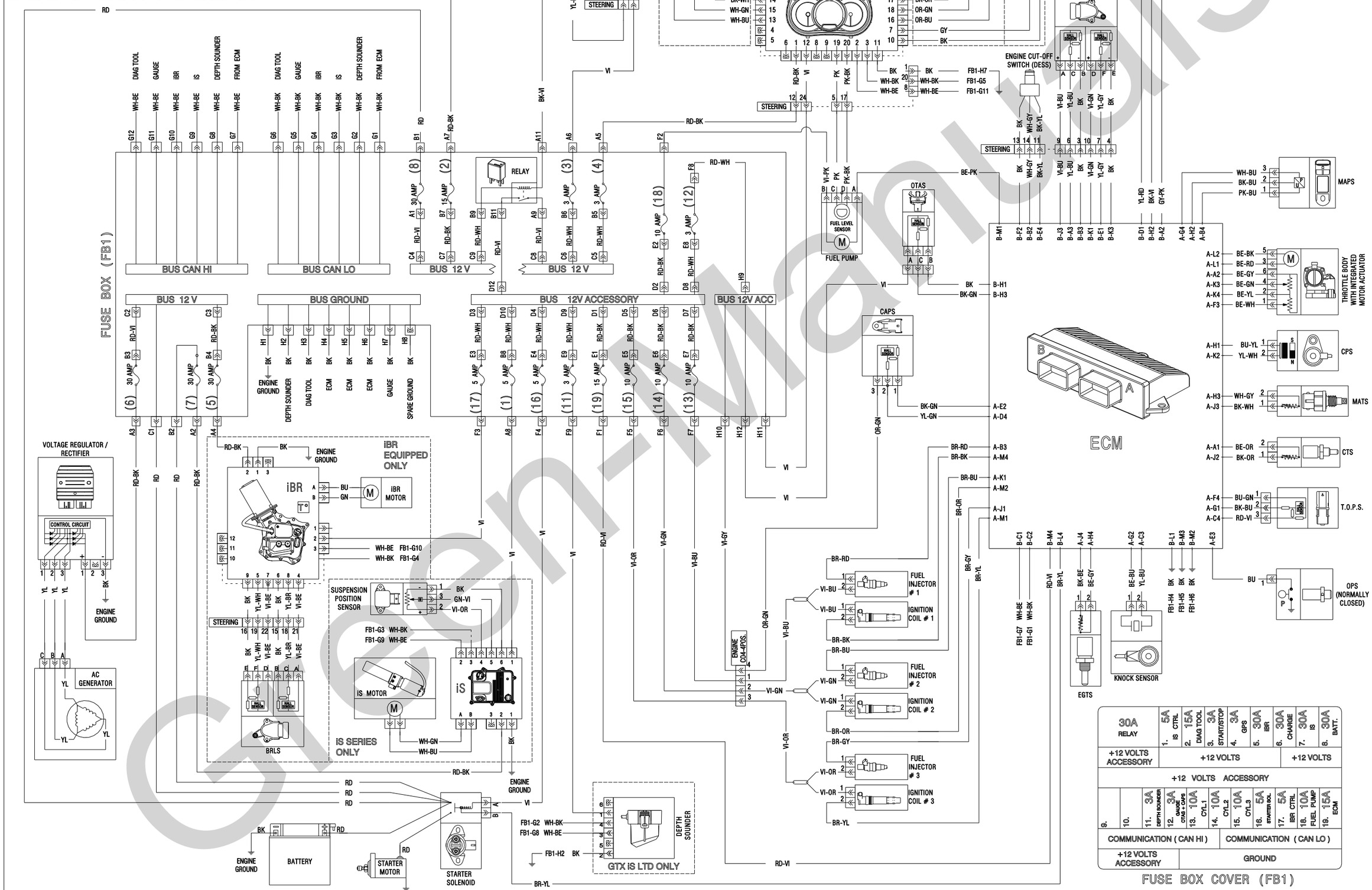

Green-Manuals

SEA-DOO®

BRP

2013
SHOP MANUAL
SUPPLEMENT



4-TEC Series

This Supplement must be used in conjunction with the 2012 Shop Manual P/N 219 100 647.

219 100 749

2013 Shop Manual Supplement

GTS/GTI™/GTR™/RXP™/
RXT™/GTX†/WAKE™
SERIES

SEA-DOO

BRP

TABLE OF CONTENTS

SAFETY NOTICE IV

INTRODUCTION V

01 MAINTENANCE

01 – MAINTENANCE SCHEDULE 3

02 ENGINE

05 – SUPERCHARGER (215 AND 260 ENGINES) 7

INSPECTION 9

SUPERCHARGER INLET CLEANLINESS 9

SUPERCHARGER CLUTCH SLIPPING MOMENT (ON ENGINE) 9

SUPERCHARGER CLUTCH SLIPPING MOMENT (BENCH TEST) 10

TROUBLESHOOTING 11

PROCEDURES 11

SUPERCHARGER 11

06 – INTERCOOLER (215 ENGINE) 23

PROCEDURES 24

INTERCOOLER 24

07 – INTERCOOLER (260 ENGINE) 27

MAINTENANCE 29

INTERCOOLER FLUSHING 29

PROCEDURES 29

INTERCOOLER 29

INTERCOOLER ATTACHMENTS 31

03 ELECTRONIC MANAGEMENT SYSTEMS

04 – COMMUNICATION TOOLS AND B.U.D.S. 33

GENERAL 33

TROUBLESHOOTING 33

DIAGNOSTIC TIPS 33

PROCEDURES 34

MPI-2 34

B.U.D.S. SOFTWARE 36

05 – DIAGNOSTIC AND FAULT CODES 39

GENERAL 39

MONITORING SYSTEM 39

FAULT CODES 44

FAULT CODE DIAGNOSTIC 47

GUIDELINES TO SOLVE SPECIFIC FAULT CODES 51

FAULT CODE TABLE 53

05 ELECTRICAL SYSTEM

01 – POWER DISTRIBUTION AND GROUNDS 77

GENERAL 77

POWER DISTRIBUTION DIAGRAM 77

FUSE BOX 78

RELAY 80

GROUNDS 80

06 – INFORMATION CENTER (GAUGE) 81

GENERAL 82

INFORMATION CENTER (GAUGE) (GTS) 82

INFORMATION CENTER (GAUGES) (GTI/GTR/WAKE) 83

INFORMATION CENTER (GTX, RXT, WAKE PRO) 92

INFORMATION CENTER (RXP-X) 102

TABLE OF CONTENTS

05 ELECTRICAL SYSTEM (cont'd)

06 – INFORMATION CENTER (GAUGE) (cont'd)

GENERAL (cont'd)

OPERATING MODES 109
MULTIFUNCTION DISPLAY MESSAGES 119
TROUBLESHOOTING 122
DIAGNOSTIC TIPS 122
TROUBLESHOOTING GUIDELINES 122
PROCEDURES 124
INFORMATION CENTER 124
GAUGE SUPPORT (RXT, GTX AND WAKE PRO) 135
MODE/SET AND UP/DOWN ARROW BUTTONS 136
WATER TEMPERATURE SENSOR 141
DEPTH SOUNDER 141

06 STEERING AND PROPULSION

02 – iBR AND VTS 145
GENERAL 148
SYSTEM DESCRIPTION (iBR) 148
SYSTEM DESCRIPTION (VTS) 151
ADJUSTMENT 153
IBR NEUTRAL ADJUSTMENT 153
MAINTENANCE 153
iBR GATE BACKLASH CHECK 153
FRICTION SLEEVE REPLACEMENT 155
INSPECTION 155
IBR SYSTEM FUNCTIONAL TEST 155
VTS FUNCTIONAL TEST 156
TROUBLESHOOTING 157
TESTING SEQUENCE 157
PROCEDURES 158
iBR LEVER SENSOR (BRLS) 158
iBR ACTUATOR 162
iBR GATE 174
U-ARM 180
iBR GATE SUPPORT PLATES 180
VTS CONTROL BUTTON 184

07 BODY

04 – BODY (GTS/GTI/GTR/WAKE) 189
PROCEDURES 196
GELCOAT 196
DECALS 196
CARPETS 196
STORAGE COMPARTMENT COVER 196
STORAGE COMPARTMENT COVER HINGE 197
GAUGE TRIM 198
LATERAL TRIM PANEL 199
MIRROR SUPPORT 200
MIRRORS 201
CONSOLE 201
GLOVE BOX COVER 202
SEAT 202
SEAT LATCH 202
REAR HANDLE 202

07 BODY (cont'd)
04 – BODY (GTS/GTI/GTR/WAKE) (cont'd)
PROCEDURES (cont'd)
BUMPER 203
VENTILATION DUCT 203
WAKE PYLON (WAKE) 204
05 – BODY (RXT/GTX/WAKE PRO) 209
PROCEDURES 222
GELCOAT 222
DECALS 224
CARPETS 225
STORAGE COMPARTMENT COVER 225
GLOVE BOX COVER 226
SEAT 227
SEAT LATCH 228
MIRRORS 228
BUMPERS 229
BODY COVER 231
FRONT BODY MODULE 233
SPEED-TIE UNIT 233
BOARDING PLATFORM (iS AND aS MODELS) 243
DECK EXTENSION (iS AND aS MODELS) 245
MOVING DECK (iS AND aS MODELS) 246
FRONT GRILLE (iS AND aS MODELS) 253
SPLASH DEFLECTOR (iS AND aS MODELS) 254
REAR VENTILATION BOX (iS AND aS MODELS) 254
FRONT VENTILATION BOX (iS AND aS MODELS) 254
AIR INTAKE DUCT (iS AND aS MODELS) 255
REAR ACCESS PANELS (MODELS WITHOUT iS OR aS) 255
WAKE PYLON (WAKE PRO 215) 256

08 TECHNICAL SPECIFICATIONS
01 – GTS 130 AND GTI 130 261
02 – GTI 155 AND WAKE 155 267
03 – GTR 215 273
04 – GTX 155/215/260 279
05 – RXT 260 287
06 – WAKE PRO 215 293
07 – RXP - X 260 299

09 WIRING DIAGRAM
01 – WIRING DIAGRAM INFORMATION 305
GENERAL 305
WIRING DIAGRAM LOCATION 305
WIRING DIAGRAM CODES 305

SAFETY NOTICE

This document has been prepared as a guide to correctly service and repair specific systems for the 2013 Sea-Doo® watercraft as described in the model list in the *INTRODUCTION*.

This edition was primarily published to be used by technicians who are already familiar with all service procedures relating to BRP products. Mechanical technicians should attend training courses given by BRPTI.

Please note that the instructions will apply only if proper hand tools and special service tools are used.

The contents of this document depicts parts and procedures applicable to the particular product at the time of writing. Service and Warranty Bulletins may be published to update the content of this document. Dealer modifications that were carried out after manufacturing of the product, whether or not authorized by BRP, are not included.

In addition, the sole purpose of the illustrations throughout the document, is to assist identification of the general configuration of the parts. They are not to be interpreted as technical drawings or exact replicas of the parts.

The use of BRP parts is most strongly recommended when considering replacement of any component. Dealer and/or distributor assistance should be sought in case of doubt.

The engines and the corresponding components identified in this document should not be utilized on product(s) other than those mentioned in this document.

It is understood that certain modifications may render use of the watercraft illegal under existing federal, provincial and state regulations.

This document emphasizes particular information denoted by the following wording and symbols:

⚠ WARNING

Indicates a potential hazard that, if not avoided, could result in serious injury or death.

⚠ CAUTION Indicates a hazardous situation which, if not avoided, could result in minor or moderate injury.

NOTICE **Indicates an instruction which, if not followed, could result in severe damage to vehicle components or other property.**

NOTE: Indicates supplementary information required to fully complete an instruction.

Although the mere reading of such information does not eliminate the hazard, your understanding of the information will promote its correct use.

Always observe common shop safety practice.

Unless otherwise noted, the engine must be stopped and the tether cord must be removed prior to perform any services.

Before carrying out any inspection or maintenance procedure on the watercraft, wait until the engine and exhaust have cooled down to avoid potential burns.

Torque wrench tightening specifications must be strictly adhered to. Use the torque values and service products as in the exploded views or in the procedures when noted.

Locking devices when removed must be replaced (e.g.: locking tabs, elastic stop nuts, self-locking fasteners, cotter pins, etc.).

Hoses, cables and locking ties removed during a procedure must be reinstalled as per factory standards.

When ordering parts always refer to the specific model *PARTS CATALOG*.

We strongly recommend that any services be carried out and/or verified by a highly skilled professional mechanic.

It is understood that this document may be translated into another language. In the event of any discrepancy, the English version shall prevail.

BRP disclaims liability for all damages and/or injuries resulting from the improper use of the contents.

INTRODUCTION

This 2013 shop manual supplement must be used in conjunction with the *2012 Sea-Doo SHOP MANUAL 4-TEC SERIES (P/N 219 100 647)*. Refer to the 2012 Manual when a particular system is not covered in this supplement.

MODEL	MODEL NUMBER
GTI™ Series	
GTI	23DA, 23DB, 23DC, 23DD
GTI SE	24DA, 24DB, 24DC, 30DA, 30DB
GTI LTD	39DA, 39DB
GTR™ Series	
GTR	36DA, 36DB
GTS™ Series	
GTS	43DA, 43DB
GTS RENTAL	25DB
GTX™ Series	
GTX	38DA, 38DB, 42DA, 42DB
GTX S	33DA, 33DB
GTX LIMITED iS	18DA, 18DB
RXP™ Series	
RXP-X	21DA
RXP-X RS	21DB
RXT™ Series	
RXT	17DA
RXT RS	17DB
RXT-X	31DA
RXT-X RS	31DB
RXT-X aS	41DA
RXT-X RS aS	41DB
WAKE Series	
WAKE 155	35DA, 35DB
WAKE PRO	26DA, 26DB

The information and component/system descriptions contained in this document are correct at time of writing. BRP however, maintains a policy of continuous improvement of its products without imposing upon itself any obligation to install them on products previously manufactured.

Due to late changes, there may be some differences between the manufactured product and the description and/or specifications in this document.

BRP reserves the right at any time to discontinue or change specifications, designs, features, models or equipment without incurring obligation.

SERVICE TOOLS INDEX

4-PIN SOCKET
(P/N 529 035 948)

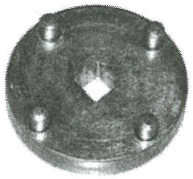

Page: 14, 17

BEARING SUPPORT/PUSHER
(P/N 529 035 950)



Page: 16–17

CAMSHAFT LOCKING TOOL
(P/N 529 035 839)



Page: 9

DIAGNOSTIC HARNESS
(P/N 529 036 188)

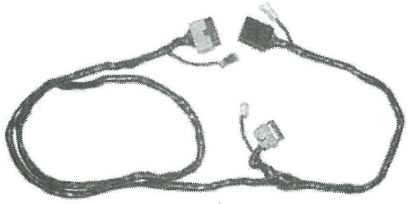

Page: 128, 131–132, 159, 161

FLUKE 115 MULTIMETER
(P/N 529 035 868)



Page: 127, 129, 131, 133, 137, 159, 166–167, 185

LARGE HOSE PINCHER
(P/N 529 032 500)

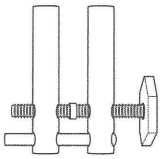

Page: 30

MPI-2 DIAGNOSTIC CABLE
(P/N 710 000 851)



Page: 35

MPI-2 INTERFACE CARD
(P/N 529 036 018)

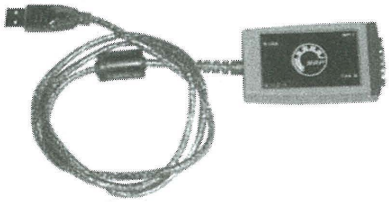

Page: 35–36

NEEDLE BEARING PUSHER
(P/N 529 036 237)



Page: 19

SUPERCHARGER GEAR HOLDER
(P/N 529 036 025)



Page: 10

SUPERCHARGER RETAINING KEY
(P/N 529 036 027)



Page: 13–14, 20

SUPERTANIUM DRILL BIT 3/16"
(P/N 529 031 800)



Page: 200–201, 204, 234

SUPPORT PLATE
(P/N 529 035 947)

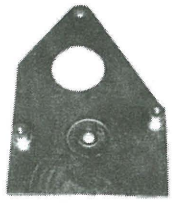

Page: 10, 13, 16–17

TORX ADAPTER
(P/N 529 035 938)



Page: 12, 21

VACUUM/PRESSURE PUMP
(P/N 529 021 800)

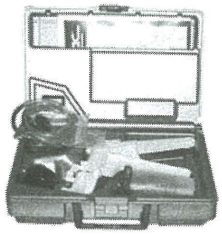

Page: 24, 30

MAINTENANCE SCHEDULE

Maintenance is very important for keeping the watercraft in a safe operating condition. The watercraft should be serviced as per the maintenance schedule.

Disregard the information pertaining to the following systems if the watercraft is not equipped with these features:

- iBR (intelligent Brake and Reverse)
- iS (intelligent Suspension)
- aS (adjustable Suspension).

Carry out all maintenance as listed in the schedule whenever the hours or time of each column is reached.

⚠ WARNING

Failure to properly maintain the watercraft according to the maintenance schedule and procedures can make it unsafe to operate.

The maintenance schedule does not exempt the pre-ride inspection.

A: ADJUST C: CLEAN I: INSPECT L: LUBRICATE R: REPLACE O: OPERATOR D: DEALER	FIRST 25 HOURS OR 6 MONTHS	EVERY 100 HOURS OR 1 YEAR	EVERY 200 HOURS OR 2 YEARS	TO BE PERFORMED BY	
PART/TASK					**NOTE**
ENGINE					
Engine oil and filter	R	R		D	(1) Every 10 hours in salt water use. (2) Spray an anti-corrosion lubricant to metallic components in engine compartment (3) Replace at 200 hours, irrespective of the number of years.
Rubber mounts	I	I		D	
Corrosion protection	L (1, 2)			O	
Supercharger clutch (215/260 engines)			R(3)	D	
EXHAUST SYSTEM					
Exhaust and intercooling system	I	I, C (4)		O/D	(4) Daily flushing in salt water or foul water use.
COOLING SYSTEM					
Hose and fasteners	I	I		D	—
Coolant	I		R	D	
FUEL SYSTEM					
iTC lever (5)		I, L		O/D	(5) See NOTE 1 after maintenance schedule.
Fuel cap, filler neck, fuel tank, fuel tank straps, fuel lines and connections	I	I (6)		D	(6) At storage period or after 100 hours of use whichever comes first.
Fuel system leak test	I	I		D	
Throttle body	I	I		D	
AIR INTAKE SYSTEM					
Air intake silencer	I	I		D	—
ELECTRONIC MANAGEMENT SYSTEMS					
Fault codes	I	I		D	—
ELECTRICAL SYSTEM					
Spark plugs	I	I	R	D	(7) Inspect once a month. Add electrolyte as required.
Ignition coils	I	I, L		D	
Electrical connections and fastening (ignition system, starting system, fuel injectors, fuse boxes etc.)		I		D	
Engine cut-off switch	I	I		D	
Monitoring beeper	I	I		D	
Battery and fasteners		I (7)		D	
STEERING SYSTEM					
Steering cable and connections	I	I		D	(8) Inspect operation
Steering nozzle bushings	I	I		D	
O.T.A.S. (8)	I	I		D	

A: ADJUST C: CLEAN I: INSPECT L: LUBRICATE R: REPLACE O: OPERATOR D: DEALER	FIRST 25 HOURS OR 6 MONTHS	EVERY 100 HOURS OR 1 YEAR	EVERY 200 HOURS OR 2 YEARS	TO BE PERFORMED BY	
PART/TASK					**NOTE**
PROPULSION SYSTEM					
Carbon ring and rubber boot (drive shaft)	I	I		D	(6) At storage period or after 100 hours of use whichever comes first. (9) Inspect each month (more often in salt water use) and change when necessary.
Impeller boot	I	I		D	
Impeller shaft seal, sleeve and O-ring		I (6)		D	
Drive shaft/impeller splines		I, L		D	
Sacrificial anode (if so equipped)		I (9)		D	
Impeller and impeller wear ring clearance	I	I		D	
Pump mounts	I	I		D	
iBR SYSTEM (intelligent Brake and Reverse)					
iBR lever (5)		I, L		O/D	(5) See NOTE 1 after maintenance schedule. (6) At storage period or after 100 hours of use whichever comes first. (10) See NOTE 2 after maintenance schedule.
iBR gate backlash	I	I		D	
iBR support plates	I	I		D	
iBR friction sleeves	I	I		D	
iBR connecting arms, sleeves and bushings	I	I		D	
iBR U lever, VTS trim ring, iBR gate and bushings	I	I		D	
iBR U arm retaining screws	I (10)	I (6) (10)		D	
iBR protective guard	I	I		D	
iS SYSTEM (intelligent Suspension)					
iS oil (11)		I		D	(11) Check pump reservoir oil level and for system leaks.
iS position sensor		I		D	
aS SYSTEM (adjustable Suspension)					
Nitrogen remote reservoir (adjustment knob, mounts)		I		D	—
HULL AND BODY					
Hull		I		O	—
Ride plate and water intake grate		I		O	
Bilge pump	I,C	I,C		O	—

NOTE 1: The iTC and iBR levers should be inspected by depressing and releasing the levers to check for freedom of movement. If any friction is felt, the lever must be taken apart, cleaned, inspected for wear and lubricated, refer to *INTELLIGENT THROTTLE CONTROL (ITC)* and *STEERING AND O.T.A.S.* subsections..

NOTE 2: Ensure proper torque of iBR U arm to iBR actuator shaft retaining screws. If retaining screws found loose, do not re-torque them. Replace them with new ones.

SUPERCHARGER (215 AND 260 ENGINES)

SERVICE TOOLS

Description	Part Number	Page
4-PIN SOCKET	529 035 948	14, 17
BEARING SUPPORT/PUSHER	529 035 950	16–17
CAMSHAFT LOCKING TOOL	529 035 839	9
NEEDLE BEARING PUSHER	529 036 237	19
SUPERCHARGER GEAR HOLDER	529 036 025	10
SUPERCHARGER RETAINING KEY	529 036 027	13–14, 20
SUPPORT PLATE	529 035 947	10, 13, 16–17
TORX ADAPTER	529 035 938	12, 21

SERVICE PRODUCTS

Description	Part Number	Page
ISOFLEX GREASE TOPAS NB 52	293 550 021	18
LOCTITE 243 (BLUE)	293 800 060	17–18, 20–21
LOCTITE 5910	293 800 081	20
SUPER LUBE GREASE	293 550 030	21

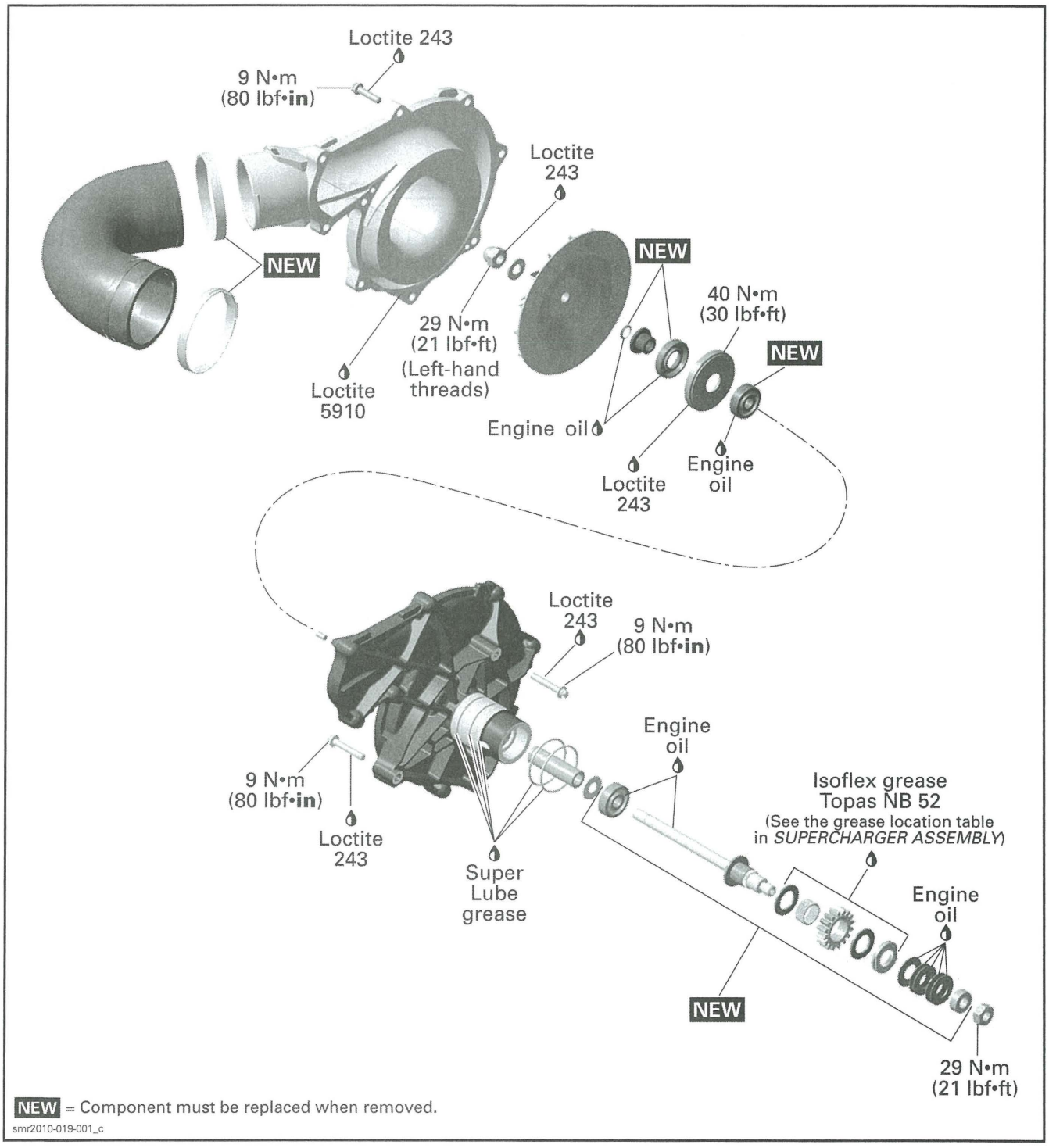

NEW = Component must be replaced when removed.

smr2010-019-001_c

INSPECTION

SUPERCHARGER INLET CLEANLINESS

NOTE: A lower than usual maximum RPM at full throttle might be caused by a dirty supercharger inlet.

To access supercharger. Refer to *SUPERCHARGER ACCESS* in this subsection.

Visually inspect supercharger inlet side for oil, salt or any other deposits.

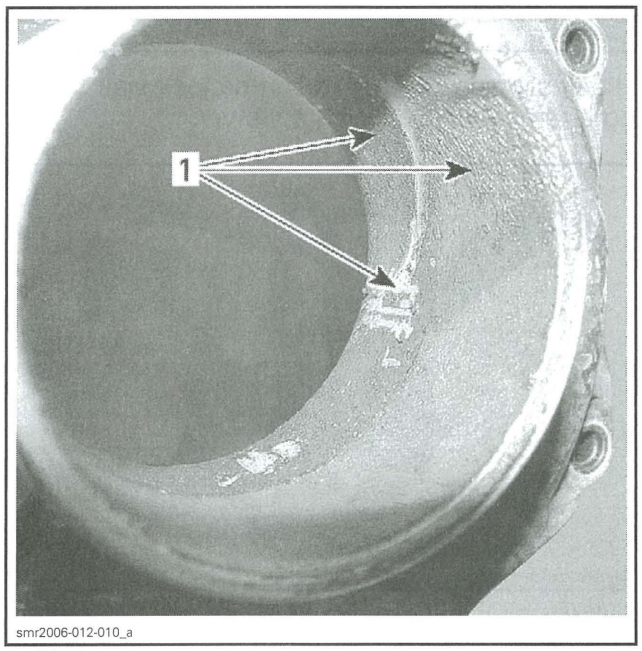

1. Dirt here

If dirt is found, proceed as follows.

1. Remove supercharger and perform the clutch slipping moment test. Inspect bearings and friction clutch. Replace bearings and clutch components as necessary.
2. Separate supercharger housing.

NOTE: Since supercharger is disassembled, it is recommended to completely inspect it.

3. Clean internal housing and turbine using a brush and cleaning solvent to get rid of oil deposits.
4. Blow dry with compressed air.

NOTICE **Do not let turbine spin when using compressed air.**

5. Complete usual assembly procedures as described in this subsection.

SUPERCHARGER CLUTCH SLIPPING MOMENT (ON ENGINE)

To access supercharger. Refer to *SUPERCHARGER ACCESS* in this subsection.

Remove cylinder head cover, refer to *CYLINDER HEAD* subsection.

Remove spark plugs.

Turn engine by rotating the supercharger nut counterclockwise until the position lines on oil separator cover are lined up as shown in the following illustration.

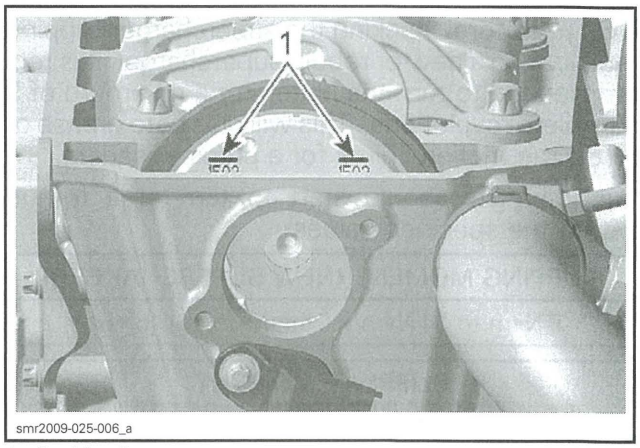

1. Position lines

Lock camshaft to prevent camshaft rotation while checking slipping moment of supercharger.

REQUIRED TOOL
CAMSHAFT LOCKING TOOL (P/N 529 035 839)

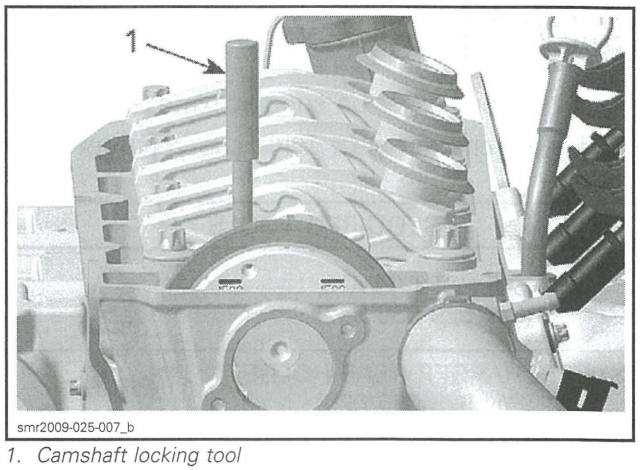

1. Camshaft locking tool

Check slipping moment counterclockwise by using a torque wrench with actual torque viewer. A mirror is useful to see the viewer.

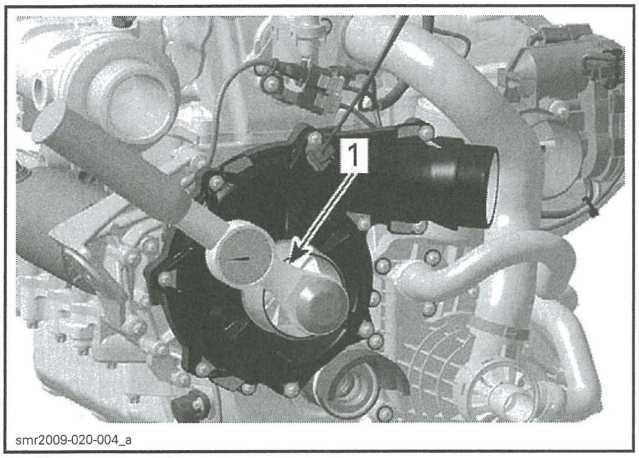

1. Torque wrench

NOTE: Before checking the supercharger slipping moment on a new or rebuilt supercharger, it is recommended to turn the clutch for a minimum of 3 complete revolutions. This will dissipate grease or oil on the friction shims for a precise reading.

Supercharger should start to turn at a torque within the specified values.

SLIPPING MOMENT (NEW SUPERCHARGER)
9 N•m to 14 N•m (80 lbf•**in** to 124 lbf•**in**)

SLIPPING MOMENT (BREAK-IN SUPERCHARGER)
8 N•m to 12 N•m (71 lbf•**in** to 106 lbf•**in**)

If the torque is not within specifications, repair supercharger clutch. Verify supercharger clutch components as per *SUPERCHARGER INSPECTION* in this subsection.

SUPERCHARGER CLUTCH SLIPPING MOMENT (BENCH TEST)

Mount supercharger on support plate.

Hold supercharger gear with supercharger gear holder.

REQUIRED TOOLS	
SUPPORT PLATE (P/N 529 035 947)	
SUPERCHARGER GEAR HOLDER (P/N 529 036 025)	

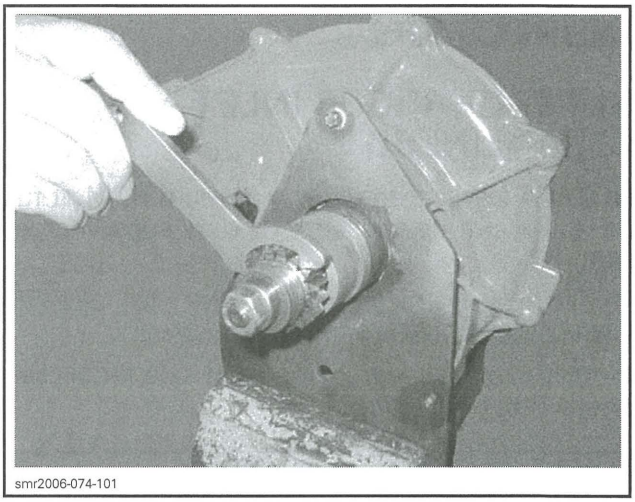

Check slipping moment counterclockwise by using a torque wrench with a viewer.

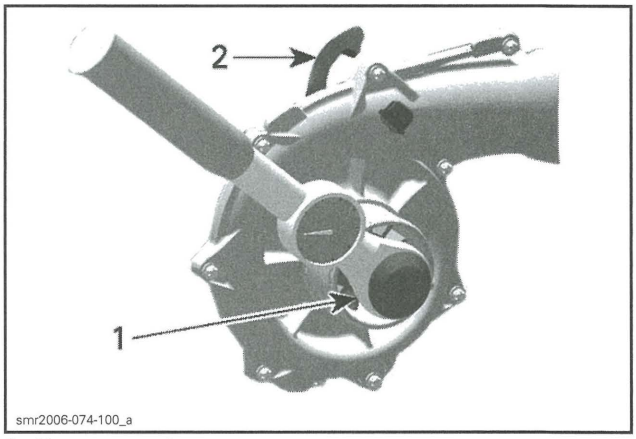

1. Torque wrench
2. Gear holder

NOTE: Before checking the supercharger slipping moment on a new or rebuilt supercharger, it is recommended to turn the clutch for a minimum of 3 complete revolutions. This will dissipate grease or oil on the friction shims for a proper reading.

Supercharger should start to turn at a torque within the specified values.

SLIPPING MOMENT (NEW SUPERCHARGER)
9 N•m to 14 N•m (80 lbf•**in** to 124 lbf•**in**)

SLIPPING MOMENT (BREAK-IN SUPERCHARGER)
8 N•m to 12 N•m (71 lbf•**in** to 106 lbf•**in**)

If the torque is not within specification, repair supercharger clutch. Verify supercharger clutch components as per *SUPERCHARGER INSPECTION* in this subsection.

TROUBLESHOOTING

The following is provided to help in diagnosing the probable source of troubles. It is a guideline and it should not be assumed to list all possible problems.

Always check for fault codes. If a fault code is detected, service the fault code first. Refer to *DIAGNOSTIC AND FAULT CODES* subsection.

ENGINE WILL NOT START (ENGINE DOES NOT TURN OVER)

1. **Supercharger seized or obstructed**
   - *Inspect and repair supercharger.*

ENGINE LACKS ACCELERATION OR POWER (DOES NOT REACH MAXIMUM RPM)

1. **Supercharger inlet is dirty**
   - *Check and clean supercharger inlet.*
   - *Check engine oil. Siphon excess of oil.*
2. **Supercharger slipping clutch defective**
   - *Check slipping clutch moment.*
   - *Repair supercharger if out of specification.*

PROCEDURES

SUPERCHARGER

Supercharger Access

On **models with suspension**, remove the moving deck. Refer to *BODY (RXT, GTX AND WAKE PRO)* subsection for proper procedure.

Remove the air intake silencer. Refer to the appropriate subsection according to model:

- *AIR INTAKE SYSTEM (MODELS WITHOUT SUSPENSION)*
- *AIR INTAKE SYSTEM (MODELS WITH SUSPENSION).*

Remove the air intake silencer support.

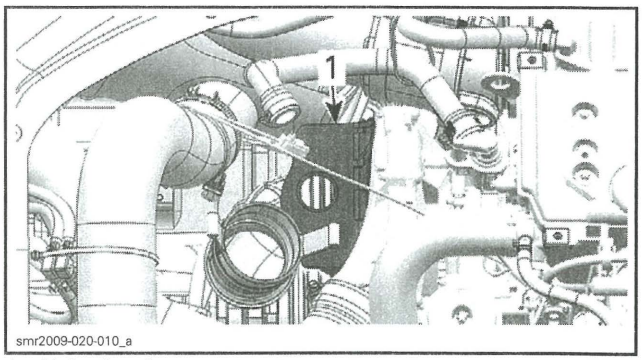

1. Air intake silencer support

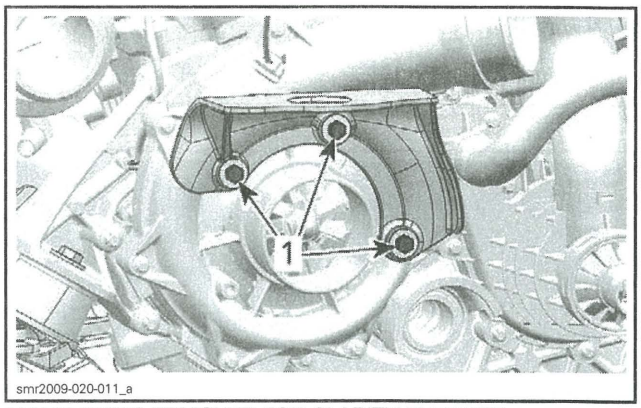

MANY PARTS REMOVED FOR CLARITY PURPOSE
1. Support screws

Supercharger Removal

Remove air inlet and outlet hoses from supercharger.

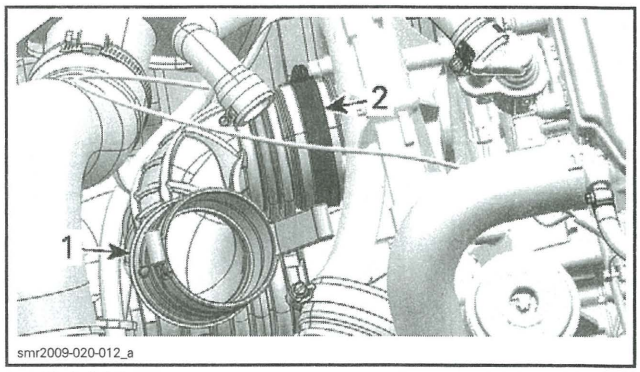

1. Air inlet hose
2. Hose clamp

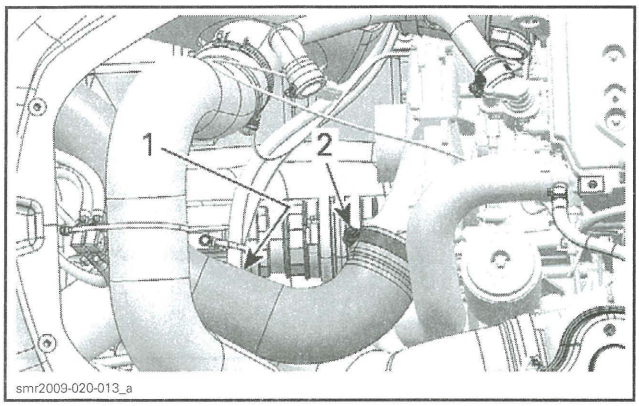

1. *Air outlet hose*
2. *Hose clamp*

Unscrew blow-by valve screws and move it aside to make room.

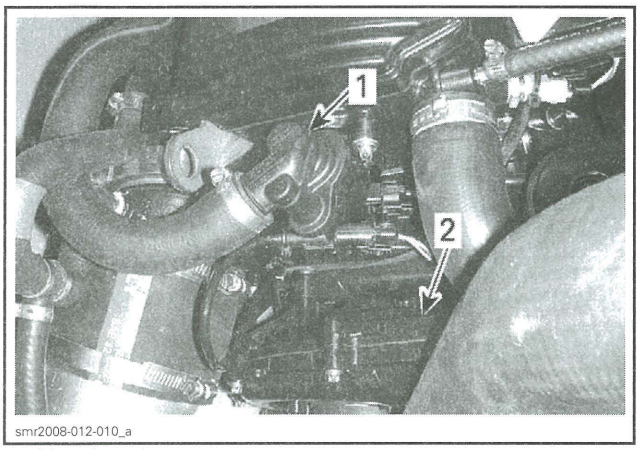

1. *Blow-by valve*
2. *Supercharger.*

Using a marker, trace a mark on rubber adapter and exhaust pipe.

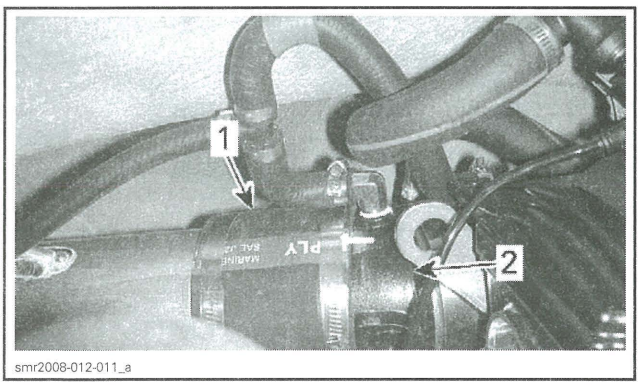

1. *Rubber adapter*
2. *Exhaust pipe*

Loosen clamp securing rubber adapter to exhaust pipe.

Detach muffler strap.

Move muffler back (± 5 cm (2 in)).

Remove retaining screws and pull out the supercharger.

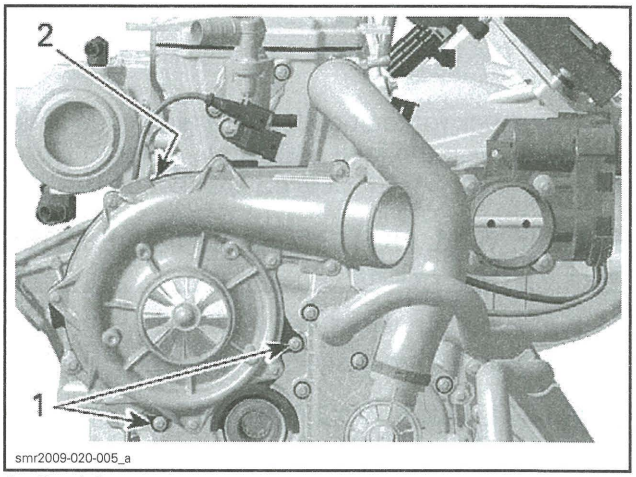

1. *Retaining screws*
2. *Upper retaining screw (hidden behind the supercharger)*

NOTE: Use the following tool to remove the upper retaining screw.

REQUIRED TOOL	
TORX ADAPTER (P/N 529 035 938)	

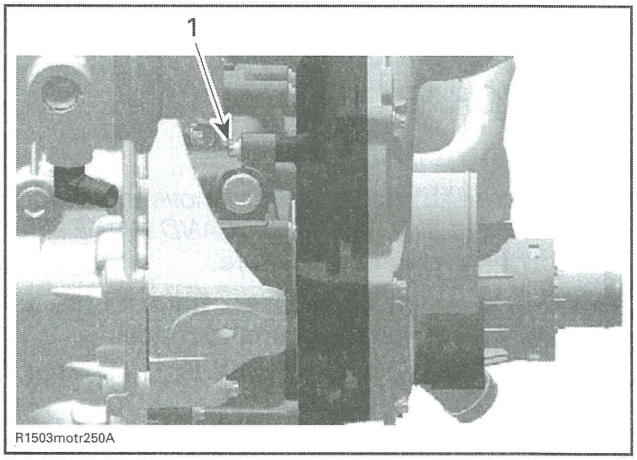

1. *Upper retaining screw*

Supercharger Disassembly

NOTICE **Be scrupulous when working on supercharger parts. Supercharger rotation reaches 45 000 RPM. Any modification, improper repair, assembly or damage on the parts, may result in damage of the supercharger. Strictly follow the described procedures.**

1. Secure the supercharger on its support plate.

REQUIRED TOOL
SUPPORT PLATE (P/N 529 035 947) 

2. Take apart supercharger housing.

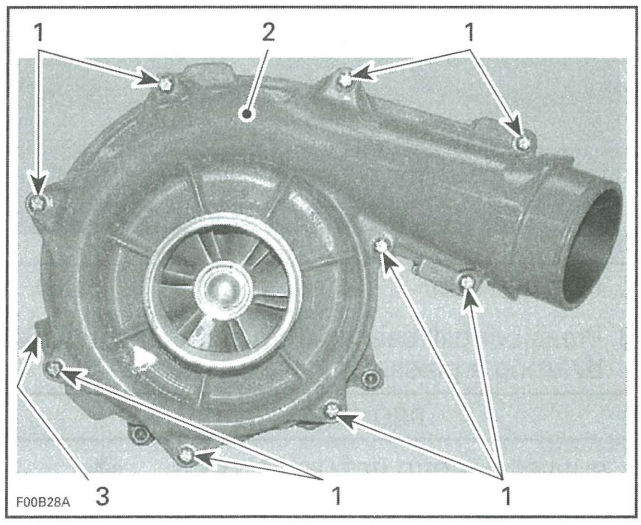

1. Retaining screws
2. Housing half (intake side)
3. Housing half (engine side)

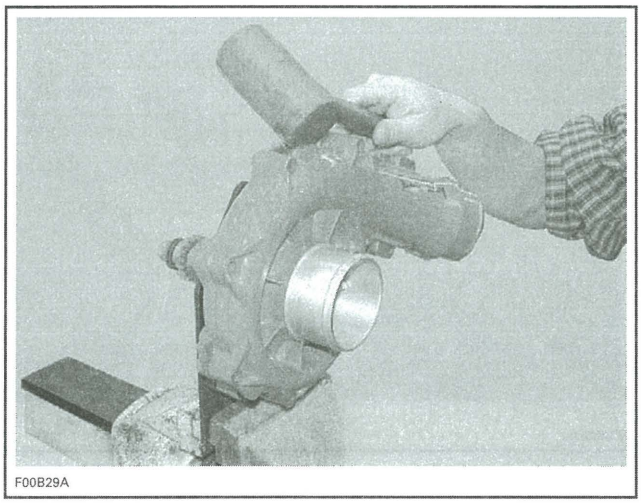

PLASTIC HAMMER

3. Loosen cap nut (turn **clockwise**) on supercharger shaft turbine side.

REQUIRED TOOL
SUPERCHARGER RETAINING KEY (P/N 529 036 027) 

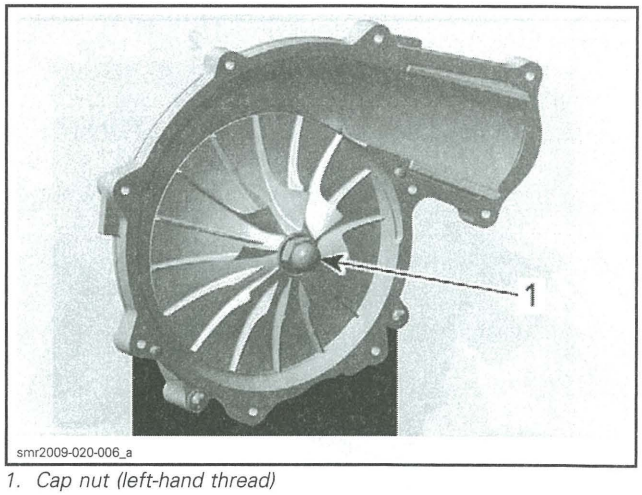

1. Cap nut (left-hand thread)

4. Remove washer, turbine, O-ring and step collar from supercharger shaft.

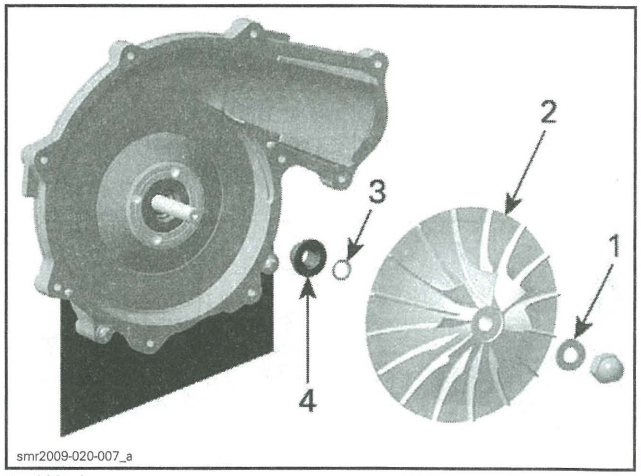

1. Washer
2. Turbine
3. O-ring
4. Step collar

5. Loosen nut on supercharger shaft engine side (turn **counterclockwise**).

REQUIRED TOOL
SUPERCHARGER RETAINING KEY (P/N 529 036 027) 

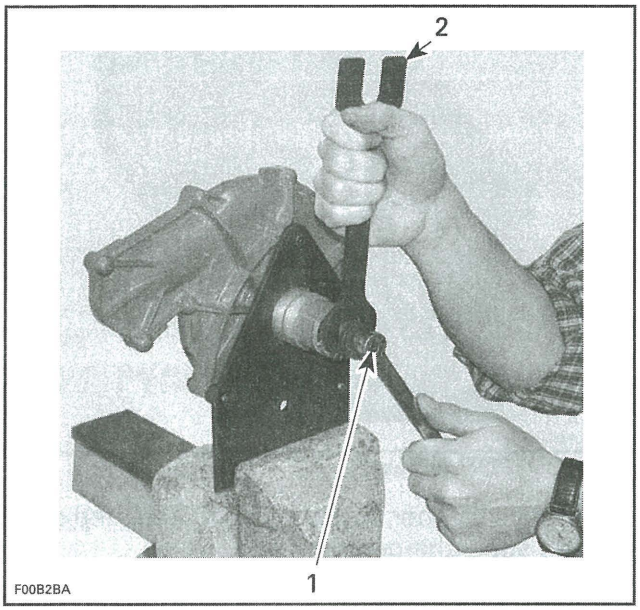

1. *Nut*
2. *Retaining key*

6. Remove L-ring, spring washers, lock washer, drive gear and needle pins by turning the supercharger upside down. Discard all needle pins.

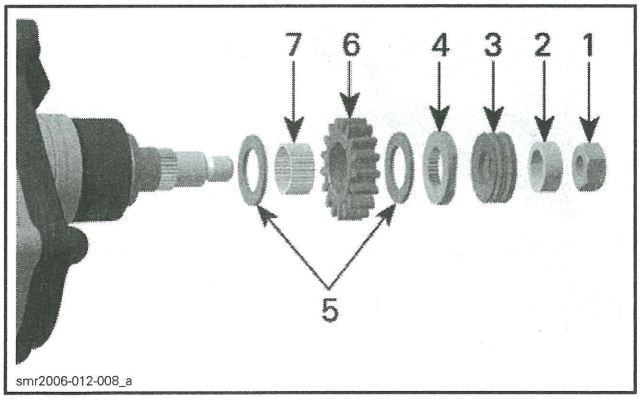

1. *Nut*
2. *L-ring*
3. *Spring washers (5x)*
4. *Lock washer*
5. *Friction shims*
6. *Drive gear*
7. *Needle pins (discard all)*

7. Carefully push out supercharger shaft towards engine side by using a press.

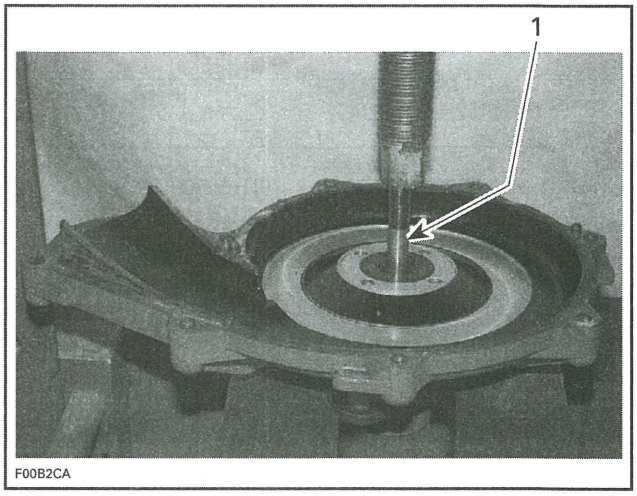

1. *Supercharger shaft*

8. Press out ball bearing from supercharger shaft by using a press.

REQUIRED TOOL	
SUPERCHARGER RETAINING KEY (P/N 529 036 027)	

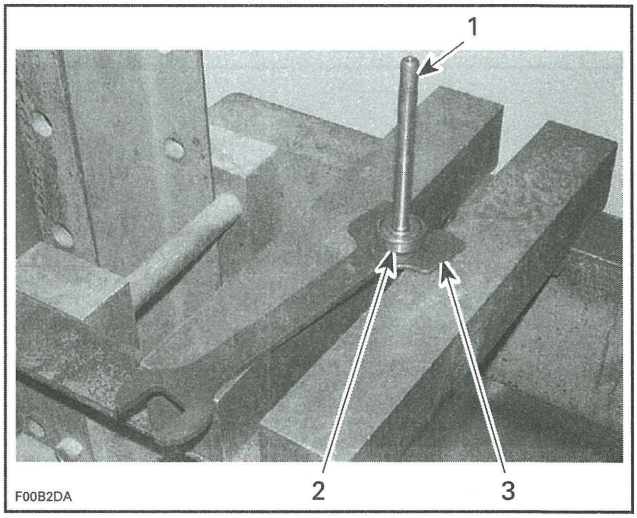

1. *Supercharger shaft*
2. *Ball bearing*
3. *Retaining key*

9. Remove retaining disc with seal from housing half (engine side).

REQUIRED TOOL	
4-PIN SOCKET (P/N 529 035 948)	

NOTE: It may be necessary to heat the housing with a heat gun to release the retaining disc.

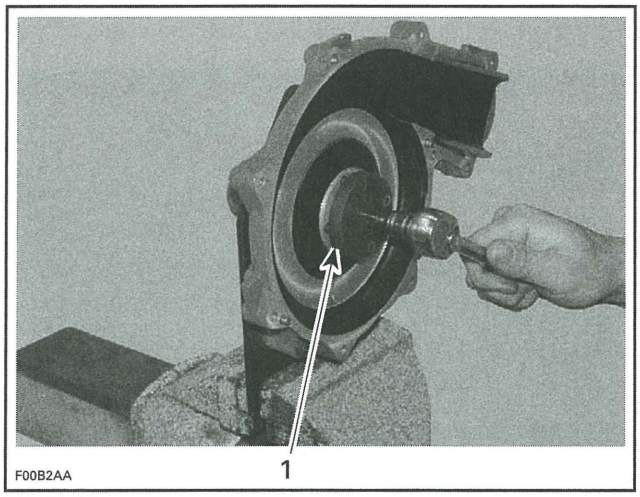

1. 4-pin socket

10. Discard the oil seal.
11. Remove and discard ball bearing from supercharger housing half (engine side) by using a press and a suitable bearing pusher.

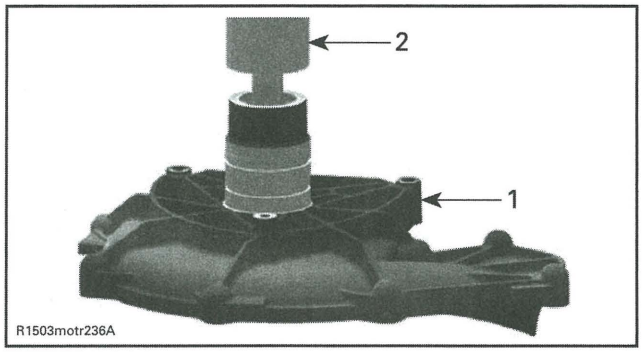

1. Supercharger housing half (engine side)
2. Bearing pusher

Supercharger Inspection

Supercharger Clutch Components and Gear

Check the wear limit on drive gear, lock washer and driven plate on supercharger shaft. Check drive gear for cracks.

NOTE: If parts are worn out or damaged, repair supercharger only by using supercharger repair kit.

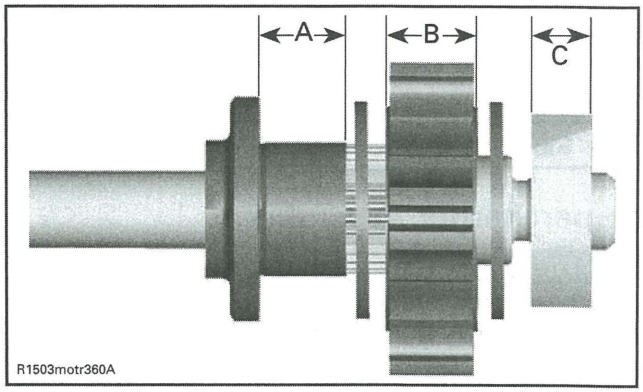

A. Driven plate journal depth
B. Drive gear thickness
C. Lock washer thickness

DRIVEN PLATE JOURNAL DEPTH	
NEW	14.460 mm to 14.500 mm (.5693 in to .5709 in)
SERVICE LIMIT	14.600 mm (.5748 in)

DRIVE GEAR THICKNESS	
NEW	11.000 mm to 11.050 mm (.4331 in to .435 in)
SERVICE LIMIT	10.900 mm (.4291 in)

LOCK WASHER THICKNESS	
NEW	4.050 mm to 4.150 mm (.1594 in to .1634 in)
SERVICE LIMIT	3.950 mm (.1555 in)

Spring Washer

Put spring washer package together as it is assembled on the supercharger shaft. Measure the height of the unloaded spring washer package.

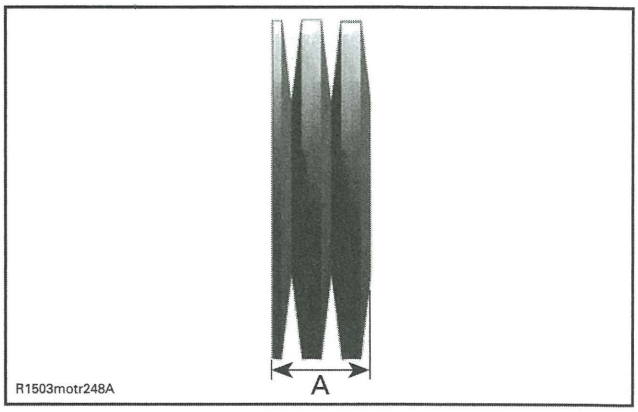

A. Spring washer package height

SPRING WASHER PACKAGE HEIGHT	
NEW	10.7 mm to 10.9 mm (.4213 in to .4291 in)
SERVICE LIMIT	10.2 mm (.4016 in)

Supercharger Assembly

NOTICE Every time when supercharger shaft has been removed, both ball bearings have to be replaced.

NOTICE Both ball bearings have to be installed with cages facing turbine side.

1. Install ball bearing on supercharger shaft. Hold bearing using the following tool.
   1.1 Apply enough engine oil on **NEW** ball bearing.
   1.2 Press the bearing. Use the following tool to hold the bearing.

REQUIRED TOOL	
SUPPORT PLATE (P/N 529 035 947)	

NOTICE Ensure to position ball bearing against protrusion of support plate for the installation. This way, the installation pressure will be applied to the inner race and will not be transmitted to the bearing balls which would otherwise shorten the bearing life.

NOTICE To install ball bearings and supercharger shaft always use a press, never use any beating force like a hammer.

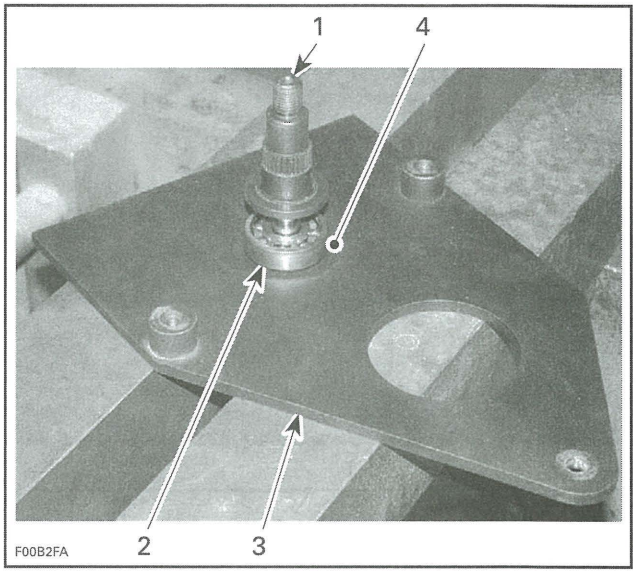

1. Supercharger shaft
2. Ball bearing
3. Bearing support plate
4. Protrusion of support plate on this side (underneath inner race)

2. Press in the ball bearing in supercharger housing half (engine side).
   2.1 Apply enough engine oil on **NEW** ball bearing.
   2.2 Press the bearing using the following tool.

REQUIRED TOOL	
BEARING SUPPORT/PUSHER (P/N 529 035 950)	

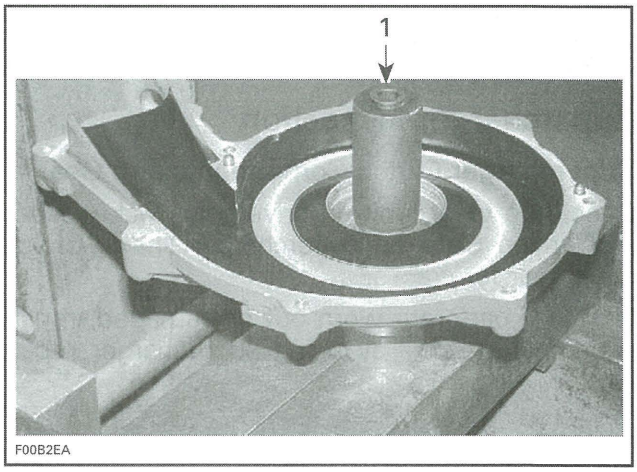

1. Bearing support/pusher

3. Secure the supercharger housing plate (engine side) in a vice.

REQUIRED TOOL	
SUPPORT PLATE (P/N 529 035 947)	

4. Apply LOCTITE 243 (BLUE) (P/N 293 800 060) on retaining disc. If a new retaining disc is used, the threads are coated with a self-locking product.
5. Install the retaining disc in supercharger housing half.

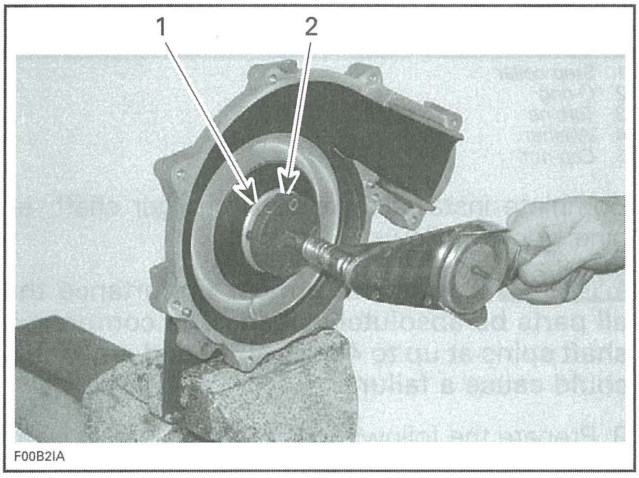

1. Retaining disc
2. 4-pin socket

REQUIRED TOOL	
4-PIN SOCKET (P/N 529 035 948)	

TIGHTENING TORQUE	
Retaining disc	40 N•m (30 lbf•ft)

6. Press supercharger shaft in housing half (engine side).
   6.1 Properly support bearing using the following tools under supercharger housing half.

REQUIRED TOOLS	
SUPPORT PLATE (P/N 529 035 947)	
BEARING SUPPORT/PUSHER (P/N 529 035 950)	

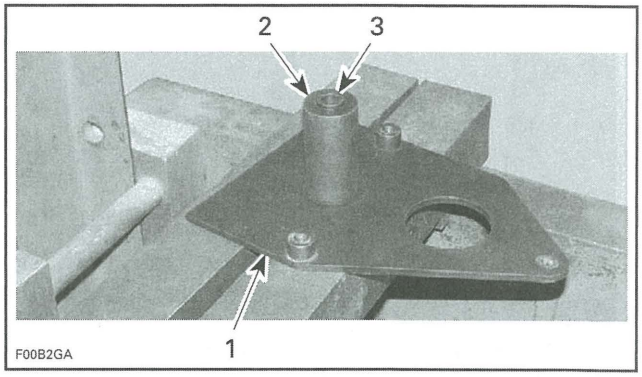

1. Support plate
2. Bearing support/pusher
3. Protrusion here

NOTICE **Before pressing in the supercharger shaft, be sure to properly support the inner race of ball bearing in supercharger housing half with the recommended tool. This way, the installation pressure will be applied to the inner race and will not be transmitted to the bearing balls which would otherwise shorten the bearing life.**

6.2 Apply heat outside of the housing with a heat gun to expand its diameter prior to inserting the shaft. Ensure there is no O-ring on the housing half prior to heating.

6.3 Apply engine oil on supercharger shaft. Press shaft with thrust washer and distance sleeve together in supercharger housing half.

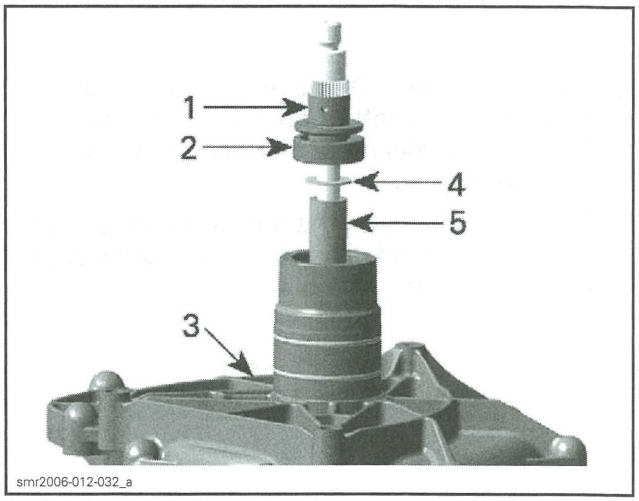

1. Compressor shaft
2. Ball bearing
3. Supercharger housing half
4. Thrust washer
5. Distance sleeve

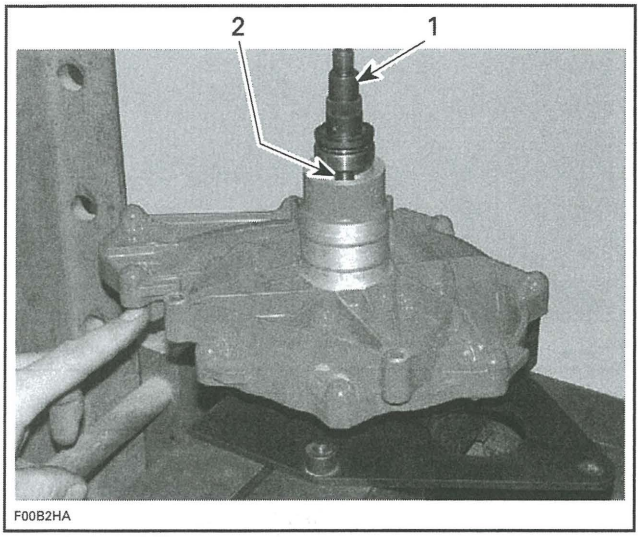

1. Supercharger shaft
2. Distance sleeve

7. Apply engine oil on seal and push into retaining disc by hand.

NOTE: Always use a NEW oil seal when assembling the supercharger.

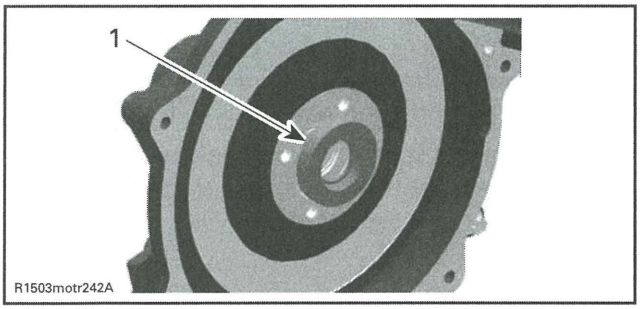

1. Oil seal

8. Install step collar, O-ring, turbine and washer on supercharger shaft. Apply LOCTITE 243 (BLUE) (P/N 293 800 060) on cap nut and temporary finger tight cap nut.

NOTE: The cap nut on the supercharger shaft has a left-handed thread. The Loctite has to be applied in a small dose into the nut.

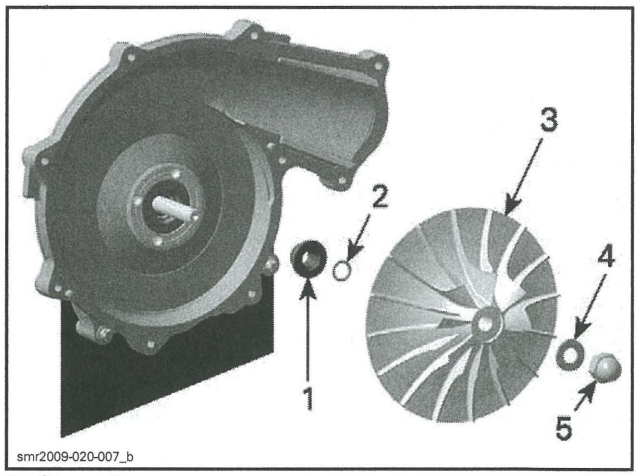

1. Step collar
2. O-ring
3. Turbine
4. Washer
5. Cap nut

Complete installation of supercharger shaft, engine side as follows:

NOTICE It is of the utmost importance that all parts be absolutely clean. The compressor shaft spins at up to 45 000 RPM and any debris could cause a failure.

9. Prepare the following parts for assembly by applying ISOFLEX GREASE TOPAS NB 52 (P/N 293 550 021) as shown in the next illustrations.

NOTICE No other grease can be used, otherwise damage to needle bearing will occur.

Shaft (needle bearing seat and collar)	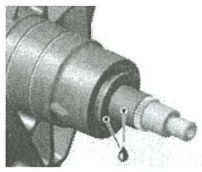
Drive gear (inner diameter)	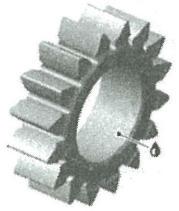
Friction shims (inner diameter and both sides)	
Lock washer (inner splines and friction shim thrust surface)	

10. Put the first friction shim on a workbench.

NOTICE Manipulate friction shims with care, those parts are sensitive.

11. Put the drive gear on the friction shim.
12. Install the **NEW** needle bearing in drive gear.
    12.1 Position the needle bearing on the drive gear.

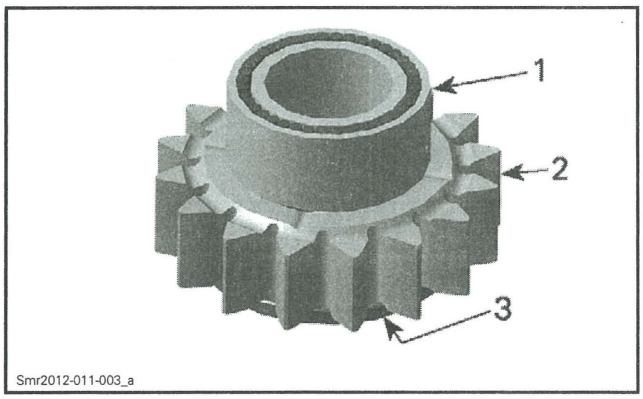

1. Needle bearing
2. Drive gear
3. Friction shim

    12.2 Push the needle pins with inner plastic cage into the drive gear.

REQUIRED TOOL	
NEEDLE BEARING PUSHER (P/N 529 036 237)	

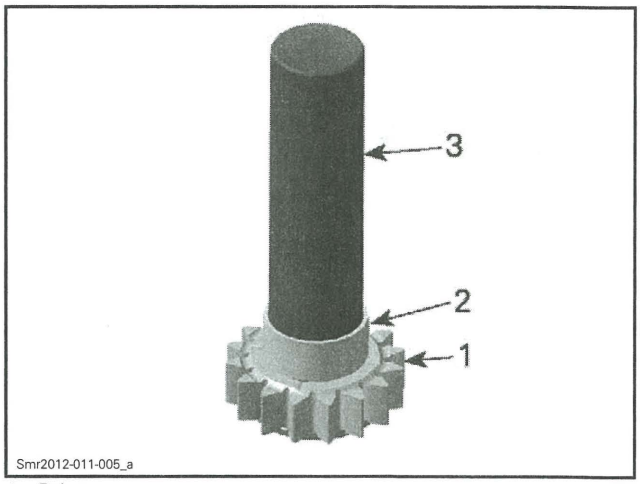

1. Drive gear
2. Outer plastic cage
3. Needle bearing pusher

    12.3 Remove needle bearing pusher and discard outer plastic cage.
    12.4 Check if all 40 needle pins are in place.

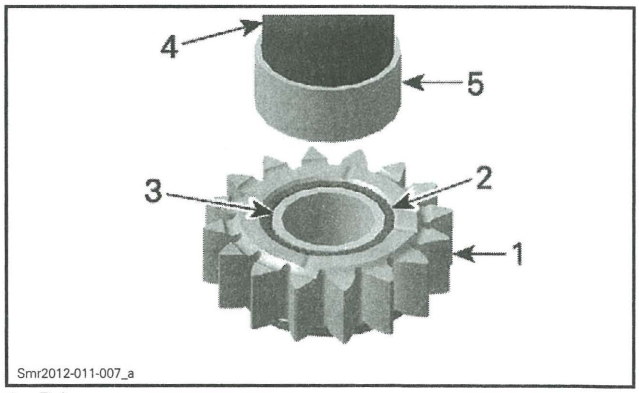

1. Drive gear
2. 40 needle pins
3. Inner plastic cage
4. Needle bearing pusher
5. Outer plastic cage

13. Place the second friction shim on the drive gear.
14. Install the package consisting of friction shim, drive gear with needle bearing and friction shim on the hub side of the compressor shaft.

NOTE: The inner plastic cage is pushed out upon installation on compressor shaft.

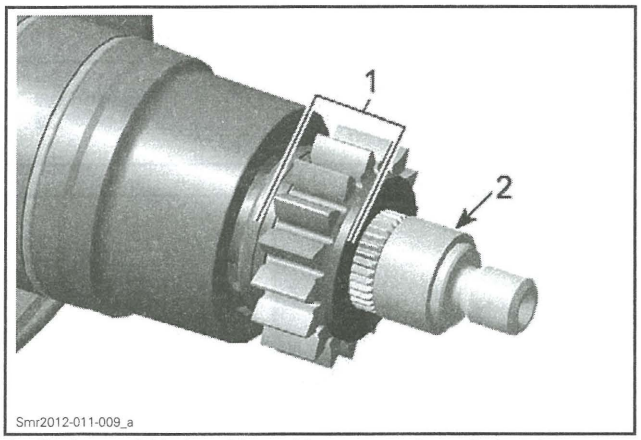

1. *Package of friction shims, drive gear and needle bearing*
2. *Inner plastic cage*

15. Discard the inner plastic cage and install the lock washer.
16. Apply engine oil to the spring washers.
17. Position the spring washers as per illustration.

NOTICE When installing the spring washers, take care of the exact installation direction of the washers.

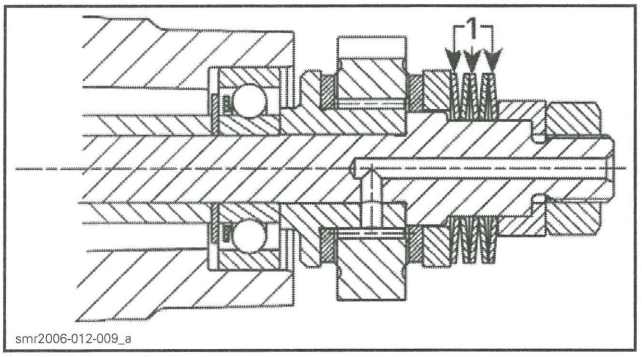

1. *Spring washers*

18. Install the L-ring on the compressor shaft.
19. Apply LOCTITE 243 (BLUE) (P/N 293 800 060) on the hexagonal nut threads.

TIGHTENING TORQUE	
Hexagonal nut	29 N•m (21 lbf•ft)

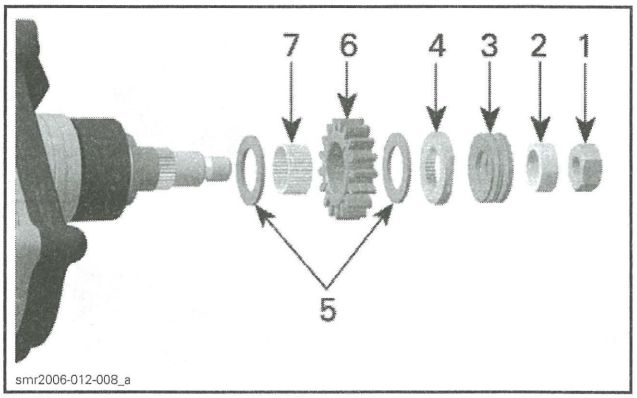

1. *Nut*
2. *L-ring*
3. *Spring washers*
4. *Lock washer*
5. *Friction shims*
6. *Drive gear*
7. *Needle bearing*

NOTE: The L-ring will preload the spring washers.

20. Hold the lock washer of the supercharger shaft (engine side) and tighten the cap nut.

REQUIRED TOOL
SUPERCHARGER RETAINING KEY (P/N 529 036 027)

TIGHTENING TORQUE	
Cap nut	29 N•m (21 lbf•ft)

21. Apply LOCTITE 5910 (P/N 293 800 081) on supercharger housing sealing surface.

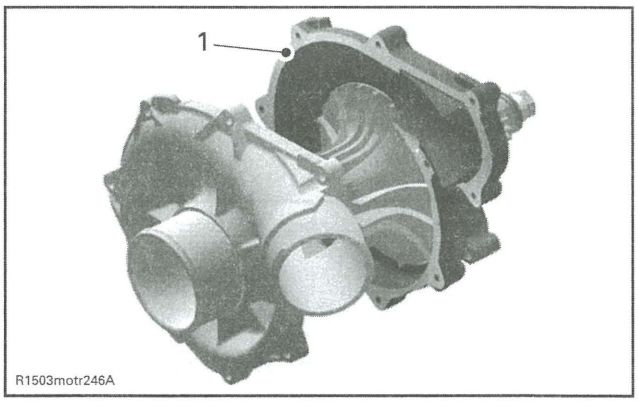

1. *Apply Loctite 5910 on sealing surface*

22. Assemble supercharger housing halves.
    - 22.1 Apply LOCTITE 243 (BLUE) (P/N 293 800 060) on retaining screws.
    - 22.2 Tighten supercharger housing halves screws according to the following sequence.

TIGHTENING TORQUE	
Supercharger housing halves screws	9 N•m (80 lbf•**in**)

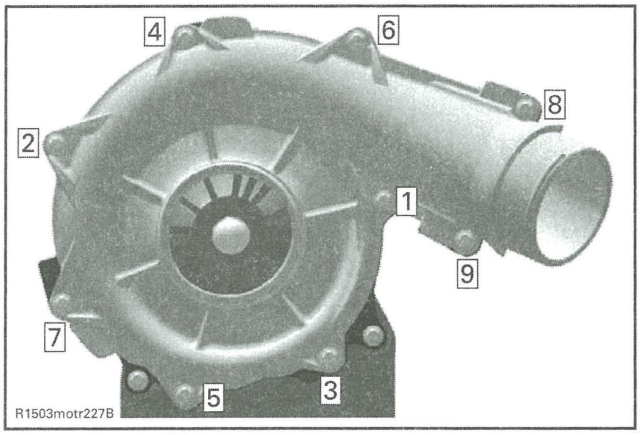

SUPERCHARGER TIGHTENING SEQUENCE

23. Verify the clutch slipping moment. Refer to *SUPERCHARGER CLUTCH SLIPPING MOMENT (BENCH TEST)* in this subsection.

Supercharger Installation

1. Grease sealing surface between supercharger and PTO housing with SUPER LUBE GREASE (P/N 293 550 030).

NOTE: Ensure O-rings are installed.

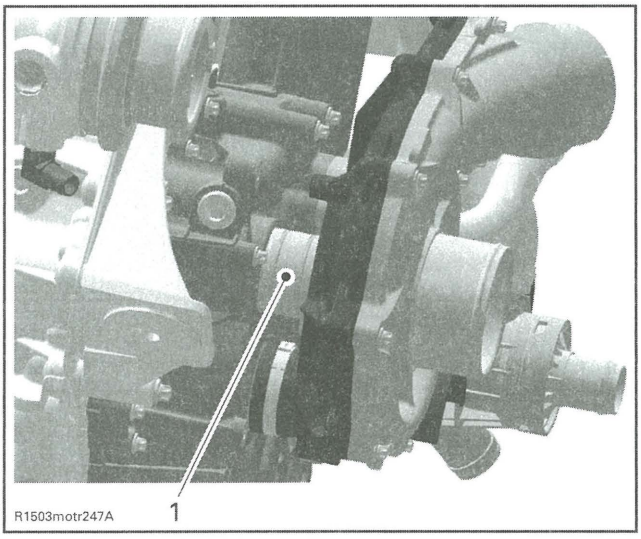

1. Super Lube grease

2. Install supercharger on PTO housing.
3. Apply LOCTITE 243 (BLUE) (P/N 293 800 060) on the retaining screws.
4. Tighten supercharger retaining screws to specifications.

TIGHTENING TORQUE	
Supercharger retaining screws	9 N•m (80 lbf•**in**)

NOTE: For the upper retaining screw the following tool must be used mounted 90° to torque wrench.

REQUIRED TOOL	
TORX ADAPTER (P/N 529 035 938)	

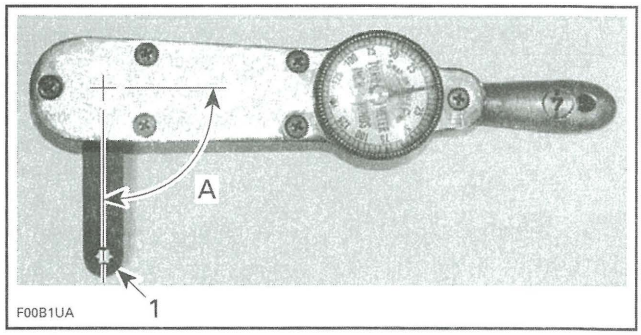

1. Torx adapter perpendicular to torque wrench
A. 90°

NOTICE Not installing the tool as shown will change the torque applied to the screw.

5. After complete installation of the supercharger, the slipping moment has to be rechecked. Refer to *SUPERCHARGER CLUTCH SLIPPING MOMENT (ON ENGINE)* at the beginning of this subsection.

INTERCOOLER (215 ENGINE)

SERVICE TOOLS

Description	Part Number	Page
VACUUM/PRESSURE PUMP	529 021 800	24

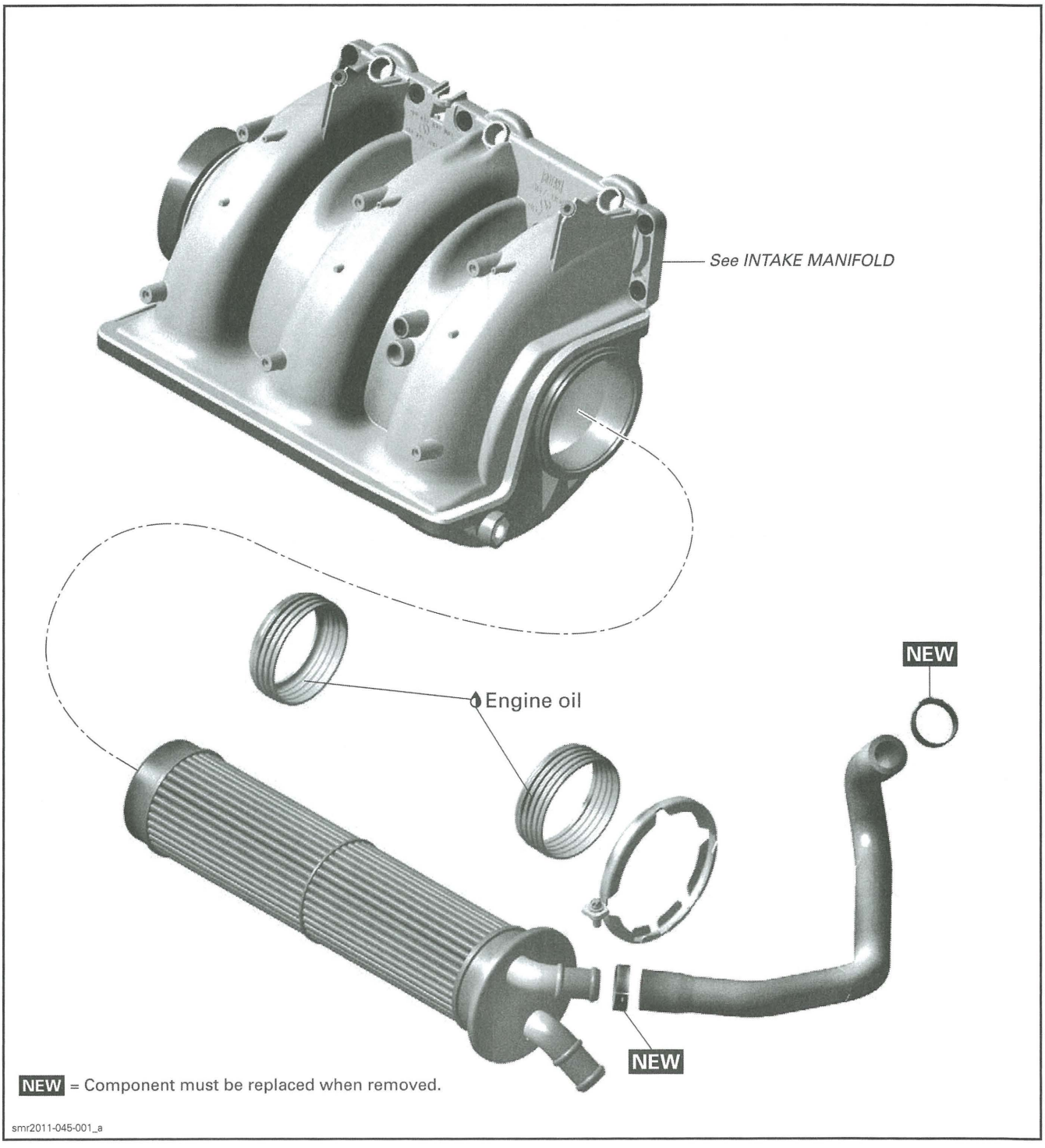

PROCEDURES

INTERCOOLER

Intercooler Leak Test

Perform intercooler leak test when engine looses performance, when there is white exhaust smoke or when temperature in exhaust system is to high.

⚠ WARNING

Let engine cool down prior to perform leak test. Direct contact with hot engine may result in skin burn.

NOTE: The inspection can be done while intercooler remains installed in intake manifold.

Remove:
- Outlet hose from exhaust manifold
- Inlet hose from intercooler.

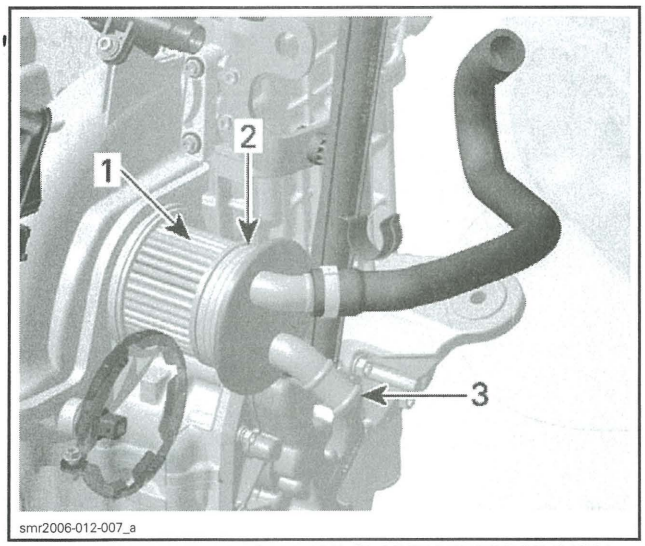

INTERCOOLER PULLED OUT FOR CLARITY PURPOSE ONLY
1. *Intercooler*
2. *Outlet hose*
3. *Inlet nipple*

Plug intercooler inlet nipple.

Install an adapter on the outlet hose to connect a pressure pump.

REQUIRED TOOL	
VACUUM/PRESSURE PUMP (P/N 529 021 800)	

Pressurize the intercooler as follows:

PRESSURE TEST
69 kPa (10 PSI) for 10 minutes minimum

If there is a pressure drop, first spray hoses and adapters with a soapy solution to ensure they are not leaking.

Otherwise, remove intercooler from manifold to spray soapy water on it. If air bubbles are present, replace the intercooler. Refer to procedures further in this subsection.

Properly reinstall removed parts.

Make sure the intercooler outlet hose is installed in the holding device (located on the oil filler tube) otherwise the hose will scuff on the engine block.

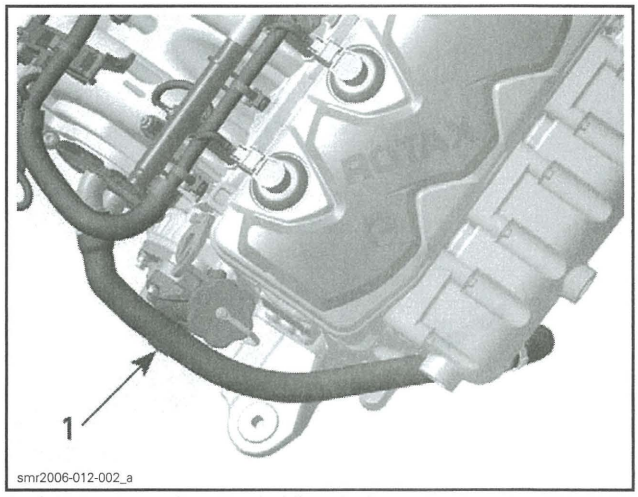

1. *Intercooler outlet hose holding device*

Intercooler Removal

Remove intake manifold. Refer to *INTAKE MANIFOLD* subsection.

Remove collar from intercooler.

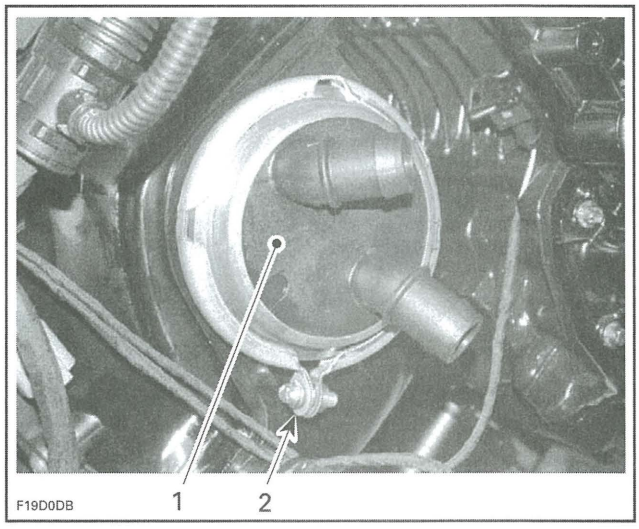

TYPICAL
1. *Intercooler*
2. *Collar*

Carefully pull intercooler out of intake manifold.

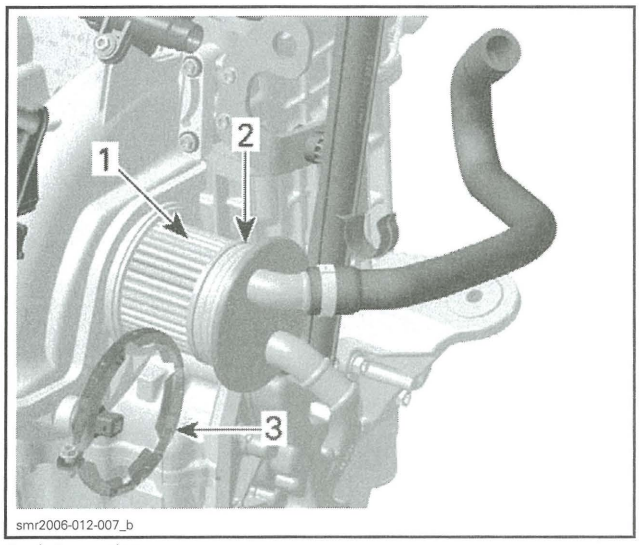

1. Intercooler
2. Profile ring
3. Collar

Intercooler Installation

Installation is essentially the reverse of removal procedures. However pay particular attention to the following.

Ensure profile rings are properly installed on intercooler and apply engine oil on them to ease installation.

While properly aligning the inner end of intercooler in intake manifold, gently push intercooler until it bottoms.

Align mark on intercooler with middle rib of the intake manifold.

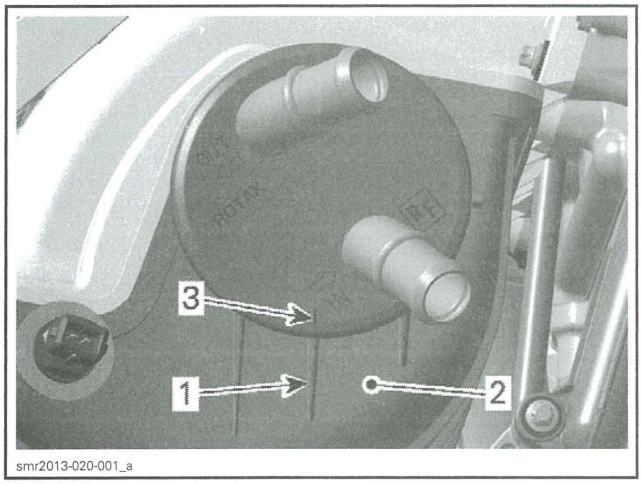

1. Middle rib
2. Intake manifold
3. Mark on intercooler

NOTE: If intercooler is hard to push in, a clamp can be used to press intercooler in.

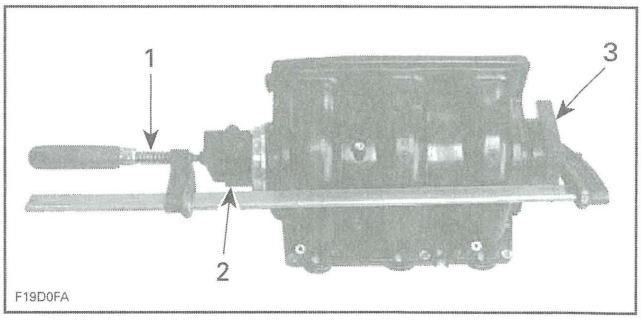

1. Clamp
2. Plastic block between nipples
3. Plastic block

Reinstall collar.

Align recess of collar with ribs on intake manifold.

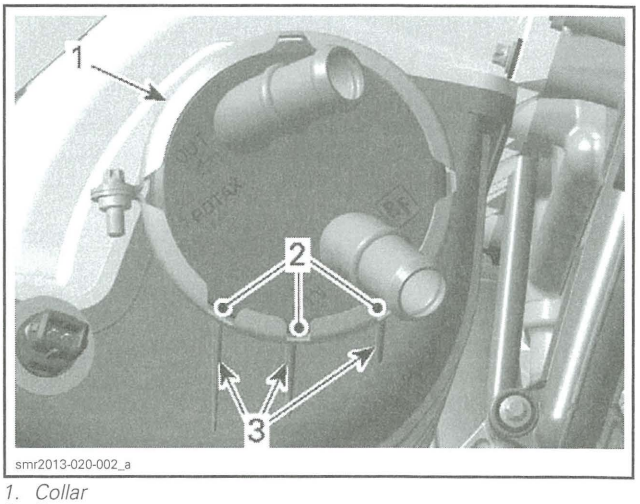

1. Collar
2. Recess
3. Ribs

Reinstall intake manifold.

INTERCOOLER (260 ENGINE)

SERVICE TOOLS

Description	Part Number	Page
LARGE HOSE PINCHER	529 032 500	30
VACUUM/PRESSURE PUMP	529 021 800	30

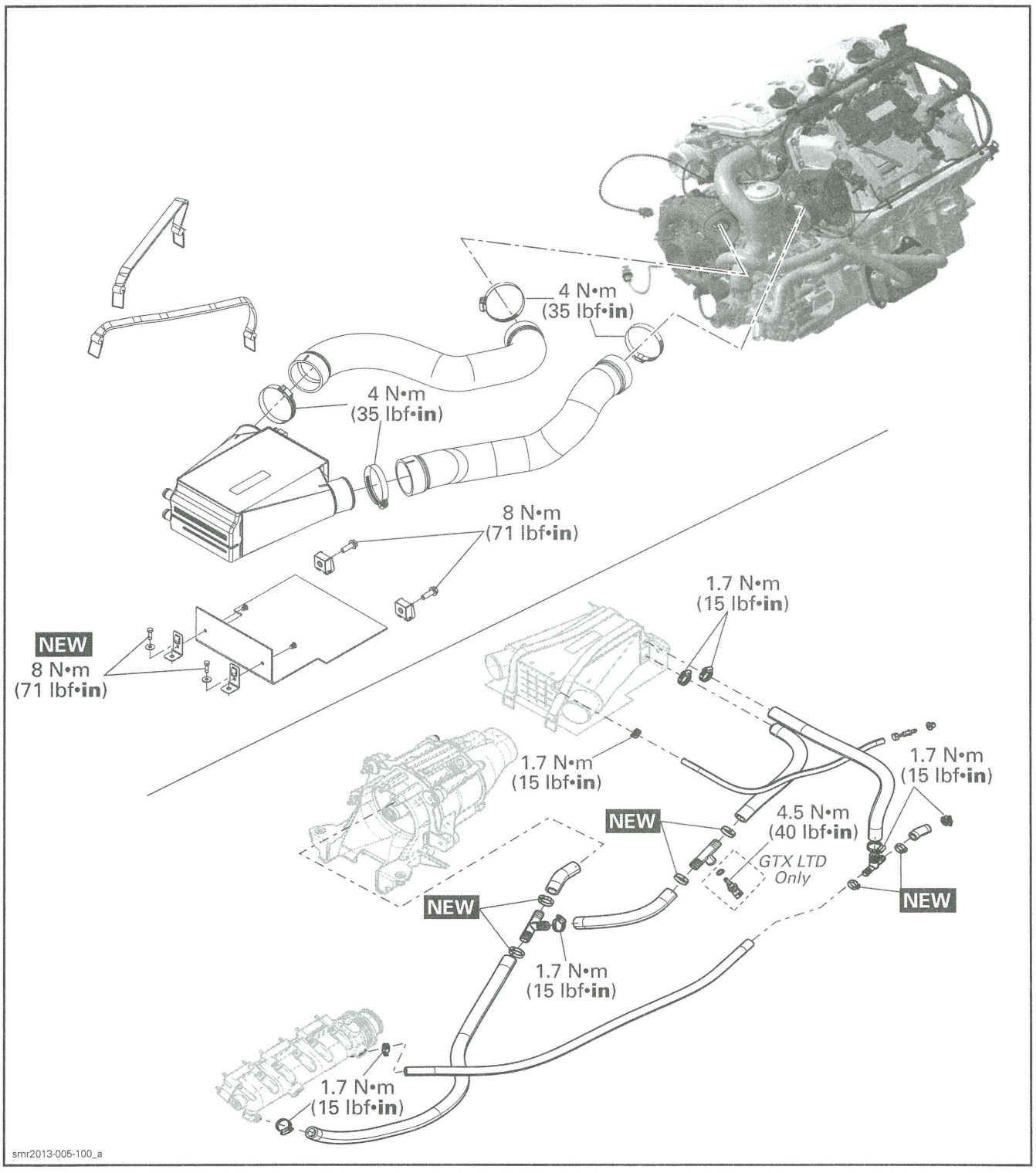
4 N•m
(35 lbf•in)
4 N•m
(35 lbf•in)
8 N•m
(71 lbf•in)
NEW
8 N•m
(71 lbf•in)
1.7 N•m
(15 lbf•in)
1.7 N•m
(15 lbf•in)
1.7 N•m
(15 lbf•in)
NEW
4.5 N•m
(40 lbf•in)
GTX LTD
Only
NEW
NEW
1.7 N•m
(15 lbf•in)
1.7 N•m
(15 lbf•in)
smr2013-005-100_a

MAINTENANCE

INTERCOOLER FLUSHING

Flushing the intercooler with fresh water is essential to neutralize corroding effects of salt or other chemical products present in water. It will help to clean up sand, salt, shells or other particles in intercooler.

NOTE: Intercooler is flushed with the exhaust system, as they are on the same circuit.

Exhaust system and intercooler should be flushed each time:

- Watercraft is used in salt water and is not expected to be used further the same day.
- Watercraft is used in foul water.
- Watercraft is stored for any extended time.

Refer to *EXHAUST SYSTEM* subsection for flushing procedure.

NOTICE Failure to flush the system, when necessary, will severely damage engine intercooler and/or exhaust system.

PROCEDURES

INTERCOOLER

⚠ WARNING

Let engine cool down prior to work on or near intercooler.

Intercooler Cleaning

If temperature in intake manifold is too high or if engine is down in performance, intercooler may require to be cleaned.

The exhaust system should be flushed first, as it may unclogged the intercooler. If not, then proceed with the intercooler cleaning procedure as detailed here.

NOTE: The exhaust temperature will decrease when the intercooler is clogged because more water is rerouted through the exhaust system.

To clean the intercooler, do the following:

NOTICE Never try to clean the intercooler with chemical products. Only use fresh water. Chemical products will permanently damage the internal parts of intercooler.

1. Remove the intercooler from the watercraft. See procedure further in this subsection.
2. Pour fresh water into the water outlet fitting.

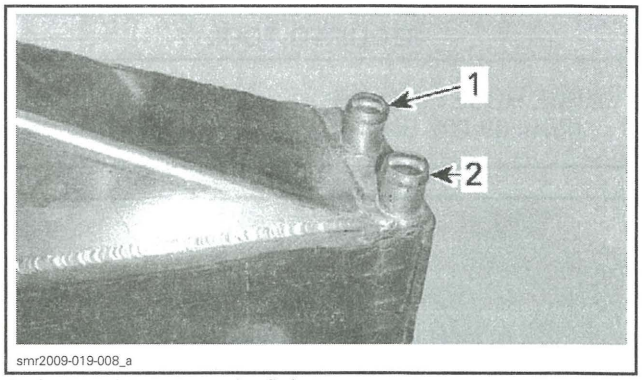

1. *Intercooler water outlet fitting*
2. *Intercooler water inlet fitting*

3. Let water soak in intercooler for a couple of hours. Occasionally, shake the intercooler to soak off deposits.
4. Rinse the intercooler using a garden hose installed on water outlet.
5. Let water flow out of intercooler a few minutes to evacuate internal deposits.
6. Check water flow.

WATER FLOW	
LOW OR ERRATIC	1. Repeat cleaning procedure.
	2. Replace the intercooler.
HIGH AND REGULAR	Intercooler is not clogged.

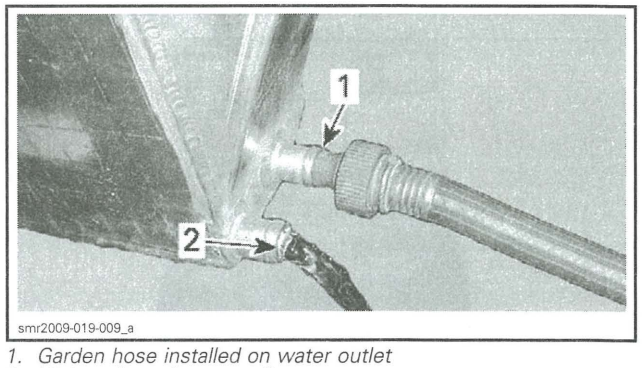

1. *Garden hose installed on water outlet*
2. *High and regular water flow*

7. Perform a leak test before installing the intercooler in the watercraft.

Intercooler Leak Test

Block intercooler water outlet hose.

REQUIRED TOOL	
LARGE HOSE PINCHER (P/N 529 032 500)	

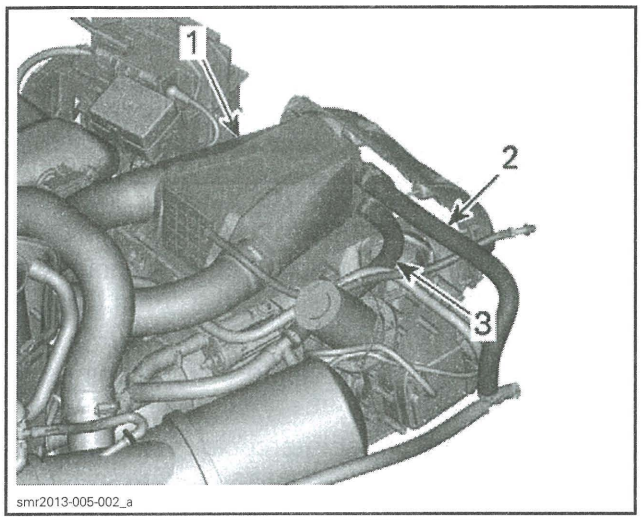

MANY PARTS REMOVED FOR CLARITY PURPOSE
1. *Intercooler*
2. *Intercooler water outlet hose*
3. *Intercooler water inlet hose*

Unplug the intercooler water inlet hose from the intercooler.

Install the VACUUM/PRESSURE PUMP (P/N 529 021 800) on intercooler water inlet fitting.

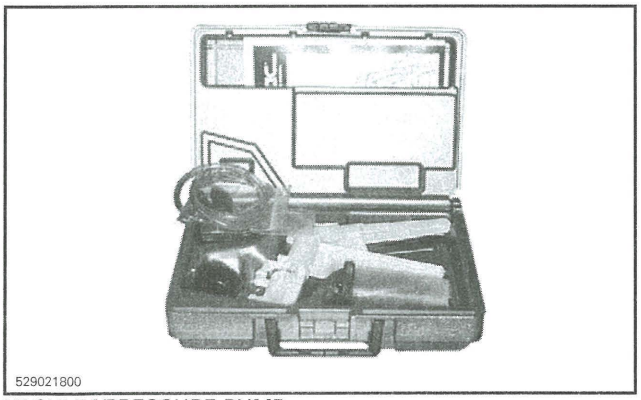

VACUUM/PRESSURE PUMP

Pressurize the intercooler.

PRESSURE TEST
69 kPa (10 PSI) for 10 minutes minimum

If there is a pressure drop, first spray tool, hoses and adapters with a soapy water solution to ensure they are not leaking. If they are not leaking, replace the intercooler.

Intercooler Access

RXT and GTX with Suspension

Open the boarding platform and remove both storage baskets.

RXT Without Suspension

Open the seat and remove both rear access panels.

RXP-X Series

Remove the seat and the rear handle.

Detach exhaust hose from muffler.

Intercooler Removal

Disconnect the intercooler water hoses.

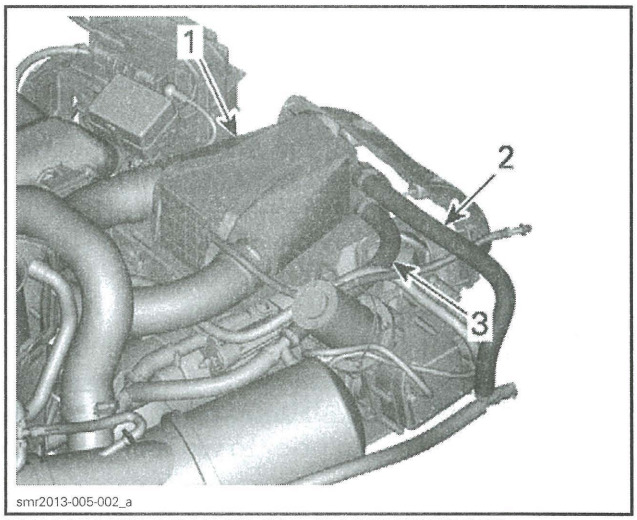

MANY PARTS REMOVED FOR CLARITY PURPOSE
1. *Intercooler*
2. *Intercooler water outlet hose*
3. *Intercooler water inlet hose*

Disconnect both air hoses.

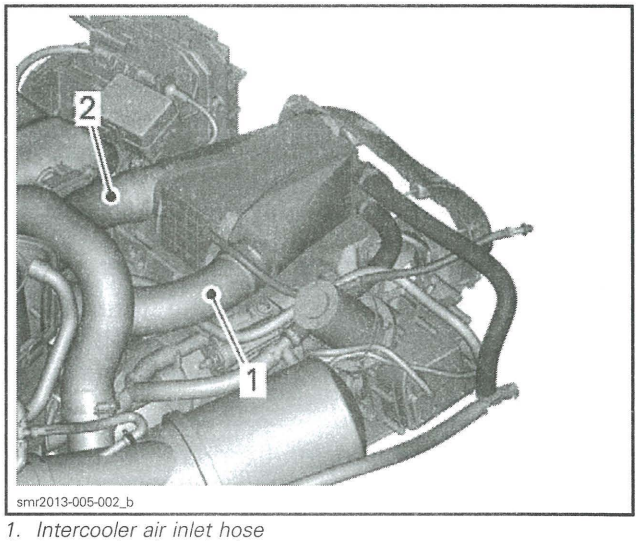

1. *Intercooler air inlet hose*
2. *Intercooler air outlet hose*

Disconnect vent hose.

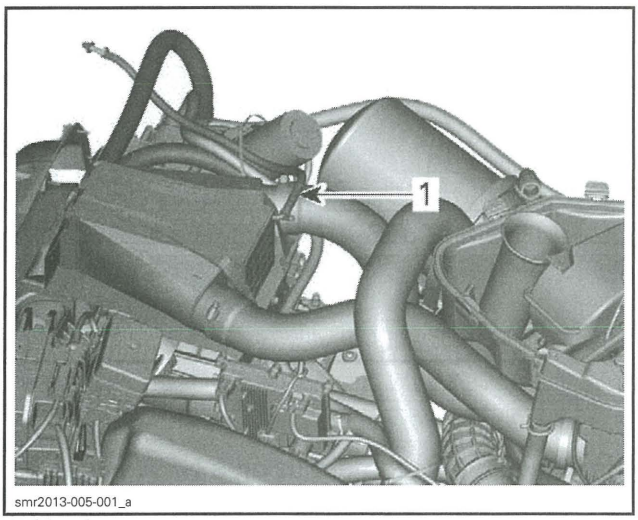

1. *Vent hose*

Detach both intercooler straps.

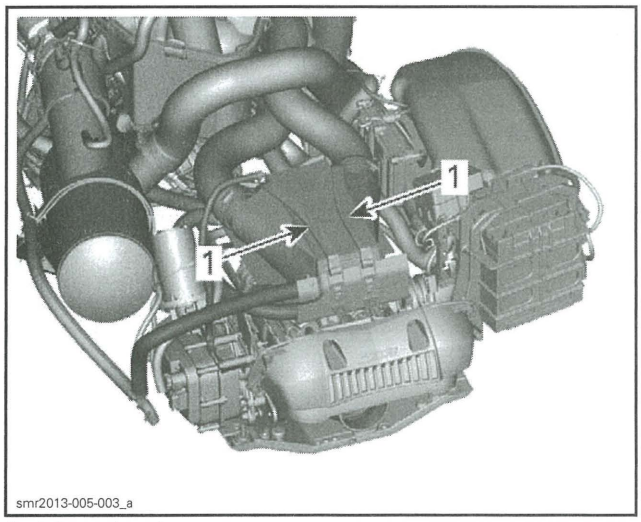

1. *Intercooler straps*

RXP Model

Pull intercooler out of vehicle.

All Models Except RXP

Remove the iBR actuator. Refer to *iBR AND VTS* subsection.

Remove the intercooler from vehicle by the LH opening.

Intercooler Installation

The installation is the reverse of the removal procedure.

NOTE: Ensure hoses are routed correctly and locking ties are positioned at proper locations.

INTERCOOLER ATTACHMENTS

Front Attachment Replacement

Remove the *INTERCOOLER*, see procedure in this subsection.

iS Models

Detach iS module from its support and move the module aside to make room.

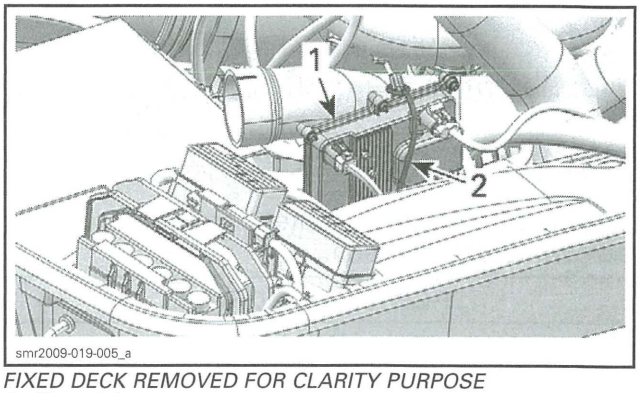

FIXED DECK REMOVED FOR CLARITY PURPOSE
1. *iS module*
2. *Retaining latch*

Cut locking ties securing wiring harnesses to iS module support and front attachment.

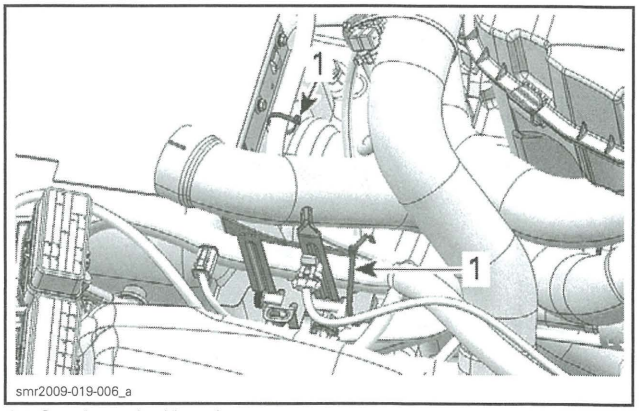

1. *Cut these locking ties*

All Models

Cut locking ties securing the iBR harness.

Remove screw retaining the intercooler attachment.

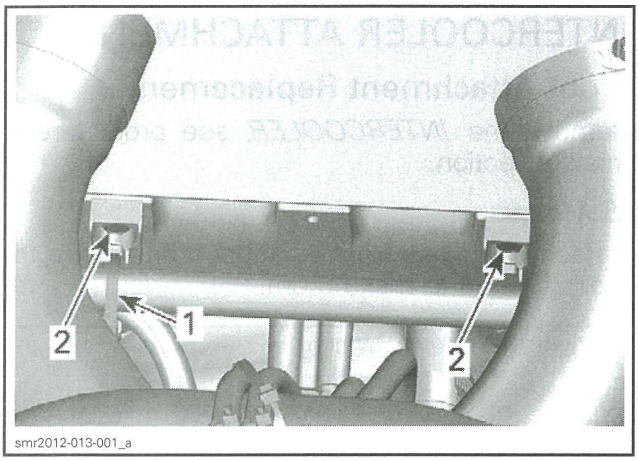

1. Locking tie retaining the iBR harness
2. Intercooler attachment retaining screw

When reinstalling, tighten front attachment screws to specification.

TIGHTENING TORQUE	
Front attachment screw	8 N•m (71 lbf•**in**)

Install all other removed parts.

Rear Attachment Replacement

Remove the intercooler, see procedure in this subsection.

Remove darts and rubber pad.

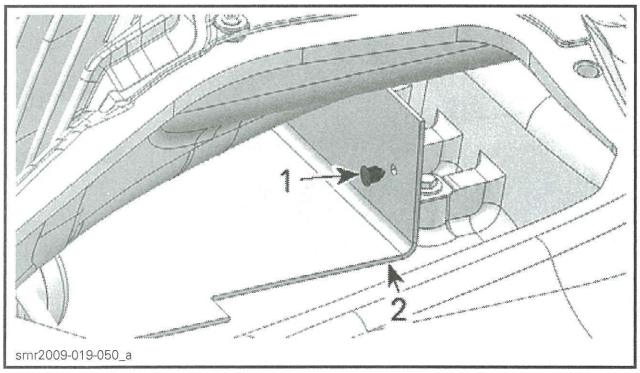

THROUGH THE LH REAR OPENING
1. Dart
2. Rubber pad

Remove and discard screw securing the attachment to the hull.

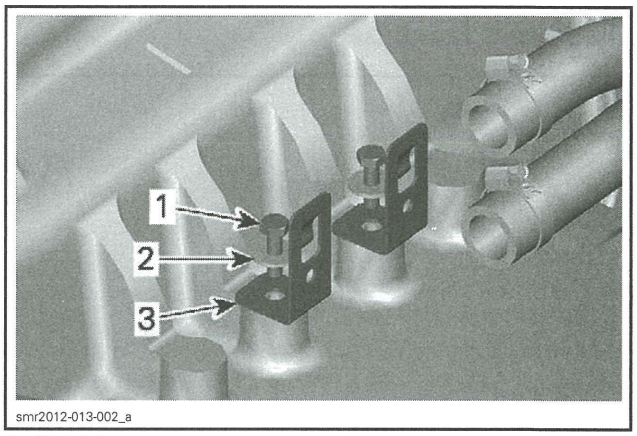

1. Retaining screw
2. Washer
3. LH rear attachment

Install a new attachment using a NEW screw.

Tighten rear attachment screw to specification.

TIGHTENING TORQUE	
Rear attachment screw	8 N•m (71 lbf•**in**)

Install all other removed parts.

COMMUNICATION TOOLS AND B.U.D.S.

SERVICE TOOLS

Description	Part Number	Page
MPI-2 DIAGNOSTIC CABLE	710 000 851	35
MPI-2 INTERFACE CARD	529 036 018	35–36

SERVICE TOOLS – OTHER SUPPLIER

Description	Part Number	Page
MALE-FEMALE EXTENSION SERIAL CABLE	DB9	36

GENERAL

Refer to *PROCEDURES* for instructions on the communication tools.

If communication problems occur, refer to *TROUBLESHOOTING* in this subsection.

TROUBLESHOOTING

DIAGNOSTIC TIPS

IMPORTANT: Make sure all connections are made and vehicle is powered up **before starting B.U.D.S.** to allow proper communication between the vehicle and B.U.D.S. software.

MPI-2 Connection Troubleshooting

MPI-2 Status Lights

The MPI-2 includes 2 status lights that indicate the connection condition: USB and CAN. **Both lights must be GREEN** for the MPI-2 to function properly. Otherwise, refer to the following charts.

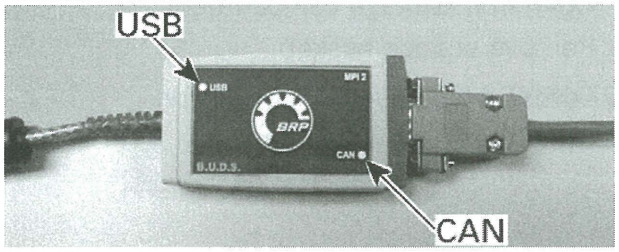

vdd2006-001-151_b

Prerequisite for USB communication:
- PC Computer turned on
- MPI-2 connected to PC computer.

USB LIGHT	
STATUS	WHAT TO DO
Light is OFF	– Check USB connection between MPI-2 and PC computer. – Check USB operation on PC computer (hardware or Windows drivers).
Light is GREEN	– Connections are GOOD. Communication can take place on USB side.

Prerequisite for CAN communication:
- MPI-2 connected to diagnostic connector on vehicle.
- ECM turned on (press the START button).
- Tether cord installed on the vehicle engine cut-off switch.
- B.U.D.S. started and logged on.

CAN LIGHT	
STATUS	WHAT TO DO
Light is OFF	Check connection between MPI-2 and diagnostic connector on vehicle.
Light is RED	Check CAN wires/connectors on vehicle.
Light is GREEN	Connections are GOOD. Communication can take place on CAN side.

Communication Problems when Using B.U.D.S.

Missing Module

If one or more ECU is not communicating with the MPI, refer to *DIAGNOSTIC AND FAULT CODES* subsection.

No Vehicle Detected

If an "X" is shown in the status bar and the protocol tool is blinking between Kw2000 500K and Kw2000, it means that no ECU is communicating with the MPI.

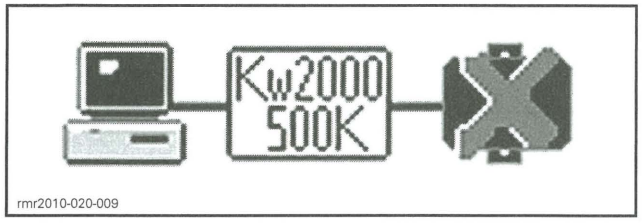

rmr2010-020-009

1. Check connections between the PC computer and the vehicle.
2. Ensure the electrical system is powered up.

NOTE: The **tether cord** must be installed.

3. Ensure both USB and CAN lights on the MPI-2 are GREEN. Refer to *MPI-2 CONNECTION TROUBLESHOOTING* subsection.

If B.U.D.S. does not automatically exit the following message box, click the **Try active detection mode** button. This will manually establish the communication with the ECUs.

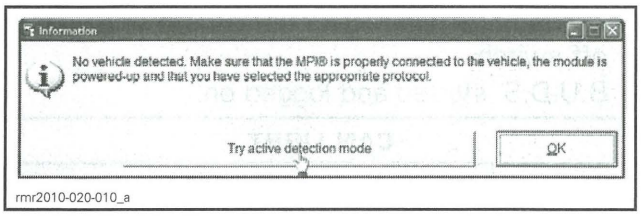

rmr2010-020-010_a

Message Box: "Some of the Information Normally Displayed..."

If the following message box is displayed in B.U.D.S.:

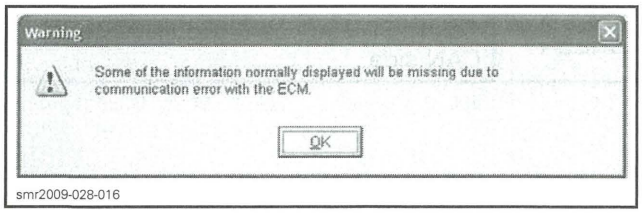

smr2009-028-016

1. Click on the **OK** button in the box.
2. Ensure the tether cord is properly installed.
3. **Briefly** press the vehicle START button to activate the ECM. **Do not hold START button to avoid engine starting.**
4. Click on the **Read Data** button in B.U.D.S.

Message Box: "Engine must be Stopped..."

If the following message box is displayed in B.U.D.S.:

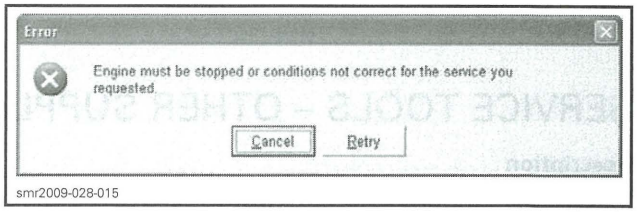

smr2009-028-015

1. Click on the **Cancel** button in B.U.D.S.
2. Ensure the tether cord is properly installed.
3. **Briefly** press the vehicle START button to activate the ECM. **Do not hold START button to avoid engine starting.**
4. Continue with the procedure undertaken prior to the appearance of the message box.

PROCEDURES

MPI-2

The MPI-2 (Multi-Purpose Interface-2) in conjunction with the MPI-2 diagnostic cable is used with B.U.D.S. software to communicate with the ECM (engine control module) and other modules.

MPI-2 Power

The MPI-2 interface card uses the power from the PC computer USB port.

Connecting the PC to the Vehicle

GTS, GTI, GTR, RXP-X Series and Wake

1. Open front storage compartment.
2. Remove storage basket.

GTX/RXT Models with Suspension

3. Open the boarding platform.

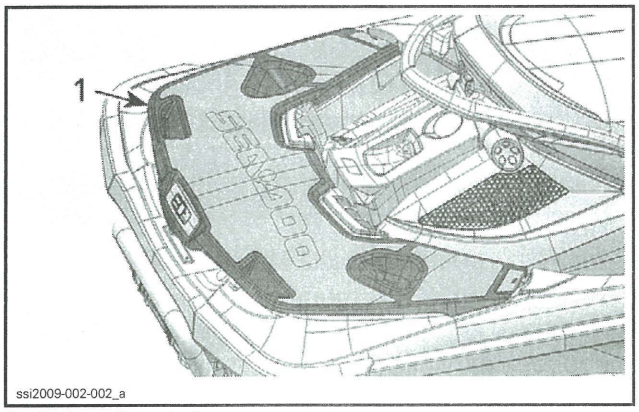

1. Re-boarding platform

4. Remove the RH storage bin.

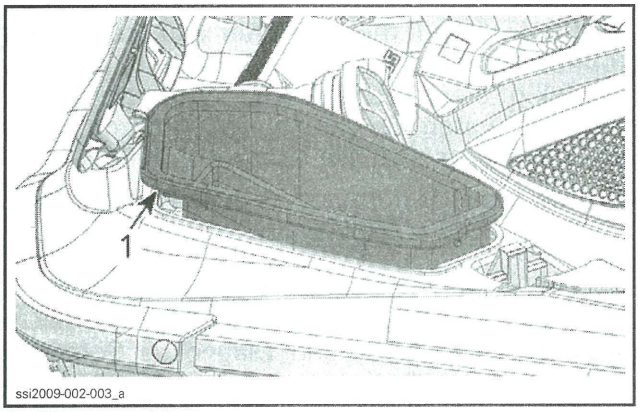

1. RH storage bin

GTX/RXT Models Without Suspension

5. Remove the RH access panel on the boarding platform.

All Models

6. Disconnect the 6-pin diagnostic connector from its holder (protective cap).

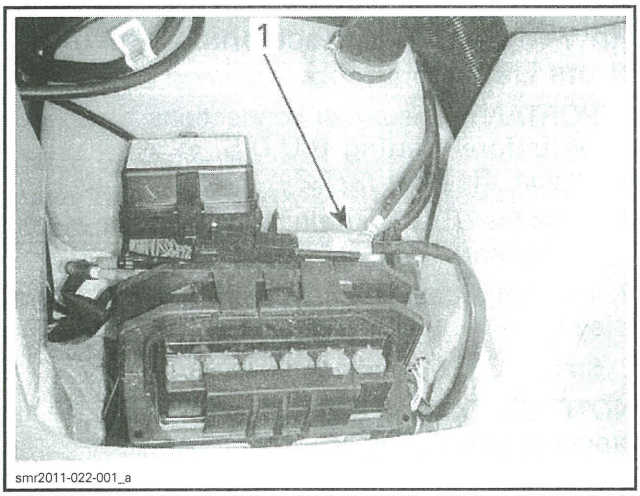

TYPICAL — ACCESS FROM FRONT STORAGE COMPARTMENT
1. Diagnostic connector

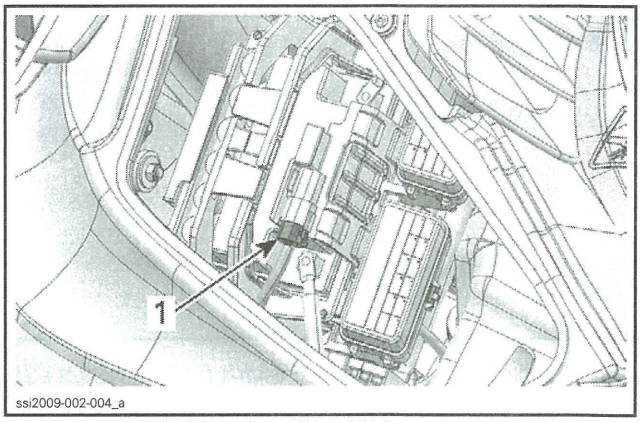

TYPICAL — ACCESS FROM REAR RH PANEL
1. Diagnostic connector

7. Connect one end of the MPI-2 DIAGNOSTIC CABLE (P/N 710 000 851) to vehicle connector.

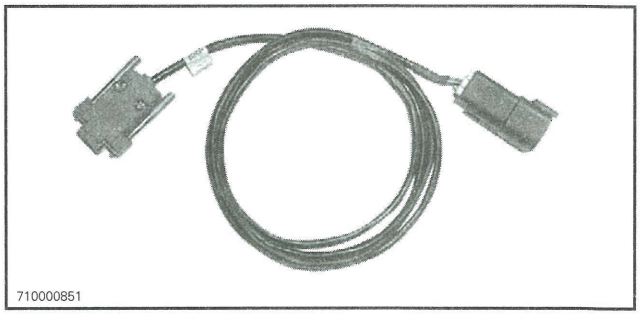

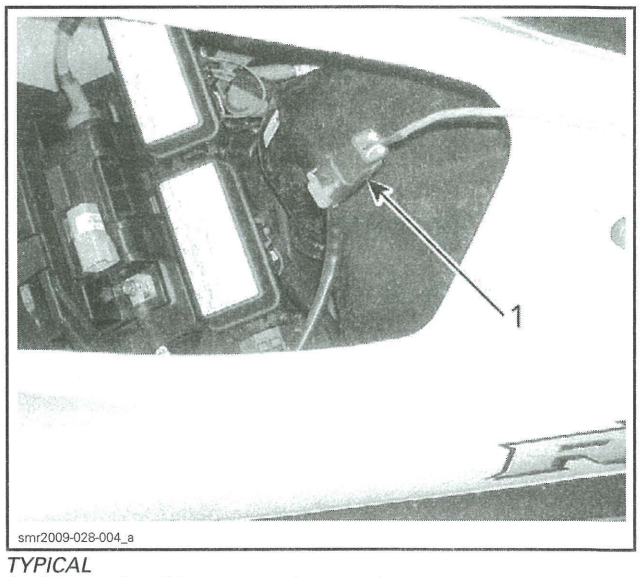

TYPICAL
1. Diagnostic cable connected to vehicle

8. Connect the other end of diagnostic cable to the MPI-2 INTERFACE CARD (P/N 529 036 018).

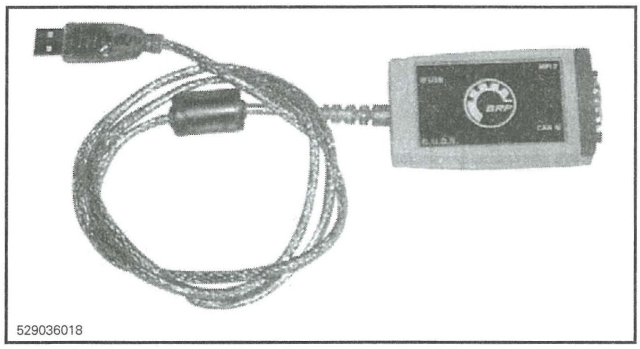

NOTE: An optional MALE-FEMALE EXTENSION SERIAL CABLE (P/N DB9) available at electronic retail outlets can be used between diagnostic cable and MPI-2 interface. Do not exceed 7.6 m (25 ft).

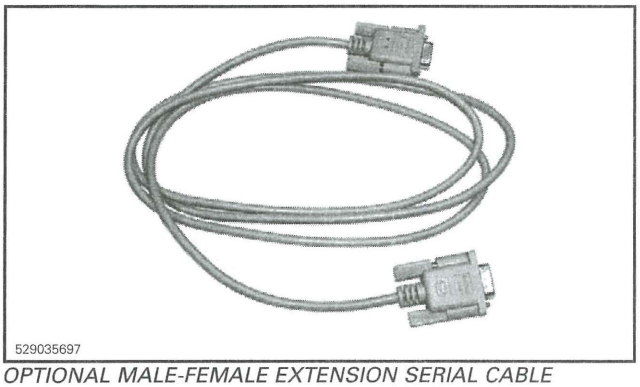

OPTIONAL MALE-FEMALE EXTENSION SERIAL CABLE

9. Connect the MPI-2 INTERFACE CARD (P/N 529 036 018) to the USB port of a PC (personal computer).

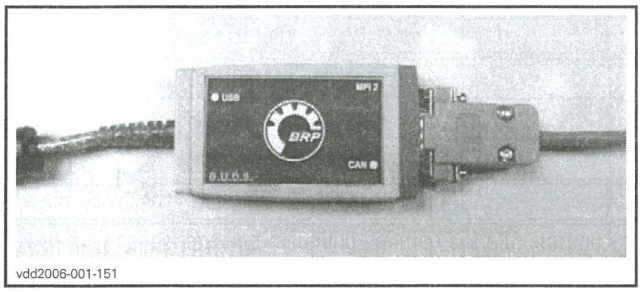

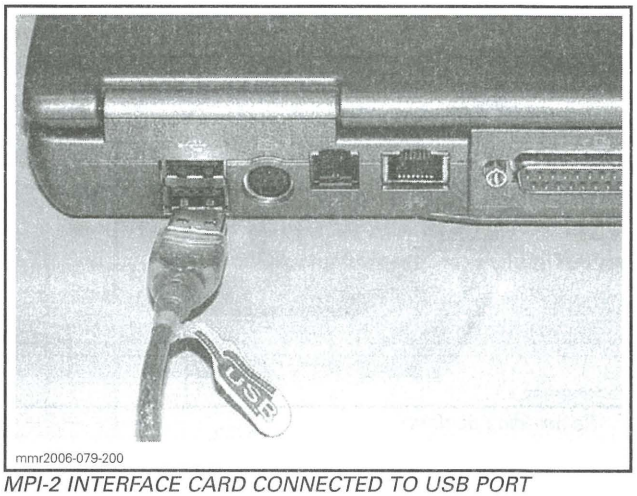

MPI-2 INTERFACE CARD CONNECTED TO USB PORT

⚠ CAUTION If the computer you are using is connected to a power outlet, there is a potential risk of electric shock when working in contact with water. Be careful not to touch water while working with the computer.

10. Use B.U.D.S. software as described further in *B.U.D.S. SOFTWARE*.

B.U.D.S. SOFTWARE

B.U.D.S. (BRP Utility and Diagnostic Software) is designed to allow programming key(s) to the vehicle, allow electrical and electronic component monitoring, activation of certain components for diagnostic purposes, and to carry out settings changes.

For more information pertaining to the use of the B.U.D.S. software, use its help which contains detailed information on its functions.

Always use the latest applicable B.U.D.S. version available on BOSSWeb.

How to Read the Electronic Control Units Using B.U.D.S. Software

IMPORTANT: Ensure all connections have been made **before starting B.U.D.S.** to allow proper operation. Refer to *MPI-2* in this subsection.

1. Press the START button to wake up the electrical system.
2. Install the tether cord on the engine cut-off switch.
3. Start B.U.D.S. and logon.

NOTE: B.U.D.S. will automatically choose the appropriate MPI 2 protocol.

4. Ensure the appropriate number of modules is shown in the status bar.

MODEL	NUMBER OF MODULES	MODULES
GTS	2	ECM and cluster
GTI, GTR, RXP-X and WAKE	3	ECM, cluster and iBR
GTX/RXT models with iS	4	ECM, cluster, iBR and iS
GTX/RXT models without suspension	3	ECM, cluster and iBR

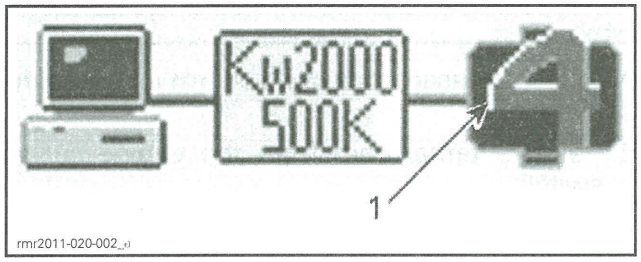

1. Number of modules

5. Read electronic modules by clicking the **Read Data** button.

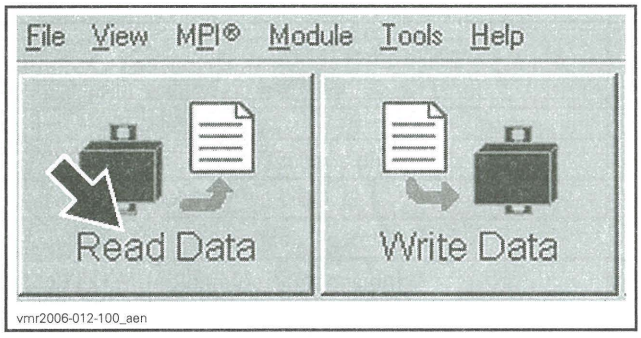

B.U.D.S. is now ready to use.

Electronic Modules ECU Update

NOTICE **Failure to strictly follow a procedure to update a module may permanently damage the module.**

Whenever B.U.D.S. is started, check for an update icon in the B.U.D.S. status bar.

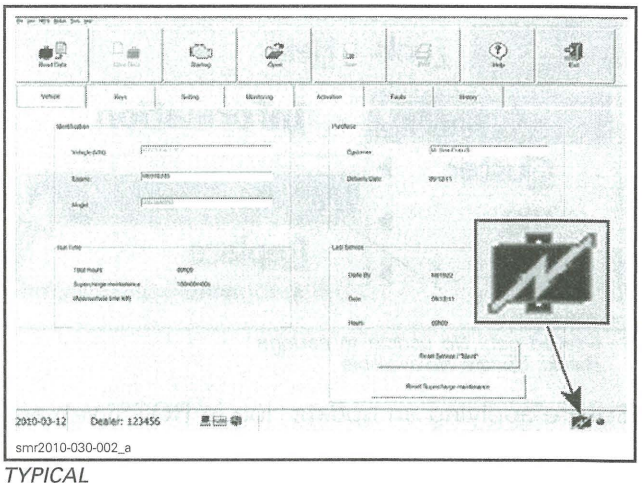

TYPICAL

If the icon is visible, it indicates that a file is available in B.U.D.S. to update at least one of the electronic modules.

NOTE: If an update file is available on BOSSWeb but the B.U.D.S. software being used is not up to date, the update icon will not appear. Refer to the service bulletins to see if there is an update available.

Use the **Module** submenu and check all modules one at a time to see which module(s) can be updated.

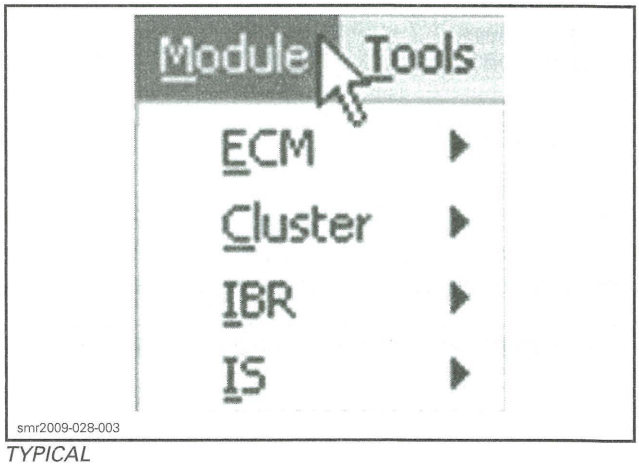

TYPICAL

1. If the **Update** option is **greyed out**, no update file is available for this module.
2. If the **Update** option is **black**, an update file is available for this module.

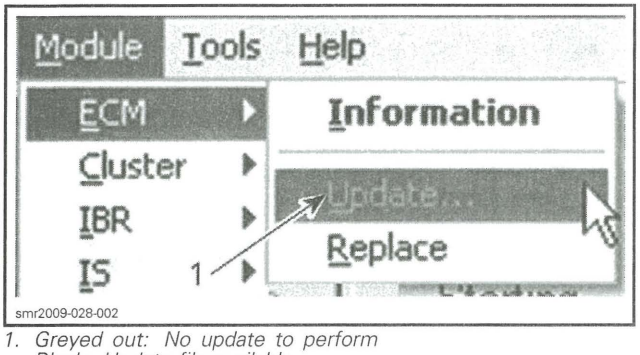

1. Greyed out: No update to perform
Black: Update file available

Before applying an update, log in BOSSWeb and look in **Service** for the **Unit history** to find out if any information or publication related to the vehicle is available. If so, carefully follow the given instructions.

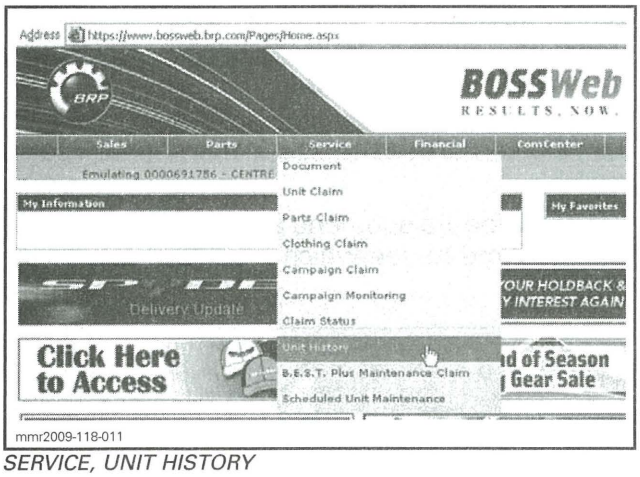

SERVICE, UNIT HISTORY

NOTE: When selecting the update menu in B.U.D.S., a dialog box will appear and the update file description may give some clue to finding the vehicle-related information in BOSSWeb.

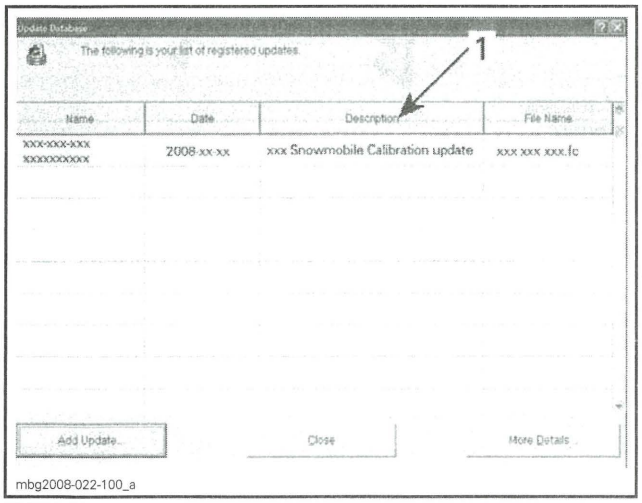

TYPICAL
1. File description

Writing Changes in an ECU

1. When finished, save changes to the related electronic module by clicking the **Write Data** button.

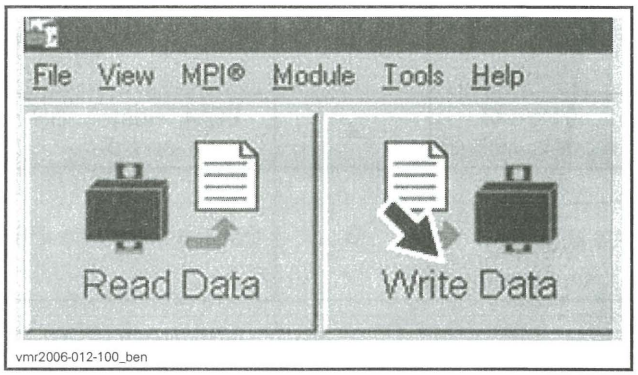

NOTE: A message box will confirm a successful operation.

2. Remove tether cord from the engine cut-off switch.

Disconnect MPI connections and secure the vehicle diagnostic connector in its holder.

NOTE: Holder has a 120 ohm internal resistor. Diagnositic connector must be secured in holder for proper operation.

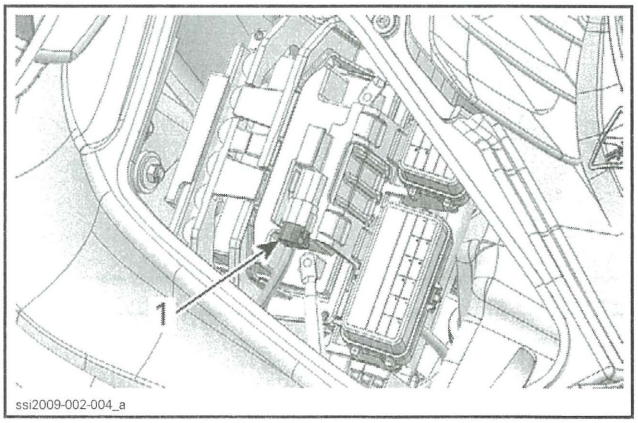

TYPICAL
1. Diagnostic connector secured to holder

NOTICE **Failure to secure the diagnostic connector in its protective cap may result in corrosion or other damage to the terminals.**

3. Reinstall al removed parts, refer to appropriate subsections.

DIAGNOSTIC AND FAULT CODES

GENERAL

MONITORING SYSTEM

This system monitors the electronic components of the EMS (engine management system), iBR, information center, iS and other components of the electrical system to detect if they are faulty or defective. The monitoring system becomes active when the START button is pressed.

NOTE: Some components need the engine to be running to be monitored (fuel injectors for example).

The following components or functions are monitored.

EMS MONITORING
Battery voltage
EMS sensors (TAS, TPS, CPS, CAPS, MAPS, MATS, CTS, OPS, EGTS, TOPS, knock sensor). Throttle actuator, ignition coils and fuel injectors
ECM
Engine RPM
CAN
D.E.S.S. system
START switch and starter solenoid
Fuel pump
O.T.A.S.
Information center
iBR module

iBR MONITORING
iBR module and motor
BRLS
Engine RPM
Vehicle speed
iBR gate position
CAN
Lake temperature sensor
Information center
ECM

INFORMATION CENTER MONITORING
Information center
VTS, Sport and ECO switch
MODE and SET switch
Cruise switch
CAN
GPS
Fuel level sensor
Depth sounder
ECM
iBR module
iS module

iS MONITORING
iS module and motor
Vehicle speed
Suspension position
CAN
TOPS
Information center
iBR module

When a malfunction is currently detected, the related electronic module:

- Sets an active fault code.
- Adapts the proper protection strategy according to the failure.
- Sends out warning signals to the information center/beeper codes to inform the rider of a particular condition.

When a minor or transient fault occurs, the fault message and beeper will cease automatically if the condition that caused the fault does not exist anymore.

If a minor fault is active, the engine will operate without a noticeable loss of performance.

Releasing the throttle and letting the engine return to idle speed may allow normal operation to resume. If this does not work, try the following:

- Remove tether cord from the engine cut-off switch.
- Wait 3 minutes to allow the ECM to shut down.
- Start engine.
- Check if the fault code is still active.

The electronic system will react differently depending on the fault type. If a severe failure occurs, the engine may not be allowed to be started. In other cases, the engine may operate in limp home mode (reduced speed) or not be affected at all.

These strategies are used to protect the engine system from damage and to maintain safe operation of the vehicle.

Limp Home Mode

When a major component of the EMS or the iBR is not operating properly, limp home mode will be set. Engine speed will be limited and therefore vehicle speed.

This mode allows the rider to return home which would otherwise not be possible without this advanced system.

When this mode is active, LIMP HOME MODE will be displayed in the information center.

Major Fault and Vehicle Reaction

The following EMS conditions will trigger a limp home mode.

ENGINE PROBLEM	MAX ALLOWED RPM
High engine temperature (from 110°C (230°F))	3000
High exhaust temperature (from 110°C (230°F))	3000
Low oil pressure (below 180 - 220 kPa (26 - 32 PSI))	2500

The following conditions will trigger limp home mode.

iBR PROBLEM	SYSTEM BEHAVIOR
Any active fault code related to the iBR that prevents its proper operation	iBR gate will be moved and locked in forward position (if possible)
	Engine will be set in limp home mode (reduced speed)

The following conditions will stop the suspension.

iS PROBLEM	SYSTEM BEHAVIOR
Any active fault code related to the iS that prevents its proper operation	Suspension operation will be disabled
	It will remain at the position it was at when the fault code was set

Indicator Lights and Message Display Information

The fault indicators and messages displayed in the information center will inform you of a particular condition or if an anomaly occurs.

GTI/GTR/GTS Series and Wake

FAULT INDICATOR (ON)	MESSAGE DISPLAY	DESCRIPTION
	HIGH TEMPERATURE	Engine or exhaust system overheating
	CHECK ENGINE or LIMP HOME MODE	Check engine (minor fault req. maint.) or iBR system fault or LIMP HOME MODE (major eng. fault)
	LOW or HIGH BATTERY VOLTAGE	Low/high battery voltage
	LOW OIL PRESSURE	Low engine oil pressure detected
	iBR MODULE ERROR	iBR system fault

RXT/GTX/RXP Series and Wake Pro

PILOT LAMPS (ON)	MESSAGE DISPLAY	DESCRIPTION
	LOW or HIGH BATTERY VOLTAGE	Low/high battery voltage
	HIGH TEMPERATURE	Engine or exhaust system overheating
	CHECK ENGINE or LIMP HOME MODE	Check engine (minor fault req. maint.) or LIMP HOME MODE (major eng. fault)
	LOW OIL PRESSURE	Low oil pressure
	_	iBR system fault
	_	OTAS system fault

FAULT MESSAGES	
RIGHT KEYPAD ERROR	Gauge control button malfunction
LOW OIL PRESSURE	Engine low oil pressure detected
HIGH EXHAUST TEMPERATURE	High exhaust temperature detected
HIGH TEMPERATURE	High engine temperature detected
CHECK ENGINE	Engine management system malfunction or maintenance required
HIGH BATTERY VOLTAGE	High battery voltage detected
LOW BATTERY VOLTAGE	Low battery voltage detected
LIMP HOME MODE	Major fault detected, engine power limited
FUEL SENSOR DEFECTIVE	Fuel level sensor fault
WATER TEMP SENSOR DEFECTIVE	Problem in iBR, not sending water temperature info
CALIBRATION CHECKSUM ERROR	Information center programming corrupted
MAINTENANCE REQUIRED	Watercraft maintenance required
DEPTH SOUNDER MODULE COMMUNICATION PROBLEM	Error message if depth sounder is disconnected while riding
IS MODULE COMMUNICATION PROBLEM	Error message if communication with the suspension module is lost while riding
iBR MODULE ERROR	Error message if communication with the iBR module is lost while riding
FUNCTION CANNOT BE ACTIVATED	Message when a function is not or cannot be properly activated
WRONG KEY	Key not programmed for this watercraft
O.T.A.S. MAINTENANCE REQUIRED	Maintenance on O.T.A.S. required

Beeper Signals

When one of the below conditions occurs, the monitoring system emits the following beep signals.

BEEPER CODES	DESCRIPTION
A 1 second beep every 5 second interval (while installing D.E.S.S. key on engine cut-off switch if ECM is on)	**Bad D.E.S.S. system connection.** Reinstall tether cord correctly over engine cut-off switch.
	Wrong D.E.S.S. key. Use a tether cord with a D.E.S.S. key that has been programmed for the watercraft.
	Defective D.E.S.S. key. Use another programmed D.E.S.S. key.
	Dried salt water in D.E.S.S. key. Clean D.E.S.S. key with fresh water to remove salt water.
	Defective engine cut-off switch. Check. Refer to *IGNITION SYSTEM* subsection.
	Improper operation of ECM or defective wiring harness. Check. Refer to *ELECTRONIC FUEL INJECTION (EFI)* subsection.
A 2 second beep every 5 minute interval	**Low fuel level.** Refill fuel tank. If problem persists, check sensor and circuit. Refer to *FUEL TANK AND FUEL PUMP* subsection.
	Fuel tank level sensor or circuit malfunction. Check sensor and circuit. Refer to *FUEL TANK AND FUEL PUMP* subsection.
Continuously beeps	**High engine coolant temperature.** Refer to *COOLING SYSTEM* subsection.
	High exhaust temperature. Refer to *ELECTRONIC FUEL INJECTION (EFI)* subsection.
	Low oil pressure. Turn off engine as soon as possible. Check oil level and refill. Refer to *LUBRICATION* subsection.

FAULT CODES

A fault code is an indication that a malfunction is detected by the monitoring system of the vehicle.

Fault Code Categories

A fault code consists of an alphanumeric designator followed by a hexadecimal number of 3 digits. The alphanumeric designator defines the category of the fault code while the hexadecimal number refers to a unique fault.

FAULT CODE CATEGORIES		
ALPHANUMERIC DESIGNATOR	MODULE/ SYSTEM	EXAMPLE OF FAULT CODE
From B0 to B3	Body (include information center and switch faults)	B2211
From C0 to C3	iBR and iS	C007B
From P0 to P3	Power train and related system faults (includes ECM)	P062F
From U0 to U3	Communication between modules and sensors	U0179

RELATED MODULE AND FAULTS	
MODULE	FAULT CODE CATEGORY
ECM (engine control module)	Stores mainly "P" codes and some "U" codes
iBR (intelligent brake and reverse)	Stores mainly "C" codes and a few "U" codes
iS (intelligent suspension)	Stores mainly "C" codes and a few "U" codes
Cluster	Stores mainly "C" codes and a few "U" codes

Reading Fault Codes Using the Information Center

NOTE: A fault code must have the "Active" state to be displayed in the multifunction gauge.

1. Press the MODE button repeatedly until the FAULT CODE function is visible in the multifunction display.
2. Press the SET button or the UP or DOWN arrow button to enter the function and display the first fault code.
3. Press the UP or DOWN arrow button repeatedly to display each subsequent code.

NOTE: When the last fault code has been displayed and the button is pressed again, the system loops back to the first fault code displayed, and all fault codes can again be displayed. If there was one active fault code when entering FAULT CODE mode, and it becomes occurred (no longer active), a NO ACTIVE FAULT CODE message will scroll in the display.

4. To exit the FAULT CODE display function, the MODE or SET button must be pressed once. There is no time-out on this function.

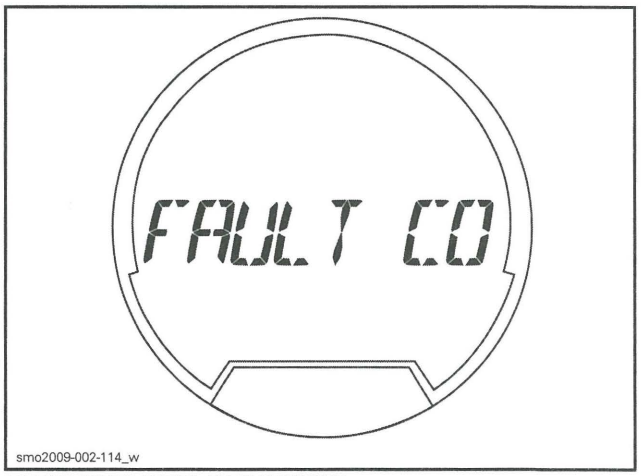

FAULT CODE DISPLAY FUNCTION

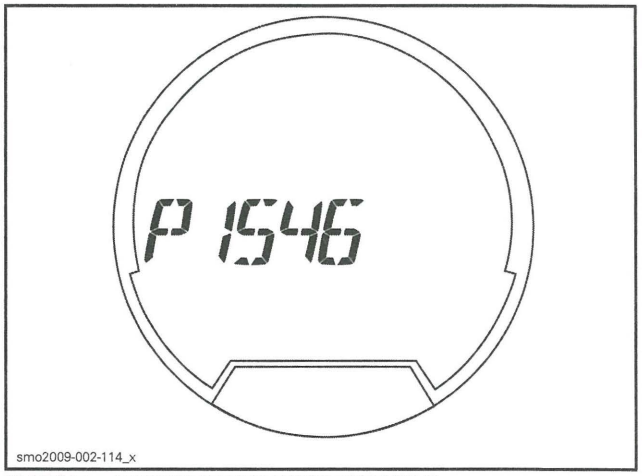

TYPICAL - ENGINE FAULT CODE EXAMPLE

Reading Fault Codes Using B.U.D.S. Software

NOTE: All fault code types can be read with B.U.D.S.

1. Connect vehicle to the latest applicable B.U.D.S. software. Refer to *COMMUNICATION TOOLS AND B.U.D.S.* subsection.

2. Click on the **Read Data** button.
3. Click on the **Faults** tab.

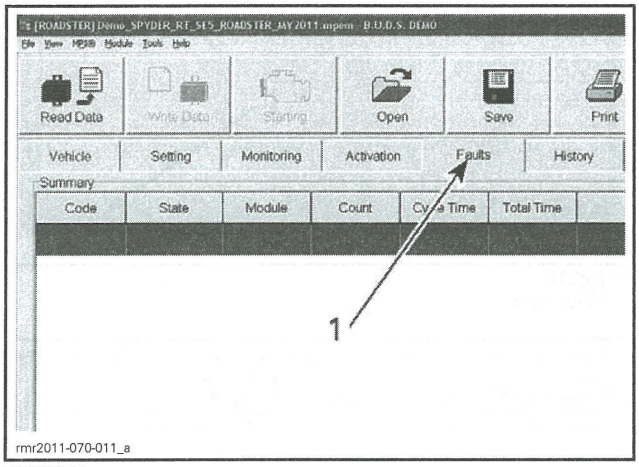

TYPICAL
1. *Fault tab*

4. Click on the drop-down list on the LH lower corner.
5. Choose the fault state to display.

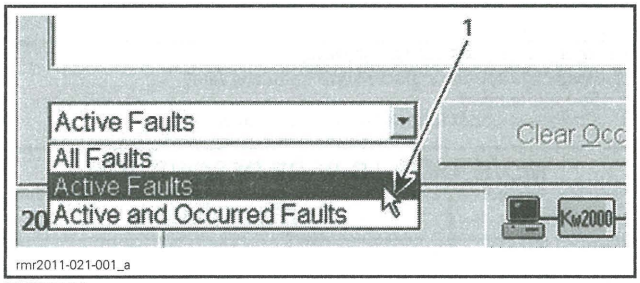

TYPICAL
1. *Drop down list*

FAULT STATE	INFORMATION
All faults	Display all possible faults regardless of state
Active faults	Display only faults matching this state. Empty area if there is no active fault
Active and occurred faults	Display only faults that have either state. Empty area if there is neither active nor occurred fault

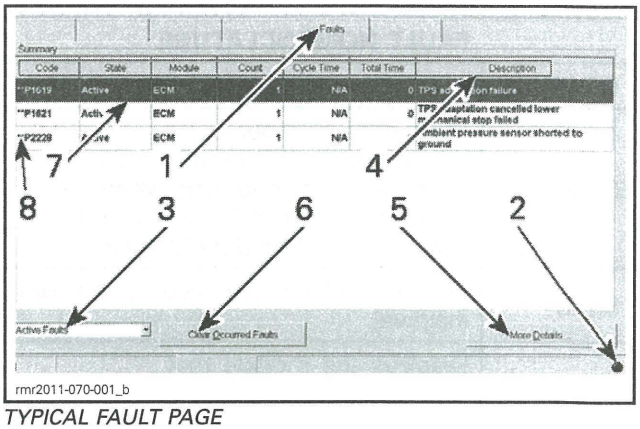

TYPICAL FAULT PAGE
1. *Fault tab*
2. *Fault indicator light*
3. *Fault code state drop box*
4. *Fault nomenclature*
5. *More details button*
6. *Clear occurred faults button*
7. *Selected fault*
8. *More information indicator*

FAULT PAGE DESCRIPTION	
ITEM	INFORMATION
Fault tab	Click tab to display the fault page
Fault indicator light	When flashing, it indicates there is active fault(s)
Fault code state drop box	Click drop box to select the type of faults to display
Fault nomenclature	Display specific information and statistics related to the fault (see fault nomenclature table)
More details button	To display possible causes and service actions related to the selected fault
Clear occurred faults button	To clear all occurred faults in related ECU(s)
Selected fault	When a fault is selected, additional information pertaining to that fault will be displayed when clicking the "More details" button. To select a fault, click on the fault with the mouse or use the cursor up or down to scroll to the desired fault

FAULT NOMENCLATURE	
COLUMN	INFORMATION
Code	Fault code number. When 2 stars (**) precedes the code, detailed conditions when the fault occurred, can be displayed by clicking the "More details" button
State	Display the fault state (active, occurred, inactive)
Module	Displays the module that reports the fault code. This is the module that detects or has received a message of an anomaly and reports it. List of modules: Multifunction gauge ECM (engine control module) iBR (intelligent brake and reverse) iS (intelligent suspension)
Count	Number of times this fault occurred within the driving cycle Value: From 0 to 255
Cycle time	Not to be used Value: From 0 to 255 minutes
Total time	Not to be used Value: From 0 to 64 255 minutes
Description	Provides a short description of the fault

When reading a fault code in B.U.D.S., pay particular attention to which module reports a fault. It is indicated in the **Module** column.

The **Description** column gives a short description of the fault.

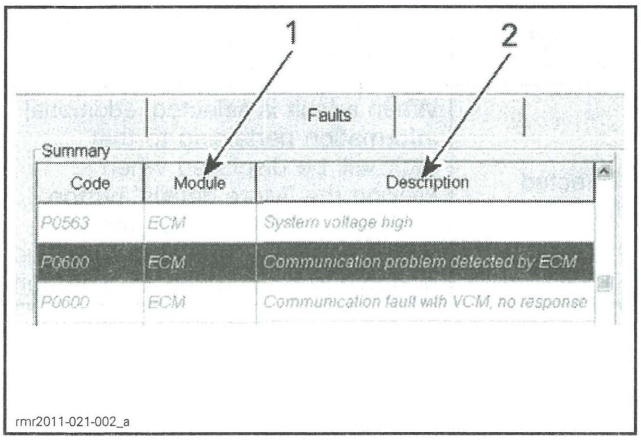

SOME COLUMNS REMOVED FOR CLARITY PURPOSE
1. *Module that reports a fault*
2. *Fault description*

Click on the **More Details** button, on the RH lower corner, to display the "Possible Causes" and the "Service Actions" to step further in the diagnosis.

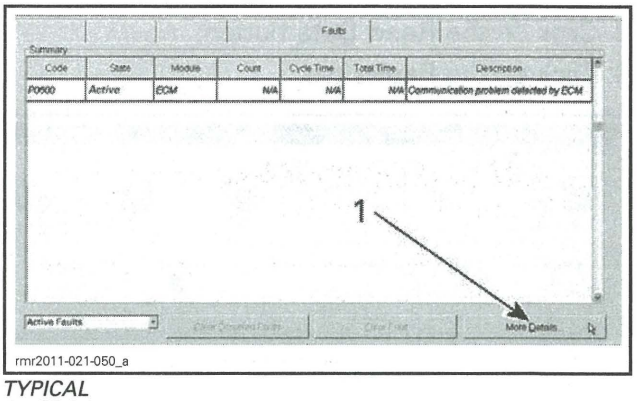

TYPICAL
1. *Click here*

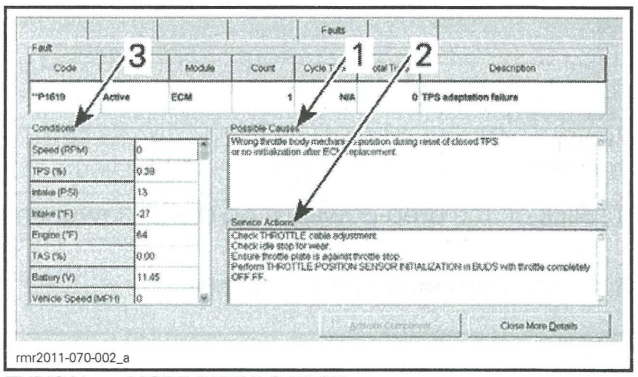

TYPICAL — MORE DETAILS PAGE
1. *Possible causes related to the selected fault*
2. *Service actions*
3. *Operating conditions when fault occurred*

MORE DETAILS PAGE DESCRIPTION	
ITEM	INFORMATION
Possible causes	List the possible causes that triggered the fault
Service actions	List the possible actions to perform to solve the fault
Conditions when fault occurred	List the operating conditions of the engine and/or vehicle when the fault was triggered

Fault Code States

The various electronic control units (ECUs) used in the vehicle can generate a variety of fault codes depending on the level of monitoring they are capable of. Fault codes have 3 possible states:

- Active
- Occurred
- Inactive.

Click the **Fault** tab then click on the drop-down list on the LH lower corner.

Choose the fault code state you want to display.

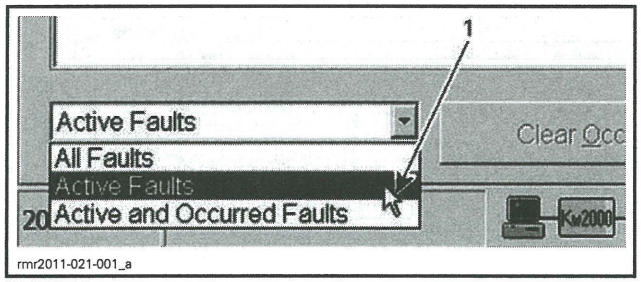

TYPICAL
1. Drop down list

FAULT STATE	INFORMATION
All faults	Display all possible faults regardless of state
Active faults	Display only faults matching this state. Empty area if there is no active fault
Active and occurred faults	Display only faults that have either state. Empty area if there is neither active nor occurred fault

Active Fault Codes

An active fault code is an indication of a fault that is **currently triggered**.

The active fault may or may not compromise normal operation of the related system(s). Service action in B.U.D.S. should be used to correct the problem that caused the fault code.

Once the fault condition(s) of the active fault is no longer present, its state will change to "occurred".

Occurred Fault Codes

An occurred fault code indicates a fault that was active, but **no longer** is.

The occurred fault does not presently affect system or component operation but is retained as a history of the faults that were detected.

Inactive Fault Codes

An inactive fault code represents a fault code that is neither active, nor occurred. It is simply part of a list of all possible faults which may be monitored by the various ECUs, which may become active or occurred if the monitoring system detects an applicable fault.

How to Clear Fault Codes Using B.U.D.S.

Connect vehicle to the latest applicable B.U.D.S. software. Refer to *COMMUNICATION TOOLS AND B.U.D.S.* subsection.

Click on the **Read Data** button.

Click on the **Faults** tab.

NOTE: Only the **Occurred** state faults can be cleared.

Click the **Clear Occurred Faults** button.

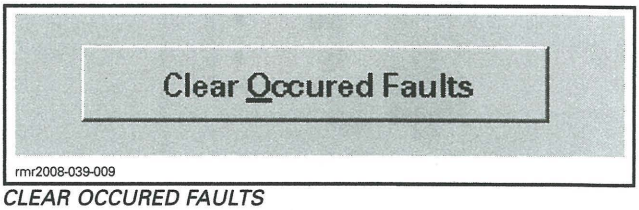

CLEAR OCCURED FAULTS

This will reset the appropriate counter(s) and will also record that the problem has been fixed in the related module memory.

Observe the "Occurred" fault(s). They should all disappear. Otherwise, follow this procedure.

- Remove tether cord cap from engine cut-off switch.
- Wait 3 minutes.
- Repeat procedure to clear faults again.

FAULT CODE DIAGNOSTIC

Missing Module

If a module is missing, several fault codes will appear.

To quickly find which module is missing, perform the following:

1. Connect vehicle to the latest applicable B.U.D.S. software. Refer to *COMMUNICATION TOOLS AND B.U.D.S.* subsection.
2. Click on the **Read Data** button.
3. Click **Module** in the menu bar.
4. Look at the list of modules.
5. If a module is not visible, then it is not communicating through the CAN bus (controller area network).

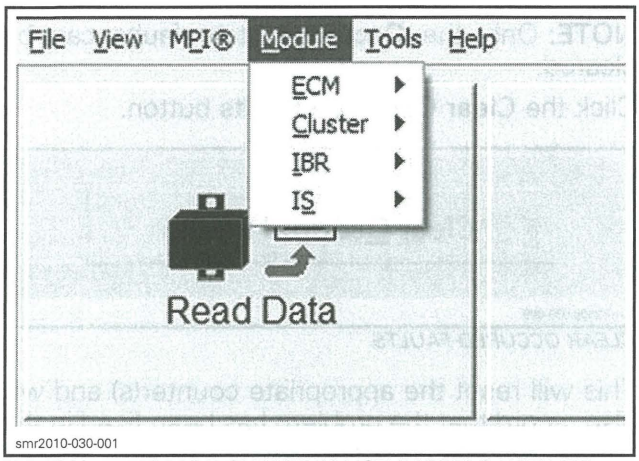

TYPICAL — MODULE SUBMENU LIST (MODELS WITH iBR AND iS)

6. Refer to the following table to find the appropriate subsection in this manual to diagnose the missing module.

MISSING MODULE	SECTION TO REFER TO
ECM	*ELECTRONIC FUEL INJECTION (EFI)*
Cluster	*GAUGE*
iBR	*iBR AND VTS*
iS	*SUSPENSION (iS)*

Diagnostic Tips Using B.U.D.S.

History Page

HISTORY PAGE DESCRIPTION	
ITEM	INFORMATION
Last minute	Displays several parameters recorded in the last minute of engine operation
Minimum/ Maximum	Display the minimum and maximum values encountered. Click "Clear Min/Max" to reset the values
Run time	Display the time proportion in what mode the engine was running in
RPM profile	Display the RPM range proportion in which the engine was running in

To see the last minute of operating conditions, click on the **History** tab in B.U.D.S.

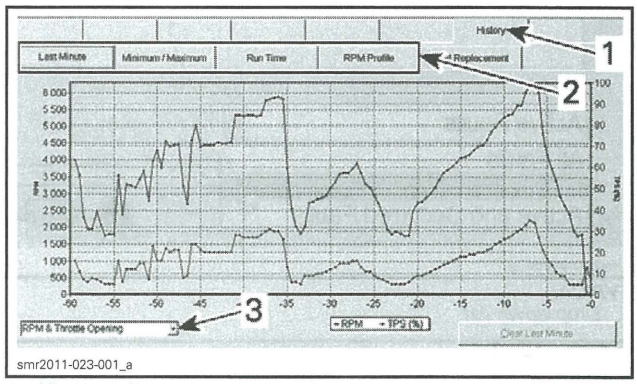

1. *History tab*
2. *Additional history pages*
3. *Drop-down list in Last Minute page*

Last Minute Drop-Down List:

From the **Last Minute** page, click on the drop-down list on the LH lower corner.

Choose the values to display.

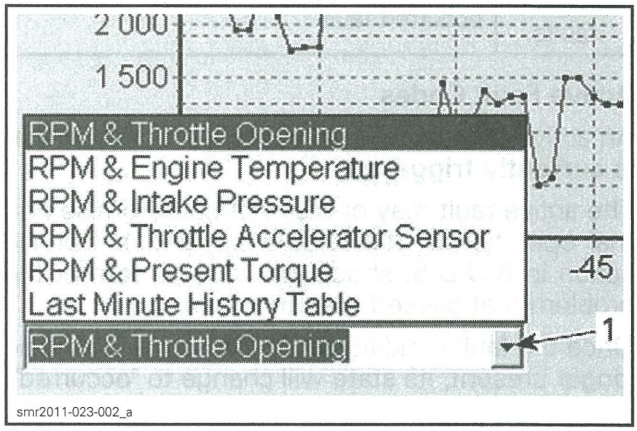

1. *Drop down list*

Guidelines to Solve Fault Codes

CONDITION	ACTION
Troubleshooting vehicle	Use B.U.D.S. to: Read fault codes. Display "Active" faults to see components currently not operating normally. Display "Occurred" faults to troubleshoot intermittent problems. Monitor system(s), sensor(s), switches and actual conditions. Activate component(s) for troubleshooting. Set components etc. Know the last minute of operating conditions by using the "History" page. Know the operating conditions, if available, when a fault code occurred by using the "More details" button in the fault page.
New fault(s) appear after a vehicle maintenance or repair	Check sensor connections or mixed up connections. **Before** vehicle maintenance: Read the electronic modules with B.U.D.S. Save and print the B.U.D.S. file (keep faults option only). **After** vehicle maintenance: Read the electronic modules with B.U.D.S. Compare the fault code(s) before and after the maintenance using the printed copy and the current B.U.D.S. reading. Investigate only the newly fault codes. Clear all occurred faults in B.U.D.S.
Communication faults displayed as "Occurred" after module flashing	Normal behavior when flashing a module. Clear all occurred faults and check again.
Sensor "Active" fault	Read the fault description in B.U.D.S. Click on the "More Details" button. Look at the "Conditions" when available. Read the "Possible Causes". Apply the "Service Actions".
Several fault codes active at the same time	Likely to be caused by burnt fuse(s) or bad bus bar connection(s).
Low system voltage on one module Power problem on sensor(s)	Check related fuse(s) and relay. Check related power and ground wires. Check for common power supply to several sensors/modules (refer to *POWER DISTRIBUTION AND GROUNDS)*. **NOTE:** Some sensors are supplied by the battery while others are supplied by a module.
Low system voltage on several modules (several communication faults will also appear)	Check battery condition and connections. Check related fuse(s) and relay. Check voltage regulator/rectifier.
High system voltage on several modules	A battery charger has likely been used to substitute the vehicle battery. Clear all occurred faults and check again. Check voltage regulator/rectifier.
When all modules report that a module is missing	Check the module that is reported as missing. Check related fuse(s) and relay. Check related power and ground wires.
When several modules are in fault	Search for a common problem such as a faulty sensor.

CONDITION	ACTION
CAN bus failure, CAN buss OFF	When several modules and sensors report that a module is missing. The missing module may report CAN bus failure, CAN bus off. Check related CAN wires (continuity, short to ground, short between CAN low and high). Check module pins and wiring terminals. Then, the other modules should stop reporting that module is missing.
Occurred fault(s)	May have been generated due to a system or component that was momentarily operating outside normal parameters.
	May be generated when disconnecting and reconnecting a component, replacing a burnt fuse, or may be due to a momentary high or low voltage.
	Before being "Occurred", a fault has always been "Active" for a certain time, indicating that an unexpected condition or problem has been present during the driving cycle. A frequent momentarily fault or an intermittent fault may never be seen as "Active" in B.U.D.S. while there is still a pending problem. This type of malfunctions can be discovered by looking at the "Occurred" faults and then by evaluating the fault count. As long as a fault is present, it is displayed as "Active".
Fault count (0 - 255)	**Low value:** Suggests handling problems (connections, terminal contact/shape etc.). **High value:** Suggests a frequent and unsolved problem. The problem should be investigated.
Fault conditions (More details button)	Look for abnormal, excessive values.
Hard to find problems	When the basic troubleshooting has been done and the fault code(s) persists, often the problem is related to the wiring harness, connections or electromechanical components. Short to ground, to battery or between wires. Wire splices, chafing, terminal problems (pulled out, bent, out of shape, corroded etc.). Bad contacts in switch or relay.

GUIDELINES TO SOLVE SPECIFIC FAULT CODES

Several Fault Codes Are Active Simultaneously

If this occurs, check the following:

- Check the 30 A fuses in fuse box.
- Check the bus bar condition and connections in the fuse box(es).
- Check the diagnostic connector for the presence of water or corrosion.
- Check the CAN wires.

Fault Code C2100

iBR Sensors calibration is corrupted If the fault comes active when the iBR is activated and stays active, verify if a software update is available.

Fault Code C2120

iBR Application calibration is corrupted If the fault comes active when the iBR is activated and stays active, verify if a software update is available.

Fault Code C2121, C2221

iBR or iS application parameters corrupted (backup no. 1 or no. 2). This fault may occasionally appear as occurred. It happens when power to the module is shut off before the module has time to complete its shutdown. Normal operation is not affected. If it occurs often, check supply voltage to module.

Fault Code C2150, C2233, C2250

iBR or iS motor or system current software breaker. Motor or module current too high. This fault may occasionally appear as occurred. Normal operation is not affected. If it the count is high, check the moving mechanism of the system if it is stiffer than normal to operate.

Fault Code C2232

Motor open. If suspension operates when using the iS Up/Down switches, the suspension will operate normally when riding even if this fault is active. In this case, the fault can be ignored. The fault will be set to "occurred" when the iS module will be shut down. If the suspension does not operate when using the iS Up/Down switches, refer to *SUSPENSION (iS)* subsection.

Fault Code P0122 and P0123

The TAS signal #1, the TOPS and MAPS sensors share the same 5 volt supply. If one of the sensor is using too much power, the voltage will drop which may result in the fault codes appearing on the other sensors. If the fault code becomes active verify power input in all 3 sensors.

Fault Code P0562

Battery voltage too low. It occurs when both battery voltage and engine RPM conditions are met. See following chart. Refer to *CHARGING SYSTEM* subsection.

BATTERY VOLTAGE	ENGINE SPEED
Lower than 6.5 Vdc	Lower than 1280 RPM
Lower than 11.8 Vdc	Greater than 1280 RPM

Fault Code P0563

Battery voltage too high. It occurs when battery voltage is above 16 Vdc when engine is running. Refer to *CHARGING SYSTEM*.

Fault Code P0171

Multiplicative mixture adaptation exceeds upper limit--> mixture too lean. An open signal on the engine coolant temperature (CTS) can trigger that fault. Refer to *ELECTRONIC FUEL INJECTION (EFI)* subsection.

Fault Code P0172

Multiplicative mixture adaptation below lower limit--> mixture too rich. An open signal on the engine coolant temperature (CTS) can trigger that fault. Refer to *ELECTRONIC FUEL INJECTION (EFI)* subsection.

Fault Code P1171

Additive mixture adaptation exceeds upper limit--> mixture too lean. An open signal on the engine coolant temperature (CTS) can trigger that fault. Refer to *ELECTRONIC FUEL INJECTION (EFI)* subsection.

Fault Code P1172

Additive mixture adaptation below lower limit --> mixture too rich. An open signal on the engine coolant temperature (CTS) can trigger that fault. Refer to *ELECTRONIC FUEL INJECTION (EFI)* subsection.

Fault Code U016A

Loss of vehicle speed. This fault may occasionally appear as occurred. Normal operation is not affected. If the count is high, check the related components.

Fault Code U0129

CAN communication error between iS and iBR modules or **iBR CAN message time-out or validity.** This fault may occasionally appear as occurred. Normal operation is not affected. If the count is high, check the related components. Ensure connector is plugged.

Fault Code U0300

Incorrect ECM or information center for the engine. Installed part is not appropriate for the vehicle. Using B.U.D.S., check if the security coding of the cluster is matched with the ECM security coding. **Engine will crank but will not start.** Refer to *PARTS CATALOGS* for proper part according to vehicle.

FAULT CODE TABLE

NOTE: Always refer to the fault code list available in the latest applicable version of B.U.D.S. software.

When using the service action suggested in the Fault section of B.U.D.S., the system circuits are referred as A-M4 for instance. It means ECM connector "A" and the circuit wire M4 as found in the *WIRING DIAGRAM*.

P-CODE	MODULE	DESCRIPTION	CAUSE	ACTION
B2210	CLUSTER	Left keypad fault (switch kept activated more than 60 seconds)	Problem with left keypad.	The switch may be defective, verify the functionality of the switch or the wires. Refer to the *SHOP MANUAL* for switch diagnosis/testing procedure.
B2211	CLUSTER	Suspension UP/DOWN or SPORT/ECO switches shorted to ground fault	Problem with left keypad.	Look for pin B if shorted to ground or pin C.
B2212	CLUSTER	Suspension UP/DOWN or SPORT/ECO switches disconnected fault	Problem with left keypad.	Look for pin B if disconnected to pin 14 on the cluster. Look for pin C if disconnected to pin 15 on the cluster.
B2213	CLUSTER	VTS UP/DOWN switches shorted to ground fault	Problem with left keypad.	Look for pin A if shorted to ground or pin C.
B2214	CLUSTER	VTS UP/DOWN switches disconnected fault	Problem with left keypad.	Look for pin A if disconnected to pin 13 on the cluster. Look for pin C if disconnected to pin 15 on the cluster.
B2220	CLUSTER	Right keypad fault (switch kept activated more than 60 seconds)	Problem with right keypad.	The switch may be defective, verify the functionality of the switch or the wires. Refer to the *SHOP MANUAL* for switch diagnosis/testing procedure.
B2221	CLUSTER	MODE/SET switches shorted to ground fault	Problem with right keypad.	Look for pin B if shorted to ground or pin C.
B2222	CLUSTER	MODE/SET switches disconnected fault	Problem with right keypad.	Look for pin B if disconnected to pin 17 on the cluster. Look for pin C if disconnected to pin 18 on the cluster.
B2223	CLUSTER	UP/DOWN switches shorted to ground fault	Problem with right keypad.	Look for pin A if shorted to ground or pin C.
B2224	CLUSTER	UP/DOWN switches disconnected fault	Problem with right keypad.	Look for pin A if disconnected to pin 16 on the cluster. Look for pin C if disconnected to pin 18 on the cluster.
C0042	IBR	Brake Lever Sensor (BRLS) signals A open/ shorted to ground	Damaged sensor, damaged circuit wires, damaged connector or damaged iBR pins. Fault detected when the engine is running or stopped.	Check for 0,5 to 3V on pin F and 0.25 to 1.5 on pin C.

P-CODE	MODULE	DESCRIPTION	CAUSE	ACTION
C0042	IBR 2013	Brake Lever Sensor (BRLS) signals A open/ shorted to ground	Damaged sensor, damaged circuit wires, damaged connector or damaged iBR pins. Fault detected when the engine is running or stopped.	Check for 0,5 to 3V on pin F and 0.25 to 1.5 on pin C.
C0043	IBR	Brake Lever Sensor (BRLS) signals B open/shorted to ground	Damaged sensor, damaged circuit wires, damaged connector or damaged iBR pins. Fault detected when the engine is running or stopped.	Check for 0,5 to 3V on pin F and 0.25 to 1.5 on pin C.
C0043	IBR 2013	Brake Lever Sensor (BRLS) signals B open/shorted to ground	Damaged sensor, damaged circuit wires, damaged connector or damaged iBR pins. Fault detected when the engine is running or stopped.	Check for 0,5 to 3V on pin F and 0.25 to 1.5 on pin C.
C0073	IBR	Torque request failure	CPS wires shorted. Bad connection on the engine coolant temp sensor.	Perform ECM software update if available. Verify CPS connection. Verify engine temperature if it is plausible. A bad connection with the CTS can generate this fault when the iBR is used.
C0073	IBR 2013	Torque request failure	CPS wires shorted. Bad connection on the engine coolant temp sensor.	Perform ECM software update if available. Verify CPS connection. Verify engine temperature if it is plausible. A bad connection with the CTS can generate this fault when the iBR is used.
C2100	IBR	Sensors calibration is corrupted	Incompatible firmware or memory failure.	If the fault comes active when the iBR is activated and stays active, verify if a software update is available. Refer to the *SHOP MANUAL* for more details.
C2100	IBR	Actuator movement	The reverse gate cannot move to the desired position. (stuck or motor open)	Clean and check for damage/ wear parts in the reverse system and nozzle area. Check iBR electrical motor wiring. Isolate the iBR output shaft from the reverse system and activate the iBR, if the fault comes active, replace iBR. Refer to the *SHOP MANUAL* for more details.

P-CODE	MODULE	DESCRIPTION	CAUSE	ACTION
C2100	IBR 2013	Sensors calibration is corrupted	Incompatible firmware or memory failure.	If the fault comes active when the iBR is activated and stays active, verify if a software update is available. Refer to the *SHOP MANUAL* for more details.
C2101	IBR	Actuator movement warning	The reverse gate cannot move to the desired position within expected time.	Clean and check for damage/ wear parts in the reverse system and nozzle area. Check iBR electrical motor wiring. Isolate the iBR output shaft from the reverse system and activate the iBR, if the fault comes active, replace iBR. Refer to the *SHOP MANUAL* for more details.
C2101	IBR 2013	Actuator movement warning	The reverse gate cannot move to the desired position within expected time.	Clean and check for damage/ wear parts in the reverse system and nozzle area. Check iBR electrical motor wiring. Isolate the iBR output shaft from the reverse system and activate the iBR, if the fault comes active, replace iBR. Refer to the *SHOP MANUAL* for more details.
C2102	IBR 2013	Actuator movement	The reverse gate cannot move to the desired position. (stuck or motor open).	Clean and check for damage/ wear parts in the reverse system and nozzle area. Check iBR electrical motor wiring. Isolate the iBR output shaft from the reverse system and activate the iBR, if the fault comes active, replace iBR. Refer to the *SHOP MANUAL* for more details.
C2110	IBR	Reverse gate position sensor error	iBR malfunction.	If the fault comes active when the iBR is activated and stays active, verify if a software update is available. Refer to the *SHOP MANUAL* for more details.
C2110	IBR	Angle position sensor warning	iBR malfunction.	If the fault comes active when the iBR is activated and stays active, verify if a software update is available. Refer to the *SHOP MANUAL* for more details.
C2110	IBR	iBR overheat	iBR cooling system failure. iBR unit failure.	Check iBR cooling circuit. Refer to the *SHOP MANUAL* for more details.

P-CODE	MODULE	DESCRIPTION	CAUSE	ACTION
C2110	IBR	Monitoring CPU message time-out or validity	iBR malfunction.	Perform an iBR software update if available and clear the fault. Replace the iBR unit if the fault remains active. Refer to the *SHOP MANUAL* for more details.
C2110	IBR	Monitoring CPU limp force	iBR malfunction.	Perform an iBR software update if available. Replace the iBR unit if the fault remains active. Refer to the *SHOP MANUAL* for more details.
C2110	IBR 2013	Reverse gate position sensor error	iBR malfunction.	If the fault comes active when the iBR is activated and stays active, verify if a software update is available. Refer to the *SHOP MANUAL* for more details.
C2111	IBR	ECM erratic RPM signal	RPM signal received from engine ECM not plausible.	Check CPS sensor connection
C2112	IBR 2013	Angle position sensor warning	iBR malfunction.	If the fault comes active when the iBR is activated and stays active, verify if a software update is available. Refer to the *SHOP MANUAL* for more details.
C2113	IBR 2013	iBR overheat	iBR cooling system failure. iBR unit failure.	Check iBR cooling circuit. Refer to the *SHOP MANUAL* for more details.
C2114	IBR 2013	Monitoring CPU message time-out or validity	iBR malfunction.	Perform an iBR software update if available and clear the fault. Replace the iBR unit if the fault remains active. Refer to the *SHOP MANUAL* for more details.
C2115	IBR 2013	Monitoring CPU limp force	iBR malfunction.	Perform an iBR software update if available. Replace the iBR unit if the fault remains active Refer to the *SHOP MANUAL* for more details.
C2120	IBR	Application calibration is corrupted	Incompatible firmware or memory failure.	If the fault comes active when the iBR is activated and stays active, verify if a software update is available. Refer to the *SHOP MANUAL* for more details.
C2120	IBR 2013	Application calibration is corrupted	Incompatible firmware or memory failure.	If the fault comes active when the iBR is activated and stays active, verify if a software update is available. Refer to the *SHOP MANUAL* for more details.

P-CODE	MODULE	DESCRIPTION	CAUSE	ACTION
C2121	IBR	Application parameters corrupted (backup #1 or #2)	Unexpected battery power lost or memory failure. Ignore fault if "occurred"	Verify starting and charging system circuits. Clear fault. Refer to the *SHOP MANUAL* for more details.
C2121	IBR 2013	Application parameters corrupted (backup #1 or #2)	Unexpected battery power lost or memory failure. Ignore fault if "occurred"	Verify starting and charging system circuits. Clear fault. Refer to the *SHOP MANUAL* for more details.
C2130	IBR	Motor current software breaker	iBR motor current too high. Battery power failure. iBR unit failure.	Clean and check for damage in the reverse gate and nozzle area. Refer to the *SHOP MANUAL* for more details.
C2130	IBR	Internal motor drive failure	Motor voltage feedback not fitting with the command.	
C2130	IBR 2013	Motor current software breaker	iBR motor current too high. Battery power failure. iBR unit failure.	Clean and check for damage in the reverse gate and nozzle area. Refer to the *SHOP MANUAL* for more details.
C2131	IBR	iBR DC motor shorted to ground or 12V	iBR motor failure. iBR motor wires damaged. Battery power failure. iBR unit failure.	Perform an iBR update with B.U.D.S. Check iBR battery power. Check iBR Motor Wiring. Refer to the *SHOP MANUAL* for more details.
C2131	IBR 2013	iBR DC motor shorted to ground or 12V	iBR motor failure. iBR motor wires damaged. Battery power failure. iBR unit failure.	Perform an iBR update with B.U.D.S. Check iBR battery power. Check iBR Motor Wiring. Refer to the *SHOP MANUAL* for more details.
C2132	IBR	Motor Open	No current while activated.	Verify if the motor is properly connected to the iBR housing
C2132	IBR 2013	Motor Open	No current while activated.	Verify if the motor is properly connected to the iBR housing.
C2133	IBR 2013	Internal motor drive failure	Motor voltage feedback not fitting with the command.	
C2142	IBR	Brake Lever Sensor (BRLS) signals A shorted to battery	Damaged sensor, damaged circuit wires, damaged connector or damaged iBR pins. Fault detected when the engine is running or stopped.	Check for 0,5 to 3V on pin F and 0.25 to 1.5 on pin C.
C2142	IBR 2013	Brake Lever Sensor (BRLS) signals A shorted to battery	Damaged sensor, damaged circuit wires, damaged connector or damaged iBR pins. Fault detected when the engine is running or stopped.	Check for 0,5 to 3V on pin F and 0.25 to 1.5 on pin C.

P-CODE	MODULE	DESCRIPTION	CAUSE	ACTION
C2143	IBR	Brake Lever Sensor (BRLS) signals B shorted to battery	Damaged sensor, damaged circuit wires, damaged connector or damaged iBR pins. Fault detected when the engine is running or stopped.	Check for 0,5 to 3V on pin F and 0.25 to 1.5 on pin C.
C2143	IBR 2013	Brake Lever Sensor (BRLS) signals B shorted to battery	Damaged sensor, damaged circuit wires, damaged connector or damaged iBR pins. Fault detected when the engine is running or stopped.	Check for 0,5 to 3V on pin F and 0.25 to 1.5 on pin C.
C2144	IBR	Brake Lever Sensor (BRLS) power shorted to battery	Damaged sensor, damaged circuit wires, damaged connector or damaged iBR pins. Fault detected when the engine is running or stopped.	Check for 4.5 to 5 volts on sensor connector pin A & D. Refer to the *SHOP MANUAL* for more details.
C2144	IBR 2013	Brake Lever Sensor (BRLS) power shorted to battery	Damaged sensor, damaged circuit wires, damaged connector or damaged iBR pins. Fault detected when the engine is running or stopped.	Check for 4.5 to 5 volts on sensor connector pin A & D. Refer to the *SHOP MANUAL* for more details.
C2145	IBR	Brake Lever Sensor (BRLS) power shorted to ground	Damaged sensor, damaged circuit wires, damaged connector or damaged iBR pins. Fault detected when the engine is running or stopped.	Check for 4.5 to 5 volts on sensor connector pin A & D. Refer to the *SHOP MANUAL* for more details.
C2145	IBR 2013	Brake Lever Sensor (BRLS) power shorted to ground	Damaged sensor, damaged circuit wires, damaged connector or damaged iBR pins. Fault detected when the engine is running or stopped.	Check for 4.5 to 5 volts on sensor connector pin A & D. Refer to the *SHOP MANUAL* for more details.
C2146	IBR	Brake Lever Sensor (BRLS) signals A/B reading difference	Damaged sensor, damaged circuit wires, damaged connector or damaged iBR pins. Fault detected when the engine is running or stopped.	Check for 0,5 to 3V on pin F and 0.25 to 1.5 on pin C.
C2146	IBR 2013	Brake Lever Sensor (BRLS) signals A/B reading difference	Damaged sensor, damaged circuit wires, damaged connector or damaged iBR pins. Fault detected when the engine is running or stopped.	Check for 0,5 to 3V on pin F and 0.25 to 1.5 on pin C.
C2150	IBR	System current software breaker	iBR input current too high.	Clean and check for damage in the reverse gate and nozzle area. Refer to the *SHOP MANUAL* for more details.

P-CODE	MODULE	DESCRIPTION	CAUSE	ACTION
C2150	IBR 2013	System current software breaker	iBR input current too high.	Clean and check for damage in the reverse gate and nozzle area. Refer to the *SHOP MANUAL* for more details.
C2151	IBR	System disabled and need activation	System is locked. Need activation.	Use B.U.D.S. iBR unlock function. Refer to the *SHOP MANUAL* for more details.
C2151	IBR 2013	System disabled and need activation	System is locked. Need activation.	Use B.U.D.S. iBR unlock function. Refer to the *SHOP MANUAL* for more details.
C2155	IBR	Water temperature sensor overheat	iBR cooling system failure. iBR unit failure.	Check iBR cooling circuit. Replace iBR unit. Refer to the *SHOP MANUAL* for more details.
C2155	IBR 2013	Water temperature sensor overheat	iBR cooling system failure. iBR unit failure.	Check iBR cooling circuit. Replace iBR unit. Refer to the *SHOP MANUAL* for more details.
C2161	IBR	Low voltage detected	Battery failure, rectifier failure, damaged circuit wires, battery terminal connection, damaged AC generator or damaged connectors. Ignore fault if "occurred"	Check fuses #6 (refer to *WIRING DIAGRAM*). Check ground continuity to the engine block. Refer to the *SHOP MANUAL* for more details.
C2161	IBR 2013	Low voltage detected	Battery failure, rectifier failure, damaged circuit wires, battery terminal connection, damaged AC generator or damaged connectors. Ignore fault if "occurred"	Check fuses #6 (refer to *WIRING DIAGRAM*). Check ground continuity to the engine block. Refer to the *SHOP MANUAL* for more details.
C2200	IS	Sensors calibration is corrupted	Incompatible firmware or memory failure.	If the fault comes active when the iS is activated and stays active, verify if a software update is available. Refer to the *SHOP MANUAL* for more details.
C2210	IS	Bridge/CPU temperature sensor overheat	Hardware failure or external heat source.	Check for over utilization/heat.
C2220	IS	Application calibration is corrupted	Incompatible firmware or memory failure.	If the fault comes active when the iS is activated and stays active, verify if a software update is available. Refer to the *SHOP MANUAL* for more details.

P-CODE	MODULE	DESCRIPTION	CAUSE	ACTION
C2221	IS	Application parameters corrupted (backup #1 or #2)	Unexpected battery power lost or memory failure. Ignore fault if "occured".	Verify starting and charging system circuits. Clear fault. Refer to the *SHOP MANUAL* for more details.
C2230	IS	Internal motor drive failure	Motor voltage feedback not fitting with the command.	If the fault comes active when the iS is activated and stays active, verify if a software update is available. Refer to the *SHOP MANUAL* for more details.
C2231	IS	Motor shorted to ground/battery	Current leak detected when the bridge is off.	Check suspension actuator pump wiring.
C2232	IS	Motor open	No current while activated.	Check suspension actuator pump and/or wiring.
C2233	IS	Motor current software breaker	Motor current too high.	Check suspension actuator pump.
C2240	IS	Seat position sensor error Open, Shorted to Gnd	Sensor not connected.	Check system circuit at iS module (refer to *WIRING DIAGRAM*).
C2250	IS	System current software breaker	Battery input current too high.	Check suspension actuator pump.
C2251	IS	System disabled and need activation	System is locked for safety. Need activation.	Activate iS using B.U.D.S. activation function.
C2252	IS	TOPS active	Warning only: TOPS detected by the system, the suspension is disable while the TOPS is "ON".	Refer to the *SHOP MANUAL* for more details.
C2260	IS	System under voltage	System under voltage warning.	Check battery and charging system.
P0106	ECM	Manifold Intake pressure sensor out of range	Sensing port dirty or blocked. Sensor failure or unexpected reading at idle. Sensor fallen out of housing or leaking inlet. For a leak of the Intake Manifold, the ECM will diagnose it only if the RPM is greater than 5000 RPM.	Check system circuits A-B4, A-G4, A-H2. Make sure that the sensor housing is correctly inserted into the manifold. Check sensor connector for: a) 5 volts supply from ECM on pin 1. b) Ground supply from ECM on pin 2. c) Analog voltage from sensor to ECM on pin 3. The 5 volt supply is shared between the TAS signal 1, TOPS and MAPS. Verify all three sensor if one is pulling too much current.

P-CODE	MODULE	DESCRIPTION	CAUSE	ACTION
P0107	ECM	Manifold absolute pressure sensor shorted to ground or not connected.	Sensing port dirty or blocked. Sensor failure or unexpected reading at idle. Sensor fallen out of housing or leaking inlet. Connector disconnected.	Check system circuits A-B4, A-G4, A-H2. Make sure that the sensor housing is correctly inserted into the manifold. Check sensor connector for: a) 5 volts on pin 1. b) 0 volt on pin 2. c) 0 volt on pin 3. The 5 volt supply is shared between the TAS signal 1, TOPS and MAPS. Verify all three sensor if one is pulling too much current.
P0108	ECM	Manifold absolute pressure sensor open circuit or shorted to battery	Sensing port dirty or blocked. Sensor failure or unexpected reading at idle. Sensor fallen out of housing or leaking inlet.	Check system circuits A-B4, A-G4, A-H2. Make sure that the sensor housing is correctly inserted into the manifold. Check sensor connector for: a) 5 volts on pin 1. b) 0 volt on pin 2. c) 0 volt on pin 3. The 5 volt supply is shared between the TAS signal 1, TOPS and MAPS. Verify all three sensor if one is pulling too much current.
P0112	ECM	Intake manifold temperature sensor shorted to ground	Damaged sensor, damaged circuit wires, damaged connector or damaged ECM pins.	Check the sensor for approximately 2280 to 2736 ohms at 19 to 21°C (66 to 70°F). Check for approximately 2280 to 2736 ohms at 19 to 21°C (66 to 70°F) between ECM connector pins A-H3 and A-J3. Refer to the *SHOP MANUAL* for more details.
P0113	ECM	Intake manifold temperature sensor open circuit or shorted to battery	Damaged sensor, damaged circuit wires, damaged connector or damaged ECM pins.	Check the sensor for approximately 2280 to 2736 ohms at 19 to 21°C (66 to 70°F). Check for approximately 2280 to 2736 ohms at 19 to 21°C (66 to 70°F) between ECM connector pins A-H3 and A-J3. Refer to the *SHOP MANUAL* for more details.

P-CODE	MODULE	DESCRIPTION	CAUSE	ACTION
P0116	ECM	Engine coolant temperature signal not plausible	Damaged sensor, damaged circuit wires, damaged connector or damaged ECM pins.	Check for debris or blockage in cooling system. Check the sensor for approximately 2280 to 2736 ohms at 19 to 21°C (66 to 70°F). Check for approximately 2280 to 2736 ohms at 19 to 21°C (66 to 70°F) between ECM connector pins A-A1 and A-J2. Refer to the *SHOP MANUAL* for more details.
P0117	ECM	Engine coolant temperature sensor fault - Short circuit to GND	Damaged sensor, damaged circuit wires, damaged connector or damaged ECM pins.	Check for debris or blockage in cooling system. Check the sensor for approximately 2280 to 2736 ohms at 19 to 21°C (66 to 70°F). Check for approximately 2280 to 2736 ohms at 19 to 21°C (66 to 70°F) between ECM connector pins A-A1 and A-J2. Refer to the *SHOP MANUAL* for more details.
P0118	ECM	Engine coolant temperature sensor fault - Short circuit to V+ or connector disconnected.	Engine overheated or damaged sensor. Connector disconnected.	Check for debris or blockage in cooling system. Check the sensor for approximately 2280 to 2736 ohms at 19 to 21°C (66 to 70°F). Check for approximately 2280 to 2736 ohms at 19 to 21°C (66 to 70°F) between ECM connector pins A-A1 and A-J2. Refer to the *SHOP MANUAL* for more details.
P0122	ECM	TAS (Throttle Accelerator sensor) 1 fault (short circuit to GND)	Damaged sensor, damaged circuit wires, damaged connector or damaged ECM pins.	Check system circuits B-E1, B-K1, B-K3. Check for 0 volt on sensor connector pin E. Check for 5 volts on sensor connector pin D. The 5 volt supply is shared between the TAS signal 1, TOPS and MAPS. Verify all three sensor if one is pulling too much current. Check for 0.5 to 3 volts on sensor connector pin F. Refer to the *SHOP MANUAL* for more details.

P-CODE	MODULE	DESCRIPTION	CAUSE	ACTION
P0123	ECM	TAS (Throttle Accelerator sensor) 1 fault (short circuit to battery)	Damaged sensor, damaged circuit wires, damaged connector or damaged ECM pins.	Check system circuits B-E1, B-K1, B-K3. Check for 0 volt on sensor connector pin E. Check for 5 volts on sensor connector pin D. The 5 volt supply is shared between the TLS signal 1, TOPS and MAPS. Verify all three sensor if one is pulling too much current. Check for 0.5 to 3 volts on sensor connector pin F. Refer to the *SHOP MANUAL* for more details.
P0127	ECM	Intercooler system fault	High air intake temperature detected. Fault detected when the engine is running and stopped. Blocked intercooler water circuit.	Clean intercooler water circuit system. Refer to the *SHOP MANUAL* for more details.
P0171	ECM	Multiplicative mixture adaptation exceeds upper limit--> mixture too lean		An open signal on the Engine coolant temperature (CTS) can trigger that fault.
P0172	ECM	Multiplicative mixture adaptation below lower limit--> mixture too rich		An open signal on the Engine coolant temperature (CTS) can trigger that fault.
P0201	ECM	Injection Power Stage fault - open line/ Cylinder 1	Damaged injector, damaged circuit wires, damaged connector or damaged ECM output pins.	Check for 11.4 to 12.6 ohms between engine connector pin 2 and ECM connector pin A-B3. Check for 12 volts on pin 2 of injector connector. Check fuse #13 (refer to *WIRING DIAGRAM*) Check for damaged circuit wires. Refer to the *SHOP MANUAL* for more details.
P0202	ECM	Injection Power Stage fault - open line/ Cylinder 2	Damaged injector, damaged circuit wires, damaged connector or damaged ECM output pins.	Check for 11.4 to 12.6 ohms between engine connector pin 2 and ECM connector pin A-K1. Check for 12 volts on pin 2 of injector connector. Check fuse #14 (refer to *WIRING DIAGRAM*) Check for damaged circuit wires Refer to the *SHOP MANUAL* for more details.

P-CODE	MODULE	DESCRIPTION	CAUSE	ACTION
P0203	ECM	Injection Power Stage fault - open line/ Cylinder 3	Damaged injector, damaged circuit wires, damaged connector or damaged ECM output pins.	Check for 11.4 to 12.6 ohms between engine connector pin 3 and ECM connector pin A-J1. Check for 12 volts on pin 2 of injector connector. Check fuse #15 (refer to *WIRING DIAGRAM*) Check for damaged circuit wires. Refer to the *SHOP MANUAL* for more details.
P0217	ECM	High engine coolant temperature detected	High engine coolant temperature detected.	Check for debris or blockage in cooling system. Check the sensor for approximately 2280 to 2736 ohms at 19 to 21°C (66 to 70°F). Check for approximately 2280 to 2736 ohms at 19 to 21°C (66 to 70°F) between ECM connector pins A-A1 and A-J2. Refer to the *SHOP MANUAL* for more details.
P0222	ECM	TAS (Throttle Accelerator Sensor) 2 fault (short circuit to GND)	Damaged sensor, damaged circuit wires, damaged connector or damaged ECM pins.	Check system circuits B-A3, B-B3, B-J3. Check for 0 volt on sensor connector pin B. Check for 5 volts on sensor connector pin A. Check for 0.25 to 1.5 volts on sensor connector pin C. Refer to the *SHOP MANUAL* for more details.
P0223	ECM	TAS (Throttle Accelerator Sensor) 2 fault (short circuit to battery)	Damaged sensor, damaged circuit wires, damaged connector or damaged ECM pins.	Check system circuits B-A3, B-B3, B-J3. Check for 0 volt on sensor connector pin B. Check for 5 volts on sensor connector pin A. Check for 0.25 to 1.5 volts on sensor connector pin C. Refer to the *SHOP MANUAL* for more details.
P0231	ECM	Fuel pump open circuit or short to ground	Damaged pump, damaged circuit wires, damaged connector or damaged ECM output pins.	Check for approximately 1 ohm between pins A and B of the fuel pump connector. Check fuse #18 (refer to *WIRING DIAGRAM*) Check for damaged circuit wires. Check for damaged connector, damaged ECM output pins or ECM failure. Refer to the *SHOP MANUAL* for more details.

P-CODE	MODULE	DESCRIPTION	CAUSE	ACTION
P0232	ECM	Fuel pump short circuit to battery	Damaged pump, damaged circuit wires, damaged connector or damaged ECM output pins.	Check for approximately 1 ohm between pins A and B of the fuel pump connector. Check fuse #18 (refer to *WIRING DIAGRAM*) Check for damaged circuit wires. Check for damaged connector, damaged ECM output pins or ECM failure. Refer to the *SHOP MANUAL* for more details.
P0261	ECM	Injector 1 open circuit or shorted to ground	Damaged injector, damaged circuit wires, damaged connector or damaged ECM output pins.	Check for 11.4 to 12.6 ohms between engine connector pin 1 and ECM connector pin A-B3. Check for 12 volts on pin 2 of injector connector. Check fuse #13 (refer to *WIRING DIAGRAM*) Check for damaged circuit wires. Refer to the *SHOP MANUAL* for more details.
P0262	ECM	Injector 1 shorted to battery	Damaged injector, damaged circuit wires, damaged connector or damaged ECM output pins.	Check for 11.4 to 12.6 ohms between engine connector pin 1 and ECM connector pin A-B3. Check for 12 volts on pin 2 of injector connector. Check fuse #13 (refer to *WIRING DIAGRAM*) Check for damaged circuit wires. Refer to the *SHOP MANUAL* for more details.
P0264	ECM	Injector 2 open circuit or shorted to ground	Damaged injector, damaged circuit wires, damaged connector or damaged ECM output pins.	Check for 11.4 to 12.6 ohms between engine connector pin 2 and ECM connector pin A-K1. Check for 12 volts on pin 2 of injector connector. Check fuse #14 (refer to *WIRING DIAGRAM*) Check for damaged circuit wires. Refer to the *SHOP MANUAL* for more details.
P0265	ECM	Injector 2 shorted to battery	Damaged injector, damaged circuit wires, damaged connector or damaged ECM output pins.	Check for 11.4 to 12.6 ohms between engine connector pin 2 and ECM connector pin A-K1. Check for 12 volts on pin 2 of injector connector. Check fuse #14 (refer to *WIRING DIAGRAM*) Check for damaged circuit wires. Refer to the *SHOP MANUAL* for more details.

P-CODE	MODULE	DESCRIPTION	CAUSE	ACTION
P0267	ECM	Injector 3 open circuit or shorted to ground	Damaged injector, damaged circuit wires, damaged connector or damaged ECM output pins.	Check for 11.4 to 12.6 ohms between engine connector pin 3 and ECM connector pin A-J1. Check for 12 volts on pin 2 of injector connector. Check fuse #15 (refer to *WIRING DIAGRAM*) Check for damaged circuit wires. Refer to the *SHOP MANUAL* for more details.
P0268	ECM	Injector 3 shorted to battery	Damaged injector, damaged circuit wires, damaged connector or damaged ECM output pins.	Check for 11.4 to 12.6 ohms between engine connector pin 3 and ECM connector pin A-J1. Check for 12 volts on pin 2 of injector connector. Check fuse #15 (refer to *WIRING DIAGRAM*) Check for damaged circuit wires. Refer to the *SHOP MANUAL* for more details.
P0300	ECM	Multiple misfire detected		
P0301	ECM	Misfire cylinder 2 (physical cylinder 1)		
P0302	ECM	Misfire cylinder 0 (physical cylinder 2)		
P0303	ECM	Misfire cylinder 1 (physical cylinder 3)		
P0325	ECM	Knock sensor 1 fault	Damaged sensor, damaged circuit wires, damaged connector or damaged ECM output pins. Open circuit.	Bring engine to 5000 RPM. If fault code appears then check for approximately 5 M ohms between system circuits A-C3 and A-G2. Refer to the *SHOP MANUAL* for more details.
P0335	ECM	Crankshaft signal error	Damaged sensor, damaged circuit wires, damaged connector, damaged ECM pins or damaged tooth wheel. Connector disconnected.	For the CPS, check for 700 to 900 ohms between terminals A-H1 and A-K2 of ECM connector. Refer to the *SHOP MANUAL* for more details.
P0340	ECM	Camshaft 1 signal error	Damaged sensor, damaged circuit wires, damaged connector, damaged ECM pins or damaged tooth wheel. Connector disconnected.	For the CAPS, check for 12 volts on sensor connector pin 3. Check continuity for circuits A-D4, A-E2 and terminal 4 on engine connector. Check fuse #12 (refer to *WIRING DIAGRAM*) Engine must run to erase the corrected fault. Refer to the *SHOP MANUAL* for more details.

P-CODE	MODULE	DESCRIPTION	CAUSE	ACTION
P0351	ECM	Ignition coil 1 open circuit or shorted to ground or to battery	Damaged coil, damaged circuit wires, damaged connector or damaged ECM output pins.	Check for 0.85 to 1.15 ohms between engine connector pin 1 and ECM connector pin A-M4. Check for 12 volts on pin 2 of coil connector. Check fuse #13 (refer to *WIRING DIAGRAM*) Refer to the *SHOP MANUAL* for more details.
P0352	ECM	Ignition coil 2 open circuit or shorted to ground or to battery	Damaged coil, damaged circuit wires, damaged connector or damaged ECM output pins.	Check for 0.85 to 1.15 ohms between engine connector pin 1 and ECM connector pin A-M2. Check for 12 volts on pin 2 of coil connector. Check fuse #14 (refer to *WIRING DIAGRAM*) Refer to the *SHOP MANUAL* for more details.
P0353	ECM	Ignition coil 3 open circuit or shorted to ground or to battery	Damaged coil, damaged circuit wires, damaged connector or damaged ECM output pins.	Check for 0.85 to 1.15 ohms between engine connector pin 3 and ECM connector pin A-M1. Check for 12 volts on pin 2 of coil connector. Check fuse #15 (refer to *WIRING DIAGRAM*) Refer to the *SHOP MANUAL* for more details.
P0354	ECM	Ignition Power Stage fault - short circuit to GND/Cylinder 1	Damaged coil, damaged circuit wires, damaged connector or damaged ECM output pins.	Check for 0.85 to 1.15 ohms between engine connector pin 1 and ECM connector pin A-M4. Check for 12 volts on pin 2 of coil connector. Check fuse #13 (refer to *WIRING DIAGRAM*) Refer to the *SHOP MANUAL* for more details.
P0355	ECM	Ignition Power Stage fault - short circuit to GND/Cylinder 2	Damaged coil, damaged circuit wires, damaged connector or damaged ECM output pins.	Check for 0.85 to 1.15 ohms between engine connector pin 1 and ECM connector pin A-M2. Check for 12 volts on pin 2 of coil connector. Check fuse #14 (refer to *WIRING DIAGRAM*) Refer to the *SHOP MANUAL* for more details.
P0356	ECM	Ignition Power Stage fault - short circuit to GND/Cylinder 3	Damaged coil, damaged circuit wires, damaged connector or damaged ECM output pins.	Check for 0.85 to 1.15 ohms between engine connector pin 3 and ECM connector pin A-M1. Check for 12 volts on pin 2 of coil connector. Check fuse #15 (refer to *WIRING DIAGRAM*) Refer to the *SHOP MANUAL* for more details.

P-CODE	MODULE	DESCRIPTION	CAUSE	ACTION
P0357	ECM	Ignition Power Stage fault - short circuit to V+/Cylinder 1	Damaged coil, damaged circuit wires, damaged connector or damaged ECM output pins.	Check for 0.85 to 1.15 ohms between engine connector pin 1 and ECM connector pin A-M4. Check for 12 volts on pin 2 of coil connector. Check fuse #13 (refer to *WIRING DIAGRAM*) Refer to the *SHOP MANUAL* for more details.
P0358	ECM	Ignition Power Stage fault - short circuit to V+/Cylinder 2	Damaged coil, damaged circuit wires, damaged connector or damaged ECM output pins.	Check for 0.85 to 1.15 ohms between engine connector pin 1 and ECM connector pin A-M2. Check for 12 volts on pin 2 of coil connector. Check fuse #14 (refer to *WIRING DIAGRAM*) Refer to the *SHOP MANUAL* for more details.
P0359	ECM	Ignition Power Stage fault - short circuit to V+/Cylinder 3	Damaged coil, damaged circuit wires, damaged connector or damaged ECM output pins.	Check for 0.85 to 1.15 ohms between engine connector pin 3 and ECM connector pin A-M1. Check for 12 volts on pin 2 of coil connector. Check fuse #15 (refer to *WIRING DIAGRAM*) Refer to the *SHOP MANUAL* for more details.
P0360	ECM	Ignition Power stage max error & false detection of low battery voltage/Cylinder 1	Signal not plausible, verify battery voltage too low during ignition.	Check for 0.85 to 1.15 ohms between engine connector pin 1 and ECM connector pin A-M4. Check for 12 volts on pin 2 of coil connector. Check fuse #13 (refer to *WIRING DIAGRAM*) Refer to the *SHOP MANUAL* for more details.
P0361	ECM	Ignition Power stage max error & false detection of low battery voltage/Cylinder 2	Signal not plausible, verify battery voltage too low during ignition.	Check for 0.85 to 1.15 ohms between engine connector pin 1 and ECM connector pin A-M2. Check for 12 volts on pin 2 of coil connector. Check fuse #14 (refer to *WIRING DIAGRAM*) Refer to the *SHOP MANUAL* for more details.
P0362	ECM	Ignition Power stage max error & false detection of low battery voltage/Cylinder 3	Signal not plausible, verify battery voltage too low during ignition.	Check for 0.85 to 1.15 ohms between engine connector pin 3 and ECM connector pin A-M1. Check for 12 volts on pin 2 of coil connector. Check fuse #15 (refer to *WIRING DIAGRAM*) Refer to the *SHOP MANUAL* for more details.

P-CODE	MODULE	DESCRIPTION	CAUSE	ACTION
P0512	ECM	Starter power stage detects high current	Damaged solenoid, damaged circuit wires, damaged connector or damaged ECM.	Verify fuse #16 (5 AMP). Check for 12 volts on pin 2 of the starter relay. Refer to the *SHOP MANUAL* for more details.
P0513	ECM	Invalid D.E.S.S. Key detected	Key not programmed in ECU.	Program a good key.
P0520	ECM	Oil pressure switch functional problem	Engine leak, oil pump failure, damaged sensor, damaged circuit wires, damaged connector or damaged ECM pins.	Check resistance at 0 RPM and above 3500 RPM. Switch is normally closed, ECM connector pin A-E3. Refer to the *SHOP MANUAL* for more details.
P0523	ECM	Oil pressure sensor fault	Engine leak, oil pump failure, damaged sensor, damaged circuit wires, damaged connector or damaged ECM pins. Fault detected when the engine is running or stopped.	Check resistance at 0 RPM and above 3500 RPM. Refer to the *SHOP MANUAL* for more details.
P0524	ECM	Low oil pressure condition	Low oil level, engine leak, oil pump fault.	Check oil level. Check impedance of sensor. Refer to the *SHOP MANUAL* for more details.
P0544	ECM	Exhaust gas temperature sensor functional problem	Damaged sensor, damaged circuit wires, damaged connector or damaged ECM output pins.	Check for approximately 2280 to 2736 ohms at temperature of 19 to 21°C (66 to 70°F) between system circuits A-H4 and A-J4. Refer to the *SHOP MANUAL* for more details.
P0545	ECM	Exhaust gas temperature sensor shorted to ground	Damaged sensor, damaged circuit wires, damaged connector or damaged ECM output pins.	Check for approximately 2280 to 2736 ohms at temperature of 19 to 21°C (66 to 70°F) between system circuits A-H4 and A-J4. Refer to the *SHOP MANUAL* for more details.
P0546	ECM	Exhaust gas temperature sensor open circuit or shorted to battery	Damaged sensor, damaged circuit wires, damaged connector or damaged ECM output pins.	Check for approximately 2280 to 2736 ohms at temperature of 19 to 21°C (66 to 70°F) between system circuits A-H4 and A-J4. Refer to the *SHOP MANUAL* for more details.
P0560	ECM	Battery voltage not plausible	Battery failure, rectifier failure, damaged circuit wires, battery terminal connection, damaged AC generator or damaged connectors.	Check fuses #6 (refer to *WIRING DIAGRAM*). Check ground continuity to the engine block. Refer to the *SHOP MANUAL* for more details.
P0562	ECM	Battery voltage too low	Battery failure, rectifier failure, damaged circuit wires, battery terminal connection, damaged AC generator or damaged connectors.	Check fuses #6 (refer to *WIRING DIAGRAM*). Check ground continuity to the engine block. Refer to the *SHOP MANUAL* for more details.

P-CODE	MODULE	DESCRIPTION	CAUSE	ACTION
P0563	ECM	Battery voltage too high	Battery failure, rectifier failure or battery terminal connection.	Check for regulator-rectifier failure. Refer to the *SHOP MANUAL* for more details.
P0564	CLUSTER	Cruise switch fault	The cruise switch is shorted or activated more than 60 seconds.	Verify the cruise switch if it is normally open and close when activated.
P0606	ECM	ECM ADC fault	Damaged ECM.	Replace ECM.
P060D	ECM	TAS (Throttle Accelerator Sensor) synchronization error	Damaged sensor, damaged circuit wires, damaged connector or damaged ECM pins.	Check system circuits B-E1, B-K1, B-K3, B-A3, B-B3, B-J3. Check for 0 volt on sensor connector pin B & E. Check for 5 volts on sensor connector pin A & D. The 5 volt supply is shared between the TAS signal 1, TOPS and MAPS. Verify all three sensor if one is pulling too much current. Check for 0.5 to 3 volts on sensor connector pin F and 0.25 to 1.5 on C. Refer to the *SHOP MANUAL* for more details.
P060E	ECM	Throttle Actuator - Controller Fault - digital position control exceeds limit		
P0610	ECM	Variant coding fault		
P0629	CLUSTER	Fuel sensor disconnected fault	Damaged sensor, damaged circuit wires, damaged connector or damaged ECM output pins.	Check for 2.6 ohms (full tank) to 93.6 ohms (empty tank) between pin C and pin D at the fuel pump connector. Check system circuit at the gauge Pin 19 and 20 (refer to *WIRING DIAGRAM*)
P062F	ECM	ECM EEPROM fault - exchange ECM	Damaged ECM.	Replace ECM.
P06B6	ECM	ECM Fast ADC fault (knock detection line)		
P1030	ECM	Heater Power Stage fault for lambda sensor upstreams of catalyst - open line		
P1106	ECM	Altitude correction factor (fho) not plausible - out of range		
P1120	ECM	Throttle positions calculated from TPS 1 and TPS 2 not corresponding	Damaged throttle actuator, damaged circuit wires, damaged connector or damaged ECM.	Check system circuit, perform closed throttle with B.U.D.S. Replace throttle actuator, replace ECM.

P-CODE	MODULE	DESCRIPTION	CAUSE	ACTION
P1130	ECM	Lambda Sensor fault upstreams of catalyst - open line		
P1171	ECM	Additive mixture adaptation exceeds upper limit --> mixture too lean		An open signal on the Engine coolant temperature (CTS) can trigger that fault.
P1172	ECM	Additive mixture adaptation below lower limit --> mixture too rich		An open signal on the Engine coolant temperature (CTS) can trigger that fault.
P1502	ECM	T.O.P.S. functional problem	Boat or sensor upside down, damaged circuit wires, damaged connector or damaged ECM output pins.	Check continuity for circuits A-C4, A-G1, A-F4. The 5 volt supply is shared between the TAS signal 1, TOPS and MAPS. Verify all three sensor if one is pulling too much current. Refer to the *SHOP MANUAL* for more details.
P1503	ECM	T.O.P.S. switch short circuit to 12V	Boat or sensor upside down, damaged circuit wires, damaged connector or damaged ECM output pins.	Check continuity for circuits A-C4, A-G1, A-F4. The 5 volt supply is shared between the TAS signal 1, TOPS and MAPS. Verify all three sensor if one is pulling too much current. Refer to the *SHOP MANUAL* for more details.
P1504	ECM	T.O.P.S. switch short circuit ground	Boat or sensor upside down, damaged circuit wires, damaged connector or damaged ECM output pins.	Check continuity for circuits A-C4, A-G1, A-F4. The 5 volt supply is shared between the TAS signal 1, TOPS and MAPS. Verify all three sensor if one is pulling too much current. Refer to the *SHOP MANUAL* for more details.
P1505	ECM	T.O.P.S. switch fault non plausible state	Boat or sensor upside down, damaged circuit wires, damaged connector or damaged ECM output pins. Open circuit.	Check continuity for circuits A-C4, A-G1, A-F4. The 5 volt supply is shared between the TAS signal 1, TOPS and MAPS. Verify all three sensor if one is pulling too much current. Refer to the *SHOP MANUAL* for more details.

P-CODE	MODULE	DESCRIPTION	CAUSE	ACTION
P1506	ECM	T.O.P.S. switch open circuit	Boat or sensor upside down, damaged circuit wires, damaged connector or damaged ECM output pins. Open circuit.	Check continuity for circuits A-C4, A-G1, A-F4. The 5 volt supply is shared between the TAS signal 1, TOPS and MAPS. Verify all three sensor if one is pulling too much current. Refer to the *SHOP MANUAL* for more details.
P1550	ECM	OTAS sensor voltage not plausible	Damaged sensor, damaged circuit wires, damaged connector or damaged ECM. Open circuit.	Check continuity for circuits B-H3, B-H1 and fuse #12. Refer to the *SHOP MANUAL* for more details.
P1606	ECM	ECM ADC fault - exchange ECM	Damaged ECM.	No service action available for fault P1606.
P160E	ECM	Throttle Actuator - Controller Fault - digital position control below limit	Damaged throttle actuator, damaged circuit wires, damaged connector or damaged ECM.	Check system circuit, perform closed throttle with B.U.D.S. Replace throttle actuator, replace ECM.
P1610	ECM	Throttle Actuator - Power Stage fault	Damaged throttle actuator, damaged circuit wires, damaged connector or damaged ECM.	Check system circuit, perform closed throttle with B.U.D.S. Replace throttle actuator, replace ECM.
P1611	ECM	Throttle Actuator - Power Stage fault	Damaged throttle actuator, damaged circuit wires, damaged connector or damaged ECM.	Check system circuit, perform closed throttle with B.U.D.S. Replace throttle actuator, replace ECM.
P1612	ECM	Throttle Actuator - Power Stage fault	Damaged throttle actuator, damaged circuit wires, damaged connector or damaged ECM.	Check system circuit, perform closed throttle with B.U.D.S. Replace throttle actuator, replace ECM.
P1613	ECM	Throttle Actuator - Power Stage fault	Damaged throttle actuator, damaged circuit wires, damaged connector or damaged ECM.	Check system circuit, perform closed throttle with B.U.D.S. Replace throttle actuator, replace ECM.
P1614	ECM	Throttle Actuator - Return-Spring check not passed/Spring does not close	Damaged throttle actuator, damaged circuit wires, damaged connector or damaged ECM.	Check system circuit, perform closed throttle with B.U.D.S. Replace throttle actuator, replace ECM.
P1615	ECM	Throttle Actuator - Position monitoring fault	Damaged throttle actuator, damaged circuit wires, damaged connector or damaged ECM.	Check system circuit, perform closed throttle with B.U.D.S. Replace throttle actuator, replace ECM.
P1616	ECM	Throttle Actuator - Default position check or learning fault	Damaged throttle actuator, damaged circuit wires, damaged connector or damaged ECM.	Check system circuit, perform closed throttle with B.U.D.S. Replace throttle actuator, replace ECM.
P1619	ECM	Throttle Actuator - Adaptation of upper mechanical limit failed	Damaged throttle actuator, damaged circuit wires, damaged connector or damaged ECM.	Check system circuit, perform closed throttle with B.U.D.S. Replace throttle actuator, replace ECM.

P-CODE	MODULE	DESCRIPTION	CAUSE	ACTION
P1620	ECM	Throttle Actuator - Adaptation of lower mechanical limit failed	Damaged throttle actuator, damaged circuit wires, damaged connector or damaged ECM.	Check system circuit, perform closed throttle with B.U.D.S. Replace throttle actuator, replace ECM.
P1621	ECM	Throttle Actuator - Abortion of adaptation	Damaged throttle actuator, damaged circuit wires, damaged connector or damaged ECM.	Check system circuit, perform closed throttle with B.U.D.S. Replace throttle actuator, replace ECM.
P1622	ECM	Throttle Actuator - Repeated abortion of adaptation	Damaged throttle actuator, damaged circuit wires, damaged connector or damaged ECM.	Check system circuit, perform closed throttle with B.U.D.S. Replace throttle actuator, replace ECM.
P1654	ECM	Voltage of D.E.S.S. key switch out of range	Damaged D.E.S.S. key switch, damaged circuit wires, damaged connector or damaged ECM output pins.	Remove D.E.S.S. key and check system circuit B-B2. Refer to the *SHOP MANUAL* for more details.
P1657	ECM	Electrical fault of D.E.S.S. key communication line	Damaged D.E.S.S. key switch, damaged circuit wires, damaged connector or damaged ECM output pins.	Remove D.E.S.S. key and check system circuit B-B2. Refer to the *SHOP MANUAL* for more details.
P1658	ECM	Faulty D.E.S.S. key communication	Damaged D.E.S.S. key switch, damaged circuit wires, damaged connector or damaged ECM output pins.	Remove D.E.S.S. key and check system circuit B-B2. Refer to the *SHOP MANUAL* for more details.
P1661	ECM	iBR malfunction	iBR fault detected by ECM.	Remove D.E.S.S. key Perform an electrical system shut down. Clear fault.
P1662	ECM	iBR torque request is not plausible	iBR fault detected by ECM.	Perform iBR software update if available or replace iBR.
P1679	ECM	Main relay sticking	Permanent 12V is present on ECM Pin B-M4.	ECU pin B-M4 is permanently supplied thru 15 amp fuse and it should be accessory 12 Vdc.
P16B6	ECM	ECU Fast ADC fault (knock detection line)		
P16B7	ECM	ECU Fast ADC fault (knock detection line)		
P16B8	ECM	ECU Fast ADC fault (knock detection line)		
P16C0	ECM	Fault of ECM ADC		
P16C1	ECM	Fault of ECM ADC		
P16C2	ECM	Fault of ECM monitoring module		
P16C3	ECM	Monitoring fault due to Accelerator Sensor check		
P16C4	ECM	Monitoring fault due to engine speed check		

P-CODE	MODULE	DESCRIPTION	CAUSE	ACTION
P16C5	ECM	Safety fuel cut off activ - Monitoring level 1		
P16C6	ECM	Safety fuel cut off activ - Monitoring level 2		
P16C7	ECM	Monitoring fault due to throttle valve plausibility check	Damaged throttle actuator, damaged circuit wires, damaged connector or damaged ECM.	Check system circuit, perform closed throttle with B.U.D.S. Replace throttle actuator, replace ECM.
P16C8	ECM	Monitoring fault due to exceeding permitted throttle valve position	Damaged throttle actuator, damaged circuit wires, damaged connector or damaged ECM.	Check system circuit, perform closed throttle with B.U.D.S. Replace throttle actuator, replace ECM.
P16C9	ECM	Monitoring detected non plausible D.E.S.S. key state	Damaged D.E.S.S. key switch, damaged circuit wires, damaged connector or damaged ECM output pins.	Remove D.E.S.S. key and check system circuit B-B2. Refer to the *SHOP MANUAL* for more details.
P16CA	ECM	ECU detected faulty watch dog line ECU defect	Damaged ECM.	Replace ECM.
P16CB	ECM	ECU switch off through watch dog line (hardware fault) ECU defect	Damaged ECM.	Replace ECM.
P2080	ECM	Exhaust temperature not plausible	Damaged sensor, damaged circuit wires, damaged connector or damaged ECM output pins.	Check for approximately 2280 to 2736 ohms at temperature of 19 to 21°C (66 to 70°F) between system circuits A-H4 and A-J4. Refer to the *SHOP MANUAL* for more details.
P2081	ECM	Exhaust temperature sensor fault	Intermittent connection. Damaged sensor, damaged circuit wires, damaged connector or damaged ECM output pins.	Check for approximately 2280 to 2736 ohms at temperature of 19 to 21°C (66 to 70°F) between system circuits A-H4 and A-J4. Refer to the *SHOP MANUAL* for more details.
P212C	ECM	Electrical lower-range violation TPS 2	Damaged throttle actuator, damaged circuit wires, damaged connector or damaged ECM.	Check system circuit, perform closed throttle with B.U.D.S. Replace throttle actuator, replace ECM.
P212D	ECM	Electrical upper-range violation TPS 2	Damaged throttle actuator, damaged circuit wires, damaged connector or damaged ECM.	Check system circuit, perform closed throttle with B.U.D.S. Replace throttle actuator, replace ECM.
P2159	ECM	TAS (Throttle Accelerator Sensor) signal not plausible		
P2279	ECM	Air intake manifold leak downstream of throttle		

P-CODE	MODULE	DESCRIPTION	CAUSE	ACTION
P2428	ECM	High exhaust temperature detected	Exhaust overheat, damaged sensor or damaged circuit wires.	Check cooling system for blockage. Check if the exhaust injection valve is properly calibrated. Refer to the *SHOP MANUAL* for more details.
P2620	ECM	TPS value not plausible	Damaged throttle actuator, damaged circuit wires, damaged connector or damaged ECM.	Check system circuit, perform closed throttle with B.U.D.S. Replace throttle actuator, replace ECM.
P2621	ECM	Electrical lower-range violation TPS 1	Damaged throttle actuator, damaged circuit wires, damaged connector or damaged ECM.	Check system circuit, perform closed throttle with B.U.D.S. Replace throttle actuator, replace ECM.
P2622	ECM	Electrical upper-range violation TPS 1	Damaged throttle actuator, damaged circuit wires, damaged connector or damaged ECM.	Check system circuit, perform closed throttle with B.U.D.S. Replace throttle actuator, replace ECM.
U0129	ECM	CAN communication error between ECM and iBR module	iBR fault detected by ECM. C.A.N. circuit failure, iBR or ECM failure. Disconnected connector.	Check C.A.N. circuits wires. Replace iBR. Refer to the *SHOP MANUAL* for more details.
U0129	IS	IBR CAN messages time-out or validity	Warning only: the iS module lost communication with the iBR.	If fault ACTIVE, verify CAN connection between iBR and iS.
U0300	ECM	Exchange security - Wrong ECM	Incorrect ECM or cluster for engine.	Install proper recommended ECM or cluster for vehicle.
U0401	IBR	ECM CAN messages time-out or validity	C.A.N. circuit failure, ECM software failure.	Check C.A.N. circuits wires. Replace ECM. Refer to the *SHOP MANUAL* for more details.
U0401	IS	ECM CAN messages time-out or validity	Warning only: the iS module lost communication with the engine ECU.	If fault ACTIVE, verify CAN connection between ECM and iS.
U0401	IBR 2013	ECM CAN messages time-out or validity	C.A.N. circuit failure, ECM software failure.	Check C.A.N. circuits wires. Replace ECM. Refer to the *SHOP MANUAL* for more details.
U0457	IBR	Cluster CAN messages time-out or validity	C.A.N. circuit failure, Cluster software failure.	Check C.A.N. circuits wires. Replace instrument Cluster. Refer to the *SHOP MANUAL* for more details.
U0457	IS	Cluster CAN messages time-out or validity	Warning only: the iS module lost communication with the Cluster.	If fault ACTIVE, verify CAN connection between Cluster and iS.
U0457	IBR 2013	Cluster CAN messages timeout or validity	C.A.N. circuit failure, Cluster software failure.	Check C.A.N. circuits wires. Replace instrument Cluster. Refer to the *SHOP MANUAL* for more details.

P-CODE	MODULE	DESCRIPTION	CAUSE	ACTION
U16A1	ECM	Cluster CAN time-out error-Missing CAN ID 514h	Cluster fault detected by ECM. C.A.N. circuit failure, Instrument cluster or ECM failure.	Check C.A.N. circuits wires. Replace instrument Cluster. Refer to the *SHOP MANUAL* for more details.
U16A2	ECM	Cluster CAN time-out error-Missing CAN ID 230h	Cluster fault detected by ECM. C.A.N. circuit failure, Instrument cluster or ECM failure.	Check C.A.N. circuits wires. Replace instrument Cluster. Refer to the *SHOP MANUAL* for more details.
U16A3	ECM	Cluster CAN time-out error-Missing CAN ID 408h	Cluster fault detected by ECM. C.A.N. circuit failure, Instrument cluster or ECM failure.	Check C.A.N. circuits wires. Replace instrument Cluster. Refer to the *SHOP MANUAL* for more details.
U16A4	ECM	iBR CAN time-out error-Missing CAN ID 010h	iBR fault detected by ECM. C.A.N. circuit failure, iBR or ECM failure. Disconnected connector.	Check C.A.N. circuits wires. Replace iBR. Refer to the *SHOP MANUAL* for more details.
U16A5	ECM	iBR CAN time-out error-Missing CAN ID 012h	iBR fault detected by ECM. C.A.N. circuit failure, iBR or ECM failure. Disconnected connector.	Check C.A.N. circuits wires. Replace instrument iBR. Refer to the *SHOP MANUAL* for more details.
U16A6	ECM	Cluster check sum error - CAN ID230h	Cluster fault detected by ECM. C.A.N. circuit failure, Instrument cluster or ECM failure.	Check C.A.N. circuits wires. Replace instrument Cluster. Refer to the *SHOP MANUAL* for more details.
U16A7	ECM	Cluster check sum error - CAN ID408h	Cluster fault detected by ECM. C.A.N. circuit failure, Instrument cluster or ECM failure.	Check C.A.N. circuits wires. Replace instrument Cluster. Refer to the *SHOP MANUAL* for more details.
U16A8	ECM	iBR check sum error - CAN ID010h	iBR fault detected by ECM. C.A.N. circuit failure, ECM software failure.	Check C.A.N. circuits wires. Replace iBR. Refer to the *SHOP MANUAL* for more details.
U16A9	ECM	iBR check sum error - CAN ID012h	iBR fault detected by ECM. C.A.N. circuit failure, ECM software failure.	Check C.A.N. circuits wires. Replace iBR. Refer to the *SHOP MANUAL* for more details.
U16AA	ECM	Cluster CAN time-out error-Missing CAN ID 410h		
U16AB	ECM	Cluster check sum error - CAN ID410h		

POWER DISTRIBUTION AND GROUNDS

GENERAL

POWER DISTRIBUTION DIAGRAM

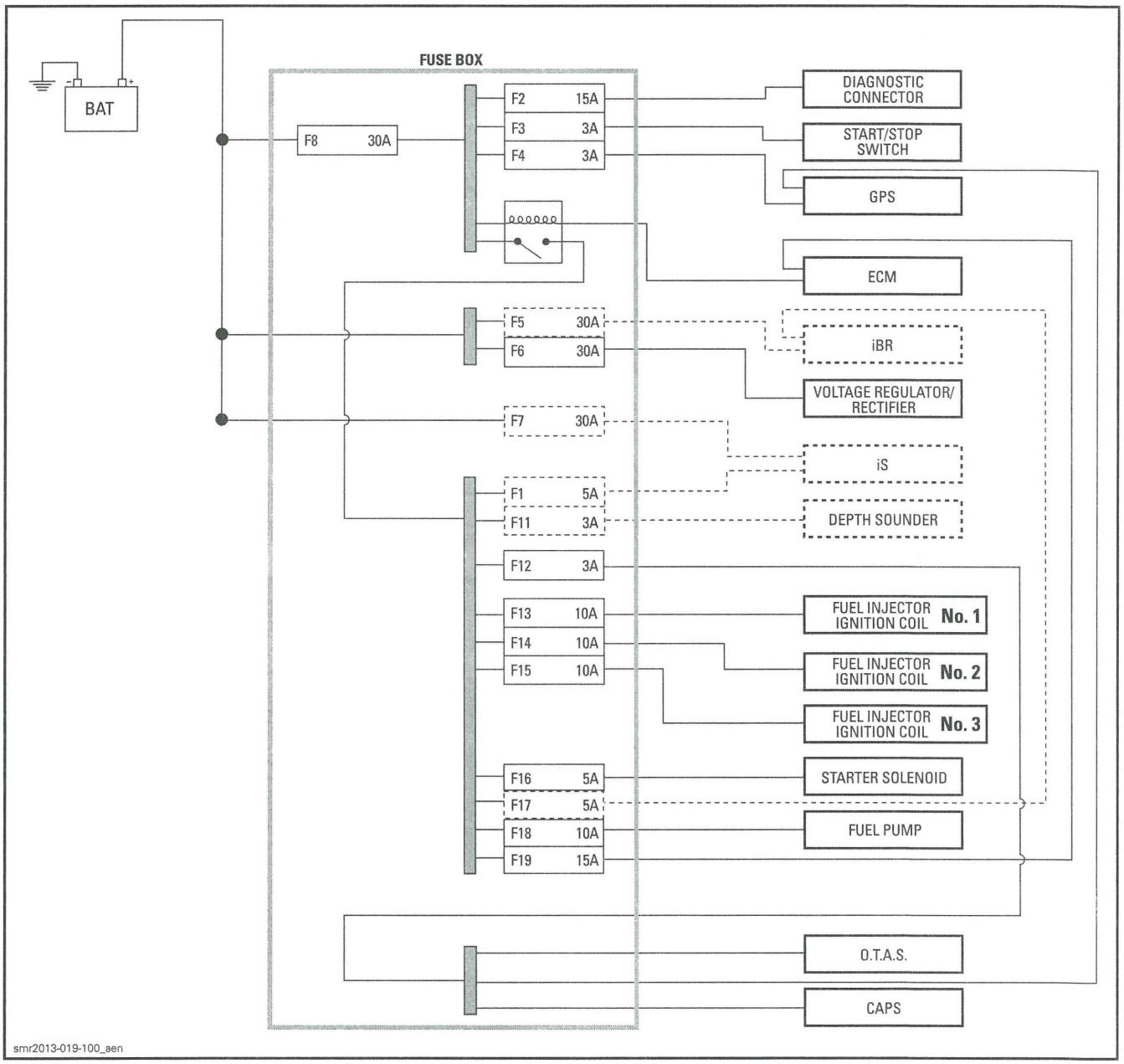

NOTE: Component shown in doted lines are not offered on all models.

ACRONYM DESCRIPTION	
CAPS: Camshaft position sensor	iS: Intelligent suspension
ECM: Engine control module	O.T.A.S.: Off throttle assisted steering
iBR: Intelligent brake and reverse	

FUSE BOX

Fuse Box Location (GTS, GTI, GTR, Wake and RXP Series)

To access the fuse box, open the front storage cover an remove the access panel.

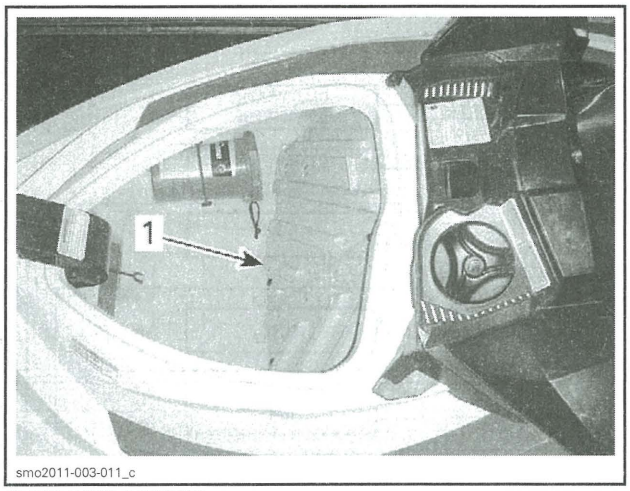

FUSE BOX ACCESS
1. *Access panel*

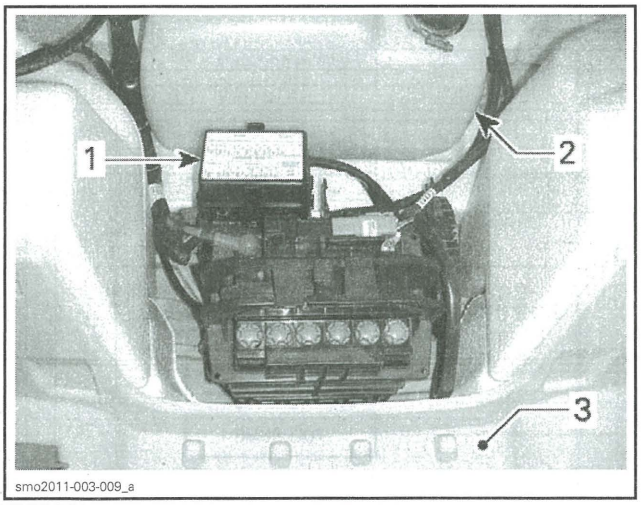

TYPICAL
1. *Fuse box*
2. *Fuel tank*
3. *Front storage compartment (access panel removed)*

Fuse Box Location (RXT, GTX and Wake Pro Series)

Models with Suspension

To access the fuse box, open the boarding platform and remove the RH storage bin.

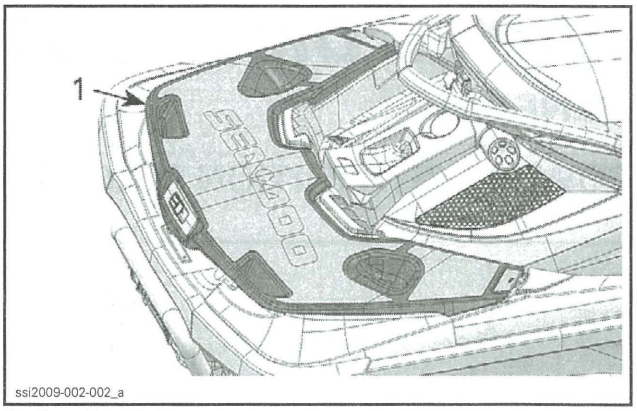

1. *Boarding platform*

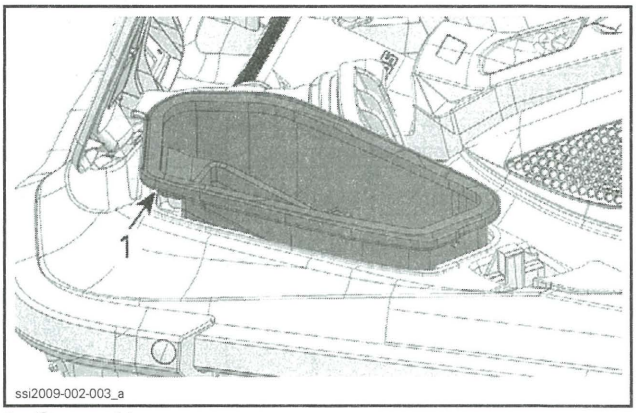

1. *Storage bin*

Models Without Suspension

To access the fuse box, open the starboard access panel on the rear deck.

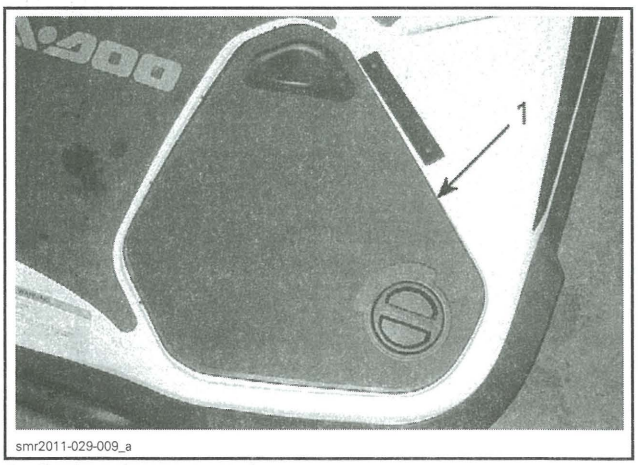

1. *Starboard access panel*

Fuse Identification

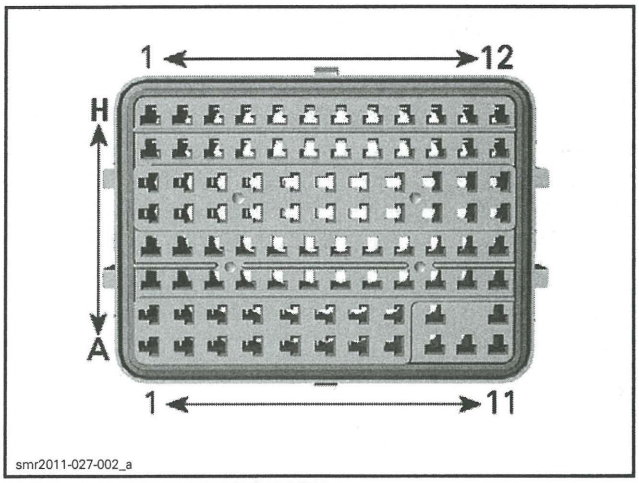

FUSE BOX PIN IDENTIFICATION

NOTE: This fuse box has rows of 11 or 12 cavities. See table below for details.

NUMBER OF CAVITIES BY ROW	
ROW	NUMBER OF CAVITIES
A-B	11
C-D	12
E-F	11
G-H	12

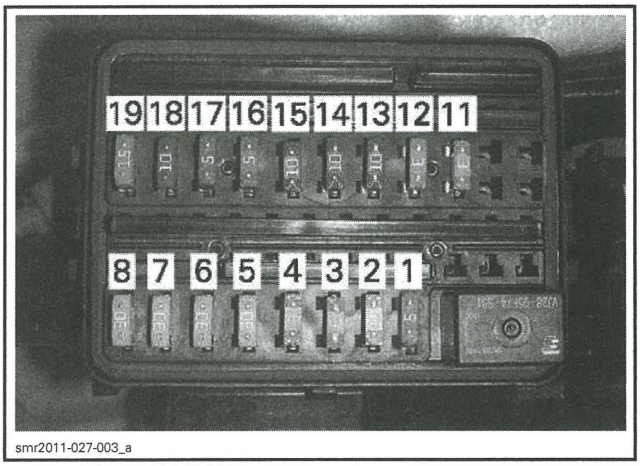

FUSE IDENTIFICATION

NO.	DESCRIPTION	
F1	**Through relay:** – iS control [1]	5 A
F2	**Direct power (through F8):** – Diagnostic connector	15 A
F3	**Direct power (through F8):** – START/STOP	3 A
F4	**Direct power (through F8):** – GPS [2]	3 A
F5	**Direct power:** – iBR power [1]	30 A
F6	**Direct power:** – Voltage regulator/rectifier	30 A
F7	**Direct power:** – iS power	30 A
F8	– F2 – F3 – F4 – Relay	30 A
F11	**Through relay:** – Depth sounder [1]	3 A
F12	**Through relay:** – O.T.A.S. – Gauge start up – CAPS	3 A
F13	**Through relay:** – Fuel injector cyl. 1 – Ignition coil cyl. 1	10 A
F14	**Through relay:** – Fuel injector cyl. 2 – Ignition coil cyl. 2	10 A
F15	**Through relay:** – Fuel injector cyl. 3 – Ignition coil cyl. 3	10 A
F16	**Through relay:** – Starter solenoid	5 A
F17	**Through relay:** – iBR control [1]	5 A
F18	**Through relay:** – Fuel pump	10 A
F19	**Through relay:** – ECM power	15 A

Note 1: Except GTS models.

Note 2: If so equipped.

RELAY

Relay Pin Identification

The relay is in the fuse box. Refer to *FUSE BOX LOCATION*.

RELAY PIN IDENTIFICATION		
FUNCTION	FUSE BOX PIN	CONDITION
12-volt input at winding	B9	Direct battery power from fuse F8
Control	A11	Grounded by ECM B pin H2 **once START/STOP is depressed**
12-volt input at contacts	A9	Direct battery power from fuse F8
12-volt output	B11	-

GROUNDS

Ground Location

All the ground terminals are located on the front of engine.

There is no splice in the ground wiring, the interconnections are made through a bus bar in the fuse box.

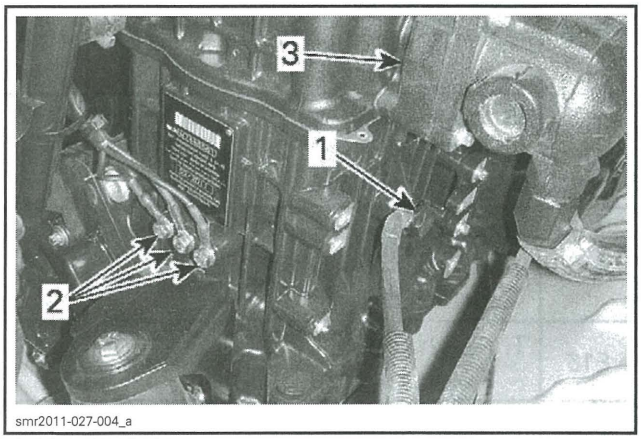

FRONT OF ENGINE
1. *Battery ground*
2. *Electrical components grounds*
3. *Exhaust manifold*

INFORMATION CENTER (GAUGE)

SERVICE TOOLS

Description	Part Number	Page
DIAGNOSTIC HARNESS	529 036 188	128, 131–132
FLUKE 115 MULTIMETER	529 035 868	127, 129, 131, 133, 137

SERVICE PRODUCTS

Description	Part Number	Page
DIELECTRIC GREASE	293 550 004	122, 135, 139

GENERAL

INFORMATION CENTER (GAUGE) (GTS)

⚠ WARNING

Do not adjust the display while riding, you could lose control.

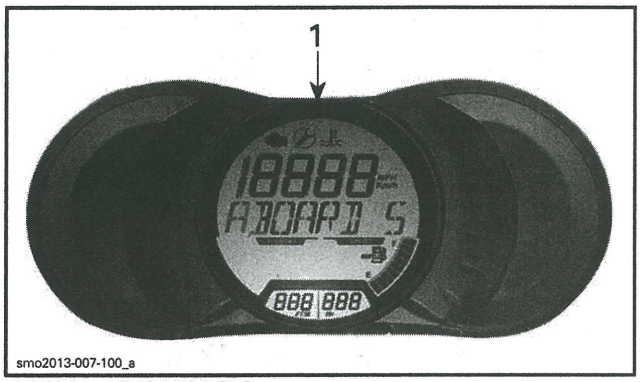

TYPICAL - GTS MODELS
1. Multifunction gauge

Multifunction Gauge Description

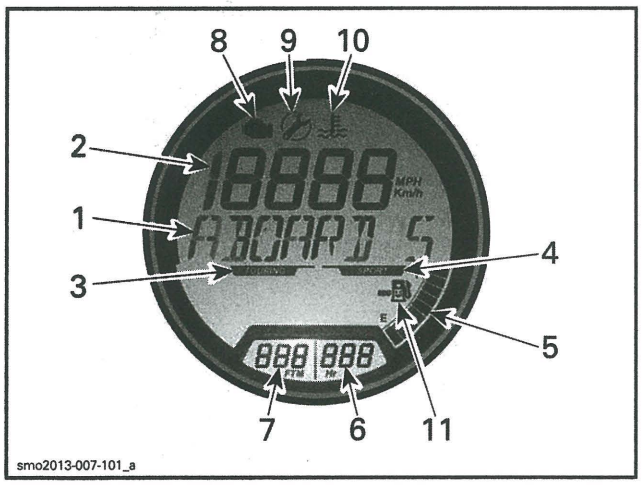

1) Multifunction Display

The multifunction display is used to:
- Display the WELCOME message on power up
- Display the KEY recognition message
- Display the engine RPM
- Display fault messages.

NOTE: If a fault occurs, it will periodically scroll the applicable fault message in the display and revert to the RPM indication depending on the severity of the fault detected.

2) Numerical Display

The numerical display provides an indication of estimated watercraft speed.

3) Touring Mode Indicator

When the TOURING mode indicator is ON, the default TOURING mode is active.

Refer to *OPERATING MODES* subsection for details.

4) Sport Mode Indicator

The SPORT mode indicator is normally off.

When sport mode of operation is selected, the SPORT mode indicator will come on and stay on until sport mode is deactivated, or the watercraft is shut down.

NOTE: Sport mode is not the default riding mode. To be active, it must be selected on after starting the engine.

Refer to *OPERATING MODES* subsection for detailed instructions.

5) Fuel Level Indication

A bar gauge located in the bottom RH side of the multifunction display continuously indicates the amount of fuel in the fuel tank while riding.

When the fuel tank is full, 8 segments (bars) of the indicator are turned on. The top segment is not used.

When there is only 2 segments of fuel indicated (approximately 25% fuel tank capacity or 14 L (3.7 U.S. gal.), the following indications will come ON to advise you that a low fuel condition exists.

LOW FUEL LEVEL INDICATIONS	
Last 2 fuel gauge segments	Flashing
Fuel tank symbol	
Audible advisory (one long beep)	Periodically
Scrolling LOW FUEL advisory message	

6) Hour Meter Display

Continuously displays the accumulated engine hours.

7) Water Depth Display

The water depth display provides an indication of the lake water depth.

The system is capable of indicating water depth under the hull in single increments up to 50 m (164 ft).

NOTE: Under certain conditions, the display may stop indicating. The display's ability to provide an indication of the waters's depth depends on the conditions of use.

NOTE: The water depth indication is only available when a depth sounder is installed and detected.

⚠ WARNING

Never use the depth sounder as a warning device to ride in shallow water.

8) Check Engine Light

The check engine light comes ON when a fault is detected by the engine management system.

The check engine light may be accompanied by the applicable scrolling fault message in the multifunction display.

When the check engine light comes on, contact your authorized Sea-Doo dealer.

9) Maintenance Reminder Indicator

The maintenance reminder indicator comes ON when required maintenance is due.

When this indicator comes on, bring your watercraft to your authorized Sea-Doo dealer to have it serviced and to have the maintenance reminder indicator reset.

10) High Temperature Indicator

The high temperature indicator comes ON when a high engine temperature or a high exhaust system temperature is detected. Refer to *TROUBLESHOOTING* section.

11) ECO Indicator

The ECO indicator and a smile in the fuel tank symbol comes ON when **FUEL ECONOMY MODE** is activated.

Refer to *OPERATING MODES* subsection for detailed instructions.

INFORMATION CENTER (GAUGES) (GTI/GTR/WAKE)

⚠ WARNING

Do not adjust the display while riding, you could lose control.

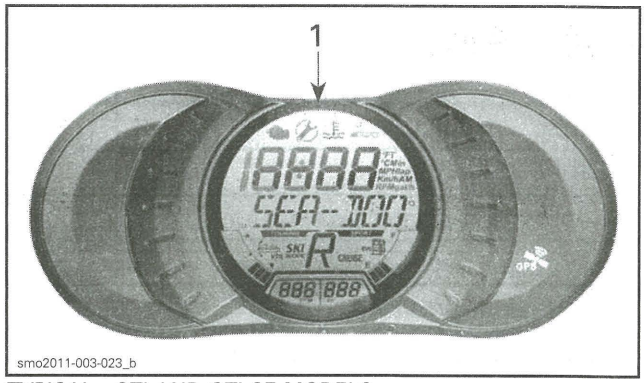

TYPICAL - GTI AND GTI SE MODELS
1. *Multifunction gauge*

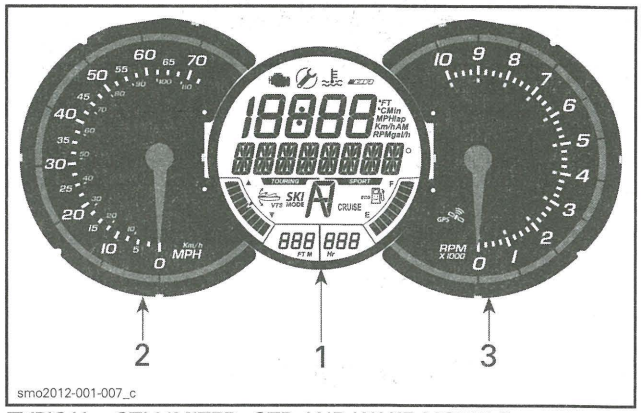

TYPICAL - GTI LIMITED, GTR AND WAKE MODELS
1. *Multifunction gauge*
2. *Analog speedometer*
3. *Analog tachometer*

Analog Speedometer Description

The speedometer, located in the LH side of the information center, provides an analog indication of the speed of the watercraft in miles per hour (MPH) and kilometers per hour (km/h).

The speed indication is based on a GPS (Global Positioning System) incorporated within the information center.

If for some reason the GPS signal is lost, a default mode is used whereby, the speed is calculated using information received from other systems to provide an estimated watercraft speed.

Analog Tachometer Description

The tachometer provides an analog indication of the revolutions per minute (RPM) of the engine. Multiply the indicated number by 1000 to obtain the actual engine RPM.

Multifunction Gauge Features

	GTI	GTI SE	GTI LIMITED	GTR	WAKE
Touring mode indicator	X	X	X	X	X
Sport mode indicator	X	X	X	X	X
Fuel level indication	X	X	X	X	X
Hour meter display	X	X	X	X	X
Water depth indication	Opt	Opt	Opt	Opt	Opt
ECO mode indicator	X	X	X	X	X
CRUISE mode indicator	Opt	Opt	X	Opt	X
iBR position indicator	X	X	X	X	X
SKI mode indicator	Opt	Opt	Opt	Opt	X
VTS position indication	Opt	X	X	X	X

X = Indicates a **standard** feature
Opt = Indicates a feature available as an **option**

Multifunction Gauge Description

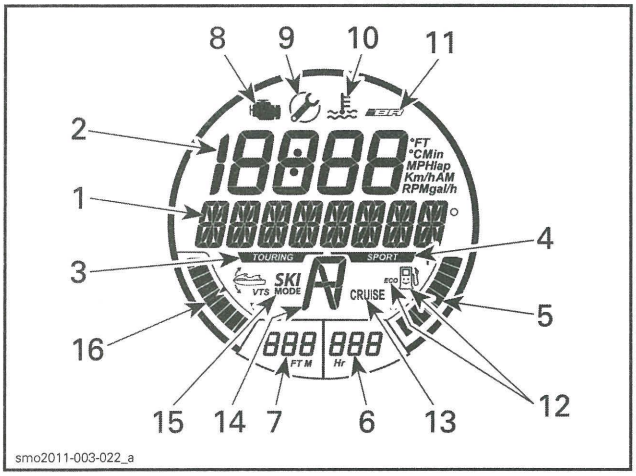

smo2011-003-022_a

1) Multifunction Display

The multifunction display is used to:

- Display the WELCOME message on power up
- Display the KEY recognition message
- Provide various indications as selected by the operator
- Activating or changing various functions or modes of operation
- Display scrolling messages of function activation or system faults
- Display fault codes.

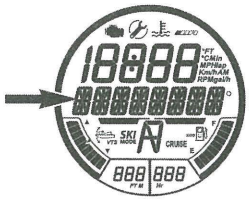

MULTIFUNCTION DISPLAY

NOTE: The default indication in the multifunction display is the compass direction.

2) Numerical Display

The numerical display is used to provide a variety of indications as selected by the operator using the DISPLAY function in the multifunction display.

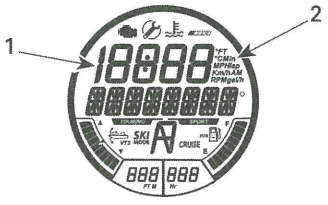

NUMERICAL DISPLAY

1. Numerical display indication
2. Unit of measurement of indication

AVAILABLE INDICATIONS IN NUMERICAL DISPLAY					
	GTI	GTI SE	GTI Limited	GTR	WAKE
Watercraft speed	Indication by default				
Engine RPM	X	X	X	X	X
Engine temperature	Opt	Opt	Opt	Opt	Opt
Clock	N.A.	X	X	X	X
Learning key settings	X	X	X	X	X
CRUISE SPEED setting	Opt	Opt	X	Opt	X
SLOW SPEED MODE setting	Opt	Opt	X	Opt	X
VTS preset	Opt	Opt	X	Opt	Opt
VTS settings	Opt	X	N.A.	X	X
SKI MODE settings	Opt	Opt	Opt	Opt	X
Fuel consumption (instant and average)	Opt	X	X	X	X
Fuel autonomy (distance and time to empty)	Opt	Opt	X	Opt	Opt
Lap timer	Opt	Opt	Opt	Opt	Opt
Top speed/RPM Average speed/RPM	Opt	Opt	Opt	Opt	Opt
Altitude	N.A.	N.A.	X	N.A.	N.A.
X = An X indicates a **standard** feature Opt = Feature available as an **option** N.A. = Not Available					

When the information center is first powered up, the numerical display defaults to the last selected indication.

3) Touring Mode Indicator

When the TOURING mode indicator is ON, the default TOURING mode of operation is active.

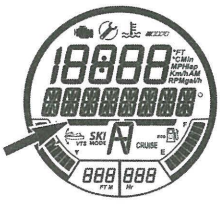

TOURING MODE INDICATOR

Refer to *OPERATING MODES* subsection for detailed instructions.

4) Sport Mode Indicator

The sport mode indicator is normally off.

When sport mode of operation is selected, the SPORT mode indicator will come on and stay on until sport mode is deactivated, or the watercraft is shut down.

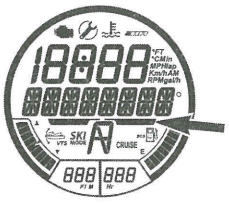

SPORT MODE INDICATOR

NOTE: Sport mode is not the default riding mode. To be active, it must be selected after starting the engine.

Refer to *OPERATING MODES* subsection for detailed instructions.

5) Fuel Level Indication

A bar gauge located in the bottom RH side of the multifunction display continuously indicates the amount of fuel in the fuel tank while riding.

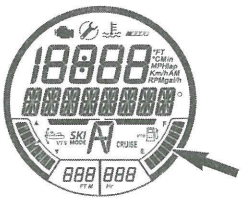

FUEL LEVEL INDICATION

When the fuel tank is full, 8 segments (bars) of the indicator are turned on. The top segment is not used.

When there is only 2 segments of fuel indicated (approximately 25% fuel tank capacity or 14 L (3.7 U.S. gal.), the following warnings will be ON.

LOW FUEL LEVEL WARNING	
Last 2 fuel gauge segments	Flashing
Fuel tank symbol	
Audible warning (one long beep)	Periodically
Scrolling LOW FUEL WARNING message	

6) Hour Meter Display (HR)

Continuously displays the accumulated engine hours.

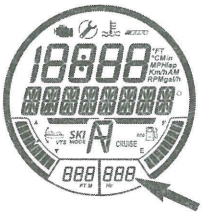

HOUR METER DISPLAY

7) Water Depth Display

The water depth display provides an indication of the lake water depth.

The system is capable of indicating water depth under the hull in single increments up to 50 m (164 ft).

NOTE: Under certain conditions, the display may stop indicating. The display's ability to provide and indication of the water's depth depends on the conditions of use.

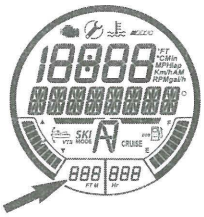

WATER DEPTH DISPLAY

NOTE: The water depth indication is only available when a depth sounder is installed and detected.

⚠ WARNING

Never use the depth sounder as a warning device to ride in shallow water.

8) Check Engine Light

The check engine light comes ON when a fault is detected by the engine management system.

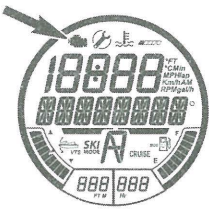

CHECK ENGINE LIGHT

When the check engine light comes on, contact your authorized Sea-Doo dealer.

9) Maintenance Reminder Indicator

The maintenance reminder indicator comes ON when required maintenance is due.

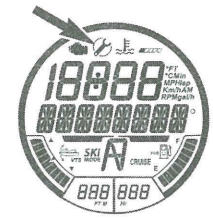

MAINTENANCE REMINDER INDICATOR

When this indicator comes on, bring your watercraft to your authorized Sea-Doo dealer to have it serviced and to have the maintenance reminder indicator reset.

10) High Temperature Indicator

The high temperature indicator comes ON when a high engine temperature or a high exhaust system temperature is detected.



HIGH TEMPERATURE INDICATOR

Refer to *TROUBLESHOOTING* subsection for details.

11) iBR Fault Indicator

The iBR fault indicator comes ON when a fault in the iBR system has been detected.

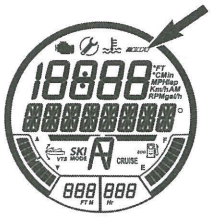

iBR FAULT INDICATOR

Refer to *TROUBLESHOOTING* subsection for details.

12) ECO Indicator

The ECO indicator and a smile in the fuel tank symbol comes ON when **FUEL ECONOMY MODE** is activated.

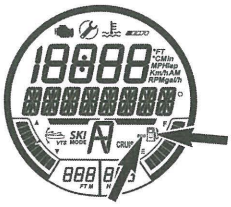

ECO MODE INDICATOR
(Fuel Economy Mode)

Refer to *OPERATING MODES* subsection for detailed instructions.

13) CRUISE Mode Indicator

The cruise mode indicator comes ON when:
- CRUISE MODE has been activated.
- SLOW SPEED MODE has been activated.

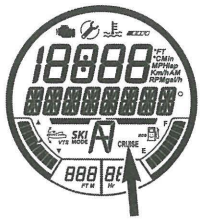

CRUISE MODE INDICATOR

Refer to *OPERATING MODES* subsection for detailed instructions.

14) iBR Position Indicator

Provides an indication of the iBR gate position.
- N (neutral)
- F (forward)
- R (reverse).

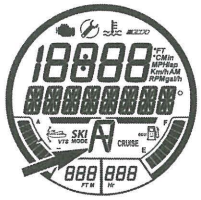

iBR POSITION INDICATOR

15) SKI MODE Indicator

The ski mode indicator is ON when SKI MODE is active.



SKI MODE INDICATOR

Refer to *OPERATING MODES* subsection for detailed instructions.

16) VTS Position Indication

The VTS position indication provides an indication of the pump nozzle position.

A single segment of a bar gauge type indicator is turned on to indicate the relative position of the watercraft bow.

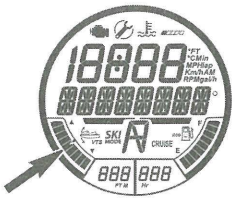

VTS POSITION INDICATION

Refer to *OPERATING INSTRUCTIONS* subsection for detailed instructions.

Navigating the Multifunction Display

⚠ WARNING

Do not adjust display while riding, you could lose control.

Selecting Functions

When operating at speed, the multifunction display provides an indication of the compass direction and azimuth of the watercraft is traveling by default.

1. To select the various functions available through the multifunction display, press the MODE button repeatedly until the desired function is visible:
   - LAP TIMER
   - SKI MODE
   - FUEL ECONOMY MODE
   - FUEL CONSUMPTION
   - VTS MODE
   - DISPLAY
   - FAULT CODES
   - KEY MODE
   - SETTINGS.

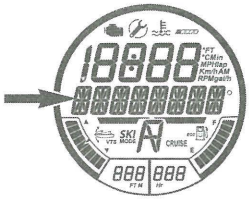

FUNCTION SUBMENU DISPLAYED IN SEQUENCE WHEN MODE BUTTON PRESSED REPEATEDLY

2. Then press the SET button to enter that function.

NOTE: The available functions and the order in which they appear depends on the watercraft model. The fault code function is only available when there is an active fault. The settings function is only available when the engine is shut off. The key mode function is only available with a normal key.

Function Description

Compass

A GPS incorporated in the information center provides the indication in the multifunction display.

The cardinal points, intermediate cardinal points, as well as the azimuth the watercraft is travelling are displayed in the multifunction display by default when the watercraft is moving.

For a compass indication to be displayed, the GPS must have a good link with the navigation satellites.

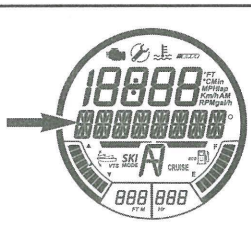

COMPASS DIRECTION DISPLAYED

NOTE: The compass indication is only available above 5 km/h (3 MPH).

⚠ WARNING

Use the compass as a guide only. Not to be used for precision navigation purposes.

Lap Timer

The lap timer can be used to record up to 50 individual lap times.

To activate and use the lap timer, carry out the following:

1. Press the MODE button repeatedly until LAP TIME is visible in the multifunction display.

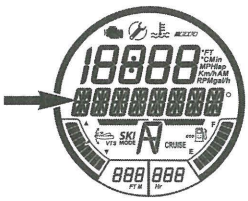

MESSAGE DISPLAYED

LAP TIME

2. Press the SET button to enter the function, the lap timer will be activated and visible in the display.

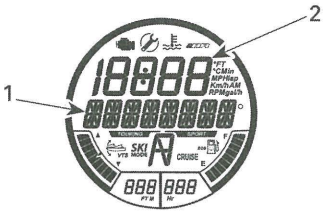

LAP TIMER FUNCTION

1. 00'00'00 lap time displayed here
2. Lap number "0" displayed here

3. To start the timer, press the SET button.

NOTE: The timer starts immediately when pressing the SET button.

4. To record each lap time, press the SET button at the start of each lap.

NOTE: The lap time will be recorded, the lap counter in the numerical display will count the number of laps recorded, and the timer will continue to run.

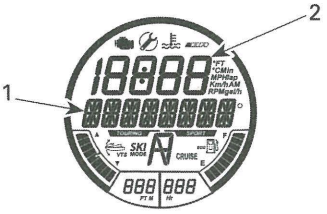

LAP TIMER FUNCTION EXAMPLE

1. 01'02'34 lap time displayed here
2. Lap number "1" displayed here

5. To save the last lap and stop the timer, press the MODE button.

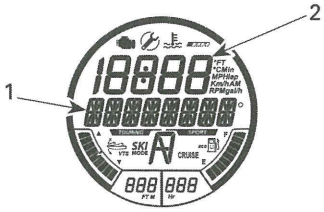

LAP TIMER FUNCTION EXAMPLE

1. 01'21'03 lap time displayed here
2. Lap number "2" displayed here

To view each lap time, use the UP/DOWN button. The lap counter will indicate which lap is indicated.

To view the cumulative lap time of all laps recorded, use the UP/DOWN button until ALL is visible in the lap counter.

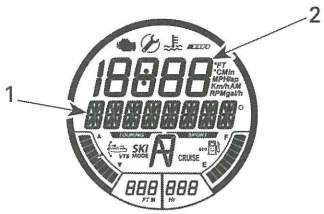

LAP TIMER FUNCTION EXAMPLE

1. Total lap times 02'23'37 displayed here
2. Lap count "ALL" displayed here

To reset the lap timer and lap counter, press and hold the SET button until the timer and counter are reset to 0 (zero).

Ski Mode

Ski mode is used for repeated controlled launches when towing a skier or wakeboarder. Refer to *OPERATING MODES* for more details.

ECO Mode

ECO mode is a function by which engine fuel consumption is reduced. Refer to *OPERATING MODES* subsection for detailed instructions.

Fuel Consumption

The FUEL CONSUMPTION function is used to display the watercraft fuel consumption four different ways:

- Instant fuel flow per hour (gal/h or L/h)
- Average fuel flow per hour (gal/h or L/h)
- Distance to empty (Mi or Km)
- Time to empty (h or min).

The fuel consumption functions are not continuously active.

The fuel consumption function selected becomes active only when selected as the indication in the numerical display.

When the LOW FUEL indications come on in the multifunction gauge, the "TIME TO EMPTY" and "DISTANCE TO EMPTY" functions will indicate "0" (zero) if they are the selected indication.

To display the watercraft fuel consumption, carry out the following:

1. Press the MODE button repeatedly until FUEL CONSUMPTION is visible in the multifunction display.

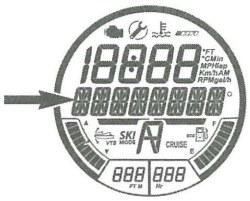

MESSAGE DISPLAYED
FUEL CONSUMPTION

2. Press the UP/DOWN button to toggle to the desired fuel consumption display mode.

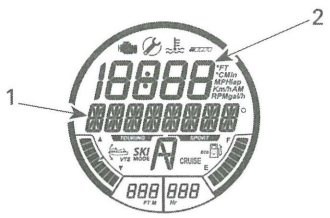

FUEL CONSUMPTION DISPLAY MODE
1. INSTANT FUEL CONSUMPTION message 2. Applicable value

3. Press the SET button to save the setting and return to the main display.

NOTE: The fuel consumption value selected will be displayed in the numerical display. Double click the SET button to reset the average fuel consumption indication. The display will momentarily indicate zero (0).

VTS Mode

The VTS MODE function is used to manually set the VTS or change VTS PRESET settings.

Refer to *OPERATING INSTRUCTIONS* subsection for detailed instructions.

Display

The DISPLAY function is used to change the indication in the numerical display. Refer to *CHANGING NUMERICAL DISPLAY INDICATION*.

Fault Codes

The FAULT CODES function is used to display active fault codes.

Refer to *MONITORING SYSTEM* subsection for details.

Key Mode

The KEY MODE function is used for changing LEARNING key settings.

Refer to *OPERATING MODES* subsection for detailed instructions.

Settings

The SETTINGS function is used for:

- Changing the clock setting, refer to *MULTIFUNCTION GAUGE SETUP*.
- Activating the iBR override function, refer to *SPECIAL PROCEDURES*.

Multifunction Display Messages

For a list of usual messages that may be displayed in the multifunction display, refer to *MULTIFUNCTION DISPLAY MESSAGES* in this section.

Changing Numerical Display Indication

To change the indication in the numerical display, carry out the following:

1. Press the MODE button on the RH handlebar repeatedly until DISPLAY is visible in the multifunction display.

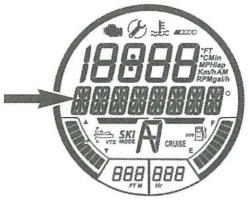

MESSAGE DISPLAYED
DISPLAY

2. Press the SET button to enter the DISPLAY function.
3. Press the UP/DOWN button until the preferred indication is visible in the multifunction display (as applicable to model).
   - RPM
   - SPEED

- CLOCK
- ENGINE TEMP
- ALTITUDE
- TOP SPEED
- AVG SPEED
- TOP RPM
- AVG RPM.

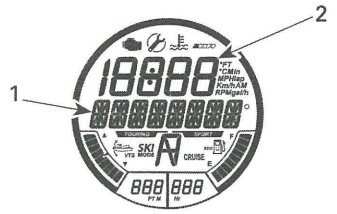

NUMERICAL DISPLAY SELECTION

1. Type of selected numerical display indication
2. Applicable value

4. Press the SET button to select and save the preferred indication, or wait for the display function to time out. The last indication visible will be automatically saved.

Resetting Numerical Display Indication

The following numerical display indications can be reset when selected:

- Average fuel consumption
- Top speed
- Average speed
- Top RPM
- Average RPM.

To reset the indication. double click the SET button. The numerical display will momentarily indicate zero (0).

NOTE: Each of these functions become active **ONLY** when selected as the numerical display indication.

Multifunction Gauge Setup

Clock Setting

1. Press the MODE button repeatedly until SETTINGS is visible in the multifunction display.

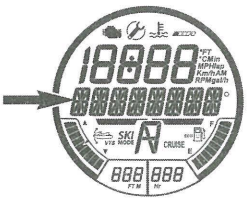

MESSAGE DISPLAYED

SETTINGS

2. Press the UP/DOWN button repeatedly until CLOCK is visible.

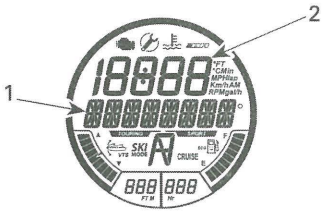

FUNCTION SELECTED - CLOCK

1. CLOCK indication
2. Time

3. Press the SET button to enter the function. CHANGE CLOCK OFFSET message will be displayed.

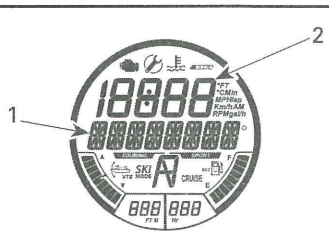

FUNCTION SELECTED - CHANGE CLOCK OFFSET

1. CHANGE CLOCK OFFSET indication
2. Time

4. Press the UP/DOWN button to adjust the clock to the correct local time.
5. Press the SET button to save the setting and return to the main display.

NOTE: The clock uses the GPS signal to maintain the appropriate time referenced to Greenwich Mean Time (GMT). When setting the clock, only the hour indication may be changed.

Units of Measurement and Language Setting

The multifunction gauge is capable of displaying information in metric or imperial units and in various languages.

To change the units of measurement or to change the language displayed in the multifunction gauge, see your authorized Sea-Doo dealer.

INFORMATION CENTER (GTX, RXT, WAKE PRO)

⚠ WARNING

Do not adjust the display while riding, you could lose control.

Information Center Description

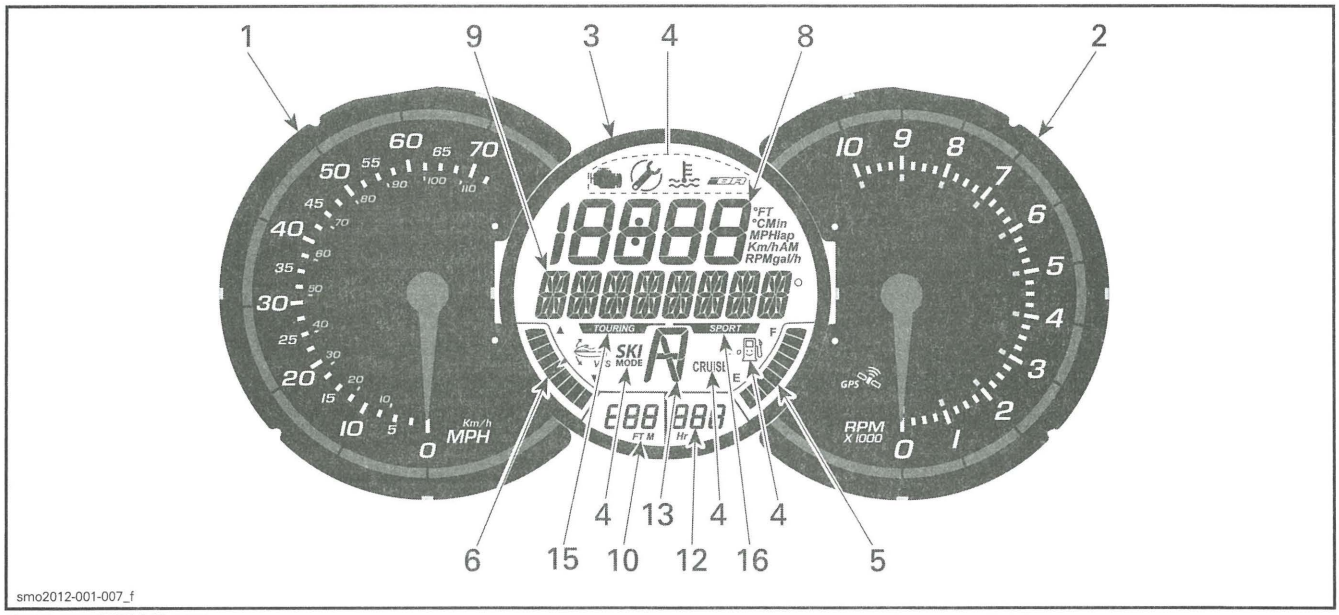

GTX 155/GTX S 155

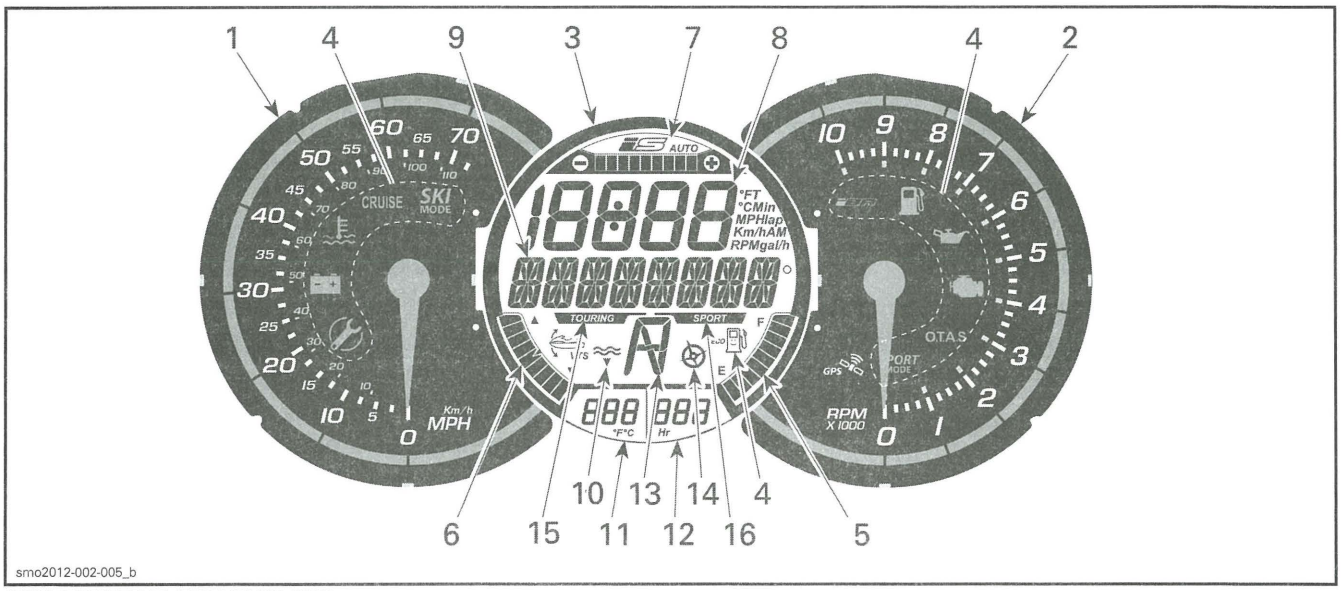

GTX 215/GTX iS LTD/WAKE PRO

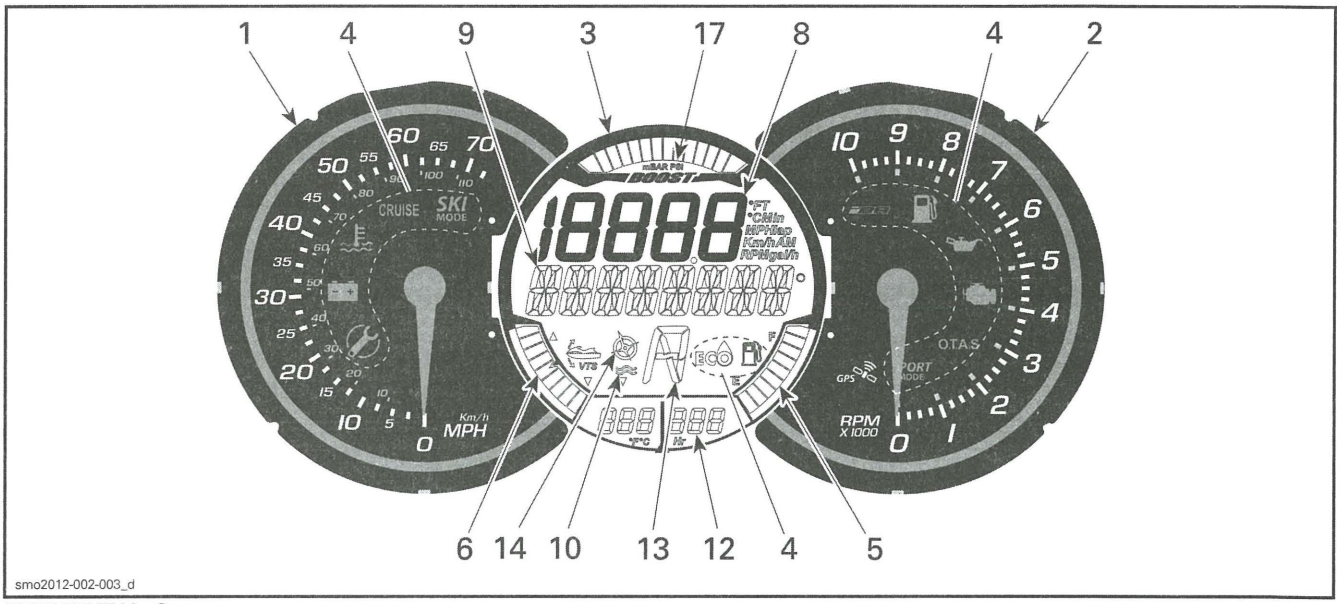

RXT-X/RXT-X aS

1) Speedometer

The speedometer, located in the LH side of the information center, provides an analog indication of the speed of the watercraft in miles per hour (MPH) and kilometers per hour (km/h).

The speed indication is based on a GPS (Global Positioning System) incorporated within the information center.

If for some reason the GPS signal is lost, a default mode is used whereby, the speed is calculated using information received from other systems to provide an estimated watercraft speed.

2) Tachometer

The tachometer provides an analog indication of the revolutions per minute (RPM) of the engine. Multiply the indicated number by 1000 to obtain the actual engine RPM.

3) Multifunction Gauge

The multifunction gauge, located in the center of the information center, is capable of displaying different indications simultaneously.

Numerical and multifunction displays in the digital screen indicator can be used to display various indications, or for selecting modes of operation and changing settings as explained in their respective sections.

Multifunction Gauge Features

	GTX 155 GTX S 155	GTX LTD iS 260	GTX 215	RXT	RXT-X/ RXT-X aS	WAKE PRO
TOURING mode indicator	X	X	X	X	N.A.	X
SPORT mode indicator	X	X	X	X	N.A.	X
Fuel level indication	X	X	X	X	X	X
Hour meter display	X	X	X	X	X	X
Water depth indication	Opt	X	Opt	Opt	Opt	Opt
ECO mode indicator	X	X	X	X	X	X
CRUISE mode indicator	X	N.A.	N.A.	N.A.	N.A.	N.A.
iBR position indicator	X	X	X	X	X	X
SKI mode indicator	Opt	N.A.	N.A.	N.A.	N.A.	N.A.
VTS position indication	X	X	X	X	X	X
Boost gauge	N.A.	N.A.	N.A.	N.A.	X	N.A.
iS indicator	N.A.	X	N.A.	N.A.	N.A.	N.A.

X = Indicates a standard feature
Opt = Feature available as an option
N.A. = Not Available or Not Active

4) Indicator Lights

Indicator lights (pilot lamps), inform you of a selected function or a system anomaly.

An indicator light may be accompanied by a scrolling message in the multifunction display.

See the following table for information on the usual pilot lamps. Refer to *MONITORING SYSTEM* for details on malfunction pilot lamps.

PILOT LAMPS (ON)	MESSAGE DISPLAY	DESCRIPTION
	MAINTENANCE REMINDER	Maintenance required. Bring your watercraft to your Sea-Doo dealer to have it serviced and to have the maintenance required indicator reset.
	LOW-FUEL	Low fuel level, approx. 25% tank capacity, 14 L (3.7 U.S. gal.) or fuel level sensor disconnected.
	Scrolling SLOW SPEED MODE message	CRUISE mode or SLOW SPEED MODE engaged. Refer to *OPERATING MODES* subsection.
	Scrolling SKI MODE messages	Ski Mode activated. Refer to *OPERATING MODES* subsection.
	Scrolling SPORT MODE messages	Sport Mode activated. Refer to *OPERATING MODES* subsection.

PILOT LAMPS (ON)	MESSAGE DISPLAY	DESCRIPTION
ALL MODELS EXCEPT RXT-X/RXT-X aS MODELS		
	FUEL ECO	Fuel Economy Mode activated. Refer to *OPERATING MODES* subsection.
RXT-X/RXT-X aS		
	FUEL ECO	Fuel Economy Mode activated. Refer to *OPERATING MODES* subsection.

5) Fuel Level Indication

A bar gauge located in the bottom RH side of the multifunction display continuously indicates the amount of fuel in the fuel tank while riding.

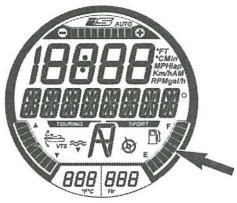

FUEL LEVEL INDICATION

When the fuel tank is full, 8 segments (bars) of the indicator are turned on. The top segment is not used.

Low Fuel Level Warning

It is active when there is only 2 segments of fuel indicated (approximately 25% fuel tank capacity or 14 L (3.7 U.S. gal.).

All Models Except GTX 155 and GTX S 155

LOW FUEL LEVEL WARNING	
Last 2 fuel gauge segments	ON
Fuel tank symbol (LED)	
Audible warning (one long beep)	Periodically
Scrolling LOW FUEL WARNING message	

GTX 155 and GTX S 155 Models

LOW FUEL LEVEL WARNING	
Last 2 fuel gauge segments	Flashing
Fuel tank symbol (LCD)	
Audible warning (one long beep)	Periodically
Scrolling LOW FUEL WARNING message	

6) VTS Position

The VTS position indication located in the bottom LH side of the digital screen shows the riding attitude of the watercraft.

A single segment of a bar gauge type indicator is turned on to indicate the relative position of the watercraft bow.

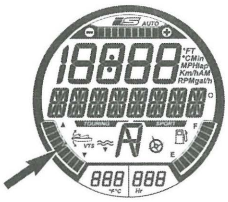

VTS POSITION INDICATION

Refer to *OPERATING INSTRUCTIONS* for more details on using the VTS.

7) iS Position

GTX Ltd iS

The iS display (intelligent Suspension) provides a visual indication of the relative height of the suspension.

It also indicates if the suspension is in AUTO mode of operation.

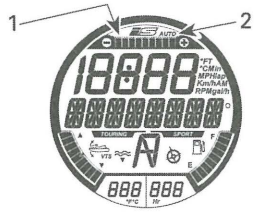

1. iS position indicator
2. iS AUTO mode indicator

When the suspension system is operating in AUTO mode, the AUTO indicator and all bar segments of the position indicator will be on.

When the suspension height is adjusted manually using the UP/DOWN buttons (while in IS mode), the system switches to MANUAL mode of operation. The AUTO indication disappears and only one bar segment of the position indicator will be on.

Refer to *OPERATING INSTRUCTIONS* for more information on using the suspension.

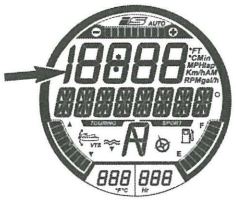

NUMERICAL DISPLAY

8) Numerical Display

The numerical display is used to provide a variety of indications as selected by the operator using the DISPLAY function in the multifunction display.

The available indications are dependent on the watercraft model or option installed.

AVAILABLE INDICATIONS IN NUMERICAL DISPLAY	GTX 155, GTX S 155	GTX 215	GTX LTD iS	RXT	RXT-X aS, RXT-X	WAKE PRO
Watercraft speed	Indication by default					
Engine RPM	X	X	X	X	X	X
Engine temperature	Opt	Opt	Opt	Opt	X	Opt
Lake water temperature	N.A.	N.A.	X	N.A.	N.A.	N.A.
Clock	X	X	X	X	X	X
Learning key settings	X	X	X	X	X	X
CRUISE SPEED setting	X	X	X	X	Opt	X
SLOW SPEED MODE setting	X	X	X	X	Opt	X
VTS preset	Opt	Opt	X	X	X	X
VTS settings (through gauge)	X	X	N.A.	N.A.	N.A.	N.A.
SKI MODE settings	Opt	Opt	Opt	Opt	Opt	X
Fuel consumption (instant and average)	X	X	X	X	X	X
Fuel autonomy (distance and time to empty)	Opt	Opt	X	Opt	X	Opt
Lap timer	Opt	Opt	Opt	Opt	X	Opt
Top speed/RPM Average speed/RPM	Opt	Opt	Opt	Opt	X	Opt
Altitude	N.A.	N.A.	X	N.A.	N.A.	N.A.

X = An X indicates a **standard** feature
Opt = Feature available as an **option**
N.A. = Not Available

When the information center is first powered up, the numerical display defaults to the last selected indication.

9) Multifunction Display

The multifunction display is used to:
- Display the WELCOME message on power up.
- Display the KEY recognition message.
- Provide various indications as selected by the operator.
- Activating and setting various functions and modes of operation.
- Display scrolling messages of function activation or system faults.
- Display fault codes.

NOTE: The default indication in the multifunction display is the compass direction.

10) Water Depth Display

The water depth display provides an indication of the lake water depth.

The system is capable of indicating water depth under the hull in single increments up to 50 m (164 ft).

NOTE: Under certain conditions, the display may stop indicating. The display ability to provide an indication of the water depth depends on the conditions of use.

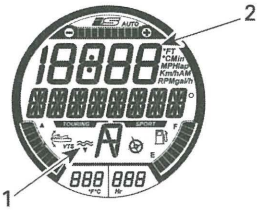

WATER DEPTH DISPLAY

1. Depth finder indicator
2. Water depth indication

NOTE: The water depth indication is only available when a depth sounder is installed and detected.

⚠ WARNING

Never use the depth sounder as a warning device to ride in shallow water.

11) Lake Water Temperature Display

GTX Limited iS Only

Continuously displays surface water temperature.

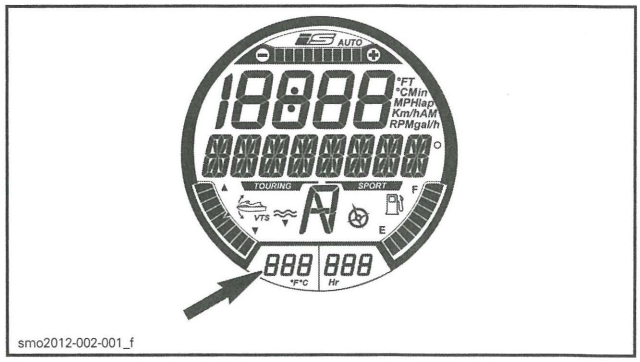

The numerical display may also be selected to display water temperature. See *NUMERICAL DISPLAY* in this section.

To change the unit of measurement (°C or °F), see your authorized Sea-Doo dealer.

12) Hour Meter Display (HR)

Continuously displays the accumulated engine hours.

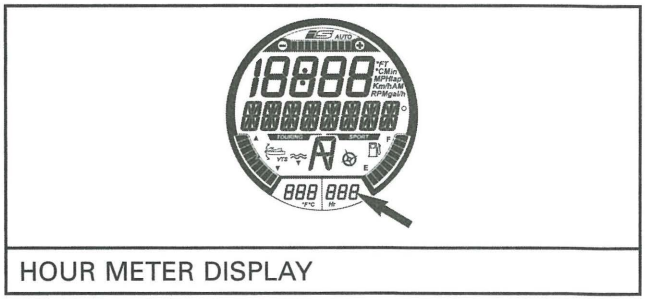

HOUR METER DISPLAY

13) iBR Position

Provides an indication of the iBR gate position.
- N (neutral)
- F (forward)
- R (reverse).

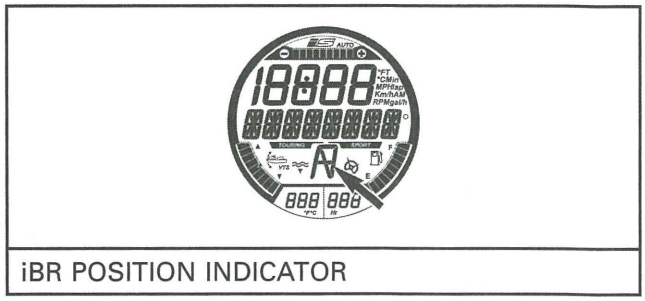

iBR POSITION INDICATOR

14) Compass

A GPS incorporated in the information center provides the indication in the multifunction display.

The cardinal points, intermediate cardinal points, as well as the azimuth the watercraft is travelling are displayed in the multifunction display by default when the watercraft is moving.

For a compass indication to be displayed, the GPS must have a good link with the navigation satellites.

This is confirmed when the COMPASS active indicator is visible in the digital screen.

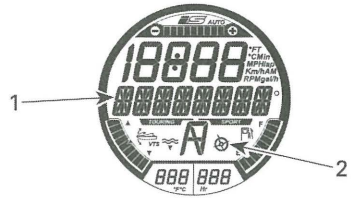

COMPASS (GAUGE WITHOUT BOOST GAUGE)

1. Compass indication
2. Compass active indicator

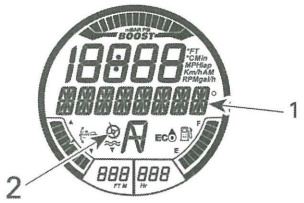

COMPASS (GAUGE WITH BOOST GAUGE)

1. Compass indication
2. Compass active indicator

NOTE: The compass indication is only available above 5 km/h (3 MPH).

⚠ WARNING

Use the compass as a guide only. Not to be used for precision navigation purposes.

15) Touring Mode Indicator

All Models Except RXT-X/RXT-X aS.

When the TOURING mode indicator is ON, the default TOURING mode is active.

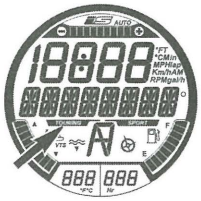

TOURING MODE INDICATOR

For more information on the touring mode, refer to *OPERATING MODES* subsection.

16) Sport Mode Indicator

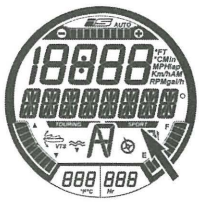

SPORT MODE INDICATOR (GAUGE WITHOUT BOOST GAUGE)

When sport mode of operation is selected, the sport mode indicator will come on and stay on until sport mode is deactivated, or the watercraft is shut down.

NOTE: The sport mode is not the default riding mode. To be active, it must be selected after starting the engine.

For instructions on how to engage sport mode, refer to *OPERATING MODES* subsection.

GTX LTD iS/RXT/WAKE PRO

In addition to the sport mode indicator in the multifunction display, a SPORT MODE indicator light turns ON in the tachometer.

RXT-X/RXT-X aS

There is no sport mode indicator in the multifunction display, only a SPORT MODE indicator light turns ON in the tachometer.

17) Boost Gauge



BOOST INDICATOR

The boost gauge indicates the manifold pressure of the engine provided by the supercharger.

Navigating the Multifunction Display

When the electrical system is powered up and the cluster has completed its self test function, a WELCOME ABOARD SEA-DOO scrolling message will appear for a few seconds. After the welcome message, nothing will appear in the display until the watercraft is operated.

When the watercraft is being operated, the multifunction display provides an indication of compass heading or scrolling messages from the monitoring system.

The multifunction display is also used to display a menu for the selection of various functions which, permit changing the numerical display indication, system modes of operation, settings, active system fault codes, and a lap timer.

⚠ WARNING

Selecting various numerical displays, system modes of operation or changing settings should only be carried out with the watercraft stopped. Selecting these various functions while operating the watercraft at speed is not recommended as it deters your attention from situational awareness.

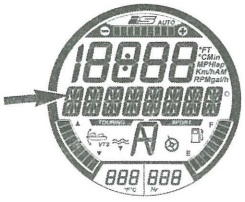

MULTIFUNCTION DISPLAY

NOTE: To change the unit of measurement or the language displayed, see your authorized Sea-Doo dealer.

Selecting Functions

When operating at speed, the multifunction display normally provides an indication of the compass direction and azimuth the watercraft is traveling.

To select the various functions available through the multifunction display, press the MODE button repeatedly until the desired function is visible:

- LAP TIME
- SKI MODE
- LAP TIME
- FUEL CONSUMPTION
- VTS MODE
- DISPLAY
- FAULT CODES
- KEY MODE
- SETTINGS.

Then press the SET button to enter that function.

NOTE: The fault code function is only available when there is an active fault. The settings and key mode functions are only available when the engine is shut off. The key mode function is only available with a normal key.

Function Description

Lap Timer

The lap timer can be used to record up to 50 individual lap times.

To activate and use the lap timer, carry out the following:

1. Press the MODE button repeatedly until LAP TIME is visible in the multifunction display.

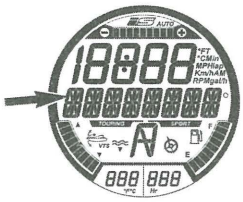

MESSAGE DISPLAYED

LAP TIME

2. Press the SET button to enter the function, the lap timer will be activated and visible in the display.

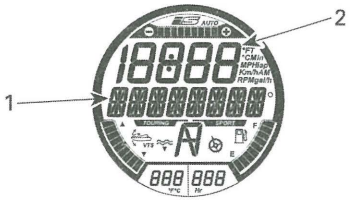

FUNCTION SELECTED: LAP TIMER

1. Lap time
2. Lap count

3. To start the timer, press the SET button.

NOTE: The timer starts immediately when pressing the SET button.

4. To record each lap time, press the SET button at the start of each lap.

NOTE: The lap time will be recorded, the lap counter in the numerical display will count the number of laps recorded, and the timer will continue to run.

5. To save the last lap and stop the timer, press the MODE button.

To view each lap time, use the UP or DOWN button. The lap counter will indicate which lap is indicated.

To view the cumulative lap time of all laps recorded, use the UP or DOWN button until ALL is visible in the lap counter.

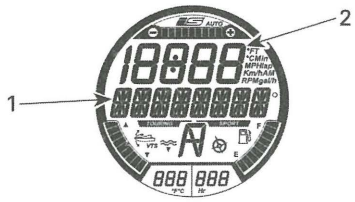

MESSAGE DISPLAYED: LAP TIMER

1. Total time
2. ALL is displayed here

To reset the lap timer and lap counter, press and hold the SET button until the timer and counter are reset to 0 (zero).

Ski Mode

Ski mode is used for repeated controlled launches when towing a skier or wakeboarder. Refer to *OPERATING MODES* for more details.

Fuel Consumption

The FUEL CONSUMPTION function is used to display the watercrafts fuel consumption in four different ways.

- Instant fuel flow per hour (gal/h or l/h)
- Average fuel flow per hour (gal/h or l/h)
- Distance to empty (Mi or Km)
- Time to empty (h or min).

The fuel consumption functions are not continuously active.

A fuel consumption function becomes active only when selected as the indication in the numerical display.

When the LOW FUEL indications come on in the multifunction gauge, the "TIME TO EMPTY" and "DISTANCE TO EMPTY" functions will indicate "0" (zero) if they are the selected indication.

To display the watercraft fuel consumption, carry out the following:

1. Press the MODE button repeatedly until FUEL CONSUMPTION is visible in the multifunction display.

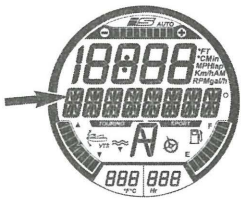

MESSAGE DISPLAYED

FUEL CONSUMPTION

2. Press the UP or DOWN button to toggle to the desired fuel consumption display mode.

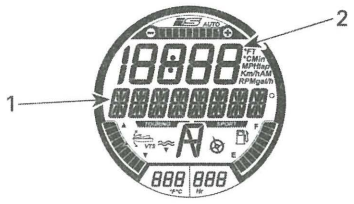

FUEL CONSUMPTION DISPLAY MODE

1. INSTANT FUEL CONSUMPTION message
2. Fuel consumption value

3. Press the SET button to save the setting and return to the main display.

NOTE: The fuel consumption value will be displayed in the numerical display. Double click the SET button to reset the average fuel consumption indication. The display will momentarily indicate zero (0).

VTS Mode

The VTS MODE function is used to manually set the VTS or change VTS PRESET settings. Refer to *OPERATING INSTRUCTIONS* subsection for details.

Display

The DISPLAY function is used to change the indication in the numerical display. Refer to *CHANGING NUMERICAL DISPLAY INDICATION.*

Fault Codes

The FAULT CODES function is used to display active fault codes. Refer to *MONITORING SYSTEM* subsection.

Key Mode

The KEY MODE function is used for changing LEARNING key settings. Refer to *OPERATING MODES* subsection for details.

Settings

The SETTINGS function is used for:

- Clock setting. Refer to *MULTIFUNCTION GAUGE SETUP*
- Dock mode setting. Refer to iS (INTELLIGENT SUSPENSION) in the *SUSPENSIONS* subsection
- iBR override function for maintenance.

Changing Numerical Display Indication

To change the indication in the numerical display, carry out the following:

1. Press the MODE button on the RH handlebar repeatedly until DISPLAY is visible in the multifunction display.

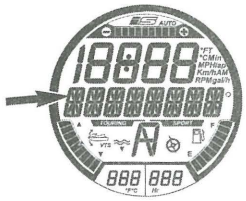

MESSAGE DISPLAYED

DISPLAY

2. Press the SET button to enter the DISPLAY function.
3. Press the UP or DOWN button until the preferred available indication appears.
   - RPM
   - SPEED
   - LAKE TEMPERATURE (only on model GTX Limited iS 260)
   - DEPTH
   - ENGINE TEMP
   - ALTITUDE (only on Limited models)
   - TOP SPEED
   - AVG SPEED
   - TOP RPM
   - AVG RPM
   - CLOCK.

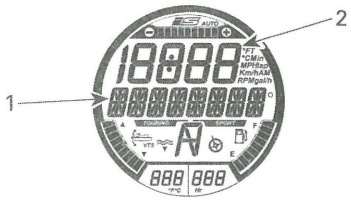

NUMERICAL DISPLAY SELECTION

1. Type of selected numerical display indication
2. Applicable value

4. Press the SET button to select and save the preferred indication, or wait for the display function to time out. The last indication visible will be automatically saved.

The following abbreviations are used in the numerical display:

- FT or M
- RPM
- MPH or Km/h
- °F or °C
- AM or PM
- Gal/h or l/h.

Resetting Numerical Display Indication

The following numerical display indications can be reset:

- Average fuel consumption
- Top speed
- Average speed
- Top RPM
- Average RPM.

To reset indications, double click the SET button. The numerical display will momentarily indicate zero (0).

NOTE: Each of these functions become active ONLY when selected as the numerical display indication.

Multifunction Gauge Setup

Changing Clock Setting

1. Press the MODE button repeatedly until SETTINGS is visible in the multifunction display.

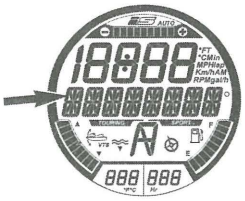

MESSAGE DISPLAYED
SETTINGS

2. Press the UP or DOWN button repeatedly until CLOCK is visible.

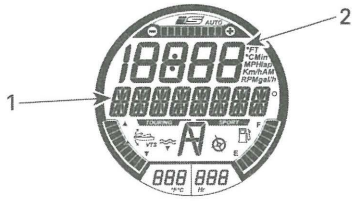

FUNCTION SELECTED - CLOCK
1. CLOCK message 2. Time

3. Press the SET button to enter the function. CHANGE CLOCK OFFSET message will be displayed.

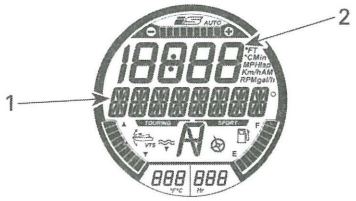

FUNCTION SELECTED - CHANGE CLOCK OFFSET
1. CHANGE CLOCK OFFSET message 2. Time

4. Press the UP or DOWN button to adjust the clock to the correct local time.
5. Press the SET button to save the setting and return to the main display.

NOTE: The clock uses the GPS signal to maintain the appropriate time referenced to Greenwich Mean Time (GMT). When setting the clock, only the hour indication may be changed.

Units of Measurement and Language Setting

The multifunction gauge is capable of displaying information in metric or imperial units and in various languages.

To change the units of measurement or to change the language displayed in the multifunction gauge, see your authorized Sea-Doo dealer.

Multifunction Display Messages

For a list of usual messages that may be displayed in the multifunction display, refer to *MULTIFUNCTION DISPLAY MESSAGES* in this section.

INFORMATION CENTER (RXP-X)

⚠ WARNING

Do not adjust the display while riding, you could lose control.

Information Center Description

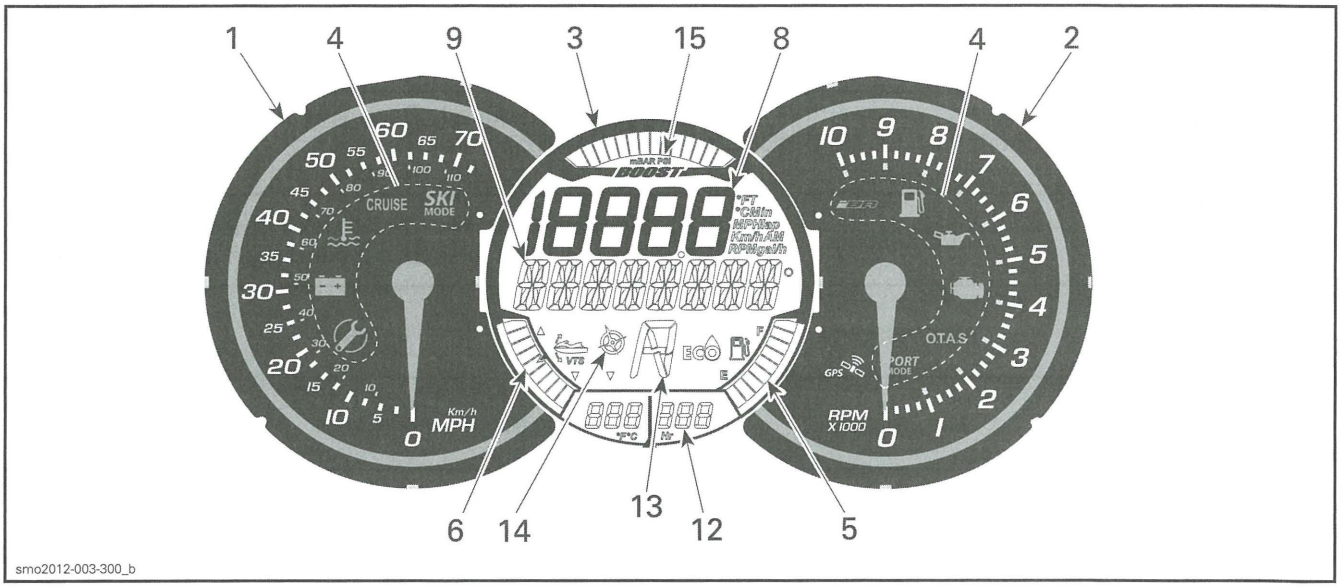

RXP-X

1) Speedometer

The speedometer, located in the LH side of the information center, provides an analog indication of the speed of the watercraft in miles per hour (MPH) and kilometers per hour (km/h).

The speed indication is based on a GPS (Global Positioning System) incorporated within the information center.

If for some reason the GPS signal is lost, a default mode is used whereby, the speed is calculated using information received from other systems to provide an estimated watercraft speed.

2) Tachometer

The tachometer provides an analog indication of the revolutions per minute (RPM) of the engine. Multiply the indicated number by 1000 to obtain the actual engine RPM.

3) Multifunction Gauge

The multifunction gauge, located in the center of the information center, is capable of displaying different indications simultaneously.

Numerical and multifunction displays in the digital screen indicator can be used to display various indications, or for selecting modes of operation and changing settings as explained in their respective sections.

Multifunction Gauge Features

	RXP-X
Fuel level indication	X
Hour meter display	X
Water depth indication	Opt
ECO mode indicator	X
VTS position indication	X
Compass	X
Boost Gauge	X
X = An X indicates a **standard** feature Opt = Feature available as an **option**	

4) Indicator Lights

Indicator lights (pilot lamps), inform you of a selected function or a system anomaly.

An indicator light may be accompanied by a scrolling message in the multifunction display.

See the following table for information on the usual pilot lamps. Refer to *MONITORING SYSTEM* for details on malfunction pilot lamps.

PILOT LAMPS (ON)	MESSAGE DISPLAY	DESCRIPTION
	MAINTENANCE REMINDER	Maintenance required. Bring your watercraft to your Sea-Doo dealer to have it serviced and to have the maintenance required indicator reset.
	LOW-FUEL	Low fuel level, approx. 25% tank capacity, 14 L (3.7 U.S. gal.) or fuel level sensor disconnected.
	No message	Feature not active on this model.
	No message	Feature not active on this model.
	Scrolling SPORT MODE messages	Sport Mode activated. Refer to *OPERATING MODES* subsection.

5) Fuel Level Indication

A bar gauge located in the bottom RH side of the multifunction display continuously indicates the amount of fuel in the fuel tank while riding.

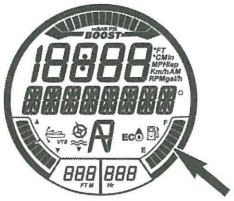

FUEL LEVEL INDICATION

When the fuel tank is full, 8 segments (bars) of the indicator are turned on. The top segment is not used.

Low Fuel Level Warning

It is active when there is only 2 segments of fuel indicated (approximately 25% fuel tank capacity or 14 L (3.7 U.S. gal.).

LOW FUEL LEVEL WARNING	
Last 2 fuel gauge segments	Flashing
Fuel tank symbol (LCD)	
Audible warning (one long beep)	Periodically
Scrolling LOW FUEL WARNING message	

6) VTS Position

The VTS position indication located in the bottom LH side of the digital screen shows the riding attitude of the watercraft.

A single segment of a bar gauge type indicator is turned on to indicate the relative position of the watercraft bow.

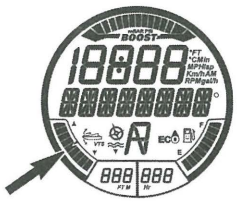

VTS POSITION INDICATION

Refer to *OPERATING INSTRUCTIONS* for more details on using the VTS.

7) iS Position

Not available for this model.

8) Numerical Display

The numerical display is used to provide a variety of indications as selected by the operator using the DISPLAY function in the multifunction display.

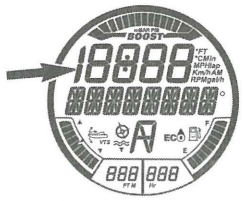

NUMERICAL DISPLAY

The available indications are dependent on the watercraft model or option installed.

AVAILABLE INDICATIONS IN NUMERICAL DISPLAY	RXP-X
Watercraft speed	Indication by default
Engine RPM	X
Engine temperature	X
Lake water temperature	N.A.
Clock	X
Learning key settings	X
CRUISE SPEED setting	Opt
SLOW SPEED MODE setting	Opt
VTS preset	X
VTS settings (through gauge)	N.A.
SKI MODE settings	N.A.
Fuel consumption (instant and average)	X
Fuel autonomy (distance and time to empty)	X
Lap timer	X
Top speed/RPM Average speed/RPM	X
Altitude	N.A.
X = An X indicates a **standard** feature Opt = Feature available as an **option** N.A. = Not Available	

When the information center is first powered up, the numerical display defaults to the last selected indication.

9) Multifunction Display

The multifunction display is used to:
- Display the WELCOME message on power up.
- Display the KEY recognition message.
- Provide various indications as selected by the operator.
- Activating and setting various functions and modes of operation.
- Display scrolling messages of function activation or system faults.
- Display fault codes.

NOTE: The default indication in the multifunction display is the compass direction.

10) Water Depth Display

Not available for this model.

11) Water Temperature Display

Not available for this model.

12) Hour Meter Display (HR)

Continuously displays the accumulated engine hours.

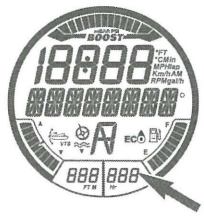

HOUR METER DISPLAY

13) iBR Position

Provides an indication of the iBR gate position.
- N (neutral)
- F (forward)
- R (reverse).

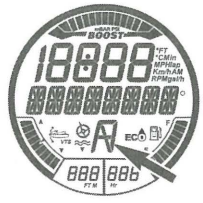

iBR POSITION INDICATOR

14) Compass

A GPS incorporated in the information center provides the indication in the multifunction display.

The cardinal points, intermediate cardinal points, as well as the azimuth the watercraft is travelling are displayed in the multifunction display by default when the watercraft is moving.

For a compass indication to be displayed, the GPS must have a good link with the navigation satellites.

This is confirmed when the COMPASS active indicator is visible in the digital screen.

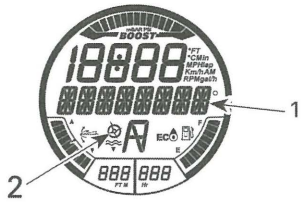

COMPASS

1. Compass indication
2. Compass active indicator

NOTE: The compass indication is only available above 5 km/h (3 MPH).

⚠ WARNING

Use the compass as a guide only. Not to be used for precision navigation purposes.

15) Boost Gauge



BOOST INDICATOR

The boost gauge indicates the manifold pressure of the engine provided by the supercharger.

Navigating the Multifunction Display

When the electrical system is powered up and the cluster has completed its self test function, a WELCOME ABOARD SEA-DOO scrolling message will appear for a few seconds. After the welcome message, nothing will appear in the display until the watercraft is operated.

When the watercraft is being operated, the multifunction display provides an indication of compass heading or scrolling messages from the monitoring system.

The multifunction display is also used to display a menu for the selection of various functions which, permit changing the numerical display indication, system modes of operation, settings, active system fault codes, and a lap timer.

⚠ WARNING

Selecting various numerical displays, system modes of operation or changing settings should only be carried out with the watercraft stopped. Selecting these various functions while operating the watercraft at speed is not recommended as it deters your attention from situational awareness.

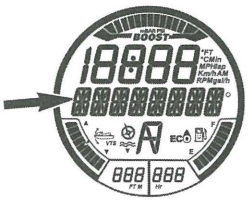

MULTIFUNCTION DISPLAY

NOTE: To change the unit of measurement or the language displayed, see your authorized Sea-Doo dealer.

Selecting Functions

When operating at speed, the multifunction display normally provides an indication of the compass direction and azimuth the watercraft is traveling.

To select the various functions available through the multifunction display, press the MODE button repeatedly until the desired function is visible:

- LAP TIME
- FUEL CONSUMPTION
- VTS MODE
- DISPLAY
- FAULT CODES
- KEY MODE
- SETTINGS.

Then press the SET button to enter that function.

NOTE: The fault code function is only available when there is an active fault. The settings function is only available when the engine is shut off. The key mode function is only available with a normal key.

Function Description

Lap Timer

The lap timer can be used to record up to 50 individual lap times.

To activate and use the lap timer, carry out the following:

1. Press the MODE button repeatedly until LAP TIME is visible in the multifunction display.

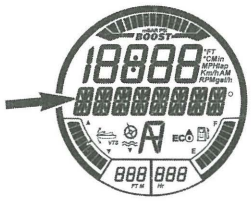

MESSAGE DISPLAYED
LAP TIME

2. Press the SET button to enter the function, the lap timer will be activated and visible in the display.

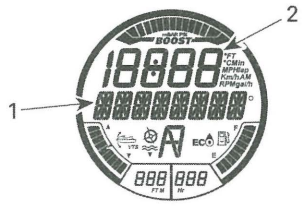

FUNCTION SELECTED: LAP TIMER
1. Lap time 2. Lap count

3. To start the timer, press the SET button.

NOTE: The timer starts immediately when pressing the SET button.

4. To record each lap time, press the SET button at the start of each lap.

NOTE: The lap time will be recorded, the lap counter in the numerical display will count the number of laps recorded, and the timer will continue to run.

5. To save the last lap and stop the timer, press the MODE button.

To view each lap time, use the UP or DOWN button. The lap counter will indicate which lap is indicated.

To view the cumulative lap time of all laps recorded, use the UP or DOWN button until ALL is visible in the lap counter.

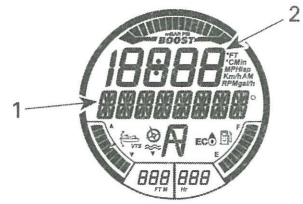

MESSAGE DISPLAYED: LAP TIMER
1. Total time 2. ALL is displayed here

To reset the lap timer and lap counter, press and hold the SET button until the timer and counter are reset to 0 (zero).

Fuel Consumption

The FUEL CONSUMPTION function is used to display the watercrafts fuel consumption in four different ways.

- Instant fuel flow per hour (gal/h or l/h)
- Average fuel flow per hour (gal/h or l/h)
- Distance to empty (Mi or Km)
- Time to empty (h or min).

The fuel consumption functions are not continuously active.

A fuel consumption function becomes active only when selected as the indication in the numerical display.

When the LOW FUEL indications come on in the multifunction gauge, the "TIME TO EMPTY" and "DISTANCE TO EMPTY" functions will indicate "0" (zero) if they are the selected indication.

To display the watercraft fuel consumption, carry out the following:

1. Press the MODE button repeatedly until FUEL CONSUMPTION is visible in the multifunction display.

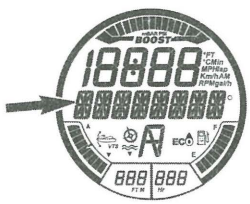

MESSAGE DISPLAYED
FUEL CONSUMPTION

2. Press the UP or DOWN button to toggle to the desired fuel consumption display mode.

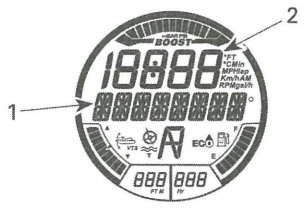

FUEL CONSUMPTION DISPLAY MODE

1. INSTANT FUEL CONSUMPTION message
2. Fuel consumption value

3. Press the SET button to save the setting and return to the main display.

NOTE: The fuel consumption value will be displayed in the numerical display. Double click the SET button to reset the average fuel consumption indication. The display will momentarily indicate zero (0).

VTS Mode

The VTS MODE function is used to manually set the VTS or change VTS PRESET settings. Refer to *OPERATING INSTRUCTIONS* subsection for details.

Display

The DISPLAY function is used to change the indication in the numerical display. Refer to *CHANGING NUMERICAL DISPLAY INDICATION.*

Fault Codes

The FAULT CODES function is used to display active fault codes. Refer to *MONITORING SYSTEM* subsection.

Key Mode

The KEY MODE function is used for changing LEARNING key settings. Refer to *OPERATING MODES* subsection for details.

Settings

The SETTINGS function is used for:

- Clock setting. Refer to *MULTIFUNCTION GAUGE SETUP*
- iBR override function for maintenance.

Multifunction Display Messages

For a list of usual messages that may be displayed in the multifunction display, refer to *MULTIFUNCTION DISPLAY MESSAGES* in this section.

Changing Numerical Display Indication

To change the indication in the numerical display, carry out the following:

1. Press the MODE button on the RH handlebar repeatedly until DISPLAY is visible in the multifunction display.

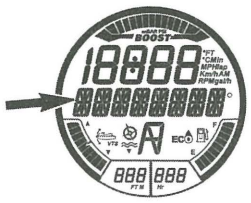

MESSAGE DISPLAYED

DISPLAY

2. Press the SET button to enter the DISPLAY function.
3. Press the UP or DOWN button until the preferred indication appears.
   - RPM
   - SPEED
   - ENGINE TEMP
   - TOP SPEED
   - AVG SPEED
   - TOP RPM
   - AVG RPM
   - CLOCK.

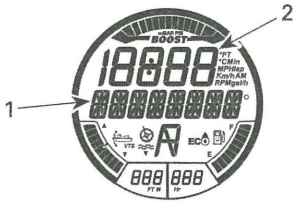

NUMERICAL DISPLAY SELECTION

1. Type of selected numerical display indication
2. Applicable value

4. Press the SET button to select and save the preferred indication, or wait for the display function to time out. The last indication visible will be automatically saved.

The following abbreviations are used in the numerical display:

- FT or M
- RPM
- MPH or Km/h
- °F or °C

- AM or PM
- Gal/h or l/h.

Resetting Numerical Display Indication

The following numerical display indications can be reset:

- Average fuel consumption
- Top speed
- Average speed
- Top RPM
- Average RPM.

To reset indications, double click the SET button. The numerical display will momentarily indicate zero (0).

NOTE: Each of these functions become active ONLY when selected as the numerical display indication.

Multifunction Gauge Setup

Changing Clock Setting

1. Press the MODE button repeatedly until SETTINGS is visible in the multifunction display.

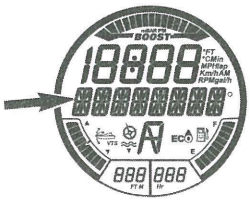

MESSAGE DISPLAYED
SETTINGS

2. Press the UP or DOWN button repeatedly until CLOCK is visible.

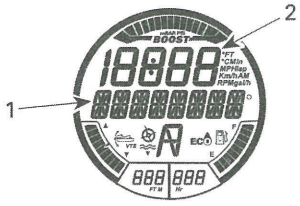

FUNCTION SELECTED - CLOCK
1. CLOCK message 2. Time

3. Press the SET button to enter the function. CHANGE CLOCK OFFSET message will be displayed.

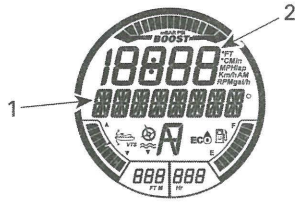

FUNCTION SELECTED - CHANGE CLOCK OFFSET
1. CHANGE CLOCK OFFSET message 2. Time

4. Press the UP or DOWN button to adjust the clock to the correct local time.
5. Press the SET button to save the setting and return to the main display.

NOTE: The clock uses the GPS signal to maintain the appropriate time referenced to Greenwich Mean Time (GMT). When setting the clock, only the hour indication may be changed.

Units of Measurement and Language Setting

The multifunction gauge is capable of displaying information in metric or imperial units and in various languages.

To change the units of measurement or to change the language displayed in the multifunction gauge, see your authorized Sea-Doo dealer.

OPERATING MODES

Touring Mode

By default, the watercraft is in TOURING mode of operation when first started.

A TOURING mode indicator is ON in the multifunction gauge to confirm the active mode of operation.

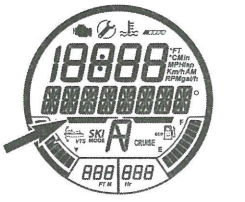

TOURING MODE INDICATOR

Sport Mode

When selected, SPORT MODE provides for instant throttle response and more rapid accelerations than TOURING MODE.

A SPORT mode indicator is ON in the multifunction gauge to confirm the active mode of operation.

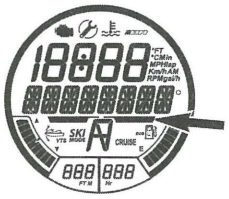

SPORT MODE INDICATOR

Once activated, SPORT MODE will remain active until it is deactivated by the operator, or the engine is shut down whereby it defaults back to TOURING MODE.

Activating Sport Mode

To activate sport mode while riding at speed, carry out the following:

⚠ WARNING

When activating sport mode, be sure to maintain situational awareness of other watercraft, obstacles, or persons in the water.

1. Depress and hold the SPORT button for at least 3 seconds.

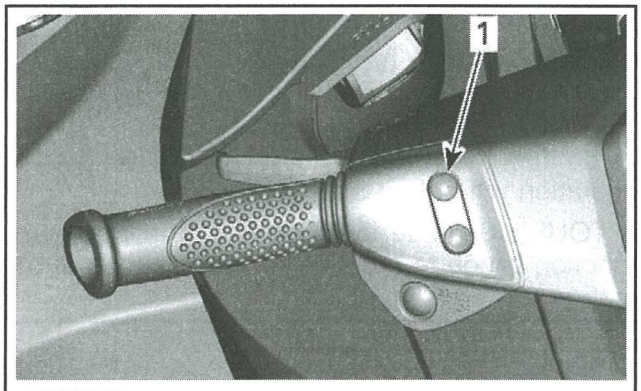

TYPICAL
1. Sport button

NOTE: The following **important** message will scroll across the multifunction display:

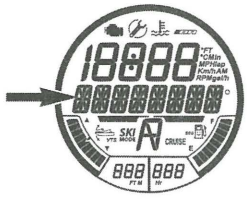

MESSAGE DISPLAYED

ENTERING SPORT MODE - INCREASED ACCELERATION - INSTRUCT PASSENGERS TO HOLD - PRESS_SPORT_BUTTON

⚠ WARNING

Ensure passengers are advised that sport mode provides for increased accelerations and that they are to hold on tightly.

2. Press the SPORT button again to activate sport mode.

A scrolling SPORT MODE ACTIVATED message will momentarily confirm that sport mode has been activated.

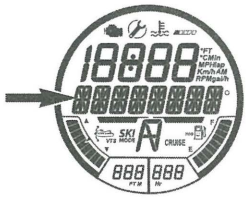

MESSAGE DISPLAYED

SPORT MODE ACTIVATED

NOTE: After a few seconds, the gauge will revert to its normal display.

3. Ensure the SPORT mode indicator is turned on.

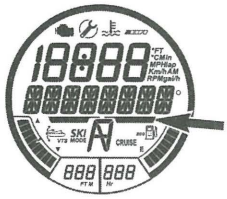

SPORT MODE INDICATOR

NOTE: The SPORT mode indicator will come on and stay on as long as sport mode is active.

Deactivating Sport Mode

To deactivate sport mode while riding at speed, carry out the following:

⚠ WARNING

When deactivating sport mode, be sure to maintain situational awareness of other watercraft, obstacles, or persons in the water.

1. Depress and hold the SPORT button for at least 3 seconds.

NOTE: The following message will scroll in the multifunction display: SPORT MODE DEACTIVATED.

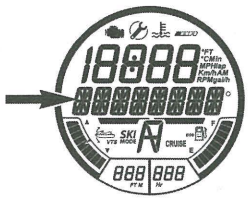

MESSAGE DISPLAYED
SPORT MODE DEACTIVATED

NOTE: After a few seconds, the gauge will revert to its normal display.

2. Ensure the TOURING mode indicator is on.

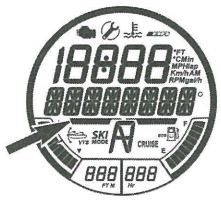

TOURING MODE INDICATOR

ECO Mode (Fuel Economy Mode)

How to Activate ECO Mode

1. Depress the Eco button for at least 3 seconds.

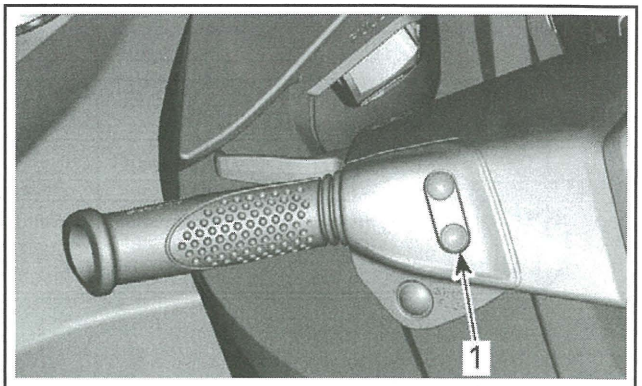

smo2012-002-009_b

TYPICAL
1. ECO button

The following message will be displayed on the multifunction display:

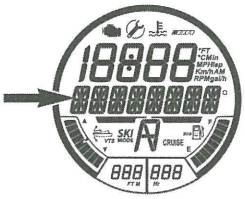

MESSAGE DISPLAYED
ECO MODE

The ECO mode indicator will also be activated.

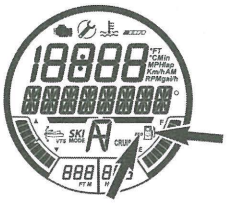

ECO MODE INDICATORS (Fuel Economy Mode)

How to Deactivate ECO Mode

1. Depress the Eco button for at least 3 seconds.

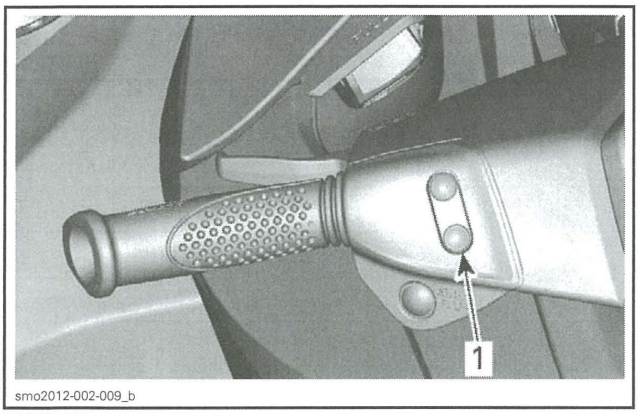

TYPICAL
1. Eco button

The ECO mode indicator will be deactivated.

Cruise Mode

Cruise mode is a function of iTC (intelligent Throttle Control) system that allows the operator to set the desired maximum watercraft speed.

This is useful when cruising for long distances, operating in limited speed zones, or towing a tuber, skier or wake boarder.

Cruise mode only limits forward speed, the operator must keep the throttle depressed to maintain forward speed.

Once the maximum cruise speed is set, the operator can vary the watercraft speed from idle speed up to the set cruise speed using the throttle lever. The set cruise speed will not be exceeded even if the throttle lever is fully depressed.

As you proceed under a constant cruising speed setting, keep your attention level up to maintain good situational awareness.

Slowing down is a matter of releasing the throttle lever further than the set point, or by pulling the iBR lever in.

If the iBR lever is pulled in for braking, CRUISE mode is overridden but **not deactivated**.

Once the iBR lever is released and the throttle is pulled in to engage forward position, the cruise function will reengage to limit the watercraft speed as it was set before.

NOTE: Cruise mode is **not** available if slow speed mode or ski mode mode is engaged.

Cruise Mode Activation at Idle Speed

NOTE: This function is available up to approximately 10 km/h (6 MPH).

To activate and preset CRUISE MODE at idle speed, carry out the following:

1. Tap the throttle lever to move the iBR to the forward position.
2. Press and hold the cruise button.

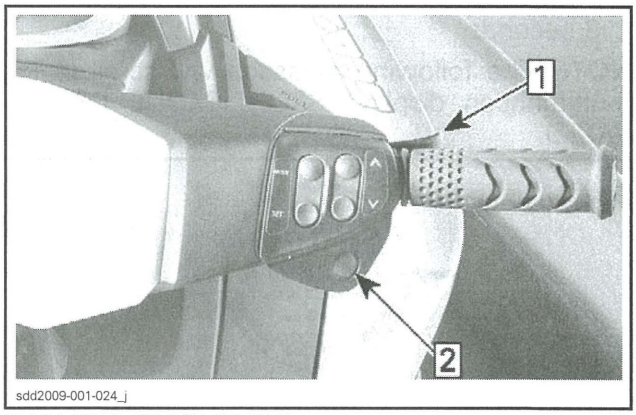

ENGAGING CRUISE AT IDLE
Step 1: Tap throttle to engage FORWARD
Step 2: Press cruise button

The following message will appear in the multifunction display.

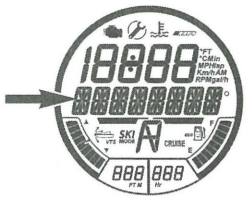

MESSAGE DISPLAYED
CRUISE MODE _ SELECT SPEED _ PRESS SET TO ACCEPT OR MODE TO EXIT

3. Press the UP button until the desired cruise speed is indicated in the numerical display.

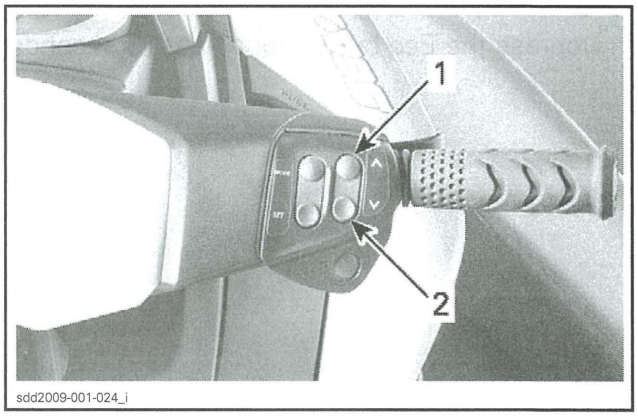

1. UP button
2. DOWN button

The following will be displayed in the multifunction gauge.

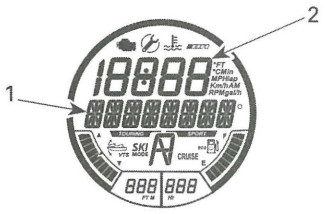

FUNCTION SELECTED - CRUISE MODE

1. CRUISE MODE _ SPEED ADJUSTING
2. Cruise speed set point indication

4. Press the SET button to save the cruise speed selected and engage cruise mode. The following scrolling message will appear in the multifunction display.

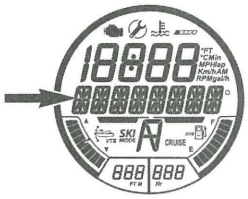

MESSAGE DISPLAYED

CRUISE MODE ACTIVE

A beep indicating that you are now in cruise mode will sound, and a CRUISE indicator will come on in the multifunction gauge.

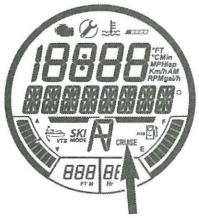

CRUISE MODE INDICATOR

Cruise Mode Activation Above Idle Speed

To activate cruise mode above idle speed (10 km/h (6 MPH)):

1. Accelerate to the desired watercraft speed and hold throttle lever steady.
2. Press and hold the cruise button for approximately 1 second.

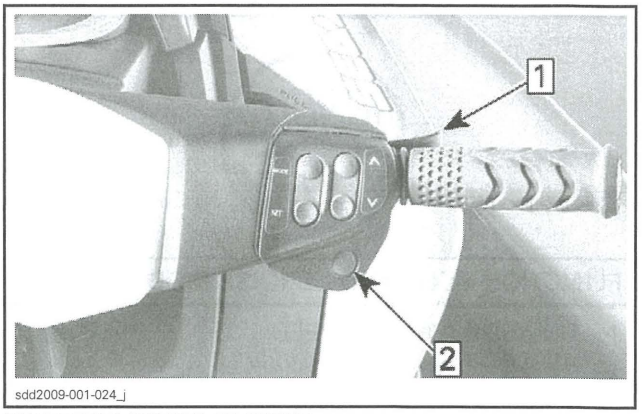

ENGAGING CRUISE AT SPEED
Step 1: Accelerate to desired speed and hold throttle steady
Step 2: Press cruise button

A beep indicating that you are now in cruise mode will sound, and a CRUISE indicator will come on in the multifunction gauge.

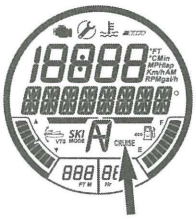

CRUISE MODE INDICATOR

Changing Set Cruise Speed

To **increase** or **decrease** the set cruise speed:

1. Hold the throttle lever all the way in to the handlebar.
2. On the RH handlebar, press UP/DOWN button.

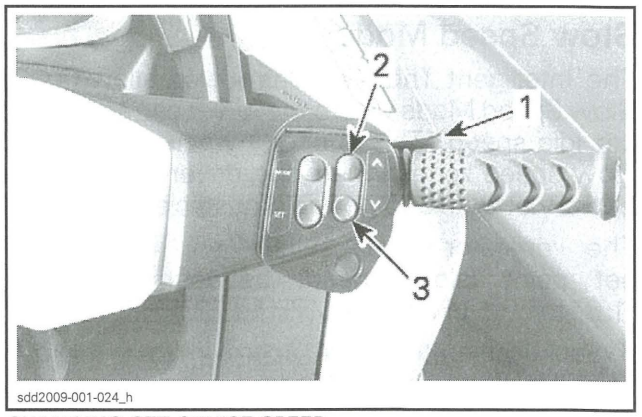

CHANGING SET CRUISE SPEED
1. *Throttle lever*
2. *UP button*
3. *DOWN button*

While the UP/Down is being pressed to change the speed setting, the following will appear in the multifunction gauge.

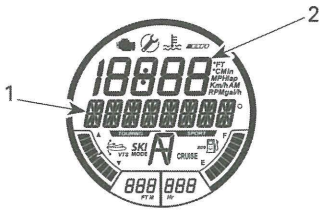

FUNCTION SELECTED - CRUISE MODE

1. CRUISE MODE _ SPEED ADJUSTING
2. Cruise speed set point indication

NOTE: Pressing the UP/DOWN button repeatedly will change the cruise set speed in single increments. Pressing and holding the button will increase or decrease the speed until the button is released.

Deactivating Cruise Mode

To deactivate cruise mode:

1. Release the throttle lever.
2. Press the cruise button.

Deactivation of cruise mode is indicated by:

– The CRUISE indicator will turn off.
– A BEEP will be heard.

NOTE: If the throttle lever is not fully released when the cruise button is pressed to deactivate cruise mode, the BEEP will not be heard and the cruise indicator will remain on. The speed limiting function of cruise mode will stay active until the throttle is fully released, then the BEEP will be heard and the cruise indicator will go out.

Slow Speed Mode

The Intelligent Throttle Control also allows for a Slow Speed Mode where the driver can adjust and set idle speed. This is useful when operating in slow speed zones where the driver must be especially attentive to possible obstacle avoidance.

The operator can select an idle speed set point (slow speed) between 1 and 5 (1.6 km/h to 11 km/h (1 MPH to 7 MPH)).

If you accelerate above approximately 14 km/h (9 MPH), Slow Speed Mode will be deactivated and the engine will return to its normal idle RPM when the throttle is released.

Should a situation arise where the operator must stop or accelerate quickly away from a hazardous situation, pull in the iBR lever, or pull in on the throttle lever to deactivate slow speed mode and regain normal control of the watercraft.

Activating Slow Speed Mode

To activate slow speed mode of operation:

1. Release the throttle lever to idle RPM.
2. Pull in and release the iBR lever to engage neutral.
3. Press and hold the cruise button for approximately 1 second.

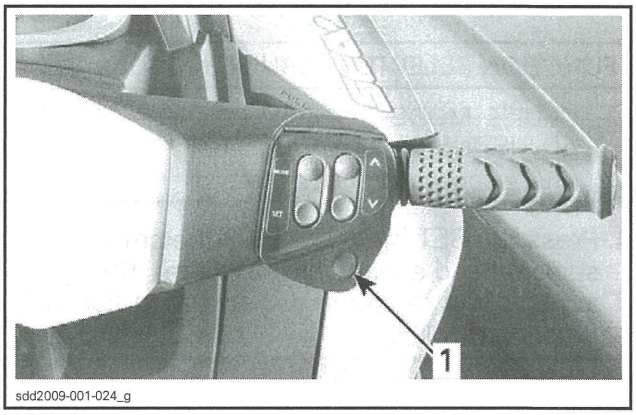

TYPICAL
1. CRUISE button

The CRUISE indicator will come on in the multifunction gauge to indicate cruise activation.

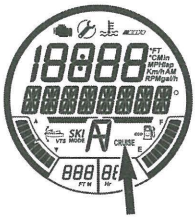

CRUISE MODE INDICATOR

A scrolling message will appear in the multifunction display to specify that you are now in slow speed mode. The default slow speed set point of 1 will also come on for a few seconds in the numerical display.

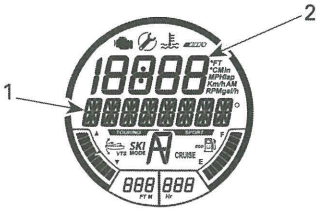

FUNCTION SELECTED - SLOW SPEED MODE

1. SLOW SPEED MODE message
2. Slow speed set point of "1" indication

NOTE: The scrolling SLOW SPEED MODE message repeats itself as long as slow speed mode is activated. The numerical display reverts back to the previous indication after a few seconds.

Changing Set Slow Speed

There are 5 slow speed set points available (1 through 5), 1 being the slowest.

To **increase** or **decrease** the slow speed set point, press the UP/DOWN button on the RH handlebar once, or repeatedly.

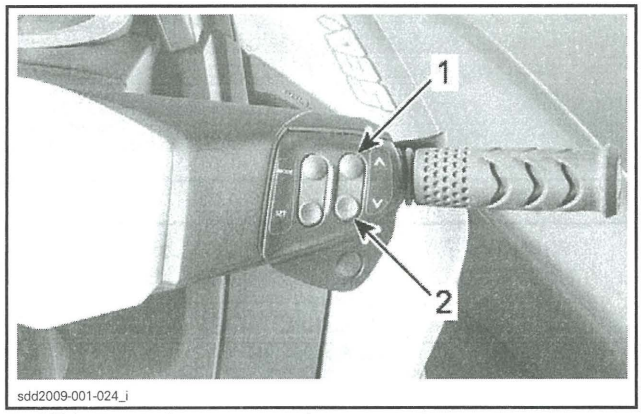

1. UP button to increase speed
2. DOWN button to decrease speed

While the UP/DOWN is being pressed to change the slow speed set point, the following will appear in the multifunction gauge.

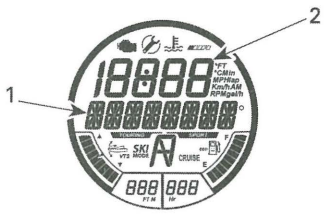

FUNCTION SELECTED - SLOW SPEED MODE
1. SLOW SPEED MODE - SPEED ADJUSTING message 2. Slow speed set point indication

The displays will revert back to their previous indication a few seconds after the last activation of the UP/DOWN button.

NOTE: As a reminder, the following message will scroll across the multifunction display periodically.

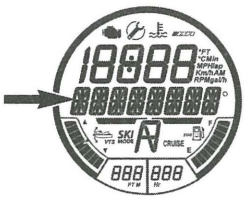

MESSAGE DISPLAYED
SLOW SPEED MODE ACTIVE

Deactivating Slow Speed Mode

Slow speed mode can be deactivated using any of the following methods:

- Pressing the cruise button.
- Depressing the iBR lever.
- Accelerating above the highest slow speed that can be set (approximately 14 km/h (9 MPH)).

When deactivating SLOW SPEED MODE:

- By pressing the cruise button, the iBR system maintains forward position.
- By pressing the iBR lever, the iBR system will shift to neutral position.

SLOW SPEED MODE deactivation will be indicated in the following manner:

1. The CRUISE indicator will go out
2. The scrolling SLOW SPEED MODE ACTIVE message will cease.

Ski Mode

Ski mode allows for repeated and precisely controlled launches, and a set towing speed, specifically for towing a skier or wake boarder.

Ski mode is not available if using a LEARNING key or a RENTAL key.

RAMP Function

The RAMP function offers a pre-programmed setting for launching and accelerating the PWCr.

RAMP 1 provides:

- Slowest launch (smoothest)
- Slowest acceleration rate
- Slowest TARGET SPEED range.

RAMP 5 provides:

- Quickest launch
- Quickest acceleration rate
- Highest TARGET SPEED range.

TARGET SPEED Function

The TARGET SPEED function limits the maximum towing speed.

Once the RAMP has been selected, an average PWC target speed for that RAMP will be visible in the numerical display.

The average speed displayed and the speed range available is dependent on the RAMP selected. The higher the RAMP number, the higher the speed range.

The operator may increase or decrease the target speed to any value within the selected RAMP speed range.

NOTE: If the desired target speed cannot be set in the selected RAMP, you must exit then reengage SKI MODE, and select a different RAMP.

Engaging and Using Ski Mode

To engage ski mode, carry out the following steps:

1. Release throttle lever.

NOTE: Ski mode cannot be engaged if the throttle lever is not fully released, and if CRUISE or SLOW SPEED mode is engaged. A message will appear in the multifunction display advising you of the situation. Follow the instructions in the display.

2. Press the MODE button repeatedly until SKI MODE is visible in the multifunction display.

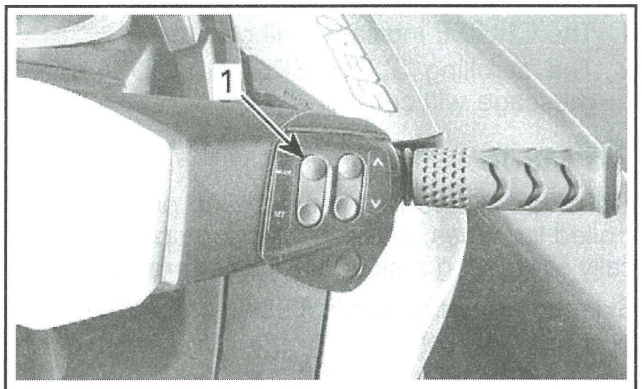

TYPICAL
1. MODE button

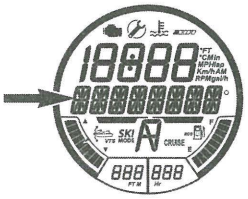

MESSAGE DISPLAYED
SKI MODE

3. Press SET to enter the function. The multifunction gauge message will change to RAMP. The RAMP setting number will be visible in the numerical display.

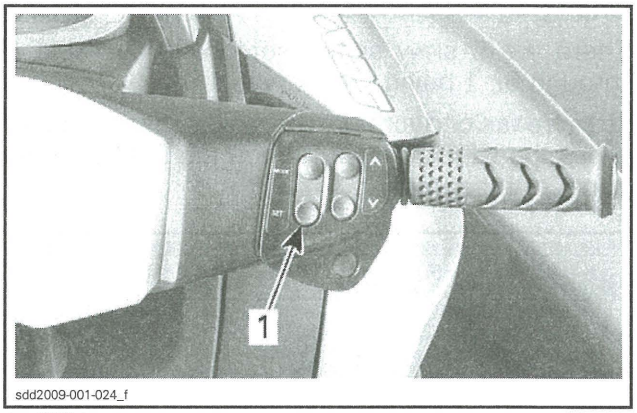

1. SET button

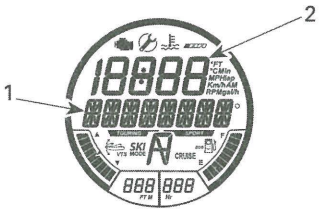

FIRST SETTING AVAILABLE - RAMP
1. RAMP message 2. Ramp setting

4. To change the RAMP setting, press the UP/DOWN button until the desired ramp number is visible in the numerical display.
5. Press SET to lock in the ramp setting; the multifunction display will change to the TARGET SPEED setting function.

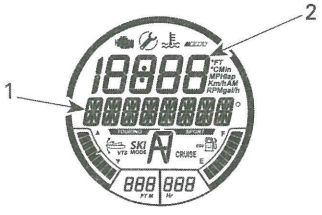

SECOND SETTING AVAILABLE - TARGET SPEED
1. TARGET SPEED message 2. Target speed setting

6. Press the UP/DOWN button to increase or decrease the target speed.
7. Press SET to lock in the target speed; the display will switch to the following scrolling message.

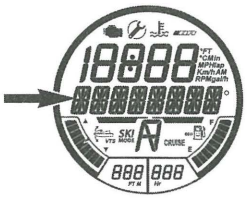

MESSAGE DISPLAYED
SKI MODE_PRESS_SET_TO START OR MODE TO EXIT

NOTE: A BEEP will be heard every 5 seconds as a SKI MODE engaged reminder.

8. Press SET again; the following confirmation message will appear.

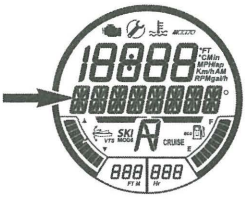

MESSAGE DISPLAYED
SKI MODE ACTIVE_PRESS_MODE_AND RETURN TO IDLE TO CANCEL

NOTE: The SKI MODE indicator will also come ON and blink when ski mode becomes active. It will be ON steady when the operator pulls and holds the throttle lever all the way in to the handlebar.



SKI MODE INDICATOR

9. To launch the PWC in ski mode, pull in and hold the throttle lever all the way to the handlebar grip. The PWC will accelerate to the set TARGET SPEED and the SKI MODE indicator will be on steady.
10. To increase or decrease the TARGET SPEED during a ski run, press the UP/DOWN button, **do not** release the throttle lever.

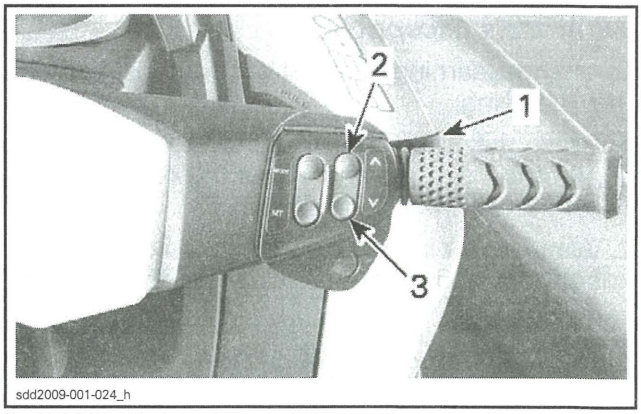

sdd2009-001-024_h

1. *Hold throttle lever in*
2. *Press UP button to increase speed*
3. *Press DOWN button to decrease speed*

NOTE: If the throttle is partly released during a ski run, the SKI MODE indicator light will start to blink and the speed adjust function using the UP/DOWN arrow button will be deactivated.

11. To end a ski run or to pick up a fallen skier or wakeboarder, fully release the throttle to regain normal throttle control.

NOTE: When the throttle is fully released during ski mode operation, the system returns to ski mode engaged status. The SKI MODE indicator light will go out but, ski mode will remain engaged and a message to that effect will reappear in the multifunction display.

12. Press SET to reactivate ski mode and fully pull in the throttle lever to start another ski run.

Deactivating Ski Mode

To exit ski mode at any given point during the ski mode setting process, press the MODE button.

To end a ski run and completely deactivate ski mode, release the throttle to idle, then press the MODE button.

Learning Key and Rental Key Modes

Both learning and rental keys provide a mode of operation whereby engine power and speed is limited.

There are 5 speed settings available for the learning key mode. By default, the key modes are preset to the speed setting (3).

NOTE: Changing key settings is only available when the engine is not running.

Changing Learning Key Speed Settings

GTS Models

The default learning key setting is 74 km/h (46 MPH) and cannot be changed on these models.

All Models Except GTS

To change learning or rental key settings, carry out the following:

1. Press the START/STOP button to wake up the electrical system and install the NORMAL key on the engine cut-off switch.
2. Wait for the information center to complete its self-test and display the key recognition message.
3. Press the MODE button repeatedly until KEY MODE is visible in the digital screen of the information center.

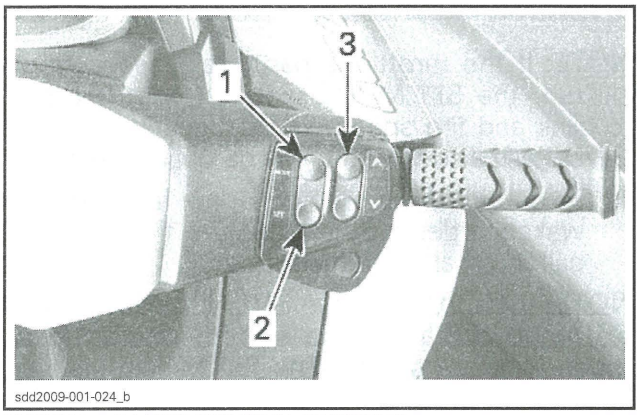

TYPICAL - GAUGE CONTROL BUTTONS
1. MODE button
2. SET button
3. UP/DOWN button

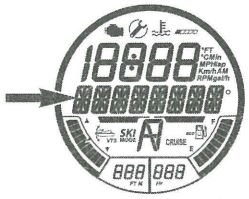

MESSAGE DISPLAYED
KEY MODE

4. Press the SET button once to enable learning key mode setting function. The display will change to L-Key.

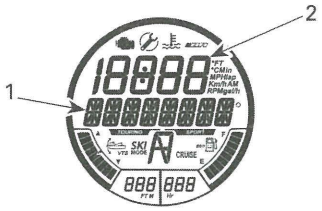

FUNCTION SELECTED - LEARNING KEY
1. L-KEY message 2. Learning key setting

5. Press the UP/DOWN button to toggle the key setting between 1 and 5. See table for speed limitations according to setting.
6. Press the SET button once to save the setting, twice to exit the function, or simply wait for the function to time-out. The change in key setting will automatically be saved.

NOTE: The key speed setting is applicable to any key of the same type used on a specific watercraft. The same key type used on a different watercraft may therefore have a different key speed setting.

D.E.S.S. KEY TYPE	KEY SPEED SETTING	APPROX. MAX. SPEED
Learning key	5	80 km/h (50 MPH)
	4	74 km/h (46 MPH)
	3	68 km/h (42 MPH)
	2	58 km/h (36 MPH)
	1	51 km/h (32 MPH)

MULTIFUNCTION DISPLAY MESSAGES

Displayed messages are subject to the functions as applicable to watercraft model.

USUAL MESSAGES	
WELCOME ABOARD SEA-DOO	Power up display
READING KEY	Key reading indication
NORMAL KEY	Normal key detected
LEARNING KEY	Learning key detected
RENTAL KEY	Rental key detected
DISPLAY	Display menu for numerical display indication
DEPTH	Water depth indication selection
RPM	RPM indication selection
SPEED	Watercraft speed indication selection
ENGINE TEMP	Engine temp selection
ALTITUDE	Altitude selection (from GPS)
TOP SPEED	Top speed selection
AVG SPEED	Average speed selection
TOP RPM	Maximum RPM selection
AVG RPM	Average RPM selection
FUNCTION CANNOT BE ENGAGED	Message when system cannot enter a specific function
CLOCK	Clock function
CHANGE CLOCK OFFSET	Clock setting function
FUEL CONSUMPTION	Menu for selecting fuel consumption display
INSTANT FUEL FLOW	Used to display instantaneous fuel consumption
AVERAGE FUEL FLOW	Used to display average fuel consumption since last reset
DISTANCE TO EMPTY	Display distance available based on fuel remaining in tank and instant fuel consumption
TIME TO EMPTY	Display time to empty based on fuel remaining in tank and instant fuel consumption
VTS MODE	VTS preset menu
PRESET 1	For changing PRESET 1
PRESET 2	For changing PRESET 2
FAULT CODE	Fault code menu for viewing codes
NO ACTIVE FAULT CODE	No fault codes are active.
KEY MODE	KEY mode menu
L-KEY	For changing learning key setting
SETTINGS	For accessing DOCK mode, iBR-OVR, and CLOCK settings
DOCK MODE	DOCK mode function menu
DOCK MODE OFF	DOCK mode disable
DOCK MODE AUTO	DOCK mode enable

USUAL MESSAGES	
DOCK MODE ON	Suspension moving to DOCK position
DOUBLE CLICK DOWN FOR DOCK MODE	Message scrolling while in DOCK mode menu
iBR-OVR	iBR mode function menu
OVR OFF	iBR-OVR function disable
OVR ON	iBR-OVR function enable
SLOW SPEED MODE ACTIVE	Slow speed mode acknowledgement
IS MODE	IS mode function
PRESS UP OR DOWN TO SET SUSPENSION	Message scrolling when adjusting suspension setting
PRESS UP OR DOWN TO ADJUST SUSPENSION	Message when selecting suspension setting
DOUBLE CLICK UP FOR AUTO MODE	Message scrolling when activating auto MODE
ENTERING SPORT MODE - INCREASED ACCELERATION - INSTRUCT PASSENGERS TO HOLD - PRESS SPORT BUTTON	Message when SPORT mode is selected
SPORT MODE ACTIVATED	Message when SPORT mode is activated
SPORT MODE - RETURN TO IDLE TO ACTIVATE	Message when SPORT mode cannot be activated, engine not at idle
SPORT MODE ACTIVE - RETURN TO IDLE TO CANCEL	Message when SPORT mode is in use
SPORT MODE DEACTIVATED	Message when user first returns to TOURING mode
SKI MODE	WAKE and SKI function
PLEASE EXIT SLOW SPEED MODE FIRST	Message when a rider attempts to enter SKI mode when already in SLOW SPEED mode
RAMP	Ramp curve or level of acceleration from 1 to 5
TARGET SPEED	Speed requested for SKI mode
SKI MODE - PRESS SET TO START OR MODE TO EXIT	SKI mode is unarmed but ready, the PWC is at idle
SKI MODE ARMED - RETURN TO IDLE OR PRESS MODE TO CANCEL	SKI mode is ready but the PWC is not at idle, the system is at standby
SKI MODE ACTIVE - PRESS MODE AND RETURN TO IDLE TO CANCEL	Message scrolling when SKI mode is active
SKI MODE - SPEED ADJUSTING	Message scrolling when adjusting SKI mode speed setting
SKI MODE ACTIVE - RETURN TO IDLE TO CANCEL	Message scrolling when the user pressed MODE to disengage but didn't return to idle
LAP TIME	Lap timer function
ECO MODE	Menu option for selecting FUEL ECONOMY MODE
ECO MODE ACTIVE - RETURN TO IDLE TO CANCEL	FUEL ECONOMY MODE is active, scrolling instruction for deactivation
SLOW SPEED MODE ACTIVE	Message when SLOW SPEED mode is in operation
SLOW SPEED MODE ACTIVATED	Message when SLOW SPEED mode is selected

USUAL MESSAGES	
SLOW SPEED MODE - SPEED ADJUSTING	Message scrolling when adjusting slow speed TARGET speed setting
PLEASE EXIT SLOW SPEED MODE FIRST	Message scrolling if SLOW SPEED mode is still active when trying to engage CRUISE mode
CRUISE MODE ACTIVE	Message when CRUISE mode is in operation
CRUISE MODE ACTIVATED	Message when CRUISE mode is selected
CRUISE MODE - SPEED ADJUSTING	Message scrolling when adjusting cruise TARGET speed setting
CRUISE MODE - SELECT SPEED - PRESS SET TO ACCEPT OR MODE TO EXIT	Message scrolling when selecting speed.
PLEASE EXIT CRUISE MODE FIRST	Message scrolling if CRUISE mode still active when trying to engage SLOW SPEED mode
LOW FUEL	Message when approximately 25% fuel remaining
NEUTRAL ADJUSTMENT	Neutral adjustment

FAULT MESSAGES	
WRONG KEY	Wrong key selected for model
RIGHT KEYPAD ERROR	MODE/SET, UP/DOWN arrow button malfunction
LOW OIL PRESSURE	Engine low oil pressure detected
HIGH EXHAUST TEMPERATURE	High exhaust temperature detected
HIGH ENGINE TEMPERATURE	High engine temperature detected
CHECK ENGINE	Engine system malfunction or maintenance required
HIGH BATTERY VOLTAGE	High battery voltage detected
LOW BATTERY VOLTAGE	Low battery voltage detected
LIMP HOME MODE	Major fault detected, engine power limited
FUEL SENSOR DEFECTIVE	Fuel level sensor fault
CALIBRATION CHECKSUM ERROR	Cluster programming corrupted, need to be re-flashed using B.U.D.S.
MAINTENANCE REQUIRED	Watercraft maintenance required
DEPTH SOUNDER MODULE COMMUNICATION PROBLEM	Error message if depth sounder is disconnected while riding
iS MODULE COMMUNICATION PROBLEM	Error message if communication with the suspension module is lost while riding
iBR MODULE ERROR	Error message if communication with the iBR module is lost while riding
OTAS DEFECTIVE – MAINTENANCE REQUIRED	OTAS is not correctly adjusted

TROUBLESHOOTING

DIAGNOSTIC TIPS

NOTE: It is a good practice to check for fault codes using B.U.D.S. software as a first troubleshooting step. Refer to *COMMUNICATION TOOLS AND B.U.D.S.* subsection.

IMPORTANT: When troubleshooting an electrical system fault, check battery condition, cables and connections first.

Electrical System Activation

1. Press the START/STOP button.

NOTE: Pressing the START/STOP button without the tether cord (D.E.S.S. key) installed on the engine cut-off switch will turn on electrical power without starting the engine; the information center will cycle through a self-test function and shut off its display after a few seconds. However, the electrical system will stay powered up for approximately three minutes after the START button was pressed.

2. Install the tether cord on the engine cut-off switch to activate ECM and Information Center when testing procedures require a component or system to be supplied with electrical power.

IMPORTANT: When B.U.D.S. is being used, the ECM will stop communicating with B.U.D.S. approximately 3 minutes after the START button is pressed. Therefore, operations with B.U.D.S. will be interrupted. To reestablish communication, briefly press the START button. **Do not hold** the START button to avoid engine starting.

Circuit Testing

Check the related-circuit fuse condition with a fuse tester or ohmmeter (a visual inspection could lead to a wrong conclusion).

Electrical Connection Inspection

When replacing an electric or electronic component, always check electrical connections. Make sure they are tight, make good contact, and are corrosion-free. Dirty, loose or corroded contacts are poor conductors and are often the source of a system or component malfunction.

Pay particular attention to ensure that pins are not bent or pushed out of their connectors.

Ensure all wire terminals are properly crimped on wires, and connector housings are properly fastened.

Check for signs of moisture, corrosion or dullness. Clean pins properly and coat them with DIELECTRIC GREASE (P/N 293 550 004) or other appropriate lubricant when reassembling them, except if otherwise specified such as for the ECM connectors.

Pay attention to ground wires.

TROUBLESHOOTING GUIDELINES

Press the START/STOP button and install the tether cord on the engine cut-off switch.

NOTE: Information center should come on, cycle through its self test function, and stay on for approximately 3 minutes after which all electrical power will turn off.

Briefly press the START/STOP button every 3 minutes to reenergize the electrical system. Do not hold the START/STOP button to avoid engine starting.

NOTE: When troubleshooting using the following guidelines, it is important to remember that some indications, functions and features described may not apply to every PWC model, or may be available as an option.

Information Center "Does Not Turn ON"

If the information center does not turn ON when the START/STOP button is pressed, the power circuit or ground circuit to the information center is probably open.

iS Models

Double click the iS button to move the suspension to the up position. If the suspension does not move to the up position, the problem is related to the electrical power system. Refer to *POWER DISTRIBUTION AND GROUNDS* subsection.

If the suspension moves to the up position, the electrical power system is functioning normally.

All Models

Test the 3 A GAUGE/OTAS/CAPS fuse (fuse 12) in fuse box 1 (FB1).

If the fuse tests good, carry out an *INFORMATION CENTER INPUT VOLTAGE TEST.*

If the information center input voltage test is good, test for continuity of the gauge ground circuit (gauge connector pin 11 (BLACK wire) to the ground bus-bar (pin H7) in FB1.

Refer to *WIRING DIAGRAM* for circuit details.

Information Center Turns ON with Some Indications Missing

1. Connect to the latest applicable B.U.D.S. version, refer to *COMMUNICATION TOOLS AND B.U.D.S.* subsection.
2. Read the fault codes, refer to *DIAGNOSTIC AND FAULT CODES* subsection.

If a fault code is related to a communication problem, carry out a continuity test of the CAN bus wires between the applicable module and the CAN bus-bars in FB1. Refer to *WIRING DIAGRAM* and *CONTROLLER AREA NETWORK (CAN)* subsections.

NOTE: The information center, ECM, iS module, iBR module, and the diagnostic connector are linked together through CAN bus-bars in fuse box 1. If one wire of the two wire CAN bus system is open, communication will be slower than normal. Multiple fault codes may be generated and the ECM will put the watercraft in LIMP HOME mode.

If one module cannot be seen in B.U.D.S., the fault may be the wires that link the module to the CAN bus bars, or a problem internal to that module. Test the CAN bus wires from the faulty module to the CAN bus-bars in FB1 for continuity before assuming the problem is the module.

Information Center Goes Blank Except for:

- GPS indicator ON
- Compass ON (if watercraft moving)
- Fuel level ON
- iBR fault indicator light ON
- Indicated speed
- No other indications visible.

NOTE: GPS, compass and iBR indications are not applicable to GTS models.

There is no communication between the information center and all other modules (ECM, iS, iBR).

Carry out a continuity check of the CAN bus wires from the CAN bus-bars in FB1 to the information center (pins 2 and 3). Refer to the *WIRING DIAGRAM* and *CONTROLLER AREA NETWORK (CAN)* subsections for details.

If an open circuit is detected, carry out same test from the pin steering connector (pins 8 and 20).

All Indications ON Except for:

All Models Except GTS

- LAKE WATER TEMP indication
- VTS indication
- iBR position indication
- CHECK ENGINE light is on.

NOTE: The lake water temperature indication is only available for the GTX Limited iS 260 model.

The iBR CAN bus circuit is open or the iBR module is at fault.

NOTE: The ECM will generate several fault codes and engage LIMP HOME mode.

Carry out a continuity check of the CAN bus wires from the CAN bus-bars in FB1 to the iBR module (pins 2 and 3). Refer to the *WIRING DIAGRAM* and *CONTROLLER AREA NETWORK (CAN)* subsections for details.

NO RPM Indication and NO Engine Hour Display

If there is NO RPM indication and NO engine hour display, and the watercraft is in LIMP HOME mode, the CAN bus to the ECM is open.

Carry out a continuity check of the CAN bus wires from the CAN bus-bars in FB1 to the ECM module, connector "B" pins C1 and C2 (B-C1 and B-C2). Refer to the *WIRING DIAGRAM* and *CONTROLLER AREA NETWORK (CAN)* subsections for details.

NO iS Position Display

If there is no iS position display (suspension position), the iS module is at fault, or its CAN bus circuit is open.

Carry out a continuity check of the CAN bus wires from the CAN bus-bars in FB1 to the iS module (pins 2 and 3). Refer to the *WIRING DIAGRAM* for details.

NOTE: If communication with the iS module cannot be established when electrical power is first applied, the monitoring system assumes this is a normal situation (PWC not equipped with iS) and will not display an error message.

NO Fuel Level Indication

If there is no fuel level indication, test the fuel level sensor and its wiring circuit to the information center. Refer to *FUEL TANK AND FUEL PUMP* subsection.

NO Depth Gauge Indication

If there is no depth gauge indication available and the depth sounder active indicator is not on, refer to *DEPTH GAUGE* in this subsection.

NOTE: If communication with the depth sounder cannot be established when electrical power is first applied, the monitoring system assumes this is a normal situation (PWC not equipped with depth finder) and will not display an error message.

NO Speed or Compass Indication

All Models Except GTS

To obtain a speed or compass reading and to turn on the GPS indicator, the GPS requires a good uplink to at least three navigation satellites.

If there is no speed or compass indication, look for the GPS indicator icon. If the GPS indicator is off, either the GPS cannot uplink with the satellites, or the GPS system in the information center is at fault.

If another watercraft nearby displays a good GPS uplink (GPS indicator light on in cluster), the information center may need to be replaced.

NOTE: If the GPS uplink is lost while navigating at speed, the speedometer will provide an estimated speed indication based on other parameters. The compass indication will not be available until a good satellite uplink is reestablished.

Speed and Compass Indication Slow to Come ON

All Models Except GTS

When initially powering up the watercraft and driving away, the speed and compass indications may be slow to come on. This is normal as the GPS requires time to establish an uplink with the navigation satellites (cold start).

If the watercraft was run long enough to display the compass and speed indications, shut down for a short period of time and then restarted (hot start), the speed and compass indications should not take more than 30 seconds to come on.

If the speed and compass indications take more than 30 seconds to come on, test for the following:

- GPS fuse 4 in FB1
- Battery voltage at pin 1 of the information center
- Continuity of wire between information center (pin 1) and contact A5 of FB1.

NOTE: This circuit provides 12 Vdc to the GPS in the information center so that it memorizes the satellites it was linked to for a period of two hours. This allows the indications to be available within a few seconds of restarting the watercraft (hot start). After a two hour period, the GPS will have to reestablish new satellite links.

Beeper Does Not Function

The beeper is incorporated within the information center.

If no beep code is heard when installing the tether cord, first ensure ECM is powered. Refer to *ELECTRONIC FUEL INJECTION (EFI)* subsection.

In B.U.D.S., carry out the following:

- **Cluster Buzzer Test** on the cluster activation page
- Check for fault codes. Carry out service actions as applicable.

If the **Cluster Buzzer Test** failed, the ECM is powered, and the ECM and information center are communicating properly through the CAN bus, replace the information center.

PROCEDURES

INFORMATION CENTER

Information Center Self Test Function

When the START/STOP button is pressed momentarily and the vehicle powers up, all LCD segments and indicator lights in the information center will turn **ON for 3 seconds** (self test function). This self test function allows the driver time to ensure that all indications are functioning properly.

It also validates the information centers internal circuits, however, this does not validate proper operation of the individual external circuits and sensors that provide inputs to the information center.

If a system fault is detected by the ECM, the applicable message and/or indicator light will be displayed, and a beep code may be heard.

If the tether cord is not installed, the indications in the information center will shut off a few seconds after the self test function, but the electrical system power stays on for approximately 3 minutes. Installing the tether cord on the engine cut-off switch will turn the indications back on.

If the tether cord is installed, the cluster will stay on for approximately 3 minutes.

NOTE: If the START/STOP button is pressed and held without the tether cord installed, the information center will stay on as long as the START button is held.

Multifunction Gauge Setup

Clock Setting

All Models Except GTS

1. Press the MODE button repeatedly until SETTINGS is visible in the multifunction display.

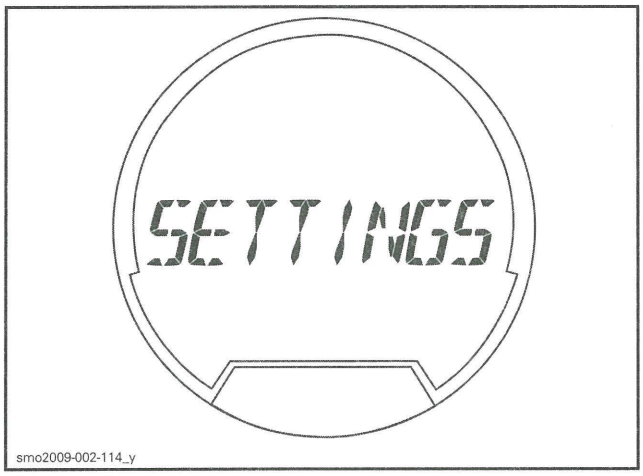

FUNCTION SELECTED: SETTINGS

2. Press the UP or DOWN arrow button repeatedly until CLOCK is visible.

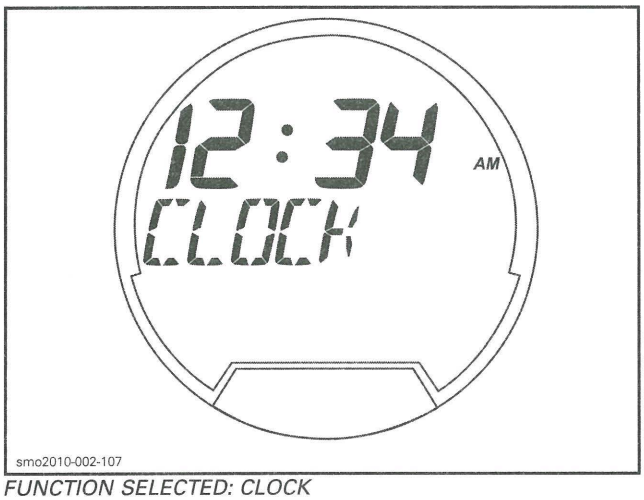

FUNCTION SELECTED: CLOCK

3. Press the SET button to enter the function. CHANGE CLOCK OFFSET message will be displayed.

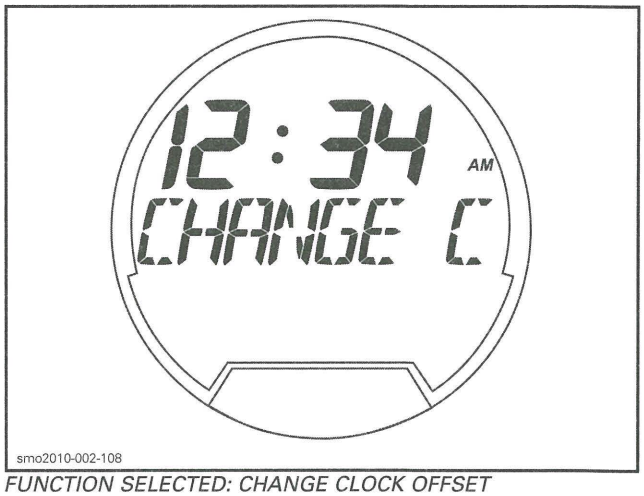

FUNCTION SELECTED: CHANGE CLOCK OFFSET

4. Press the UP or DOWN arrow button to adjust the clock to the correct local time.
5. Press the SET button to save the setting and return to the main display.

NOTE: The clock uses the GPS signal to maintain the appropriate time referenced to Greenwich Mean Time (GMT). When setting the clock, only the hour digits may be changed. For the clock to function, the GPS requires a good satellite uplink.

Units of Measurement and Language Setting

1. Connect vehicle to the latest applicable B.U.D.S. version, refer to the *COMMUNICATION TOOLS AND B.U.D.S.* subsection.
2. Press the START/STOP button to energize the electrical system.

NOTE: You will need to press the START button every three minutes or the electrical system will shut off.

3. Select the **Read Data** button.
4. Choose the **Setting** tab at the top of the page.

At the bottom LH side of the setting page, select the **Cluster** tab.

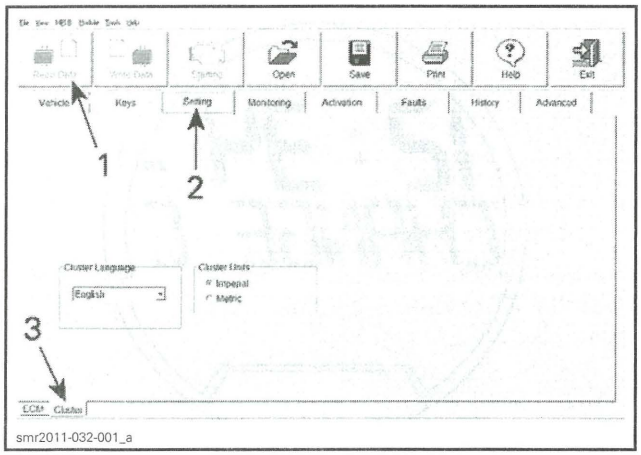

TYPICAL
1. *Read Data*
2. *Setting tab*
3. *Cluster tab*

In the **Cluster Language** field, choose the desired unit of language.

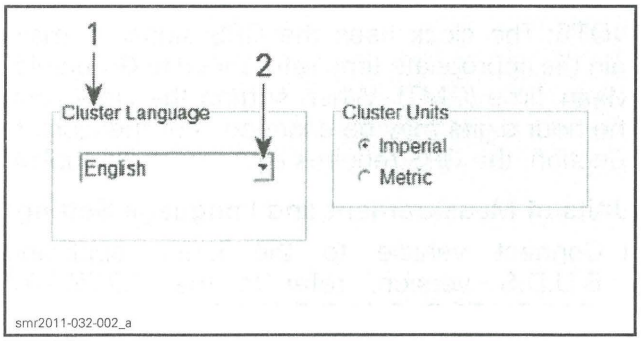

TYPICAL
1. *Cluster Language field*
2. *Click on this arrow to expand list of available languages*

In the **Cluster Units** field, choose the desired unit of measurement, **Imperial** or **Metric**.

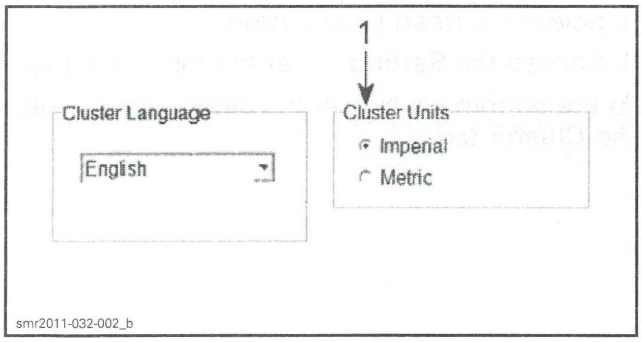

TYPICAL
1. *Cluster Units field*

Clearing the Maintenance Reminder Indicators

When the watercraft, engine or supercharger are due for maintenance, the maintenance reminder indicator will come on, and a scrolling **MAINTENANCE REQUIRED** or **SUPERCHARGER MAINTENANCE REQUIRED** message will scroll in the digital screen. These maintenance reminders must be cleared using B.U.D.S.

1. Connect vehicle to the latest applicable B.U.D.S. version, refer to the *COMMUNICATION TOOLS AND B.U.D.S.* subsection.
2. Press the START/STOP button to energize the electrical system.

NOTE: You will need to press the START button every three minutes or the electrical system will shut off.

3. Select the **Read Data** button.
4. Choose the **Vehicle** tab at the top of the page.
5. At the bottom RH side of the vehicle page in the **Last Service** field, choose **Reset Service/"Maint"** or **Reset Supercharger Maintenance** button as applicable.

NOTE: If the supercharger maintenance was carried out before the reminder appeared in the information center, the supercharger maintenance reminder must be reset in order to reset the supercharger maintenance hour counter and prevent the reminder from appearing prematurely.

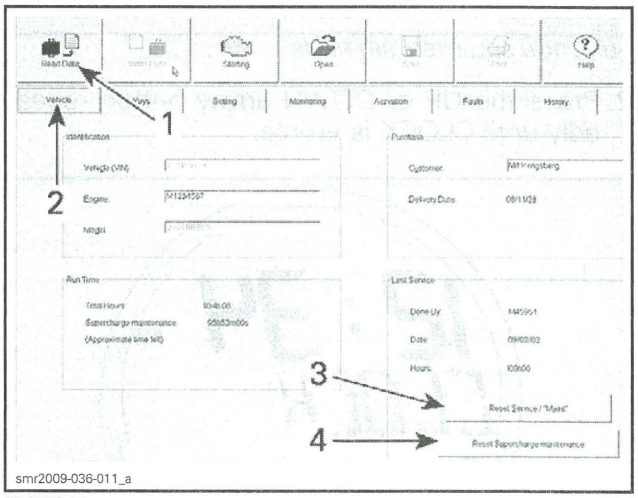

TYPICAL
1. *Read Data*
2. *Vehicle tab*
3. *Reset Service/"Maint" button*
4. *Reset Supercharger Maintenance button*

Information Center Pin-Out

NOTE: Depending on watercraft model and installed accessories, some multifunction gauge connector pins may not be used.

INFORMATION CENTER PIN-OUT	
PIN NO.	FUNCTION
1	GPS back-up power
2	CAN HI
3	CAN LOW
4	Spare (buzzer external GND)
5	Spare (buzzer external GND)
6	Not used
7	Cruise switch signal Vdc (SET switch for GTS models)
8	Spare (digital input)
9	Not used
10	Cruise switch ground (SET switch for GTS models)
11	Gauge GND
12	Gauge input Vdc power
13	VTS switch signal (UP or DOWN)
14	ECO/SPORT switch signal (ECO or SPORT)
15	VTS switch common
16	UP or DOWN arrow switch signal
17	MODE and SET switch signal
18	MODE/SET, UP/DOWN arrow switch common
19	Fuel level sensor VDC signal
20	Fuel level sensor GND

Information Center Input Voltage Test (at Gauge Connector)

GTS, GTI and WAKE

1. Remove the gauge bezel, refer to *BODY* subsection.

RXT, GTX and WAKE Pro

2. Remove the gauge support cover, refer to *INFORMATION CENTER REMOVAL* in this subsection.

All Models

3. Disconnect the gauge connector.

NOTICE **Pull on connector with your hand as you pull the connector lock out with the screwdriver. Do not twist the screwdriver.**

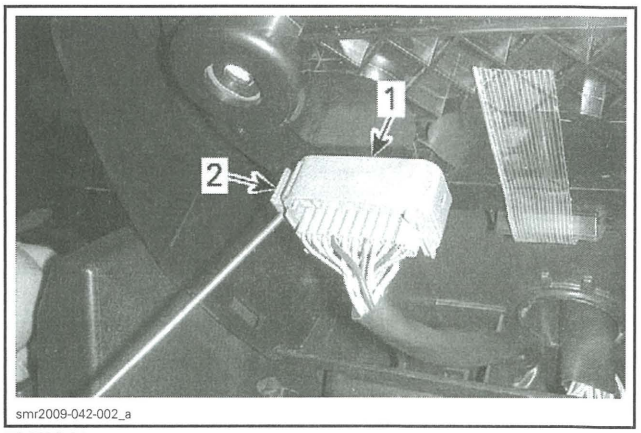

TYPICAL
1. *Gauge connector*
2. *Pull out to unlock connector*

4. Set the FLUKE 115 MULTIMETER (P/N 529 035 868) to Vdc.
5. Press the START button and install the tether cord on the engine cut-off switch.
6. Measure the information center input voltage as per following table.

INPUT VOLTAGE TEST AT GAUGE CONNECTOR		
PROBE		VOLTAGE
Pin 12 (VIOLET)	Pin 11 (BLACK)	Battery voltage
Pin 12 (VIOLET)	Battery ground	

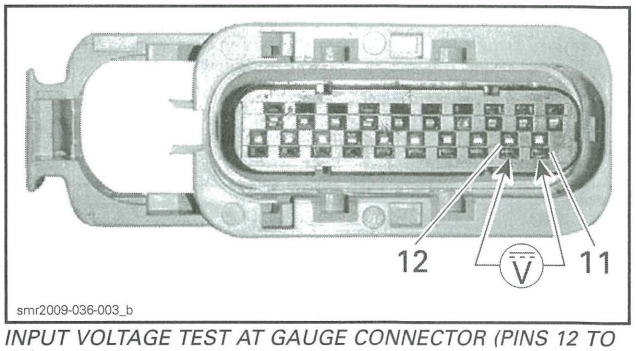

INPUT VOLTAGE TEST AT GAUGE CONNECTOR (PINS 12 TO 11)

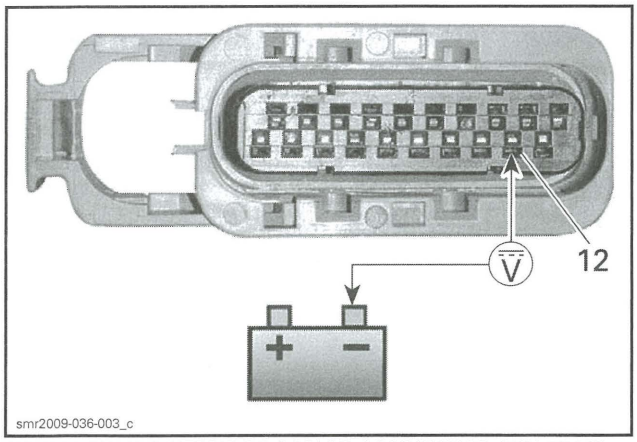

INPUT VOLTAGE TEST AT GAUGE CONNECTOR (PIN 12 TO BATTERY GROUND)

If battery voltage is measured as specified, replace the information center.

If battery voltage is measured to battery ground but not to pin 11, carry out a *CONTINUITY TEST OF GAUGE GROUND WIRE* circuit from the gauge connector to the ground bus-bar contact in FB1 as described further in this subsection.

7. If battery voltage is not measured at the gauge connector, carry out a *INFORMATION CENTER INPUT VOLTAGE TEST (AT STEERING CONNECTOR).*

Information Center Input Voltage Test (at Steering Connector)

1. Open front storage compartment cover.

GTS, GTI and Wake

2. Remove battery access panels.

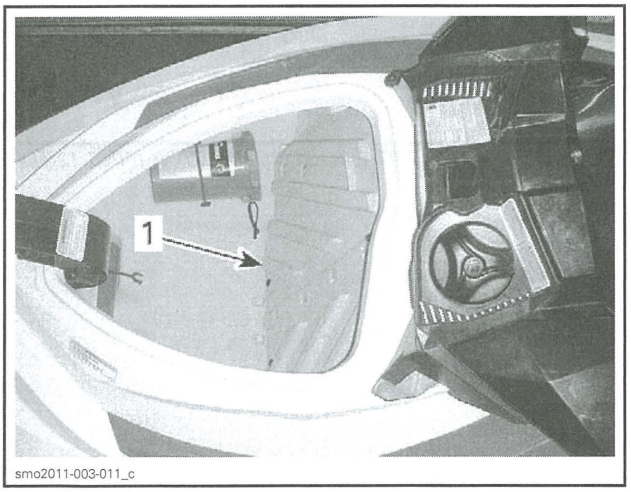

1. Battery access panels

RXT, GTX and WAKE Pro

3. Remove front storage bin.

RXT and GTX Models Without Suspension

4. Reach into the front storage compartment and remove the front air ventilation hoses.

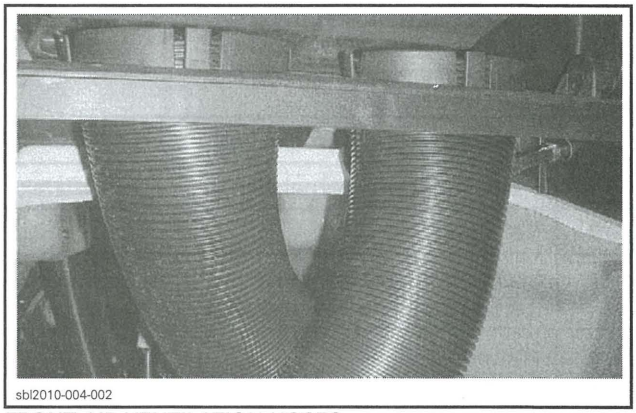

FRONT AIR VENTILATION HOSES

All Models

5. From under the steering support area, disconnect the 24-pin steering connector.

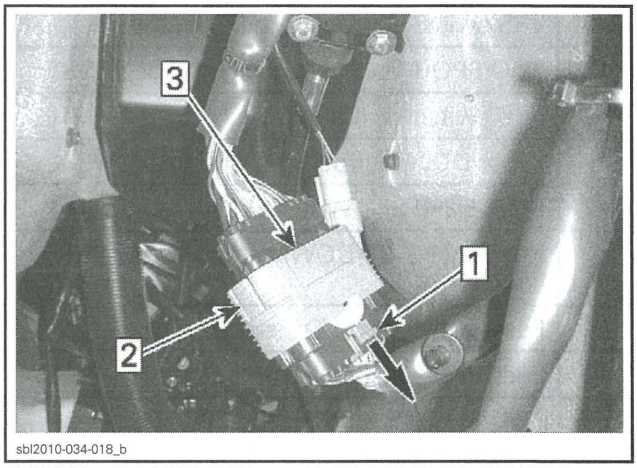

TYPICAL - DISCONNECT 24-PIN STEERING CONNECTOR
Step 1: Pull out safety lock
Step 2: Press in on release tab
Step 3: Pull locking collar down

6. Connect the DIAGNOSTIC HARNESS (P/N 529 036 188) to make an in-line connection between the disconnected connectors.

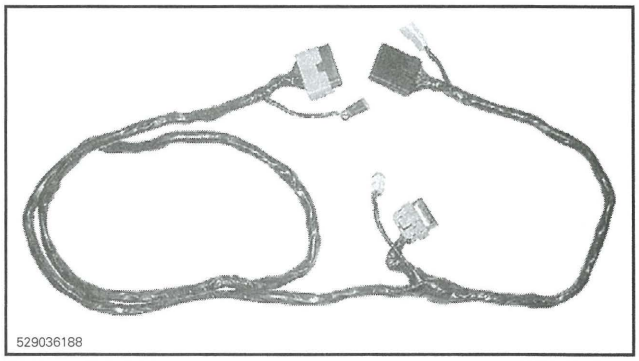

7. Press the START/STOP switch and install the tether cord on the engine cut-off switch.
8. Carry out an input voltage test at the steering connector (vehicle harness side) as per following table.

INFORMATION CENTER INPUT VOLTAGE TEST (STEERING CONNECTOR)		
TEST CONNECTOR ON DIAGNOSTIC HARNESS		VOLTAGE
Pin 24 (VIOLET)	Pin 1 (BLACK)	Battery voltage
Pin 24 (VIOLET)	Battery ground	

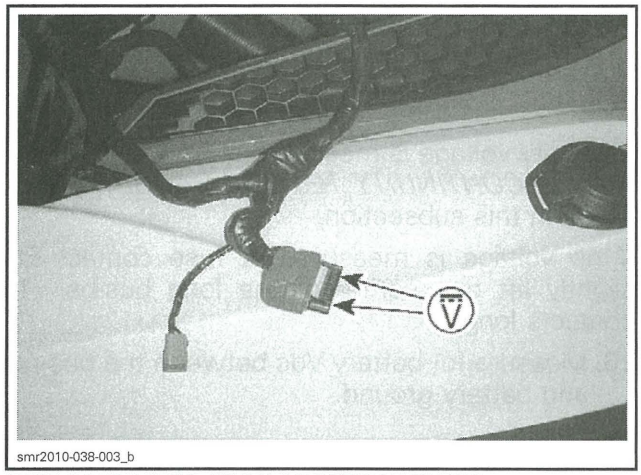

smr2010-038-003_b

TEST CONNECTOR OF DIAGNOSTIC HARNESS

If battery voltage is read at steering connector (vehicle harness side) as specified in previous table, but was not measured to pin 11 at the gauge connector (gauge ground wire), repair or replace the BLACK ground wire between the gauge connector and the steering connector.

If battery voltage is measured to battery ground but not to pin 1, carry out a *CONTINUITY TEST OF GAUGE GROUND WIRE* described further in this subsection.

If no voltage is measured, carry out the following steps.

GTS, GTI and WAKE Models

9. Remove the battery access panel at the back of the storage compartment.

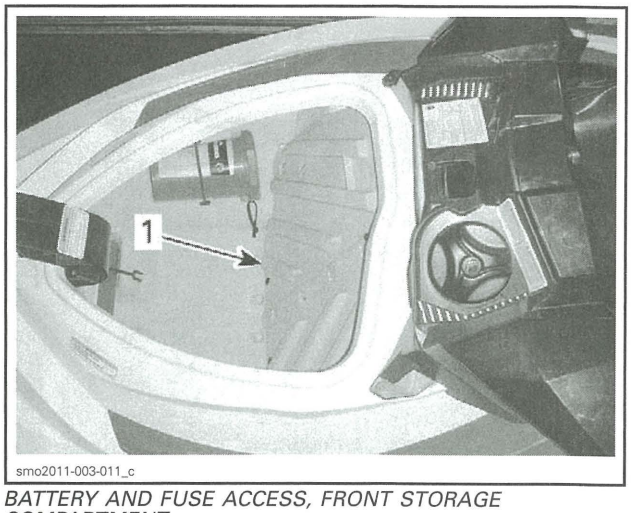

smo2011-003-011_c

BATTERY AND FUSE ACCESS, FRONT STORAGE COMPARTMENT
1. Battery access panel

RXT and GTX Models with Suspension

10. Open the boarding platform and remove the RH storage bin.

RXT, GTX (Without Suspension) and Wake Pro Models

11. Remove the RH access panel on the boarding platform.

All Models

12. Using the FLUKE 115 MULTIMETER (P/N 529 035 868) set to Vdc, measure battery voltage at the battery terminals.

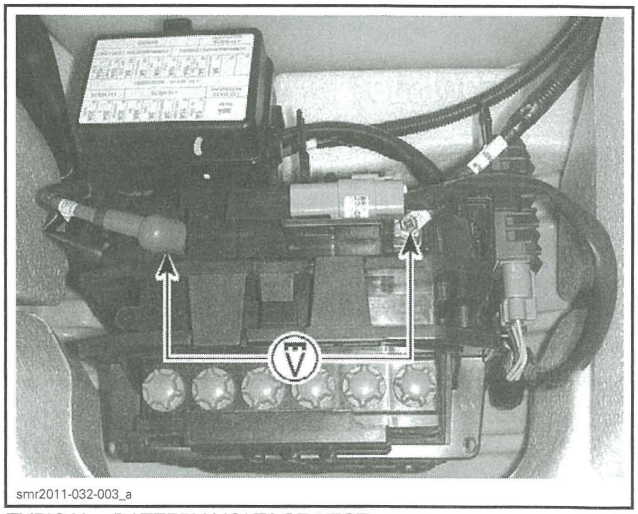

smr2011-032-003_a

TYPICAL - BATTERY VOLTAGE TEST

13. Remove fuse box cover.

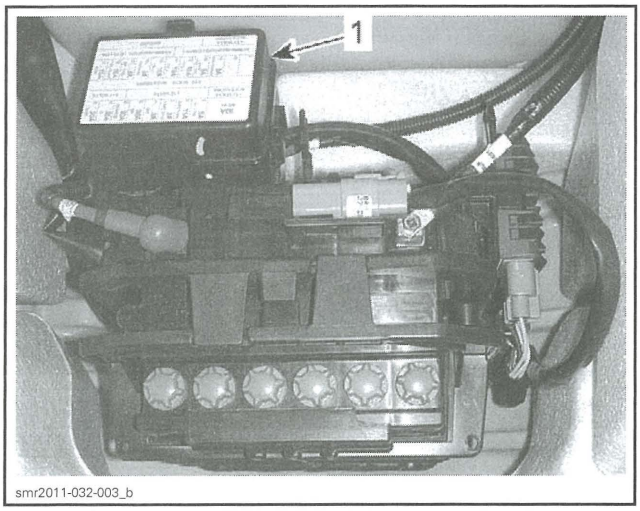

1. Fuse box cover

14. Press the START/STOP button to energize electrical system and install the tether cord.
15. Test for battery voltage between each of the terminals atop the GAUGE/OTAS/CAPS fuse (12) and battery ground as per following table.

VOLTAGE TEST AT FB1			
GAUGE FUSE	TEST PROBES		READING
Fuse pin numbers	E8	Battery (-) post	Battery Vdc
	F8		

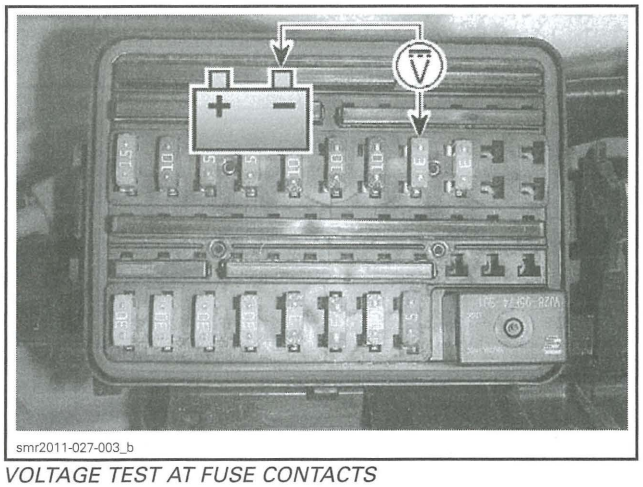

VOLTAGE TEST AT FUSE CONTACTS

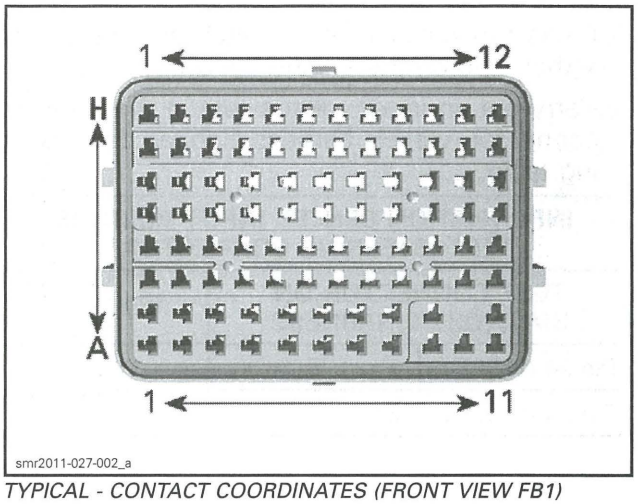

TYPICAL - CONTACT COORDINATES (FRONT VIEW FB1)

If battery voltage is measured at E8 but not at F8 (with fuse installed), replace the fuse.

If battery voltage is measured at fuse contact E8, refer to *CONTINUITY TEST OF GAUGE POWER WIRE* in this subsection.

If no voltage is measured at fuse contact E8, slightly lift one corner of the long bus-bar (12 contacts long).

16. Measure for battery Vdc between the bus-bar and battery ground.

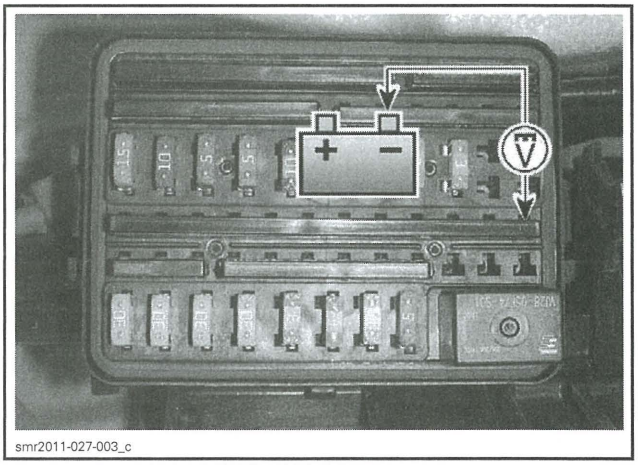

VOLTAGE TEST AT LONG BUS-BAR

If battery voltage is measured at the long bus-bar, repair or replace the wire jumper D8 to E8 (behind fuse box).

Continuity Test of Gauge Power Wire

1. Remove tether cord from engine cut-off switch.
2. Disconnect gauge connector.

NOTICE **Pull connector lock out sideways. Do not twist the screwdriver.**

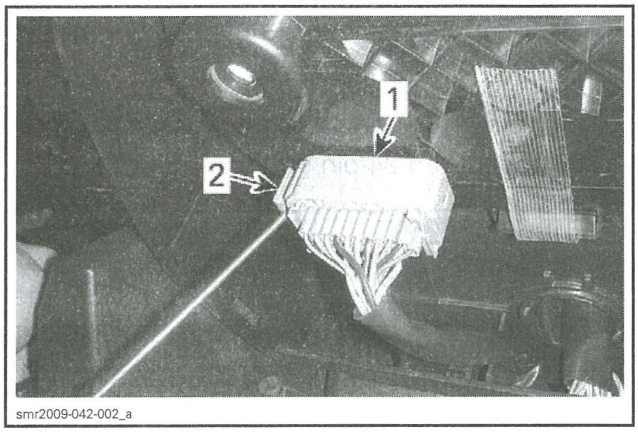

TYPICAL
1. *Gauge connector*
2. *Pull out to unlock connector*

3. Disconnect 24-pin steering connector.

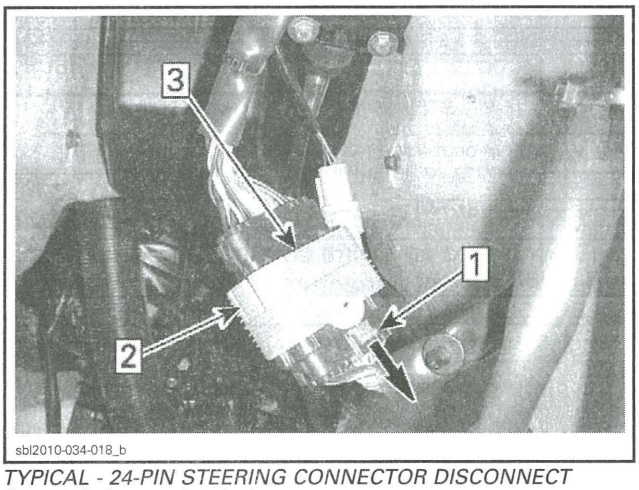

TYPICAL - 24-PIN STEERING CONNECTOR DISCONNECT
Step 1: Pull out safety lock
Step 2: Press in on release tab
Step 3: Pull locking collar down

4. Connect the DIAGNOSTIC HARNESS (P/N 529 036 188) to make an in-line connection between the disconnected connectors.

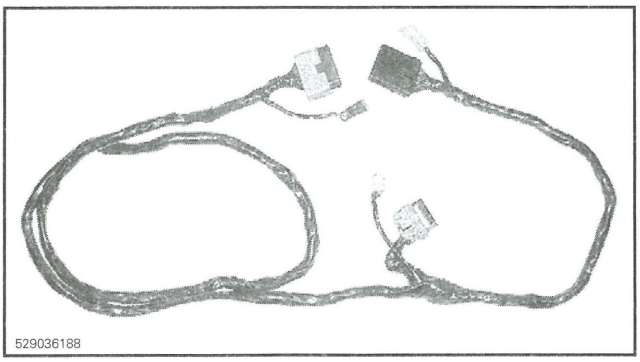

5. Remove the gauge fuse in FB1.

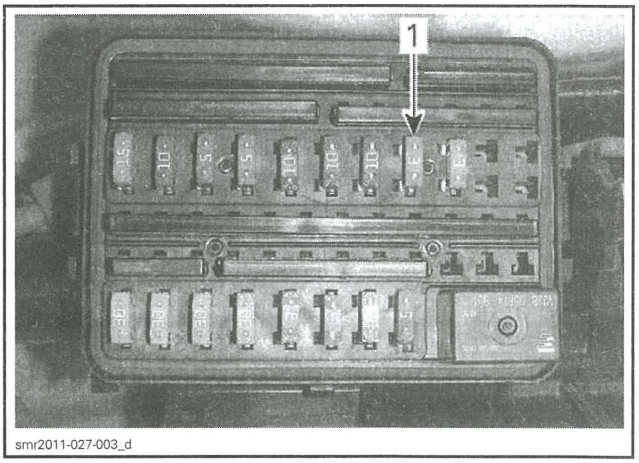

FB1
1. *Remove gauge fuse (F1)*

6. Set FLUKE 115 MULTIMETER (P/N 529 035 868) to Ω setting.



7. Test the information center power wire continuity as per following table.

CONTINUITY TEST OF GAUGE POWER WIRE			
GAUGE CONNECTOR	TEST CONNECTOR ON DIAGNOSTIC HARNESS	FUSE BOX 1	READING
Pin 12 (VIOLET)	Pin 24 (VIOLET)	–	Close to 0 Ω
Pin 12 (VIOLET)	–	F8	
–	Pin 24 (VIOLET)	F8	

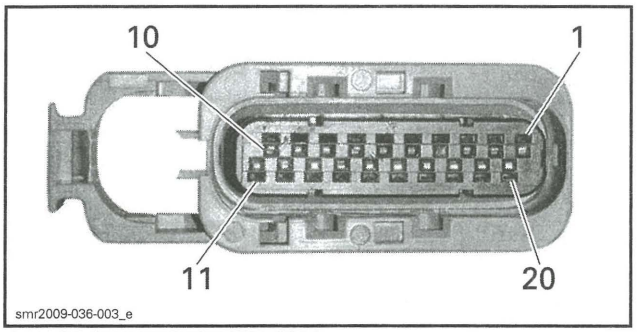

GAUGE CONNECTOR PIN-OUT

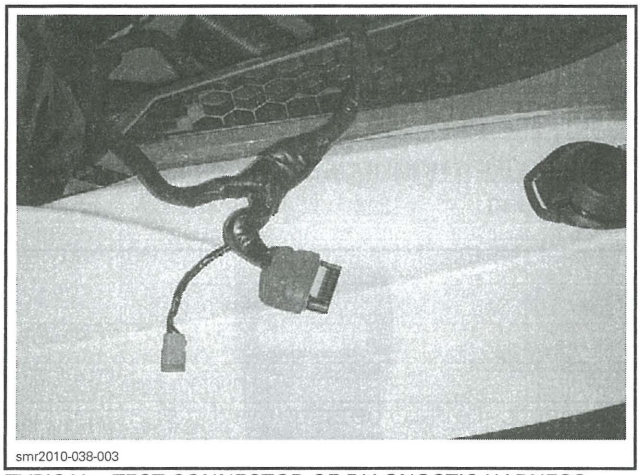

TYPICAL - TEST CONNECTOR OF DIAGNOSTIC HARNESS

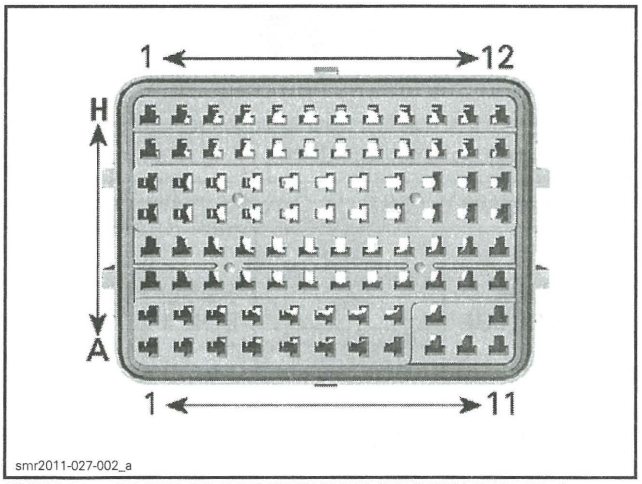

TYPICAL - CONTACT COORDINATES (FRONT VIEW FB1)

8. If an open circuit is measured, test the following:

CONTINUITY TEST OF GAUGE POWER WIRE		
FUSE BOX 1	TEST CONNECTOR ON DIAGNOSTIC HARNESS	READING
F8 to H9	–	Close to 0 Ω
H9 to H11	–	
H11	Pin 24 (VIOLET)	

9. Repair or replace wiring/connectors as required.

Continuity Test of Gauge Ground Wire

1. Disconnect the 24-pin steering connector.

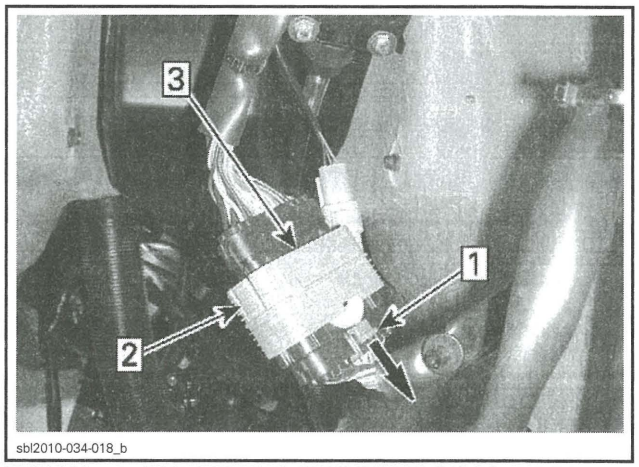

TYPICAL - 24-PIN STEERING CONNECTOR DISCONNECT
Step 1: Pull out safety lock
Step 2: Press in on release tab
Step 3: Pull locking collar down

2. Connect the DIAGNOSTIC HARNESS (P/N 529 036 188) to make an in-line connection between the disconnected connectors.

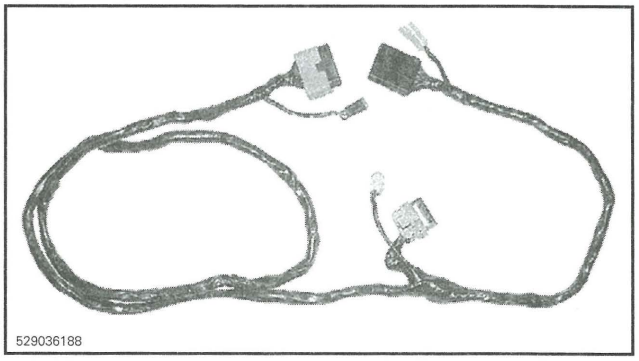

3. Remove the ground bus-bar in the fuse box.

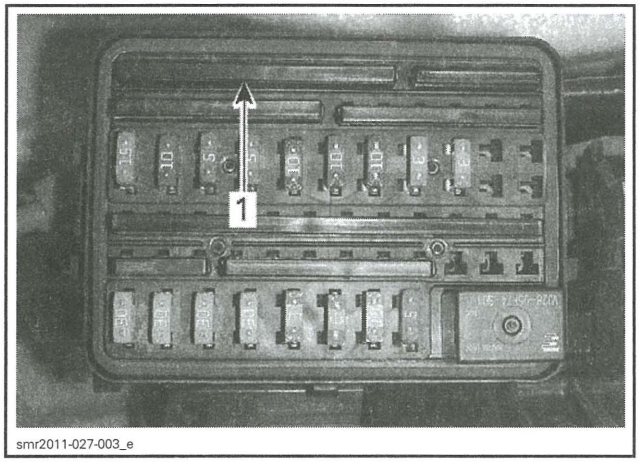

TYPICAL
1. Ground bus bar

4. Set FLUKE 115 MULTIMETER (P/N 529 035 868) to Ω selection and carry out a continuity test as per following table. Refer to the *WIRING DIAGRAM* for circuit details.



CONTINUITY TEST OF GAUGE GROUND WIRE			
MULTIMETER PROBES			READING
GAUGE CONNECTOR	TEST CONNECTOR ON DIAGNOSTIC HARNESS	FUSE BOX	
Pin 11 (BLACK)	–	H7	Close to 0 Ω
Pin 11 (BLACK)	Pin 1 (BLACK)	–	
–	Pin 1 (BLACK)	H7	

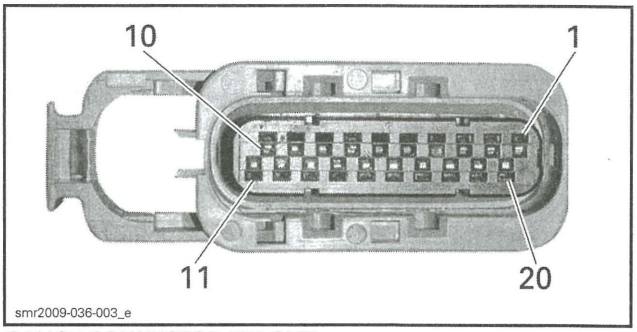

GAUGE CONNECTOR PIN-OUT

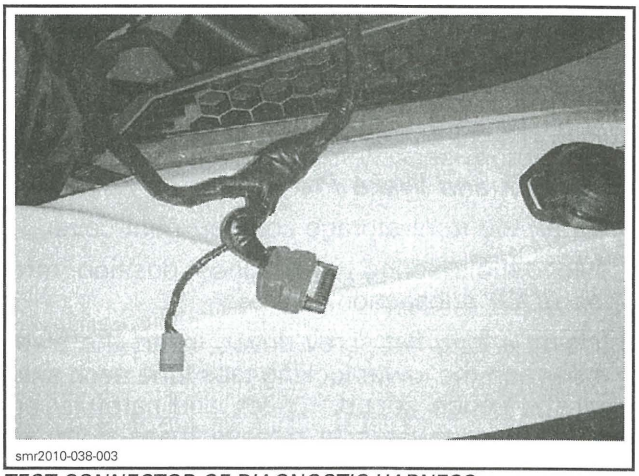

TEST CONNECTOR OF DIAGNOSTIC HARNESS

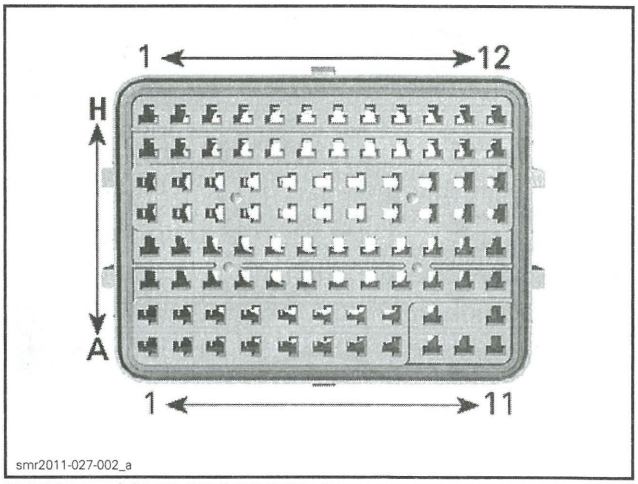

TYPICAL - CONTACT COORDINATES (FRONT VIEW FB1)

5. Repair wiring and connectors as required.

Information Center Removal

GTS, GTI, RXP-X and WAKE

1. Remove the bezel that covers the information center and mirrors, refer to *BODY* subsection.
2. Press in on the two retaining tabs at the top of the information center.

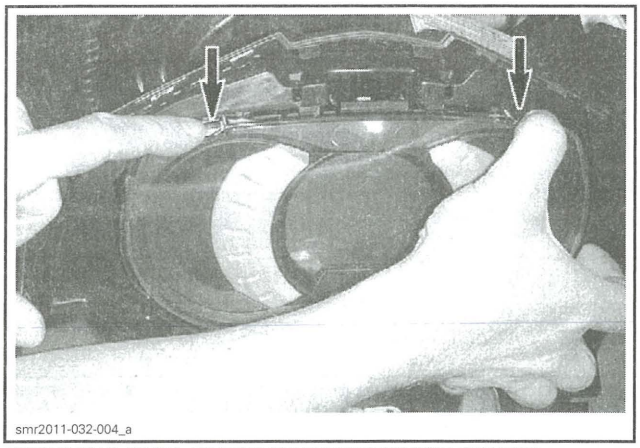
smr2011-032-004_a

RETAINING TABS AT TOP OF INFORMATION CENTER

3. Pull information center out of console.

GTX, RTX and Wake Pro

1. Open the front storage compartment cover.
2. Move the steering to its highest position, refer to *BODY* subsection.
3. Using a long flat screwdriver, insert the blade between the lower locking tabs (one each side) of the gauge support cover, and carefully pry the tabs outwards to release them from the gauge support.

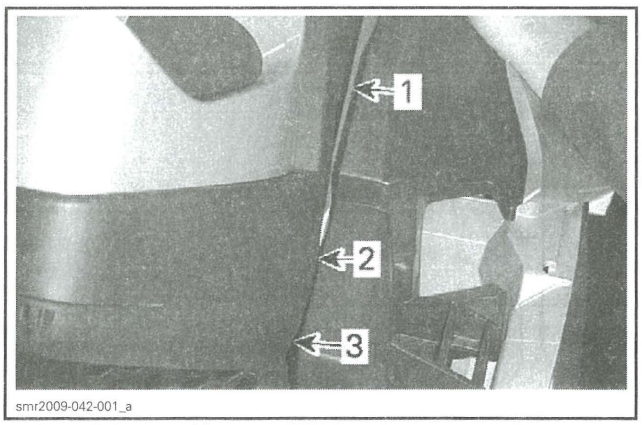

smr2009-042-001_a

1. *Long flat screwdriver*
2. *Locking tab*
3. *Gauge support cover*

4. Pull the bottom of the panel outwards to remove it from the gauge support.

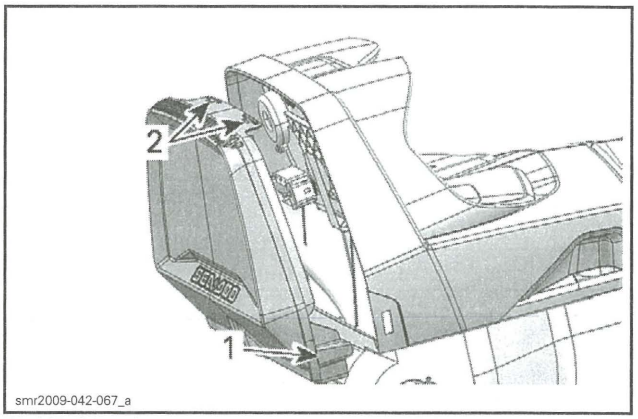

smr2009-042-067_a

1. *LH side tab*
2. *Upper retaining tabs*

5. Disconnect the gauge connector.

NOTICE **Pull connector lock out sideways. Do not twist the screwdriver.**

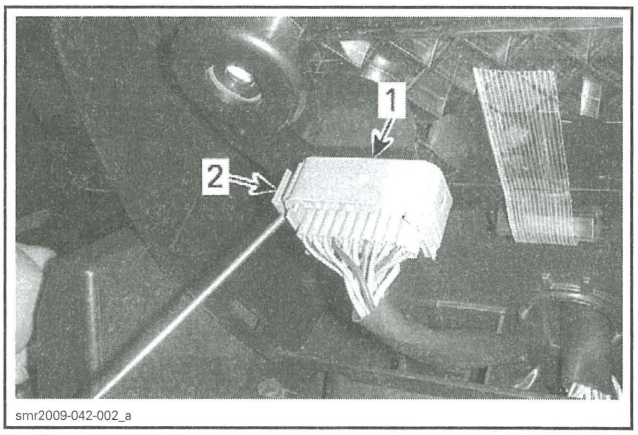

smr2009-042-002_a

1. *Gauge connector*
2. *Pull out to unlock*

6. Insert a flat screwdriver between the upper gauge locking tab and gauge support.

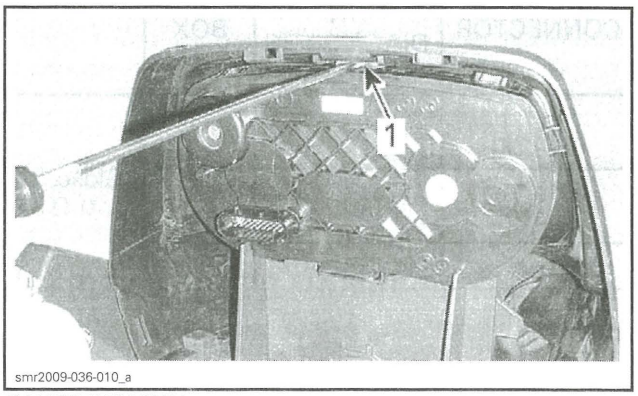

smr2009-036-010_a

GAUGE REMOVAL
1. *Insert screwdriver here*

7. Hold back of the gauge with one hand and carefully compress the retaining tab to release the information center from the gauge support.

Information Center Installation

Installation of the information center is the reverse of the removal procedure. However, pay attention to the following.

1. Apply a small amount of DIELECTRIC GREASE (P/N 293 550 004) to the gauge connector pins.
2. Reconnect gauge connector and ensure proper operation of gauge.
3. Insert and align the bottom of the gauge into the support first, then push the top into the support and ensure it properly locks into the retaining tab.

GTX, RTX and Wake Pro

4. When reinstalling the gauge support cover, first insert the top of the cover into the support. Then align the bottom of the cover with the locking tabs on the outside of the gauge support and push it in until it snaps back in place.

All Models

NOTE: If you are installing a replacement information center, refer to *INFORMATION CENTER REPLACEMENT* in this subsection.

Information Center Replacement

All Models

NOTE: Replacement information centers are delivered already programmed.

After the information center has been replaced, connect the watercraft to the latest applicable B.U.D.S. version and carry out any updates (if required). Refer to *COMMUNICATION TOOLS AND B.U.D.S.* subsection.

Once the information center has been updated (if required), select the applicable settings as described in *SETTING LANGUAGE AND UNITS OF MEASUREMENT* in this subsection.

GAUGE SUPPORT (RXT, GTX AND WAKE PRO)

Gauge Support Removal

1. Move steering to its upper most position.
2. Using a long flat screwdriver, unlatch both sides of gauge support cover.

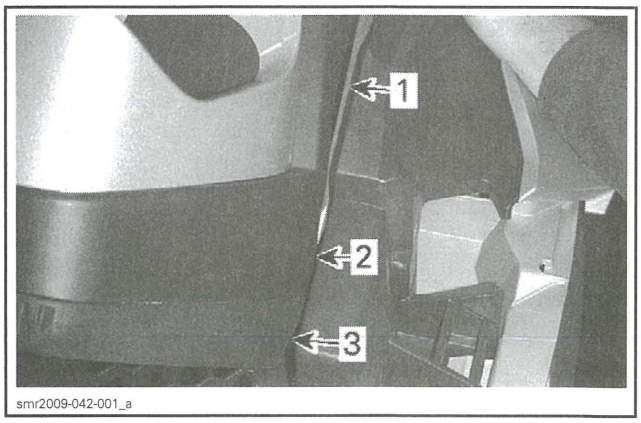

smr2009-042-001_a

1. Long screwdriver
2. Locking tab
3. Gauge support cover

3. Remove the cover.

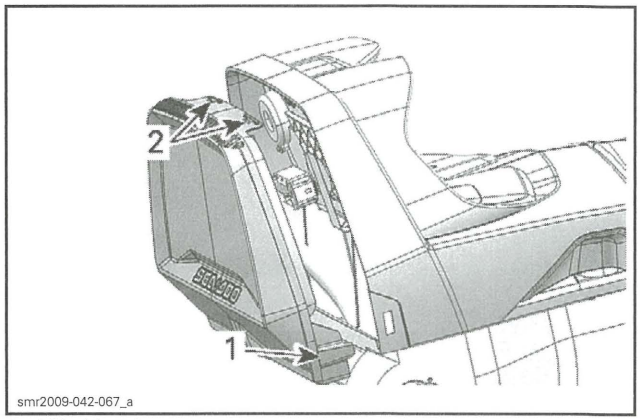

smr2009-042-067_a

1. LH side tab
2. Upper retaining latches

4. Disconnect the gauge connector.

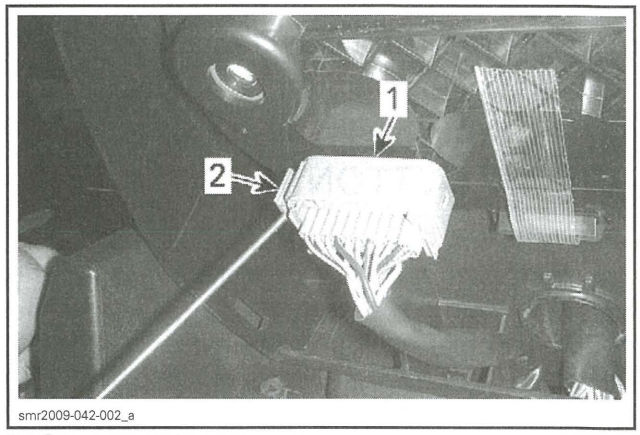

smr2009-042-002_a

1. Gauge connector
2. Slide out gauge connector tab to unlock

5. Using a small screwdriver, unlock back end of gauge support by pushing on tabs on each side of the steering column.

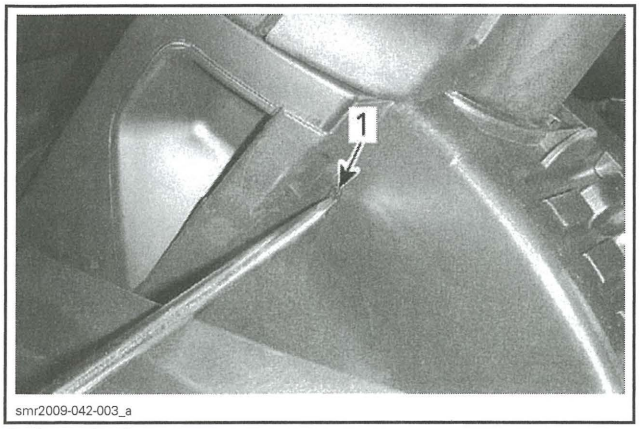

1. Inner latches

6. Remove gauge support by pulling out its forward tabs (one on each side), then pulling up on the support.

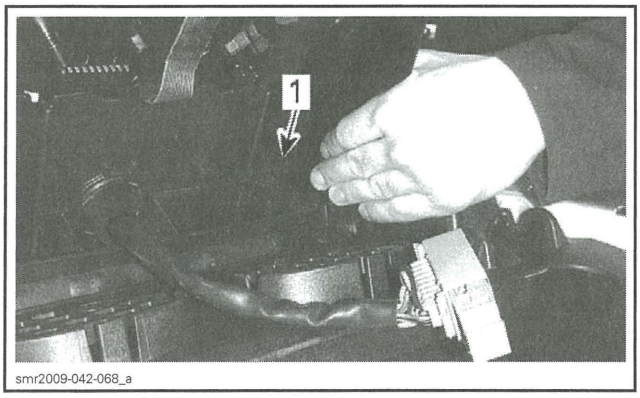

1. Pull out locking tab

Gauge Support Installation

1. Reverse the removal procedure.
2. Ensure proper operation of gauge once reconnected.

MODE/SET AND UP/DOWN ARROW BUTTONS

Overview

The MODE/SET and UP/DOWN arrow buttons assembly contains a series of 4 diodes for the MODE and SET switches, and another 4 diodes for the UP/DOWN arrow switches. Refer to *WIRING DIAGRAM* for simplified diagram of switches.

The center wire to the switches (pin C), is common to both sides of the switch assembly (somewhat like a ground wire). The other two wires (pins A and B), act as signal wires to the information center for each set of switches. They actually each form one branch of an electronic circuit within the information center.

Each diode (in circuit) drops a nominal 0.6 Vdc when conducting electricity. If the circuit current passes through all four diodes (say MODE and SET switches open), a drop of 2.4 Vdc would be measured across the 4 the diodes (pin B to pin C). This voltage drop of 2.4 Vdc measured at pin B tells the gauge the MODE and SET switches are open.

If the MODE switch is pressed, 2 diodes are bypassed. The remaining two diodes in the circuit drop 1.2 Vdc (at pin B).

If the SET switch is pressed, 1 diode is bypassed. The remaining three diodes in the circuit drop 1.8 Vdc (at pin B).

The gauge senses these voltages through pin 17 of the gauge connector, and interprets them as signals that tell it which switch is activated.

If the command signal generated by the closure of a switch concerns another module, a circuit within the gauge will translate it to CAN protocol and transmit it through the CAN bus. The applicable module will react to the command, carry out the function, and transmit the result back through the CAN bus.

The information center will use the signals from the switches and the transmitted information from the other modules, convert them to an indication, and cancel the command signal it sent out once the function has been carried out.

Command signals from the MODE and SET switches are used by the information center only.

The UP/DOWN arrow switch commands are used by the gauge for certain functions and settings. They will also be translated and sent out through the CAN bus to be used by the ECM for the CRUISE, SKI mode and SLOW SPEED functions for increasing or decreasing speed when the functions are active, and by the iBR for iBR gate positioning in SLOW SPEED mode of operation.

The UP/DOWN switches are also used for VTS trim on RXT 215, GTX 155, GTI SE 130 and 155, and WAKE models.

NOTE: The voltages stated previously vary slightly depending on the actual voltage applied to the circuit and the current flow through the diodes. When using a Fluke 115 multimeter for testing in diode test mode, the voltage and current applied by the multimeter are lower than in circuit. The quality of probe contact, the actual probes and leads, and the precision of the meter calibration will all affect the results, which will most likely be slightly lower than nominal values stated.

MODE/SET and UP/DOWN Arrow Buttons Test Using B.U.D.S.

1. Connect the watercraft to the latest applicable B.U.D.S. version. Refer to *COMMUNICATION TOOLS AND B.U.D.S.*
2. Press the START/STOP button to energize the electrical system.

NOTE: You will need to press the START button every three minutes or the electrical system will shut off.

3. Select the **Read Data** button.
4. Choose the **Monitoring** tab at the top of the page.
5. At the bottom LH side of the monitoring page, select the **Cluster** tab.

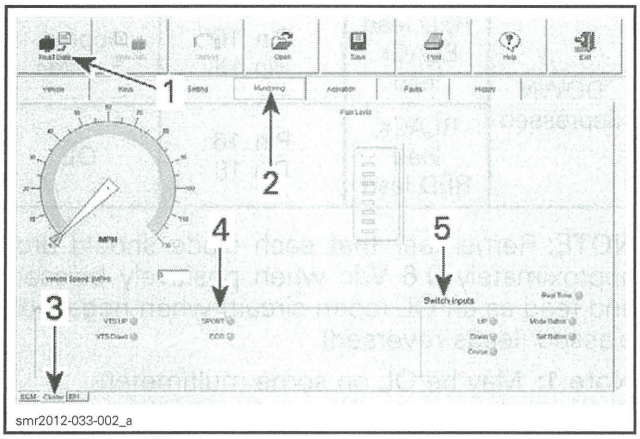

smr2012-033-002_a

1. *Read Data button*
2. *Monitoring tab*
3. *Cluster tab*
4. *LH switch inputs field*
5. *RH switch inputs field*

6. Press each of the MODE/SET and UP/DOWN arrow buttons and look for the applicable indicator light to come on in the **Switch inputs** field on lower RH side of the cluster page (Mode, Set, Up or Down).

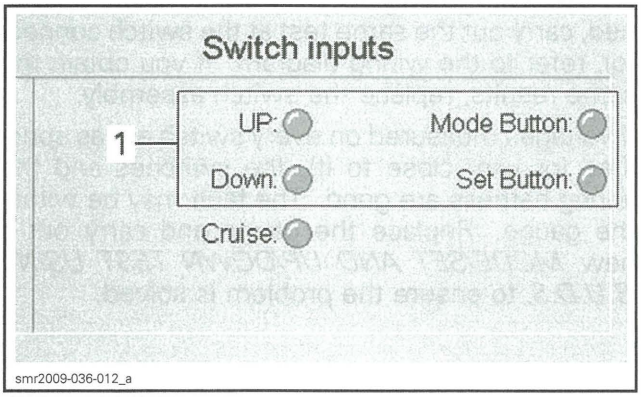

smr2009-036-012_a

SWITCH INPUTS
1. *MODE/SET and UP/DOWN arrow button indicator lights*

If each of the gauge button indicator lights come on when the applicable switch is pressed, the problem may be related to the information center.

If one or all of the indicator lights does not come on, refer to *MODE/SET AND UP/DOWN ARROW SWITCH TEST USING A MULTIMETER.*

MODE/SET and UP/DOWN Switch Test Using a Multimeter

GTI and WAKE

1. Remove the information center from the console, refer to *INFORMATION CENTER REMOVAL (GTI AND WAKE)* in this subsection.

RXT, GTX and WAKE PRO

2. Remove the gauge support cover, refer to *INFORMATION CENTER REMOVAL (RXT, GTX AND WAKE PRO)* in this subsection.

All Models

3. Disconnect the gauge connector.

NOTICE **Pull connector lock out. Do not twist the screwdriver.**

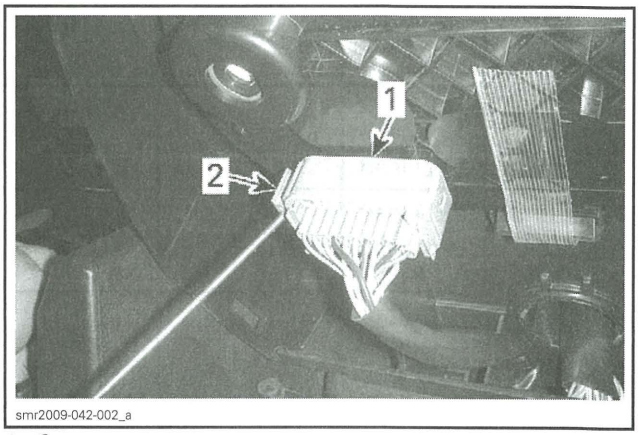

smr2009-042-002_a

1. *Gauge connector*
2. *Pull out to unlock connector*

4. Set the FLUKE 115 MULTIMETER (P/N 529 035 868) to the diode test function.

NOTE: It is important to set the multimeter to the diode check function when testing the MODE/SET and UP/DOWN arrow switches as it contain diodes.

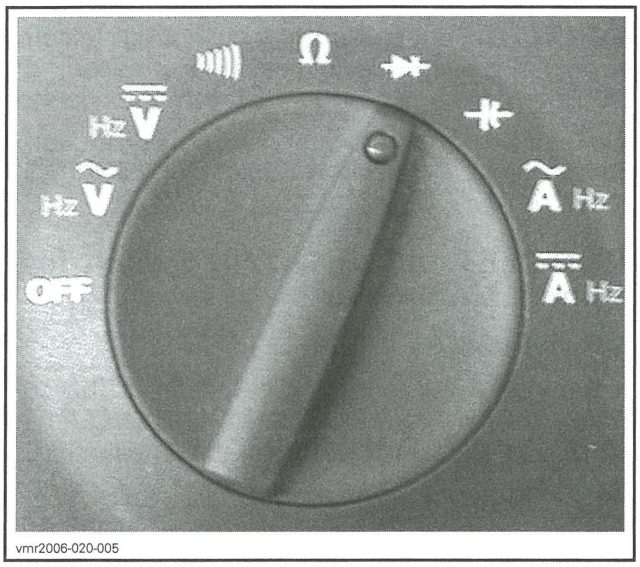

vmr2006-020-005

5. Test the MODE/SET and UP/DOWN arrow switches as per following tables.

MODE/SET SWITCH TEST			
SWITCH POSITION	FLUKE 115	GAUGE CONNECTOR	VOLTAGE
Switch released	RED lead BLACK lead	Pin 17 Pin 18	Approx. 2 Vdc or OL (see note 1)
	BLACK lead RED lead	Pin 17 Pin 18	OL
MODE depressed	RED lead BLACK lead	Pin 17 Pin 18	Approx. 1.1 Vdc
	BLACK lead RED lead	Pin 17 Pin 18	OL
SET depressed	BLACK lead RED lead	Pin 17 Pin 18	Approx. 1.6 Vdc
	BLACK lead RED lead	Pin 17 Pin 18	OL

UP/DOWN ARROW SWITCH TEST			
SWITCH POSITION	FLUKE 115	GAUGE CONNECTOR	VOLTAGE
Switch released	RED lead BLACK lead	Pin 16 Pin 18	Approx. 2 Vdc or OL (see note 1)
	BLACK lead RED lead	Pin 16 Pin 18	OL
UP depressed	RED lead BLACK lead	Pin 16 Pin 18	Approx. 1.1 Vdc
	BLACK lead RED lead	Pin 16 Pin 18	OL
DOWN depressed	RED lead BLACK lead	Pin 16 Pin 18	Approx. 1.6 Vdc
	BLACK lead RED lead	Pin 16 Pin 18	OL

NOTE: Remember that each diode should drop approximately 0.6 Vdc when positively biassed, and read as an OL (open circuit) when negatively biassed (leads reversed).

Note 1: May be OL on some multimeters.
If the readings are correct when testing with the switch depressed UP and DOWN, while it was OL with the switch released, then the switch is functional.

When measuring between pins 17 and 18, or 16 and 18, if an OL is obtained with both positive and negative diode biassing, test the continuity of each wire between the gauge and switch assembly. If continuity is good, replace the switch assembly.

If any reading is significantly different than specified, carry out the same test at the switch connector, refer to the wiring diagram. If you obtain the same results, replace the switch assembly.

If voltages measured on every switch are as specified (or very close to it), the switches and the wiring harness are good. The fault may be within the gauge. Replace the gauge and carry out a new *MODE/SET AND UP/DOWN TEST USING B.U.D.S.* to ensure the problem is solved.

MODE/SET and UP/DOWN Switch Assembly Replacement (Except X Package)

1. Remove steering cover, refer to *STEERING AND O.T.A.S.* subsection.
2. Disconnect connector from switch assembly.

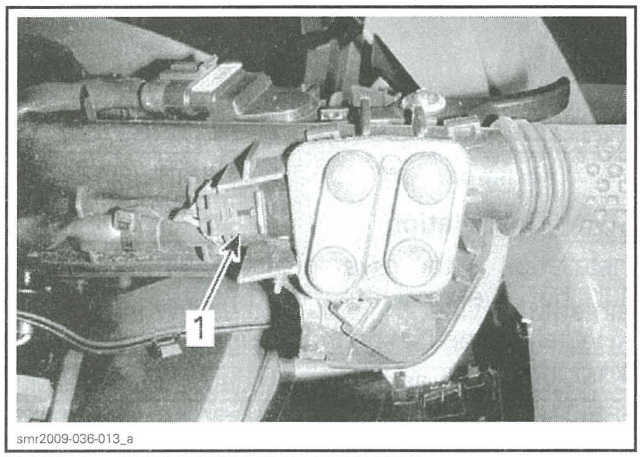

TYPICAL - GTX LIMITED iS ILLUSTRATED
1. MODE/SET and UP/DOWN switch connector

3. Remove switch assembly from support by lifting it off the support.
4. As applicable, ensure wiring from cruise switch is properly inserted in slot provided before installing MODE/SET and UP/DOWN arrow switch assembly.

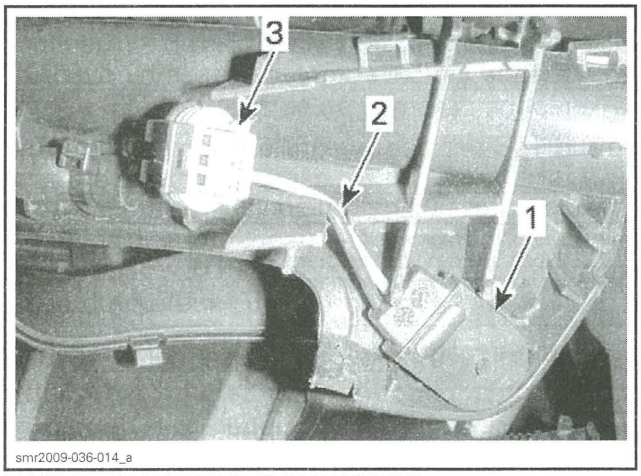

TYPICAL - GTX LIMITED iS ILLUSTRATED
1. Cruise switch
2. Wiring in slot provided in support
3. MODE/SET and UP/DOWN arrow switch connector

5. Apply a small amount of DIELECTRIC GREASE (P/N 293 550 004) on switch contact pins.
6. Install connector on new switch assembly.
7. Insert switch assembly in switch support.
8. Install steering cover, refer to *STEERING AND O.T.A.S.*

MODE/SET and UP/DOWN Switch Assembly Replacement (X Package Only)

Switch Removal

1. Remove the 2 screws in the front of the upper handlebar housing.

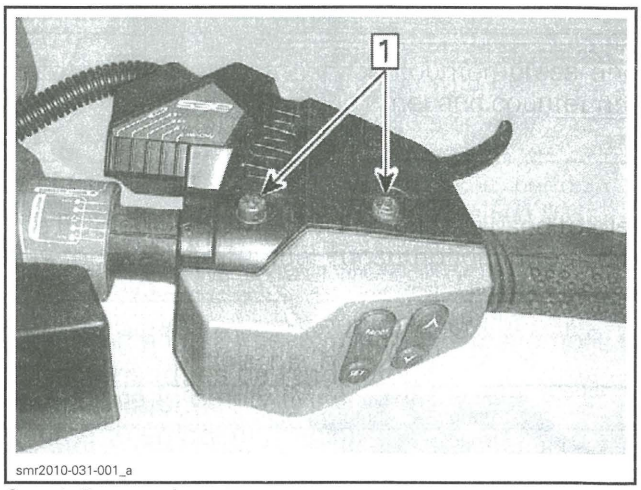

Step 1: Remove these two screws

2. Remove the screw at back of the handlebar.

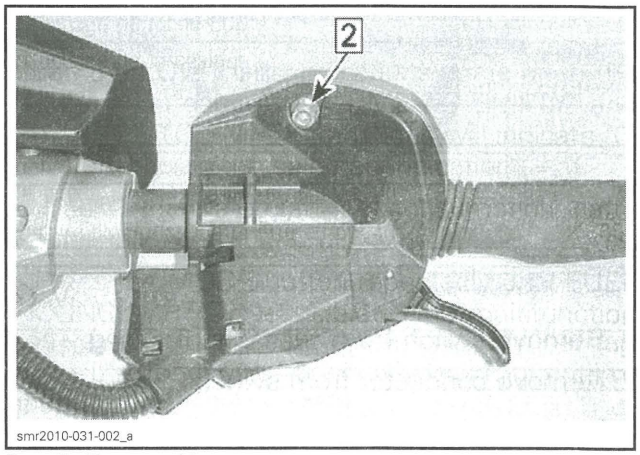

Step 2: Remove this screw

NOTICE **Do not try to pull the cover off the housing at this time or damage to the cover will occur.**

3. Take hold of the housing cover to prevent it from falling off the handlebar when unlocking the upper housing in the following step.
4. Using a small screwdriver, unlock the tab that retains the upper housing and pull the upper housing off.

NOTICE As you remove the upper housing, hold on to the housing cover to prevent it from falling off the handlebar.

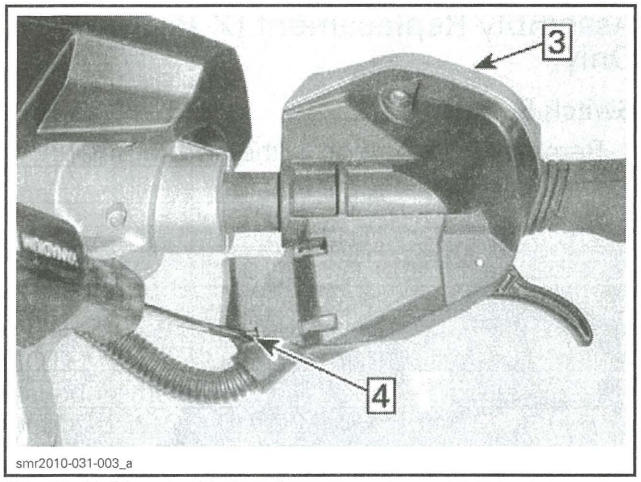

Step 3: Hold on to this housing cover
Step 4: Unlock this tab

5. Remove the housing cover from the handlebar.

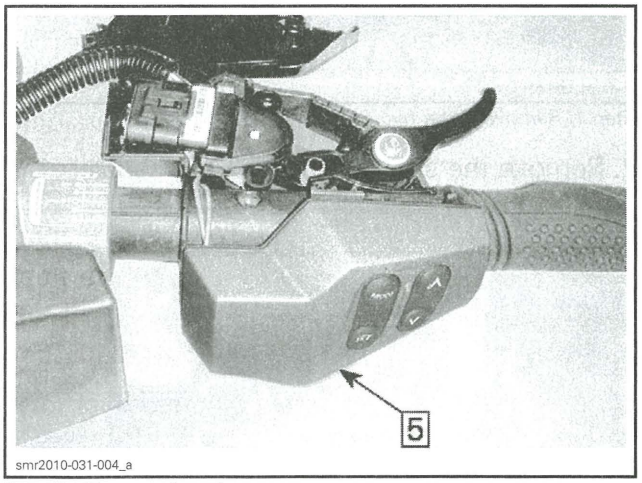

Step 5: Remove housing cover

6. Remove switch from handlebar housing.
7. Remove connector from switch.

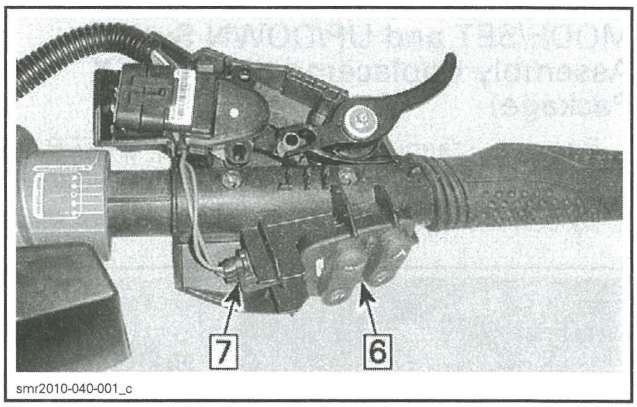

Step 6: Remove switch
Step 7: Remove connector

Switch Installation

Installation is the reverse of the removal procedure however, pay attention to the following.

1. Install connector on switch assembly.
2. Insert switch assembly in handlebar housing.
3. Ensure proper wire routing.
4. Ensure proper positioning of corrugated conduit.

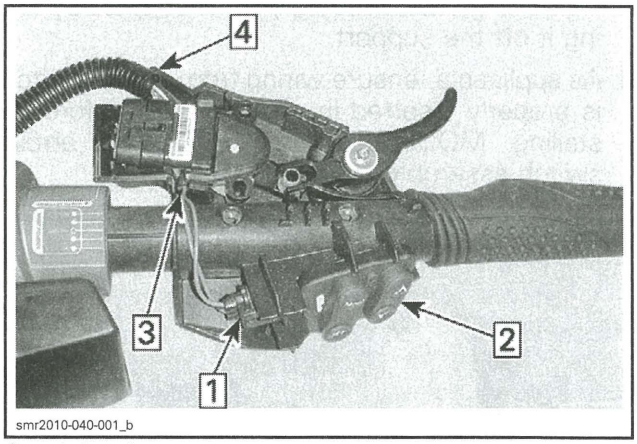

Step 1: Install connector
Step 2: Insert switch in handlebar housing
Step 3: Ensure proper wire routing
Step 4: Ensure proper positioning of corrugated conduit

5. Ensure engagement of housing cover retaining tabs.
6. Ensure engagement of upper housing locking tabs.

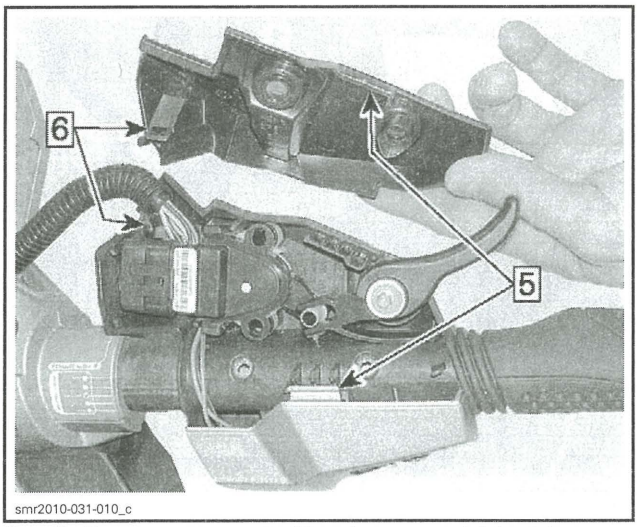

Step 5: Ensure engagement of housing cover retaining tabs
Step 6: Ensure engagement of upper housing locking tabs

7. Position the upper housing on the handlebar housing.
8. Ensure proper engagement of the upper housing and cover tabs.
9. Install the three retaining screws for the upper housing and tighten them as specified.

UPPER SWITCH HOUSING SCREW TORQUE
2 N•m (18 lbf•**in**)

10. Connect watercraft to the latest applicable B.U.D.S. version, refer to *COMMUNICATION TOOLS AND B.U.D.S.* subsection.
11. Ensure there are no fault codes, refer to *DIAGNOSTIC AND FAULT CODES* subsection.
12. Ensure proper operation of throttle lever and switch assembly.

WATER TEMPERATURE SENSOR

The water temperature sensor is connected to the ECM

Water from the jet pump passes through the intercooler inlet hose where the sensor measures its temperature, generating a signal that is interpreted by the ECM module. The ECM module then sends the information through the can-bus to the information center that translates it into a temperature indication.

If the temperature display is 0 degrees, water temperature sensor might be defective. Verify water temperature sensor and replace if necessary..

DEPTH SOUNDER

⚠ WARNING

Never use the depth gauge as a warning device to ride in shallow water. Use it as a navigation guide only. Not to be used to get precise navigation data.

Depth Sounder Troubleshooting

DEPTH SOUNDER TROUBLESHOOTING		
SYMPTOM	POSSIBLE CAUSE	REMEDY
Nothing is displayed in the information center	Depth sounder not connected.	Properly connect depth sounder.
	Depth sounder not properly installed.	Make sure depth sounder is properly installed in battery holder base. There must be no air gap between hull and silicone pad(s).
	12 Vdc wire or ground wire to depth sounder open.	Check fuse 3 in FB1 and wiring harnesses.
	Problem with communication link wires.	Check WHITE/BLACK and WHITE/RED wires to CAN bus-bars in FB1.
- - - - (ft or m) is displayed	Watercraft is not in water.	Launch watercraft in water and recheck.
	There is air between silicone pad and depth sounder or between depth sounder and battery holder base.	Remove depth sounder. Replace silicone pad.
	Depth sounder is defective.	Try a new depth sounder.

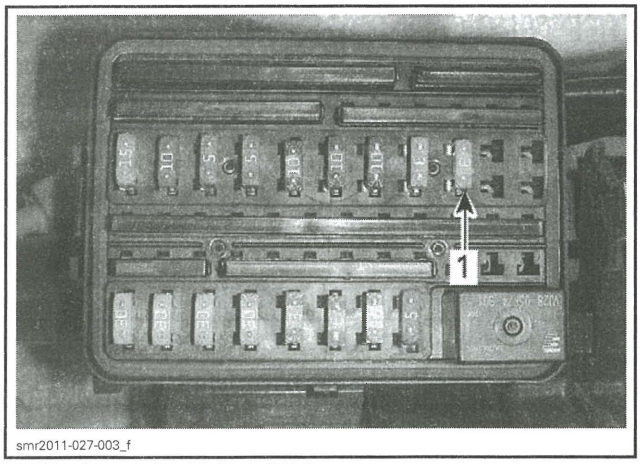

1. Depth sounder 3A fuse (FB1)

Depth Sounder Removal

1. Open the boarding platform.

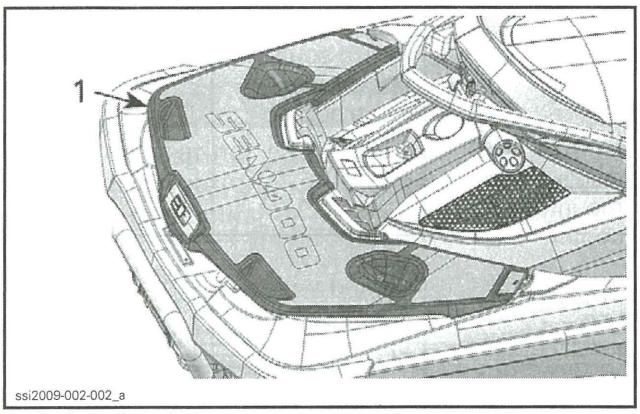

1. Re-boarding platform

2. Remove the starboard (RH) storage bin.

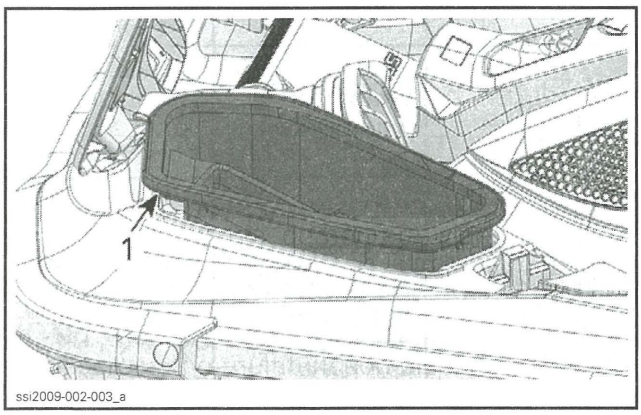

1. Starboard storage bin

3. Disconnect the diagnostic connector from its holder.

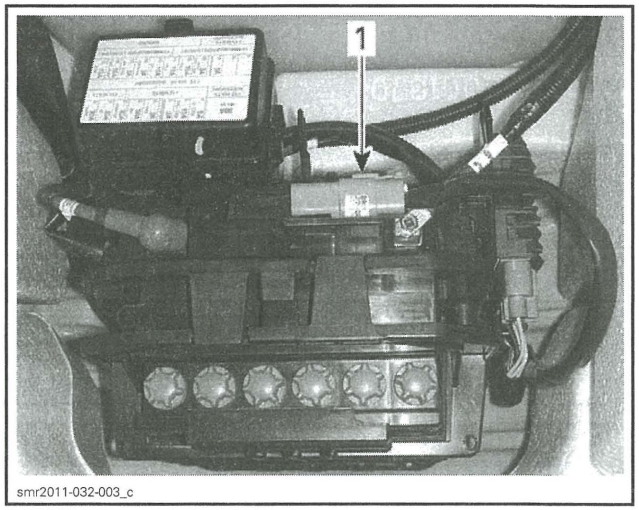

TYPICAL
1. Diagnostic connector

4. Remove the electrical component support from the battery holder, refer to *CHARGING SYSTEM*.
5. Remove the battery (with holder) from the watercraft, refer to *CHARGING SYSTEM*.

⚠ WARNING

Always disconnect the battery cables exactly in the specified order, BLACK (-) battery cable first then the RED (+) cable last.

6. Unlock the depth sounder clocking tabs from the battery holder base and pull the depth sounder out from the base.

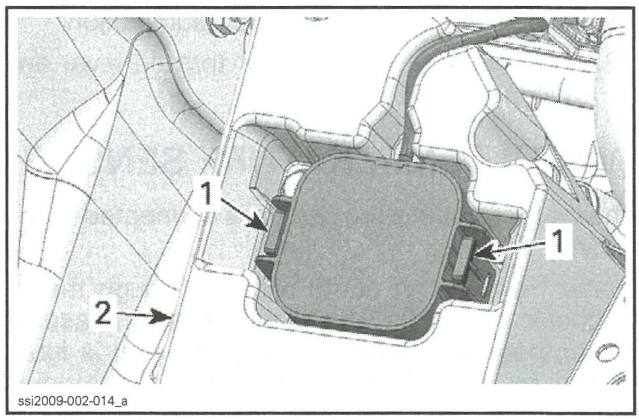

1. Locking tabs
2. Battery holder base

7. Disconnect the depth sounder connector from the wiring harness.

Depth Sounder Inspection

Ensure the silicone pad is in good condition.

NOTE: There must not be any air trapped between the bottom of the depth sounder and the bilge. Otherwise, the sounder will not function correctly.

If the silicone pad is damaged, replace it.

Depth Sounder Silicone Pad Replacement

1. Place the flat side of the depth sounder on a level surface.
2. Remove the old silicone pad from the bottom of the depth sounder.
3. Clean the concave surface of depth sounder.
4. Remove both protectors from the silicone pad.
5. Apply silicone pad on depth sounder.

NOTICE **Make sure to not trap air between silicone pad and depth sounder. Otherwise, the device will not work.**

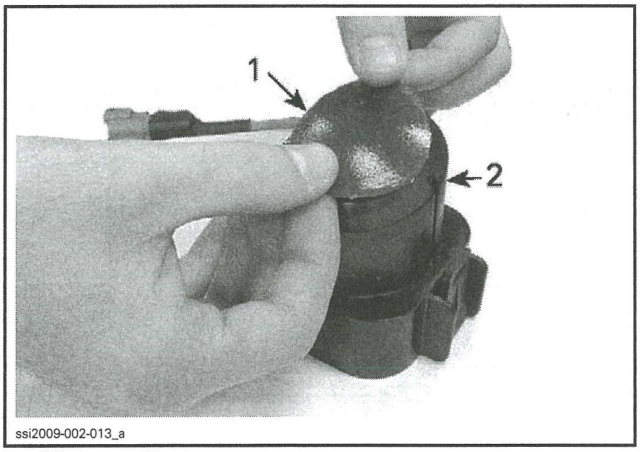

1. Silicone pad
2. Depth sounder

Depth Sounder Installation

1. Insert the depth sounder in the battery holder base while paying attention to the position of the wiring on the sounder with the groove in the battery holder base.
2. Press firmly on the depth sounder until both locking tabs are locked into the base.
3. Connect the sounder connector to the wiring harness and route the wiring in the groove provided in the battery holder base.

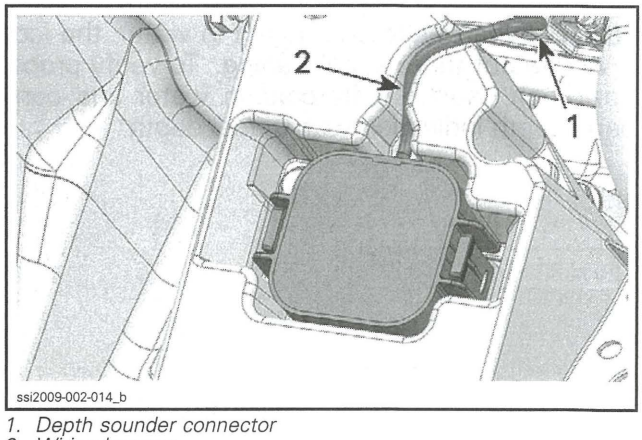

1. Depth sounder connector
2. Wiring harness

4. After installation:
   - 4.1 Try pulling the sounder out to ensure it is properly locked in the battery support base.
   - 4.2 Try pushing on depth sounder. You must feel a resistance (no air gap).

NOTE: An air gap can be eliminated by adding an additional silicone pad.

5. Install the battery and electrical component support in the reverse order of removal, refer to *CHARGING SYSTEM*.
6. Install the diagnostic connector in its holder.
7. Carry out the following procedure: *TESTING DEPTH SOUNDER OPERATION*.

Testing Depth Sounder Operation

1. Press START/STOP button to activate gauge.
2. Confirm the depth sounder icon is active in gauge.

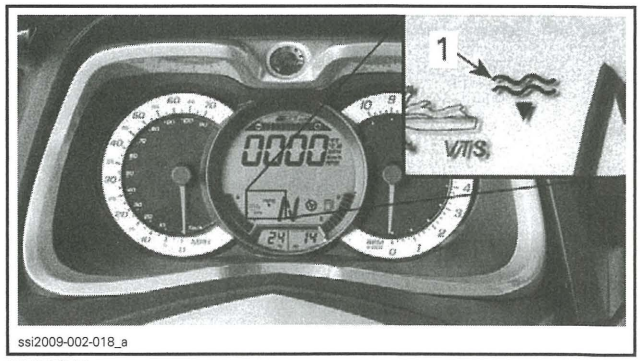

TYPICAL
1. Depth sounder icon

3. If icon is not active, check in BUDS that icon box is checked.

NOTE: When watercraft is not in water, the icon is active but there is no reading. To verify proper operation, launch watercraft in water and compare depth indication with actual depth.

iBR AND VTS

SERVICE TOOLS

Description	Part Number	Page
DIAGNOSTIC HARNESS	529 036 188	159, 161
FLUKE 115 MULTIMETER	529 035 868	159, 166–167, 185

SERVICE PRODUCTS

Description	Part Number	Page
DIELECTRIC GREASE	293 550 004	170, 186
LOCTITE 243 (BLUE)	293 800 060	170

iBR GATE COMPONENTS

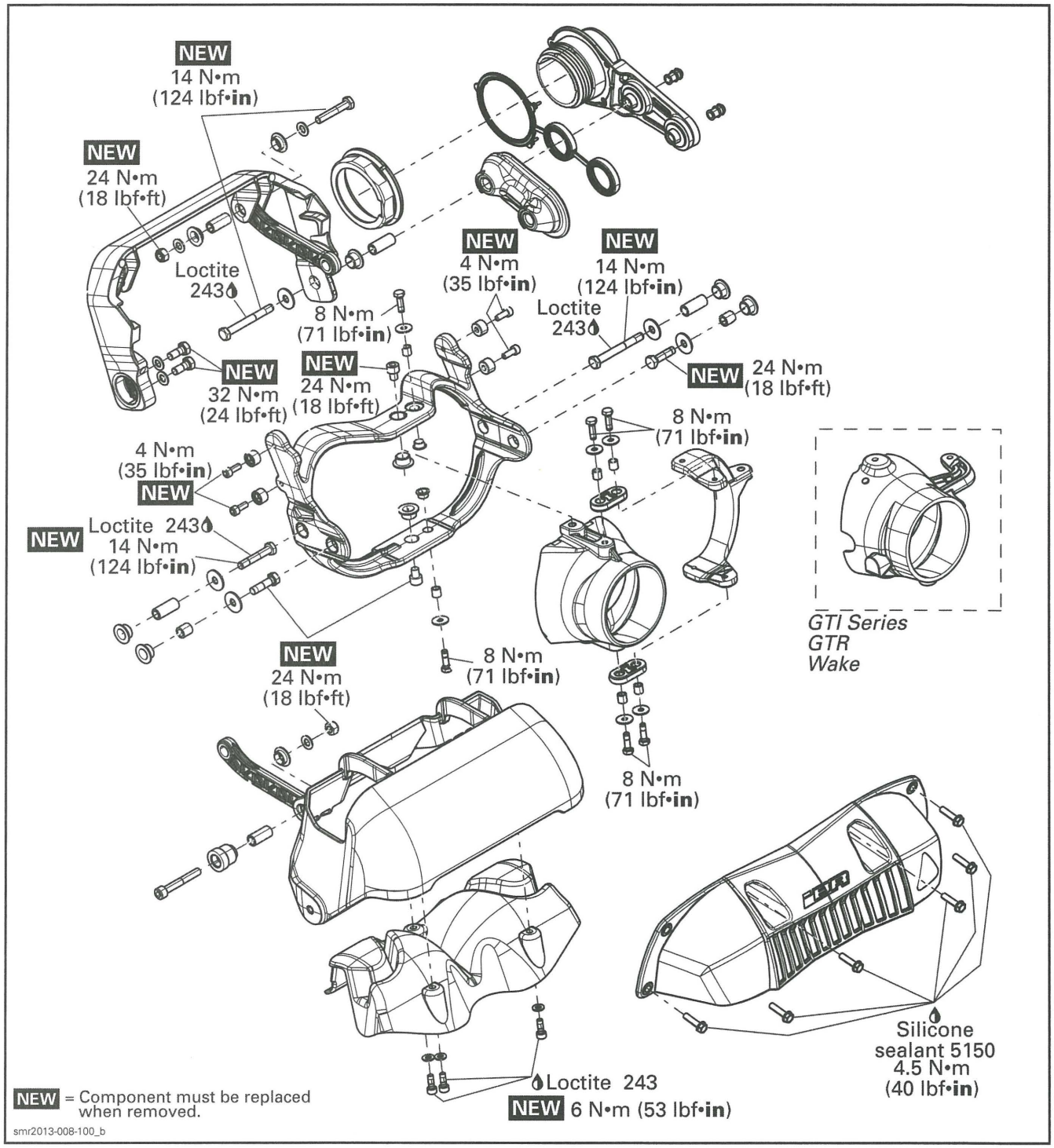

iBR ACTUATOR

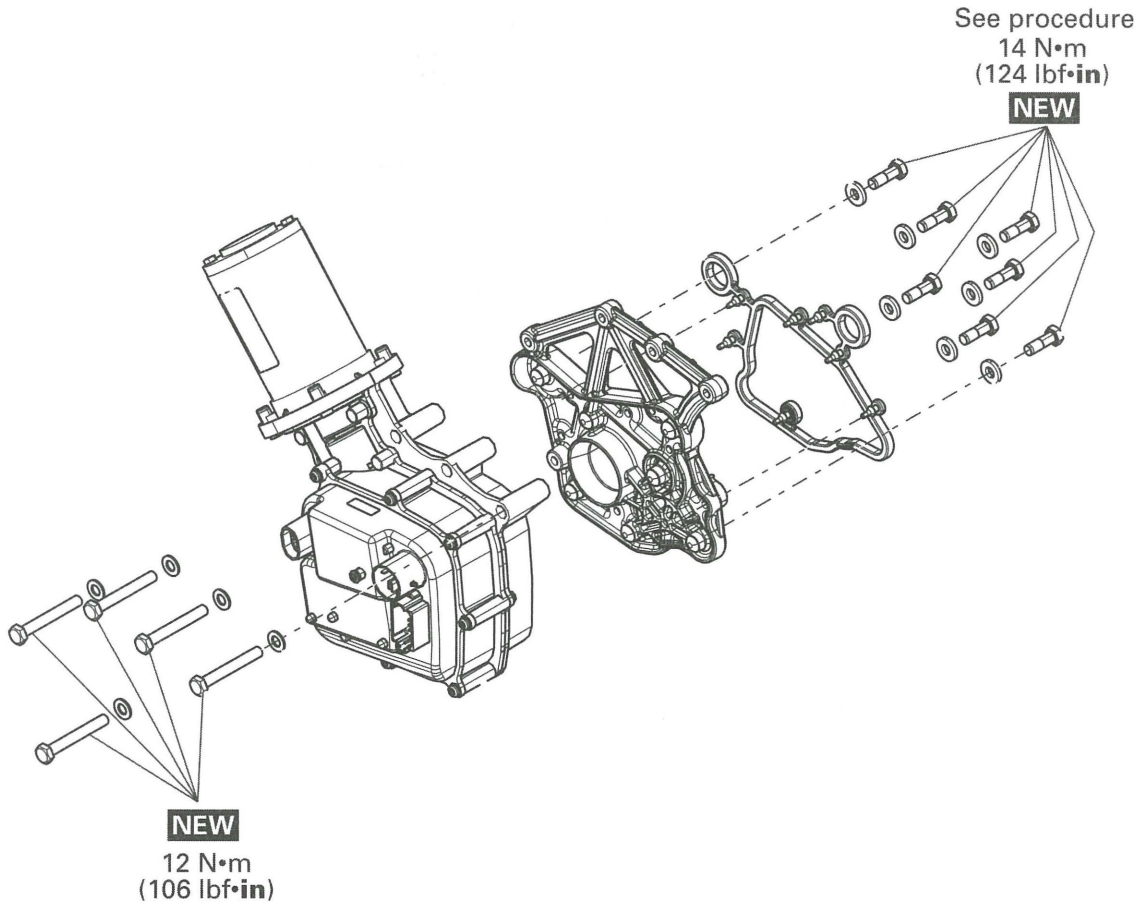

NEW = Component must be replaced when removed.

smr2013-008-101_a

GENERAL

SYSTEM DESCRIPTION (iBR)

The iBR (intelligent Brake and Reverse) is an electronically controlled braking and reverse system.

The iBR module controls the position of the iBR gate to provide forward thrust, reverse thrust, braking thrust, and neutral.

The operator commands the position of the iBR gate using either the throttle lever for forward thrust, or the iBR lever for neutral, reverse, and for the braking function.

The iBR lever is located on the LH side of the handlebar.

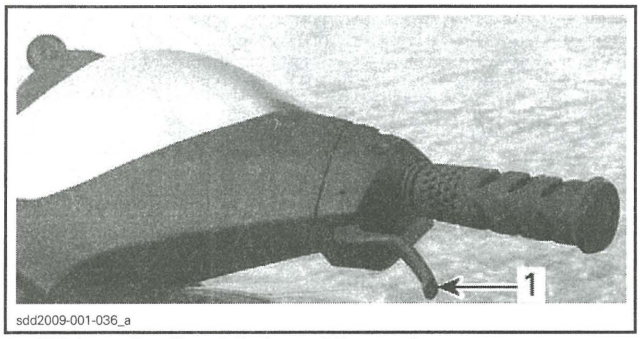

1. iBR lever (intelligent Brake and Reverse)

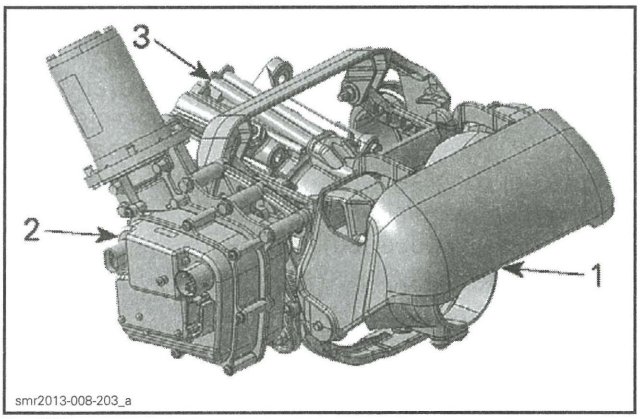

1. iBR gate
2. iBR module and motor
3. Jet pump

When the iBR lever is pulled in, it operates the brake and reverse lever sensor (BRLS). It is a double output hall effect sensor. The redundancy is used for security purposes.

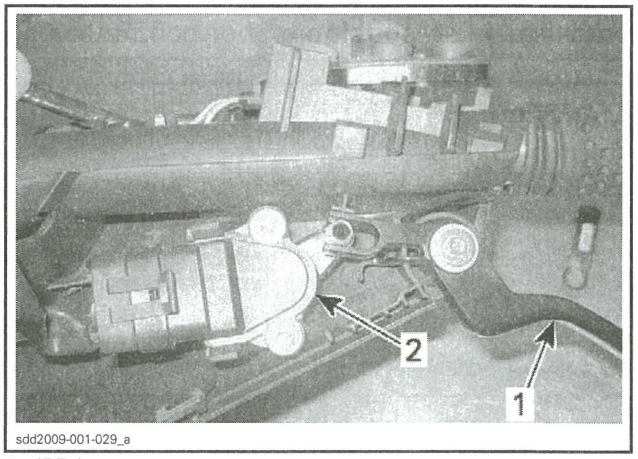

1. iBR lever
2. BRLS sensor

The BRLS sends the signals to the iBR module. The iBR module controls an electric motor that in turn raises or lowers the iBR gate through a mechanical drive unit.

NOTE: The iBR gate will move when commanded by the iBR lever only if the engine is running. For maintenance purposes, the iBR OVERRIDE function available through the gauge can be used to electrically move the gate to the desired position.

The iBR module is programmed with various parameters that it compares to the input signals and information it obtains through the CAN bus from the other electronic modules.

Depending on vehicle speed and how far the iBR lever is pulled in, the iBR module will automatically adjust the iBR gate movement speed and stroke.

NOTE: The iBR lever must be pulled in at least 25% of its travel (approximately) before the iBR gate starts to move. The first 25% of iBR lever travel has no effect on the iBR gate.

Every time the iBR gate moves when commanded by the iBR lever, engine RPM is momentarily reduced to idle speed as the gate moves.

⚠ WARNING

If it is necessary to remove any foreign object catch in the iBR gate, nozzle or linkages, strictly observe the following before proceeding:

- **Remove tether cord from engine cut-off switch.**
- **Wait at least 5 minutes or remove iBR fuses.**
- **Do not press on START/STOP button. If START/STOP button is pressed, wait another 5 minutes.**

Forward Mode

To engage forward:
- Start engine
- Pull in the throttle lever.

The iBR gate will automatically move to the forward position (full up).

NOTE: The full up position of the iBR gate is dependent on the selected VTS trim position.

Reverse Mode

If the watercraft speed is below 8 km/h (5 MPH) when the iBR lever is pulled in, reverse mode is engaged.

When the iBR lever is pulled in to engage reverse, the following occurs:
- Engine RPM is reduced to idle.
- The iBR gate moves to the reverse position.
- Engine RPM ramps up to the engine power commanded by the throttle lever.

When operating in reverse mode, the iBR lever controls the iBR gate position and the engine RPM is controlled by the throttle lever.

The iBR gate position can be modulated anywhere between the neutral and full reverse positions depending on the position of the iBR lever. If the iBR lever position is varied during reverse operation, engine RPM is reduced to idle every time the iBR gate moves. It is therefore recommended to maintain the iBR lever completely pulled in.

Maximum engine RPM in reverse is 5000 RPM.

Braking Mode

If the watercraft speed is 8 km/h (5 MPH) per hour and above when the iBR lever is pulled in, braking mode is engaged.

When the iBR lever is pulled in to engage braking, the following occurs:
- Engine RPM is reduced to idle.
- The iBR gate moves to the maximum down position.
- Engine RPM ramps up to the engine power commanded by the iBR lever.

When operating in braking mode, the iBR gate always moves to the maximum down position. The throttle lever signal is overridden and engine RPM is now dependent on watercraft speed and how far the iBR lever is pulled in.

If watercraft speed is high when braking is applied, engine power will be initially low and then ramp up to the power commanded by the iBR lever position. The engine RPM may be increased, as necessary, to apply a stronger braking effect with the jet pump thrust when the conditions dictate.

As the watercraft slows to less than 8 km/h (5 MPH), the following occurs:
- Braking mode ceases.
- Reverse mode takes over if the iBR lever is not released.
- Throttle control reverts back to the throttle lever.

Neutral Mode

Every time the iBR lever is pulled in and released, the iBR gate will default to the **neutral** position, except if the throttle lever is still pulled in when the iBR lever is released. If the throttle lever is still pulled, the iBR gate will move to the forward position when the iBR lever is released and the watercraft will accelerate forward.

iBR Override Function

To permit easy access to the jet pump, nozzle, iBR gate, and various linkages for inspection, maintenance, cleaning or removal of debris, the iBR system provides for an iBR override function that is accessible through the information center.

When iBR override is activated, it allows the user to electrically move the iBR gate and nozzle through its full range of motion.

NOTICE **An object or tool catch in the iBR gate, nozzle or linkages when using the iBR override function may cause damage to these components. Remove any foreign object that may obstruct the iBR gate travel.**

Activating iBR Override Function

⚠ WARNING

When using the iBR override function, ensure nobody stands near the rear of the watercraft. Movement of the iBR gate may squeeze fingers.

To use the iBR override function, carry out the following step.

1. Press the START/STOP button.
2. Install the tether cord.

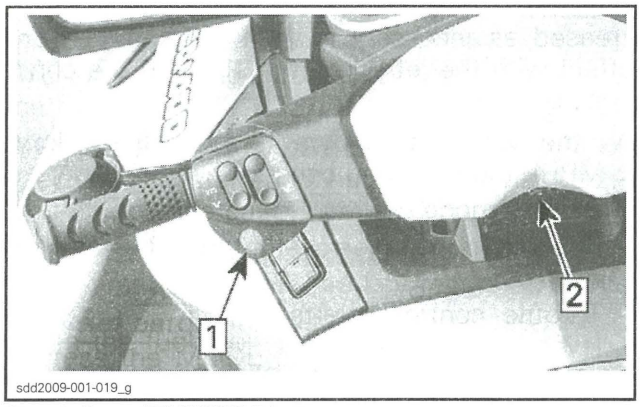

sdd2009-001-019_g

Step 1: Press START/STOP button
Step 2: Install tether cord

NOTE: Do not start the engine. The tether cord must be installed to ensure the information center will not shut off all indications after its self test function. Briefly press the START/STOP button to reactivate the electrical system when required.

3. Press the **Mode** button on the RH handlebar repeatedly until SETTINGS is visible in the digital display of the information center.

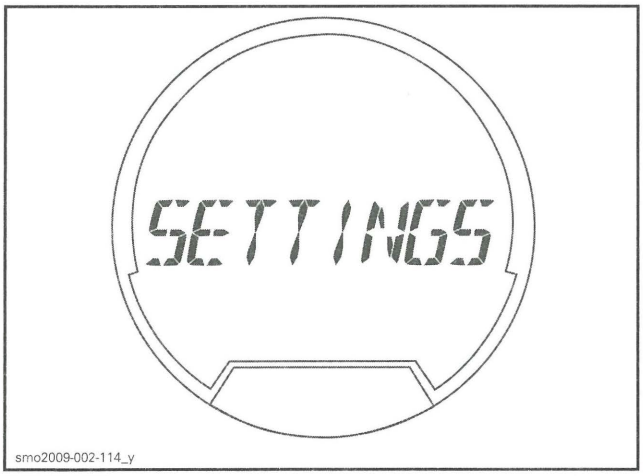

smo2009-002-114_y

SETTINGS

4. Press the SET button (RH handlebar) to enter the **Settings** function.
5. If iBR OVR is not the following function displayed, press the UP/DOWN arrow button until iBR OVR is displayed.

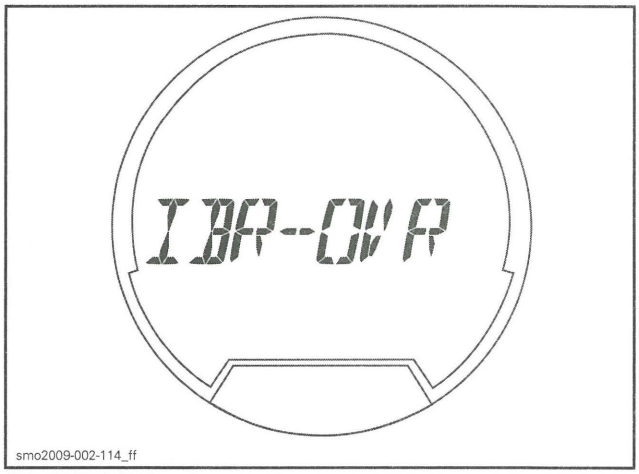

smo2009-002-114_ff

iBR OVERRIDE

6. Press the SET button to enter iBR OVR function and display OVR OFF.

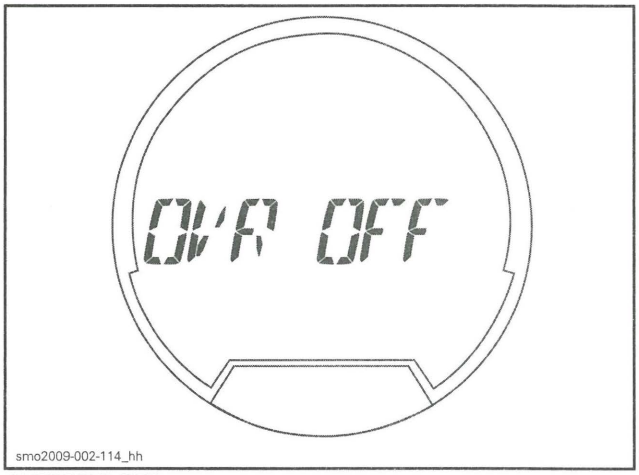

smo2009-002-114_hh

OVERRIDE OFF

7. Press the UP/DOWN arrow button (RH handlebar) to display OVR ON.

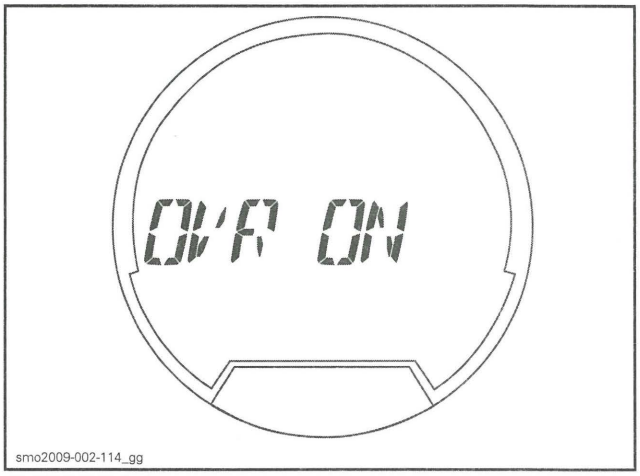

smo2009-002-114_gg

OVERRIDE ON

8. Press the SET button to select the OVR ON function. The gauge will return to its normal display.

Models with a VTS Switch

9. Press the VTS UP or DOWN button (LH handlebar) to move the iBR gate.

Models Without a VTS Switch

10. Press the UP/DOWN arrow button (RH handlebar) to move the iBR gate.

Deactivating iBR Override Function

To deactivate the iBR override function, carry out one of the following:

1. Repeat previous steps and press the SET button when OVR OFF is visible.
2. Remove tether cord and wait for the electrical power to shut off (approximately 3 minutes).
3. Start the engine.

NOTE: When the engine is started, the iBR OVR function is deactivated and the iBR gate will move to the neutral position.

⚠ WARNING

When moving the iBR gate using the iBR override function, ensure nobody stands near the rear of the watercraft. Movement of the gate may squeeze fingers.

SYSTEM DESCRIPTION (VTS)

The VTS system is actually part of the iBR system.

It provides watercraft pitch trim adjustments by adjusting the horizontal position of the jet nozzle.

The VTS can be electrically trimmed to the desired attitude within the VTS range, or to one of 2 preset trim positions.

The VTS switch (or Up/Down switch) sends command signals to the gauge. The gauge converts them to CAN protocol and sends them through the CAN bus to the iBR module on the iBR actuator. The actuator then moves the iBR gate which moves the nozzle to the desired trim position.

NOTE: The nozzle and iBR gate move together in the VTS trim range up to the maximum nozzle down position. If NEUTRAL, BRAKING or REVERSE is engaged, the iBR gate moves past the VTS full down position. When FORWARD thrust is reengaged, the nozzle and iBR gate move up to the last selected VTS trim position.

The nozzle trim position can be seen on the VTS position indicator in the information center.

NOTE: Changing the VTS trim position without the engine running in forward thrust mode only changes the indication. The nozzle will move to the selected VTS trim position when forward thrust is engaged.

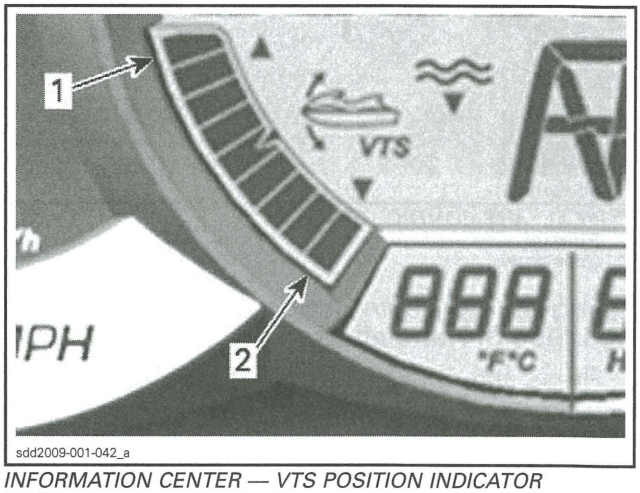

INFORMATION CENTER — VTS POSITION INDICATOR
1. Bow up
2. Bow down

NOTE: Only the segment indicating the relative position of the VTS will be on. The illustration shows all segments on as can be seen during the self test function.

The VTS system provides the following features according to models

- Nozzle trimming
- Selection of 2 preset trim positions
- Recording of 2 preset trim positions.

Nozzle Trimming

Watercraft must be operating in forward position.

Depending on the model, 5 or 9 trim positions are available.

Using the VTS Button (LH Side of Handlebar)

Press the UP or DOWN arrow button to change the VTS setting.

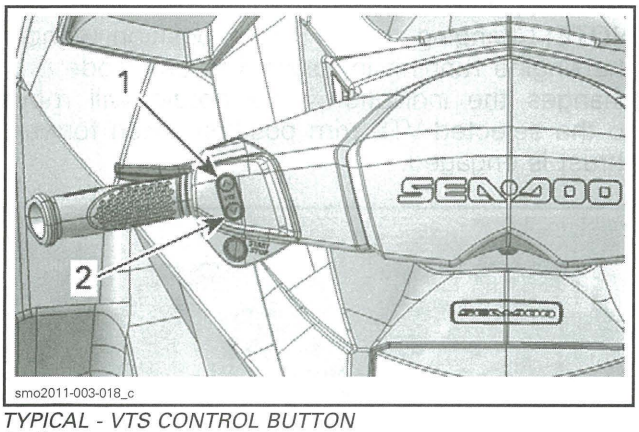

smo2011-003-018_c

TYPICAL - VTS CONTROL BUTTON
1. *Bow up*
2. *Bow down*

Using the Up/Down Button (RH Side of Handlebar)

1. Press the MODE button to display the VTS function in the gauge.
2. Press the UP or DOWN arrow button to change the VTS setting.

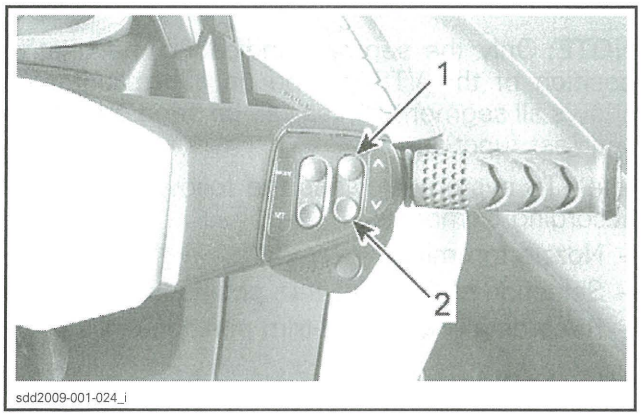

sdd2009-001-024_i

1. *Bow up*
2. *Bow down*

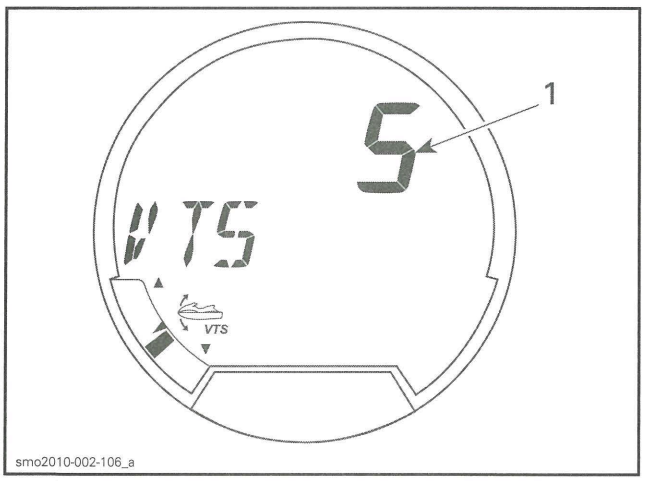

smo2010-002-106_a

FUNCTION SELECTED - VTS
1. *VTS setting*

3. Press the SET button to save the desired setting.

Using Preset Trim Positions

Two preset trim positions can be selected.

To select the **highest** trim position recorded, double-click on the VTS UP arrow button (bow up).

To select the **lowest** trim position recorded, double-click on the VTS DOWN arrow button (bow down).

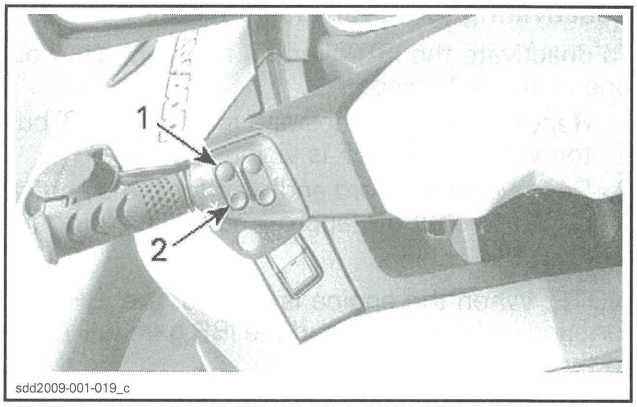

sdd2009-001-019_c

TYPICAL - DOUBLE-CLICK UP OR DOWN TO USE PRESET POSITIONS
1. *Highest preset position on UP arrow*
2. *Lowest preset position on DOWN arrow*

Recording Preset Trim Positions

Two different VTS trim positions may be recorded for quickly selecting the preferred watercraft trim attitude.

When the VTS PRESET trim positions are changed, the new settings will remain recorded in memory.

To record VTS preset trim positions:

1. Press the START/STOP button.
2. Install the tether cord on the engine cut-off switch.
3. Press the MODE button repeatedly until VTS MODE is displayed.

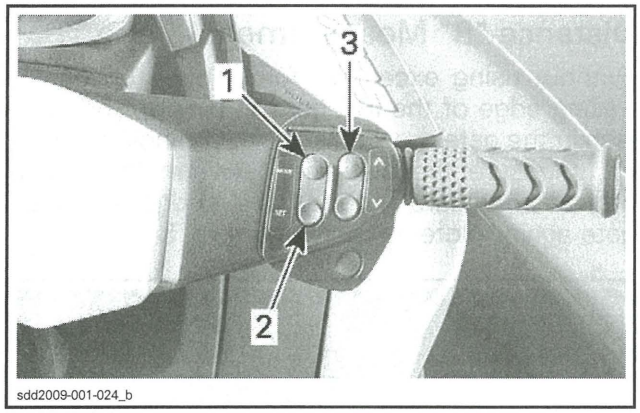

1. *MODE button*
2. *SET button*
3. *UP/DOWN arrow button*

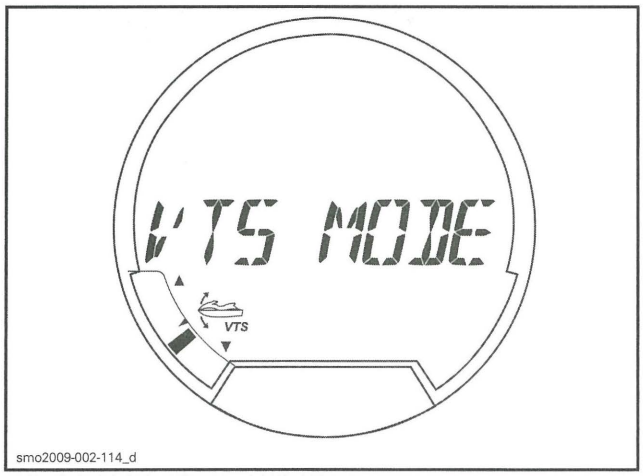

FUNCTION SELECTED - VTS MODE

4. Press the SET button to display PRESET 1.
5. Press the VTS UP/DOWN button to change the PRESET 1 VTS position.

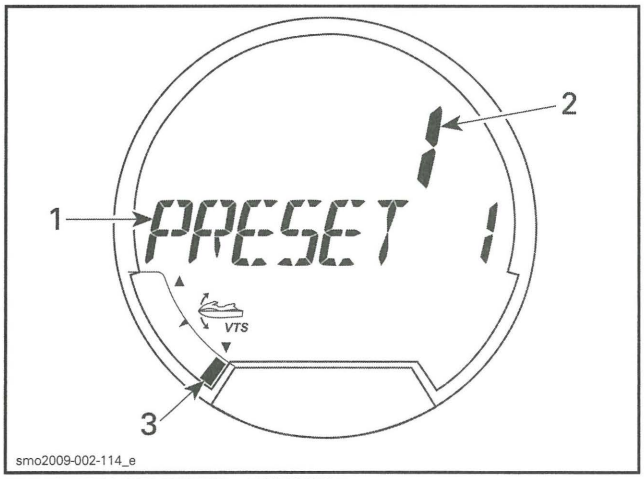

FUNCTION SELECTED - PRESET 1
1. *Preset 1 function*
2. *VTS setting selected to 1*
3. *VTS position indicator at setting 1 (bow down)*

6. Press the SET button to save PRESET 1 and display PRESET 2.
7. Set PRESET 2
8. Press the SET button to save the settings.

NOTE: The VTS system will compare the preset trim settings recorded, the highest position will be assigned to the UP arrow (bow up), the lowest to the DOWN arrow.

ADJUSTMENT

iBR NEUTRAL ADJUSTMENT

When in NEUTRAL, if the watercraft creeps forward or backward, the iBR system may be trimmed.

If the watercraft is moving forwards, momentarily press the DOWN arrow button on RH side of handlebar.

If the watercraft is moving backwards, momentarily press the UP arrow button on RH side of handlebar.

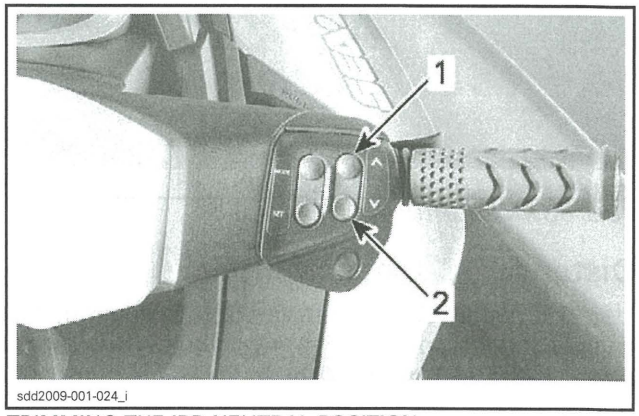

TRIMMING THE iBR NEUTRAL POSITION
1. *UP arrow button (to stop rearward movement)*
2. *DOWN arrow button (to stop forward movement)*

NOTE: Press the UP/DOWN arrow button repeatedly until proper adjustment of the neutral position is attained and the watercraft stops moving.

MAINTENANCE

iBR GATE BACKLASH CHECK

1. Using the iBR override function, move the iBR gate to the up position. Refer to *SYSTEM DESCRIPTION (iBR)* in this subsection.

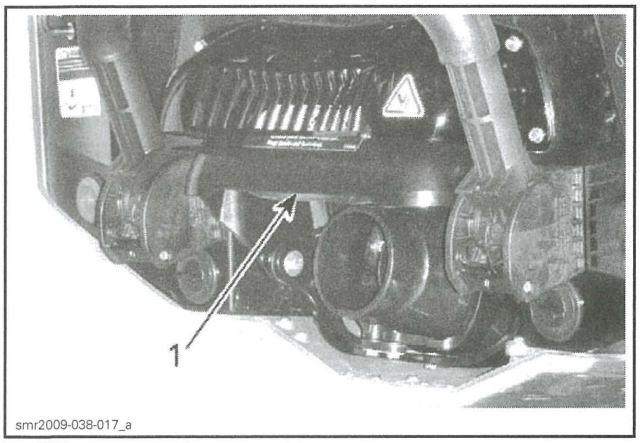

1. iBR gate moved to up position

2. Take hold of the lower edge of the iBR gate and pull down on it slightly, then release it.

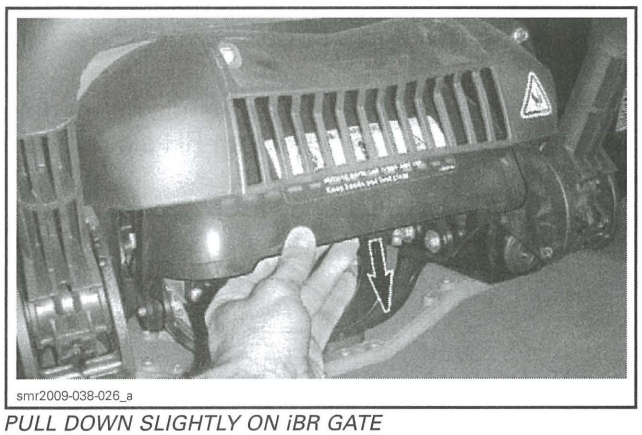

PULL DOWN SLIGHTLY ON iBR GATE

Distance "A" Measurement

Using a machinists ruler, measure the distance between the bottom of the guard and the trailing edge of the iBR gate. Note as measurement "A".

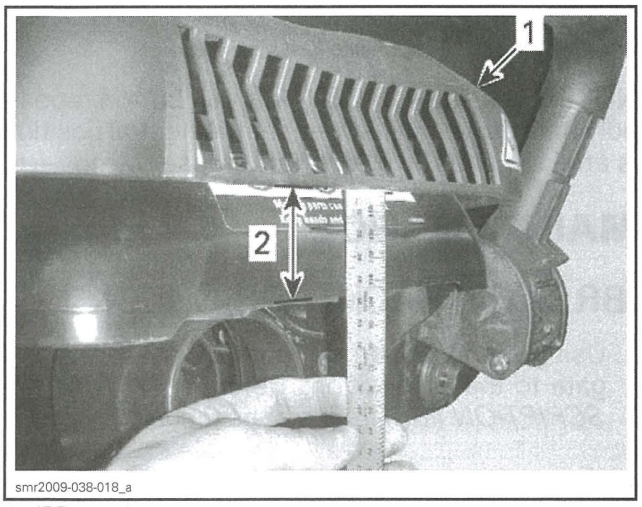

1. iBR guard
2. Measurement "A"

Distance "B" Measurement

Without using excessive force, push up on the trailing edge of the iBR gate to pick up the backlash in the gate mechanism. As you hold the gate up, measure the distance between the trailing edge of the guard and the trailing edge of the iBR gate again. Note as measurement "B".

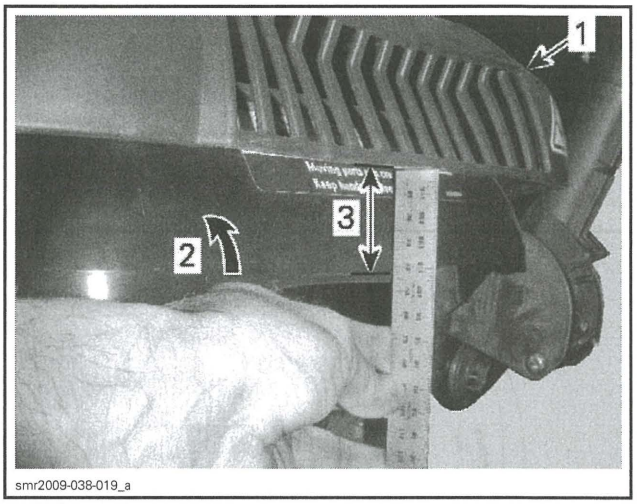

1. iBR guard
2. Lift up on iBR gate
3. Measurement "B"

iBR Gate Backlash Calculation

Subtract measurement "B" from "A" to obtain the iBR gate backlash.

iBR GATE BACKLASH (A - B)	
MAXIMUM	25 mm (.98 in)

Backlash Measurement Result

If backlash is excessive, inspect and replace iBR gate parts as required in the following order:

1. Tightening of screws retaining the U-arm to the actuator shaft
2. Ribs on actuator shaft end and in U-arm
3. Friction sleeves
4. Bushings
5. Contact points (VTS trim ring, U-arm, iBR gate)
6. iBR actuator.

Check iBR gate backlash and gate operation after parts replacement and reassembly.

FRICTION SLEEVE REPLACEMENT

The 4 friction sleeves on the VTS trim ring should be replaced if they show signs of advanced wear (flat spots), or every 100 hours as per the maintenance schedule.

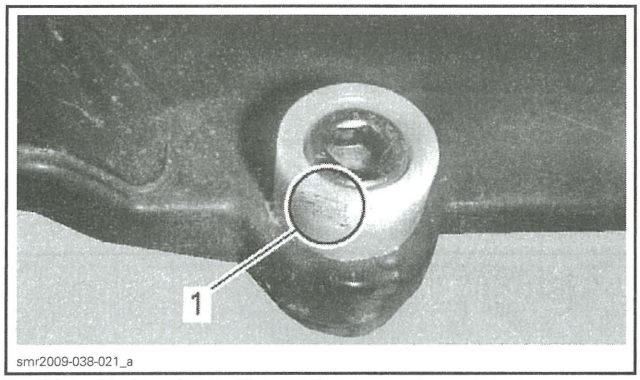

1. Worn friction sleeve (flat spot)

1. To replace the friction sleeves, remove the iBR gate and VTS ring as an assembly, refer to *iBR GATE AND VTS RING REMOVAL* in this subsection.

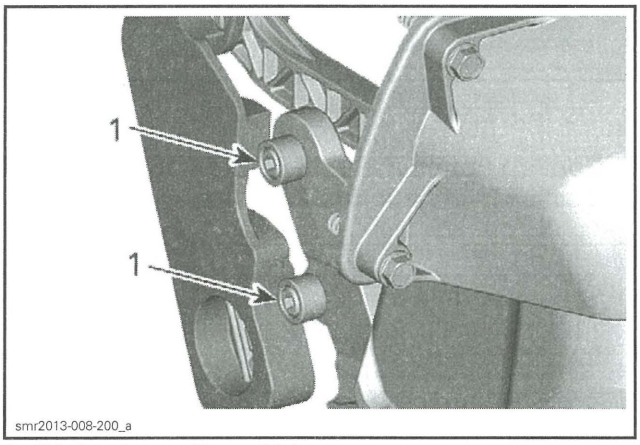

1. Friction sleeves (2 per side)

2. Remove the worn friction sleeves from the VTS ring and install new ones.
3. Apply service products, torques, and install new screws with threadlocker as specified in the exploded view.

INSPECTION

IBR SYSTEM FUNCTIONAL TEST

Test on Dry Land

NOTE: This test requires two persons. One person to start engine and operate controls, and one person to observe iBR gate movement.

1. Provide adequate ventilation of exhaust gases or move watercraft outside.

NOTICE **Do not install an exhaust ventilation hose in the iBR gate area or damage may occur when the iBR gate moves downward during operation.**

2. Connect a water hose to the watercraft to provide exhaust system cooling when operating engine. Refer to *EXHAUST SYSTEM* subsection for procedure.

NOTICE

- **Ensure there are no tools or other object that may interfere with the iBR gate movement.**
- **Do not run engine for more than 2 minutes out of water or damage may occur to drive shaft seal carrier.**

⚠ WARNING

The person observing the iBR gate movement must stand to the side of the stern well clear of the iBR gate and pump nozzle in full view of the operator.

3. Start engine and let idle.

NOTE: If iBR gate was not in the neutral position, it will move to the neutral position on engine start up.

4. Depress the throttle lever slightly and visually confirm the iBR gate moves to the forward position (up to the VTS trim position), then release throttle. The iBR gate must remain in the forward position.
5. Depress the iBR lever fully and confirm the iBR gate moves to the full down position.
6. Release the iBR lever completely and confirm the iBR gate moves to the neutral position.
7. Disconnect water hose then shut engine off.

Test with Watercraft on a Waterway

1. Start engine and let idle.

NOTE: If iBR gate is not in the neutral position before the engine start, it will move to the neutral position on engine start up.

2. Depress the throttle lever slightly, then release it. Forward movement of the watercraft confirms the iBR gate has moved to the forward position.
3. Depress the iBR lever fully. Rearward movement of the watercraft confirms the iBR gate has moved to the reverse position.
4. Release the iBR lever completely. Reverse thrust should cease and the watercraft should continue to drift rearward on momentum.
5. Apply a small amount of forward thrust to stop rearward velocity, then tap the iBR lever to return the iBR gate to neutral.
6. Shut engine off.

VTS FUNCTIONAL TEST

NOTE: This test requires two persons. One person to start engine and operate controls, and one person to observe nozzle and iBR gate movement.

1. Provide adequate ventilation of exhaust gases or move watercraft outside.

NOTICE **Do not install an exhaust ventilation hose in the iBR gate area or damage may occur when the iBR gate moves downward during operation.**

2. Connect a water hose to the watercraft to provide exhaust system cooling when operating engine. Refer to *EXHAUST SYSTEM* subsection for procedure.

NOTICE

- **Ensure there are no tools or other object that may interfere with the iBR gate movement.**
- **Do not run watercraft for more than 2 minutes out of water or damage may occur.**

⚠ WARNING

The person observing the iBR gate movement must stand to the side of the stern well clear of the iBR gate and pump nozzle in full view of the operator.

NOTE: The VTS system cannot be tested without the engine operating in forward thrust. If the engine is not running in forward thrust, only the VTS indication will change when the VTS control button is pressed; the nozzle will not change position until forward thrust is engaged by pulling the throttle lever.

3. Start engine.
4. Pull in and release the throttle lever to engage forward thrust, allow engine to run at idle RPM.

Models with a VTS Switch

5. Push the VTS UP and DOWN button alternately to check VTS operation.

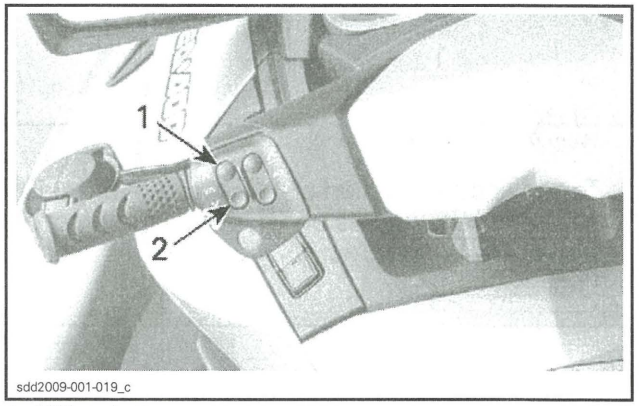

1. VTS up button
2. VTS down button

6. Confirm nozzle movement and VTS position indication change in the information center.

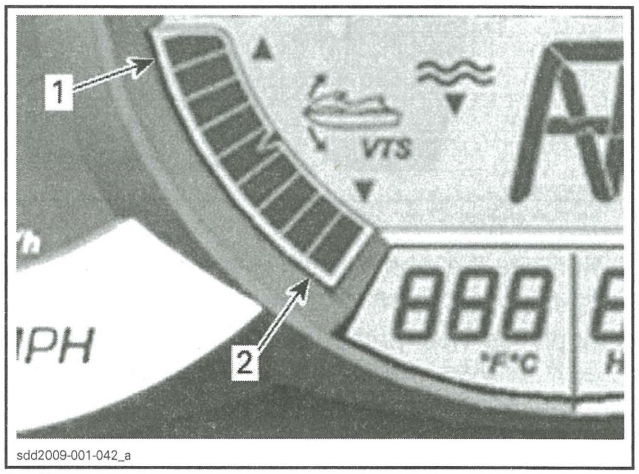

1. Bow up
2. Bow down

NOTE: Only the segment indicating the relative position of the VTS will be on. The illustration shows all segments on as visible during the gauge self test function.

7. Double click the VTS UP and DOWN button alternately to test the VTS preset trim positions.

If double clicking the VTS UP or DOWN button does not cause the nozzle position or indication to change, navigate to the VTS MODE function in the gauge and check for recorded PRESET 1 and PRESET 2 settings. If no presets are recorded, record PRESET 1 bow up and PRESET 2 bow down, exit the function and carry out a new test.

If both PRESET 1 and PRESET 2 have the same setting, note the operator's setting and change one PRESET, exit the function and carry out a new test. Return the PRESET to the operator's preference after testing is complete.

Models Without a VTS Switch

8. Press the MODE button to display VTS.

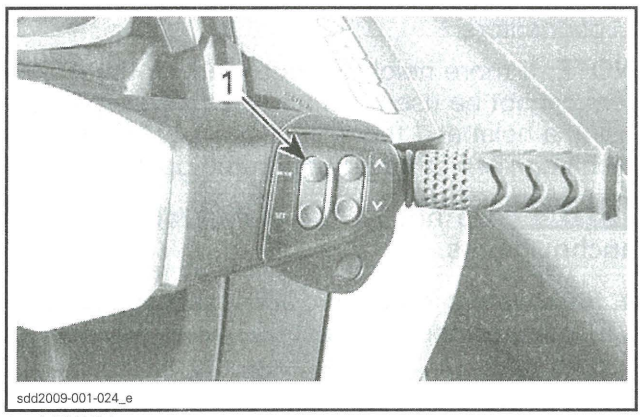

1. MODE button

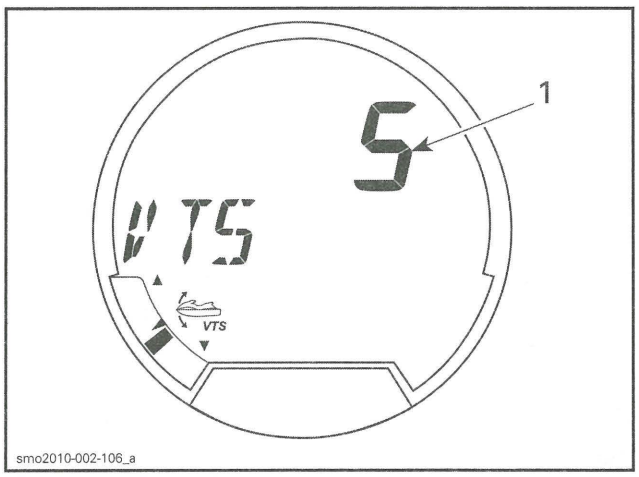

VTS FUNCTION
1. VTS setting

9. Press the UP/DOWN arrow button (RH handlebar) to change the VTS angle.

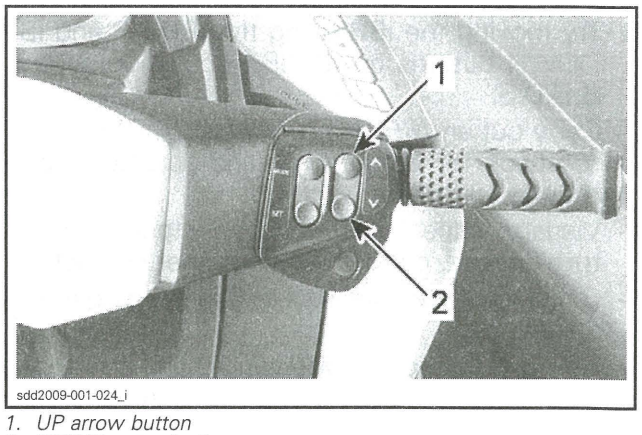

1. UP arrow button
2. DOWN arrow button

10. Ensure the VTS setting in the gauge moves with the VTS.

TROUBLESHOOTING

The iBR system is self monitoring. If a fault occurs in the iBR system, it will raise a fault code and communicate it to the information center through the CAN bus. The information center will turn on the iBR indicator light to advise the operator of the iBR system fault. If the fault remains active, it may be displayed in the gauge. If it is no longer active, B.U.D.S. must be used to read the fault.

TESTING SEQUENCE

To troubleshoot the iBR system, carry out the following in this order:

- Ensure the iBR gate movement is not obstructed in any way.
- Ensure the iBR gate mechanisms (gate, VTS ring, U-arm and linkages) are all in good condition and do not show signs of excessive wear or friction.
- Cycle the iBR gate up and down using the *iBR OVERRIDE* function as described in this subsection.
- Check the iBR power fuse (F5) and the iBR control fuse (F17) in fuse box if the gate did not move using the iBR OVERRIDE function.
- Connect the watercraft to B.U.D.S. to check for iBR system or CAN bus related fault codes. Carry out service actions as indicated in B.U.D.S.
- If a CAN bus communication fault with the iBR module is indicated, or the iBR module is not visible in B.U.D.S., carry out a continuity test of the CAN bus wires between the iBR module and the CAN bus-bars in fuse box. Refer to *CONTROLLER AREA NETWORK (CAN)* subsection.

- Try moving the iBR using the iBR UP and iBR DOWN buttons on the iBR activation page in B.U.D.S.
- Carry out an *iBR SYSTEM FUNCTIONAL TEST* to check for proper gate and actuator movement.
- Visually inspect system connectors for moisture ingress, corrosion, and proper contact.
- Check for excessive backlash in the gate mechanism.
- Remove the screws retaining the U-arm to the actuator shaft. Verify alignment, refer to *iBR MECHANISM ALIGNMENT VERIFICATION*.

PROCEDURES

iBR LEVER SENSOR (BRLS)

BRLS Test Using B.U.D.S.

NOTE: The BRLS is composed of a twin hall effect sensor. A resistance test of the sensor cannot be carried out.

1. Connect watercraft to the latest B.U.D.S. software, refer to *COMMUNICATION TOOLS AND B.U.D.S.*
2. Check for an applicable fault code, refer to *DIAGNOSTIC AND FAULT CODES*.
3. If a fault is indicated, follow service actions as indicated in B.U.D.S.

BRLS Voltage Test

Test for BRLS input voltage as well as BRLS signal voltages as per following steps.

Models with Suspension

1. Press the START/STOP button.
2. Install the tether cord on the engine cut-off switch to energize the electrical system.

NOTE: DO NOT start the engine.

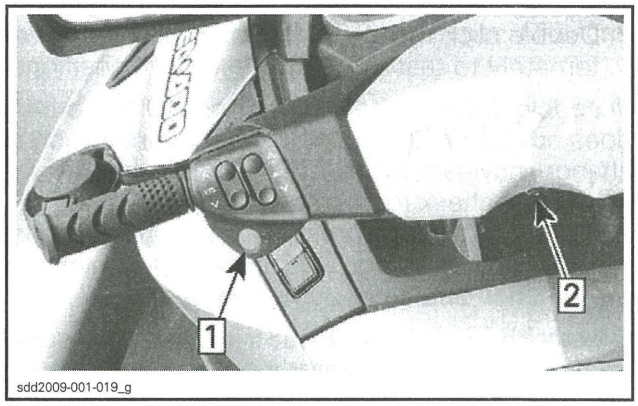

Step 1: Press START/STOP button
Step 2: Install tether cord

NOTE: Briefly press the START/STOP button to reactivate the electrical system when required.

3. Set the suspension to its maximum height. This will provide better access to the steering connectors.

NOTE: If more height is required or if the iS system cannot be used, manually lift the suspension using a hoist and the anchor points close to handlebars. Then safety lock it in the up position.

NOTICE Do not lift the watercraft using the anchor points.

4. Remove the tether cord and wait approximately 3 minutes for the electrical system power to shut off.

All Models

5. Open the front storage compartment cover and remove the storage bin.

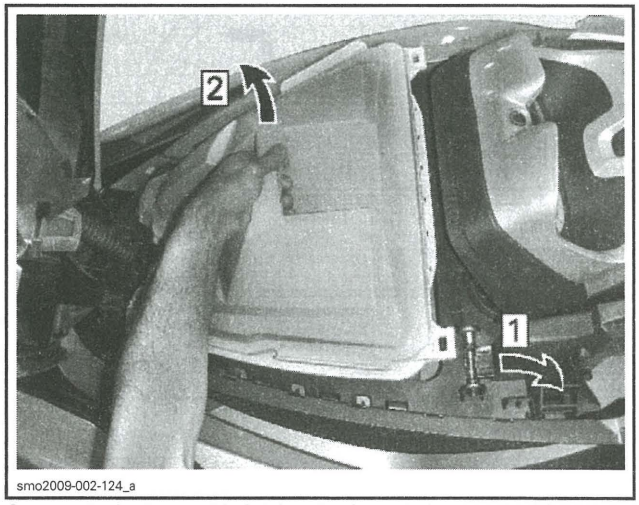

Step 1: Push storage bin latches backwards (one each side)
Step 2: Lift and tilt forward to remove storage bin

Models Without Suspension

6. Disconnect the top of the two front air ventilation hoses, refer to *BODY* subsection.

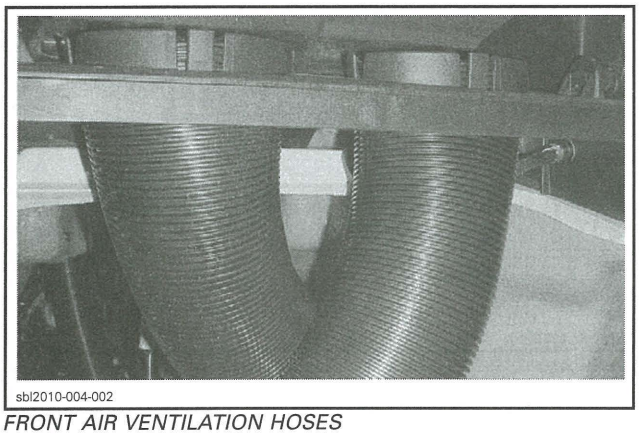

FRONT AIR VENTILATION HOSES

All Models

7. Reach in through the storage bin opening under the steering area and disconnect the 24-pin steering connector.

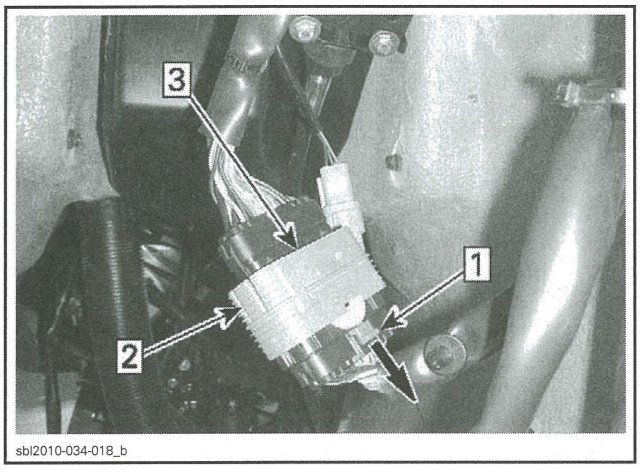

TYPICAL - 24-PIN STEERING CONNECTOR DISCONNECT
Step 1: Pull out safety lock
Step 2: Press in on release tab
Step 3: Pull locking collar down

8. Connect the DIAGNOSTIC HARNESS (P/N 529 036 188) in series between the disconnected steering connectors.

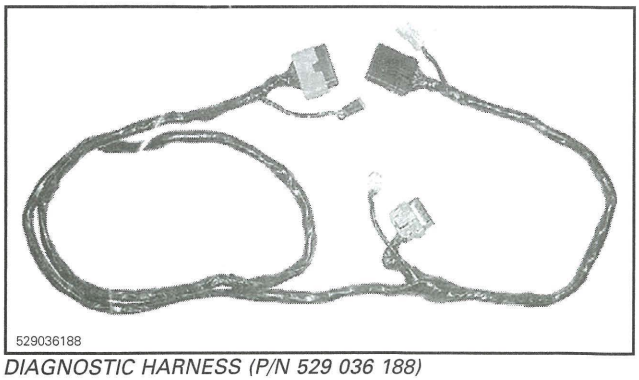

DIAGNOSTIC HARNESS (P/N 529 036 188)

9. Press the START/STOP button to wake up the electrical system.
10. Install the tether cord on the engine cut-off switch.

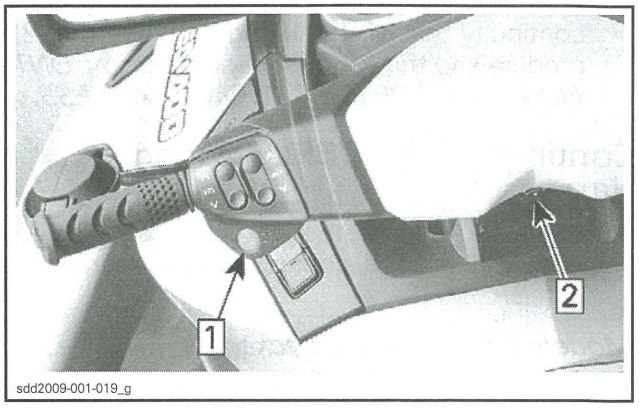

Step 1: Press START/STOP button
Step 2: Install tether cord

NOTE: Briefly press the START/STOP button to reactivate the electrical system when required.

11. Using a FLUKE 115 MULTIMETER (P/N 529 035 868) set to Vdc, measure the BRLS voltages from the test connector of the diagnostic harness as per following tables.

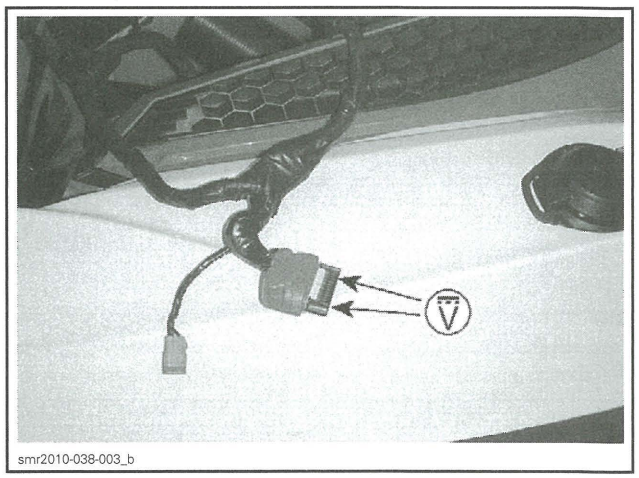

TEST CONNECTOR OF DIAGNOSTIC HARNESS

TEST CONNECTOR OF DIAGNOSTIC HARNESS		iBR LEVER RELEASED	iBR LEVER PULLED IN
PINS		VOLTAGE (Vdc)	
21	15	4.9 - 5.1	
22	16		
15	18	0.15 - 0.35	1.4 - 1.6
19	16	0.4 - 0.6	2.9 - 3.1

12. If voltage measured is as specified, the BRLS sensor is functioning properly.

NOTE: When moving iBR lever, BRLS voltage change should increase or decrease in a steady linear fashion.

13. If voltage is out of specification, carry out a continuity test of the wiring between the iBR module and the BRLS sensor, refer to *CONTINUITY TEST OF BRLS WIRING HARNESS*.

Continuity Test of BRLS Wiring Harness

1. Ensure the 24-pin steering connector pins are clean, make good contact, and properly connected.

Models Without the X Package

2. Remove the steering cover, refer to *STEERING AND O.T.A.S.* subsection.

Models with the X Package

3. Remove the upper housing and housing cover from the LH handlebar housing, refer to *STEERING AND O.T.A.S.* subsection.

All Models

4. Disconnect the BRLS connector.

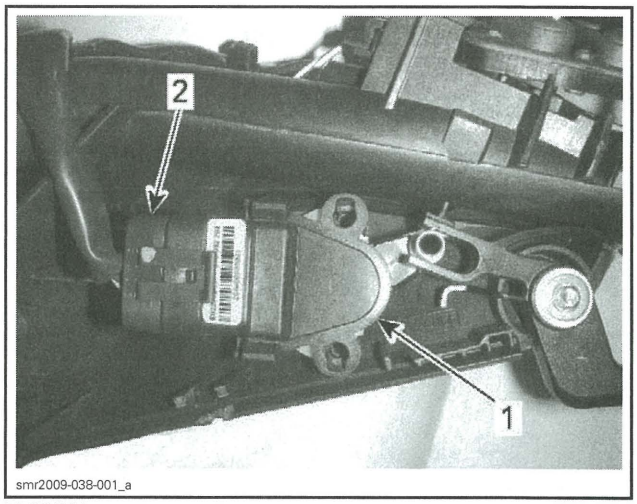

TYPICAL
1. BRLS
2. BRLS connector

Disconnect the 12-pin connector from the iBR actuator. Refer to *IBR ACTUATOR CONNECTORS ACCESS* in this subsection.

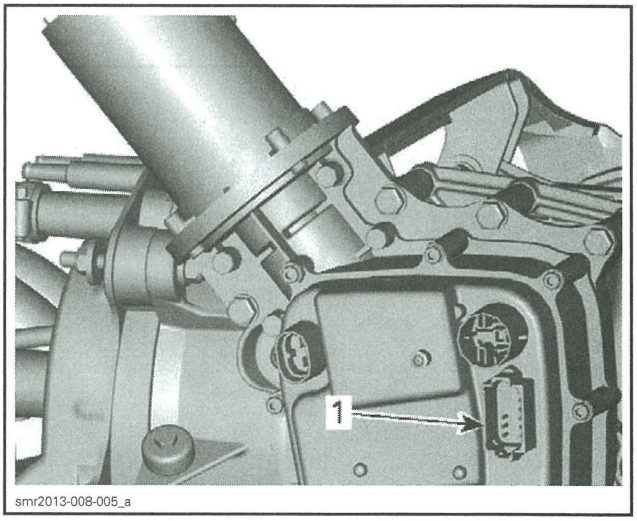

1. 12-pin connector

5. Measure for continuity from the BRLS connector to the 12-pin iBR actuator connector as per following table.

CONTINUITY TEST OF BRLS WIRING HARNESS		
BRLS CONNECTOR	12 PIN iBR CONNECTOR	RESISTANCE
Pin A (VI/BE)	Pin 4 (VI/BE)	Close to 0 Ω (continuity)
Pin B (BK)	Pin 6 (BK)	
Pin C (YL/BR)	Pin 8 (YL/BR)	
Pin D (VI/BE)	Pin 7 (VI/BE)	
Pin E (BK)	Pin 9 (BK)	
Pin F (YL/WH)	Pin 5 (YL/WH)	

If continuity is good, replace BRLS.

If an open circuit or a higher than normal resistance is measured, carry out the continuity tests in the following tables to find the problem wire or connection:

- From the BRLS to the 24-pin steering connector
- From the steering connectors to the iBR actuator 12 pin connector.

6. Connect the DIAGNOSTIC HARNESS (P/N 529 036 188) to the steering connector **(steering side only)**.

NOTE: Resistance readings may be slightly higher than normal (maximum .5 Ω) when measuring from the test connector on the diagnostic harness.

CONTINUITY TEST BRLS TO 24-PIN STEERING CONNECTOR		
BRLS	TEST CONNECTOR	RESISTANCE
Pin A (VI/BE)	Pin 21 (VI/BE)	Close to 0 Ω (continuity)
Pin B (BK)	Pin 15 (BK)	
Pin C (YL/BR)	Pin 18 (YL/BR)	
Pin D (VI/BE)	Pin 22 (VI/BE)	
Pin E (BK)	Pin 16 (BK)	
Pin F (YL/WH)	Pin 19 (YL/WH)	

7. Connect the DIAGNOSTIC HARNESS (P/N 529 036 188) to the steering connector **(vehicle side only)**.

CONTINUITY TEST STEERING CONNECTORS TO iBR CONNECTOR		
TEST CONNECTOR	12 PIN iBR	RESISTANCE
Pin 22 (VI/BE)	Pin 7 (VI/BE)	Close to 0 Ω (continuity)
Pin 16 (BK)	Pin 9 (BK)	
Pin 19 (YL/WH)	Pin 5 (YL/WH)	
Pin 21 (VI/BE)	Pin 4 (VI/BE)	
Pin 15 (BK)	Pin 6 (BK)	
Pin 18 (YL/BR)	Pin 8 (YL/BR)	

8. Repair or replace wiring/connector as required.

BRLS Removal

Models Without the X Package

1. Remove steering cover, refer to *STEERING AND O.T.A.S.* subsection.

Models with the X Package

2. Remove the upper housing and housing cover from the LH handlebar housing, refer to *STEERING AND O.T.A.S.* subsection.

All Models

3. Open the sensor retaining tabs.
4. Pull up on the connector end of the BRLS.
5. Gently pull the sensor from its support and the iBR lever. Depress the lever as required to ease sensor removal.

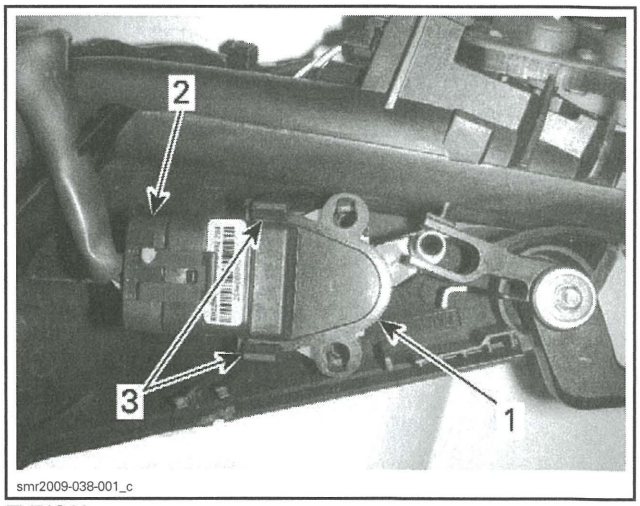

TYPICAL
1. *BRLS*
2. *BRLS connector*
3. *Sensor retaining tabs*

6. Remove connector from the BRLS.

BRLS Installation

Models Without the X Package

1. Install BRLS sensor in the reverse order of removal.
2. Ensure wiring harness is properly routed through slot provided in sensor support before installing steering cover.

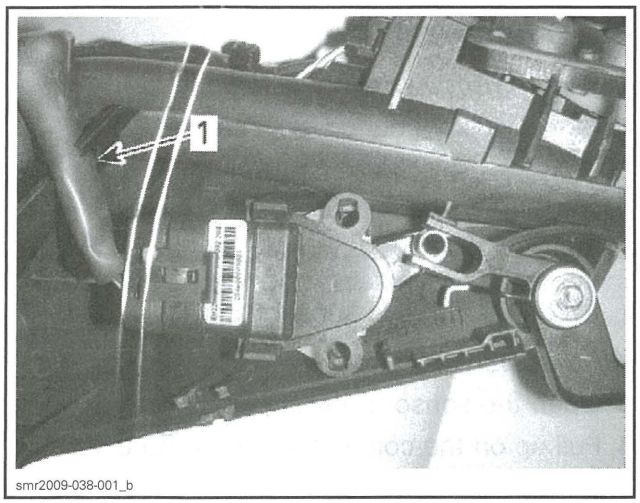

1. Wire harness routed in slot

3. Ensure there are no fault codes. Connect watercraft to the latest B.U.D.S. software, refer to *DIAGNOSTIC AND FAULT CODES*.
4. Carry out an *iBR SYSTEM FUNCTIONAL TEST* using the iBR lever (engine must be running).

Models with the X Package

Install BRLS sensor in the reverse order of removal. However, pay attention to the following:

1. Install connector on BRLS and ensure wiring is properly positioned in handlebar housing.

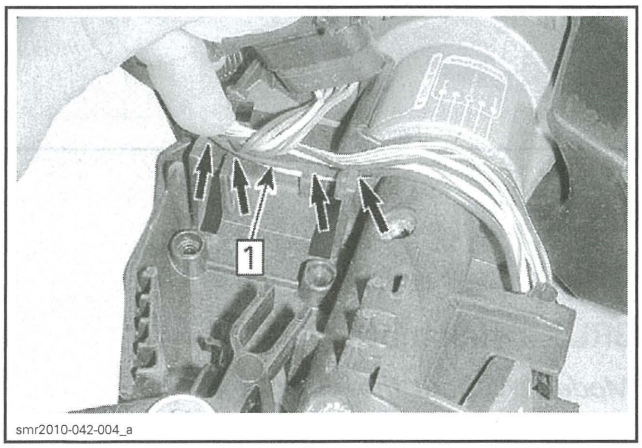

Step 1: Ensure proper wire routing

2. Insert the BRLS in the iBR lever.
3. Align the BRLS in the housing, then press it into the housing until both locking tabs engage. Ensure it is properly locked in place.
4. Ensure wiring is not pinched.
5. Position the housing cover onto the handlebar housing.
6. Ensure positioning of corrugated conduit

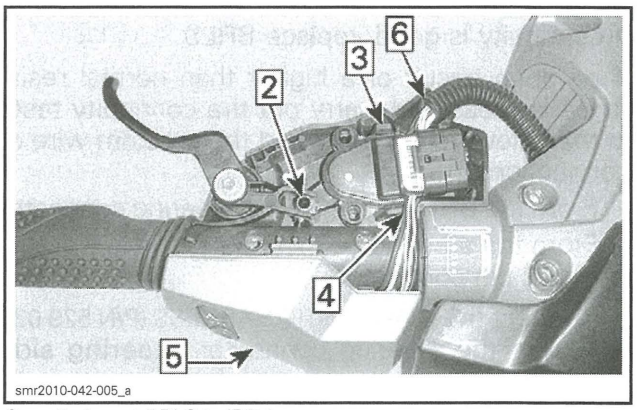

Step 2: Insert BRLS in iBR lever
Step 3: Ensure locking tab engagement
Step 4: Ensure wiring is not pinched
Step 5: Install housing cover
Step 6: Ensure proper corrugated conduit positioning

7. Position the upper housing onto the handlebar.
8. Ensure proper engagement of the housing and cover tabs.

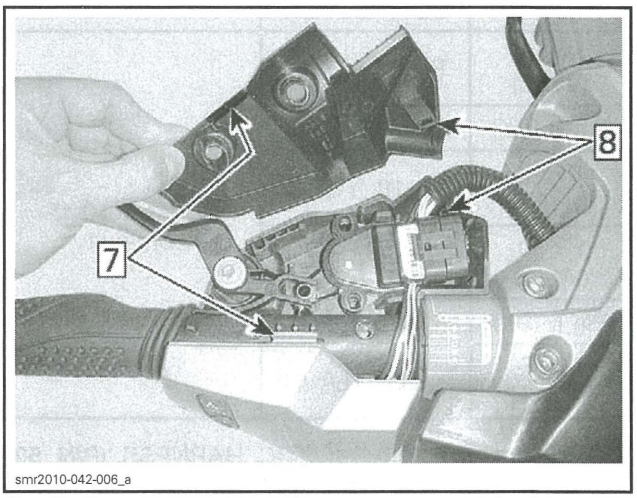

Step 7: Ensure engagement of housing cover retaining tabs
Step 8: Ensure engagement of upper housing locking tabs

9. Install the three retaining screws for the upper housing and torque them to 2 N•m (18 lbf•**in**).
10. Ensure there are no fault codes. Connect watercraft to the latest B.U.D.S. software, refer to *DIAGNOSTIC AND FAULT CODES*.
11. Carry out an *iBR SYSTEM FUNCTIONAL TEST* using the iBR lever (engine must be running).

iBR ACTUATOR

NOTICE **The iBR actuator motor must never be tested by applying 12 Vdc directly to it's connector. Doing so may cause a lock-up and damage internal actuator components, necessitating replacement of the iBR actuator assembly.**

iBR Actuator Operation Test Using B.U.D.S.

1. Connect watercraft to the latest B.U.D.S. software, refer to *COMMUNICATION TOOLS AND B.U.D.S.*
2. Click the **Read Data** button.
3. Check for applicable fault codes on the **Faults** page.
4. Click the **Activation** tab.
5. In the lower LH corner, click the **iBR** tab.

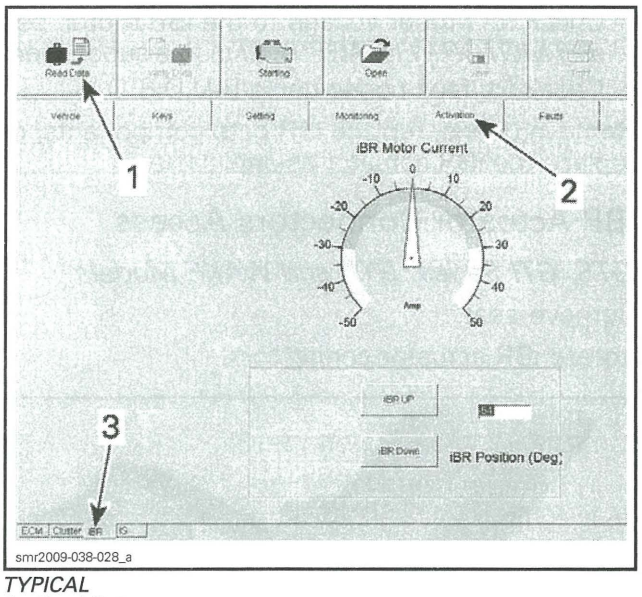

TYPICAL
1. *Read Data*
2. *Activation tab*
3. *iBR tab*

6. In B.U.D.S., click **iBR UP** and **iBR DOWN** buttons alternately and look for a change in **iBR Position (Deg)**.

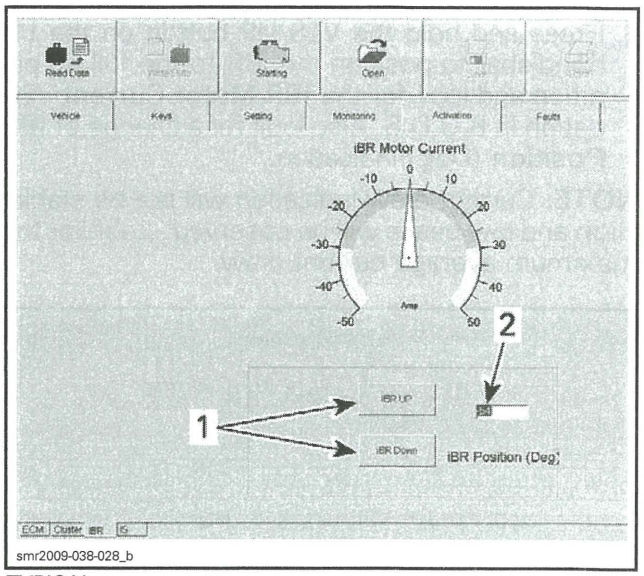

TYPICAL
1. *iBR UP/DOWN buttons*
2. *iBR position indication*

If the iBR moves using these buttons but does not move using the iBR lever, refer to *BRLS VOLTAGE TEST* in this subsection.

If the iBR does not move, check the iBR fuses (F5 and F17) in fuse box. If fuse are good, refer to *iBR ACTUATOR INPUT VOLTAGE TEST* in this subsection.

iBR Actuator Motor Current Test Using B.U.D.S.

1. On the iBR activation page in B.U.D.S., note the **iBR Position (Deg)** indication.

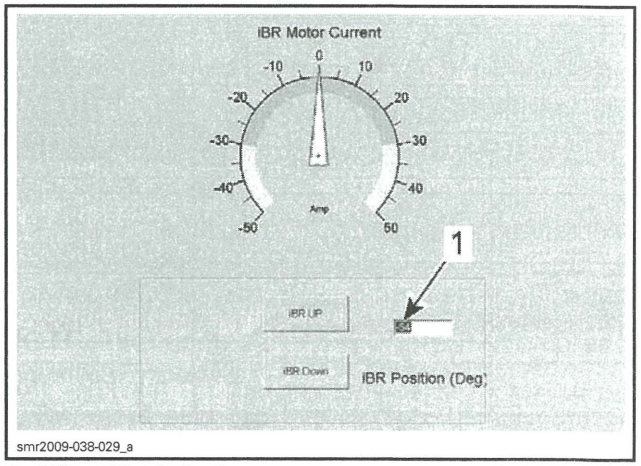

1. *iBR position indication*

2. Activate the iBR override function, refer to *iBR OVERRIDE FUNCTION* in the beginning of this subsection.

3. Press and hold the VTS UP button on the LH handlebar to position the iBR to the full up position and look for the **iBR Motor Current** indication in B.U.D.S. Also look for a change of **iBR Position (Deg)** indication.

NOTE: Current draw indication will not be stable. High and low peaks will be observed. Look for the maximum average current draw.

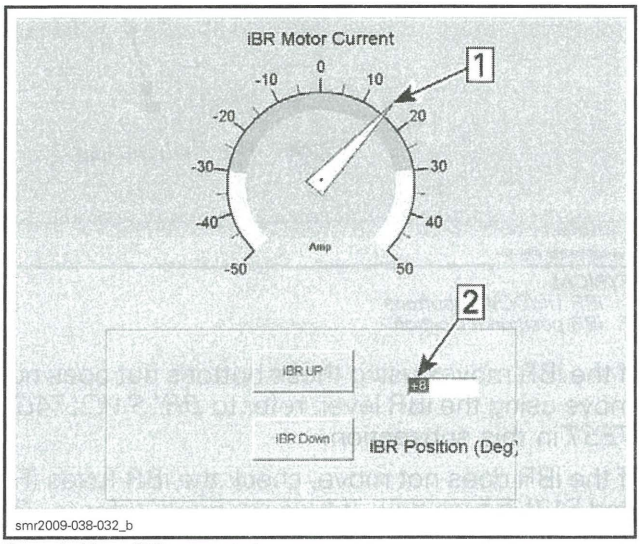

Step 1: Note iBR current draw
Step 2: Note iBR position indication change

4. Press and hold the VTS DOWN button and look for the **iBR Motor Current** draw indication. Also look for a change of **iBR Position (Deg)** indication.

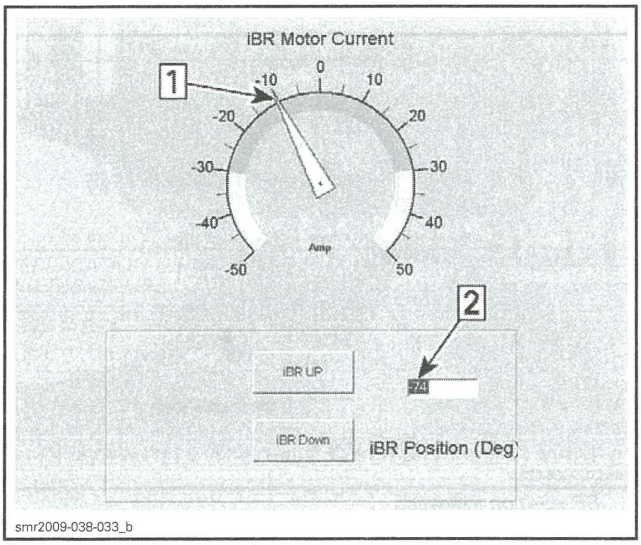

Step 1: Note iBR current draw
Step 2: Note iBR position indication change

iBR ACTUATOR CURRENT DRAW	
DOWN SELECTION	-5 to -15 A
UP SELECTION	+10 to +20 A

If current draw is abnormally high (between 20 and 30 A), check the following:

- Ensure iBR gate is free of debris.
- Remove the screws retaining the U-arm to the actuator shaft. Check for excessive friction in gate movement.
- Check iBR gate friction sleeves and bushings.
- Check for proper voltage to the iBR motor, see *iBR MOTOR VOLTAGE TEST* in this subsection.
- Check for fault codes using B.U.D.S.

Remove debris, replace iBR gate components, or replace the iBR actuator as applicable.

iBR Actuator Connectors Access

GTS, GTI Series, GTR and WAKE Models

Remove seat.

Locate iBR actuator connectors.

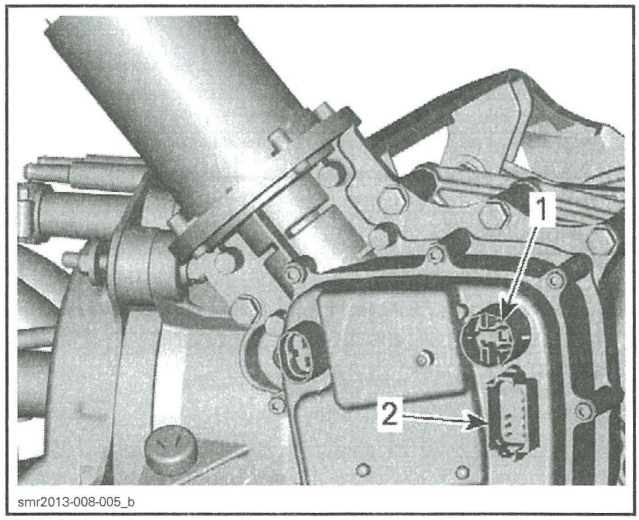

TYPICAL
1. 3-pin connector
2. 12-pin connector

RXP-X Series

Remove iBR ACTUATOR from hull. See procedure in this subsection.

Locate iBR actuator connectors.

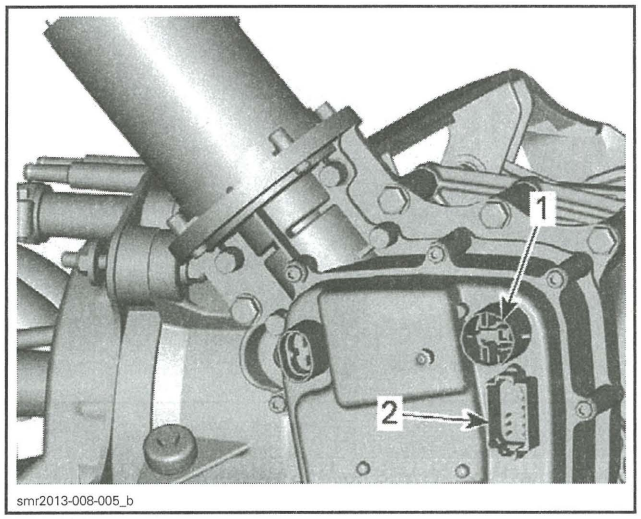

TYPICAL
1. 3-pin connector
2. 12-pin connector

GTX/RXT Series Without Suspension and Wake Pro

Open LH access panel.

Locate iBR actuator connectors.

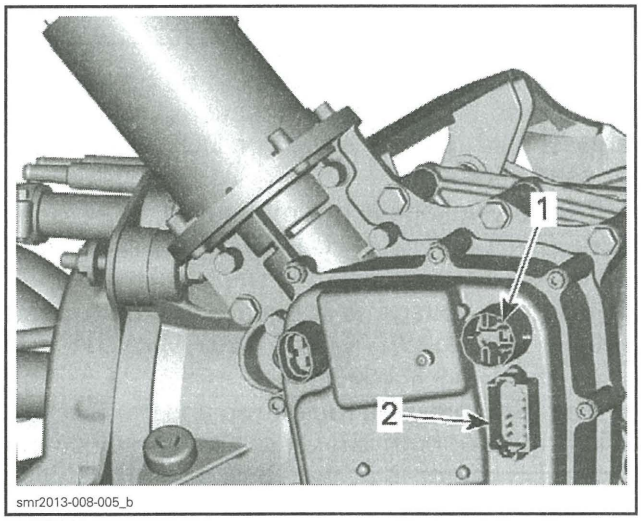

TYPICAL
1. 3-pin connector
2. 12-pin connector

GTX/RXT Series with Suspension

Open the boarding platform and remove the LH storage bin.

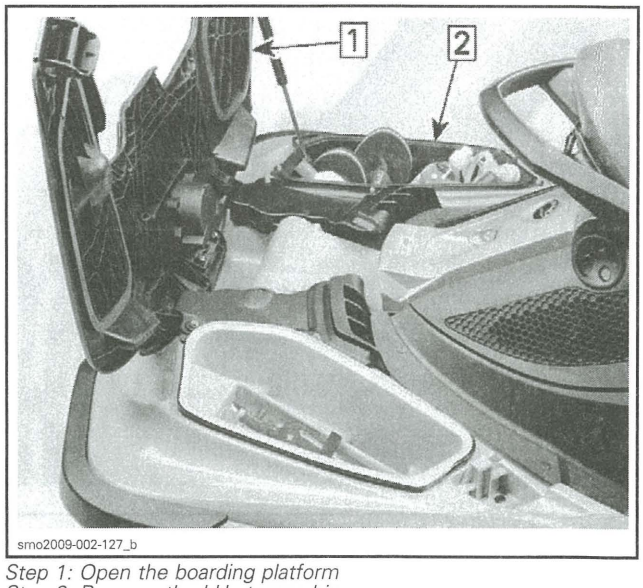

Step 1: Open the boarding platform
Step 2: Remove the LH storage bin

Locate iBR actuator connectors.

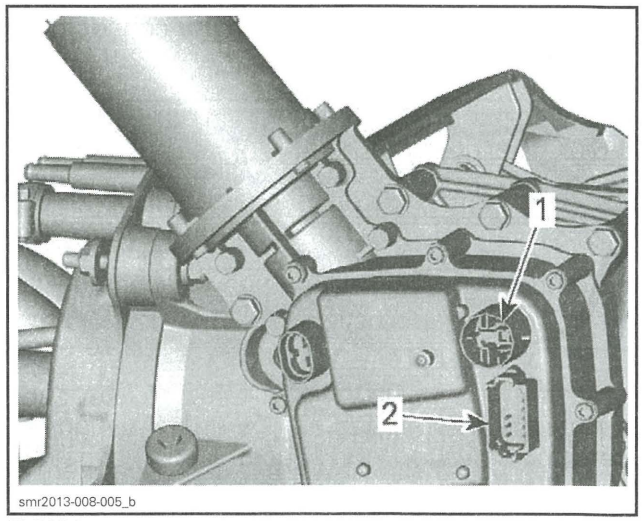

TYPICAL
1. 3-pin connector
2. 12-pin connector

iBR Motor Voltage Test

1. Disconnect the 2-pin connector on iBR module. Refer to *IBR ACTUATOR CONNECTORS ACCESS* in this subsection.

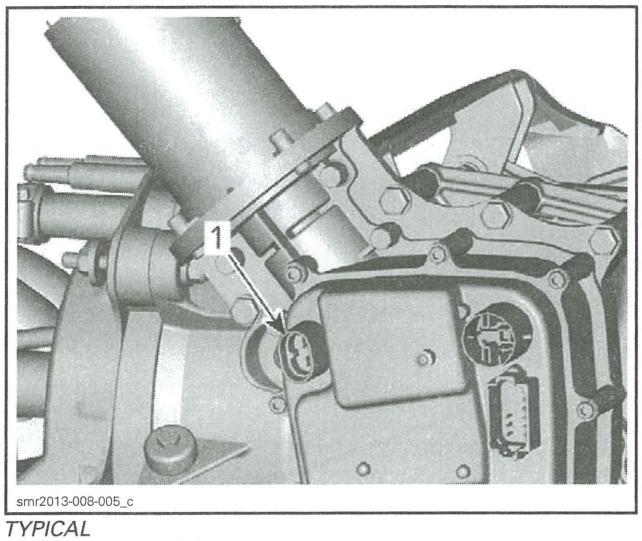

TYPICAL
1. iBR motor module connector

2. Set the FLUKE 115 MULTIMETER (P/N 529 035 868) to Vdc selection.
3. Install insulated clips on the multimeter leads and clip leads to pins in the motor connector on the iBR module.

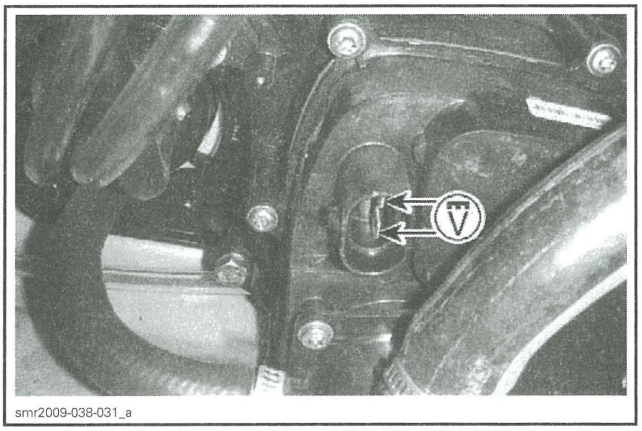

TEST OF iBR MODULE OUTPUT VDC TO iBR MOTOR

GTI Series, GTR, Wake and RXP X Series

Temporary install test wires with a connector to the motor connector on the iBR module. Measure voltage on test wires.

All Models

4. Using the iBR override function (see *SYSTEM DESCRIPTION (iBR* in this subsection), press the VTS UP button and read the iBR module motor output voltage.

NOTE: The iBR UP button on the iBR Activation page in B.U.D.S. may be used instead of the iBR override function.

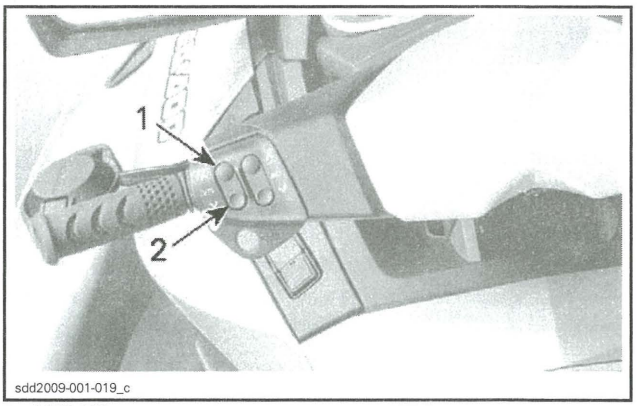

1. VTS UP
2. VTS DOWN

NOTE: Briefly press the START/STOP button to reactivate the electrical system when required.

5. Press the VTS DOWN button and read the iBR module motor output voltage.

NOTE: The iBR DOWN button on the iBR Activation page in B.U.D.S. may be used instead of the iBR override function.

iBR MOTOR VOLTAGE TEST
Battery voltage (over 12 Vdc)

NOTE: Voltage measured should be battery voltage in both UP or DOWN directions. Voltage polarity should reverse as UP or DOWN button is pressed alternately.

- If battery voltage **is not measured**, refer to *iBR ACTUATOR INPUT VOLTAGE TEST* in this subsection.
- If battery voltage **is measured** in both directions, refer to *iBR POWER TEST USING A TEST LIGHT* in this subsection.
- If battery voltage **is measured** and the test light is **bright** for both iBR UP or DOWN selections, the iBR motor is at fault and the iBR actuator must be replaced.
- If battery voltage **is low** or test light is **dim in both** directions, refer to *iBR ACTUATOR INPUT VOLTAGE TEST* in this subsection.
- If battery voltage **is measured** and test light is **dim in one** direction, replace the iBR actuator.

iBR Power Test Using a Test Light

1. Connect the clip of a 12 Vdc test light to the battery ground (or engine ground).
2. Touch the test light probe to each pin of the motor output connector on the iBR module as you select the iBR UP and DOWN alternately.

The test light should come on bright for one pin only in each direction.

NOTE: The 12 Vdc and ground will alternate between pins with a change of iBR direction.

iBR Actuator Input Voltage Test

RXP X Series

Detach iBR actuator from hull. Refer to *IBR ACTUATOR REMOVAL* in this subsection.

All Models

1. Disconnect the 3-pin and 12-pin connectors from the iBR module. refer to *IBR ACTUATOR REMOVAL* in this subsection.

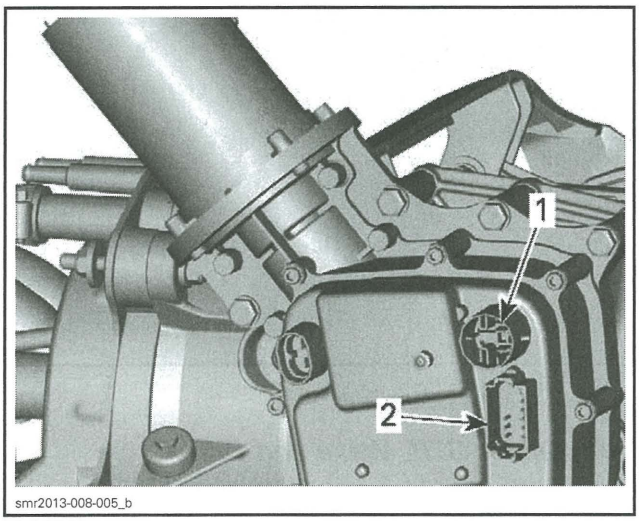

TYPICAL
1. 3-pin connector
2. 12-pin connector

2. Set the FLUKE 115 MULTIMETER (P/N 529 035 868) to Vdc selection.
3. Measure for the battery input voltage (through fuse F5) to the iBR actuator as per following table.

iBR ACTUATOR INPUT VOLTAGE TEST (30 AMP BATTERY POWER)			
3 PIN CONNECTOR		BATTERY	READING
Pin 2	Pin 1	–	Battery voltage
Pin 2	–	Neg. (-) post	

NOTE: The 3-pin connector provides battery power directly to the iBR module for the actuator motor through the fuse F5.

If battery voltage is not measured, check the following:

- iBR fuse F5 in fuse box
- Battery voltage at fuse contact B4 of fuse box
- Wire continuity from pin 2 of iBR 3-pin connector to A4 of fuse box
- Jumper continuity fuse contact B4 to C3 of 12 Vdc bus-bar in fuse box.

If voltage is good to the negative battery post but not to pin 1 of the connector (ground wire to engine), check for an open or bad ground wire (loose, corroded, or pitted terminals, wire continuity, etc.)

If battery voltage measured is as specified, carry out same test using a 12 Vdc test light. Test light should be bright.

If test light is not bright to pin 1 only, look for a bad contact on the ground circuit (loose, corroded, pitted, etc.).

If test light is not bright to the negative battery post, first check voltage at battery terminals to ensure battery is not discharged. If battery voltage is good, look for a bad contact in the 30 amp 12 V iBR power circuit (loose, corroded, pitted, etc.).

If the 30 amp 12 Vdc power to the iBR actuator is good, test for the switched 5 amp 12 Vdc as per following steps.

4. Briefly press the START/STOP button to wake the electrical system.

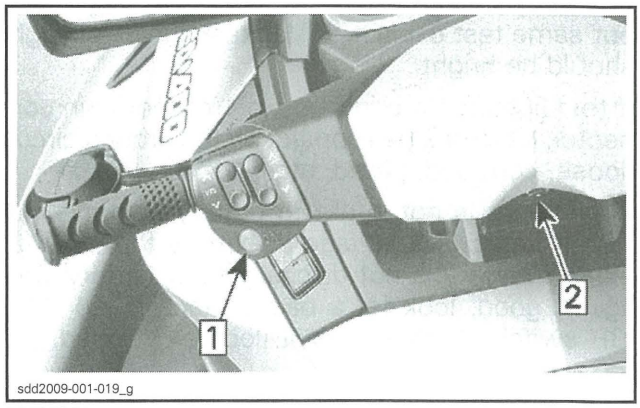

TYPICAL
Step 1: Press START/STOP button
Step 2: Install D.E.S.S. key

5. Measure for the switched input voltage to the iBR actuator as per following table.

iBR ACTUATOR INPUT VOLTAGE TEST (5 AMP SWITCHED)			
iBR CONNECTORS		BATTERY	READING
12 PIN	3 PIN		
Pin 1	Pin 1	-	Battery voltage
Pin 1	-	Neg. (-) post	

NOTE: The 12 pin connector provides BRLS signals, CAN bus, and a switched 12 Vdc power to the iBR module through the fuse F17.

If battery voltage is not measured at all, check the following:

- iBR control (CRTL) fuse F17 in fuse box
- Battery voltage at fuse contact E3 of fuse box
- Wire continuity from pin 1 of iBR 12-pin connector to F3 of fuse box
- Jumper continuity fuse contact E3 to D3 of 12 Vdc accessory bus-bar in fuse box.

If voltage is good to the negative battery post but not to pin 1 of the connector (ground wire to engine), check for an open or bad ground wire (loose, corroded, or pitted terminals, wire continuity, etc.).

If battery voltage measured is as specified, carry out same test using a 12 Vdc test light. Test light should be bright.

If test light is not bright to pin 1 of the 3 pin connector, look for a bad contact on the ground circuit (loose, corroded, pitted, etc.).

If test light is not bright to battery negative terminal, first check voltage at battery terminals to ensure battery is not discharged. If battery voltage is good, look for a bad contact in the 12 V iBR switched power circuit (loose, corroded, pitted, etc.).

If the iBR actuator input voltages and ground circuit are good, and there is no CAN bus or BRLS fault, replace the iBR actuator.

iBR Actuator Removal

All Models

1. Move the iBR gate to the forward position (full up) using the *iBR OVERRIDE* function. Refer to *SYSTEM DESCRIPTION (iBR)* in this subsection.

NOTICE **Do not try to manually force the iBR gate when all components are installed.**

⚠ CAUTION Remove iBR fuse (F5) before working in the iBR gate area. Refer to *POWER DISTRIBUTION*.

All Models

From Jet Pump Area

2. Remove and discard 2 bolts coupling iBR actuator to U-arm.

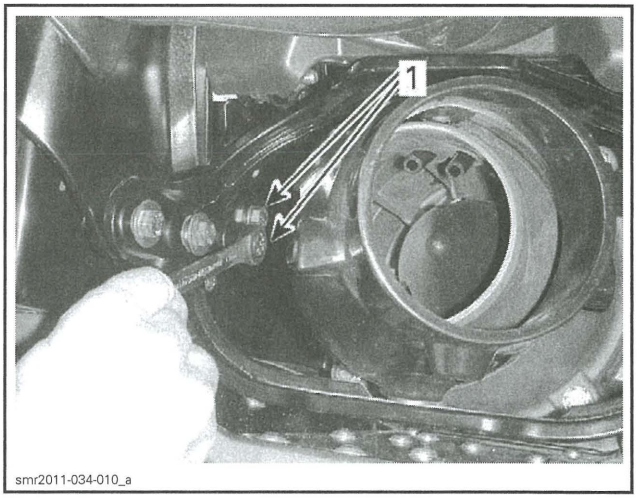

TYPICAL
1. *Remove and discard screws*

GTI Series, GTR, Wake and RXP-X

3. Remove seat.
4. Remove passenger handles. Refer to *BODY*.
5. Remove exhaust pipe. Refer to *EXHAUST SYSTEM* in 2012 shop manual.

From Inside Bilge

6. Cut locking tie.
7. Disconnect hose from muffler.
8. Move hose end away.

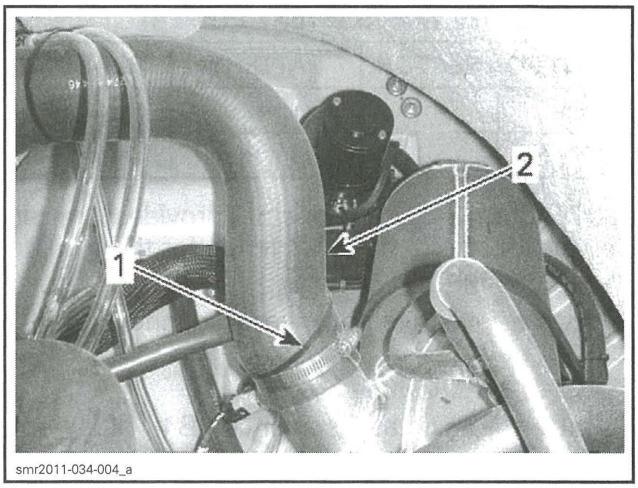

1. *Cut locking tie*
2. *Disconnect hose*

RXP-X

9. Remove muffler.

GTX/RXT Series and Wake Pro Models

10. Disconnect the two aft electrical connectors from the iBR actuator. Refer to *IBR ACTUATOR CONNECTORS ACCESS* in this subsection.

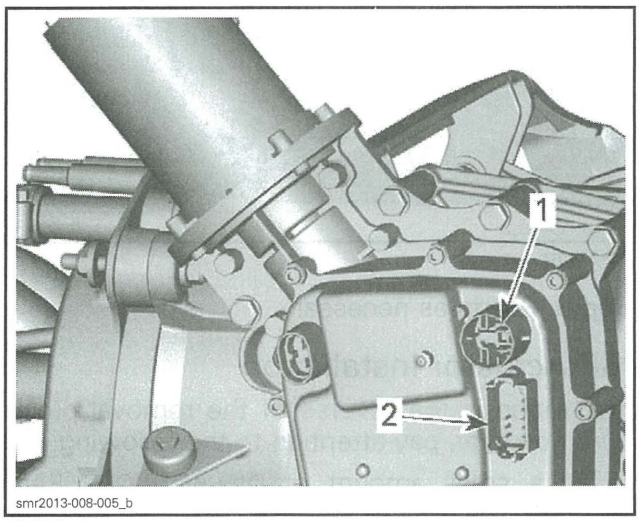

TYPICAL
1. *iBR actuator 3 pin connector*
2. *iBR actuator 12 pin connector*

All Models

11. Remove and discard iBR actuator retaining screws.

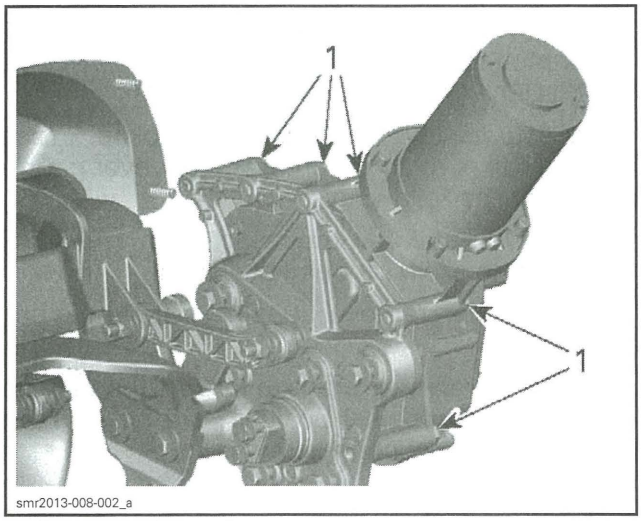

1. *Remove and discard screws*

12. Pull out iBR actuator while leaving LH support plate in place.

NOTE: It is very important to leave support plate installed at its original position. Do not remove support plate mounting screws.

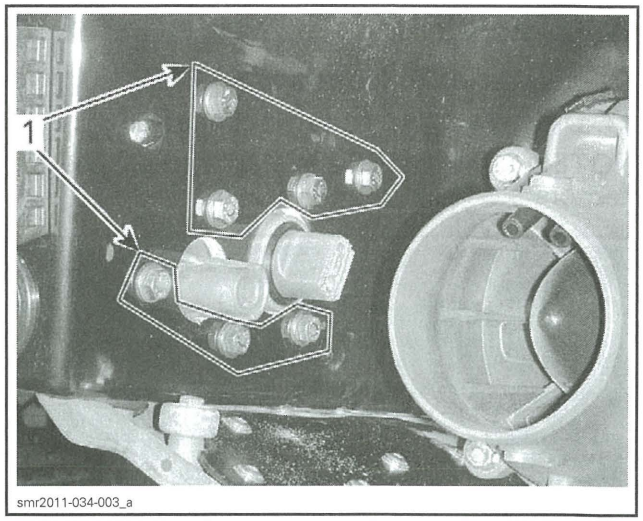

1. *Do not remopve these screws*

NOTE: It may be necessary to pry out iBR actuator.

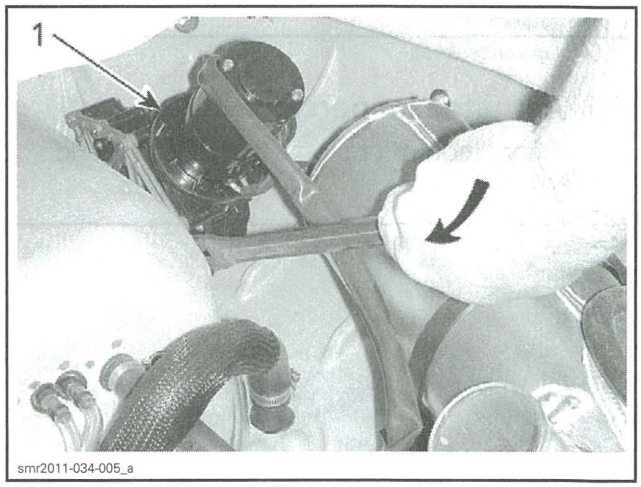

PRYING iBR ACTUATOR
1. *iBR actuator*

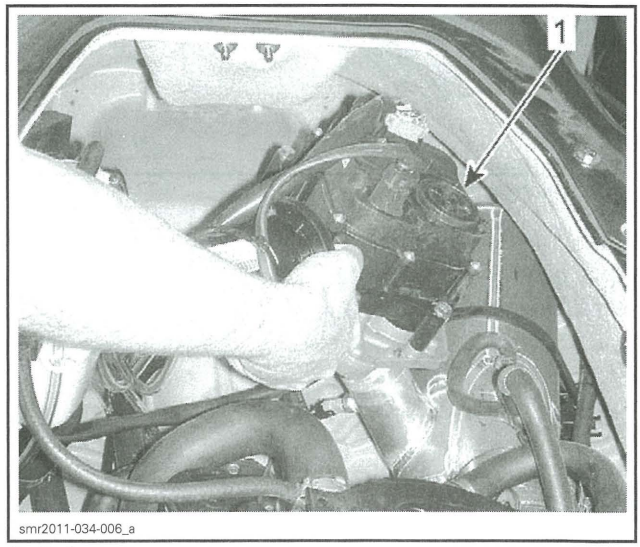

1. *Pull out*

13. Cut locking tie.

GTI Series, GTR, Wake and RXP-X

14. Disconnect the indicated connectors.

NOTE: Pull on the iBR actuator to access the connectors.

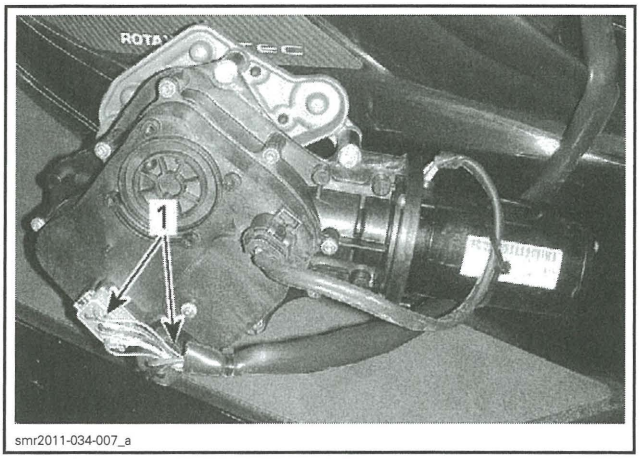

1. Unplug connectors

iBR Actuator Inspection

Check condition of ribs on actuator shaft end and in U-arm.

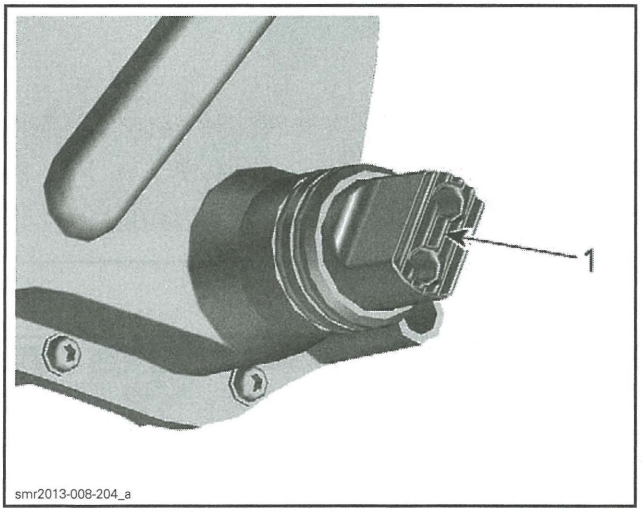

1. Actuator shaft ribs

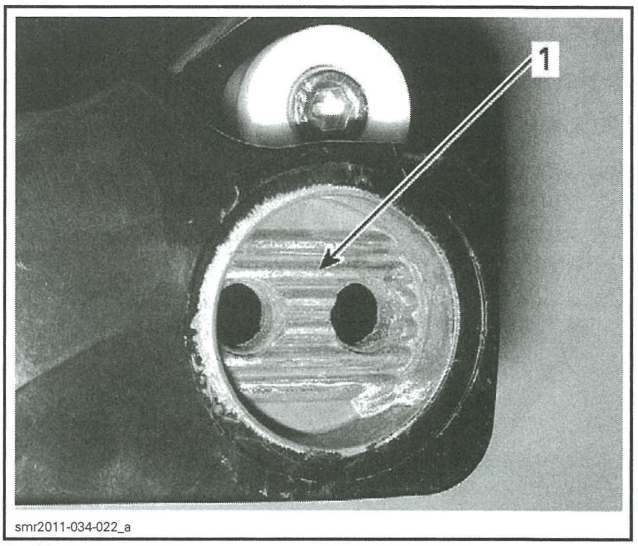

1. U-arm ribs

Replace parts as necessary.

iBR Actuator Installation

Installation is the reverse of the removal procedure however, pay attention to the following.

Apply a small amount of DIELECTRIC GREASE (P/N 293 550 004) to the connector pins before plugging the connectors to the iBR actuator.

RXP-X, GTI Series, GTS and Wake

IMPORTANT: Connect connectors to iBR module before installing iBR actuator to support plate.

All Models

Install new screws with threadlocker (or clean actuator mounting screw threads and apply LOCTITE 243 (BLUE) (P/N 293 800 060) on threads).

Install actuator shaft through support plate. Installation is the reverse of removal. However pay attention to the following:

1. Loosely install all new actuator mounting screws to allow proper installation.

NOTE: Do not remove support plate mounting screws.

NOTE: It is very important to leave support plate installed at its original position. Do not remove support plate mounting screws.

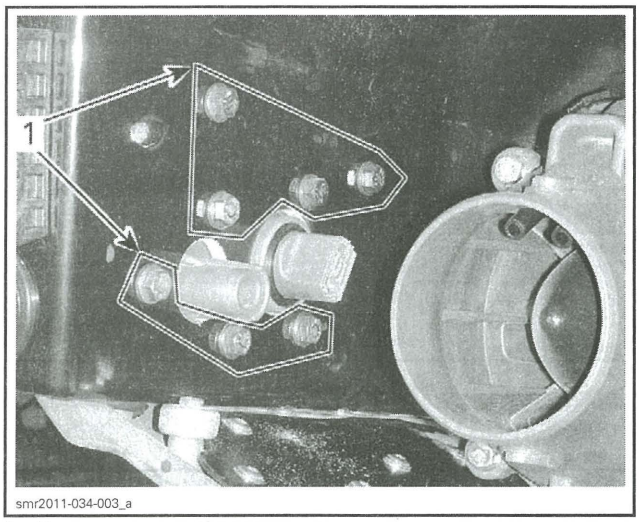

1. Do not remopve these screws

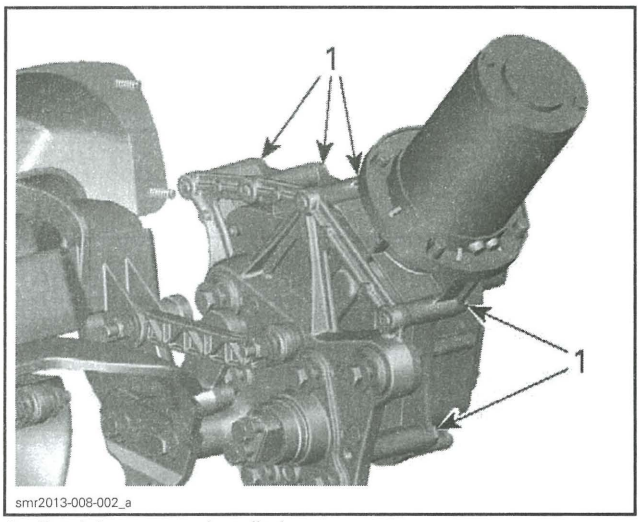

1. Retaining screws installed

2. Make sure iBR actuator shaft is fully pushed in place.
3. Tighten retaining screws to specifications.
4. Remainder of installation is the reverse of removal procedure. Install new fasteners when required.

TIGHTENING TORQUE
12 N•m (106 lbf•**in**)

Clean iBR shaft screw threads and install new screws with threadlocker.

Secure U-arm to iBR shaft.

Reinstall iBR fuse.

If installing a NEW iBR actuator, refer to *iBR ACTUATOR REPLACEMENT* in this subsection.

Check watercraft in water for water tightness.

iBR Actuator Replacement

To allow proper operation of a NEW iBR actuator, refer to *ECM, CLUSTER AND IBR UPDATES*.

ECM, Cluster And IBR Updates

Four reflash operations (2 reflash on GTS models) will be done in the order given in the following table.

You will be automatically prompted to start the reflash operation after you click the Read Button within B.U.D.S.

MODULE	APPROXIMATE TIME FOR THE REFLASH
1. ECM	6 minutes
2. Cluster	30 seconds
3. iBR (not applicable to GTS models)	20 seconds
4. iBRMON (not applicable to GTS models	20 scconds
Total time	**7 minutes**

After each module reflash, the module will be automatically re-read by B.U.D.S. If the following message appears at this moment, do the following:

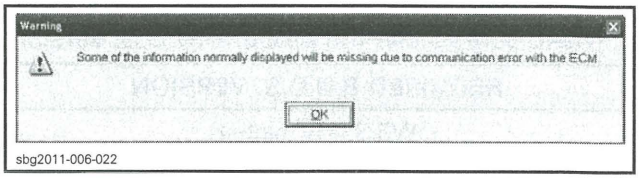

1. Press the watercraft START button.
2. In B.U.D.S., click "OK" in the message box.
3. You can normally continue the update process.

IMPORTANT: In case of problem updating a module, please contact the BRP technical support team.

The keys already programmed should remain programmed after the updates.

NOTICE

Continuous power to the computer and to the watercraft is mandatory during this operation.

Be sure to disable the computer screen saver.

If using a portable computer, be sure to provide a continuous supply of electrical power by connecting it to a wall outlet.

These software updates of the watercraft modules will take some time to complete and MUST NOT be interrupted or damage to a module could occur.

Although computer screen may go blank or may seem to freeze for a while, do NOT interrupt B.U.D.S. to allow updates to be completed.

1. Ensure the watercraft battery is fully charged.
2. Connect a portable power pack (fully charged) to the watercraft battery to ensure there is enough power to complete the software updates. The use of the portable power pack is required to avoid potential communication problems during the update.

NOTICE NEVER use a battery charger instead of portable power pack. The battery charger may cause electrical noise causing many problems during the update.

3. Make sure to use the proper B.U.D.S. version.

REQUIRED B.U.D.S. VERSION
W3.3.3 or higher

4. Connect MPI before starting B.U.D.S. to ensure proper operation. Refer to *2011 SHOP MANUAL* for details:
   - Section 03: *ELECTRONIC MANAGEMENT SYSTEMS*
   - Subsection 04: *COMMUNICATION TOOLS AND B.U.D.S.*
5. Push the START button briefly.
6. Install tether cord on engine cut-off switch.
7. Start B.U.D.S. and logon.

NOTE: If the following message does not automatically vanish, click the button: **Try active detection mode**.

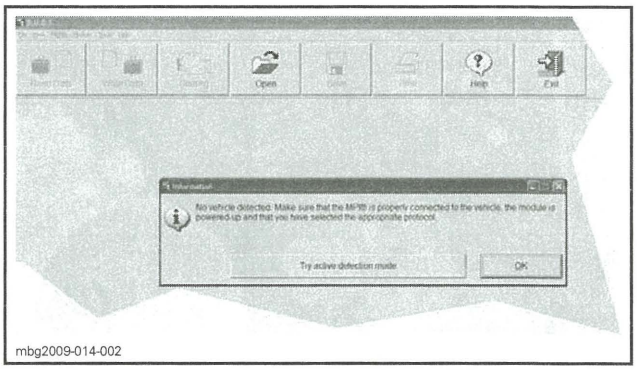

mbg2009-014-002

Three modules (2 for GTS) should appear as connected in B.U.D.S.

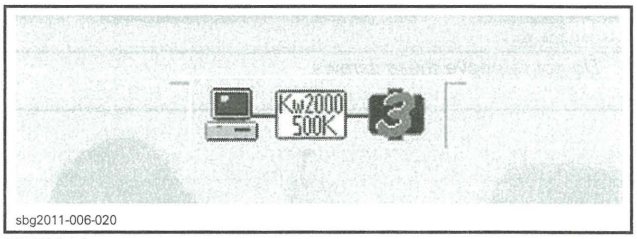

sbg2011-006-020

TYPICAL

8. Click on **Read Data**.

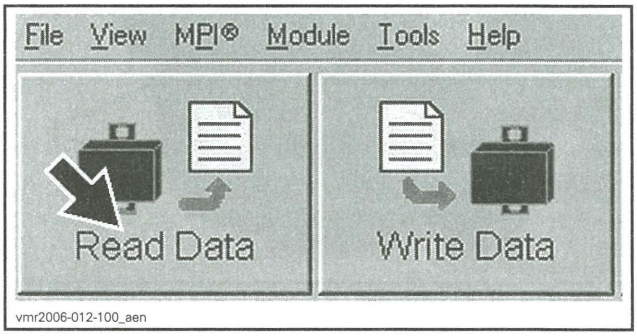

vmr2006-012-100_aen

9. When the following message appears, click **Yes** to start the updates.

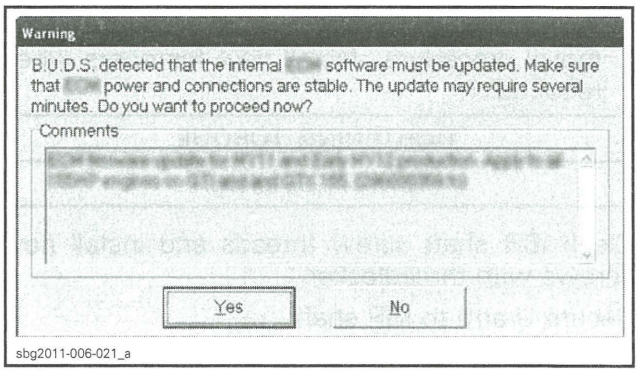

sbg2011-006-021_a

TYPICAL

NOTICE While the ECM is being updated, an hour glass might appear on the computer. The computer screen and vehicle cluster might also go blank. DO NOT TOUCH ANYTHING until the following message appears. Then, click the "OK" button.

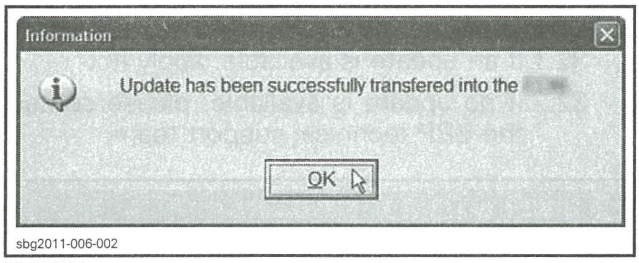

TYPICAL

10. When the following message appears. Click **Yes**.

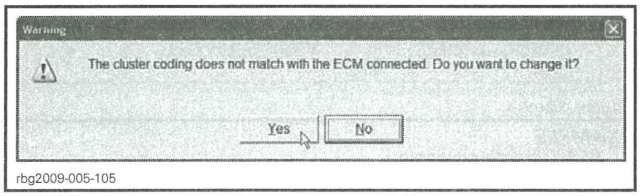

11. Repeat the same update steps for the remaining modules to reflash.

NOTE: When updating the iBR, it is normal to hear a beep from the watercraft.

12. After the upgrade of all modules, ensure to clear all occurred faults with B.U.D.S.

    12.1 Click on the **Faults** tab.

    12.2 Click the "Clear Occurred Faults" button.

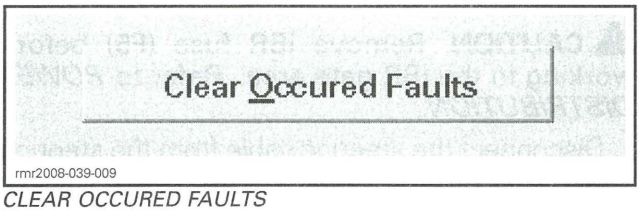

CLEAR OCCURED FAULTS

13. Exit B.U.D.S.
14. Remove tether cord and wait until cluster shuts down.
15. Push the START button briefly.
16. Install tether cord on engine cut-off switch.
17. Restart B.U.D.S. and click on **Read Data** button.
18. Check if the updates have been successfully reflashed as follows.
19. Select the **Module** drop down list and select **ECM** then **Information**.

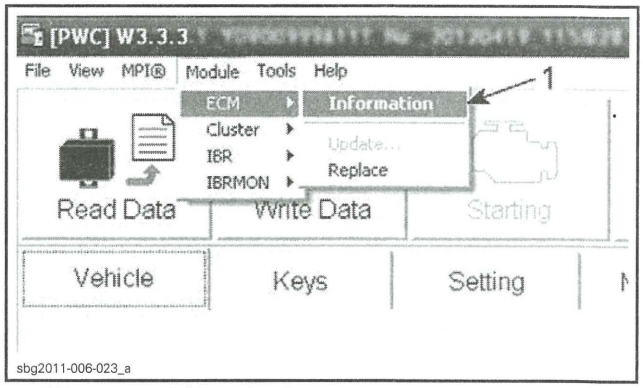

1. ECM module information

20. Look at the "BRP Assembly Number".

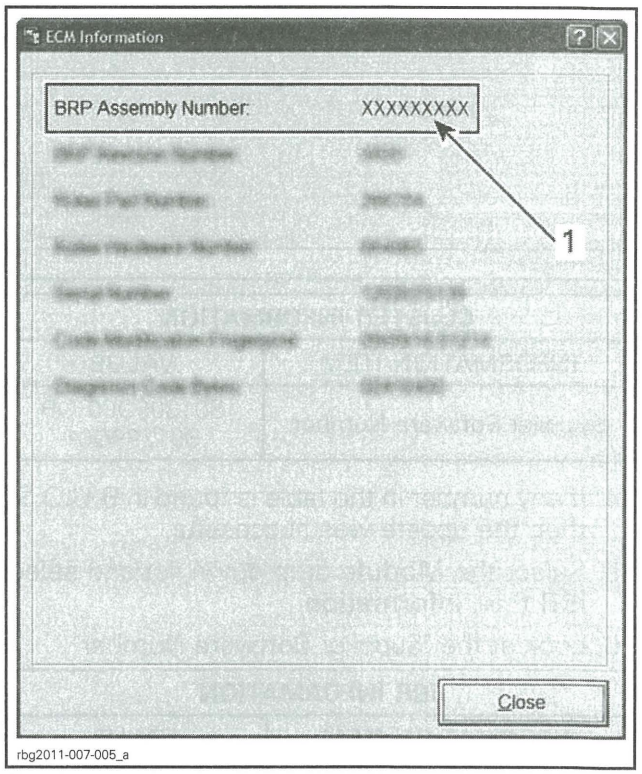

TYPICAL
1. BRP Assembly number

ECM INFORMATION
BRP ASSEMBLY NUMBER
420666362 OR 420666364 OR 420666373 OR 420666378

21. If any number in the table is found in B.U.D.S., then the update was successful.
22. Select the **Module** drop down list and select **Cluster** then **Information**.
23. Look at the "Supplier Software Number".

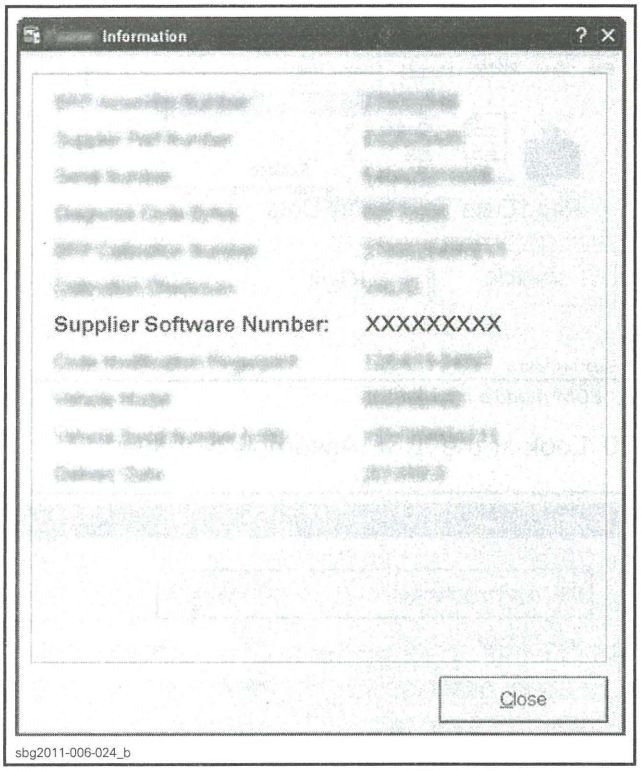

sbg2011-006-024_b

CLUSTER INFORMATION	
INFORMATION ITEM	VALUE
Supplier Software Number	S01300D00 OR S01299D01

24. If any number in the table is found in B.U.D.S., then the update was successful.
25. Select the **Module** drop down list and select **iBR** then **Information**.
26. Look at the "Supplier Software Number".

iBR INFORMATION	
INFORMATION ITEM	VALUE
Supplier Software Number	S01315A07

27. If the number in the table is found in B.U.D.S., then the update was successful.
28. Select the **Module** drop down list and select **iBRMON** then **Information**.

NOTE: Both the iBR and the iBRMON must be reflashed during the same update session otherwise the iBR will not operate at all.

29. Look at the "Supplier Software Number".

iBRMON INFORMATION	
INFORMATION ITEM	VALUE
Supplier Software Number	S01317A02

30. If the number in the table is found in B.U.D.S., then the update was successful.
31. If the update was not successful for any module, check for each non-reflashed module if an update is available in B.U.D.S.
32. For example, select the **Module** drop down list and select **ECM** then **Update**.
    32.1 If an update is available, apply it.
    32.2 If no update is available, please contact the BRP technical support team.

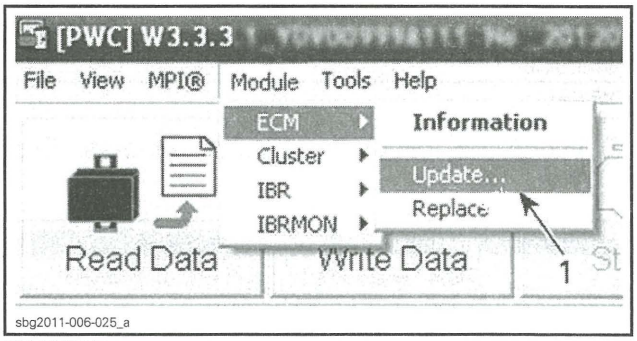

sbg2011-006-025_a

EXAMPLE
1. ECM update available

iBR GATE

iBR Gate Removal (with VTS Trim Ring and Steering Nozzle)

Move the iBR gate to the forward position (full up) using the *iBR OVERRIDE* function. Refer to *SYSTEM DESCRIPTION (iBR)* in this subsection.

NOTICE **Do not try to manually force the iBR gate when all components are installed.**

⚠ CAUTION **Remove iBR fuse (F5) before working in the iBR gate area. Refer to *POWER DISTRIBUTION*.**

1. Disconnect the steering cable from the steering nozzle arm.

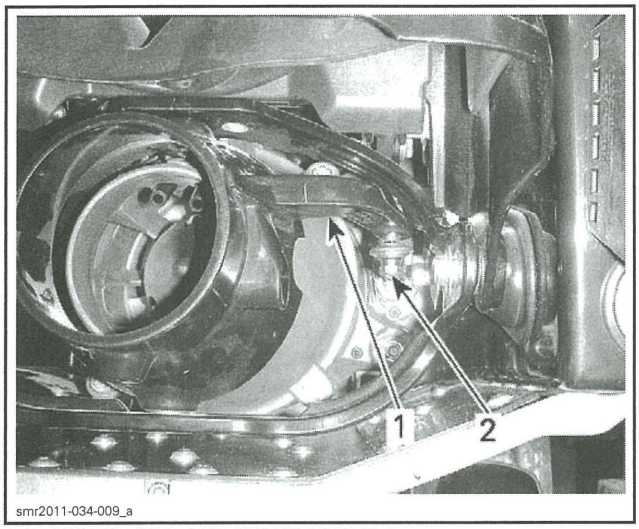

GTI SERIES, GTR AND WAKE MODELS
1. *Nozzle arm*
2. *Remove screw*

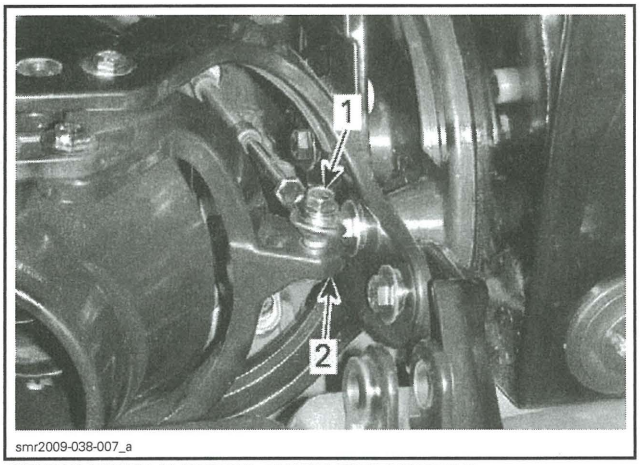

GTX/ RXT/RXP-X SERIES, WAKE PRO MODELS
1. *Remove screw*
2. *Nozzle lever*

2. Remove and discard screws retaining U-arm to iBR actuator shaft.

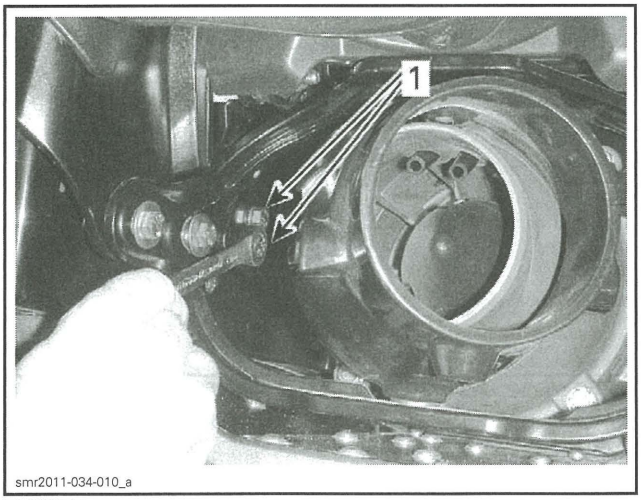

TYPICAL
1. *Remove and discard screws*

⚠ CAUTION From now on, retain iBR gate to prevent it to fall. Pay attention not to catch your fingers.

3. Raise iBR gate to its upper position. Hold in position.
4. Remove and discard screw and keep bushing from iBR gate LH pivot point.

NOTE: Pull out bushing along with the screw.

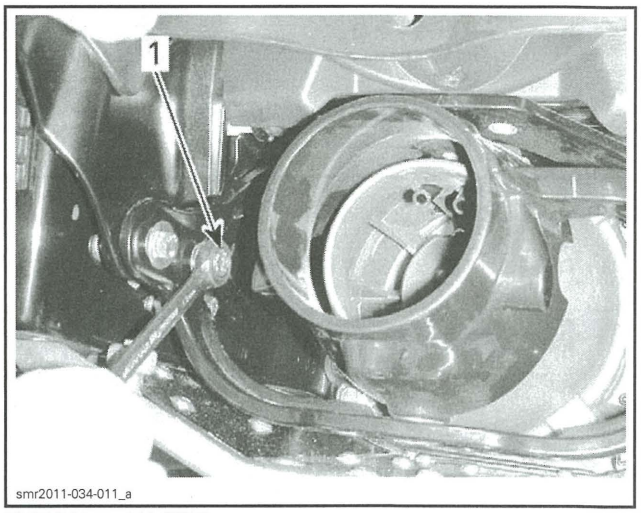

TYPICAL — LH SIDE
1. *Remove and discard screw, keep bushing*

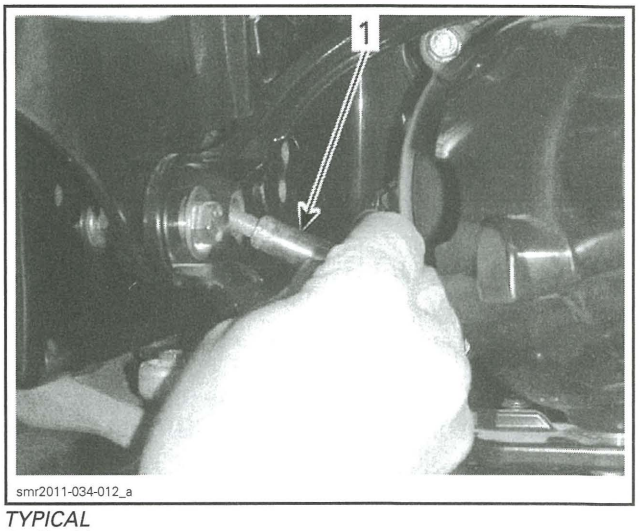

TYPICAL
1. *Bushing*

5. Remove and discard screw and keep bushing from iBR gate RH pivot point.
6. Remove and discard screw and keep bushing from U-arm pivot point.

NOTE: Pull out bushing along with the screw.

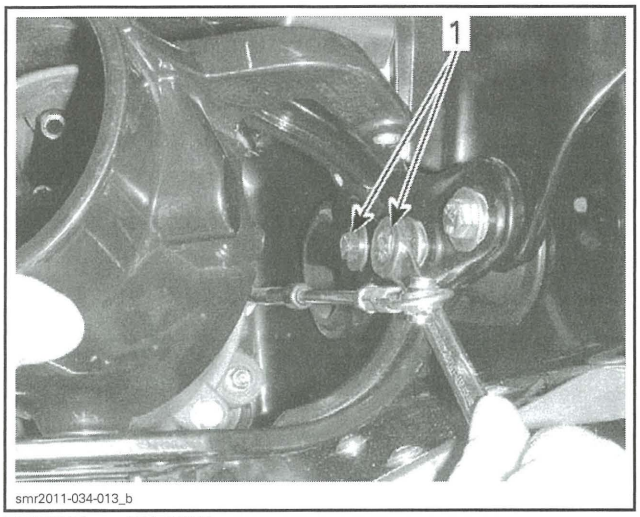

TYPICAL — RH SIDE
1. *Remove and discard screws, keep bushings*

Pull out iBR gate ass'y with U-arm.

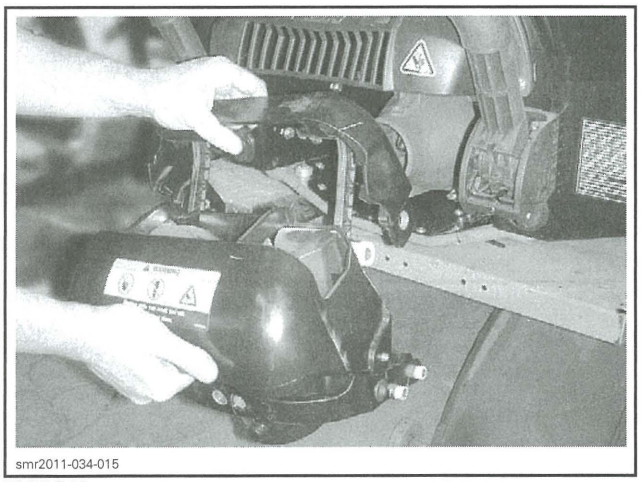

TYPICAL

iBR Gate and VTS Trim Ring Disassembly

VTS Trim Ring Removal

Remove and discard the two hexagonal screws and keep bushings securing the iBR gate to the VTS trim ring.

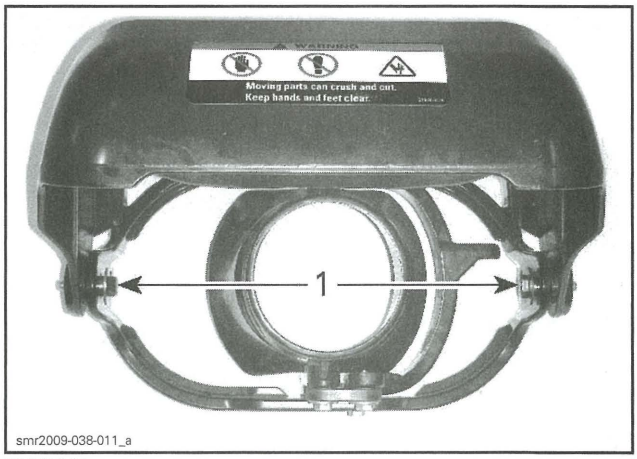

TYPICAL
1. *iBR gate retaining hexagonal screws to remove*

Trim Ring Inspection

1. Inspect trim ring and metal spacers for cracks, oblong holes, evidence of wear and deformation.
2. Inspect plastic bushings and friction sleeves for cracks, deformation and signs of wear.

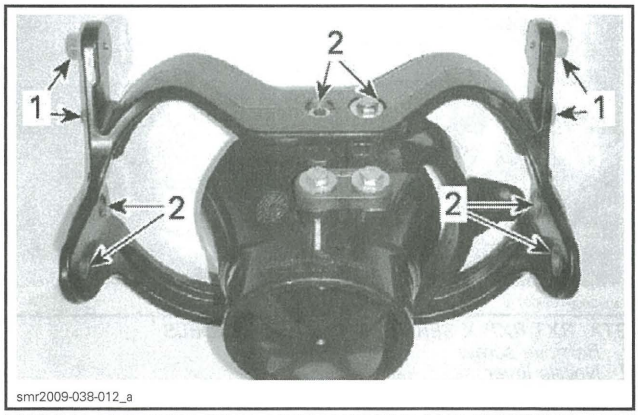

TYPICAL VTS TRIM RING (WITH NOZZLE AND STEERING ARM)
1. *Friction sleeves (2 each side)*
2. *Plastic bushings (x8)*

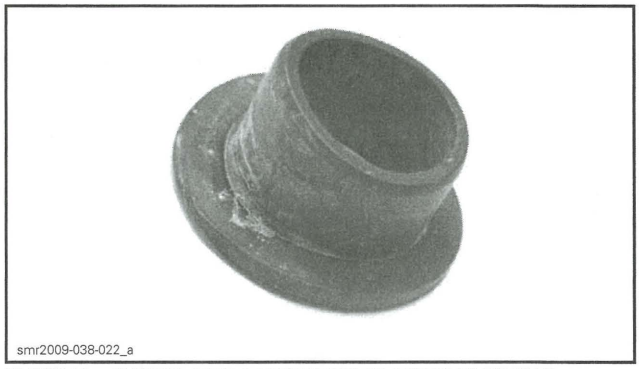

TYPICAL - WORN AND DEFORMED PLASTIC BUSHING

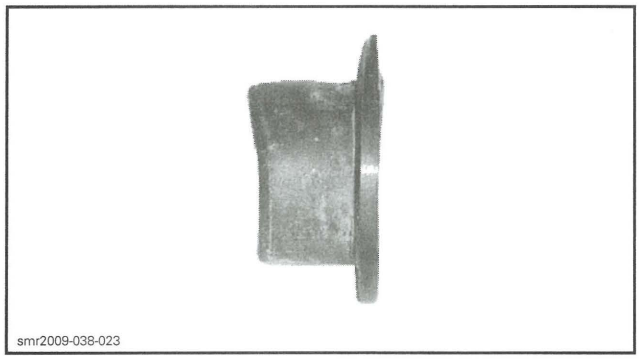
smr2009-038-023

NOTE: Friction sleeves should be replaced as specified in maintenance chart or if they show signs of wear (flat surfaces). Plastic bushings are press fit and should be replaced if they show signs of wear, deformation, or if the iBR gate backlash is beyond service limit.

3. Inspect gate stoppers for signs of wear.

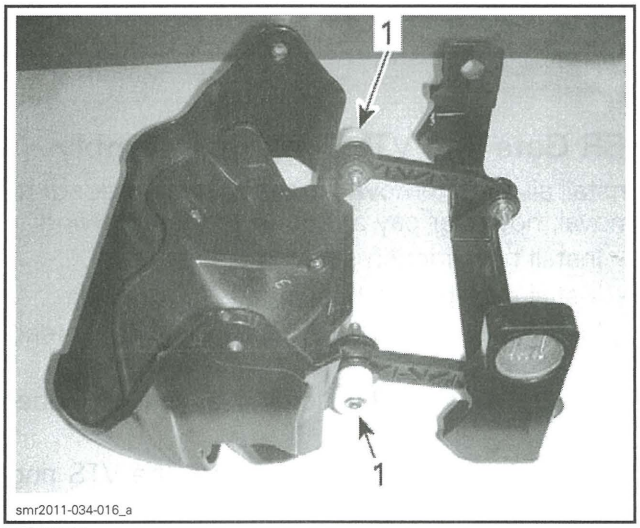

smr2011-034-016_a

TYPICAL
1. Stoppers

4. Replace parts as required.

Steering Nozzle Removal

GTI Series, GTR and Wake Models

1. Remove screws securing nozzle to VTS ring.

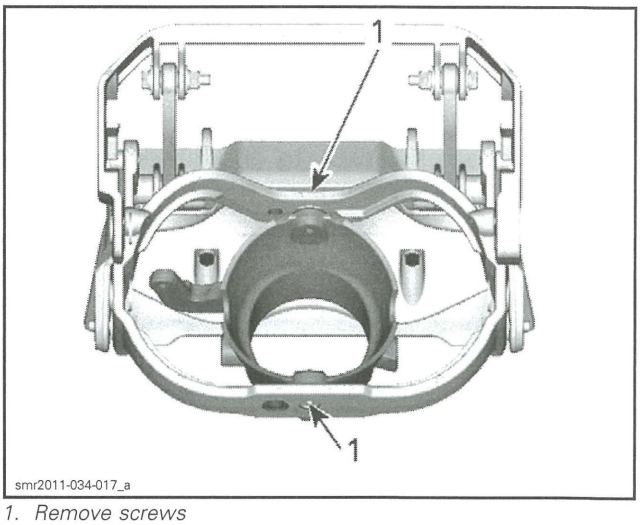

smr2011-034-017_a

1. Remove screws

GTX/RXT/RXP-X Series and Wake Pro Models

1. Remove the 2 hexagonal screws securing the steering arms (links) to the steering nozzle (top and bottom).

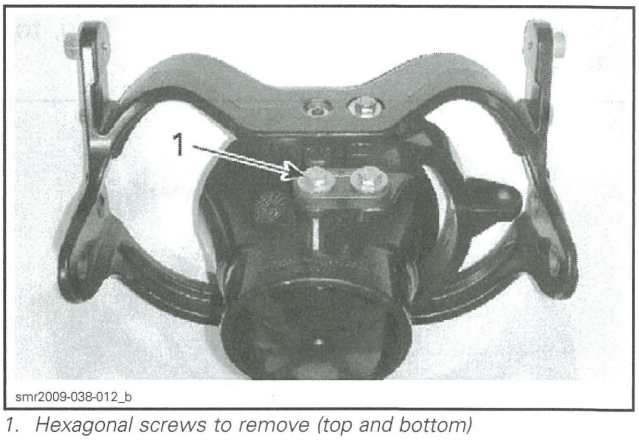

smr2009-038-012_b

1. Hexagonal screws to remove (top and bottom)

2. Remove the 2 socket head screws securing the nozzle to the VTS trim ring (1 top and 1 bottom).

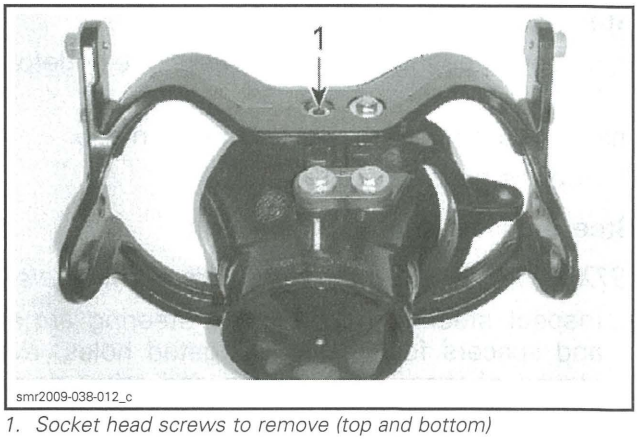

smr2009-038-012_c

1. Socket head screws to remove (top and bottom)

Steering Nozzle Lever Removal

GTX/RXT/RXP-X Series and Wake Pro Models

1. Remove the hexagonal screws securing the steering arms (links) to the steering nozzle lever, top and bottom.

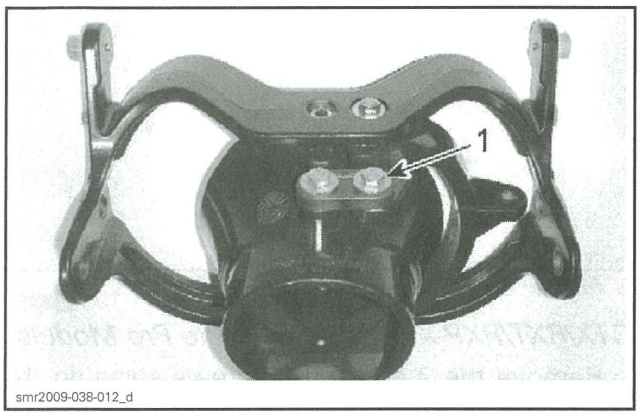

1. Hexagonal screws to remove (top and bottom)

2. Remove the hexagonal screws securing the steering nozzle lever to the VTS trim ring, top and bottom.

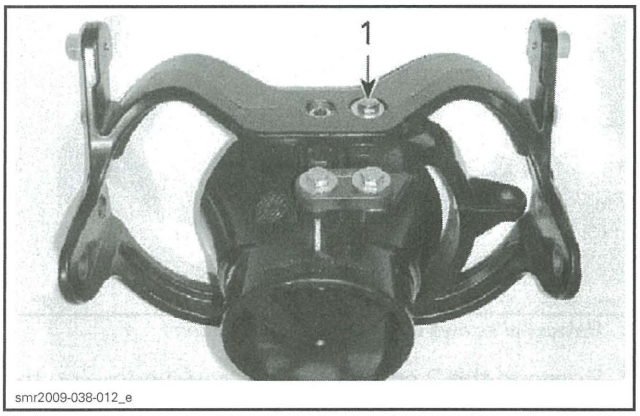

1. Hexagonal screws to remove (top and bottom)

Steering Nozzle Inspection

1. Inspect steering nozzle for cracks, wear, deformation, and other damages.

Inspect bushings for wear or other damage.

2. Replace parts as required.

Steering Nozzle Lever Inspection

GTX/RXT/RXP-X Series and Wake Pro Models

1. Inspect steering nozzle lever, steering arms, and spacers for cracks, elongated holes, evidence of wear, deformation and other damages.
2. Replace as required.

iBR Gate Inspection

1. Inspect the iBR gate and its plastic liner for cracks, out of round holes, evidence of wear, deformation and other damages.
2. Inspect plastic bushings (x4) for cracks, wear, and deformation.
3. Replace as required.

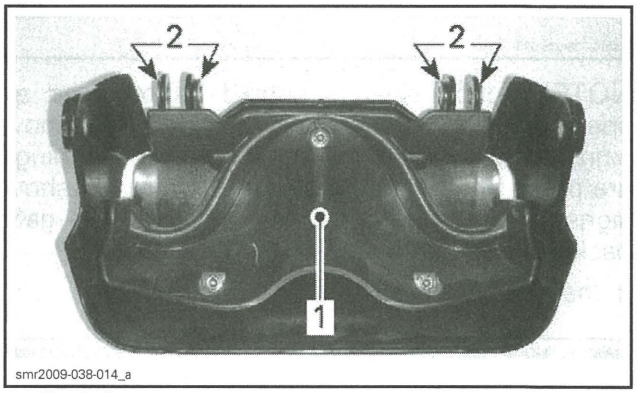

1. Plastic liner
2. Plastic bushings

iBR Gate and VTS Ring Reassembly

Install all parts removed in the reverse order of removal, however pay attention to the following:

- Install new friction sleeves (as required).
- Install new plastic bushings (as required).
- Install new hexagonal screws with threadlocker.
- Torque all retaining screws as per exploded view.

When installing the iBR gate onto the VTS ring, position the VTS ring so that the small end of the steering nozzle is facing you with the steering lever towards the RH side.

Position the iBR gate over the ring so that the warning label is facing you (right side up) and install the mounting hardware as seen in the exploded view. The attachment points for the linkage arms will be facing away from you (not visible in following illustration of iBR gate and VTS ring assembly).

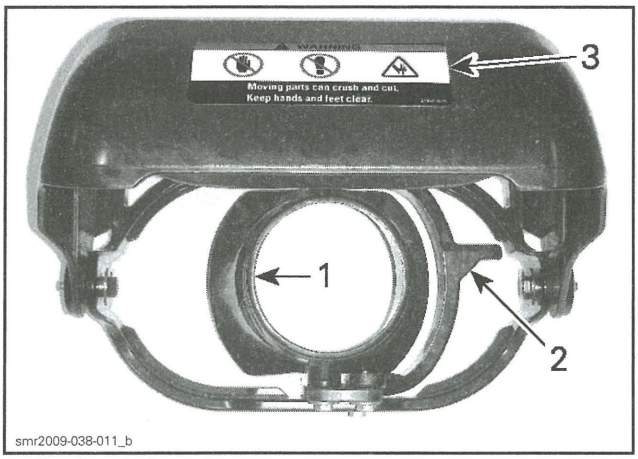

1. *Small end of nozzle*
2. *Steering lever*
3. *Warning label*

iBR Gate Installation (with VTS Trim Ring and Steering Nozzle)

Installation is the reverse of the removal procedure however, pay attention to the following.

Ensure all flanged bushings are in place.

Position iBR gate down and components as shown to install into position.

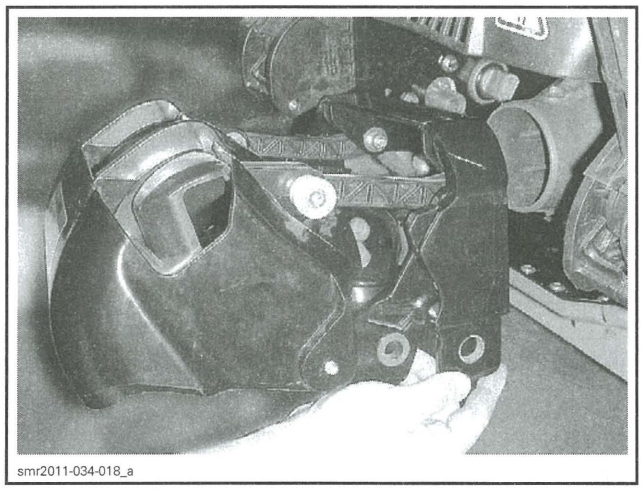

Insert iBR gate ass'y between mounting plates.

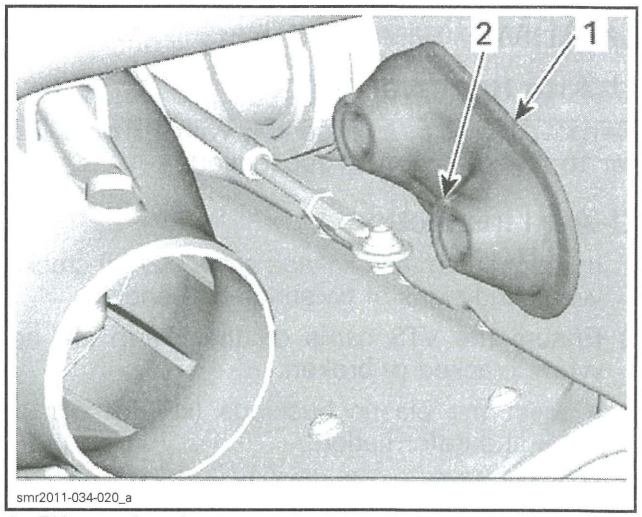

1. *RH mounting plate*
2. *Rib here*

NOTE: Ensure RH mounting plate is in place before inserting iBR gate ass'y. Also position its ribs as illustrated.

Raise iBR gate to its upper position. Hold in position.

Use new screws with threadlocker for installation.

Loosely install M8 x 70 mm screws on RH side.

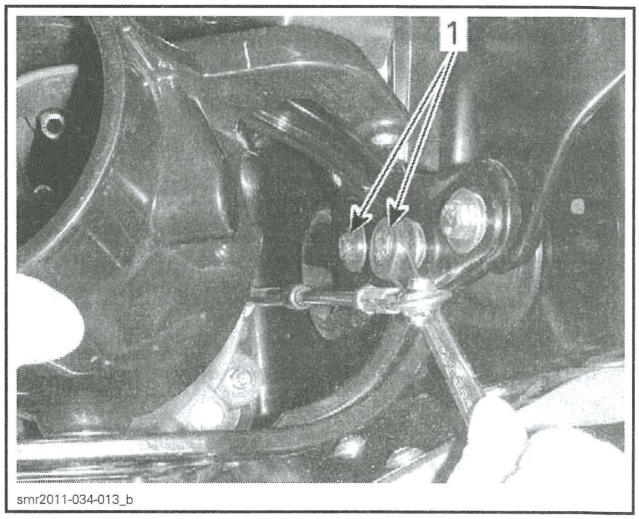

1. *M8 x 70 screws here*

Install screw on LH side of VTS ring pivot point then iBR shaft screws.

Torque all retaining screws as specified in exploded view.

NOTICE Over torquing will damage inserts.

U-ARM

U-Arm Removal

Remove U-arm as an assembly with iBR gate. Refer to *iBR GATE* in this subsection.

U-Arm Inspection

1. Inspect U-arm and linkage arms (x2) for cracks, wear, and signs of twisting and bending.
2. Ensure the VTS cams on the U-arm are not worn, cracked or broken.
3. Inspect the plastic bushings (x5) for cracks, wear and deformation.
4. Replace parts as required.

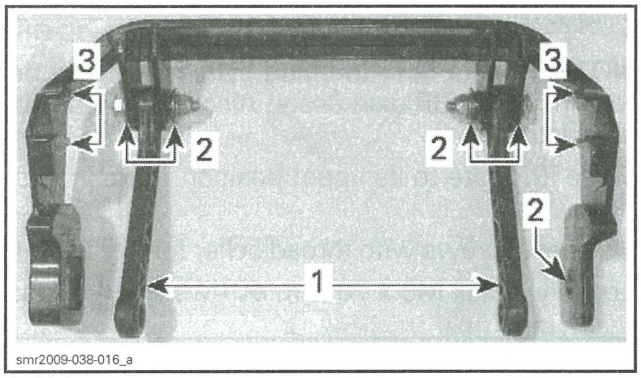

1. *Linkage arms*
2. *Plastic bushings (x5)*
3. *VTS cams*

U-Arm Installation

Installation is the reverse of the removal procedure however, pay attention to the following:

- Install new plastic bushings (as required).
- Install all new hexagonal screws with threadlocker.
- Torque all retaining screws as per exploded view.

iBR GATE SUPPORT PLATES

iBR Gate Support Plate Removal

NOTE: Support plates have been factory aligned with precision to ensure proper iBR mechanism alignment. It is not recommended to remove the support plates except for 2 specific reasons: Damage to the support plate or Realignment required. In both cases refer to *iBR MECHANISM ALIGNMENT VERIFICATION.*

RH Support Plate Removal

1. Remove iBR gate ass'y. Refer to procedure in this subsection.
2. Remove exterior support plate (unsnap).

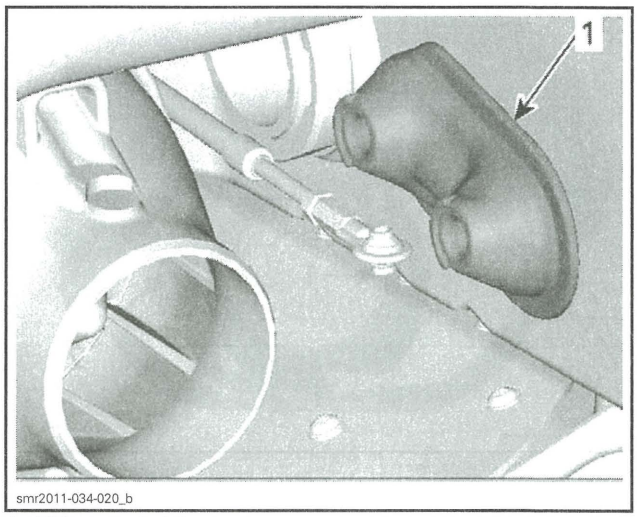

1. *RH support plate*

3. Remove plastic nut.
4. Remove internal support plate.
5. Check condition of support plate gasket. Replace if necessary.

LH Support Plate Removal

1. Remove iBR actuator from support plate. Refer to procedure in this subsection.
2. Remove and discard support plate mounting screws.

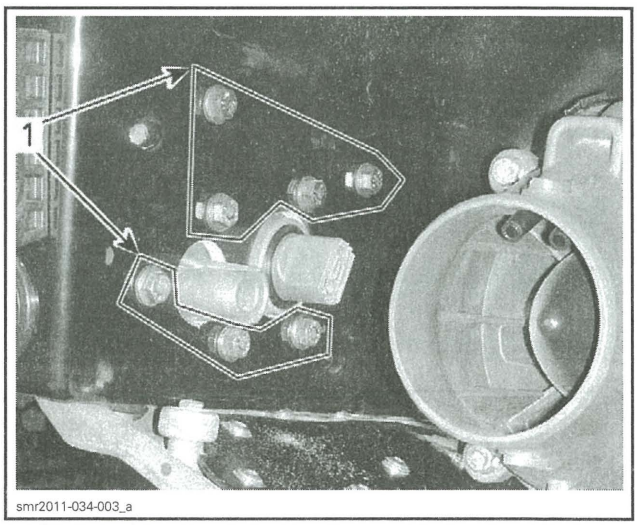

1. *Support plate mounting screws*

3. Pull out support plate.
4. Check condition of support plate gasket. Replace if necessary.

iBR Support Plate Installation

RH Support Plate Installation

1. Install inner plate, gasket and outer RH support plate and snap them together.

2. Finger tighten plastic nut

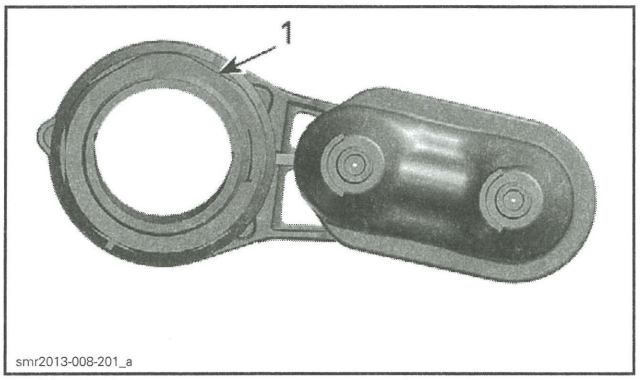

1. Plastic nut

3. Push the assembly towards the top of the through-hull holes as much as possible.

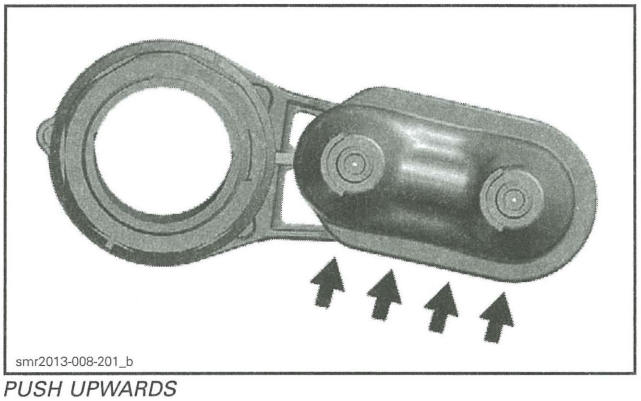

PUSH UPWARDS

TIGHTENING TORQUE	
Plastic nut	28 N•m (21 lbf•ft)

NOTE: It is normal that the assembly might slightly move downwards when tightening the plastic nut. Ensure to prevent larger undesired movement.

4. Ensure formed seal is in good condition and properly installed onto support plate.
5. Verify alignment. Refer to *iBR MECHANISM ALIGNMENT VERIFICATION* in this subsection.
6. Check watercraft in water for water tightness.

LH Support Plate Installation

Installation is the reverse of the removal procedure however, pay attention to the following: To avoid iBR position fault code, strictly follow this installation sequence:

1. Install iBR actuator on the support plate.
2. Install gate assembly, except for the 2 bolts securing the iBR actuator shaft to U-arm.
3. Loosely install all actuator mounting screws.
4. Lower reverse gate until it bottoms against stoppers.
5. Tighten the two lower screws shown.

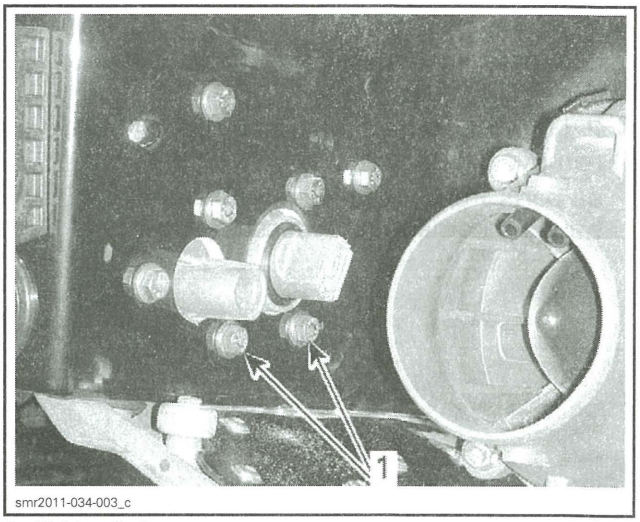

1. Tighten first

6. Raise reverse gate.
7. Tighten remaining screws.
8. Finally, torque actuator mounting screws to specification as per following sequence.

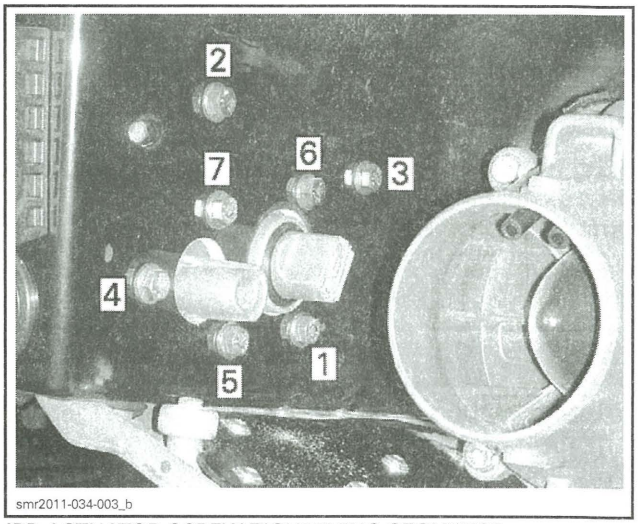

iBR ACTUATOR SCREW TIGHTENING SEQUENCE

9. Install screws to secure support plate to iBR actuator and torque as per exploded view.
10. Ensure formed seal is in good condition and properly installed onto support plate.
11. Verify alignment. Refer to *iBR MECHANISM ALIGNMENT VERIFICATION* in this subsection.
12. Check watercraft in water for water tightness.

iBR Mechanism Alignment Verification

NOTE: Before proceeding with the alignment verification, make sure that:

- iBR actuator is installed.Refer to *iBR ACTUATOR INSTALLATION*.
- iBR gate assembly is installed. Refer to *iBR GATE INSTALLATION*.
- 2 bolts that attach U-arm to iBR actuator are removed.
- all parts from the iBR, and iBR gate assembly-have no damage or excessive wear.

STEP	NORMAL SITUATION	VERIFICATION	IF VERIFICATION FAILS
1	When stroking the mechanism downwards, the trim ring bottoms against the pump (VTS down). Then the trim ring is locked and only the U-arm and reverse gate rotate.	Raise the reverse gate completely. Rotate the reverse gate down slowly and check the trim ring's stroke. It should complete its stroke with no resistance.	Check if the pump and venturi are properly tightened or if they are damaged. Inspect parts for damage or excessive wear.
2	The reverse gate must be able to rotate completely down under its own weight.	Raise the reverse gate completely and let it rotate under its own weight. It should rotate all the way down.	Check the mechanism's alignment with STEPS 3 and 4.
3	The steering nozzle must turn freely at all times, even when trim ring bottoms against the pump (VTS down).	Turn by hand the steering nozzle both sides various times during the rotation of the mechanism. It should turn freely at any angle.	Inspect parts for damage or excessive wear. If it is still not free, move both fixing plates slightly towards the top and rear of PWC.
4	When stroking the mechanism downwards, the trim ring's friction sleeves should not prevent the U-arm from completing its rotation.	Raise the reverse gate completely. Rotate the reverse gate down slowly and check the U-arm's stroke. It should complete its rotation.	There is a misalignment issue, use a feeler gauge to determine which sleeve is preventing movement, then proceed with STEPS 4a to 4d. accordingly.
4a	The bottom of the LH friction sleeves must not prevent rotation by contacting the U-arm.	Raise the reverse gate completely. Rotate the reverse gate down slowly and check if there is a contact between the LH friction sleeves and the U-arm that prevents rotation.	Refer to *LH PLATE REMOVAL* and *LH PLATE INSTALLATION*. Raise the LH plate's rear pivot. Lower the LH plate's front pivot. 
4b	The top of the LH friction sleeves must not prevent rotation by contacting the U-arm.		Refer to *LH PLATE REMOVAL* and *LH PLATE INSTALLATION*. Lower the LH plate's rear pivot. Raise the LH plate's front pivot. 
4c	The bottom of the RH friction sleeves must not prevent rotation by contacting the U-arm.	Raise the reverse gate completely. Rotate the reverse gate down slowly and check if there is a contact between the RH friction sleeves and the U-arm that prevents rotation.	Refer to *RH PLATE REMOVAL* and *RH PLATE INSTALLATION*. Raise the RH plate's rear pivot. Lower the RH plate's front pivot. 
4d	The top of the RH friction sleeves must not prevent rotation by contacting the U-arm.		Refer to *RH PLATE REMOVAL* and *RH PLATE INSTALLATION*. Lower the RH plate's rear pivot. Raise the RH plate's front pivot. 

VTS CONTROL BUTTON

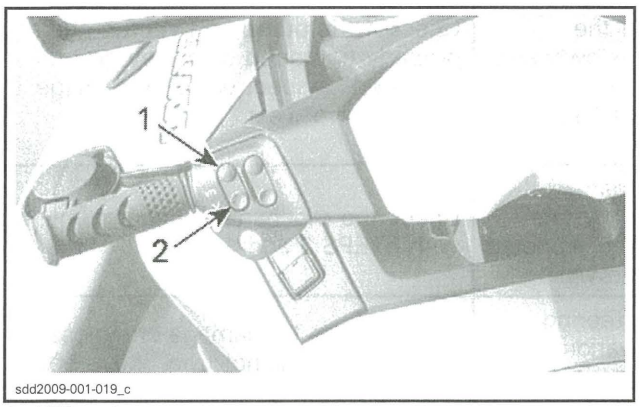

1. VTS up button
2. VTS down button

VTS Button Overview

The VTS button contain a series of 4 diodes for the UP and DOWN arrow switches. Refer to *WIRING DIAGRAM*.

The center wire to the switches (pin "C"), is common for iS button and VTS button (somewhat like a ground wire). The other two wires (pins "A" and "B"), act as signal wires to the gauge for each set of switches. They actually each form one branch of an electronic circuit within the gauge.

Each diode (in circuit) drops a nominal 0.6 Vdc when conducting electricity. If the circuit current passes through all four diodes (say VTS switch open), a drop of 2.4 Vdc would be measured across the 4 diodes (pin "A" to pin "C"). This drop of 2.4 Vdc measured at pin "A" tells the gauge the VTS switch is open.

If the VTS UP button is pressed, 2 diodes are bypassed by the closed switch. The remaining two diodes in the circuit drop 1.2 Vdc (at pin "A").

If the VTS DOWN button is pressed, 1 diode is bypassed by the closed switch. The remaining three diodes in the circuit drop 1.8 Vdc (at pin "A").

The gauge senses these voltages through pin 13 of its connector, and interprets them as signals that tell it which switch is activated (VTS UP or VTS DOWN).

Since the command signal generated by the closure of a VTS switch concerns the VTS module, a circuit within the gauge will translate it to CAN protocol and transmit it through the CAN bus. The VTS module will react to the command, carry out the function, and transmit the result back through the CAN bus.

The gauge will use the signals from the switches and the transmitted information from the other modules, convert them to an indication, and cancel the command signal it sent out once the function has been carried out.

NOTE: The voltages stated above vary slightly depending on the actual voltage applied to the circuit and the current flow through the diodes. When using a Fluke 115 multimeter for testing in diode test mode, the voltage and current applied by the multimeter are lower than in circuit. The quality of probe contact, the actual probes and leads, and the precision of the meter calibration will all affect the results, which will most likely be slightly lower than nominal values stated.

VTS Control Button Functional Test Using iBR Override Function

1. Press the START/STOP button.
2. Install tether cord to power up the electrical system.

NOTE: Briefly press the START/STOP button to reactivate the electrical system when required.

3. Activate the iBR override function, refer to *SYSTEM DESCRIPTION (iBR)* in this subsection.
4. Press and hold the VTS DOWN arrow button. The iBR gate and steering nozzle will move downwards together until they reach the full VTS down position. The iBR gate will then continue moving to the full reverse/braking position alone.
5. Depress and hold the VTS UP arrow button and ensure the iBR gate moves up to the forward position.

NOTE: If the VTS button is released before full travel of the iBR gate, movement of the iBR gate will cease.

If the iBR does not respond to VTS button commands (UP or DOWN), carry out the following *VTS SWITCH TEST USING B.U.D.S.*

VTS Control Button Test Using B.U.D.S.

1. Connect watercraft to the latest B.U.D.S. software, refer to *COMMUNICATION TOOLS AND B.U.D.S.*
2. Click the **Read Data** button.
3. Check for an applicable fault code on the *FAULTS* page.
4. Click the **Monitoring** tab.
5. In the lower LH corner, click the **Cluster** tab.

6. On the LH handlebar, press the VTS UP and DOWN button alternately and look for the VTS UP and VTS Down indicator lights to come on in the **Cluster Lamp Active** area in B.U.D.S.

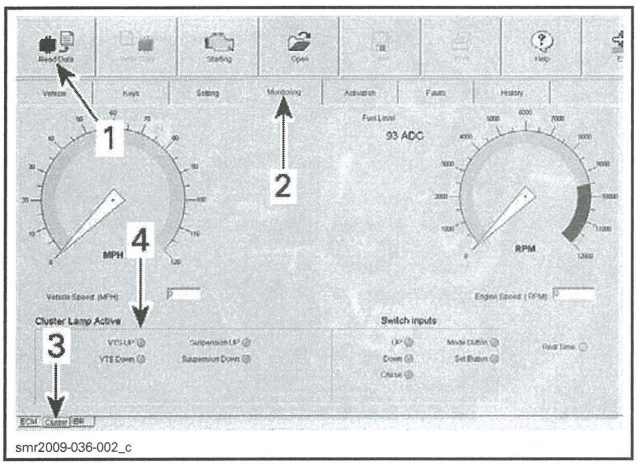

smr2009-036-002_c

TYPICAL
1. *Read Data button*
2. *Monitoring tab*
3. *Cluster tab*
4. *Cluster Lamp Active area*

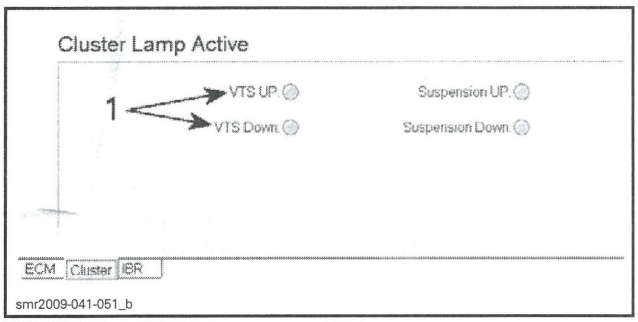

smr2009-041-051_b

TYPICAL
1. *VTS UP and VTS Down indicator lights*

If each of the gauge button indicator lights come on when the applicable switch is pressed, the VTS control button switches and wiring are good. The problem may be related to the information center or iBR module.

If one or all of the indicator lights do not come on, refer to *VTS CONTROL BUTTON TEST USING A MULTIMETER.*

VTS Control Button Test Using a Multimeter

1. Remove the gauge support cover, refer to *GAUGE* subsection.
2. Disconnect the gauge connector.

NOTICE **Pull connector lock out. Do not twist the screwdriver.**

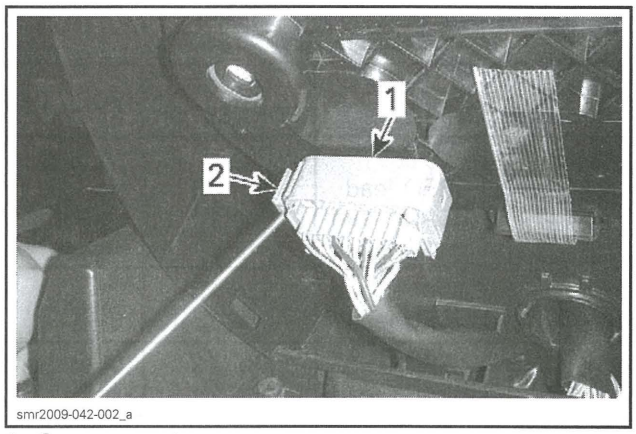

smr2009-042-002_a

1. *Gauge connector*
2. *Pull out to unlock connector*

3. Use a FLUKE 115 MULTIMETER (P/N 529 035 868) set to the diode test function. Test the VTS button switches as per following tables.

NOTE: It is important to set the multimeter to the diode check function when testing the VTS control switches.

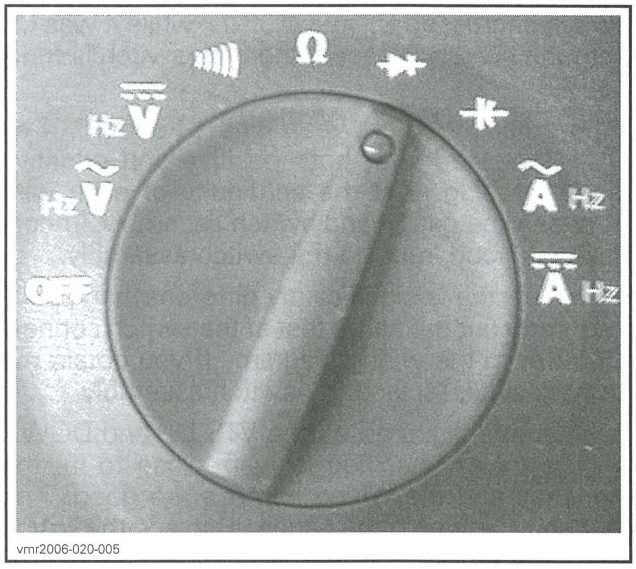

vmr2006-020-005

NOTE: Pay attention to multimeter lead position for diode biasing during test. Remember that each diode should drop approximately 0.6 Vdc when positively biassed, and read as an OL (open circuit) when negatively biassed (leads reversed).

BODY (GTS/GTI/GTR/WAKE)

SERVICE TOOLS

Description	Part Number	Page
SUPERTANIUM DRILL BIT 3/16"	529 031 800	200–201, 204

SERVICE PRODUCTS

Description	Part Number	Page
LOCTITE 243 (BLUE)	293 800 060	202
XPS SYNTHETIC GREASE	293 550 010	205–206

BODY PARTS NOMENCLATURE

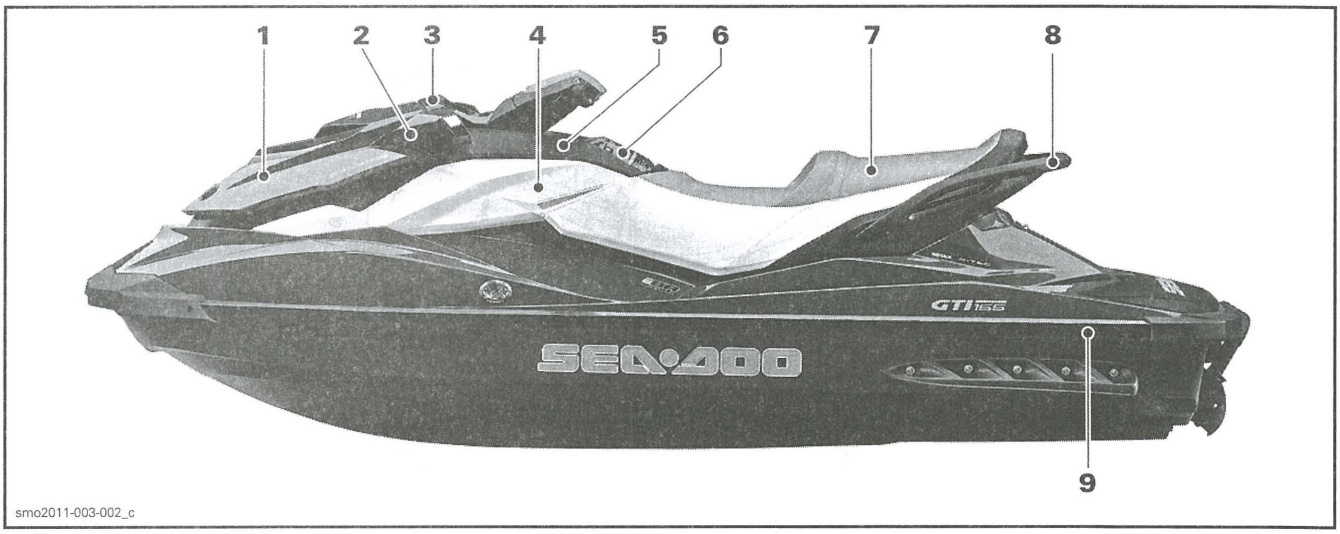

smo2011-003-002_c

1. *Storage compartment cover*
2. *Mirror support*
3. *Gauge trim*
4. *Lateral trim panel*
5. *Console*
6. *Glove box cover*
7. *Seat*
8. *Rear handle*
9. *Bumper*

STORAGE COMPARTMENT COVER

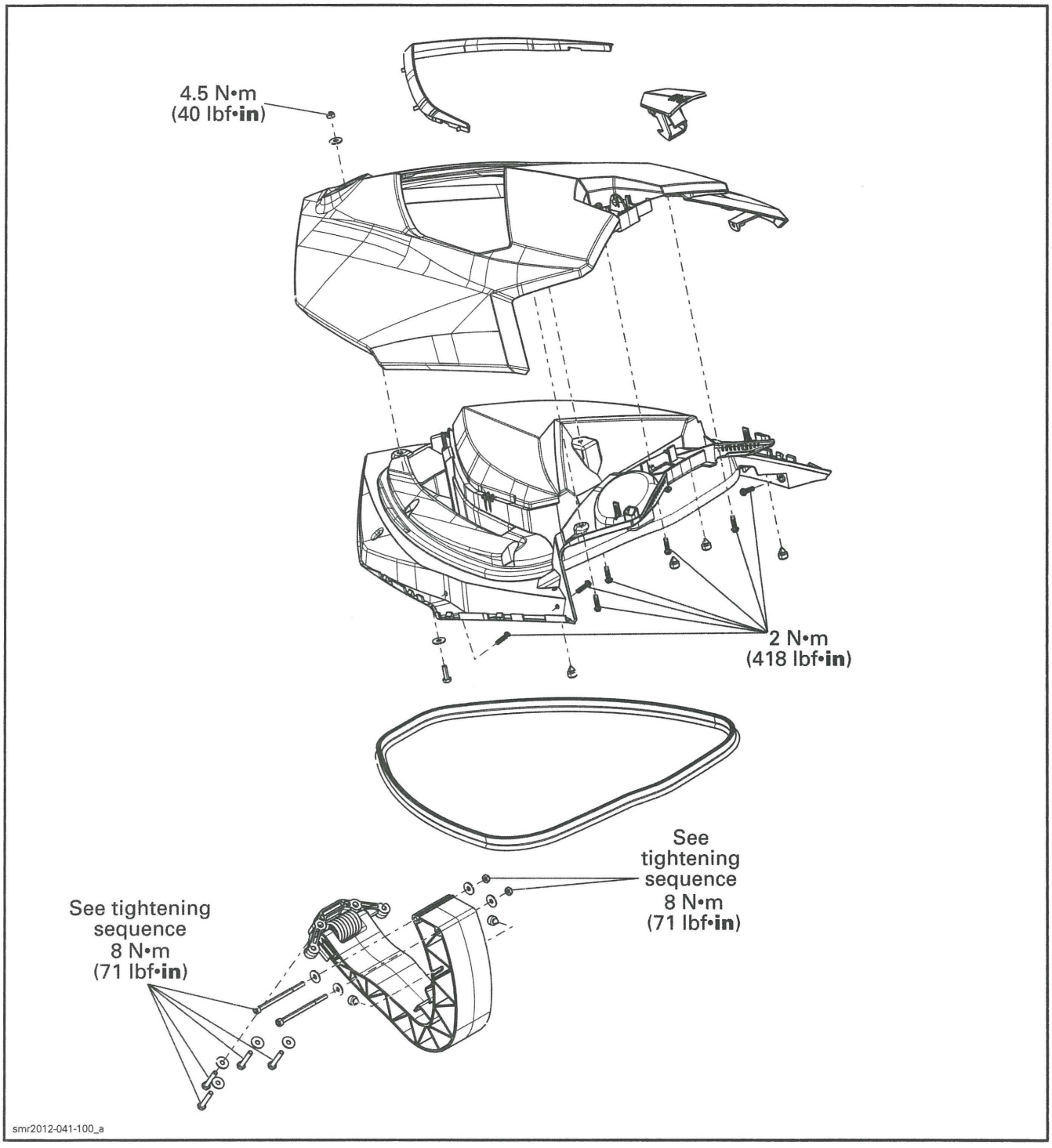

BODY PARTS

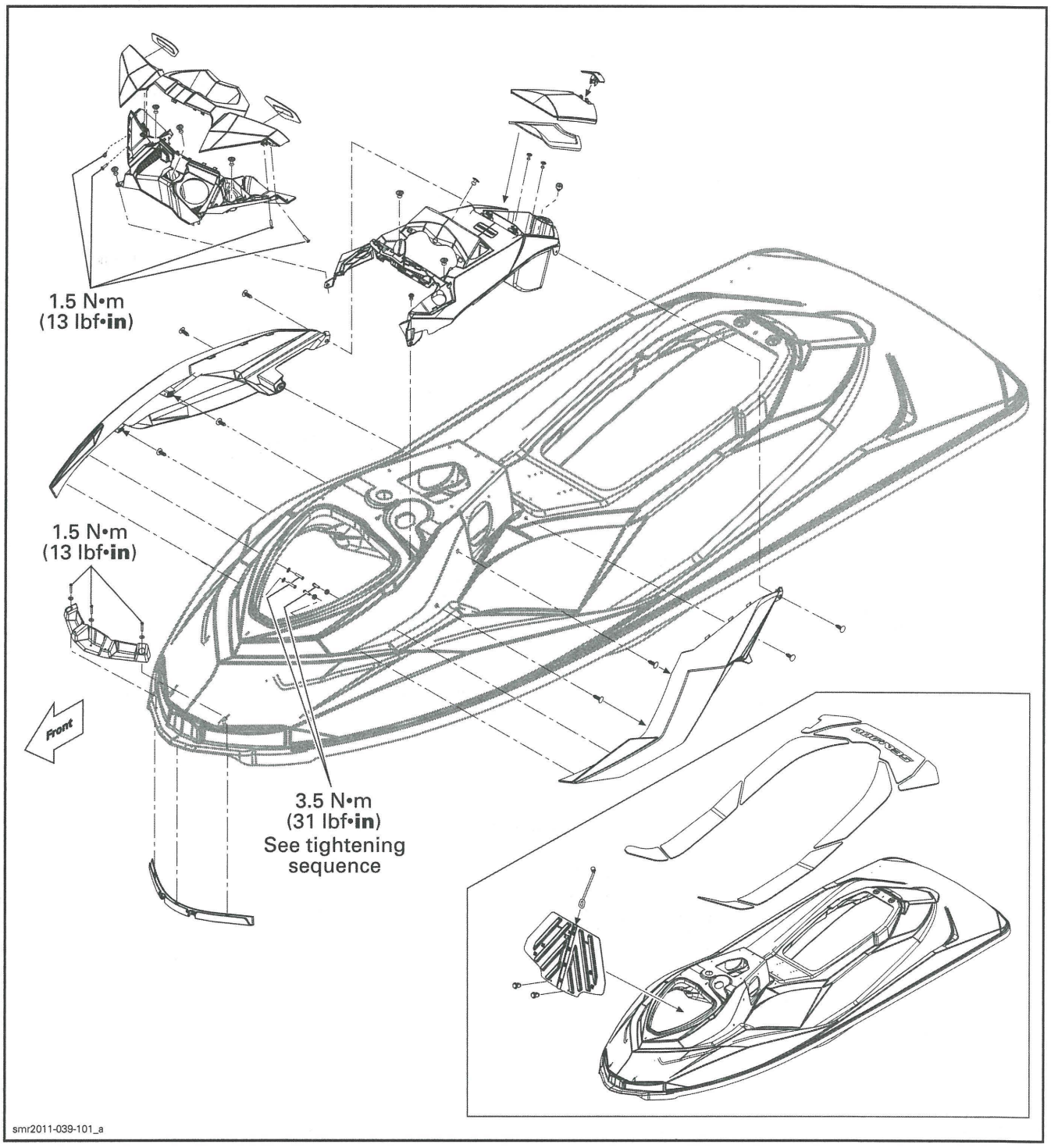
1.5 N•m
(13 lbf•in)
1.5 N•m
(13 lbf•in)
Front
3.5 N•m
(31 lbf•in)
See tightening
sequence
smr2011-039-101_a

BODY PARTS

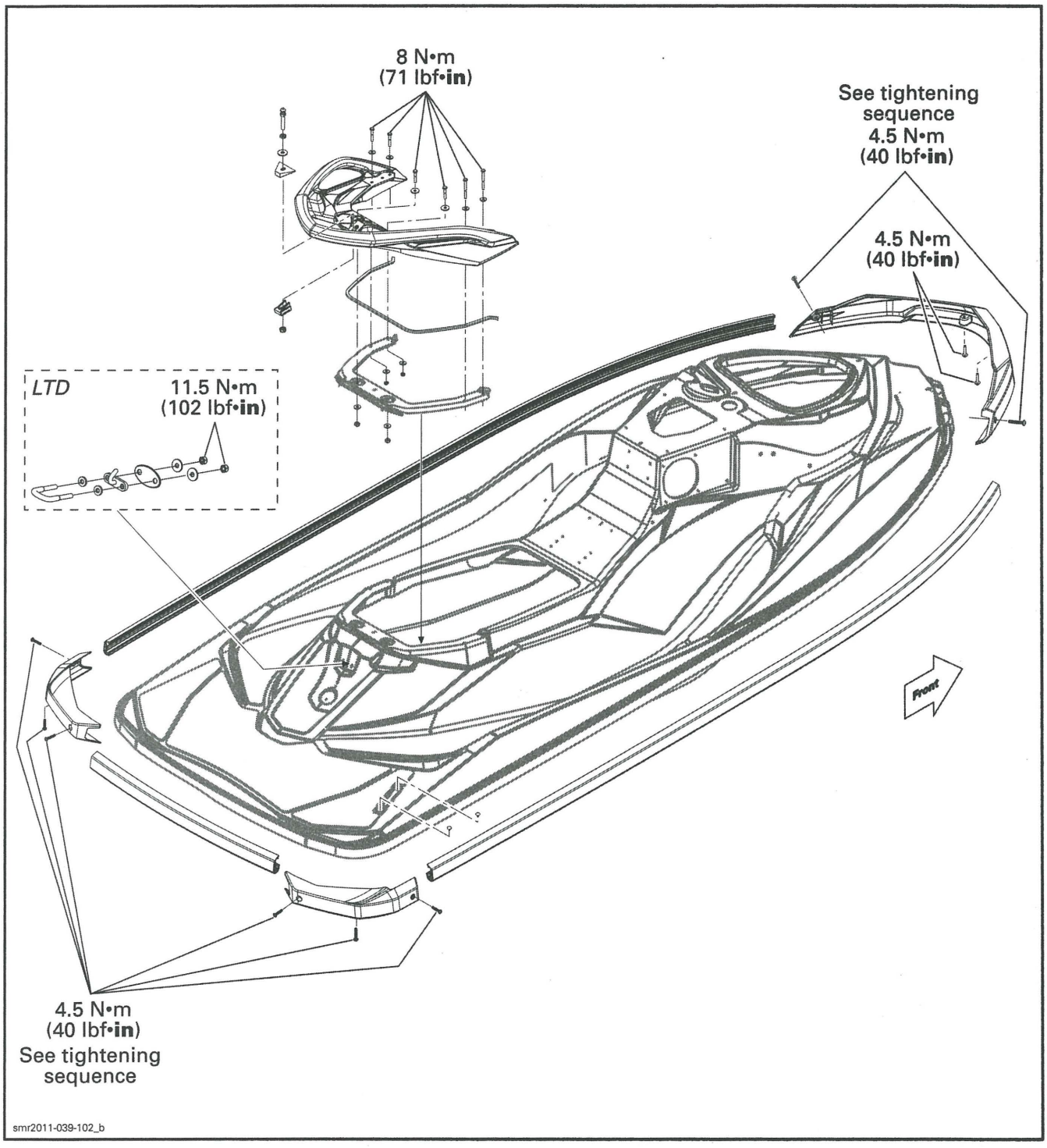
8 N•m
(71 lbf•in)
See tightening
sequence
4.5 N•m
(40 lbf•in)
4.5 N•m
(40 lbf•in)
LTD
11.5 N•m
(102 lbf•in)
Front
4.5 N•m
(40 lbf•in)
See tightening
sequence
smr2011-039-102_b

VENTILATION



smr2011-039-103

SEAT

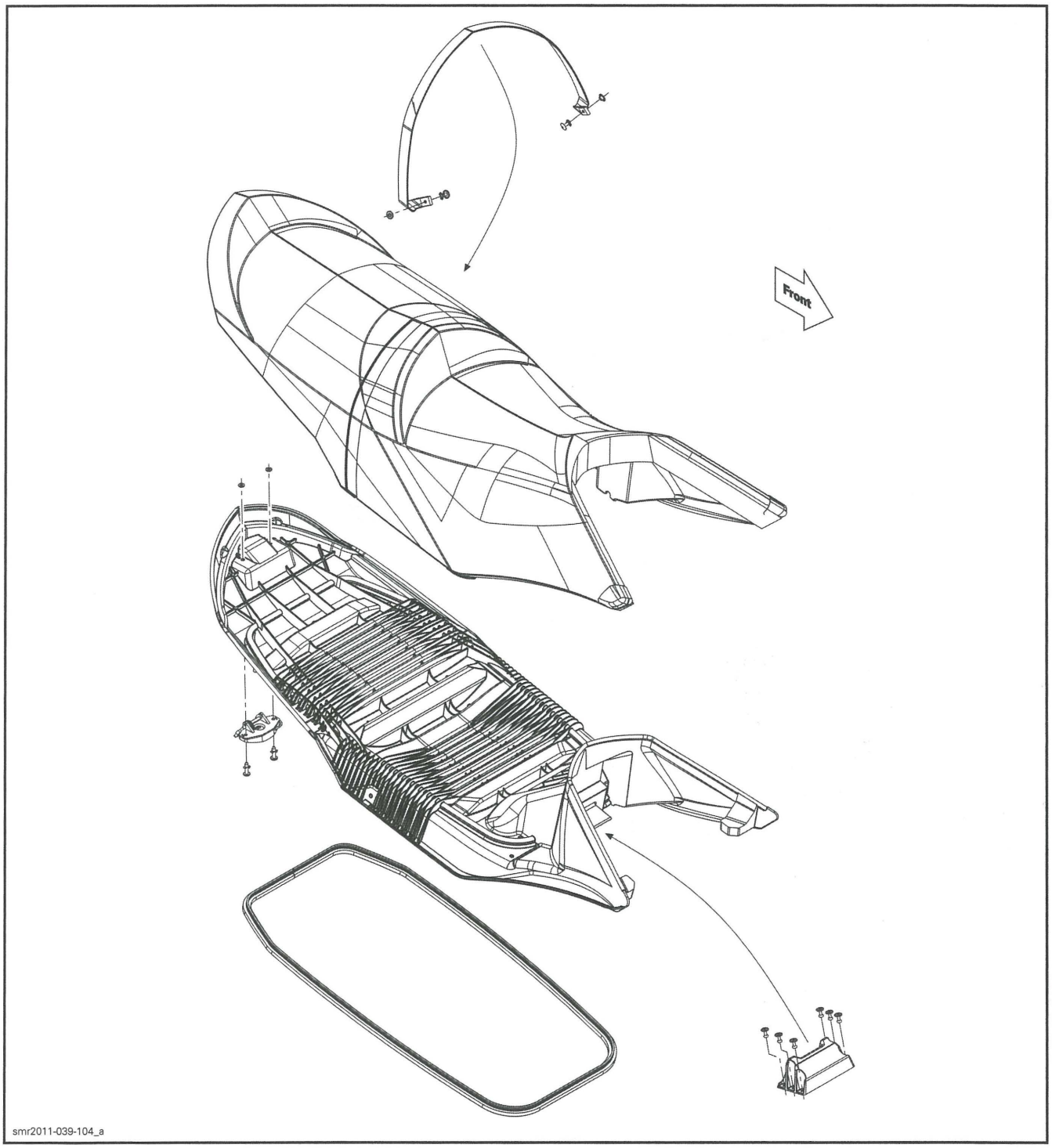

WAKEBOARD RACK AND WAKE PYLON

Wake 155

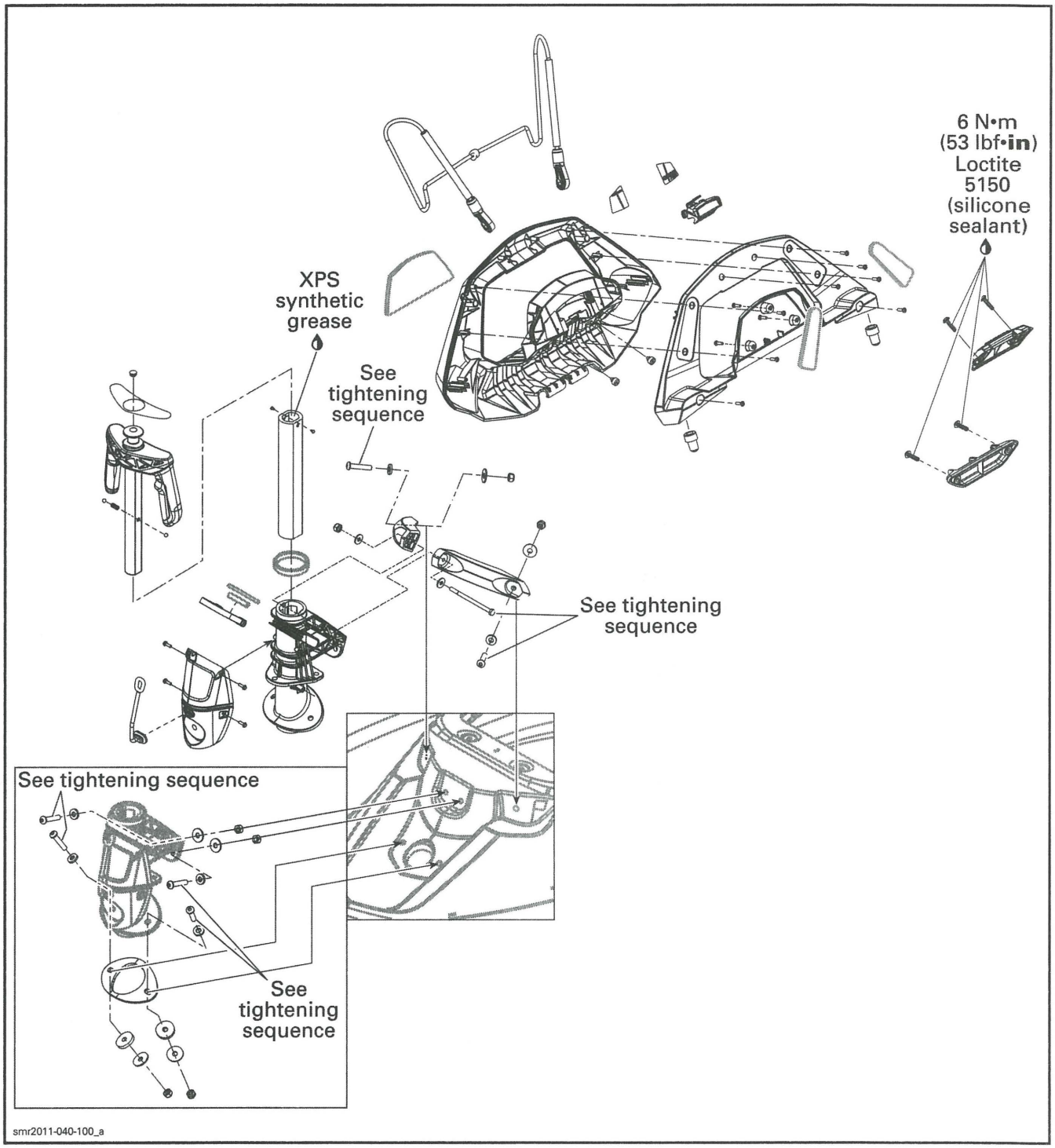

PROCEDURES

GELCOAT

For information and repair, refer to *BODY (RXT/GTX/WAKE PRO)* subsection.

DECALS

For information and repair, refer to *BODY (RXT/GTX/WAKE PRO)* subsection.

CARPETS

For information and repair, refer to *BODY (RXT/GTX/WAKE PRO)* subsection.

STORAGE COMPARTMENT COVER

Storage Compartment Cover Removal

1. Open storage compartment cover.
2. Remove nuts and bolts securing storage compartment cover to hinge.

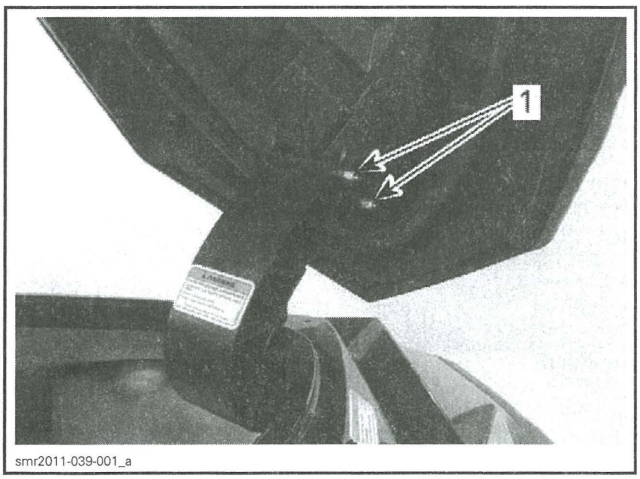

1. Retaining nuts

3. Remove storage compartment cover.

Storage Compartment Cover Disassembly

Storage Compartment Cover Inner Shell

1. Remove BRP logo located at the front of cover.
2. Remove inner shell retaining screws and bolt.

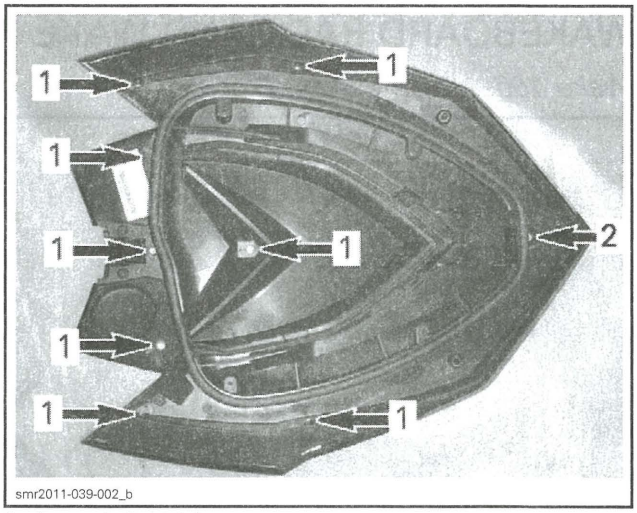

1. Inner shell retaining screws
2. Bolt

3. Unlatch both retaining tabs at the rear using a screwdriver.

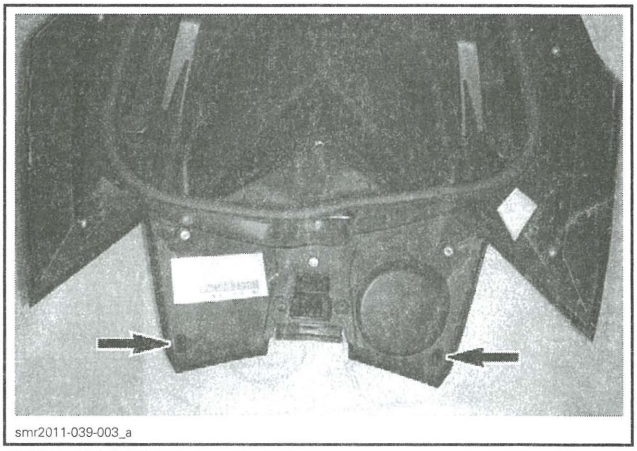

RETAINING TABS

4. Unlatch retaining tabs on both sides using a screwdriver.

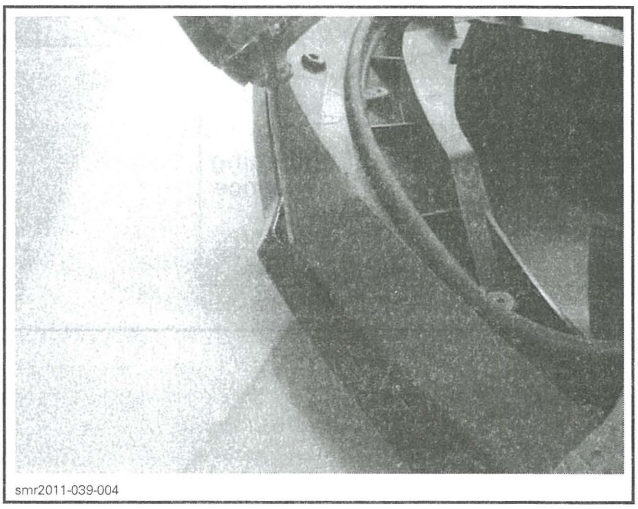

5. Disassemble inner shell from storage compartment cover.

Storage Compartment Cover Latch

1. Ensure that inner shell is removed.
2. Remove latch by slightly pushing both retaining holes toward the inside.

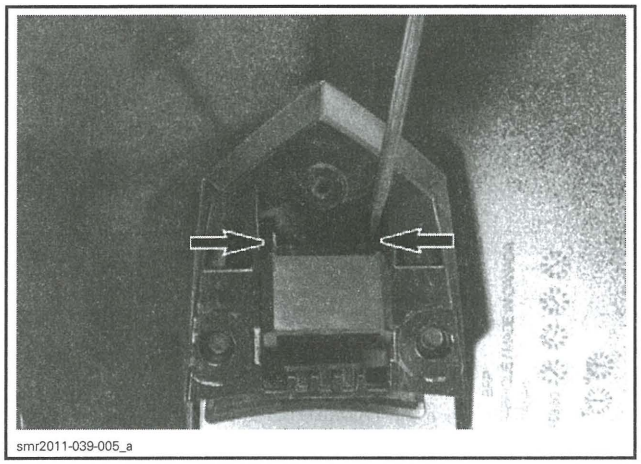

Storage Compartment Cover Assembly

The assembly is the reverse of the disassembly procedure. However, pay attention to the following.

Tighten inner shell retaining screws and bolt to specification as per the following sequence.

TIGHTENING TORQUE	
Inner shell retaining screws	2.0 N•m (18 lbf•**in**)
Inner shell retaining bolt	4.5 N•m (40 lbf•**in**)

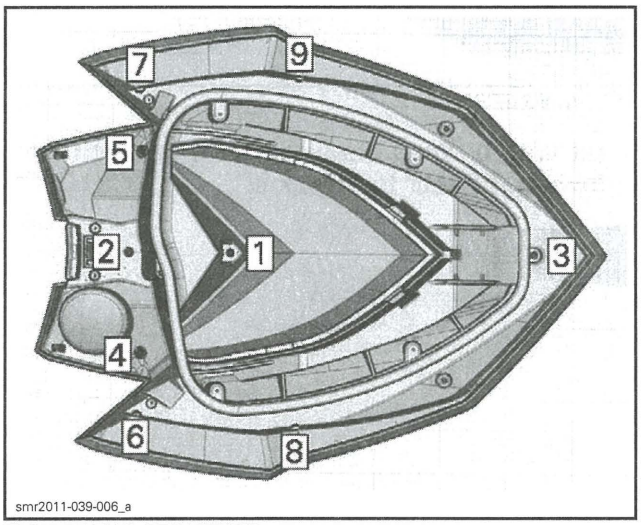

TIGHTENING SEQUENCE

Storage Compartment Cover Installation

The installation is the reverse of the removal procedure. However, pay attention to the following.

Tighten storage compartment cover retaining nuts to specification as per the following sequence.

TIGHTENING TORQUE	
Storage compartment cover retaining nuts	8.0 N•m (71 lbf•**in**)

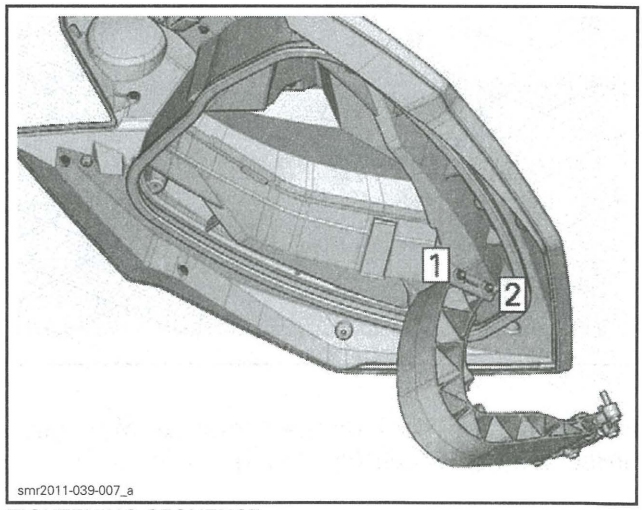

TIGHTENING SEQUENCE

STORAGE COMPARTMENT COVER HINGE

Storage Compartment Cover Hinge Removal

1. Proceed with *STORAGE COMPARTMENT COVER REMOVAL.*
2. Remove screws securing storage compartment cover hinge to deck.

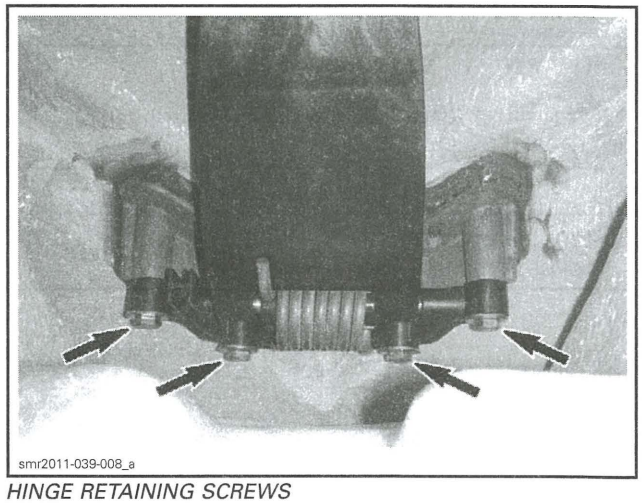

HINGE RETAINING SCREWS

Storage Compartment Cover Hinge Installation

The installation is the reverse of the removal procedure. However, pay attention to the following.

Use a ø 6.5 mm (1/4 in) steel rod to make a hook in order to lock the hinge.

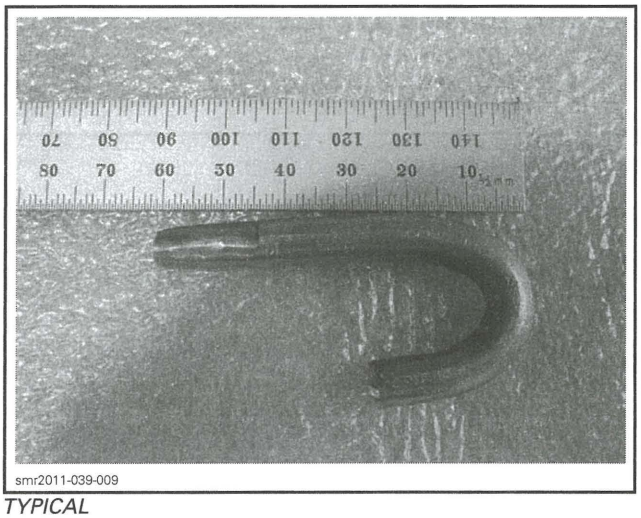

smr2011-039-009

TYPICAL

Insert the steel hook on the lateral tab of hinge in order to slightly load the spring.

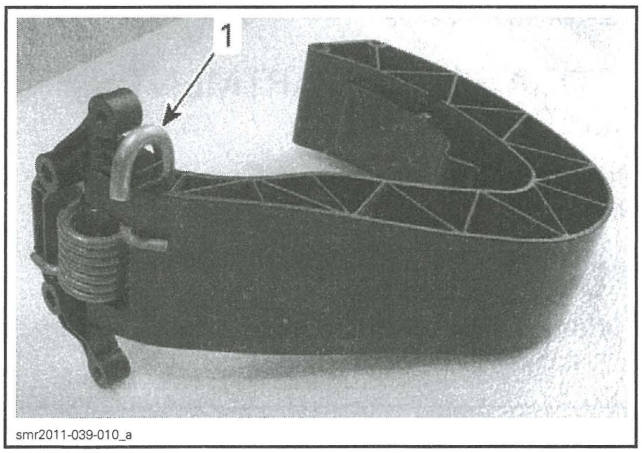

smr2011-039-010_a

1. Steel hook

Tighten hinge retaining screws to specification as per the following sequence.

TIGHTENING TORQUE	
Storage compartment cover hinge screws	8.0 N•m (71 lbf•**in**)

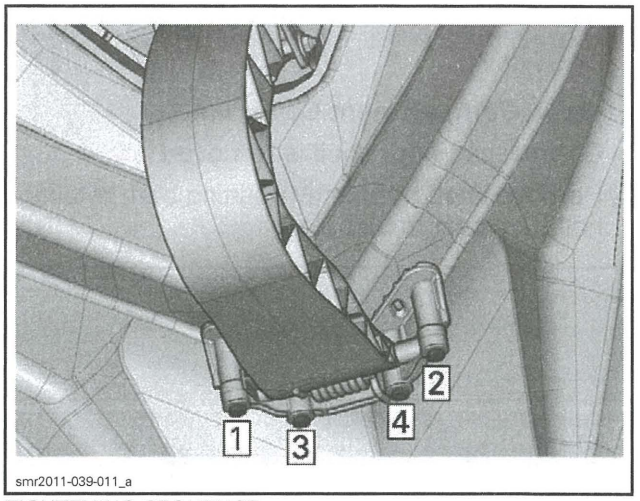

smr2011-039-011_a

TIGHTENING SEQUENCE

GAUGE TRIM

Gauge Trim Removal

1. Open storage compartment cover.
2. From underneath mirror, remove retaining screws on both sides.

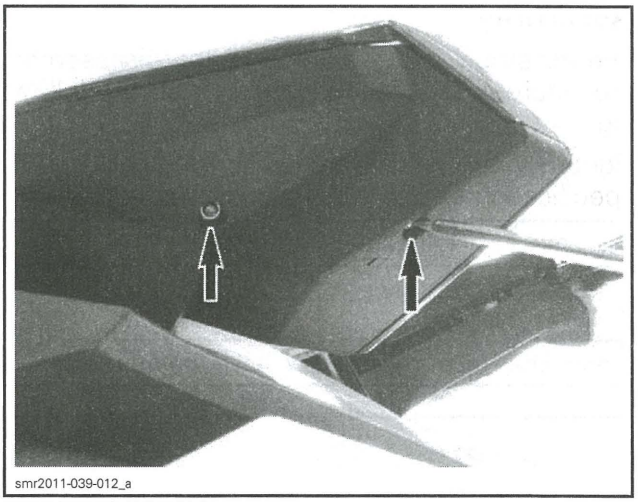

smr2011-039-012_a

RETAINING SCREWS

3. Hit with a sharp blow the front part of mirror toward the rear to unlock it.

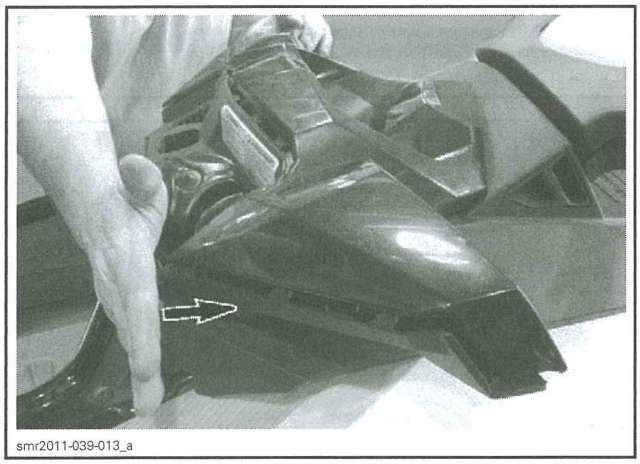
smr2011-039-013_a

4. Remove gauge trim from mirror support.

Gauge Trim Installation

The installation is the reverse of the removal procedure. However, pay attention to the following.

Prior to inserting gauge trim into mirror support, ensure that all tabs are properly aligned.

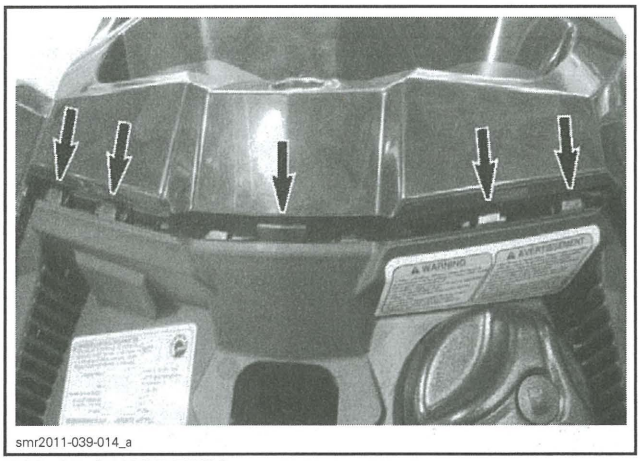
smr2011-039-014_a

TOP OF GAUGE TRIM

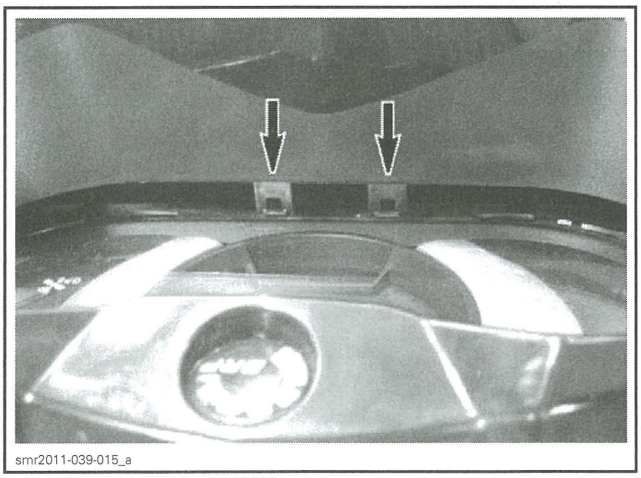
smr2011-039-015_a

BOTTOM OF GAUGE TRIM

LATERAL TRIM PANEL

Lateral Trim Panel Removal

1. Remove seat.
2. From inside storage compartment, remove screws securing lateral trim panel to deck.

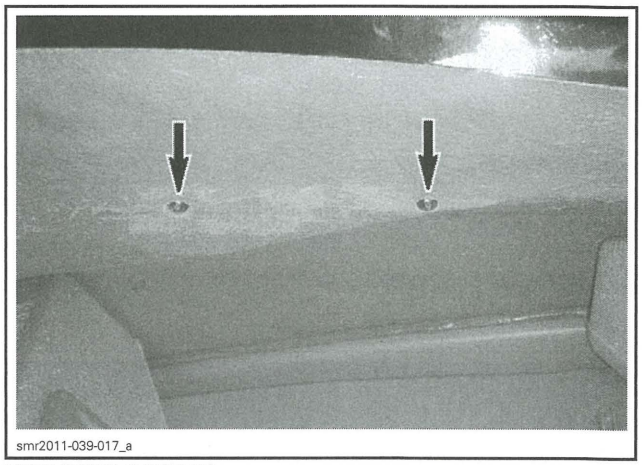
smr2011-039-017_a

RETAINING SCREWS

3. From inside storage compartment, remove plastic rivets securing lateral trim panel to deck.

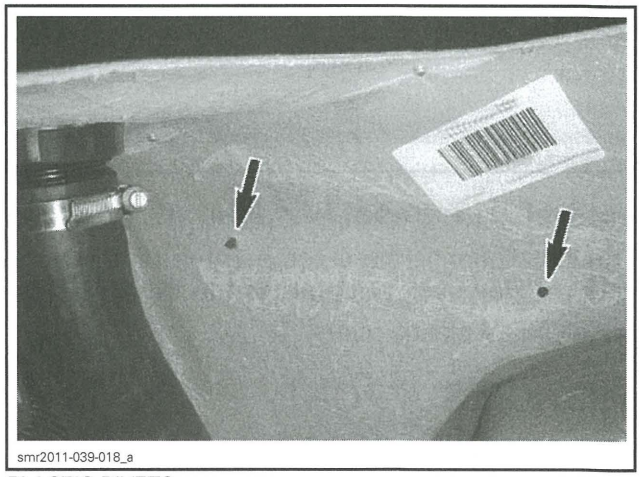
smr2011-039-018_a

PLASTIC RIVETS

4. Remove plastic rivets securing the rear portion of lateral trim panel.

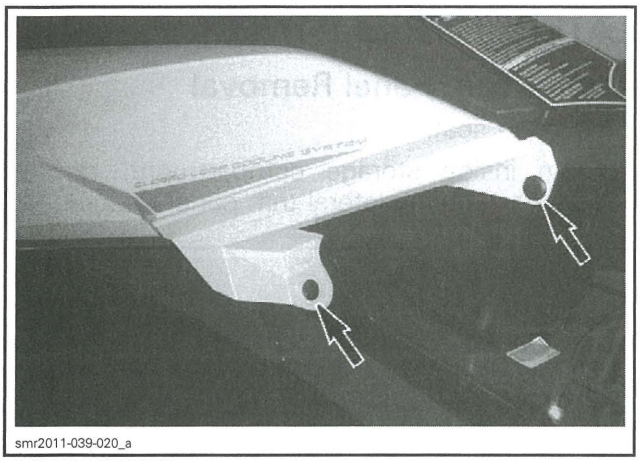
smr2011-039-020_a

PLASTIC RIVETS

5. Slide panel toward the front to unlock retaining tabs.

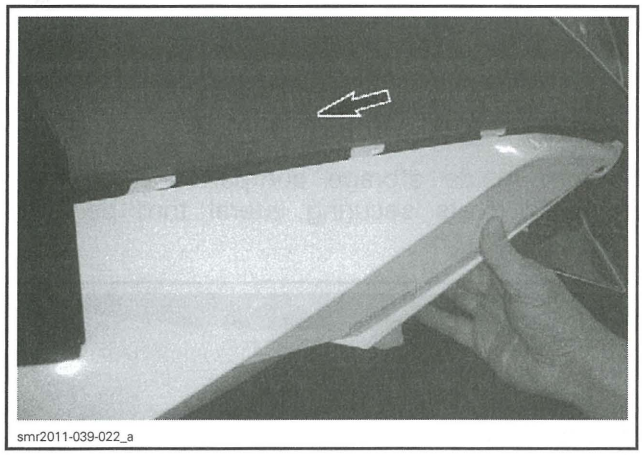
smr2011-039-022_a

Lateral Trim Panel Installation

The installation is the reverse of the removal procedure. However, pay attention to the following.

Install **NEW** plastic rivets.

MIRROR SUPPORT

Mirror Support Removal

1. Proceed with *LATERAL TRIM PANEL REMOVAL*. See procedure in this subsection.
2. Proceed with *INFORMATION CENTER REMOVAL*. Refer to *INFORMATION CENTER (GAUGE)* subsection.
3. Remove steering column, refer to *STEERING AND O.T.A.S.* subsection.
4. Remove the following rivets securing mirror support to deck.

REQUIRED TOOL
SUPERTANIUM DRILL BIT 3/16" (P/N 529 031 800)

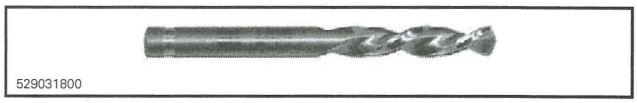
529031800

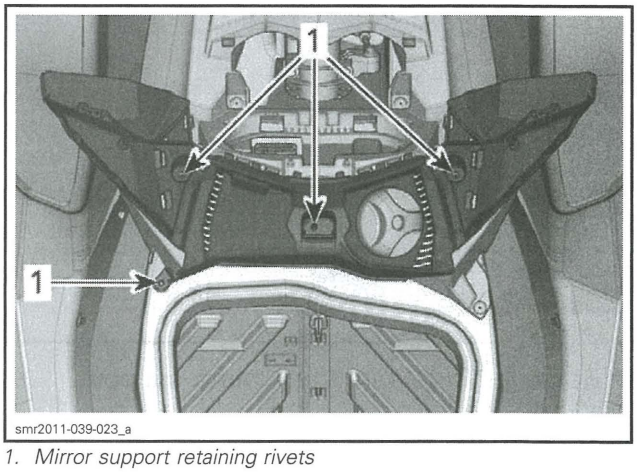

smr2011-039-023_a

1. Mirror support retaining rivets

5. Remove fuel tank cap.
6. Place a **clean** cloth rag onto fuel tank tube.
7. Unlatch retaining tabs on both sides using a screwdriver.

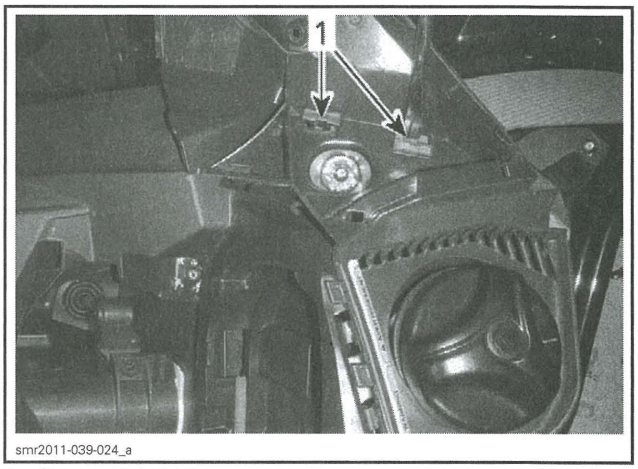

smr2011-039-024_a

1. Side retaining tabs

8. Unlatch retaining tabs on the top using a screwdriver.

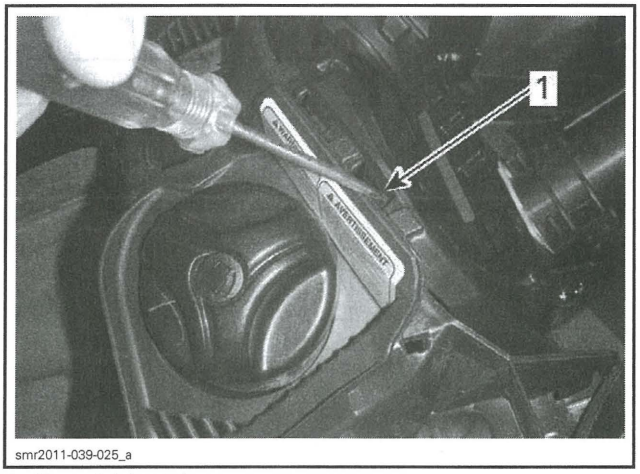

1. Top retaining tab

9. Remove mirror support by pulling it upwards.
10. Remove cloth rag and reinstall fuel tank cap.

⚠ WARNING

Fuel vapors are flammable and explosive under certain conditions. Unless otherwise noted, the fuel tank cap must always be installed on watercraft.

Mirror Support Installation

The installation is the reverse of the removal procedure. However, pay attention to the following.

Prior to inserting mirror support into console, ensure that all tabs are properly aligned.

Install rivets upside down with washers on mirror support top surface.

MIRRORS

Mirror Replacement

1. Proceed with *GAUGE TRIM REMOVAL*, see procedure in this subsection.
2. From inside gauge trim, slightly heat mirror.
3. Push at the back of mirror to remove it.
4. Properly clean gauge trim surface of any glue residue.
5. Install mirror using adhesive tape at the back of mirror.
6. Reinstall gauge trim as the reverse of removal.

CONSOLE

Console Removal

1. Proceed with *MIRROR SUPPORT REMOVAL*. See procedure in this subsection.
2. Remove *GLOVE BOX COVER*, see procedure in this subsection.
3. Remove the following rivets securing console to deck.

REQUIRED TOOL
SUPERTANIUM DRILL BIT 3/16" (P/N 529 031 800)

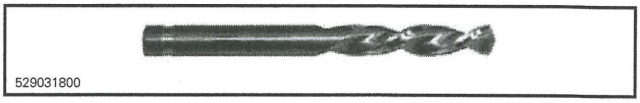

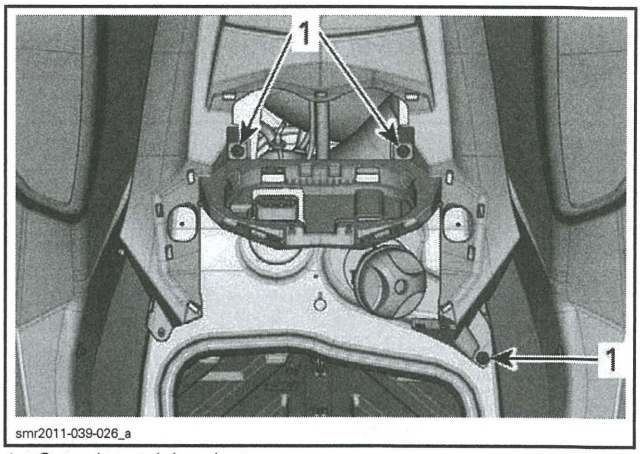

1. Console retaining rivets

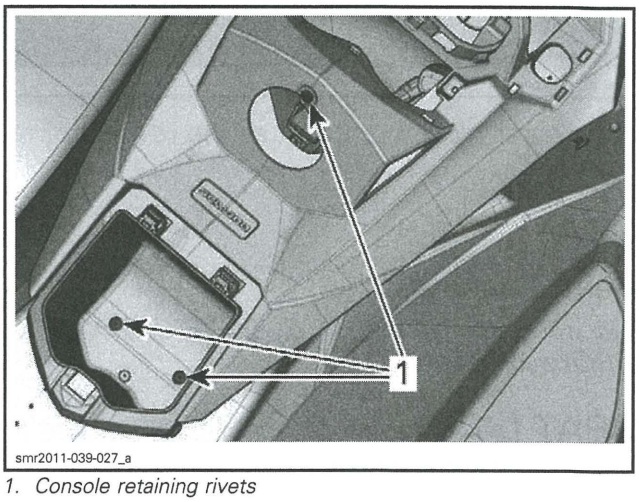

1. Console retaining rivets

4. Remove console by pulling it upwards.

Console Installation

The installation is the reverse of the removal procedure. However, pay attention to the following.

To ease installation of rivets located in glove box, proceed as follows:

- Remove air intake silencer, refer to *AIR INTAKE SYSTEM (EXCEPT iS AND aS MODELS)* subsection.
- Install rivets upside down with washers on console top surface.

GLOVE BOX COVER

Glove Box Cover Replacement

1. Open glove box cover.
2. Pull glove box cover upwards to release it from console hinge.

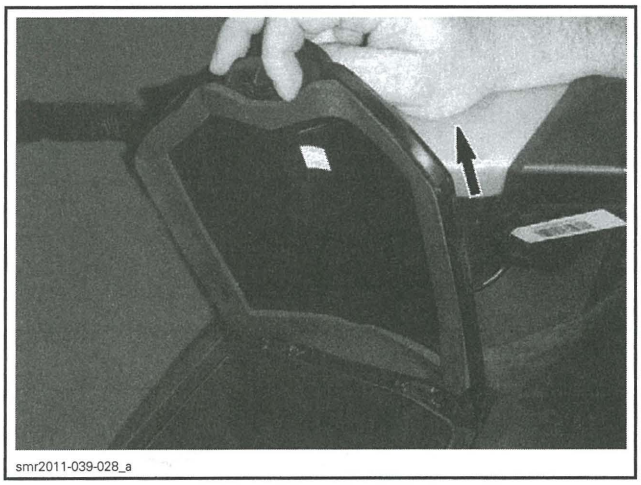

3. Reinstall glove box cover as the reverse of removal.

SEAT

Seat Cleaning

For information, refer to *BODY (RXT/GTX/WAKE PRO)* subsection.

SEAT LATCH

Seat Latch Adjustment

NOTE: Apply LOCTITE 243 (BLUE) (P/N 293 800 060) on threads of lock pin when the adjustment is required or when the lock pin is removed. If a new lock pin is used, it is already coat with a threadlocker.

1. Loosen adjustment nut.
2. Adjust lock pin height. Do not torque yet.
3. Position the lock pin longitudinally into the rear handle slot.

LOCK PIN POSITIONING	
MEASURE A	MEASURE B
24.0 mm ± 1.0 mm (.945 in ± .039 in)	30 mm ± 1.0 mm (1.181 in ± .039 in)

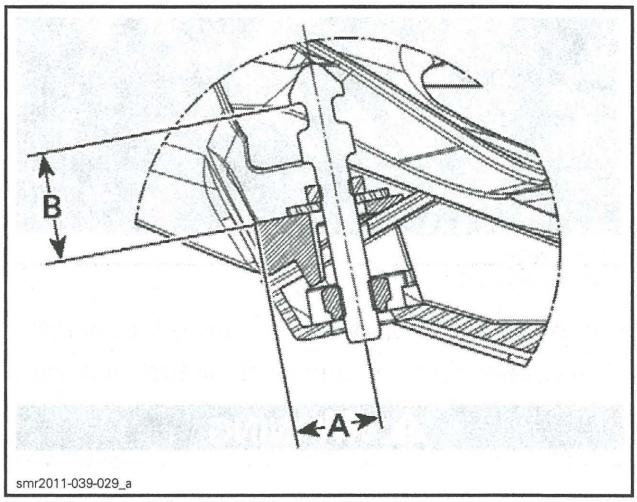

A. 24.0 mm ± 1.0 mm (.945 in ± .039 in)
B. 30 mm ± 1.0 mm (1.181 in ± .039 in)

4. Hold the lock pin in this position and tighten as per the following sequence.

SEAT LATCH TIGHTENING SEQUENCE		
STEP 1	Lock pin	9.5 N•m (84 lbf•**in**)
STEP 2	Adjustment nut	8.0 N•m (71 lbf•**in**)

5. Close the seat and readjust if required.

REAR HANDLE

Rear Handle Replacement

1. Remove seat.
2. Remove screws securing rear handle to deck.

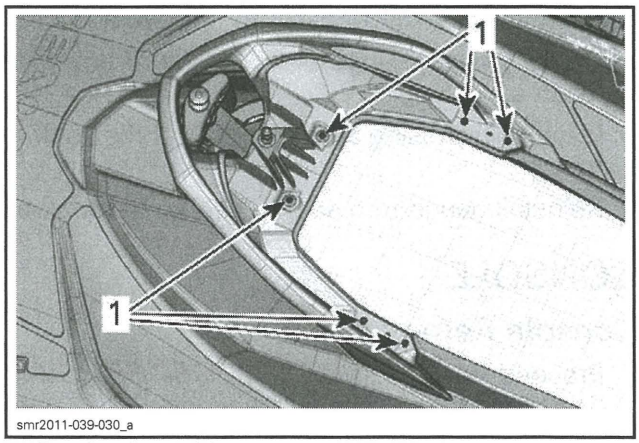

1. Rear handle retaining screws

3. Replace rear handle.
4. Tighten rear handle screws to specification.

TIGHTENING TORQUE	
Rear handle screws	8.0 N•m (71 lbf•**in**)

BUMPER

Bumper Replacement

1. Remove screws securing front bumper.
2. Remove front bumper from deck.

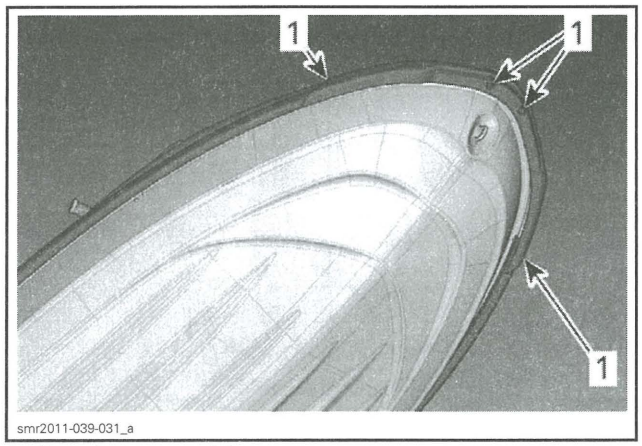

1. Front bumper retaining screws

3. Remove screws securing both rear corner bumpers.
4. Remove rear corner bumpers from deck.

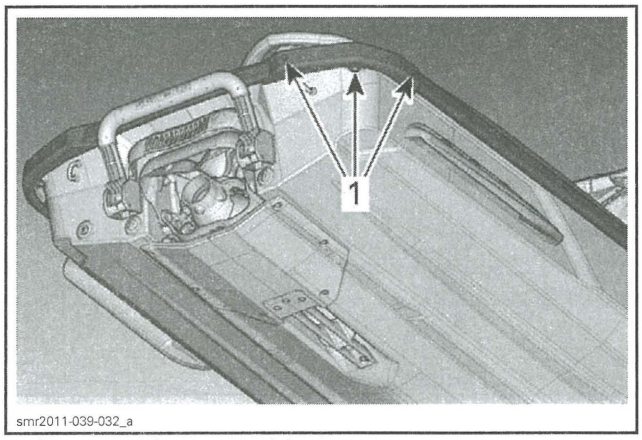

1. Rear corner bumper retaining screws

5. Slide side bumpers toward the rear to remove them from deck.
6. Slide rear bumper toward the side to remove it from deck.

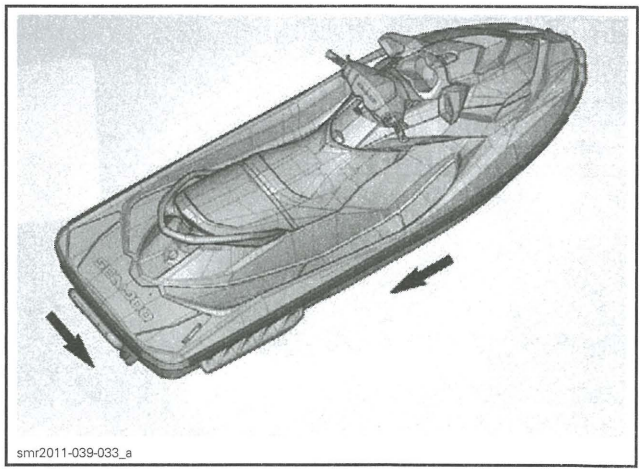

7. Install **new** bumpers as the reverse of removal.

NOTE: Use soapy water to ease bumper installation.

8. Tighten front bumper lower retaining screws to specification.

TIGHTENING TORQUE	
Front bumper **lower** screws	4.5 N•m (40 lbf•**in**)

9. Tighten bumper retaining screws to specification as per the following sequence.

TIGHTENING TORQUE	
Bumper retaining screws	4.5 N•m (40 lbf•**in**)

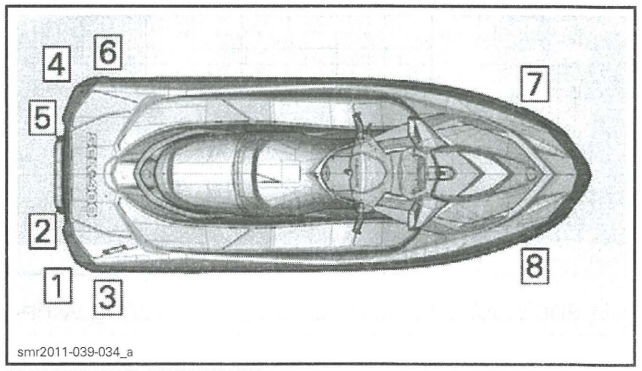

TIGHTENING SEQUENCE

VENTILATION DUCT

Ventilation Duct Replacement

1. Proceed with *LATERAL TRIM PANEL REMOVAL*. See procedure in this subsection.
2. Remove plastic rivet securing ventilation duct to housing.

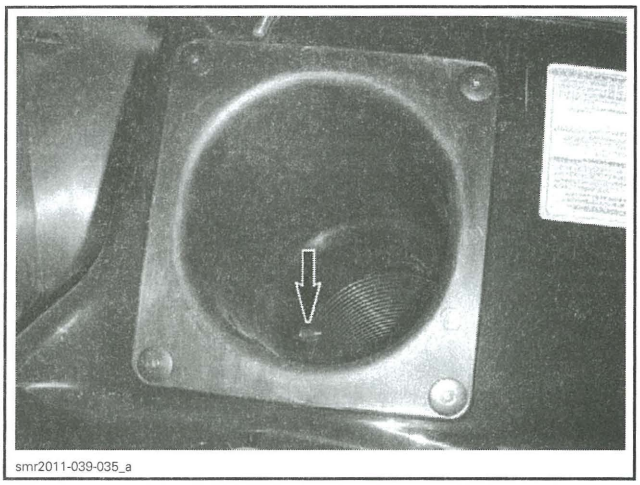
smr2011-039-035_a

3. Remove the following rivets securing ventilation duct housing to deck.

REQUIRED TOOL
SUPERTANIUM DRILL BIT 3/16" (P/N 529 031 800)

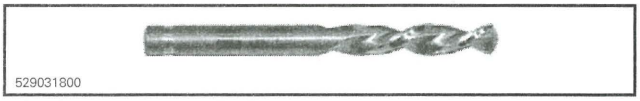
529031800

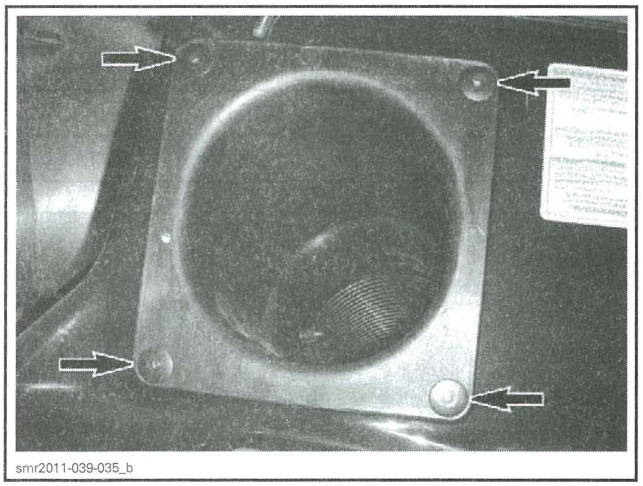
smr2011-039-035_b

4. If applicable, remove locking tie securing wiring harness to ventilation duct.
5. Remove ventilation duct and its housing from watercraft.
6. Reinstall parts as the reverse of removal.

WAKE PYLON (WAKE)

Wake Pylon Removal

Open the seat.

Remove both lateral arms.

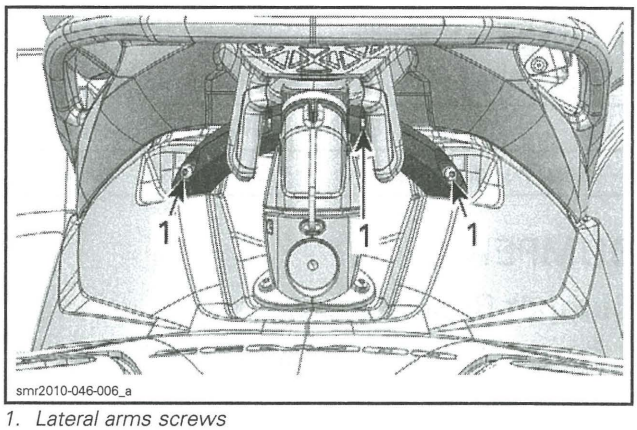

smr2010-046-006_a

1. Lateral arms screws

Remove bolts at the bottom of wake pylon.

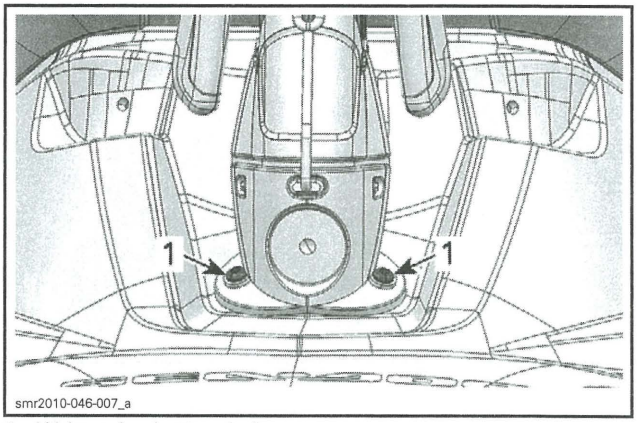

smr2010-046-007_a

1. Wake pylon bottom bolts

Remove bolts securing the wake pylon support to body.

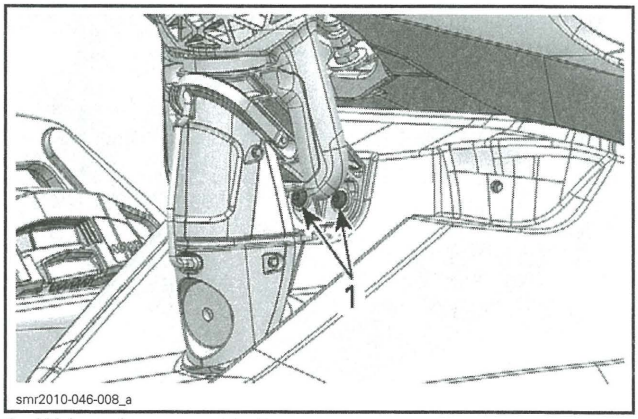

smr2010-046-008_a

1. Wake pylon support bolts

Lift the wake pylon to disengage its bottom from the body.

Slide the bottom of the wake pylon rearward to remove the wake pylon from vehicle.

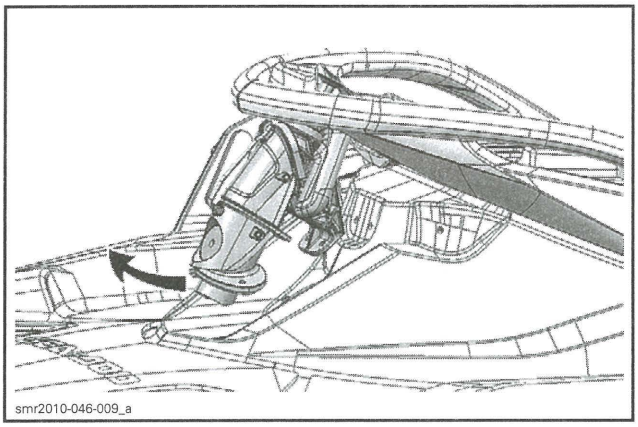
smr2010-046-009_a

Wake Pylon Disassembly

Extend the handle completely.

Turn the wake pylon upside down.

Move both ends of locking strap to disengage the inner lock and free the handle.

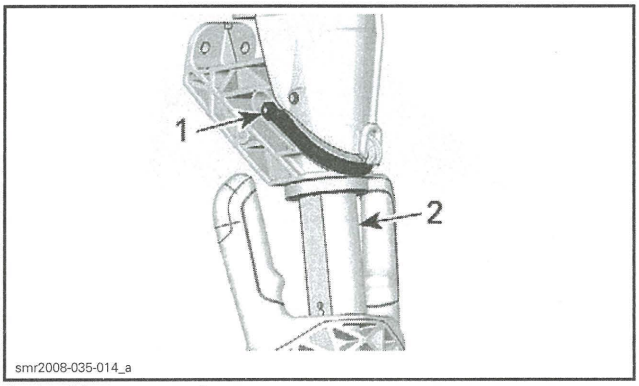

smr2008-035-014_a

1. *Locking strap end*
2. *Handle stem*

Locking Strap

Using a screwdriver or any other suitable tool, detach a side of the locking strap from retaining pin.

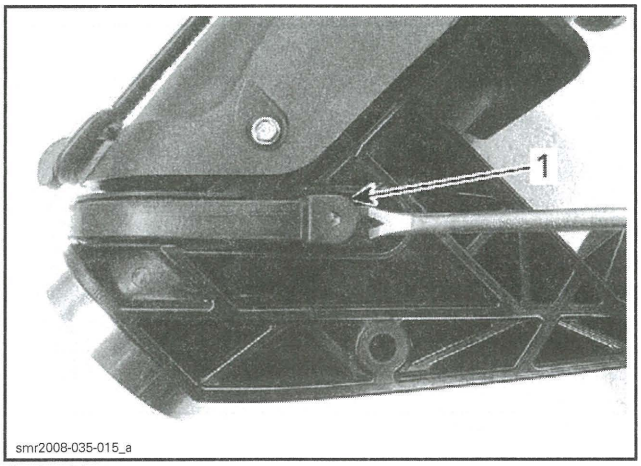

smr2008-035-015_a

1. *Locking strap*

Remove locking strap and the inner lock.

Handle

Extend handle approximately 75 mm to 90 mm (3 in to 3-1/2 in).

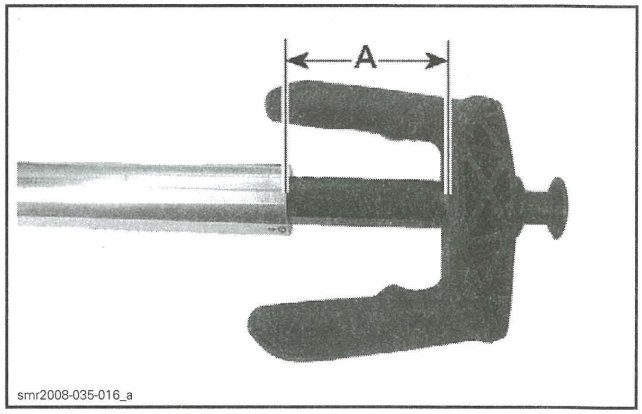

smr2008-035-016_a

A. *75 mm to 90 mm (3 in to 3-1/2 in)*

Insert two thin feeler gauges between handle stem and extension tube.

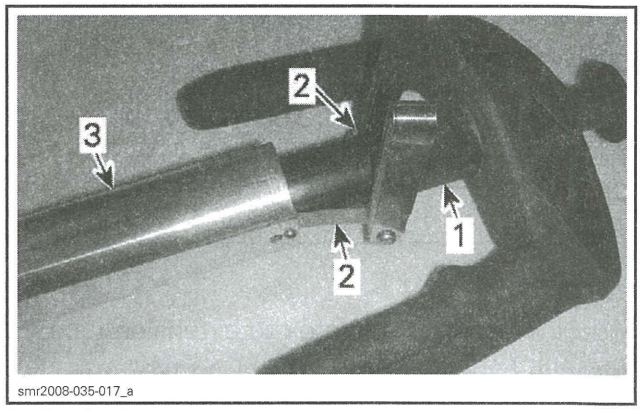

smr2008-035-017_a

1. *Handle stem*
2. *Feeler gauges*
3. *Extension tube*

Place a rag around the joint to catch balls and spring.

Hold feeler gauges and pull the handle.

Wake Pylon Assembly

Handle

Install a loose locking tie on handle stem.

Apply XPS SYNTHETIC GREASE (P/N 293 550 010) on each ends of spring.

Insert the spring in the handle stem hole.

Position a ball on each ends of spring.

Install a feeler gauge over each balls.

Tighten the locking tie in order to retain feeler gauges and balls.

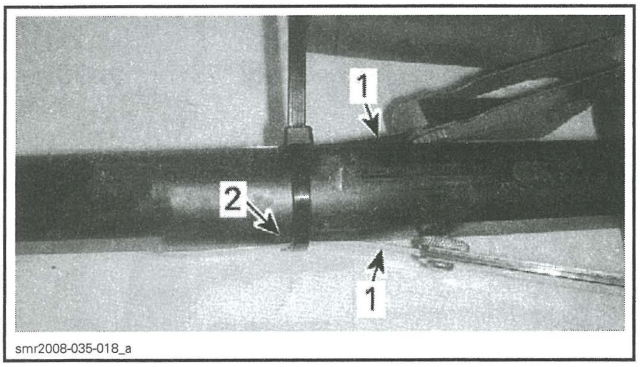

1. *Feeler gauges*
2. *Ball*

Apply XPS SYNTHETIC GREASE (P/N 293 550 010) in both recesses of the extension tube.

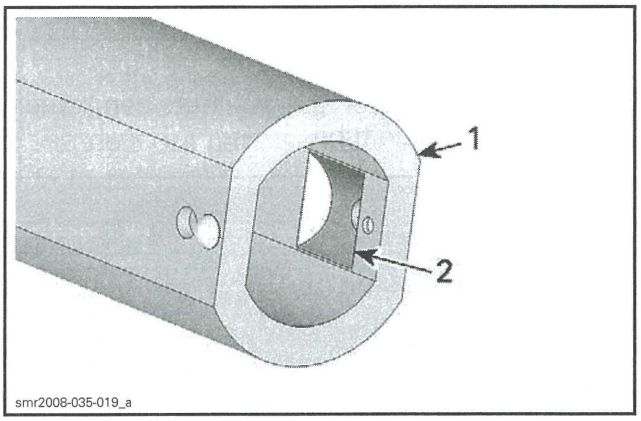

1. *Extension tube*
2. *Recesses*

Slide the handle stem into the extension tube.

Remove feeler gauges and locking tie.

Locking Strap

Remove the wake pylon trim.

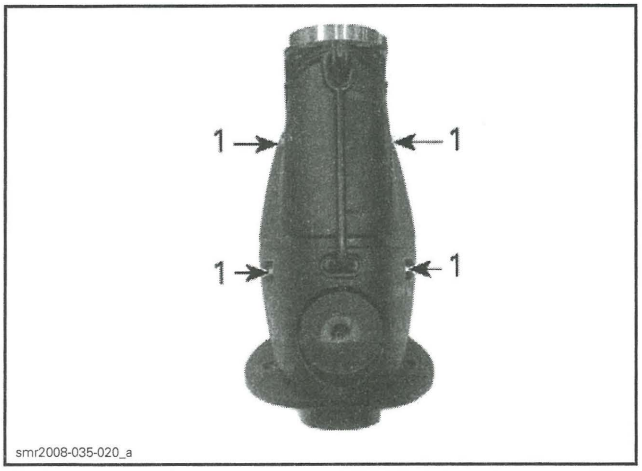

1. *Wake pylon trim screws*

Install lock and insert the end of the locking strap over the retaining pin.

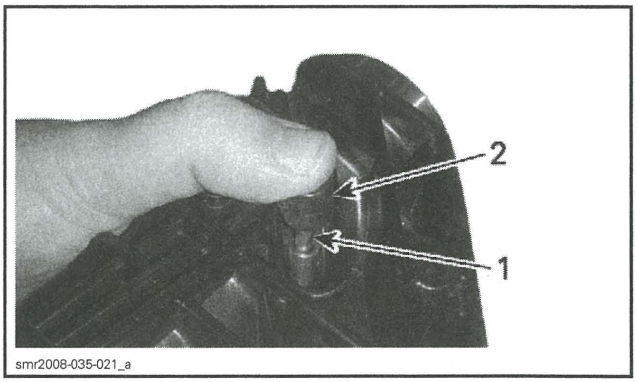

1. *Retaining pin*
2. *Locking strap*

Using a suitable tool, position the locking strap in its groove.

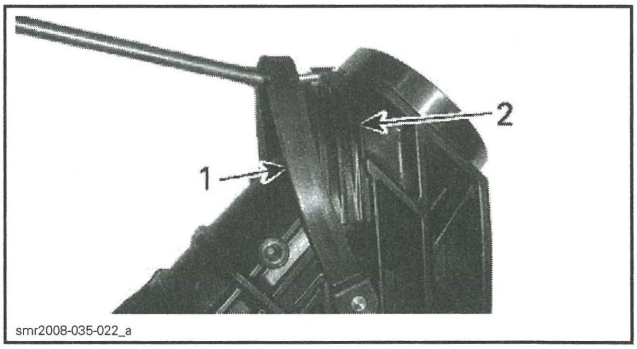

1. *Locking strap*
2. *Locking strap groove*

Reinstall the wake pylon trim.

Do not install the handle into wake pylon yet.

Wake Pylon Installation

Position the wake pylon on deck.

Install and secure wake pylon and lateral arms using previously removed fasteners and new elastic stop nuts.

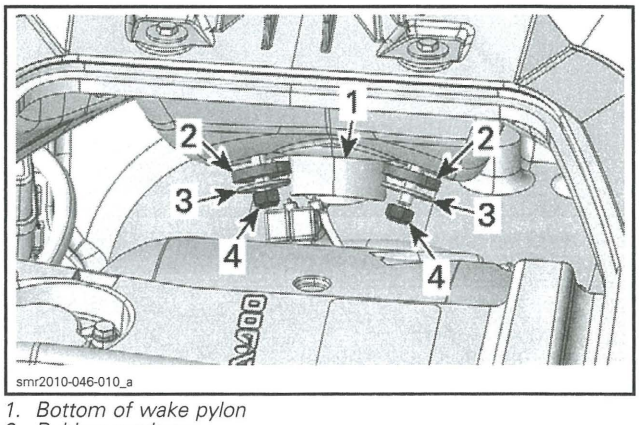

1. *Bottom of wake pylon*
2. *Rubber washers*
3. *Flat washers*
4. *New elastic stop nuts*

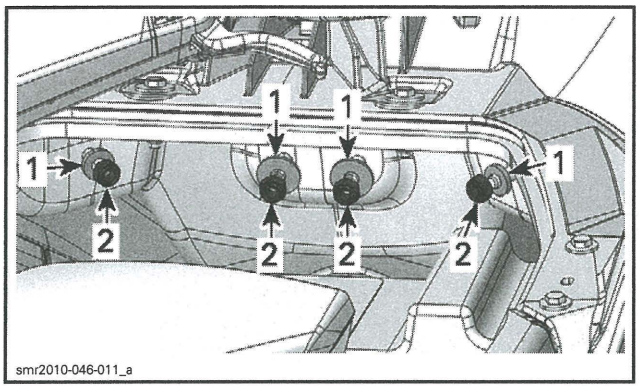

1. *Flat washers*
2. *New elastic stop nuts*

Tighten all bolts by hand.

Ensure base of wake pylon is well leaned against body.

Tighten all bolts as per the following sequence.

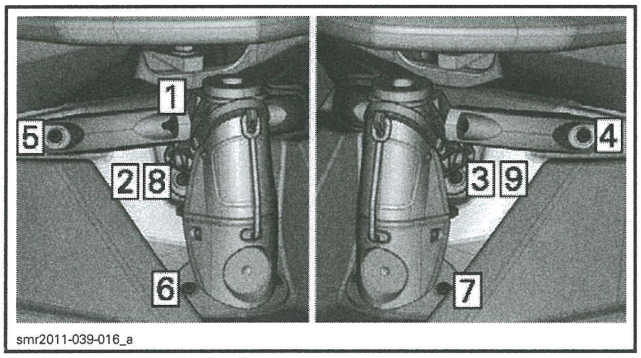

TIGHTENING SEQUENCE

Insert the handle into the wake pylon.

Move both ends of the locking strap forward to fully insert handle.

BODY (RXT/GTX/WAKE PRO)

SERVICE TOOLS

Description	Part Number	Page
SUPERTANIUM DRILL BIT 3/16"	529 031 800	234

SERVICE PRODUCTS

Description	Part Number	Page
LOCTITE 243 (BLUE)	293 800 060	228
LOCTITE 414	413 705 800	226, 244
LOCTITE 5150 (SILICONE SEALANT)	296 000 309	239
XPS MULTI-PURPOSE CLEANER	219 701 709	227
XPS SYNTHETIC GREASE	293 550 010	258

BODY (MODELS WITH SUSPENSION)

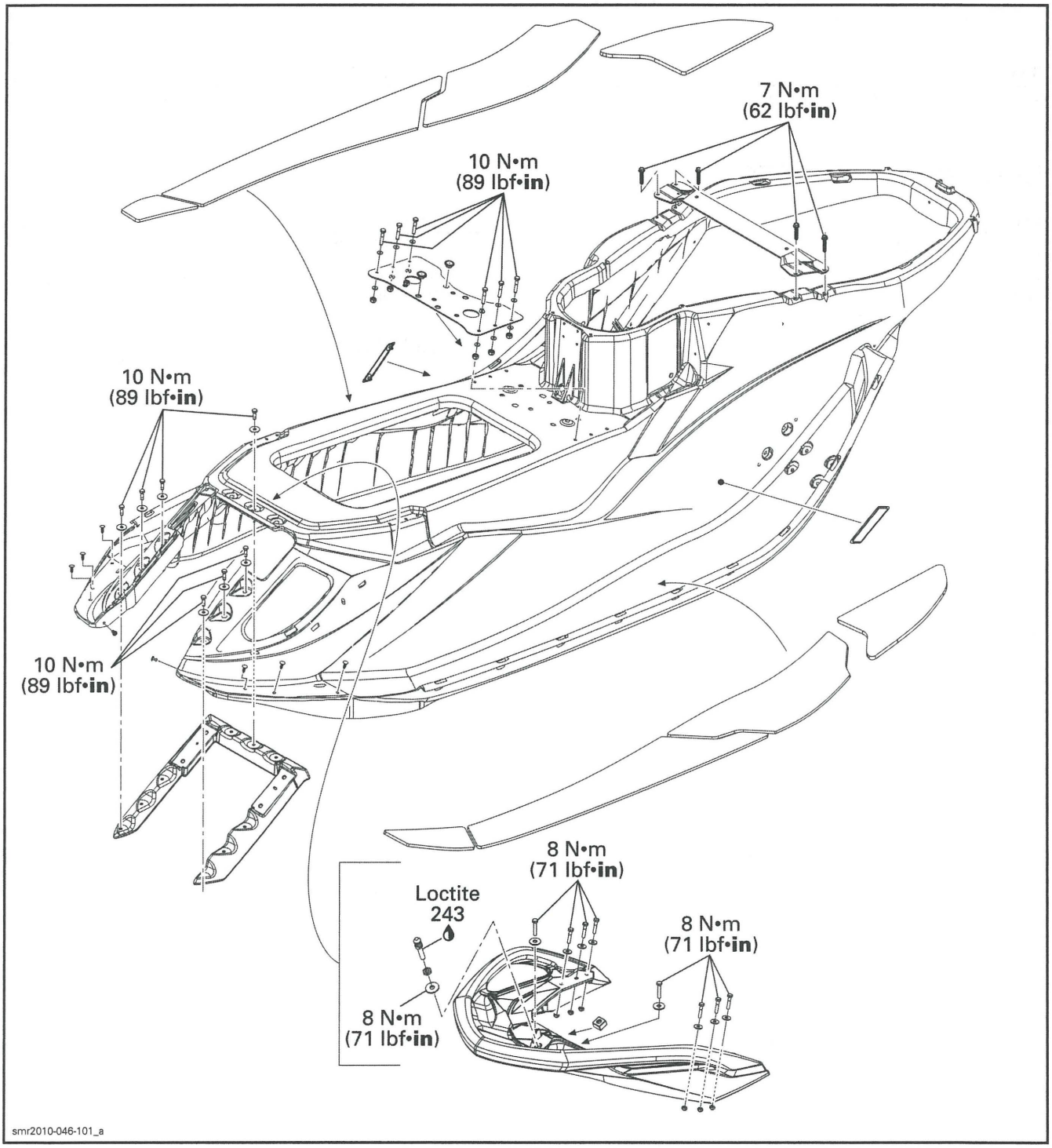

BODY (MODELS WITH SUSPENSION)

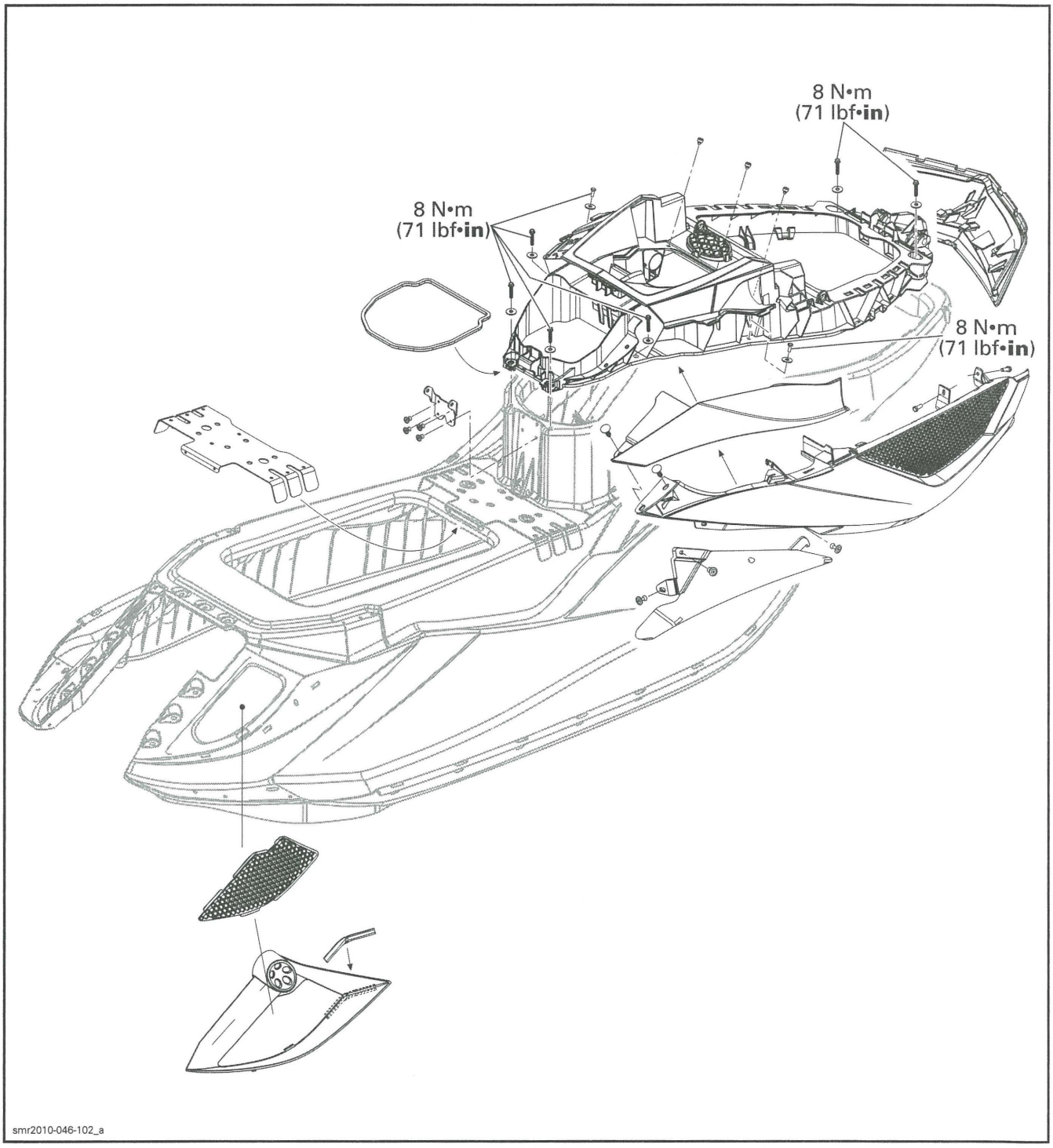

BODY (MODELS WITH SUSPENSION)

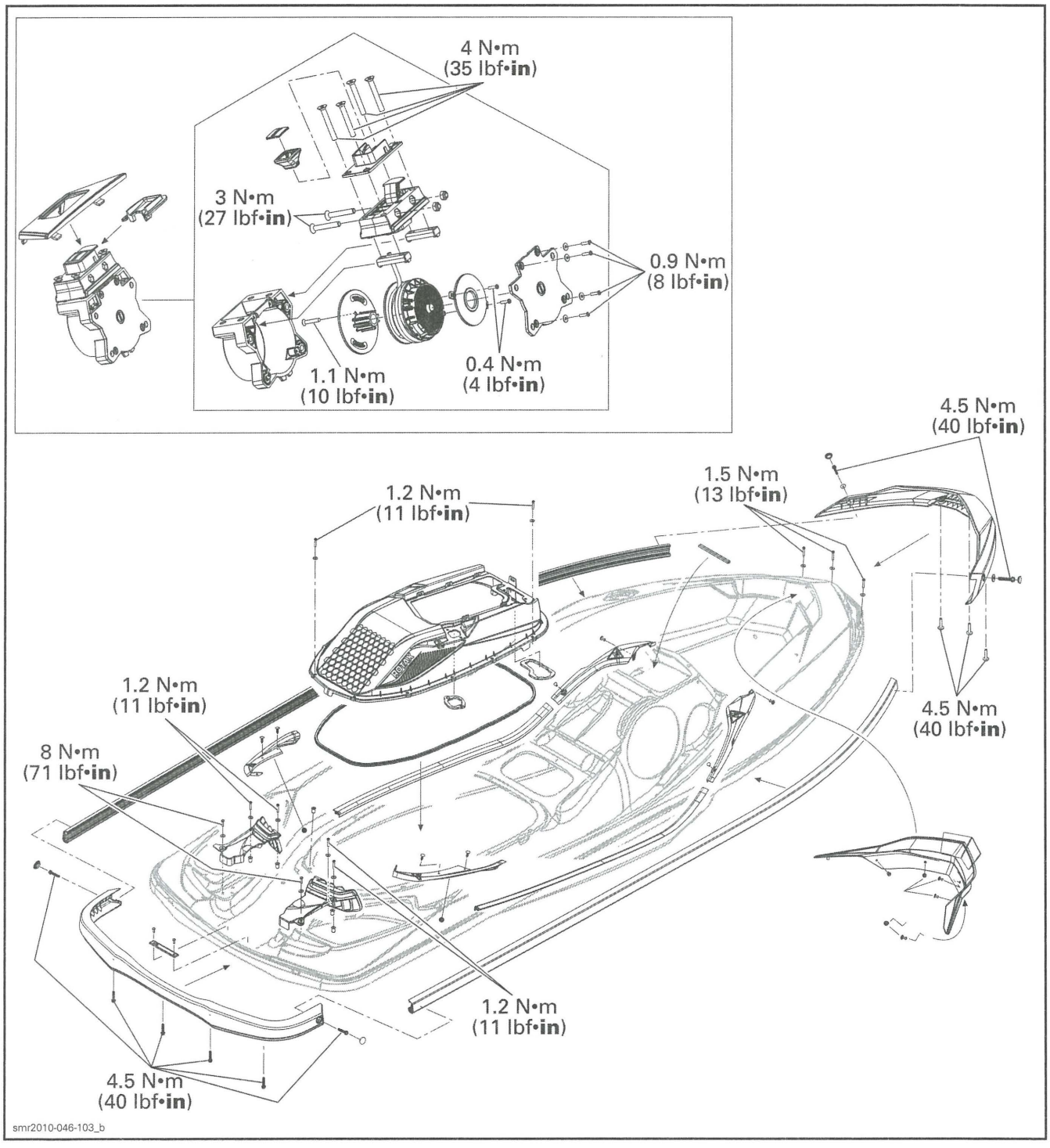

BODY (MODELS WITHOUT SUSPENSION)

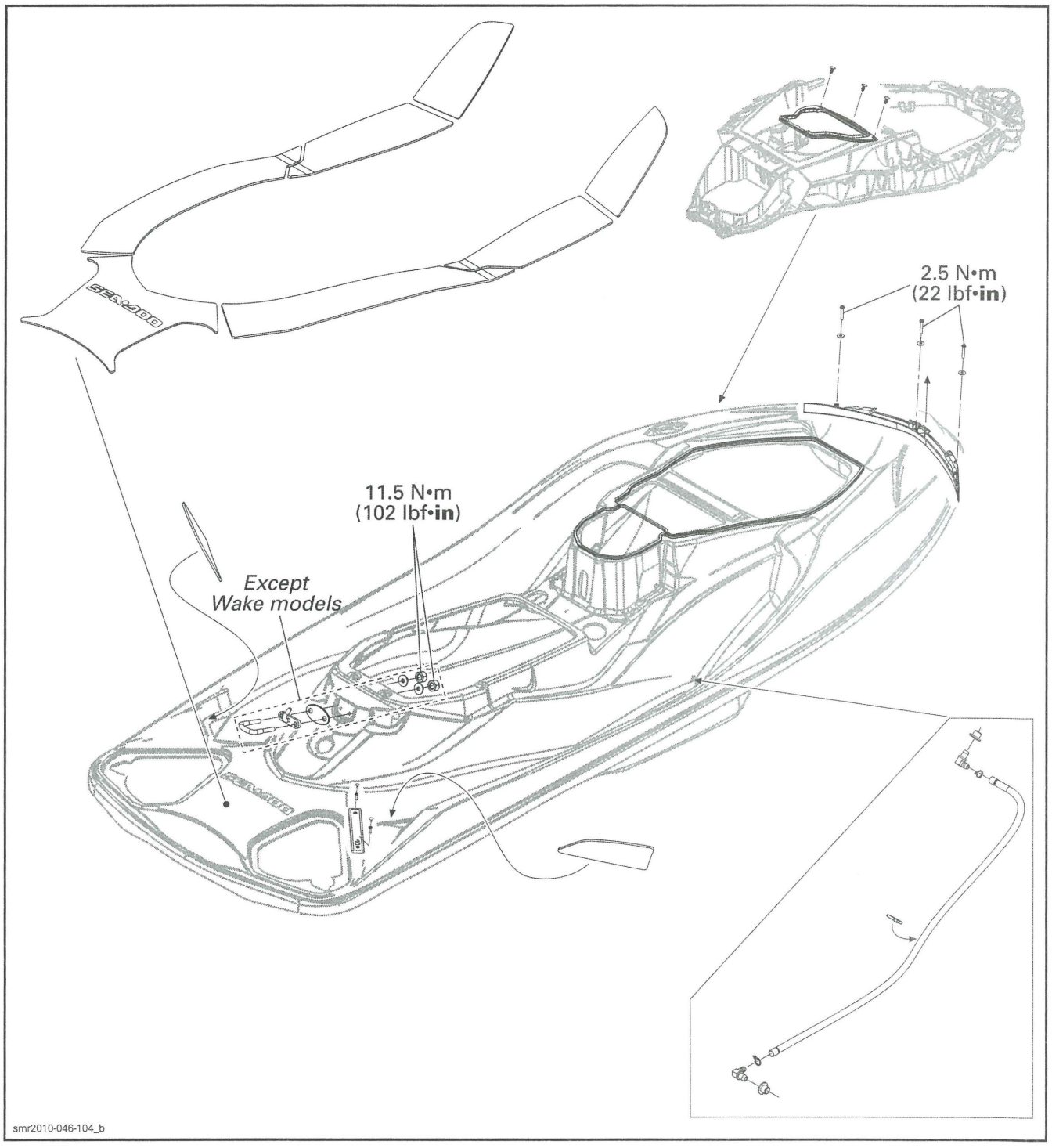

BODY (MODELS WITHOUT SUSPENSION)

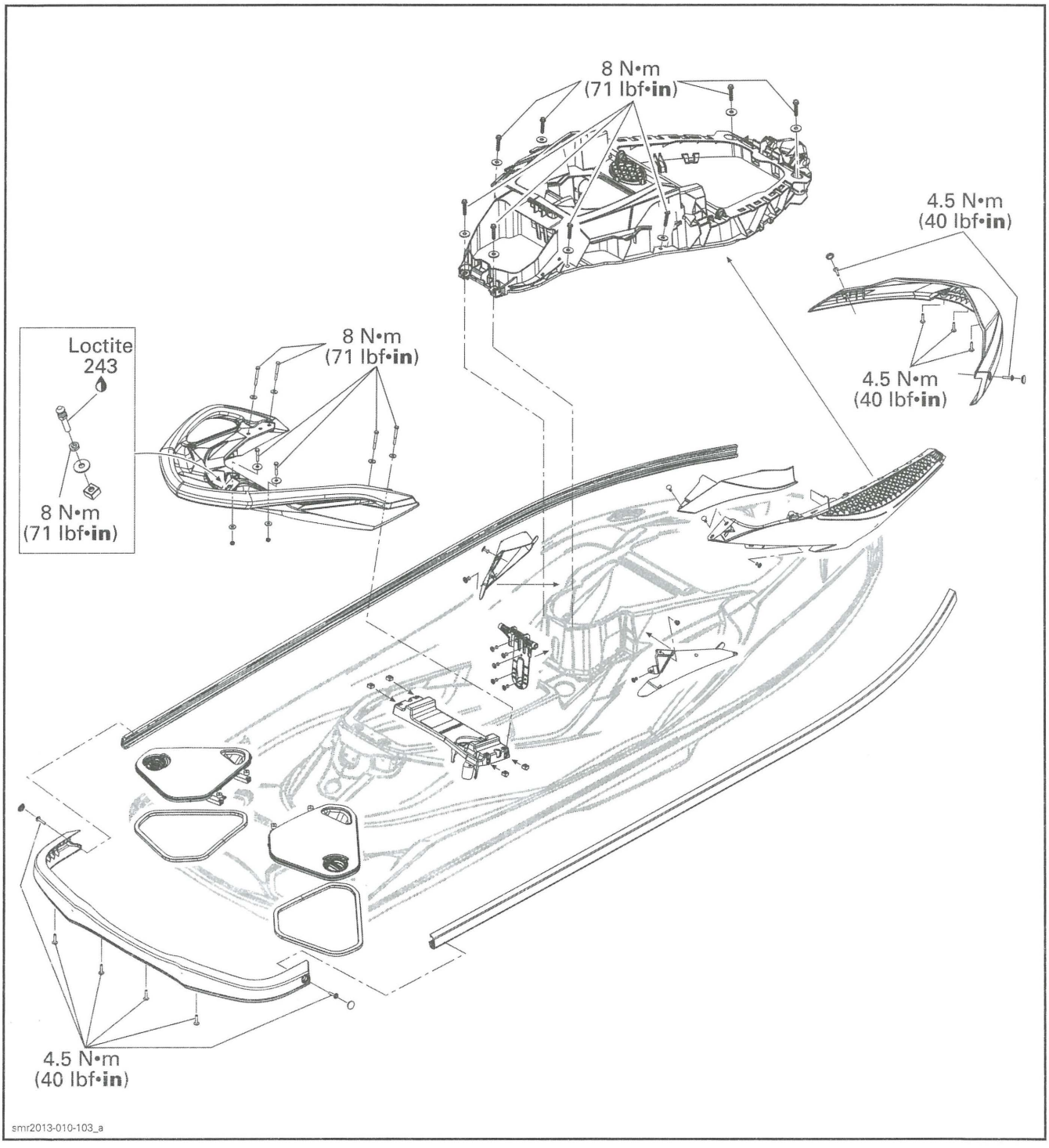

STORAGE COMPARTMENT (MODELS WITH SUSPENSION)

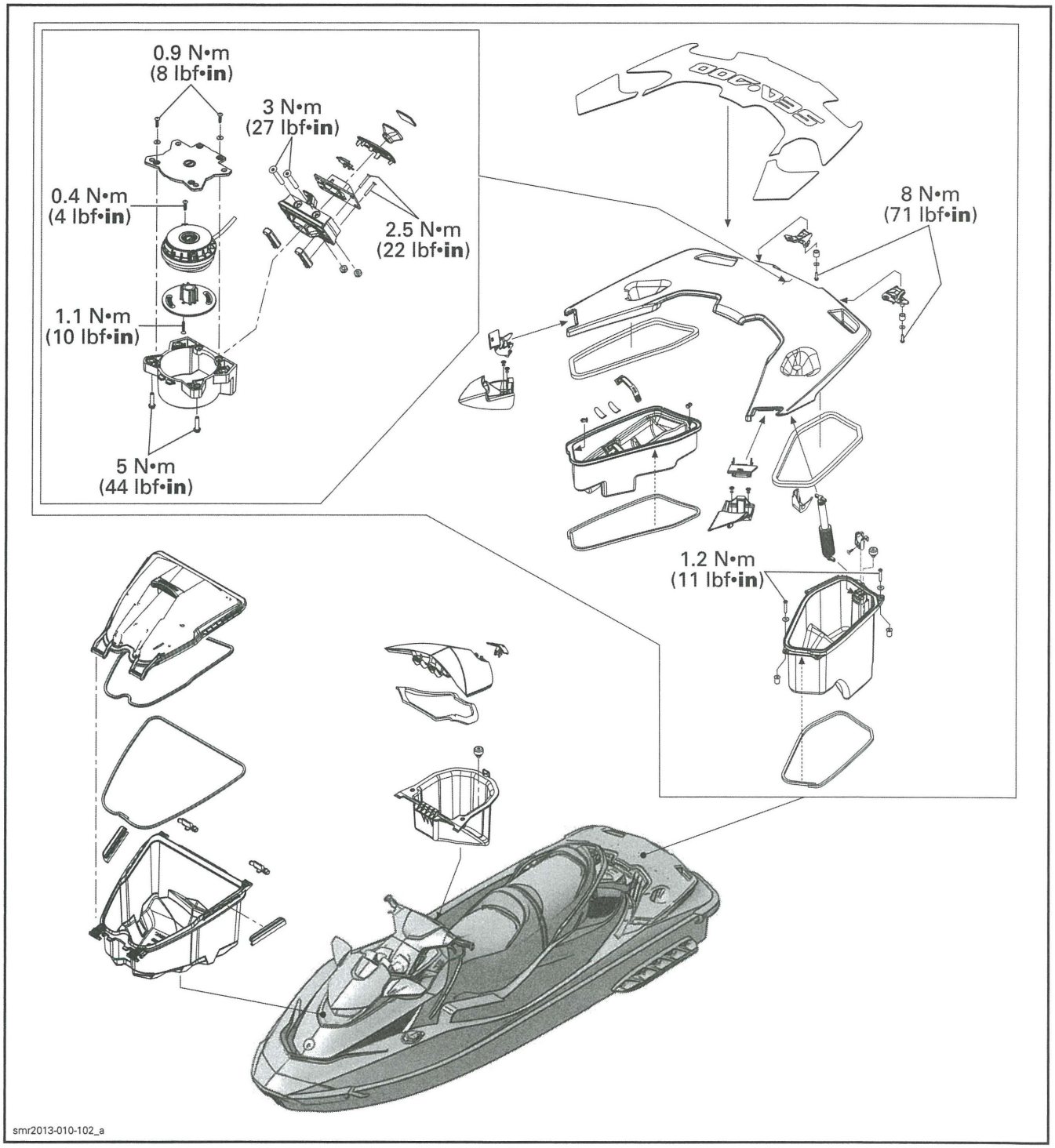

STORAGE COMPARTMENT (MODELS WITHOUT SUSPENSION)

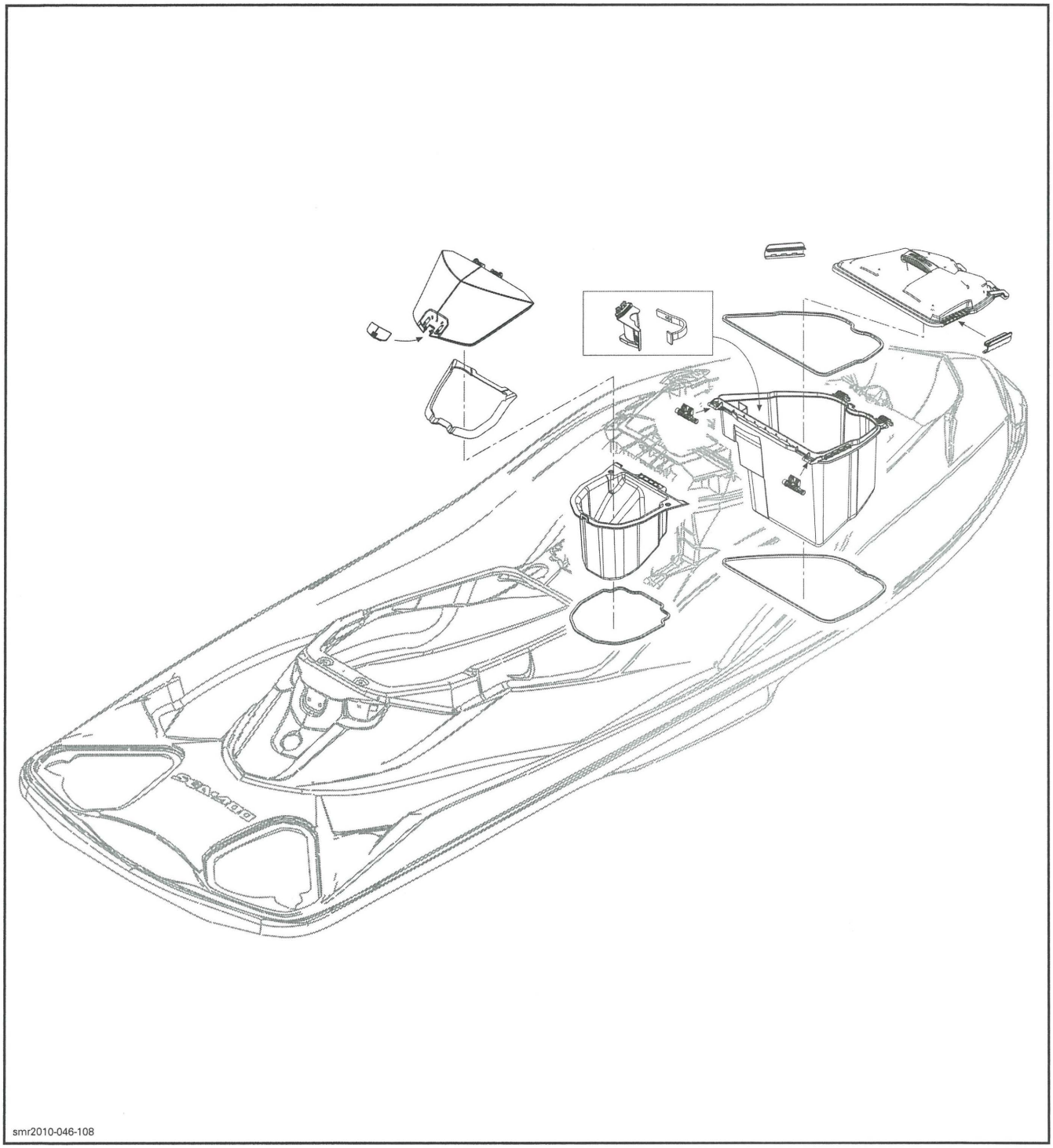

smr2010-046-108

VENTILATION (MODELS WITH SUSPENSION)

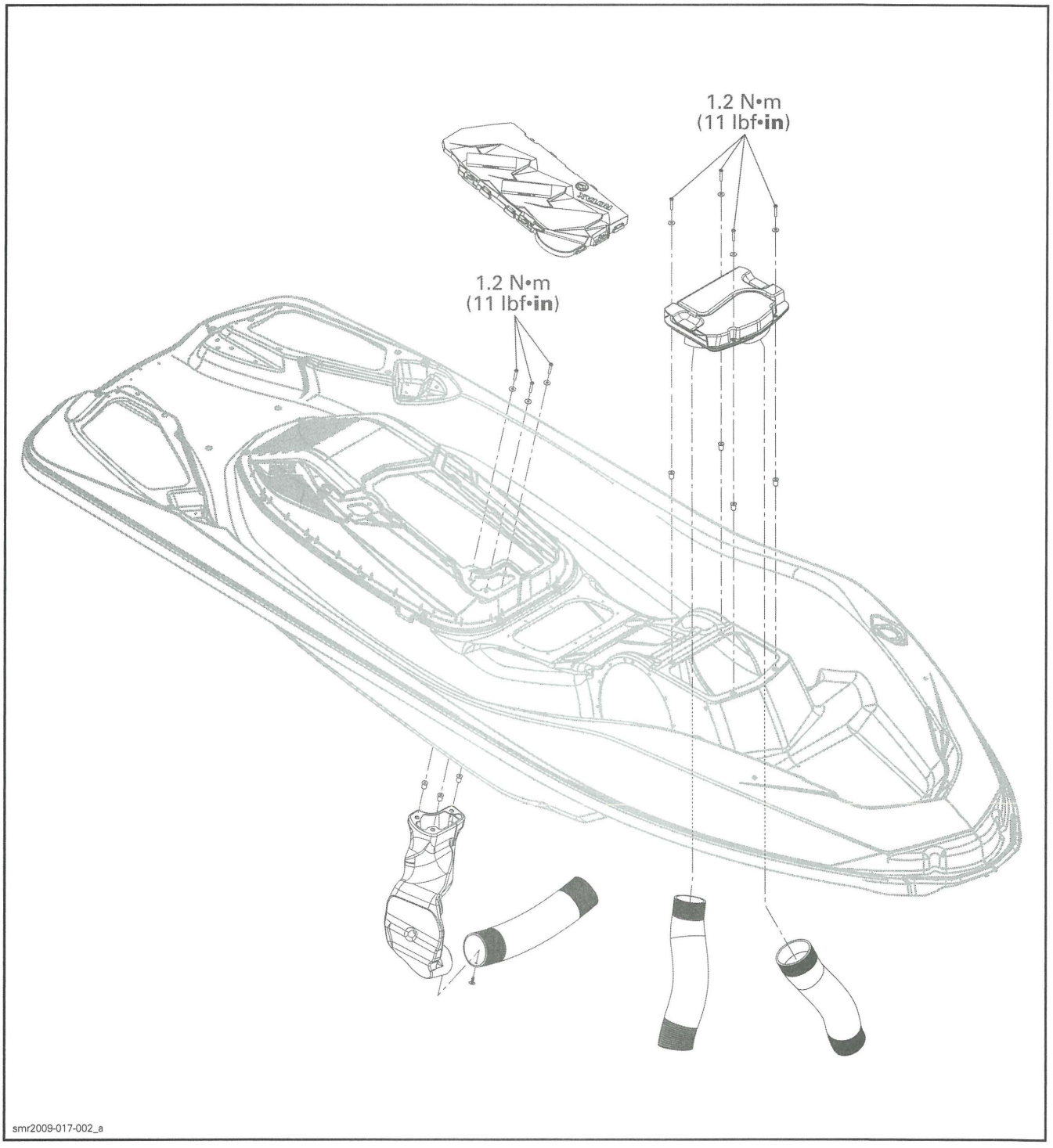

VENTILATION (MODELS WITHOUT SUSPENSION)

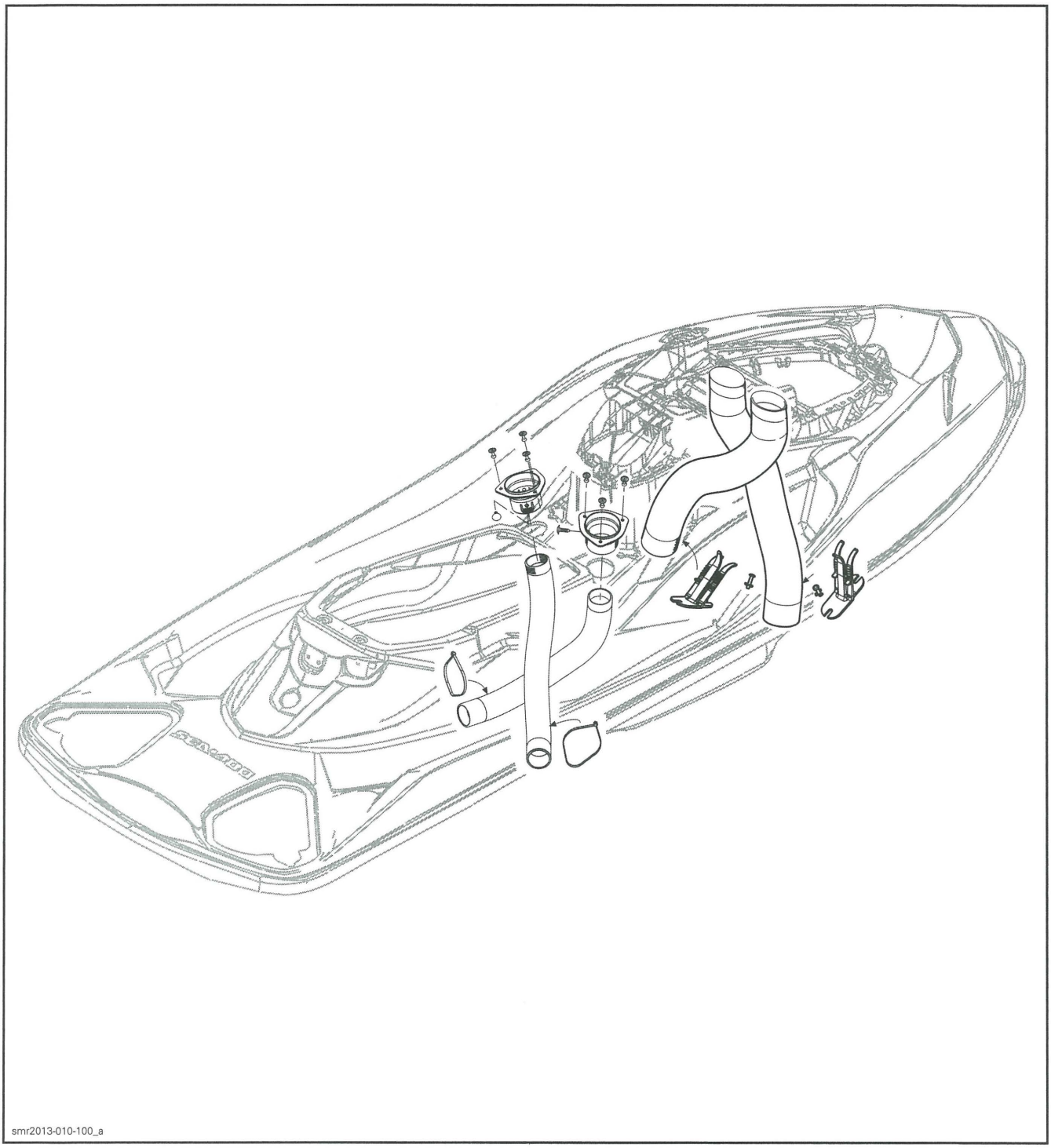

smr2013-010-100_a

FRONT COVER

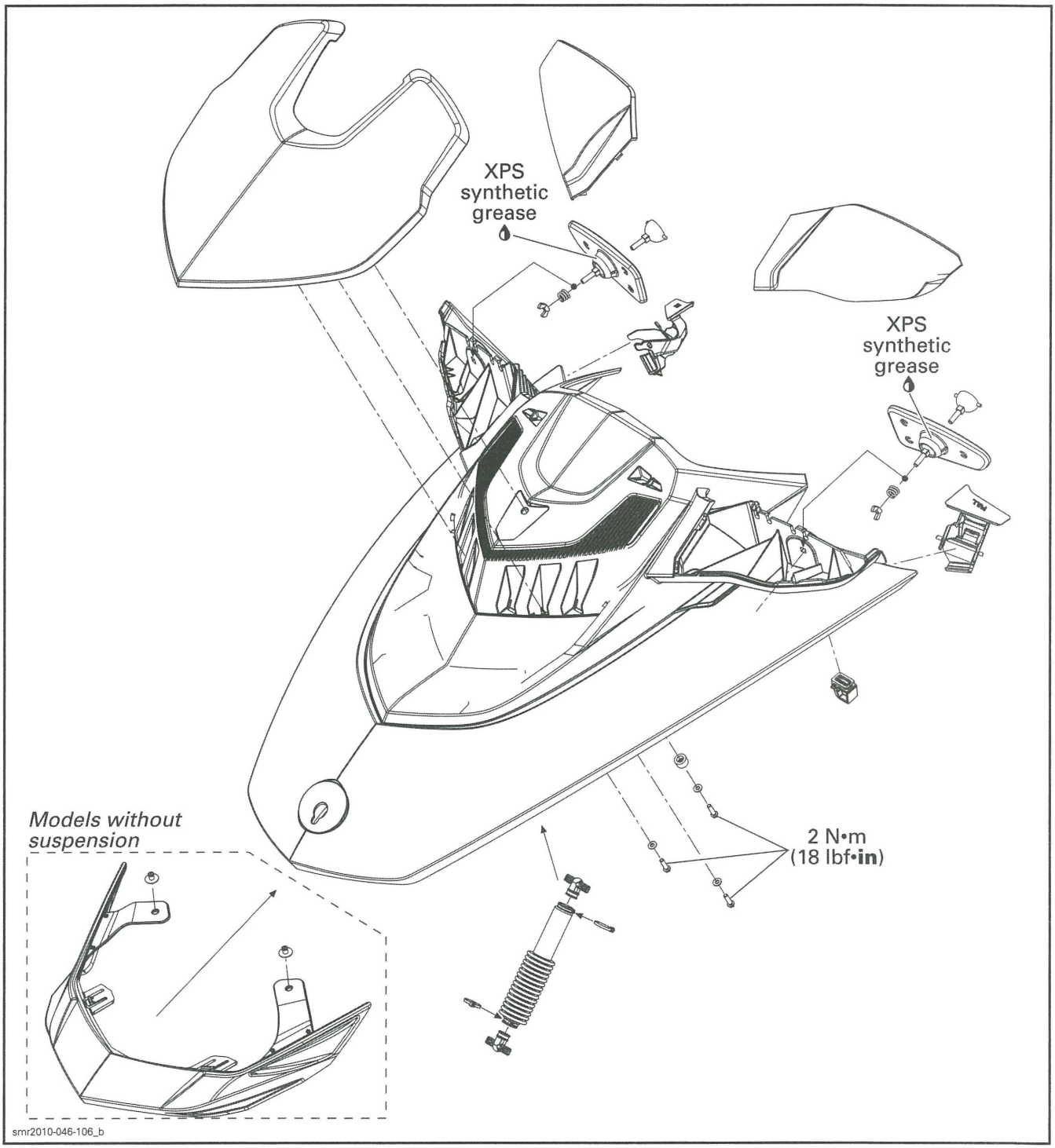
XPS synthetic grease
XPS synthetic grease
Models without suspension
2 N•m (18 lbf•in)
smr2010-046-106_b

SEAT

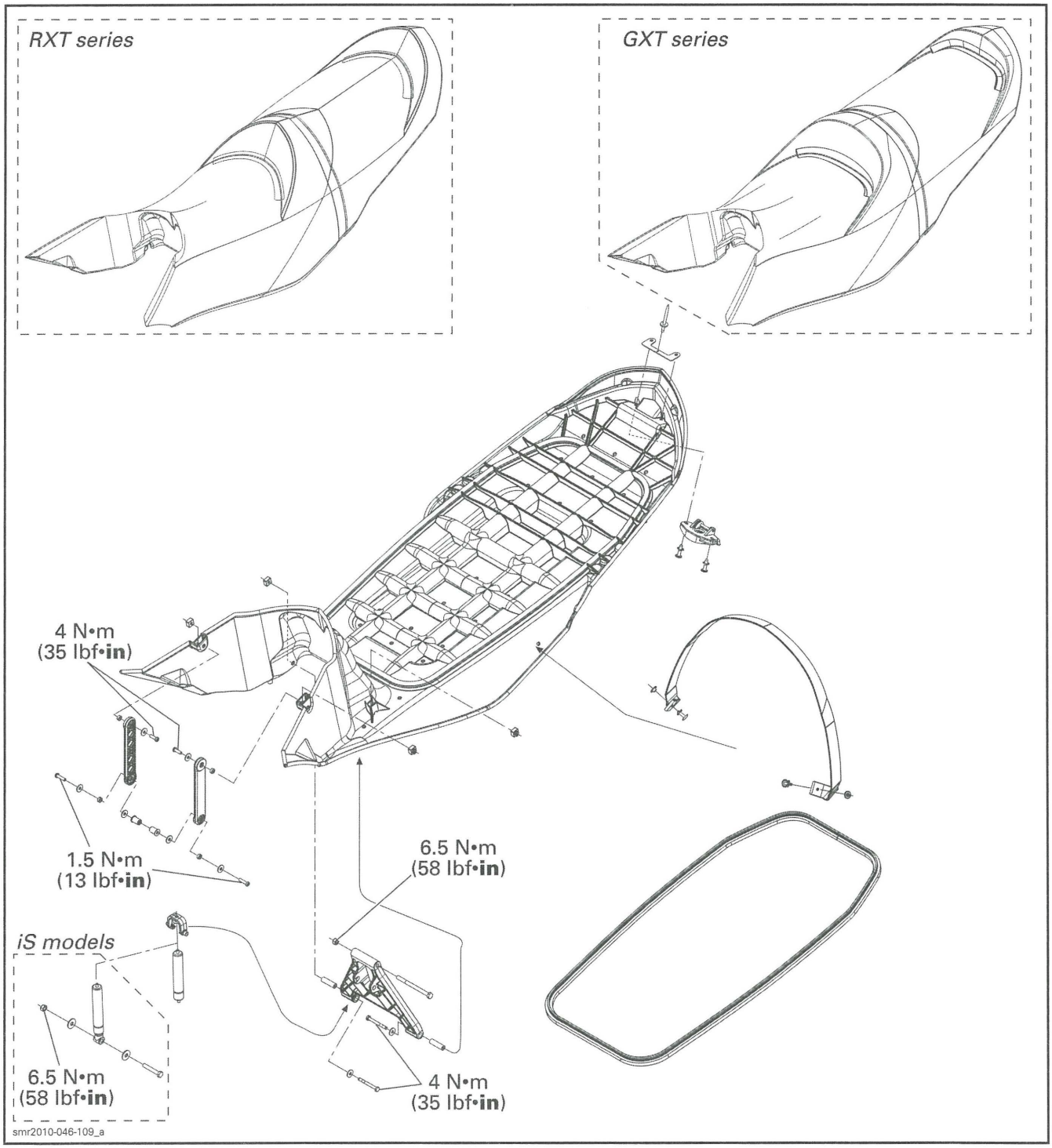
RXT series
GXT series
4 N•m
(35 lbf•in)
1.5 N•m
(13 lbf•in)
6.5 N•m
(58 lbf•in)
iS models
6.5 N•m
(58 lbf•in)
4 N•m
(35 lbf•in)
smr2010-046-109_a

WAKEBOARD RACK AND WAKE PYLON

Wake Pro

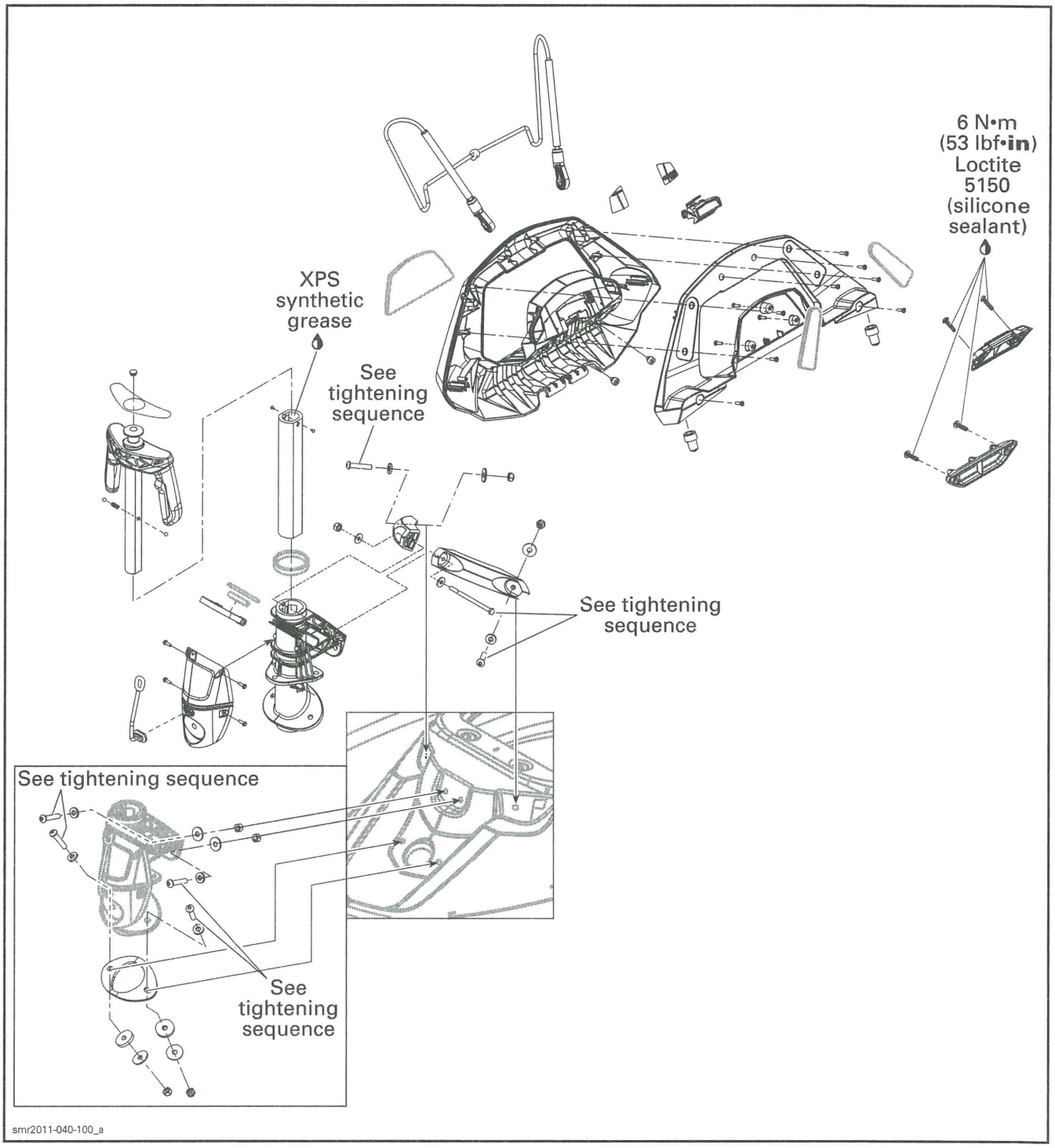

PROCEDURES

GELCOAT

The deck is constructed of chopped fiberglass, saturated with resin. It is sprayed on the layer of gelcoat along with pieces of fiberglass mat, cloth and woven roving which are added at required areas.

For the hull, a different material is used and a standard polyester based fiberglass repair kit **will not work**. Refer to *HULL* subsection for proper material and procedures.

Gelcoat Repair Information

All liquid gelcoat and repair kits can be purchased directly from Gelcote International Ltd. BRP does not distribute these products.

NOTE: Fiberglass repair kit is also available through automotive or marine suppliers.

Gelcote International Ltd web site has all the Sea-Doo personal watercraft and sport boat gelcoat colors.

You can order on the web site and get confirmation of your order within hours. Quick, reliable service is what is offered to all BRP dealers around the world.

There are many services on this web site to make your ordering quick and informative. Or you can call Gelcote International directly with any question pertaining to gelcoat. Service, value and knowledge is what you can expect when you call Gelcote International.

Gelcote International Ltd
174 Colonnade Road Suite 29
Ottawa, Ontario
Canada, K2E 7J5

Phone: (613) 225-2177
Phone: (877) 435-2683 (Toll Free)
Fax: (613) 225-5297

Web Site: www.gelcoat.ca
E-mail: info@gelcote.com

⚠ WARNING

Protect skin, wear gloves when in contact with resin, hardeners and gelcoat. A barrier skin cream may also be used. Do not expose area to open flame or lit cigarette. Some of the materials are flammable. Protect eyes, wear safety glasses when grinding, sanding or spraying. Use a dust mask when sanding or grinding. When spraying wear a respirator or paint mask. Always read warning labels on products.

TOOLS	
Air mask	Power sander
Buffing pda	Putty knife
Cover sheets	Safety glasses
Heavy-duty polisher	Sanding block
Paint brush	Scissors
Plastic container (mixing)	Spray gun
Plastic film	Stirring stick
Plastic squeegee	White cloths

MATERIALS	
Acetone	Epoxy filler
Cabosil	Masking tape
Cardboard	Liquid gelcoat
Fine compound (white)	Medium compound (white)
Fiberglass cloth	Polyester resin
Fiberglass mat	24-grit sanding disks
Gelcoat putty	Wax
Sandpaper (100-grit, 220-grit, 320-grit, 400-grit, 600-grit, 1000-grit)	

Air Bubbles Repair

Possible cause:

- Air pocket trapped between layers of laminate and gelcoat.

Preparation of Surface

Remove all of the damaged gelcoat surrounding the air bubble with a putty knife or preferably a carbide grinding tip. Make sure all loose and weak areas are completely removed. Sand a small area of the gelcoat surface with 220-grit sandpaper. If needed, sand the cavity itself. These areas must have a rough surface to allow the gelcoat putty to bond properly.

Filling the Cavity

The prepared surface must be cleaned with acetone on a cloth. Use a gelcoat repair kit. Follow the mixing instructions in the kit when preparing the gelcoat putty.

Carefully mix the required amount while making sure there are no air bubbles in the mixture. With a putty knife, fill the repair area and cover with plastic film. Curing time may depend on temperature, amount of putty and percentage of catalyst. After 2 hours, press lightly on the surface with fingers to test the hardness. When the area becomes hard, remove the plastic film.

Sanding

Begin block sanding the patch with 320-grit sandpaper until you come close to the original surface. Remove dust with a water soaked cloth and continue sanding with a 400-grit wet paper. Finish wet sanding with a 600-grit to remove deeper scratches. If needed you can wet sand with finer grit paper such as 1000-grit.

Buffing and Waxing

Buff the surface using a heavy duty polisher with a buffing pad. Make sure the pad is free of dirt or you may damage the gelcoat. Carefully begin buffing with a white medium compound. Finish off using a fine compound. While buffing, pay close attention to avoid overheating the surface.

Blisters Repair

Possible causes:

- Insert catalyst
- Improper catalyst/gelcoat ratio.

A blister is a visible bump on the watercraft surface that may not necessarily come right through the gelcoat layer. In the case of only a few blisters, follow the same repair procedure as for air bubbles. If they are numerous and in close concentration, spray liquid gelcoat to achieve proper repair. This procedure is covered in *MINOR GELCOAT FRACTURES*.

Minor Gelcoat Fractures Repair

Possible causes:

- Flexing of fiberglass laminate
- Gelcoat thickness
- Direct result of impact.

In case of fractures which have not penetrated past the gelcoat layer, the repair concerns the gelcoat only. If flex cracking or impact are evident, then additional reinforcement may be necessary. This subject will be covered in *COMPOUND FRACTURES*.

Preparing the Surface

Small Fractures: Open the cracks up with a sharp triangular can opener or preferably a carbide tipped die grinder. The V groove will provide a good bonding area for the gelcoat. With 220-grit sandpaper, sand the sides of the notched out areas.

Numerous Fractures: Using a grinder with a 24-grit disk, remove the gelcoat. Sand the area edge with 220-grit sandpaper.

Filling the Repair Area

Small Fractures: Refer to the same procedure as in the *AIR BUBBLES*.

Numerous Fractures Over Large Surface: Prepare the area for spray application of liquid gelcoat. Wipe down the surface with acetone. Mask the area off to protect the watercraft from overspray.

Mix the needed quantity of gelcoat and catalyst according to suppliers recommendations. The gelcoat can be thinned with acetone up to 10%. If it needs more consistency you can add cabosil.

Make sure that the air supply is free of oil, dirt and water.

Test spray the gelcoat mixture on paper to verify its consistency and pattern. You may have to apply 5 or 6 coats to cover the area properly. Overlap each coat further than the last, leaving at least 30 seconds between passes. Avoid trying to coat the surface with only a few heavy coats, this will not allow the gelcoat to dry properly.

Apply a coat of polyvinyl alcohol (PVA) to seal off the air and protect the gelcoat surface from dust. PVA speeds up the curing process because gelcoat will not cure properly when exposed to air.

Sanding

Wash the polyvinyl alcohol off with water. Depending on the size of the area repaired, you can either block sand as per previous procedure or you may use an air sander. Sand the surface down with progressively finer grits of sandpaper until the desired finish is achieved.

Buffing and Waxing

Buff the surface using a heavy duty polisher with a buffing pad. Make sure the pad is free of dirt or you may damage the gelcoat. Carefully begin

buffing with a white medium compound. Finish off using a fine compound. While buffing, pay close attention to avoid overheating the surface.

Compound Fractures Repair

Possible causes:

- Thickness of fiberglass laminate
- Direct result of impact.

Compound fractures are those that have gone past the gelcoated surface and in through the layers of fiberglass laminate. Two types of repairs have to be performed. The first is to restore the structural integrity of the damaged area. Fracture types can vary from a simple crack to a large hole. Usually, fiberglass reinforcement becomes necessary, especially if the fracture can be attributed to weakness. The final part of the repair is the gelcoating, which cannot be done until the interior and exterior laminate surfaces have been repaired.

Outside: Remove the damaged gelcoat and fiberglass with a 24-grit disk using a power sander. Grind outward at least 2 inches from the fracture to allow the patch to bond to strong material. Cut enough pieces of fiberglass mat necessary to build up the area. The pieces should be cut so they overlap each other by at least a half inch. For a smoother finish, the last layer should be fiberglass cloth. If the fracture is small enough all you may have to do is fill the area with an epoxy filler.

Inside: For the interior repair, you can grind more. This will allow for more fiberglass material which will strengthen the area. If the fracture opening is too large after surface preparation, you may need a backing support to cover the opening. Cut alternating pieces of fiberglass mat and cloth in overlapping sizes.

Patching the Repair Area

Outside: The outside should be done first. Wipe clean the area with acetone on a cloth, then mask off area. For a small crack use an epoxy filler in the same way you would use gelcoat repair putty. When laying up a larger area you will use mat, cloth and fiberglass resin and catalyst. Use a clean container to mix the resin, mix only what you will need. Follow the recommended catalyst ratio.

Using a clean paintbrush, brush the mixed resin on the surface. Place the smallest piece of mat over the fracture and then wet out the mat. Follow with the remaining pieces of mat and final layer of cloth. While wetting the pieces make sure you work the air bubbles out and saturate all the pieces evenly. Try to work quickly, you may only have 15 or 20 minutes. You may clean the brush with acetone.

Wait until the repair has hardened before moving on to the interior repair. If the size of the opening is too large for the pieces to maintain the proper shape, you will have to use a backing support. It is a shaped piece of cardboard that fits flush to the interior surface and has a plastic layer on the repair side. It is held in place by tape or a support.

Inside: Wipe down the area with acetone on a cloth. Apply the same procedure as for outside repair when laminating the alternating pieces of fiberglass material. If a backing support was used, remove it before starting the repair. After the area has hardened, remove sharp edges of material from surface. If required paint the surface.

Sanding

Outside: This surface will have to be prepared for application of gelcoat. The size of the area will determine the gelcoating procedure to be used. Refer to the *MINOR GELCOAT FRACTURES REPAIR*.

Buffing and Waxing

Refer to the *BUFFING AND WAXING* in *MINOR GELCOAT FRACTURES REPAIR*.

DECALS

Decal Removal

Using a heat gun warm up one end of decal for a few seconds until decal can roll off when rubbing with your finger.

NOTE: When heating near light surfaces, duct tape should be applied to protect the surface. Otherwise the light color could become a yellowish color.

Pull decal slowly and when necessary apply more heat to ease removal on the area that has to be peeled off.

If decal tears while pulling off, it has to be heated for a few seconds longer. If decal tends to stretch while pulling off, stop heating and wait a few seconds to let it cool, then peel it off.

Decal Installation (with a Protective Film on Back Side)

These decals usually contain written information (e.g.: warning) and are used on gelcoat or metal.

Using isopropyl alcohol, clean the surface and dry thoroughly.

Using a pencil and the decal as a template, mark the area where decal will be located.

Remove half of the decal back protective film and align decal with marks. Start sticking it from center and remove the other half of the film to stick it completely. Carefully squeegee decal beginning at center and working outward using, firm, short, overlapping strokes.

Decal Installation (with a Protective Film on Both Sides)

These decals usually contain graphics and are used on gelcoat or plastic.

Installation on Gelcoat

Using isopropyl alcohol, clean the surface and dry thoroughly.

Using a pencil and the decal as a template mark the area where decal will be located.

For better adhesion a dry application is recommended, however, to ease decal installation a mild solution of soapy water can be sprayed over surface where decal will be installed.

Remove back protective film from decal and align decal with marks. When well aligned squeegee decal beginning at center and working outward using firm, short, overlapping strokes.

Remove front protective film once decal has adhered to hull.

Installation on Plastic Surface (Storage Cover)

Clean surface with isopropyl alcohol and dry thoroughly.

Using a pencil and the decal as a template, mark the area where decal will be located.

NOTICE Do not use soapy water to locate decal on plastic parts.

Remove back protective film from decal and carefully align decal with marks. When well aligned squeegee decal beginning at center and working outward using firm, short, overlapping strokes.

Remove front protective film once decal has adhered.

CARPETS

Carpet Cleaning

To clean the carpets, use 3M™ Citrus Base Cleaner or the equivalent. See the manufacturer's instructions.

Carpet Removal

Unstick a carpet corner.

Pull carpet vigorously to remove the carpet and its glue from body.

To remove the remaining glue from body, use a plastic or rubber spatula. Scrape remaining glue with spatula.

NOTE: Do not use any products (alcohol, acetone, thinner, etc.) or heat the remaining carpet glue. Chemical reactions make glue very hard to remove.

Carpet Installation

Clean body surface with isopropyl alcohol and dry thoroughly.

Install new carpet.

STORAGE COMPARTMENT COVER

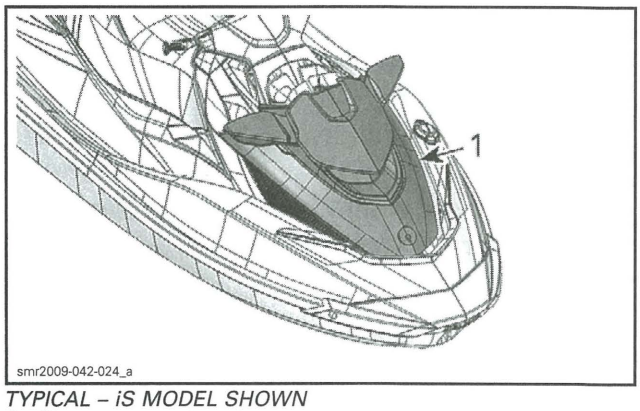

TYPICAL – iS MODEL SHOWN
1. Storage compartment cover

Storage Compartment Cover Removal

1. Open cover.
2. Cut locking tie retaining the bellows of gas shock.

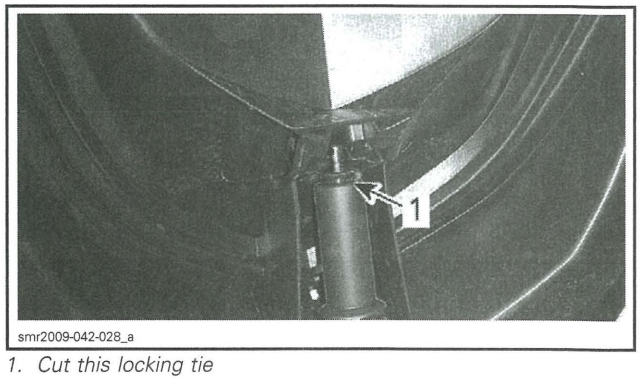

1. Cut this locking tie

3. Move bellows downward.

4. Unscrew gas shock from its upper attachment.
5. Remove gas shock from vehicle.
6. Open cover completely.
7. Align cover hinge keys with front body module slots.
8. Pull up cover to remove it.

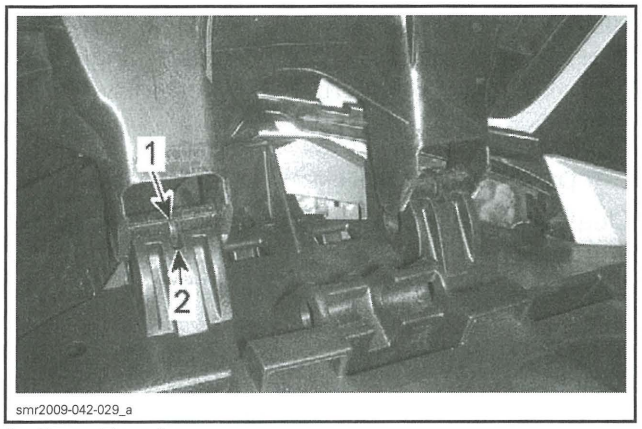

1. Cover hinge key
2. Front body module slot

Storage Compartment Cover Installation

The installation is the reverse of the removal procedure. However, pay attention to the following.

Remove gas shock attachment from cover.

Apply LOCTITE 414 (P/N 413 705 800) on threads of shock absorber body.

Tighten manually the attachment on gas shock.

Install the bellows and secure it using a locking tie.

Install the gas shock on cover.

NOTE: The corrugated section of bellows must point downward.

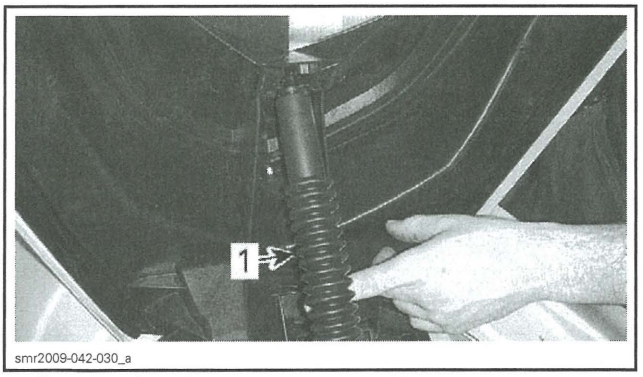

1. Corrugated section

Install cover on vehicle.

NOTICE **Make sure to insert cover hinges completely. A click must be heard to indicate complete insertion.**

Position the gas shock lower attachment on cavity opening.

NOTICE **To avoid breaking the attachment, do not force to insert it in cavity.**

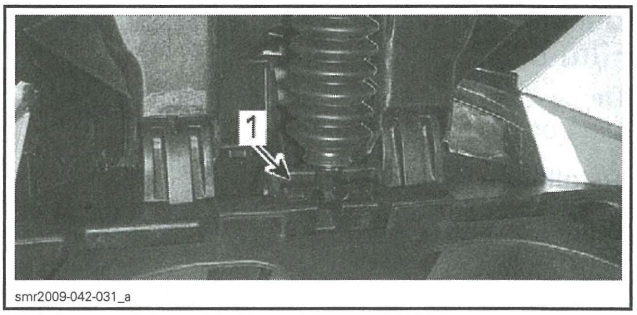

1. Lower attachment in its cavity

Close cover to lock the bottom of the gas shock.

GLOVE BOX COVER

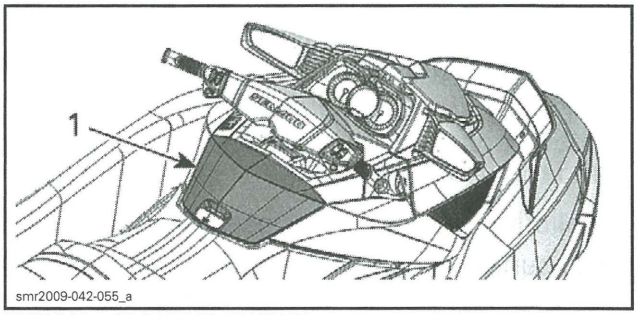

TYPICAL – iS MODEL SHOWN
1. Glove box cover

Glove Box Cover Removal

1. Move steering in its upper position.
2. Open glove box cover until cover hinges are aligned with front body module openings.

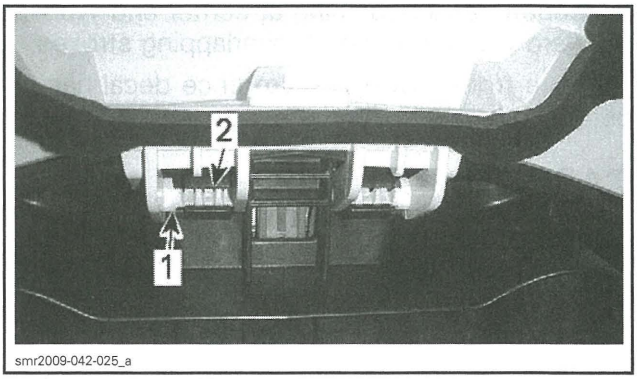

1. Glove box cover hinge
2. Front body module opening

3. Pull the bottom of cover gently to release hinges.

Glove Box Cover Installation

Reverse the removal procedure.

SEAT

Seat Removal

1. Open seat.
2. Attach the seat to support it during removal.
3. Remove Allen socket screw retaining the lateral arm to moving deck (one each side).

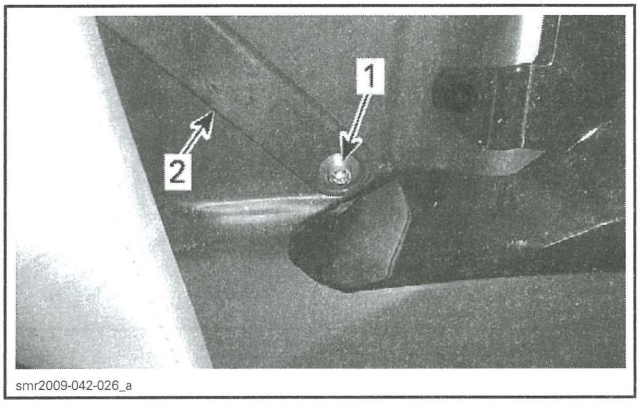

1. Allen socket screw
2. RH lateral arm

4. Remove bolts securing the central arm to seat.

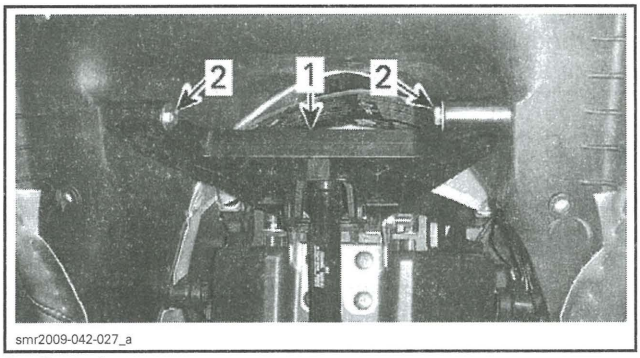

1. Central arm
2. Retaining bolts

5. Remove seat from vehicle.

Seat Installation

The installation is the reverse of the removal procedure. However, pay attention to the following.

Install seat to central arm.

Tighten seat retaining bolts to specification.

SEAT RETAINING BOLTS TORQUE
4 N•m (35 lbf•**in**)

Secure lateral arms to moving deck. Install parts as shown.

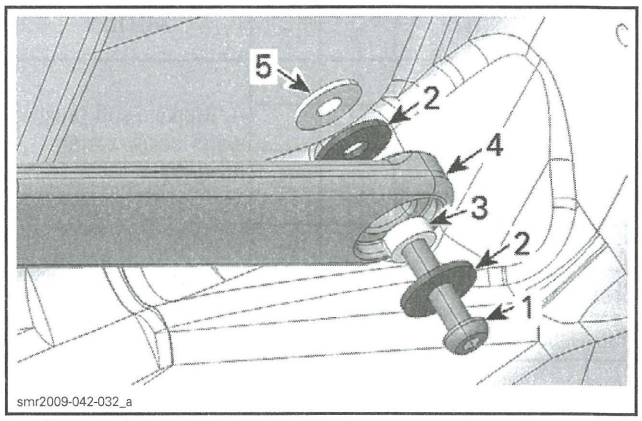

1. Allen socket screw
2. Stainless steel flat washers
3. Sleeve
4. RH lateral arm
5. Rubber grommet in moving deck

Tighten lateral arm screws to specification.

LATERAL ARM SCREWS TORQUE
1.5 N•m (13 lbf•**in**)

NOTICE **Do not tighten screws over this recommended torque. Otherwise, the rubber grommet could turns and screw will be hard to remove.**

Seat Cleaning

For general purpose cleaning, use XPS MULTI-PURPOSE CLEANER (P/N 219 701 709), Vinyl Finish Vinyl Cleaner, Fantastik or warm water with a mild dish soap such as Dawn or Ivory. Gently scrub with a small soft bristle brush.

For dirt build-up, use XPS MULTI-PURPOSE CLEANER (P/N 219 701 709), Vinyl Finish Vinyl Cleaner or an equivalent. Let soak for approximately 10 minutes, then gently scrub with a soft bristle brush. For specific stain removal, refer to your cleaning and care card.

Do not use any silicone-based protectants. They will extract the plasticizers, leaving the vinyl hard and brittle, and eventually cracking will occur.

RECOMMENDED PRODUCTS
1. XPS MULTI-PURPOSE CLEANER (P/N 219 701 709)
2. Dish Soap (Dawn or Ivory)
3. Fantastik
4. 3M Citrus Cleaner
5. 303 Protectant

Vinyl Cleaning Recommendations for Special Stains

TYPE OF STAIN	STEP 1	STEP 2	STEP 3	ACTION
Ballpoint ink*	E	B	A	
Chewing gum	D	A	—	A. Medium-soft brush, warm soapy water, rinse/dry.
Coffee, tea, chocolate	B	—	—	
Pen	D	B	—	
Grease	D	B	—	B. Vinyl Finish Cleaner, rinse/dry.
Household soil	A	B	—	
Ketchup	A	B	—	
Latex paint	A	B	—	C. One (1) tablespoon of ammonia, one-fourth (1/4) cup of hydrogen peroxide, three-fourth (3/4) cup of water, rinse/dry.
Lipstick	A	B	—	
Mildew or wet leaves*	C	B	A	
Motor oil	B	—	—	
Oil-based paint	D	B	—	
Permanent marker*	E	B	C	D. Wipe or scrape off excess (chill gum with ice before hand).
Spray paint	B	B	—	
Suntan lotion	A	B	—	
Tar/asphalt	D	B	—	E. Denatured alcohol, rinse/dry.
Yellow mustard	A	B	C	
*Suntan lotion, tree pollen, wet leaves and some other products can contain dyes that stain permanently.				

All cleaning methods must be followed by a thorough rinse with warm water.

Certain household cleaners, powdered abrasives, steel wool and industrial cleaners can cause damage and discoloration and are not recommended. Dry cleaning fluids and lacquer solvents should not be used as they will remove printed pattern and gloss. Waxes should be used with caution as many contain dyes or solvents that can permanently damage the protective coating.

SEAT LATCH

Seat Latch Adjustment

NOTE: Apply LOCTITE 243 (BLUE) (P/N 293 800 060) on threads of lock pin when the adjustment is required or when the lock pin is removed. If a new lock pin is used, it is already coat with a threadlocker.

1. Loosen adjustment nut.
2. Adjust lock pin height. Do not torque yet.
3. Position the lock pin longitudinally into the rear handle slot.
4. Hold the lock pin in this position and tighten adjustment nut to specification.

SEAT LATCH ADJUSTMENT NUT TORQUE
8 N•m (71 lbf•**in**)

5. Close the seat and readjust as required.

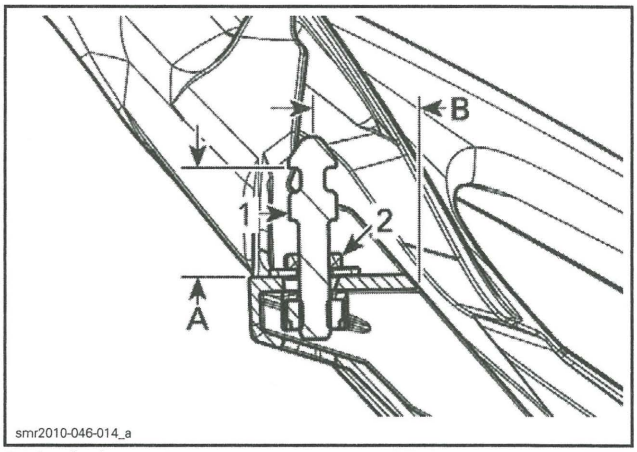

1. Lock pin
2. Adjustment nut

MODEL	MEASURE A	MEASURE B
iS and aS Models	32.4 mm ± 1.0 mm (1.276 in ± .039 in)	34.4 mm ± 1.0 mm (1.354 in ± .039 in)
Models without iS or aS	36.4 mm ± 1.0 mm (1.433 in ± .039 in)	

MIRRORS

Mirror Replacement

1. Remove mirror trim as follows.
   1.1 Using a small screwdriver, unlock both front tabs securing the front of mirror trim.
   1.2 Tilt the trim forward and remove it.

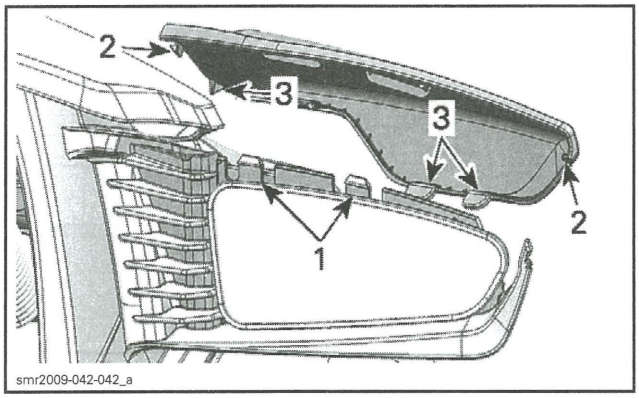

1. *Front retaining tabs*
2. *Side retaining tabs*
3. *Locating tabs*

2. Remove nut and spring securing mirror.

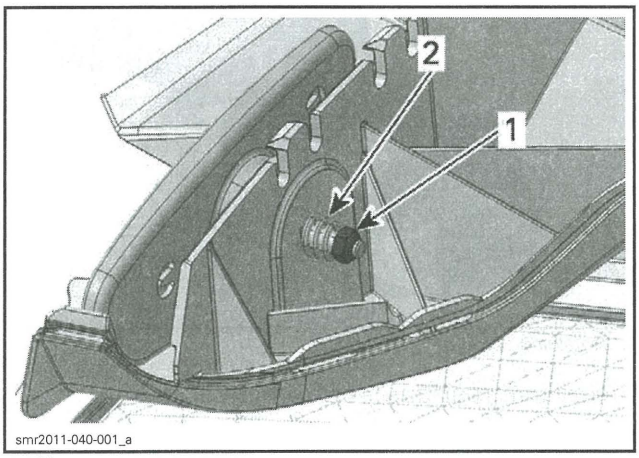

1. *Nut*
2. *Spring*

3. Install the new mirror and tighten nut to specification.

MIRROR SPRING LENGTH SPECIFICATION
10 mm to 12 mm (13/32 in to 15/32 in)

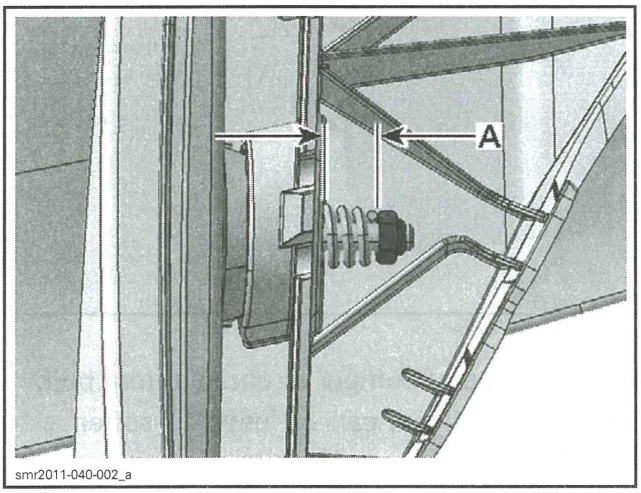

A. 10 mm to 12 mm (13/32 in to 15/32 in)

4. Install mirror trim as follows.
   4.1 Install the front locating tabs.

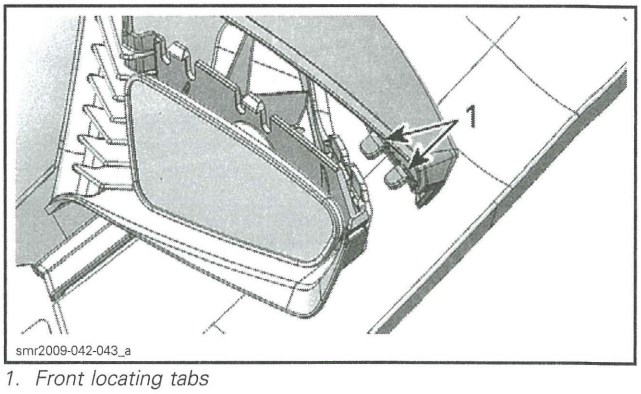

1. *Front locating tabs*

   4.2 Lower rear part of trim.
   4.3 Lift up the rear edge and press the center of trim to position retainers over front retaining tabs.

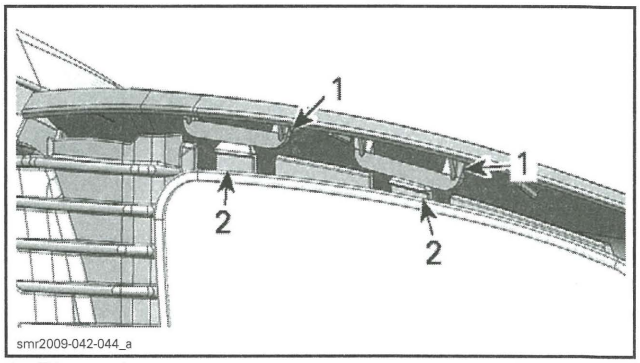

1. *Trim retainers*
2. *Retaining tabs*

BUMPERS

Bumper Removal

Front Bumper

1. Remove both protective caps.

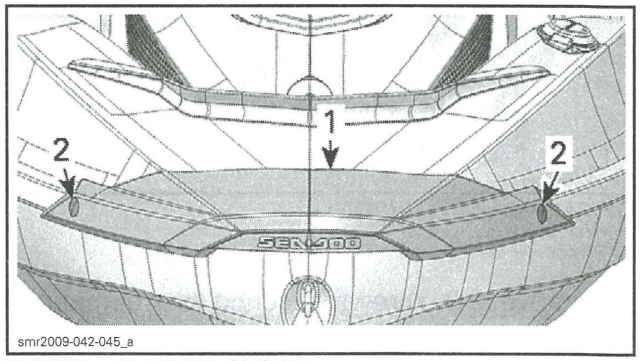

TYPICAL – iS MODEL SHOWN
1. *Front bumper*
2. *Protective caps*

2. Remove side screws securing front bumper to body.

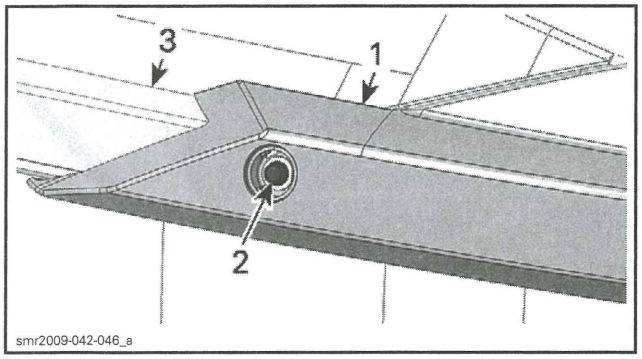

FROM RH SIDE OF VEHICLE
1. *Front bumper*
2. *Retaining screw*
3. *Side bumper*

3. Remove screws located under front bumper.

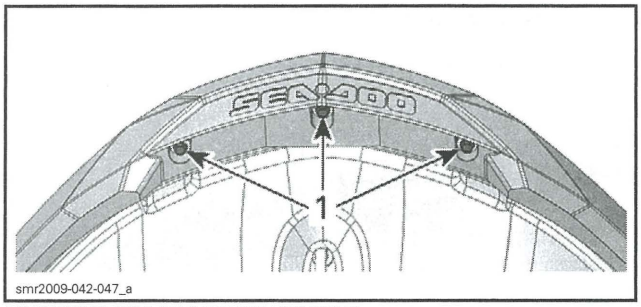

UNDERNEATH FRONT OF VEHICLE
1. *Retaining screws*

4. Remove front bumper from vehicle.

Rear Bumper

1. Remove both protective caps (one on each side).

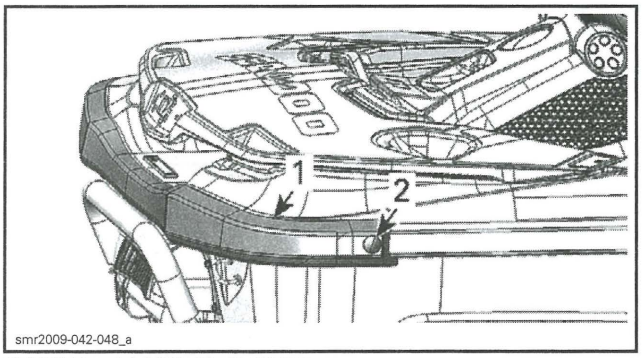

TYPICAL – iS MODEL SHOWN
1. *Rear bumper*
2. *Protective cap*

2. Remove side screws securing rear bumper to body.

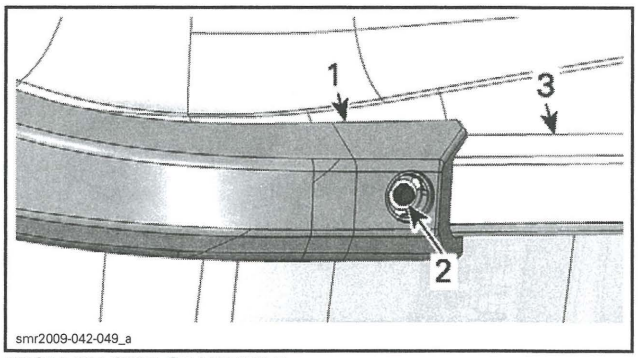

FROM RH SIDE OF VEHICLE
1. *Rear bumper*
2. *Retaining screw*
3. *Side bumper*

3. Remove screws located under rear bumper.

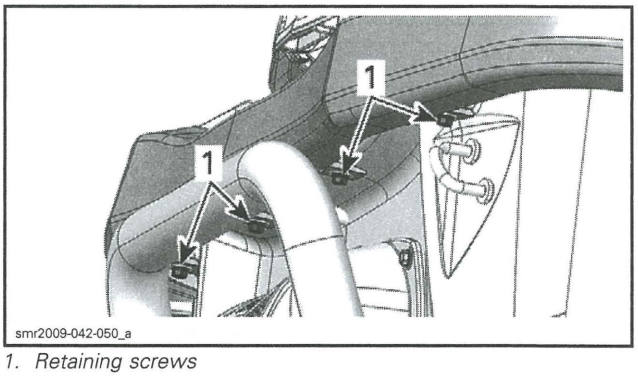

1. *Retaining screws*

4. Remove rear bumper from vehicle.

Side Bumpers

1. Remove front and rear bumpers.
2. Using a marker, trace a line at bumper end.

NOTE: These marks will be used during installation.

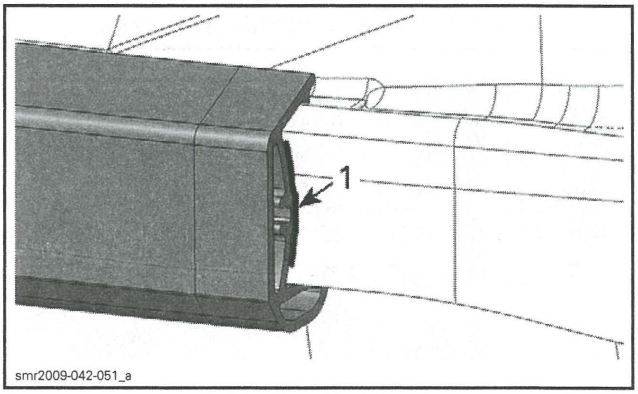

1. *Trace a line here*

3. Pull the top of bumper to unclip it from body.

NOTE: A heat gun can be used to soften side bumper.

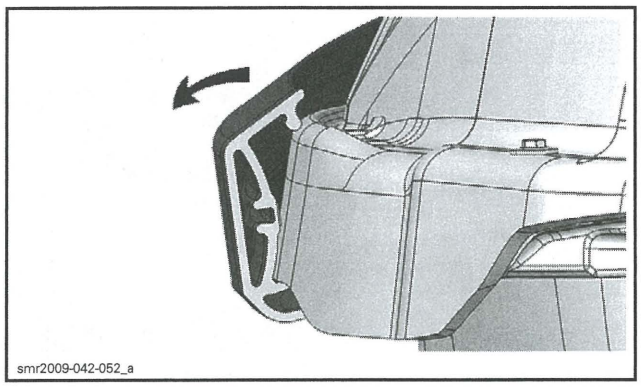
smr2009-042-052_a

Bumper Installation

Front and Rear Bumper

The installation is the reverse of the removal procedure.

Tighten bumper screws to specification.

BUMPER SCREWS TORQUE
4.5 N•m (40 lbf•**in**)

Side Bumpers

1. Remove all remaining residues of the mounting tape.
2. Clean bumper area using isopropyl alcohol.
3. Remove the protective skin on mounting tape.

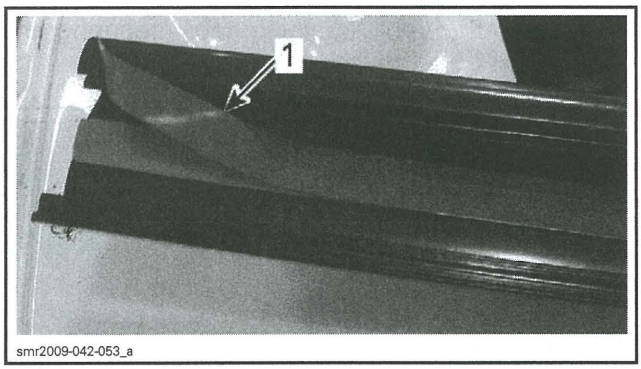

smr2009-042-053_a

1. Protective skin

4. Insert bumper over body lip.
   - 4.1 Insert lower section first.
   - 4.2 Insert upper section last.

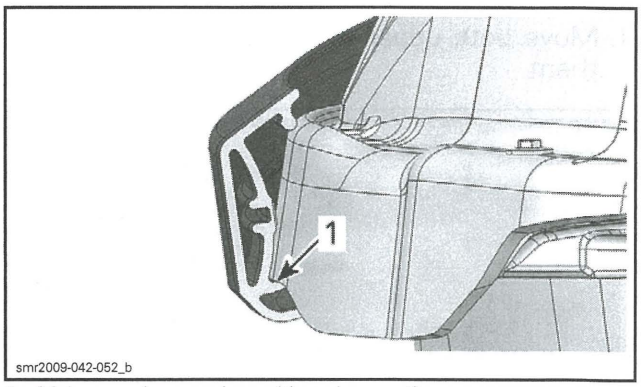

smr2009-042-052_b

1. Make sure bumper is positioned correctly

NOTE: A heat gun can be used to soften side bumper.

BODY COVER

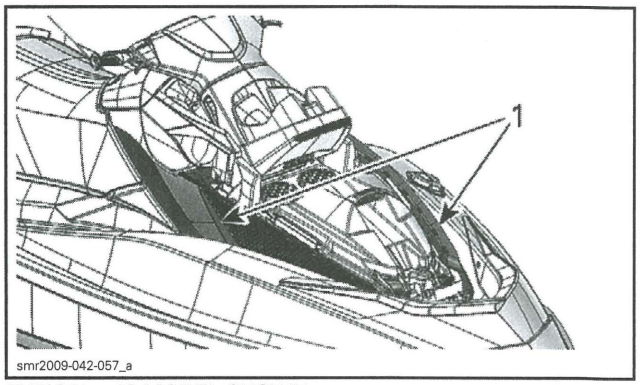

smr2009-042-057_a

TYPICAL – iS MODEL SHOWN
1. Body covers

Body Cover Removal

1. Remove the *STORAGE COMPARTMENT COVER*, see procedure in this subsection.
2. Remove the *FRONT GRILLE*, see procedure in this subsection.
3. Remove the plastic push-in clip securing the upper trim.

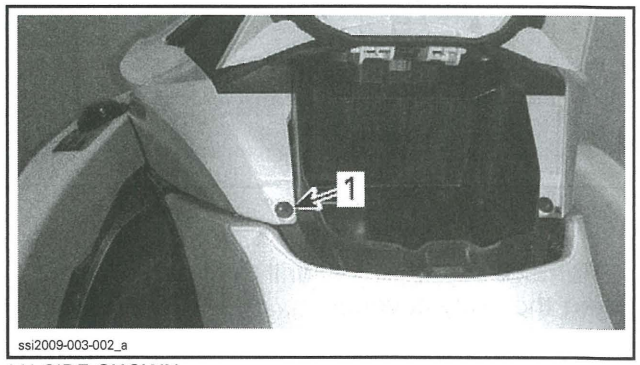

ssi2009-003-002_a

LH SIDE SHOWN
1. Remove this plastic push-in clip

4. Move both upper trims rearward and remove them.

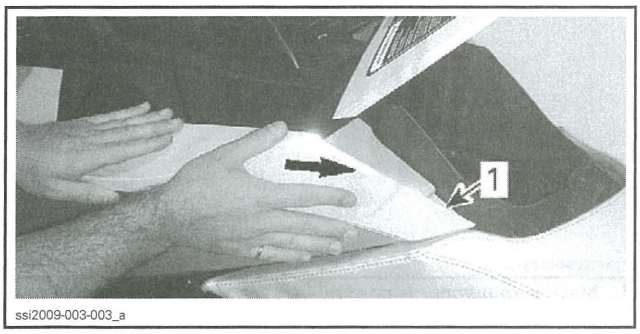

LH SIDE SHOWN
1. LH upper trim

5. Remove the plastic push-in clips retaining the LH and RH trims.

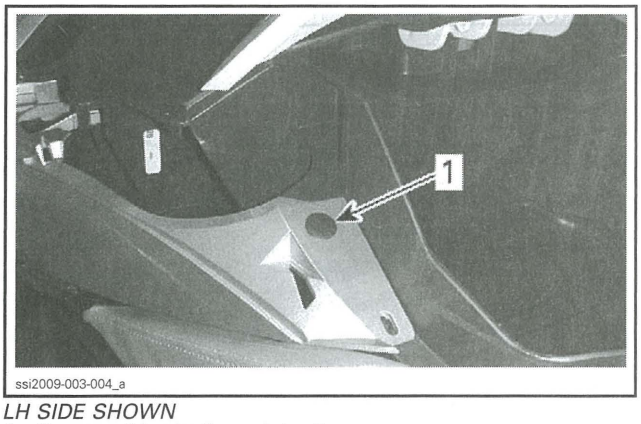

LH SIDE SHOWN
1. Remove this plastic push-in clip

6. Open seat and using a 3/16" drill bit, drill the rivets securing the seat trims.

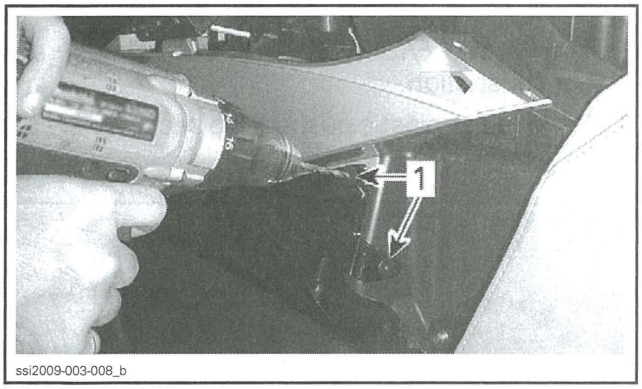

LH SIDE SHOWN
1. Remove these rivets

7. Remove seat trim and drill the front rivet securing the body cover.
8. At the front of front body module, remove screws or rivets retaining both body cover.
9. Unlock rear and center retaining tabs.

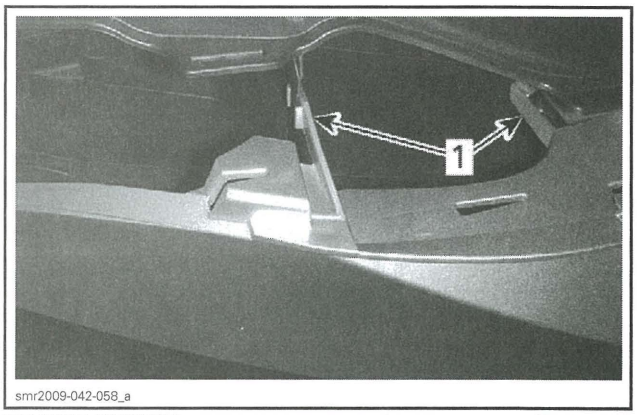

RH SIDE SHOWN
1. Rear retaining tabs

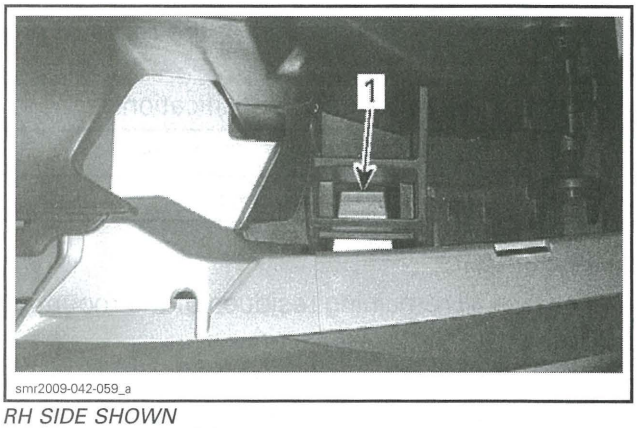

RH SIDE SHOWN
1. Center retaining tab

10. Unlock the four retaining tabs securing the front of body cover.

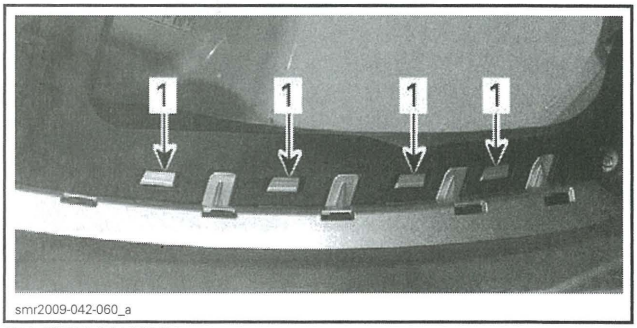

RH SIDE SHOWN
1. Front retaining tab

11. Remove body covers.

Body Cover Installation

The installation is the reverse of the removal procedure.

FRONT BODY MODULE

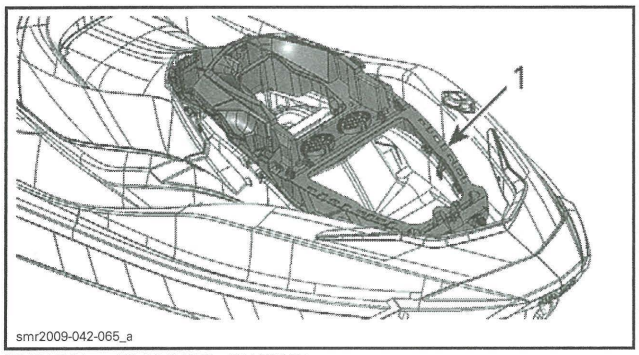

TYPICAL – iS MODEL SHOWN
1. Front body module

Front Body Module Removal

1. Refer to appropriate procedures and remove the following parts:
   - Storage compartment cover
   - Storage bin
   - Glove box cover
   - Body covers and front grille
   - Steering and steering lock
   - Speed-Tie unit (if equipped).
2. Remove both screws and washers located between seat and glove box.

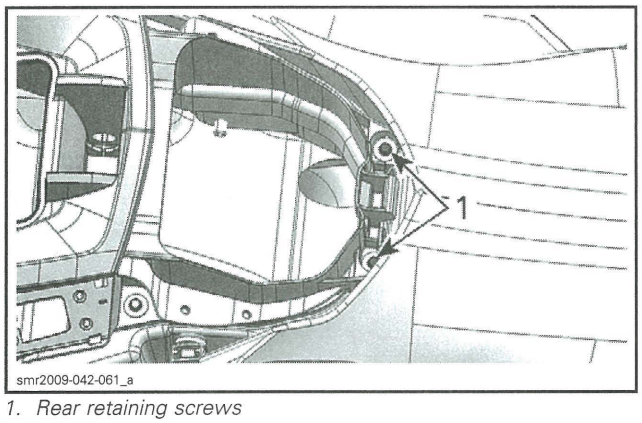

1. Rear retaining screws

3. On each side of front body module, remove both retaining screws.

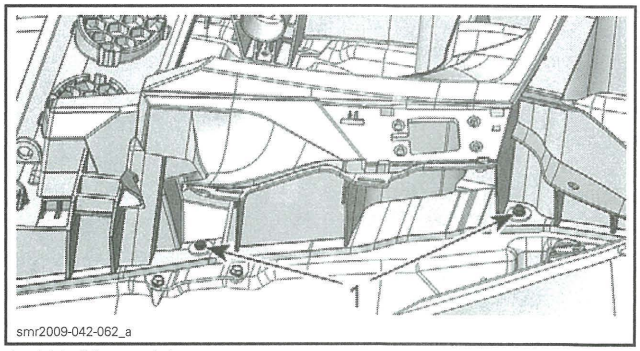

1. LH side retaining screws

4. At the front of body module, remove screws.

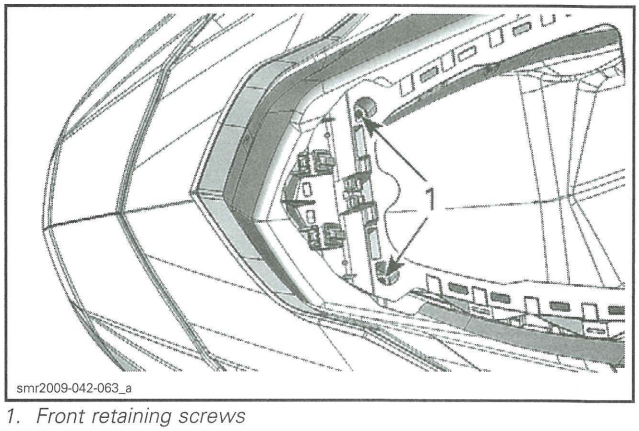

1. Front retaining screws

5. Unlock retaining tabs.

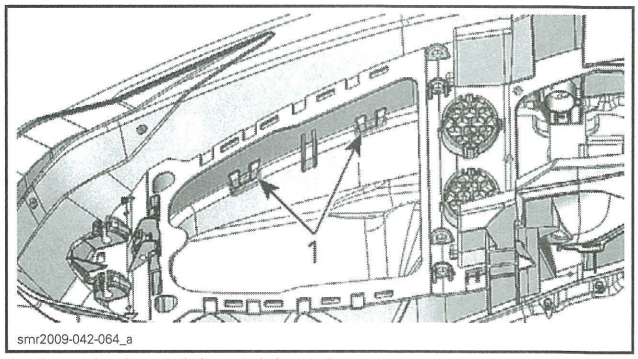

1. Front body module retaining tabs

6. Remove front body module.

Front Body Module Installation

The installation is the reverse of the removal procedure.

SPEED-TIE UNIT

Front Speed-Tie Unit Removal

1. Open the glove box.
2. Remove the plastic push-in clip securing the LH upper trim.

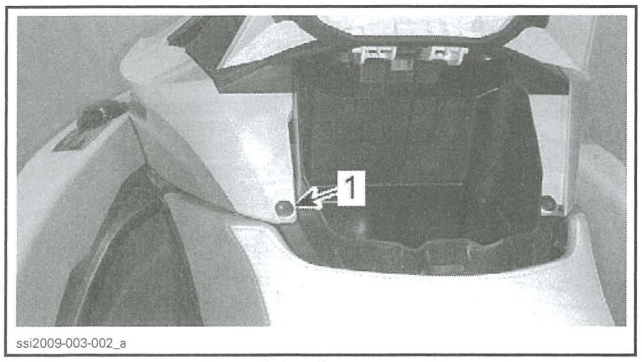

1. Remove this plastic push-in clip

3. Move upper trim rearward and remove it.

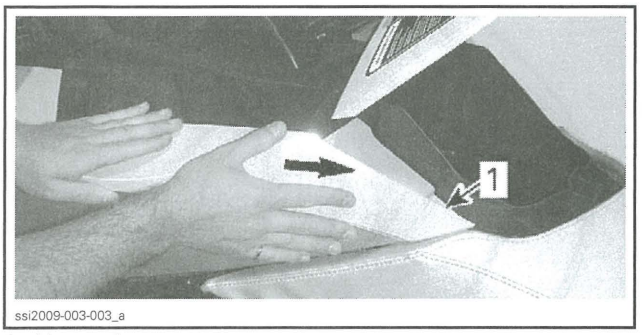

1. Upper trim

4. Remove the plastic push-in clip retaining the LH trim.

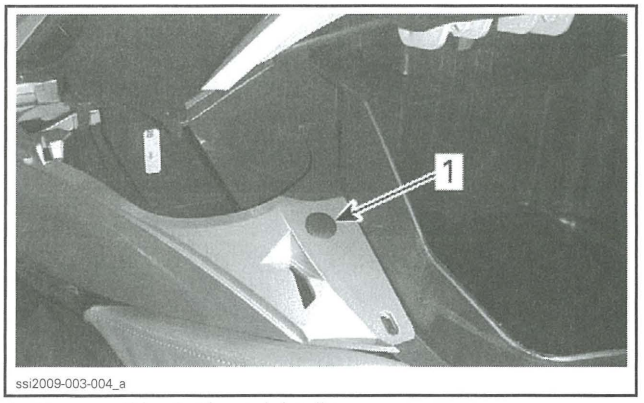

1. Remove this plastic push-in clip

5. Open seat.
6. Drill rivet securing the LH body cover and the seat trim.

REQUIRED TOOL
SUPERTANIUM DRILL BIT 3/16" (P/N 529 031 800)

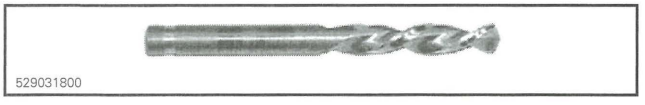

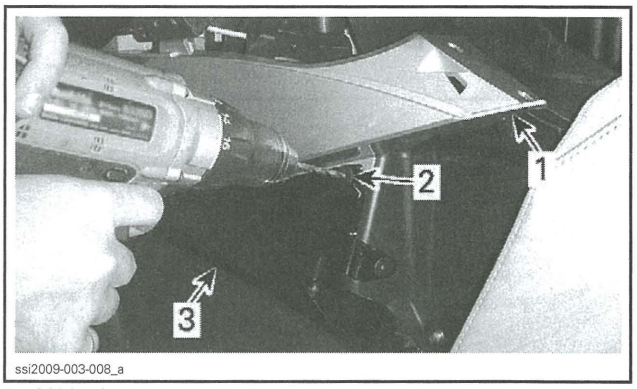

1. LH body cover
2. Remove this rivet
3. Seat trim

7. Remove front trim by releasing both retaining tabs.

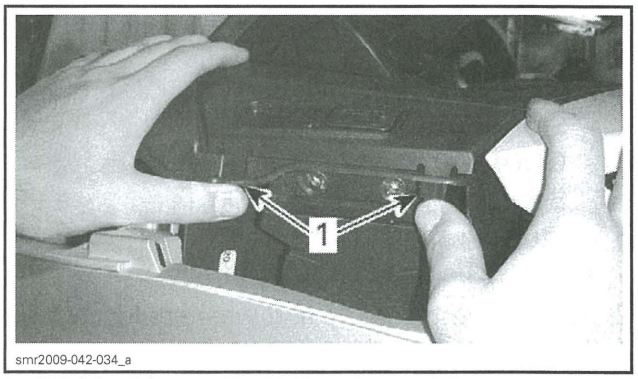

1. Retaining tabs

8. Using a small screwdriver, release both retaining hooks securing the cam trim on locking mechanism.

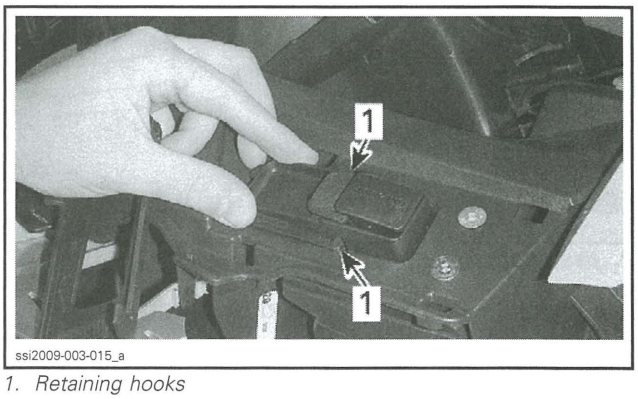

1. Retaining hooks

9. Remove screws retaining the Speed-Tie unit.
10. Position the reel of Speed-Tie unit to the bottom of its cavity.
11. Remove the locking mechanism from vehicle.
12. Open storage cover and unlock the front tab securing the LH trim.

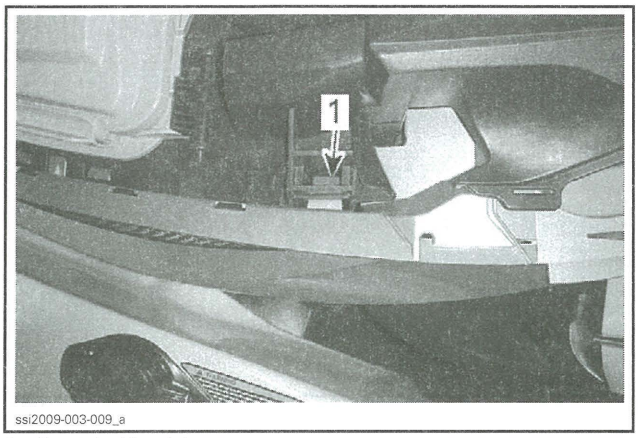

1. Front locking tab

13. Unlatch the rear tab.

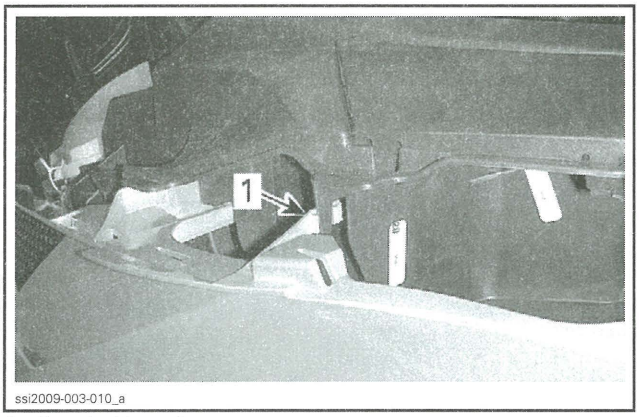

1. Rear locking tab

14. Slightly pull the top of LH trim and remove the reel of the Speed-Tie unit from its location as shown.

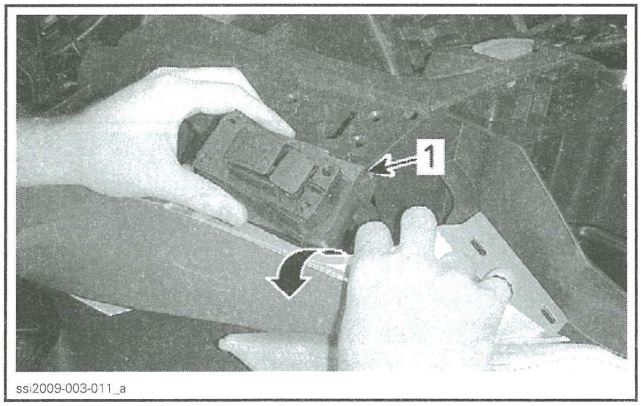

1. Speed-Tie unit reel

NOTICE During Speed-Tie unit removal, be careful not to damage the LH trim.

Rear Speed-Tie Unit Removal

iS and aS Models

1. Remove screws securing the Speed-Tie unit to the boarding platform.
2. Remove rear trim by releasing retaining tabs.

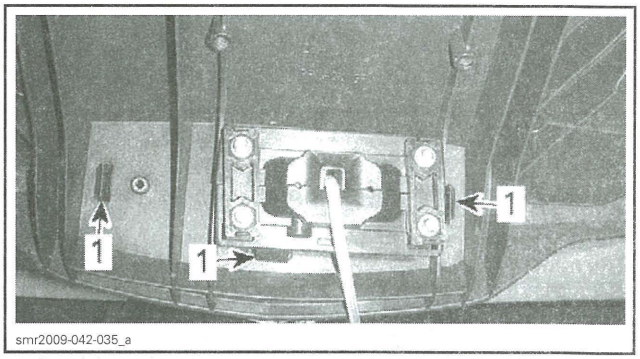

1. Retaining tabs

3. Remove screws securing the locking mechanism to the boarding platform.

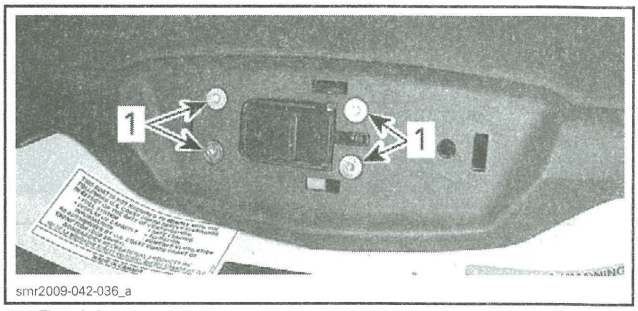

1. Retaining screws

4. Remove the Speed-Tie unit from vehicle.

Models Without iS or aS

1. Remove both access covers.
2. From underneath deck, remove screws retaining the Speed-Tie cover.
3. Remove bolts securing the Speed-Tie unit to deck.

Front Speed-Tie Unit Installation

1. Ensure both double cage nuts are correctly inserted into Speed-Tie unit cavities.

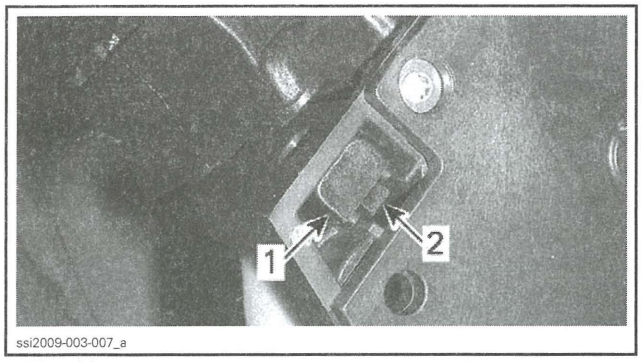

ssi2009-003-007_a

1. *Double cage nut*
2. *Positioning tab*

2. Insert the Speed-Tie unit in vehicle.

2.1 Unlock the front tab securing the LH trim.

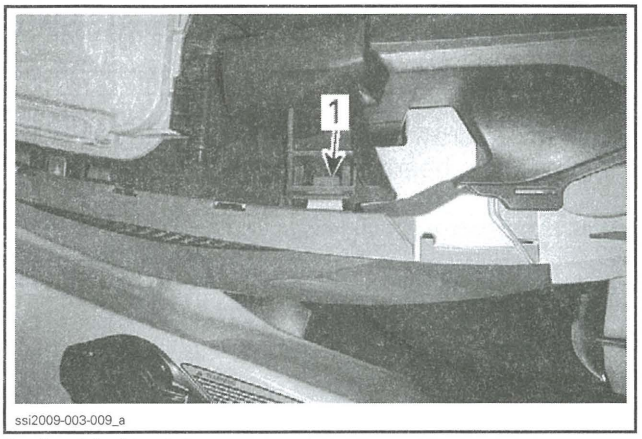

ssi2009-003-009_a

1. *Front locking tab*

2.2 Unlatch the rear tab.

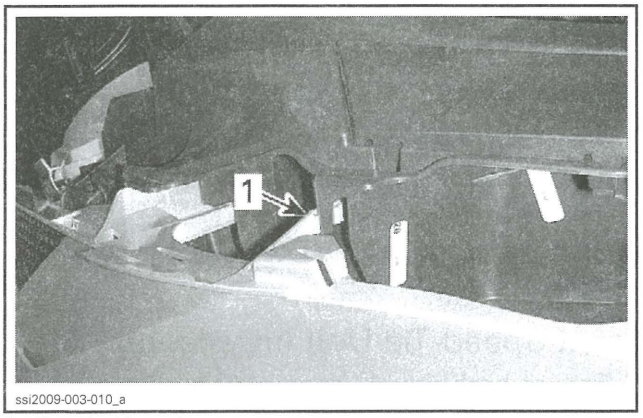

ssi2009-003-010_a

1. *Rear locking tab*

2.3 Slightly pull the top of LH trim and insert the reel of the Speed-Tie unit in its location as shown.

NOTE: Insert the unit with the marking outside.

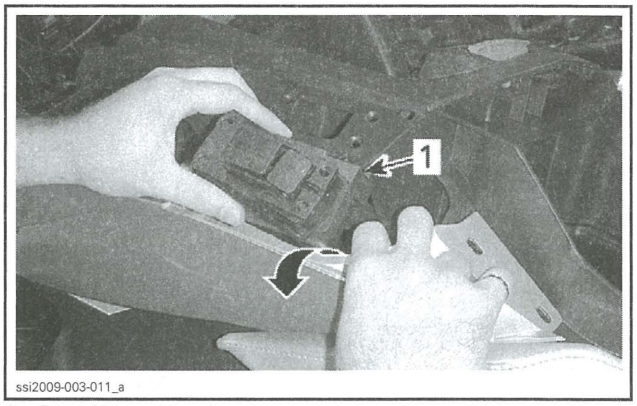

ssi2009-003-011_a

1. *Speed-Tie unit reel*

NOTICE During Speed-Tie unit insertion, be careful not to damage the LH trim.

NOTE: To facilitate the locking mechanism insertion, temporarily pull approximately 200 mm (8 in) of rope between reel and locking mechanism.

3. Position the reel to the bottom of its cavity.

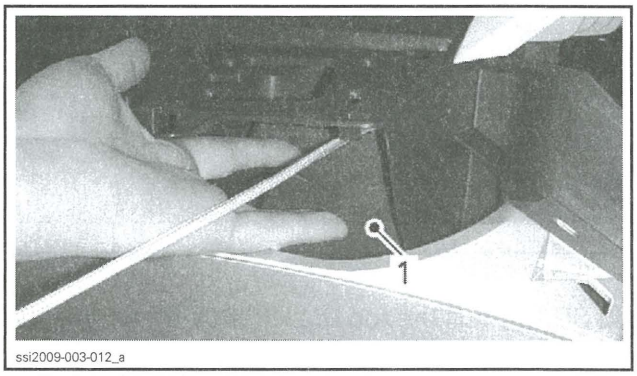

ssi2009-003-012_a

1. *Push in the reel*

4. Lift the lever and insert the locking mechanism so that the lever is pointing toward the front of vehicle.

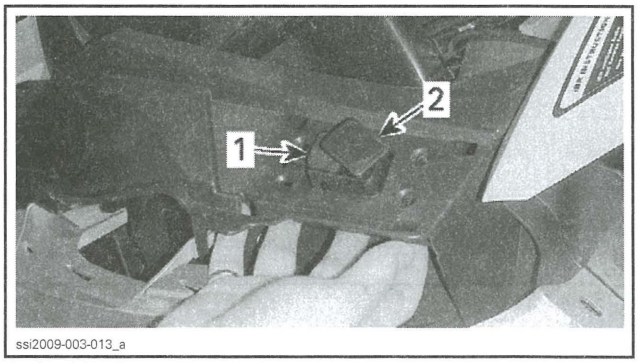

ssi2009-003-013_a

1. *Locking lever*
2. *Rope*

5. Align the reel with the locking mechanism.
6. Tighten locking mechanism retaining screws to specification.

LOCKING MECHANISM RETAINING SCREWS TORQUE
4 N•m (35 lbf•**in**)

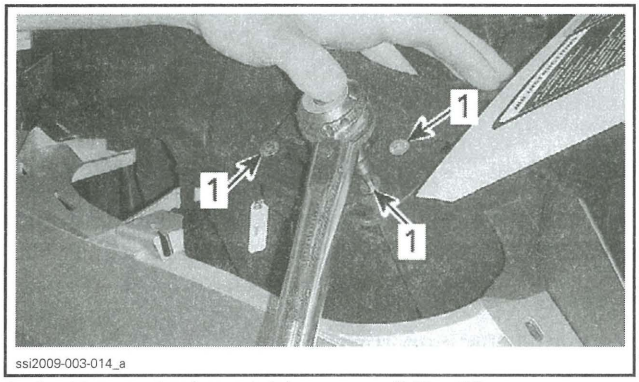

ssi2009-003-014_a

1. Locking mechanism retaining screws (M6 x 45)

7. Install the cam trim.
   7.1 Insert both cam trim retaining hooks into locking mechanism openings.

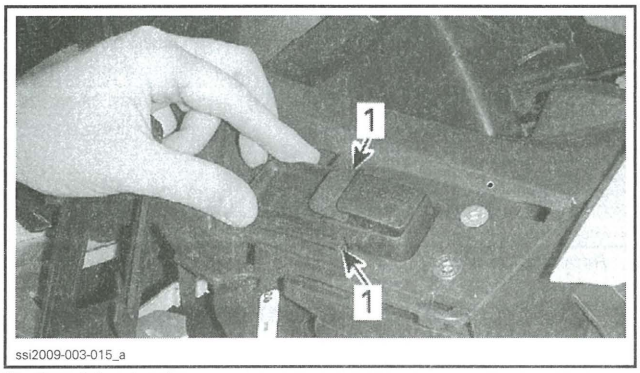

ssi2009-003-015_a

1. Retaining hooks

   7.2 Press down the cam trim until it snaps into place.
8. Install the front trim.
   8.1 Insert top tabs and align lower tabs with openings.

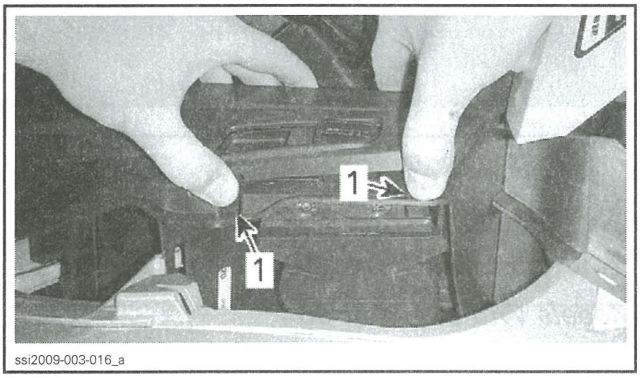

ssi2009-003-016_a

1. Tabs

   8.2 Press trim in place.
9. Test Speed-Tie operation.
10. Reinstall all removed parts.

Rear Speed-Tie Unit Installation

iS and aS Models

1. Lift up the boarding platform.

NOTE: To facilitate the locking mechanism insertion, temporarily pull approximately 200 mm (8 in) of rope.

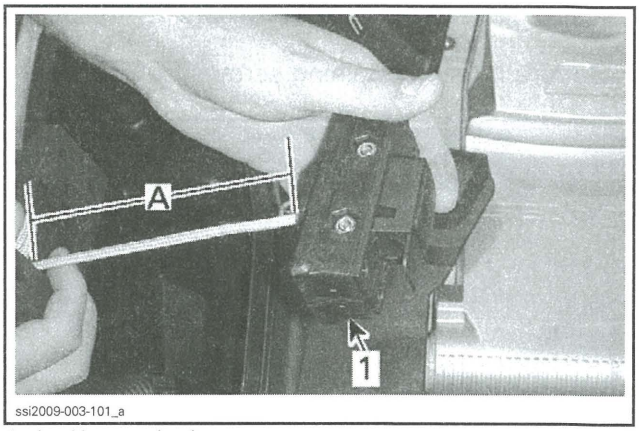

ssi2009-003-101_a

1. Locking mechanism
A. 200 mm (8 in)

2. Insert the locking mechanism in boarding platform opening. Position the locking lever toward the slot.

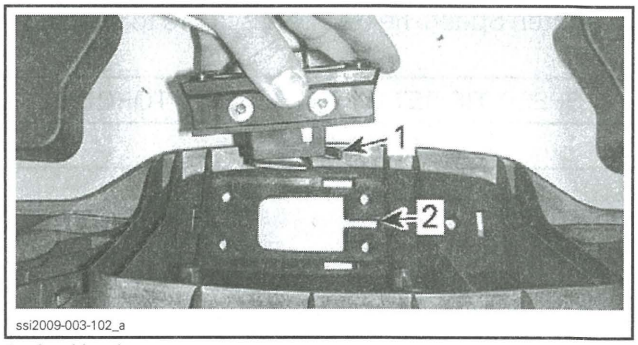

ssi2009-003-102_a

1. Locking lever
2. Boarding platform slot

3. Position a double cage nut on the locking mechanism.

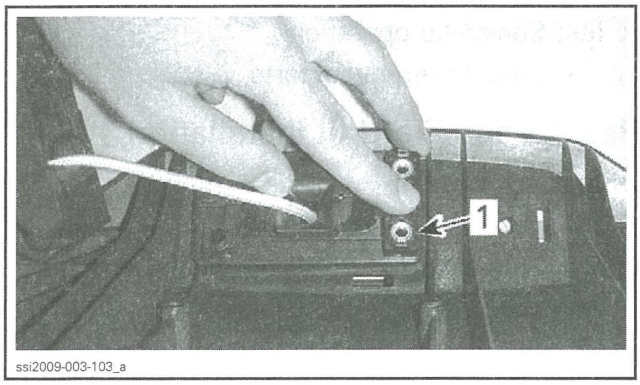

ssi2009-003-103_a

1. Double cage nut

4. Secure it using retaining screws.

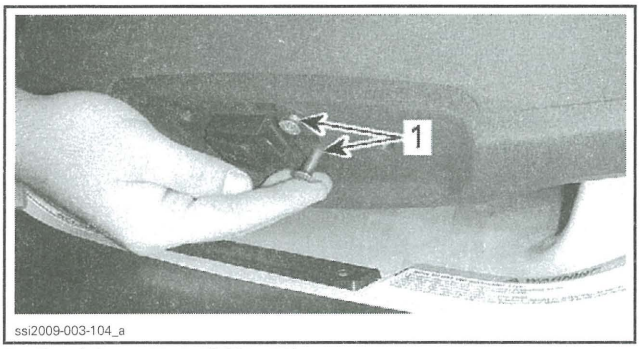

ssi2009-003-104_a

1. Retaining screws (M6 x 45)

5. Install the second double cage nut.
6. Secure the reel of the Speed-Tie unit on boarding platform.
7. Tighten Speed-Tie retaining screws to specification.

SPEED-TIE RETAINING SCREWS TORQUE
5 N•m (44 lbf•**in**)

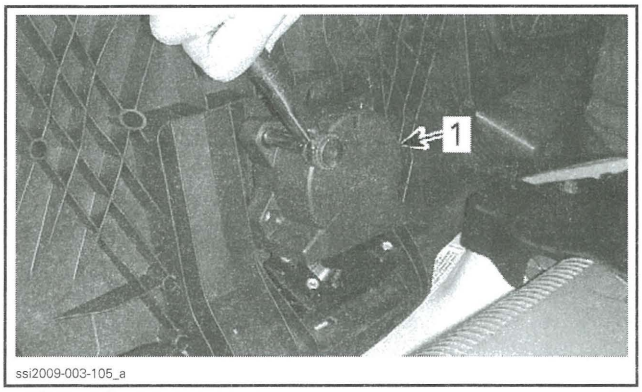

ssi2009-003-105_a

1. Speed-Tie unit

8. Close boarding platform.
9. Tighten locking mechanism retaining screws to specification.

LOCKING MECHANISM SCREWS TORQUE
2.5 N•m (22 lbf•**in**)

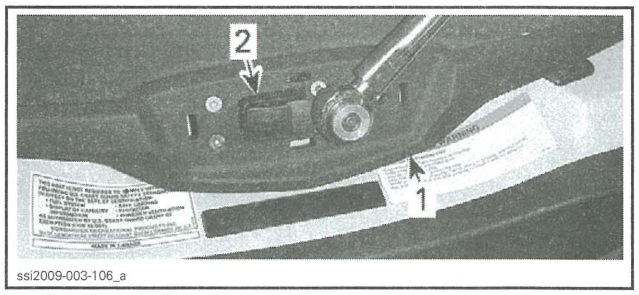

ssi2009-003-106_a

1. Boarding platform
2. Locking mechanism

10. Install the cam trim.
    10.1 Insert both cam trim retaining hooks into locking mechanism openings.

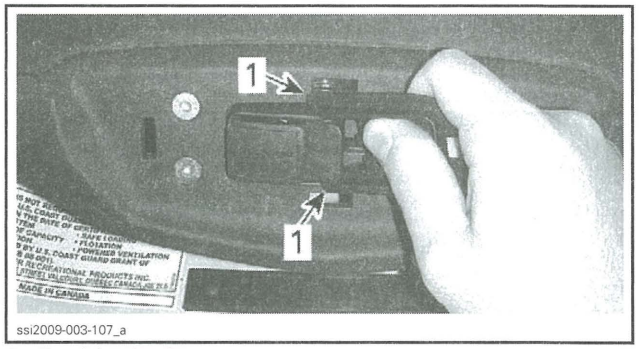

ssi2009-003-107_a

1. Retaining hooks

    10.2 Press down the cam trim against boarding platform.
11. Install the rear trim.
    11.1 Align tabs and alignment pin with corresponding openings.

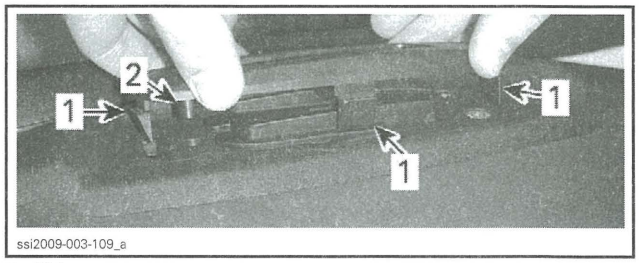

ssi2009-003-109_a

1. Tabs
2. Alignment pin

    11.2 Press trim in place.
12. Test Speed-Tie operation.

Models Without iS or aS

1. Clean all residues of silicone from deck and Speed-Tie cover.

2. Apply LOCTITE 5150 (SILICONE SEALANT) (P/N 296 000 309) in the Speed-Tie unit holes.

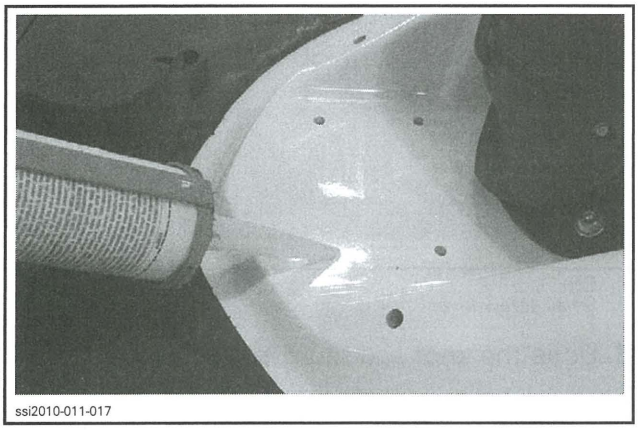
ssi2010-011-017

3. Align Speed-Tie unit holes with body holes.
4. Secure the Speed-Tie unit.

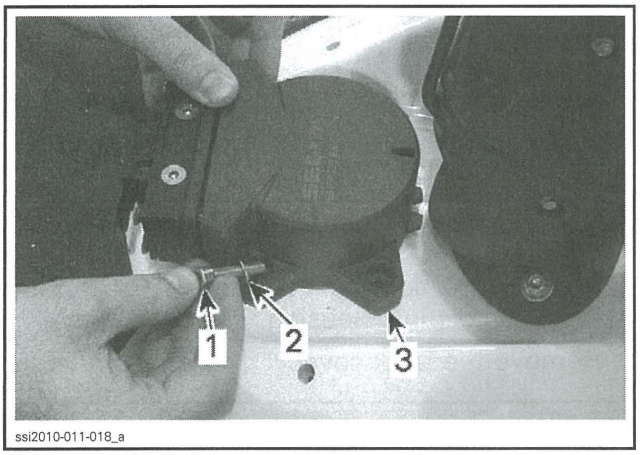

ssi2010-011-018_a

1. *M6 x 30 Allen socket screw*
2. *M6 flat washers*
3. *Speed-Tie unit*

5. Tighten Speed-Tie unit retaining screws to specification.

SPEED-TIE UNIT RETAINING SCREWS TORQUE
8 N•m (71 lbf•**in**)

6. Pull the locking lever to allow cover installation.

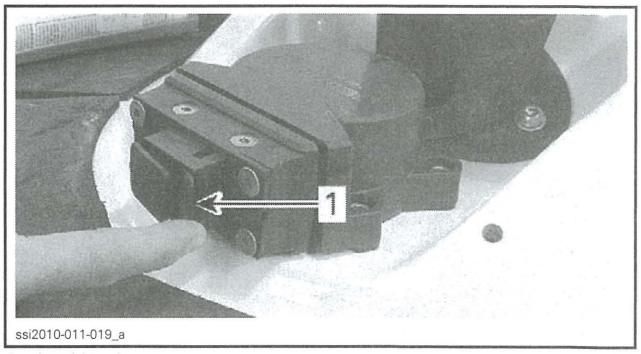

ssi2010-011-019_a

1. *Locking lever*

7. To facilitate new cover installation and avoid cross threading, install both Plastite screws in cover posts (approximately 3-4 turns). Then, remove screws.

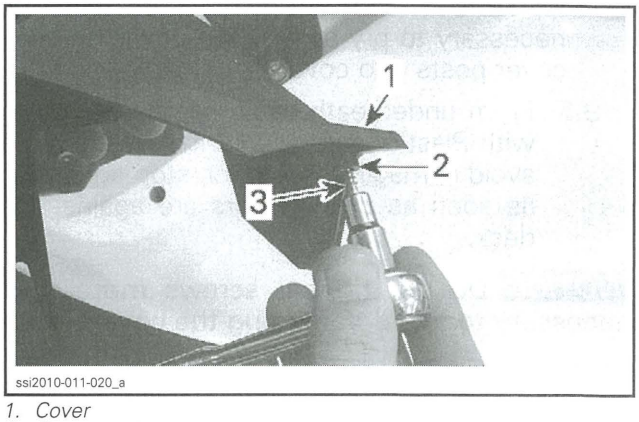

ssi2010-011-020_a

1. *Cover*
2. *Cover posts*
3. *Plastite screws K40 x 13*

8. Apply LOCTITE 5150 (SILICONE SEALANT) (P/N 296 000 309) all around both cover holes.

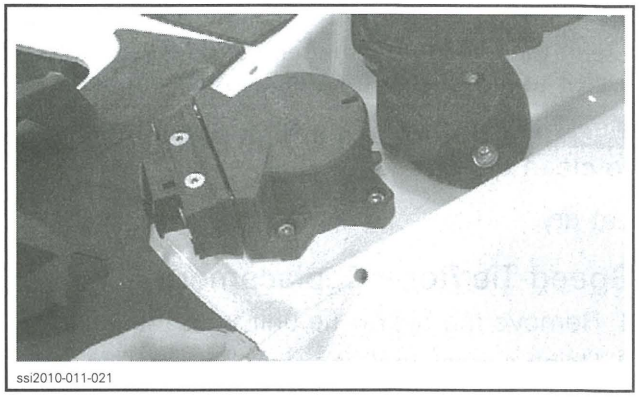
ssi2010-011-021

9. Install the cover.
   9.1 Insert cover opening over the mooring rope stopper and the locking lever.

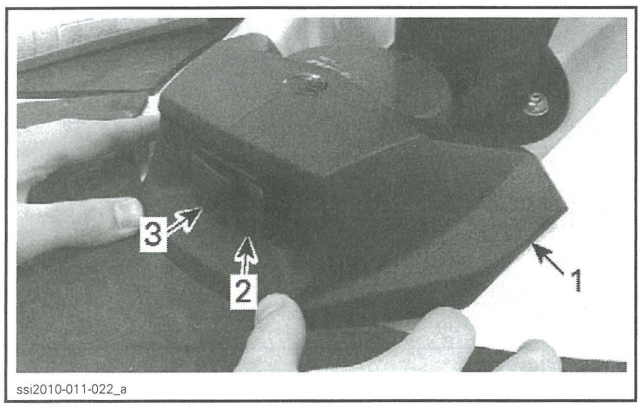

ssi2010-011-022_a

1. Cover
2. Locking lever
3. Mooring rope stopper

9.2 Insert cover posts into cover holes.

NOTE: Due to the drilling precision, it may be necessary to pry slightly the cover to insert cover posts into cover holes.

9.3 From underneath deck, secure the cover with Plastite screws and flat washers. To avoid damaging the cover, stop tightening as soon as the washers are against the deck.

NOTICE Do not tighten screws more than necessary to avoid damaging the cover.

10. Test Speed-Tie operation.
11. Reinstall access covers.

Speed-Tie Unit Cleaning

A minimum of maintenance is required to keep the Speed-Tie unit and the rope in serviceable condition.

Clean the locking mechanism and rope with fresh water to remove salt, sand or other deposits.

NOTICE Do not use a high pressure washer to clean the Speed-Tie unit.

Let dry.

Speed-Tie Rope Replacement

1. Remove the Speed-Tie unit from the vehicle.
2. Using a small tool, remove the rope cap.

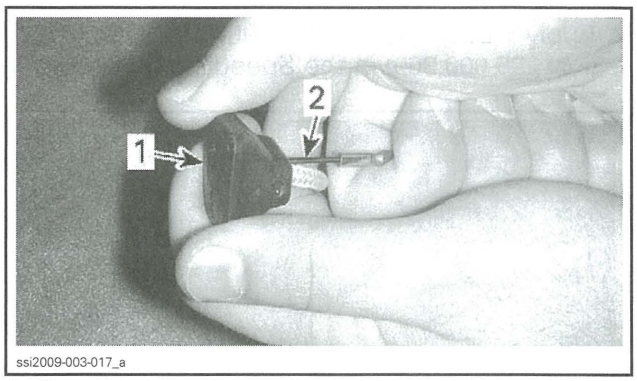

ssi2009-003-017_a

1. Cap
2. Small screwdriver

3. Untie the knot and remove the button.

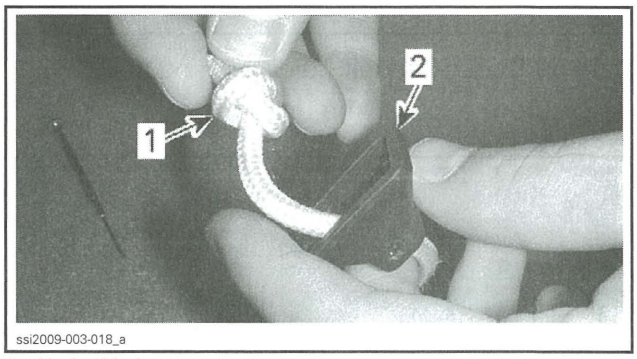

ssi2009-003-018_a

1. Untie this knot
2. Button

4. Remove the locking mechanism and let the rope retracts into housing.
5. Remove the back cover.

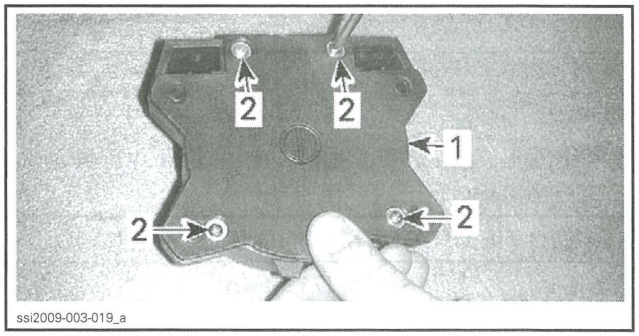

ssi2009-003-019_a

1. Back cover
2. Retaining screws

6. Remove the rewind unit.

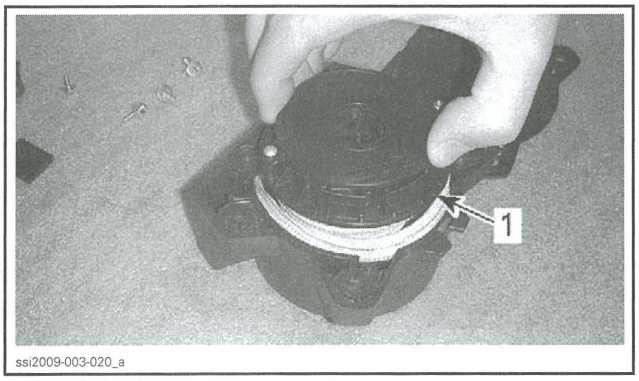

ssi2009-003-020_a

1. Rewind unit

7. Turn the unit upside down and remove the retaining screw.

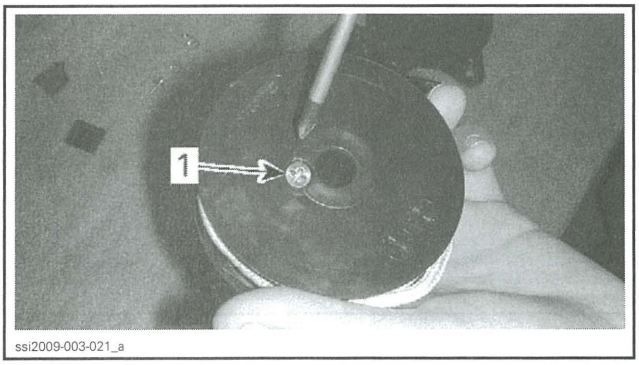

ssi2009-003-021_a

1. Retaining screw

8. Split the rewind unit and remove damaged rope.

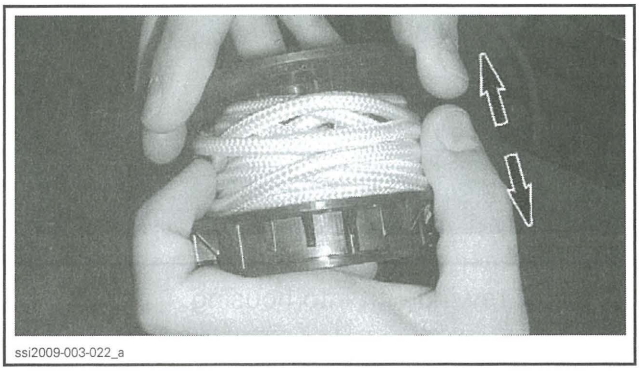
ssi2009-003-022_a

9. Before discarding rope, remove and keep the inner stopper.

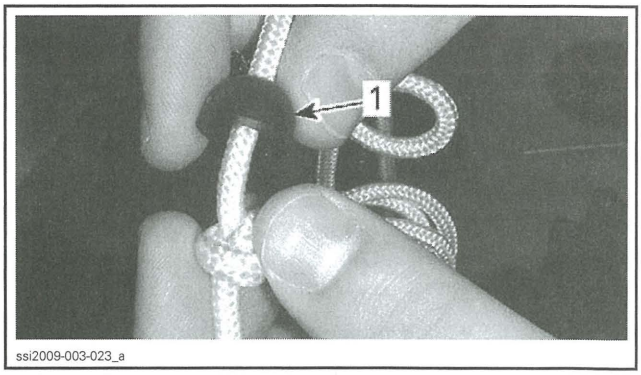

ssi2009-003-023_a

1. Inner stopper

10. Insert the inner stopper on new rope and tie a knot near the end of the line. Position the inner stopper in order to its flat side leans against the knot.

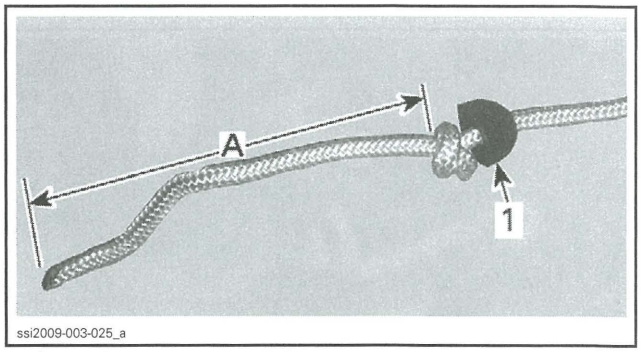

ssi2009-003-025_a

1. Inner stopper
A. 106 mm ± 6 mm (4-1/8 in ± 15/64 in)

11. On rewind unit base, identify the short tongue.

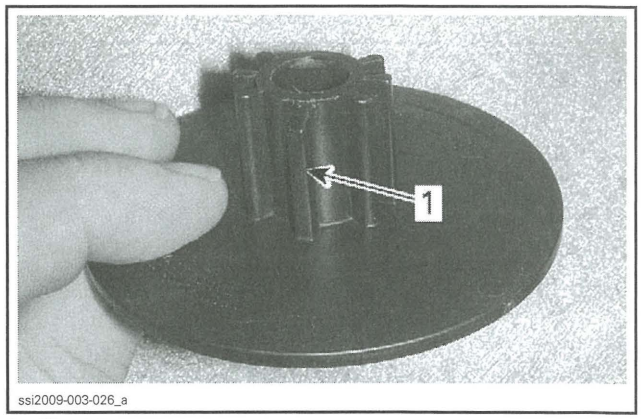

ssi2009-003-026_a

1. Short tongue

12. Install the rope end (with the knot) over the short tongue as shown.

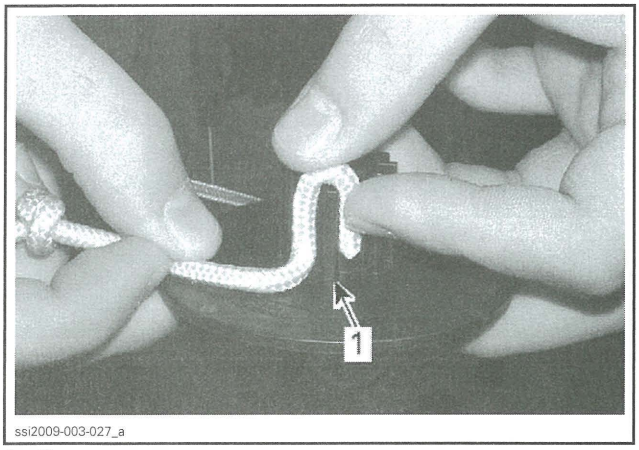

ssi2009-003-027_a

1. Short tongue

13. Install the rewind unit cover.

13.1 Align the cover notch and the rope.

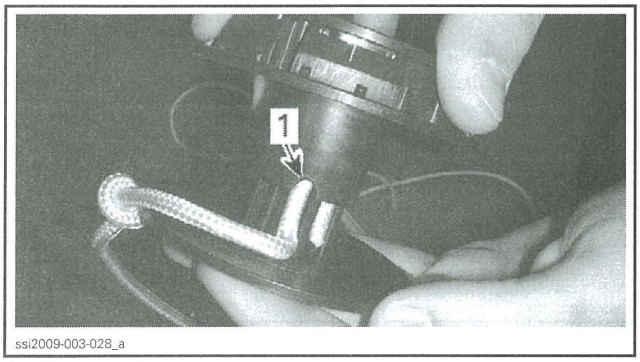

ssi2009-003-028_a

1. Cover notch

13.2 Press in the cover until both parts are completely pressed together.

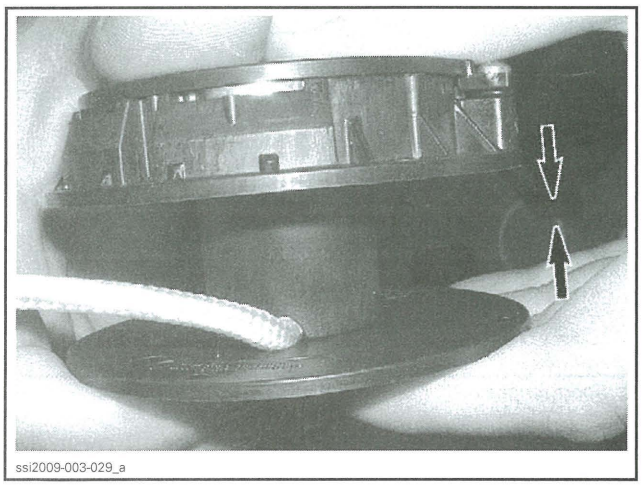
ssi2009-003-029_a

13.3 Install and tighten retaining screw to specification.

REWIND UNIT COVER RETAINING SCREW TORQUE
1 N•m (9 lbf•**in**)

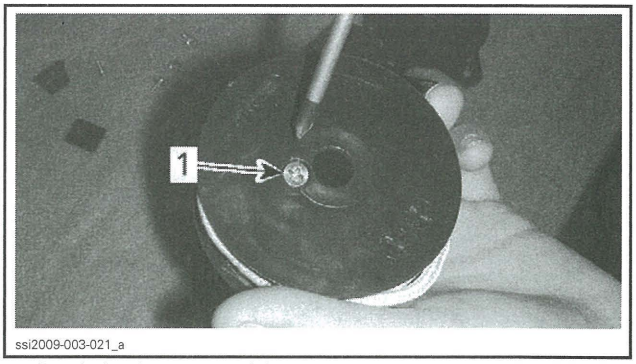

ssi2009-003-021_a

1. Rewind unit cover retaining screw

14. Turn rope clockwise. Check indications on inner side of rewind unit.

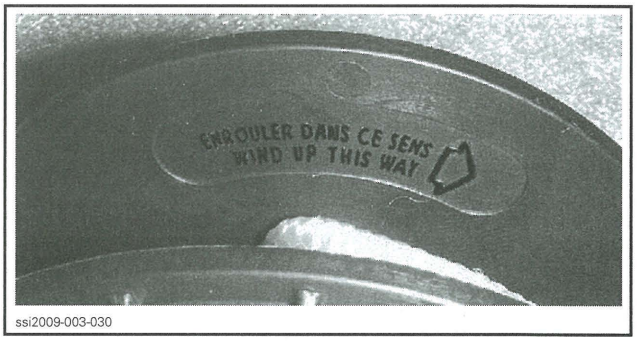

ssi2009-003-030

15. Lock the end of rope as shown.

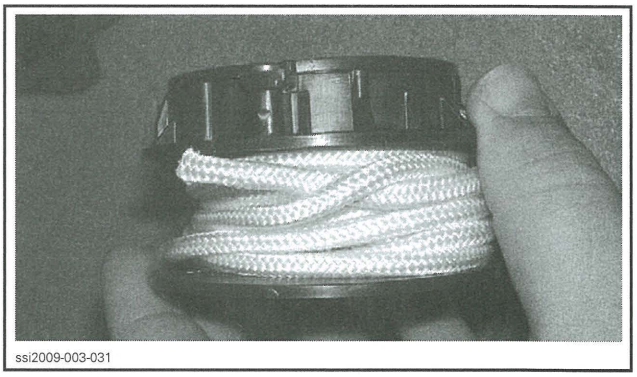
ssi2009-003-031

16. Install rewind unit into housing.

16.1 Install the rewind unit with the retaining screw downward. The end of rope must be placed in front of the housing opening.

16.2 Insert spring in shaft notch.

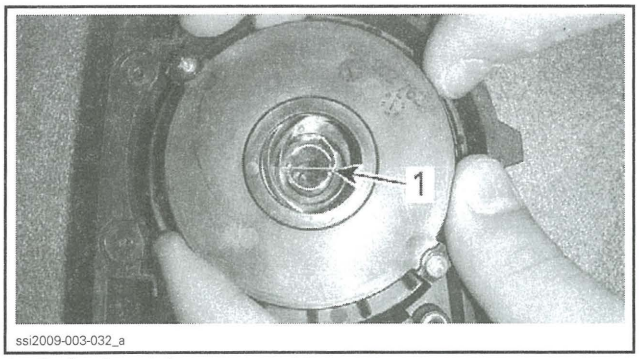

1. Spring in notch

NOTE: Ensure spring is properly inserted in notch.

17. Using a screwdriver, crank rewind spring exactly 7 turns (clockwise).

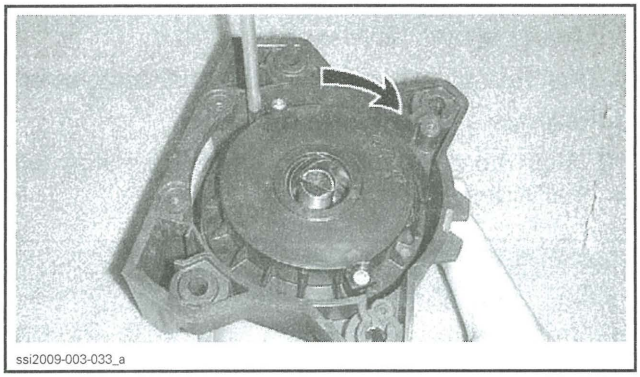

18. Unlock the end of the rope and pull it out by the housing opening.

NOTE: Be careful not to release the rope and the spring. Otherwise you will need to remove drum and repeat the cranking operation.

19. Install locking mechanism and rope.

19.1 Pull out rope end.

19.2 Insert end of rope through locking mechanism.

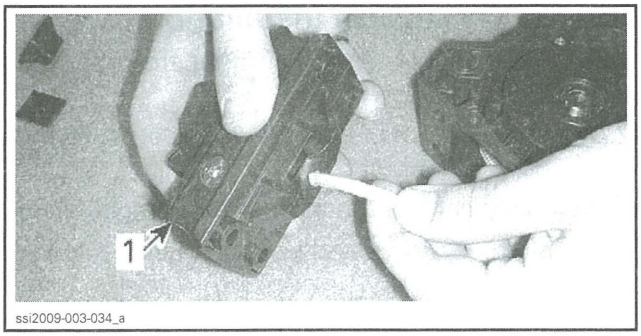

1. Locking mechanism

19.3 Pass rope end through the rope button and tie a knot on the rope end, see picture.

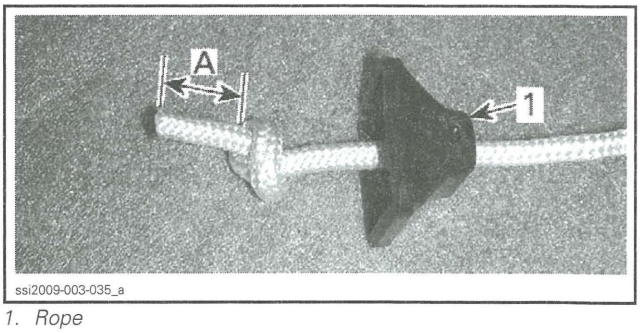

1. Rope
A. 18 mm ± 6 mm (23/32 in ± 15/64 in)

19.4 Pull knot in the button and install the button cap. Make sure cap is properly snapped.

20. Install and tighten Speed-Tie cover retaining screws to specification.

SPEED-TIE COVER RETAINING SCREWS TORQUE
1 N•m (9 lbf•**in**)

21. Check Speed-Tie operation.

22. Reinstall the Speed-Tie unit on vehicle.

BOARDING PLATFORM (iS AND aS MODELS)

Boarding Platform Removal

1. Unlatch the boarding platform.
2. Open boarding platform completely.
3. Remove plastic dart securing rear shock assembly support.

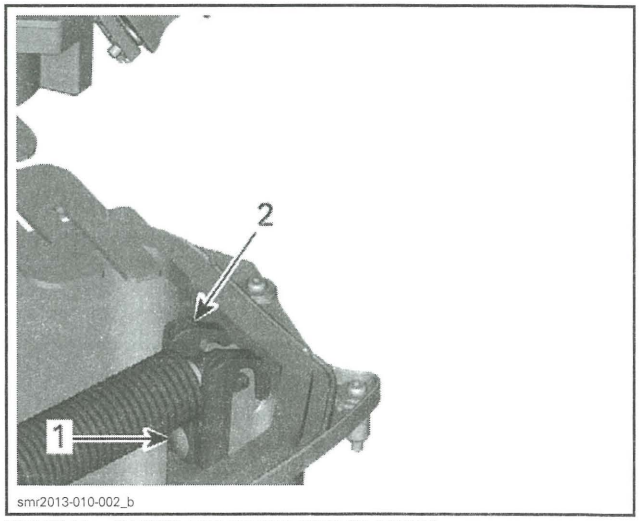

TYPICAL - PARTS REMOVED FOR CLARITY
1. Plastic dart
2. Rear shock assembly support

4. Remove rear shock assembly support.

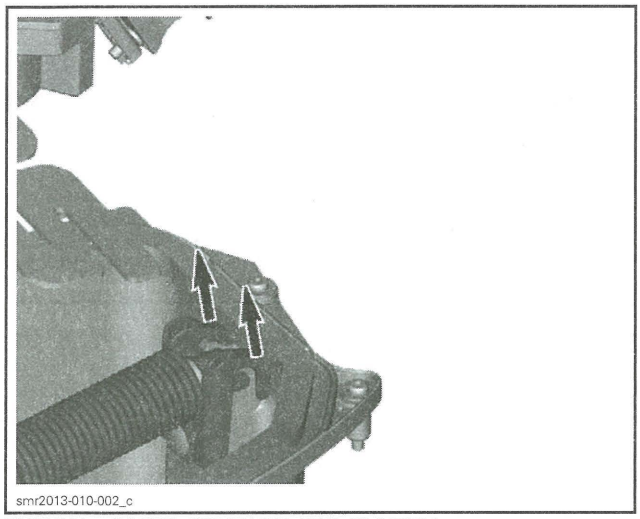
smr2013-010-002_c

TYPICAL - PARTS REMOVED FOR CLARITY

5. Remove front shock assembly support.
6. Cut locking ties retaining the bellows of gas shock.

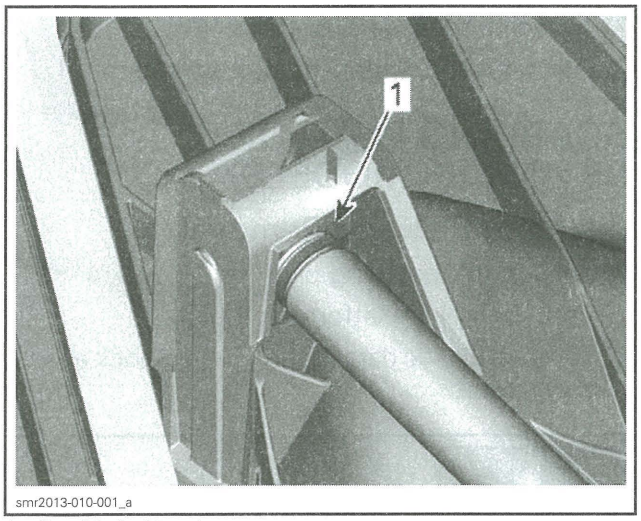

smr2013-010-001_a

1. *Cut this locking tie*

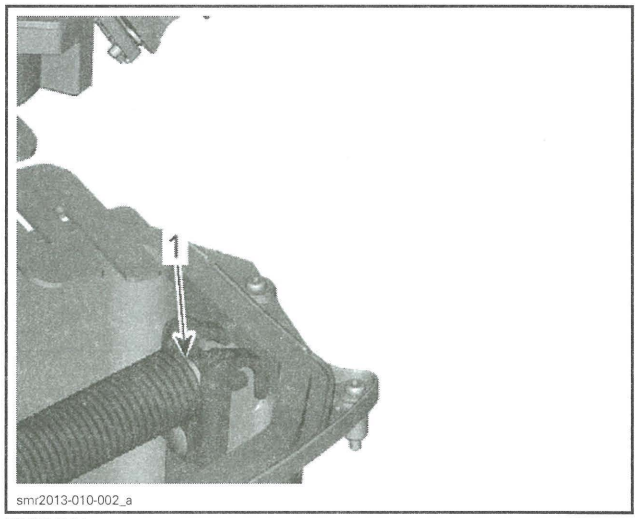

smr2013-010-002_a

TYPICAL
1. *Cut this locking tie*

7. Move bellows downward.
8. Unscrew gas shock from its upper attachment.
9. Remove gas shock from vehicle.
10. Align boarding platform hinge openings with flat sides of fixed hinges.

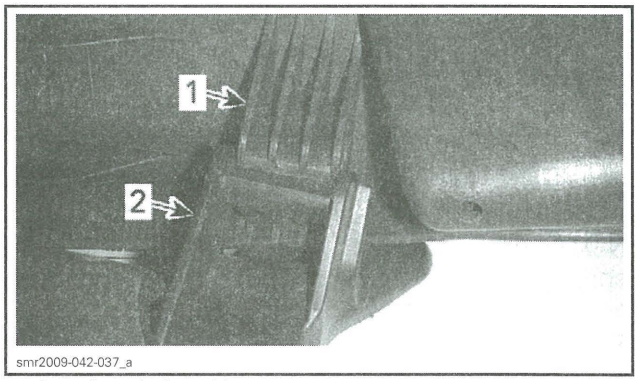

smr2009-042-037_a

1. *Boarding platform hinge*
2. *Fixed hinge*

11. Remove boarding platform.

Boarding Platform Installation

1. Remove gas shock attachment from boarding platform.
2. Apply LOCTITE 414 (P/N 413 705 800) on threads of shock absorber body.
3. Manually tighten the attachment on gas shock.
4. Install the bellows and secure it using a locking tie.
5. Install the gas shock on cover.

NOTE: The corrugated section of bellows must point downward.

6. Align boarding platform hinge openings with flat sides of fixed hinges.

7. Push in the boarding platform to assemble hinges.
8. Position the bottom of the gas shock on cavity opening.

NOTICE To avoid breaking the attachment, do not force to insert it in cavity.

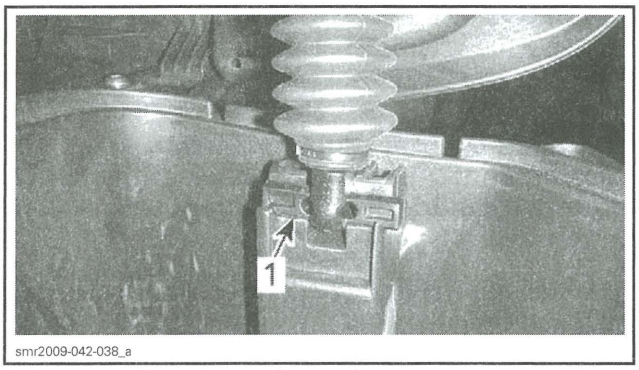

1. Lower attachment on cavity opening

NOTE: Make sure upper attachment is properly inserted in its slots.

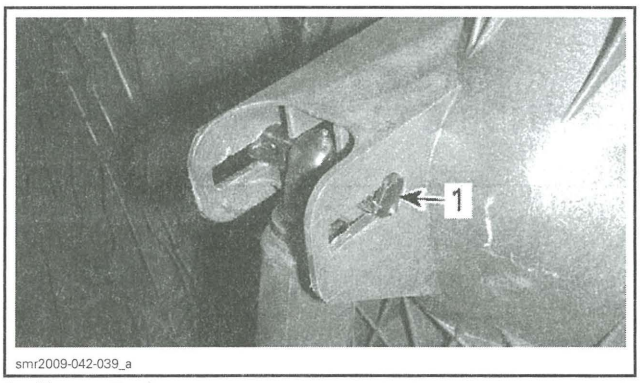

1. Upper attachment

9. Install rear shock assembly support onto rear shock and securing in place using plastic dart.

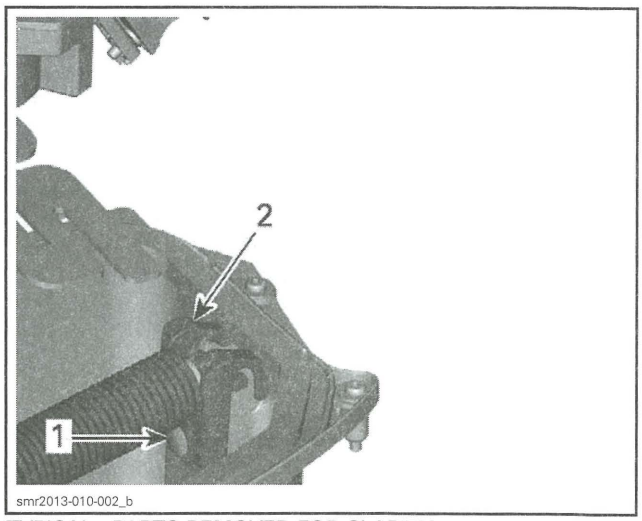

TYPICAL - PARTS REMOVED FOR CLARITY
1. Plastic dart
2. Rear shock assembly support

10. Close boarding platform to lock the bottom of the gas shock.
11. Lock boarding platform.

DECK EXTENSION (iS AND aS MODELS)

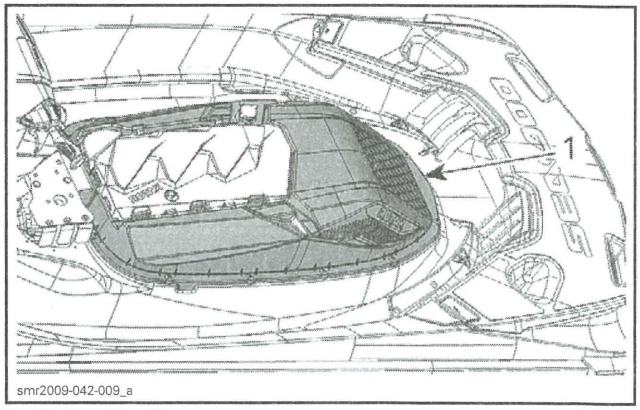

1. Deck extension

Deck Extension Removal

1. Open seat.
2. Remove the rear ventilation box.

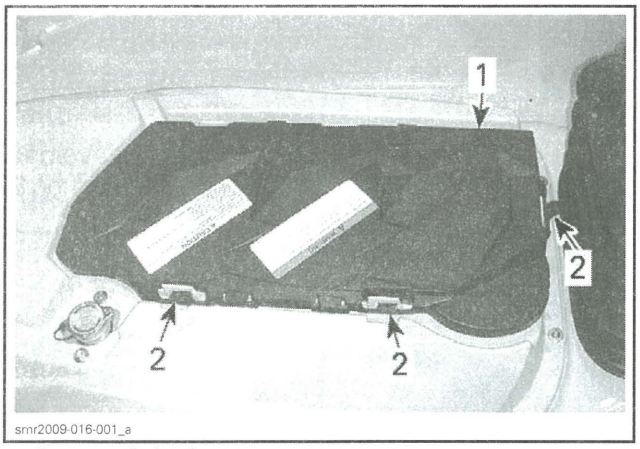

smr2009-016-001_a

1. Rear ventilation box
2. Retaining latches

3. Remove screws securing air inlet to deck extension.

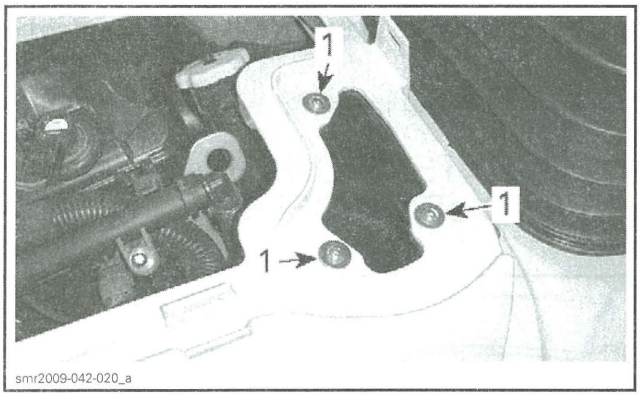

smr2009-042-020_a

1. Air inlet retaining screws

4. Remove coolant reservoir screws.

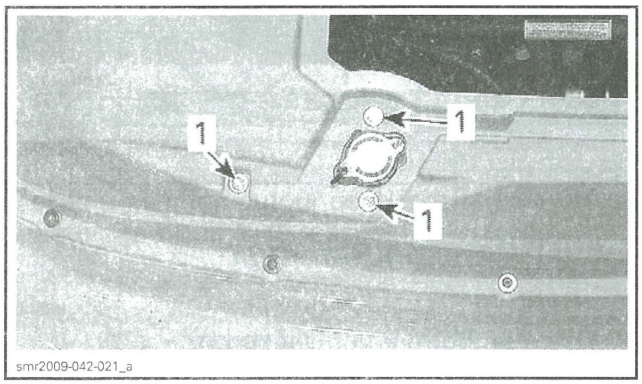

smr2009-042-021_a

1. Coolant reservoir screws

5. Remove all screws retaining deck extension to fixed deck.
6. Close seat.
7. Tilt the *MOVING DECK*, see procedure in this subsection.
8. Remove the deck extension.

Deck Extension Installation

1. Position the deck extension.
2. Install screws retaining deck extension and air inlet.
3. Tighten deck extension retaining screws to specification.

DECK EXTENSION RETAINING SCREWS TORQUE
1.2 N•m (11 lbf•**in**)

NOTICE **Do not tighten screws over this recommended torque. Otherwise, the rubber grommet could turns and screw will be hard to remove.**

4. Install and tighten coolant reservoir screws to specification.

COOLANT RESERVOIR SCREWS TORQUE
5 N•m (44 lbf•**in**)

5. Reposition moving deck. Refer to *MOVING DECK* in this subsection.

MOVING DECK (iS AND aS MODELS)

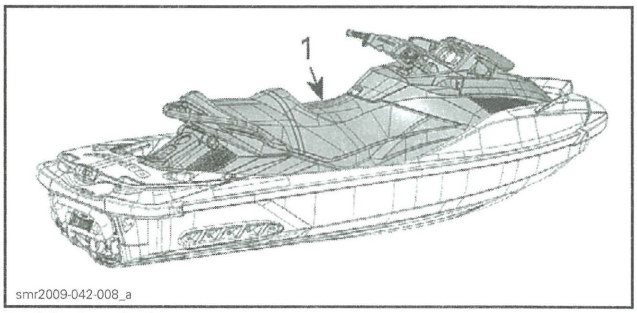

smr2009-042-008_a

1. Moving deck

The moving deck is comprised of:
- Front storage cover
- Front body module
- Steering
- Seat
- Foot wells.

The moving deck is attached to the intelligent suspension and moves as a single unit.

The moving deck does not comprise the boarding platform and the rear storage bins.

It is possible to tilt the moving deck for servicing the watercraft, such as:
- Deck extension removal

- Working on air intake system
- Suspension position sensor replacement
- Suspension hydraulic pump replacement.

The moving deck removal is also required for major repairs, such as:

- Engine removal
- Suspension component removal (except suspension position sensor)
- Fuel tank removal.

Tilting Moving Deck for Servicing Watercraft

1. Remove the *BOARDING PLATFORM*, see procedure in this subsection.

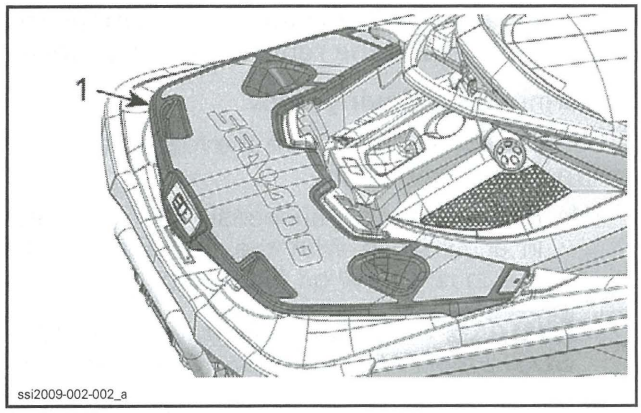

1. Boarding platform

2. Remove bolts securing both rear suspension arm covers.

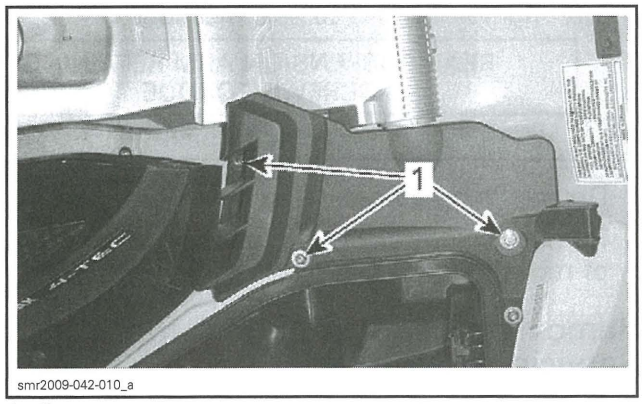

1. Cover screws

3. Mark position of rear suspension arm brackets for proper reinstallation.
4. Remove and discard screws securing rear suspension arm to fixed deck.

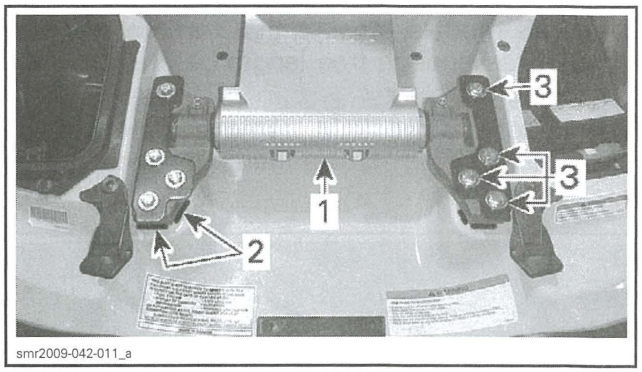

1. Rear suspension arm
2. Reinstallation marks
3. Screws (discard)

5. Lift the rear suspension arm against seat handle and attach it with locking tie or strap.

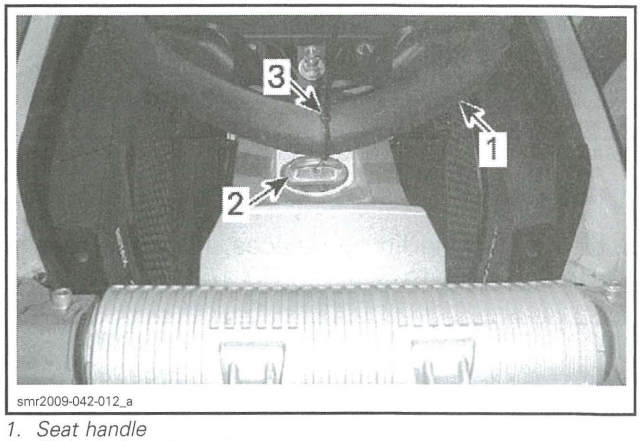

1. Seat handle
2. Ski/wakeboard attachment
3. Locking tie

6. Install two pieces of wood (4 x 4) under moving deck front area as shown to avoid potential damage when lifting the moving deck.

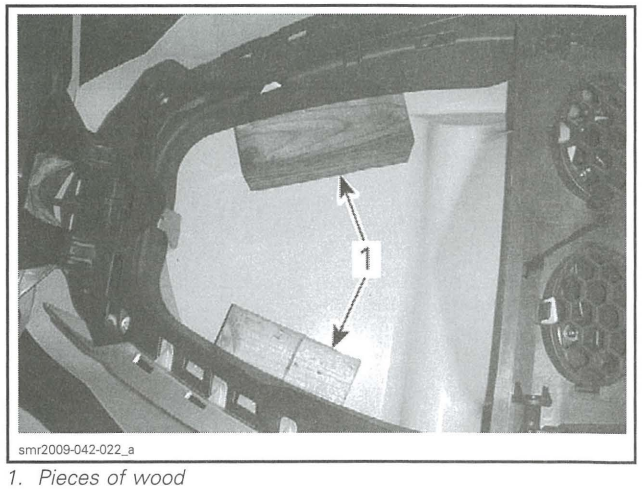

1. Pieces of wood

7. Place steering in its lower position.

8. On aS models, ensure that remote reservoir hose has enough free length before tilting the moving deck.
   – If hose is too tight, remove remote reservoir retaining screws then move hose inside deck.

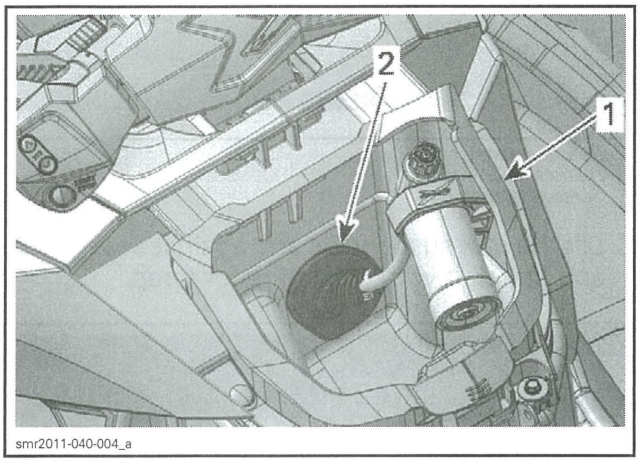

aS MODEL
1. *Remote reservoir retaining screws (2x)*
2. *Hose bellows*

9. Using suitable lifting devices, raise the rear of moving deck to 340 mm (13-1/2 in).

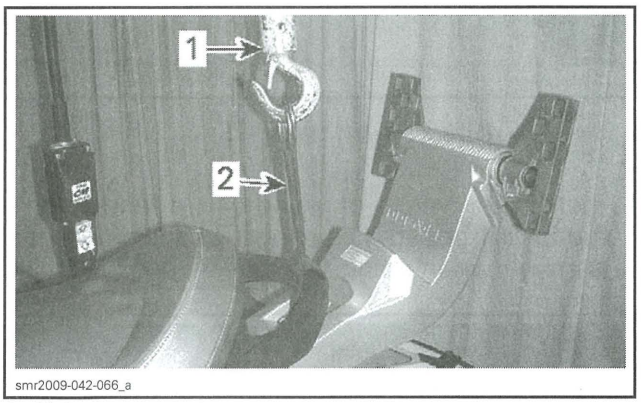

1. *Hoist*
2. *Lifting strap*

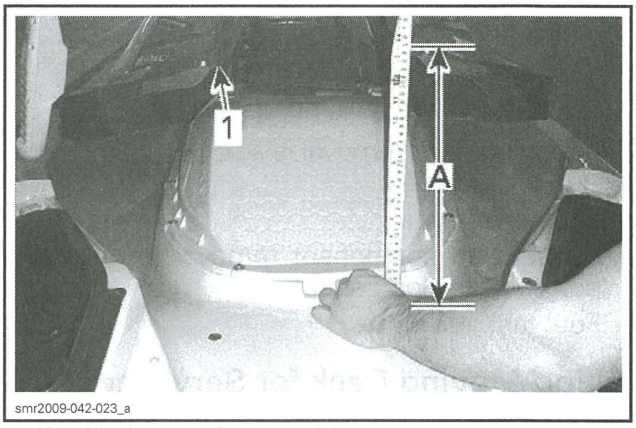

1. *Use this rivet as reference point*
A. *340 mm (13-1/2 in)*

NOTICE **Lifting the rear of moving deck more than the recommended height can damage the steering cable and the remote reservoir hose.**

Lowering Back Moving Deck

1. Carefully lower and secure the rear suspension arm to the fixed deck.
   1.1 Position the rear suspension arm brackets in accordance with the reference marks previously drew on fixed deck.

   NOTICE **If no mark was trace, refer to *IS SUSPENSION* subsection for proper procedure to install and align the rear suspension arm.**

   1.2 Install NEW screws to secure rear suspension arm brackets.
   1.3 Tighten screws to specification.

REAR SUSPENSION ARM RETAINING SCREWS TORQUE
25 N•m (18 lbf•ft)

2. Detach lifting device.
3. Remove pieces of wood located under the front of moving deck.

Removing the Moving Deck for Servicing Watercraft

1. Open the front storage cover and remove the front basket.
2. On aS models, remove remote reservoir from moving deck as follows:
   2.1 Remove both retaining screws.
   2.2 Detach hose bellows from moving deck.
   2.3 Insert remote reservoir into moving deck hole.

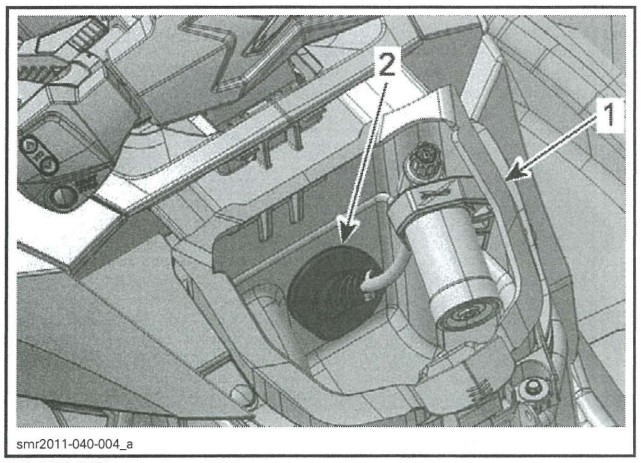

aS MODEL
1. *Remote reservoir retaining screws (2x)*
2. *Hose bellows*

3. Remove the *BOARDING PLATFORM*, see procedure in this subsection.

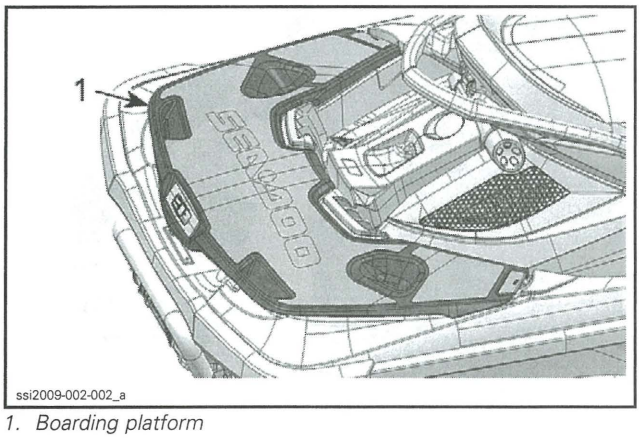

1. *Boarding platform*

4. Remove bolts securing both rear suspension arm covers.

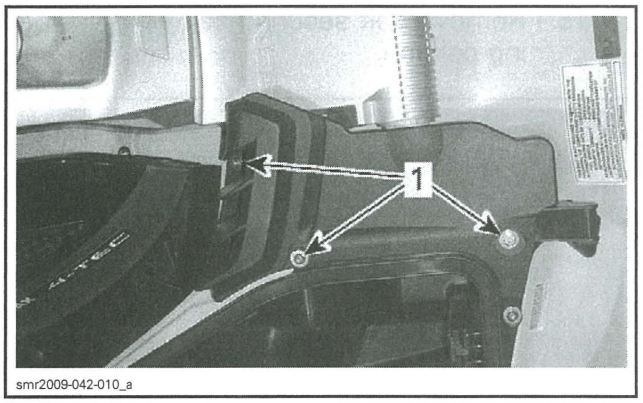

1. *Cover screws*

5. Mark position of rear suspension arm brackets for proper reinstallation.
6. Remove and discard screws securing rear suspension arm to fixed deck.

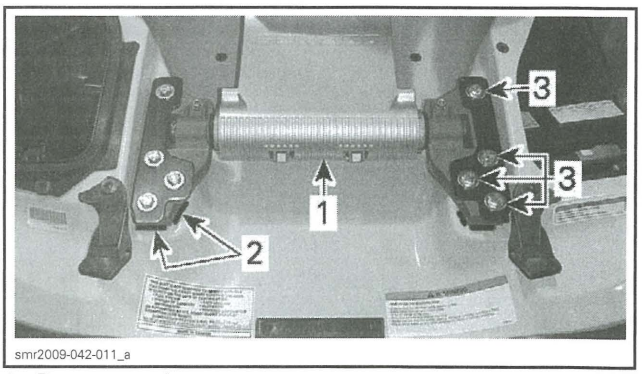

1. *Rear suspension arm*
2. *Reinstallation marks*
3. *Screws (discard)*

7. Lift and attach the rear suspension arm against seat handle.

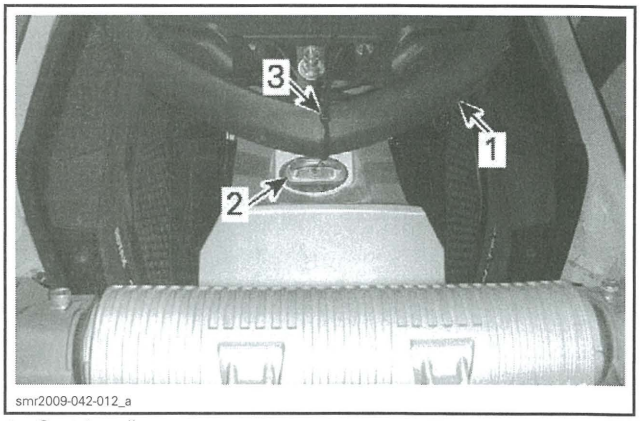

1. *Seat handle*
2. *Ski/wakeboard attachment*
3. *Locking tie*

8. Manually tip up the front of moving deck and install a piece of wood (2 x 4) between fixed deck and each lateral supports.

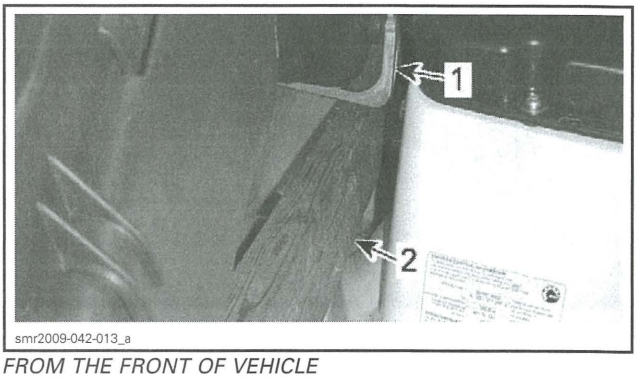

FROM THE FRONT OF VEHICLE
1. *RH lateral support*
2. *Piece of wood*

9. Detach moving deck from lateral supports.
   9.1 Remove front carpet of foot wells and protective caps on both sides of the moving deck. Discard the front carpets.

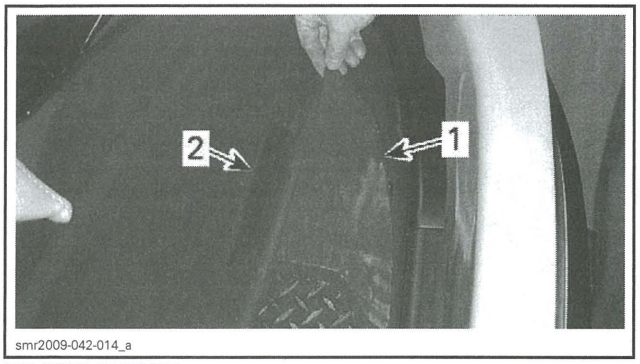

smr2009-042-014_a

RH SIDE SHOWN
1. *Front carpet (discard)*
2. *Protective cap*

9.2 Remove and discard screws securing moving deck to lateral supports.

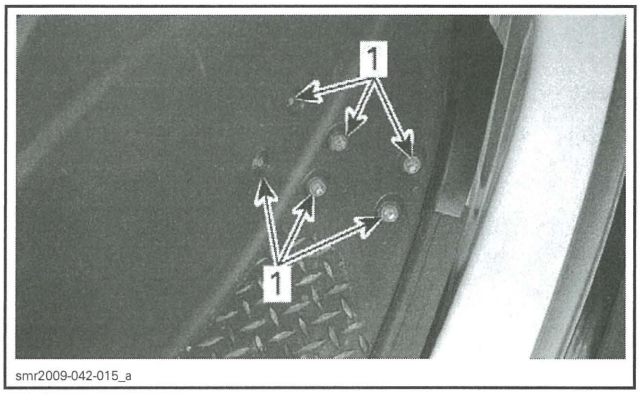

smr2009-042-015_a

RH SIDE SHOWN
1. *Retaining screws (discard)*

10. Open seat.
11. Remove and discard M8 screws securing the suspension mounting plate and moving deck.

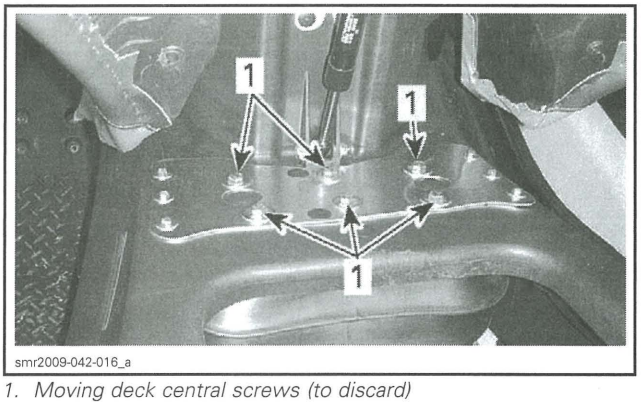

smr2009-042-016_a

1. *Moving deck central screws (to discard)*

12. Close seat.
13. Remove the gauge support. Refer to *INFORMATION CENTER (GAUGE)* subsection.

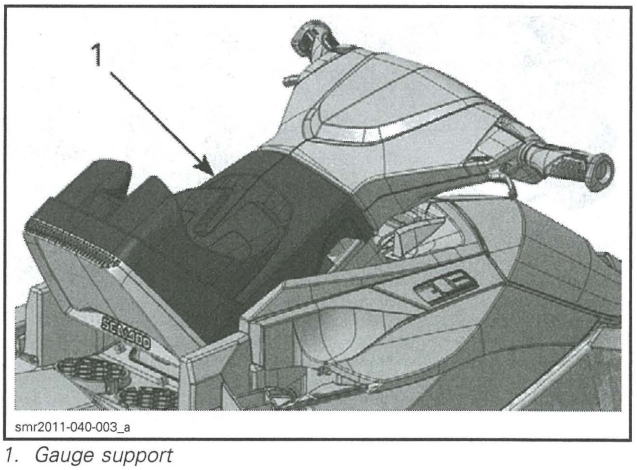

smr2011-040-003_a

1. *Gauge support*

14. Disconnect both connectors under moving deck.

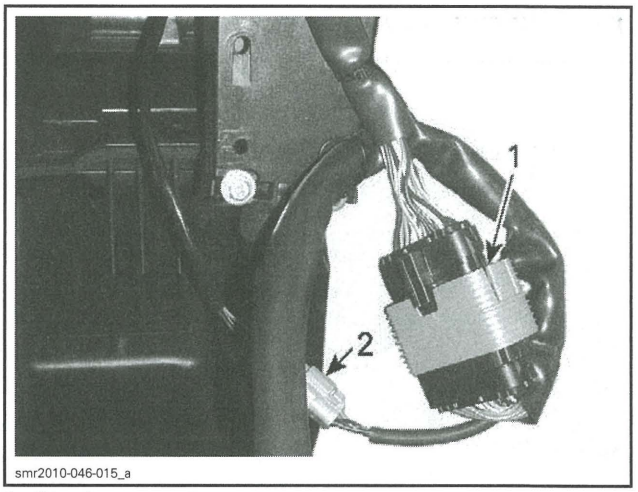

smr2010-046-015_a

1. *Steering connector*
2. *O.T.A.S. connector*

15. Detach steering cable from steering column.
    15.1 Remove bolt securing ball joint to steering column.

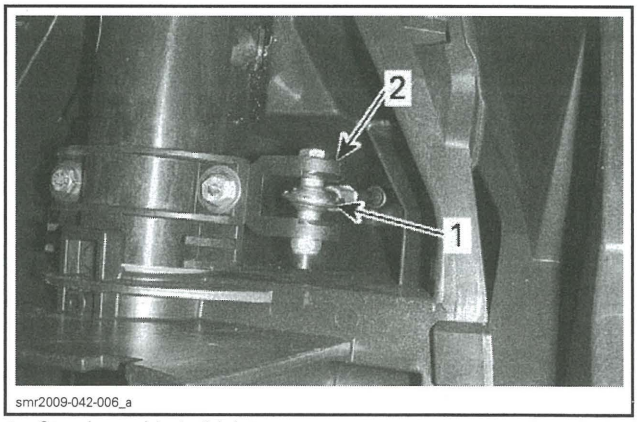

smr2009-042-006_a

1. *Steering cable ball joint*
2. *Steering column*

15.2 Remove bolts retaining steering cable clamp.

15.3 Unlatch steering cable clamp.

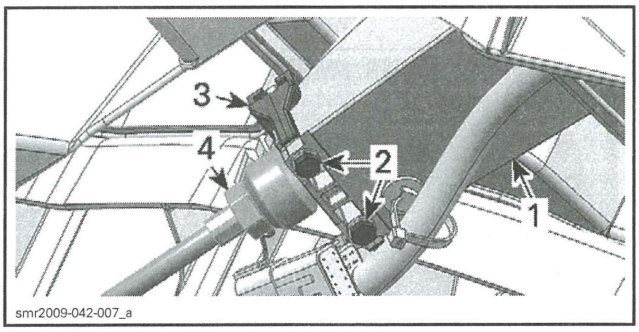

1. Steering column
2. Steering column clamp bolts
3. Steering column clamp
4. Steering cable adjusting nut

15.4 Place steering in its lower position.

15.5 Free steering cable from fixed clamp.

16. Install lifting straps.

16.1 Using both mooring cleats under steering, install two lifting straps.

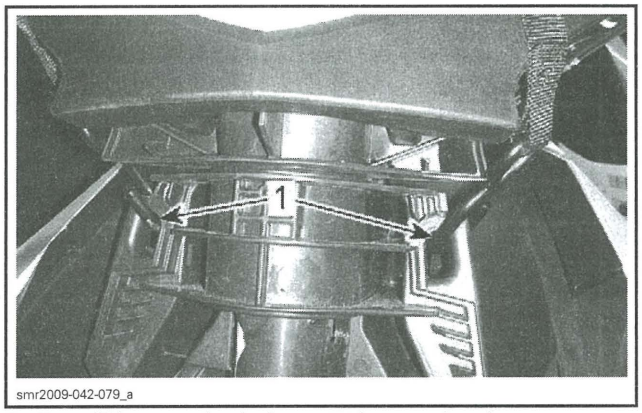

1. Front lifting strap hooks into steering mooring cleats

16.2 Install another lifting strap on seat handle.

17. Attach all lifting straps to an lifting device to lift the moving deck.

⚠ CAUTION Make sure lifting device is located at the center of the vehicle to rise moving deck horizontally.

18. Raise moving deck slowly and drive steering cable out of steering column.

19. Place the moving deck on a level surface.

Moving Deck Installation

1. Install 2 pieces of wood under lateral supports.

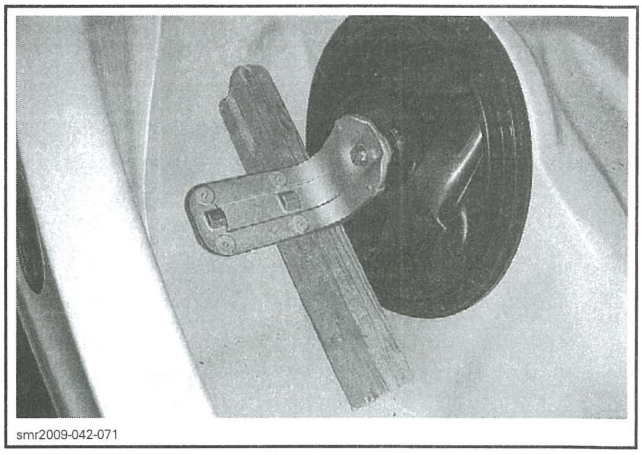

2. Slowly, lower the moving deck just enough to be able to insert the end of steering cable in steering column.

NOTICE Make sure not to pinch electrical harness while lowering the moving deck.

3. Install steering cable clamp and its bolts. Do not tighten bolts yet.

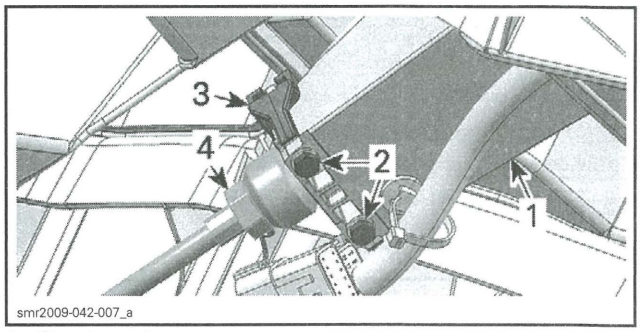

1. Steering column
2. Steering column clamp bolts
3. Steering column clamp
4. Steering cable adjusting nut

4. Connect both electrical connectors under moving deck.

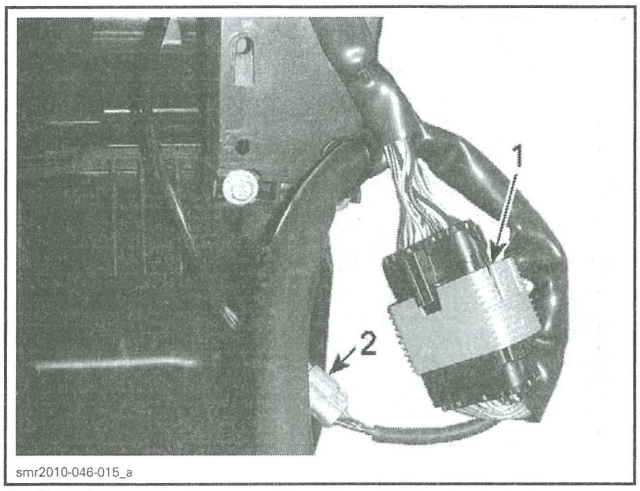

smr2010-046-015_a

1. Steering connector
2. O.T.A.S. connector

5. Lower the front of moving deck and secure it on both lateral supports using **NEW** screws.

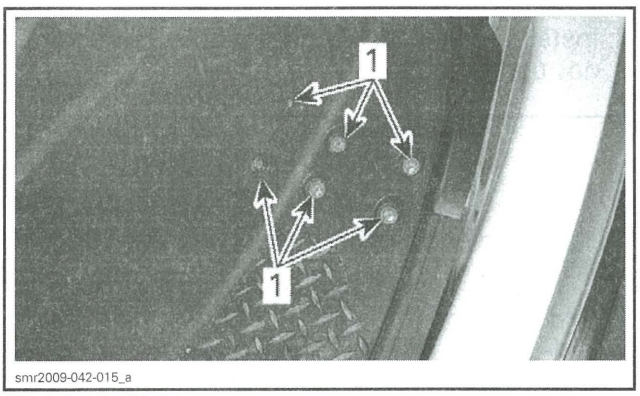

smr2009-042-015_a

RH SIDE SHOWN
1. Retaining screws (new)

6. Remove pieces of wood located under lateral supports and reposition one under moving deck front area.

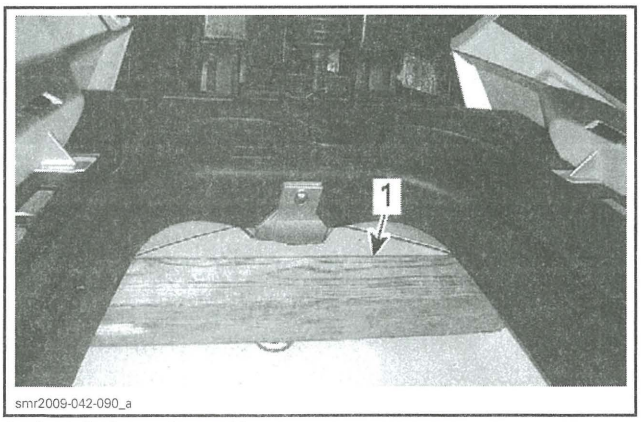

smr2009-042-090_a

1. Install piece of wood here

7. Remove the front lifting straps.
8. Open seat.
9. Raise rear of moving deck until suspension is clear of moving deck.

NOTICE **Do not raise the rear of moving deck more than 340 mm (13-1/2 in).**

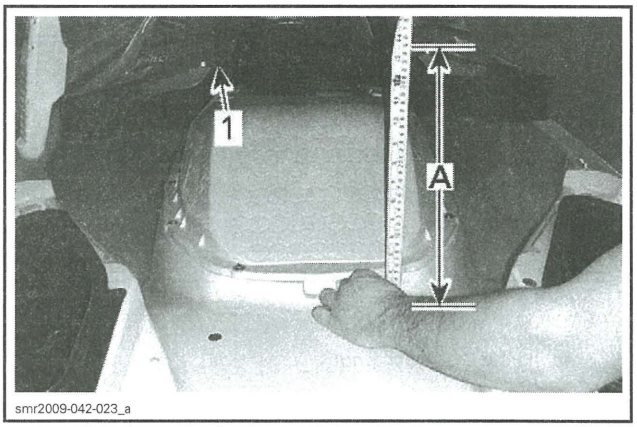

smr2009-042-023_a

1. Use this rivet as reference point
A. 340 mm (13-1/2 in)

10. Install two homemade alignment pins on suspension mounting plate.
    10.1 Take two M8 x 50 bolts and cut their heads.
    10.2 Grind down the cut ends to make a rounded shape.

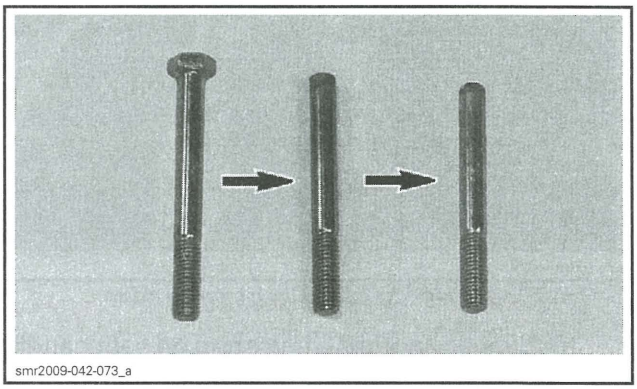
smr2009-042-073_a

    10.3 Install alignment pins into the 2 rear outside positions of suspension mounting plate.

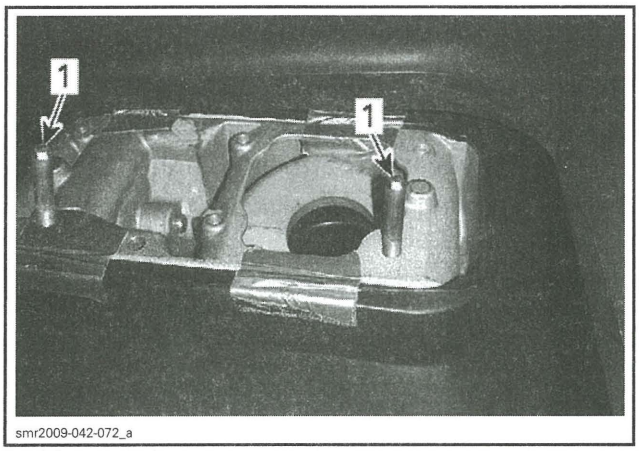

smr2009-042-072_a

1. Alignment pins

11. Position the moving deck so that alignment pins are aligned with suspension reinforcement plate holes.
12. Lower the moving deck over alignment pins.
13. Install **NEW** M8 screws to secure the moving deck to suspension mounting plate.

NOTE: Remove the alignment pins only when 2 screws are engaged in mounting plate.

14. Tighten screws to specification.

MOVING DECK RETAINING SCREWS TORQUE (M8)
25 N•m (18 lbf•ft)

15. Close seat.
16. Carefully lower and secure the rear suspension arm to the fixed deck.
    16.1 Position the rear suspension arm brackets in accordance with the reference marks previously drew on fixed deck.

    NOTICE **If no mark was trace, refer to *iS SUSPENSION* subsection for proper procedure to install and align the rear suspension arm.**

    16.2 Install **NEW** screws to secure rear suspension arm brackets.
    16.3 Tighten screws to specification.

REAR SUSPENSION ARM RETAINING SCREWS TORQUE
25 N•m (18 lbf•ft)

17. Remove rear lifting strap.
18. Attach steering cable to steering column.
19. Install gauge support. Refer to *INFORMATION CENTER (GAUGE)* subsection.
20. On aS models, install remote reservoir on moving deck.
21. Install **NEW** front carpets on foot wells and protective caps on moving deck.
22. Check steering alignment then tighten steering clamp bolts. Refer to *STEERING* subsection.

FRONT GRILLE (iS AND aS MODELS)

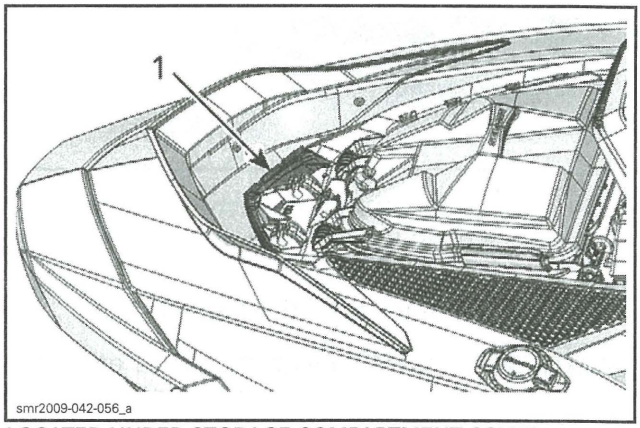

smr2009-042-056_a

LOCATED UNDER STORAGE COMPARTMENT COVER
1. Front grille

Front Grille Removal

1. Remove the *STORAGE COMPARTMENT COVER*, see procedure in this subsection.
2. Press on both tabs securing front grille to front body module.

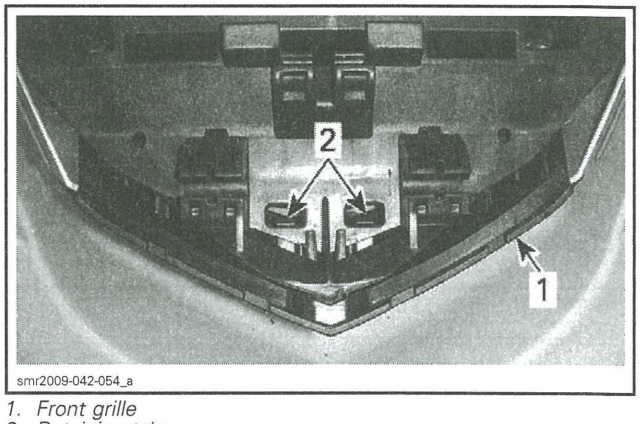

smr2009-042-054_a

1. Front grille
2. Retaining tabs

3. Remove grille.

Front Grille Installation

The installation is the reverse of the removal procedure.

SPLASH DEFLECTOR (iS AND aS MODELS)

Splash Deflector Removal

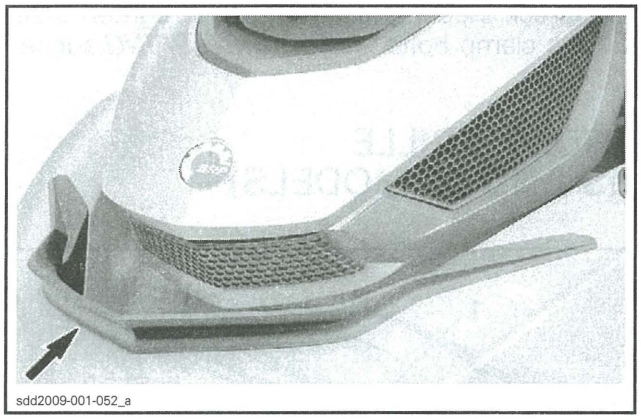
sdd2009-001-052_a

1. To remove the splash deflector, drill out the 4 rivets securing the splash deflector to the fixed deck.
2. Pull the deflector from the fixed deck.

NOTICE **A molded location pin at each end of the deflector are each inserted into the fixed deck. Be careful not to break them when removing the deflector.**

Splash Deflector Installation

1. Position the splash deflector over the forward end of the fixed deck and press the guide pins into the holes provided in the deck.
2. Install four new rivets to secure the deflector to the deck.

REAR VENTILATION BOX (iS AND aS MODELS)

Rear Ventilation Box Removal

1. Open seat.
2. Release all retaining latches.

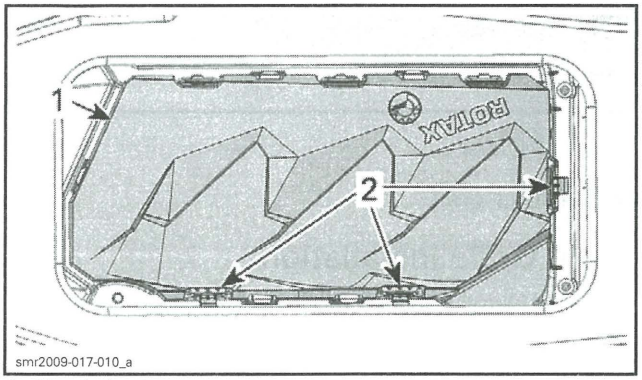

smr2009-017-010_a

1. Ventilation box
2. Retaining latches

3. Remove the ventilation box.

Rear Ventilation Box Installation

The installation is the reverse of the removal procedure. However, pay attention to the following.

Before installing the ventilation box, check the condition of its seal.

If the seal is damaged, replace the ventilation box as an assembly.

FRONT VENTILATION BOX (iS AND aS MODELS)

Front Ventilation Box Removal

1. Open the front storage cover and remove the storage basket.
2. Remove screws securing the ventilation box to fixed deck.

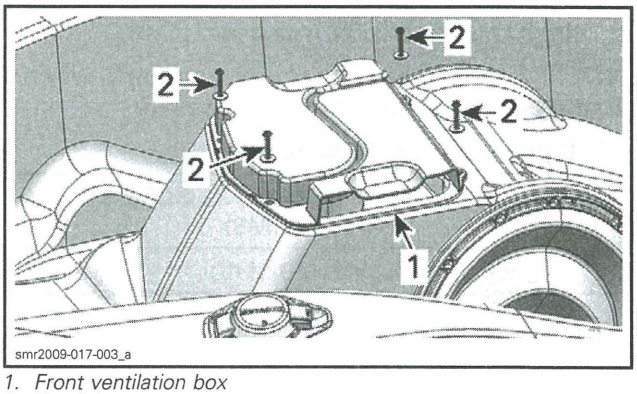

smr2009-017-003_a

1. Front ventilation box
2. Retaining screws

3. Remove the ventilation box.

Front Ventilation Box Installation

The installation is the reverse of the removal procedure. However, pay attention to the following.

Before installing the ventilation box, check the condition of its seal.

If the seal is damaged, replace the ventilation box.

Tighten ventilation box screws to specification.

VENTILATION BOX SCREWS TORQUE
1.2 N•m (11 lbf•**in**)

AIR INTAKE DUCT (iS AND aS MODELS)

Air Intake Duct Removal

Remove engine. Refer to *ENGINE REMOVAL AND INSTALLATION* subsection.

Remove the suspension base. Refer to *iS SUSPENSION* subsection.

Remove air intake duck from vehicle.

Air Intake Duct Installation

Install suspension base. Refer to *iS SUSPENSION* for complete procedure.

Install engine. Refer to *ENGINE REMOVAL AND INSTALLATION*.

After deck extension installation, tighten screws retaining the air intake duct to deck extension to specification.

AIR INTAKE DUCT RETAINING SCREWS TORQUE
1.2 N•m (11 lbf•**in**)

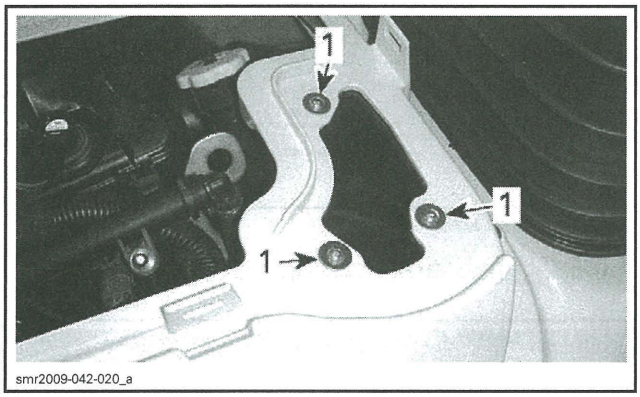

1. Air inlet retaining screws

REAR ACCESS PANELS (MODELS WITHOUT iS OR aS)

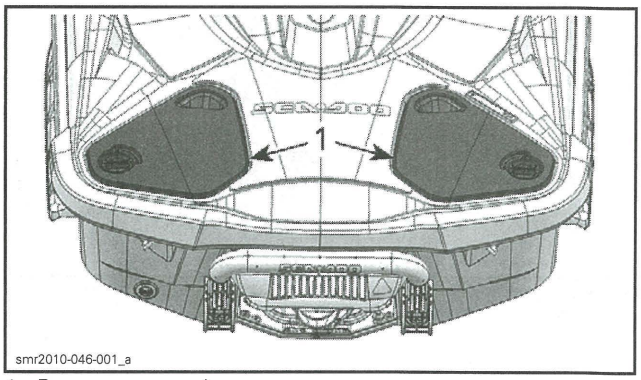

1. Rear access panels

Rear Access Panel Removal

Turn the lock handle to select the UNLOCK position.

- LH access panel: turn lock handle counterclockwise.
- RH access panel: turn lock handle clockwise.

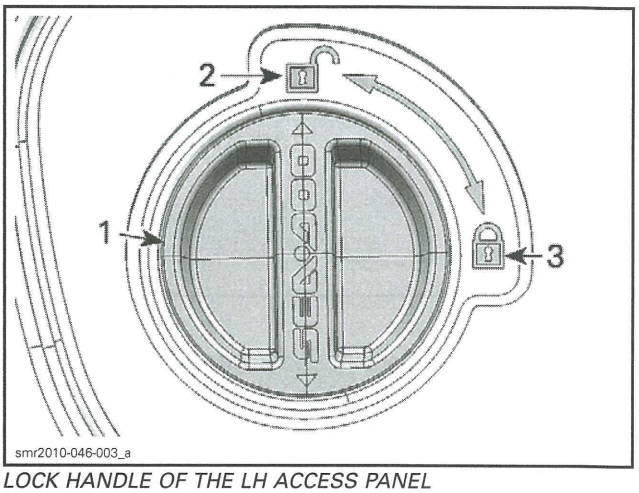

LOCK HANDLE OF THE LH ACCESS PANEL
1. Lock handle
2. UNLOCK position
3. LOCK position

RXT X

Open and remove the panel.

GTX 155, RXT 215 and WAKE Pro 215

Open the panel completely.

Move the bottom of the panel outwards to remove it.

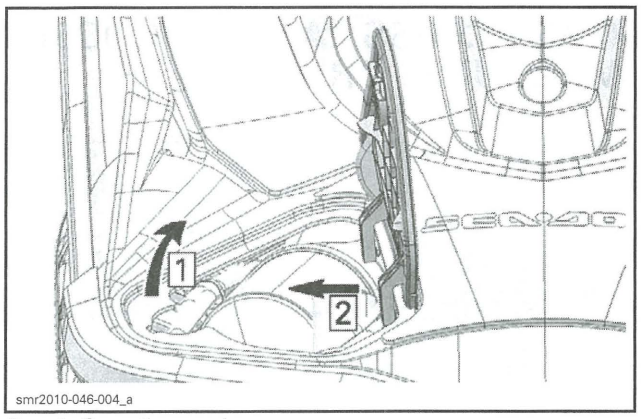

Step 1: Open the panel
Step 2: Move the panel outside

Rear Access Panel Installation

The installation is the reverse of the removal procedure. However, pay attention to the following.

GTX 155, RXT 215 and WAKE Pro 215

Insert rubber stoppers under the deck.

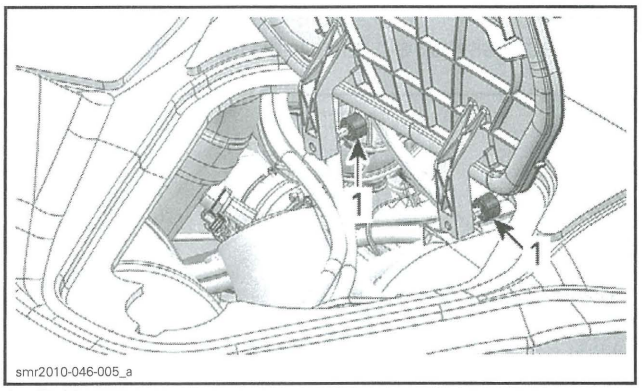

1. Rubber stoppers

Close the panel partially and center it into the deck cavity.

Press the corner, near the lock handle, against the deck and turn the lock handle in the LOCK position.

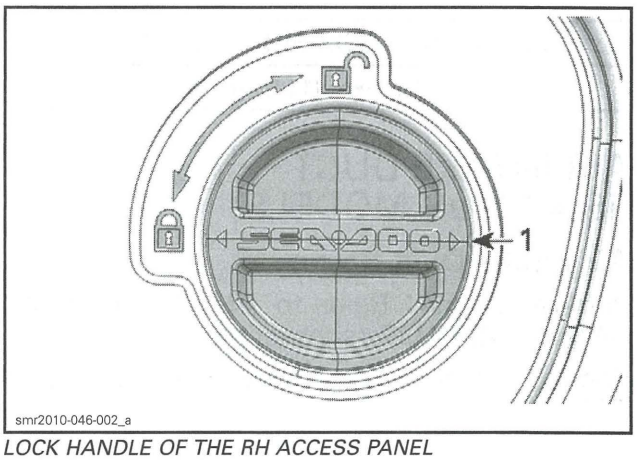

LOCK HANDLE OF THE RH ACCESS PANEL
1. Lock handle in LOCK position

WAKE PYLON (WAKE PRO 215)

Wake Pylon Removal

Open the seat.

Remove both lateral arms.

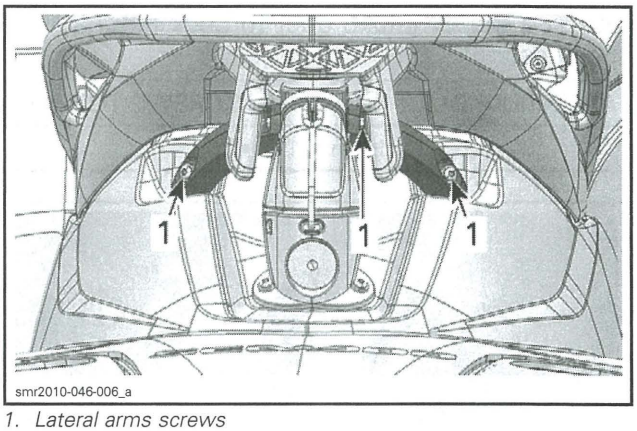

1. Lateral arms screws

Remove bolts at the bottom of wake pylon.

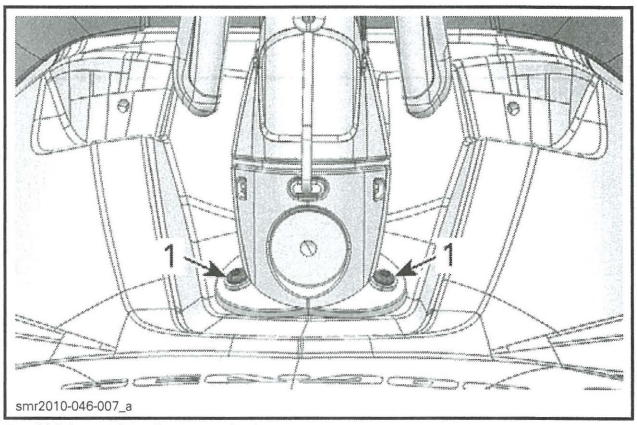

1. Wake pylon bottom bolts

Remove bolts securing the wake pylon support to body.

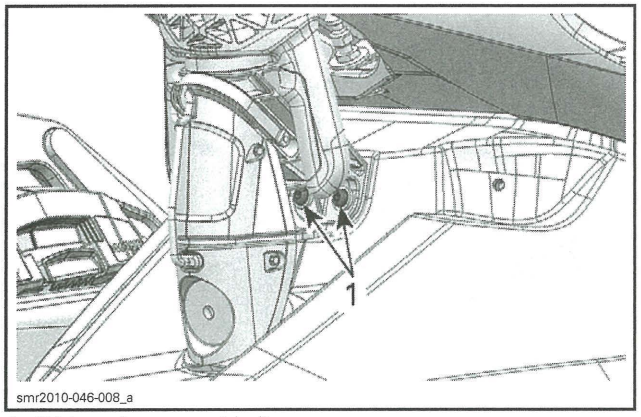

1. Wake pylon support bolts

Lift the wake pylon to disengage its bottom from the body.

Slide the bottom of the wake pylon rearward to remove the wake pylon from vehicle.

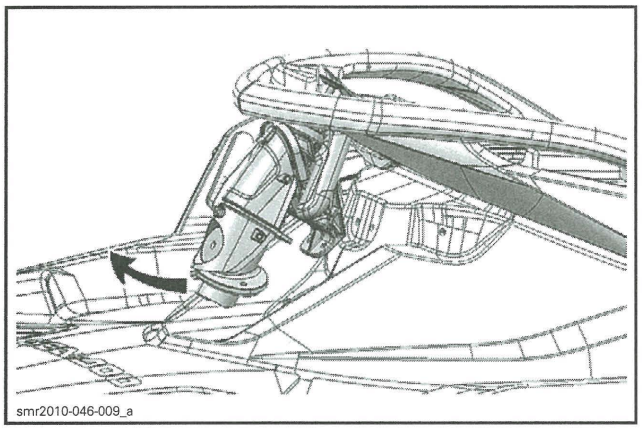

Wake Pylon Disassembly

Extend the handle completely.

Turn the wake pylon upside down.

Move both ends of locking strap to disengage the inner lock and free the handle.

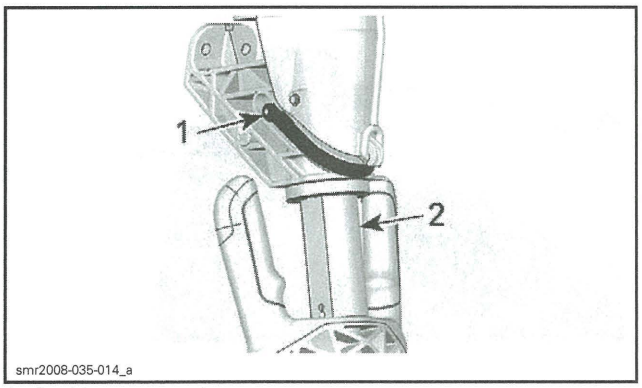

1. Locking strap end
2. Handle stem

Locking Strap

Using a screwdriver or any other suitable tool, detach a side of the locking strap from retaining pin.

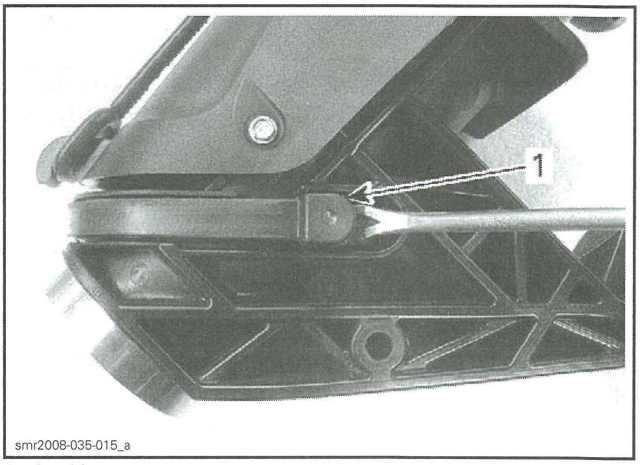

1. Locking strap

Remove locking strap and the inner lock.

Handle

Extend handle approximately 75 mm to 90 mm (3 in to 3-1/2 in).

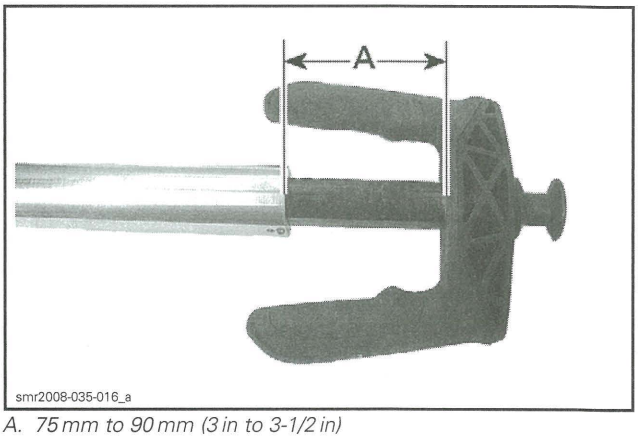

A. 75 mm to 90 mm (3 in to 3-1/2 in)

Insert two thin feeler gauges between handle stem and extension tube.

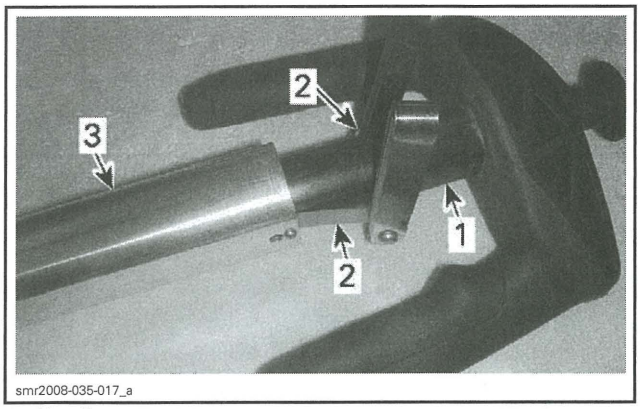

1. *Handle stem*
2. *Feeler gauges*
3. *Extension tube*

Place a rag around the joint to catch balls and spring.

Hold feeler gauges and pull the handle.

Wake Pylon Assembly

Handle

Install a loose locking tie on handle stem.

Apply XPS SYNTHETIC GREASE (P/N 293 550 010) on each ends of spring.

Insert the spring in the handle stem hole.

Position a ball on each ends of spring.

Install a feeler gauge over each balls.

Tighten the locking tie in order to retain feeler gauges and balls.

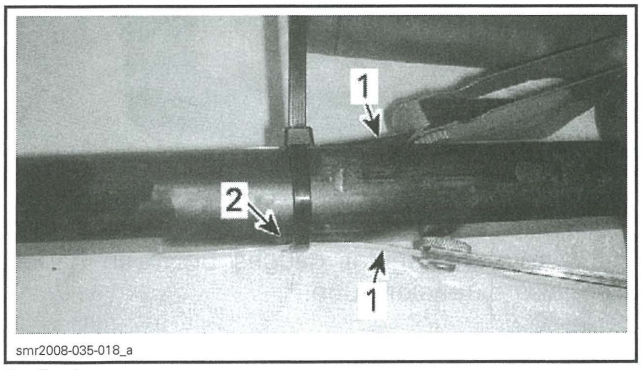

1. *Feeler gauges*
2. *Ball*

Apply XPS SYNTHETIC GREASE (P/N 293 550 010) in both recesses of the extension tube.

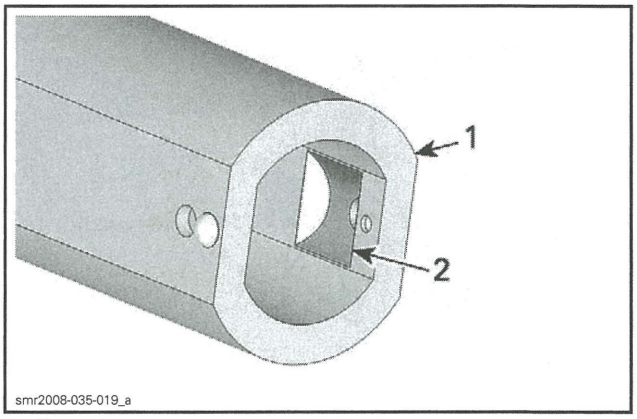

1. *Extension tube*
2. *Recesses*

Slide the handle stem into the extension tube.

Remove feeler gauges and locking tie.

Locking Strap

Remove the wake pylon trim.

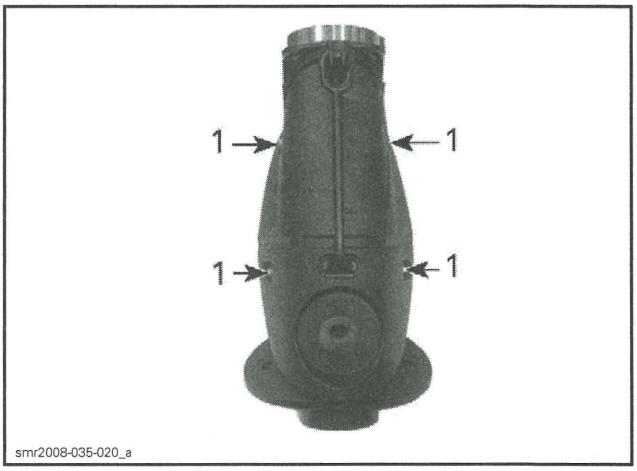

1. *Wake pylon trim screws*

Install lock and insert the end of the locking strap over the retaining pin.

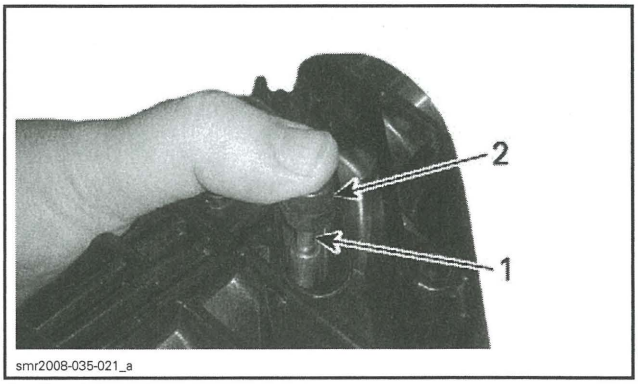

1. *Retaining pin*
2. *Locking strap*

Using a suitable tool, position the locking strap in its groove.

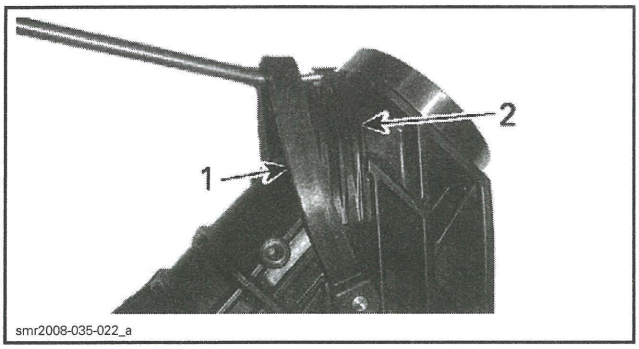

1. *Locking strap*
2. *Locking strap groove*

Reinstall the wake pylon trim.

Do not install the handle into wake pylon yet.

Wake Pylon Installation

Position the wake pylon on vehicle.

Install and secure wake pylon and lateral arms using previously removed fasteners and new elastic stop nuts.

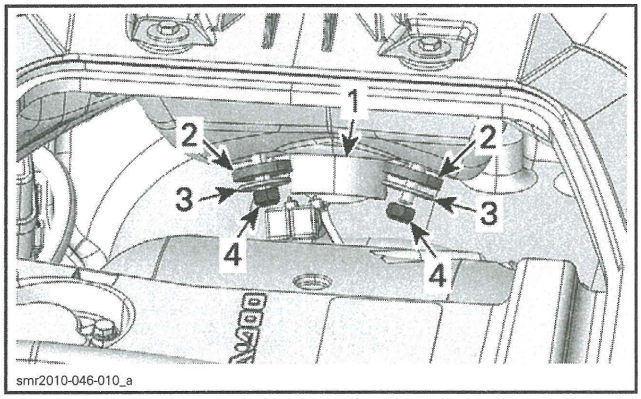

1. *Bottom of wake pylon*
2. *Rubber washers*
3. *Flat washers*
4. *New elastic stop nuts*

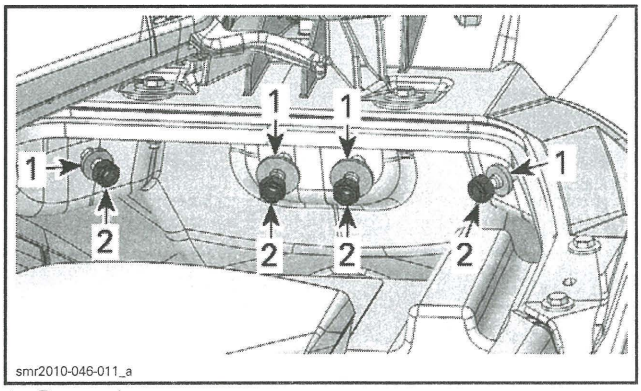

1. *Flat washers*
2. *New elastic stop nuts*

Tighten all bolts by hand.

Ensure base of wake pylon is well leaned against body.

Tighten all bolts as per the following sequence.

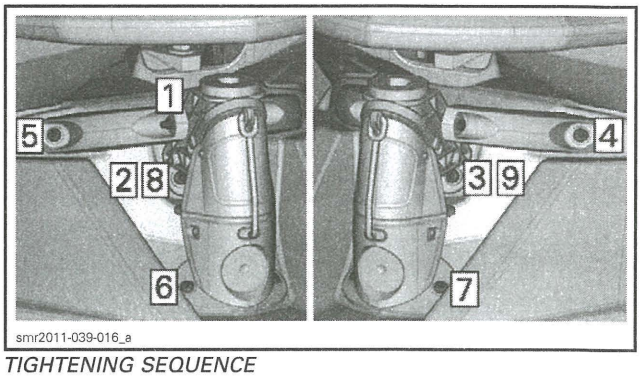

TIGHTENING SEQUENCE

Insert the handle into the wake pylon.

Move both ends of the locking strap forward to fully insert the handle.

GTS 130 AND GTI 130

MODEL			GTS 130 / GTI 130
ENGINE			
Engine type			ROTAX® 1503 4-TEC™, 4-stroke, Single Over Head Camshaft (SOHC)
Induction			Naturally-aspirated
Number of cylinders			3
Number of valves			12 valves with hydraulic lifters (no adjustment)
Bore			100 mm (3.9 in)
Stroke			63.4 mm (2.5 in)
Displacement			1 493.8 cm^3 (91 in^3)
Compression ratio			10.6:1
Maximum RPM			7300 RPM
Lubrication		Type	Dry sump (2 oil pumps). Replaceable oil filter. Water-cooled oil cooler
		Oil type	XPS synthetic blend oil (summer grade) (P/N 293 600 121). Refer to *LUBRICATION SYSTEM* subsection
		Capacity	3 L (3.2 qt (U.S. liq.)) oil change w/filter 4.5 L (4.8 qt (U.S. liq.)) total
Intake valve opening			10° ATDC
Intake valve closing			50° ABDC
Exhaust valve opening			50° BBDC
Exhaust valve closing			10° BTDC
Valve stem diameter	Intake	New	5.961 mm to 5.975 mm (.2347 in to .2352 in)
		Wear limit	5.930 mm (.233 in)
	Exhaust	New	5.946 mm to 5.960 mm (.2341 in to .2346 in)
		Wear limit	5.930 mm (.233 in)
Valve guide diameter		New	5.994 mm to 6.018 mm (.236 in to .2369 in)
		Wear limit	6.060 mm (.2386 in)
Valve spring free length	Inner	New	41.02 mm (1.615 in)
		Wear limit	38.80 mm (1.528 in)
	Outer	New	45.45 mm (1.789 in)
		Wear limit	43.00 mm (1.693 in)
Valve seat contact width	Intake	New	1.10 mm to 1.30 mm (.043 in to .051 in)
		Wear limit	1.60 mm (.063 in)
	Exhaust	New	1.25 mm to 1.55 mm (.049 in to .061 in)
		Wear limit	1.80 mm (.071 in)
Rocker arm inner diameter		New	20.007 mm to 20.020 mm (.7877 in to .7882 in)
		Wear limit	20.050 mm (.7894 in)
Rocker arm shaft diameter		New	19.980 mm to 19.993 mm (.7866 in to .7871 in)
		Wear limit	19.970 mm (.7862 in)
Cylinder head maximum warpage		Service limit	0.15 mm (.006 in)

MODEL			GTS 130 / GTI 130
ENGINE (cont'd)			
Piston ring type		1st	Upper compression ring, rectangular
		2nd	Lower compression ring, tapered face
		3rd	Oil scraper ring
Ring end gap	Rectangular	New	0.30 mm to 0.50 mm (.012 in to .02 in)
	Taper-face	New	0.35 mm to 0.55 mm (.014 in to .022 in)
	Oil scraper ring	New	0.35 mm to 0.50 mm (.014 in to .02 in)
	All	Wear limit	1.50 mm (.059 in)
Ring/piston groove clearance	Rectangular	New	0.025 mm to 0.070 mm (.001 in to .003 in)
	Taper-face	New	0.015 mm to 0.06 mm (.0006 in to .0024 in)
	Oil scraper ring	New	0.020 mm to 0.055 mm (.001 in to .002 in)
	All	Wear limit	0.15 mm (.006 in)
Piston/cylinder wall clearance		New	0.024 mm to 0.056 mm (.0009 in to .0022 in)
		Wear limit	0.100 mm (.0039 in)
Cylinder taper		Wear limit	0.100 mm (.0039 in)
Cylinder out of round (maximum)			0.015 mm (.0006 in)
Camshaft bearing journal diameter	Front	New	24.939 mm to 24.960 mm (.9819 in to .9827 in)
		Wear limit	24.910 mm (.9807 in)
	PTO and center	New	39.892 mm to 39.905 mm (1.5706 in to 1.5711 in)
		Wear limit	39.880 mm (1.5701 in)
Camshaft bearing inner diameter	Front	New	25.000 mm to 25.013 mm (.9843 in to .9848 in)
		Wear limit	25.050 mm (.9862 in)
	PTO and center	New	40.000 mm to 40.020 mm (1.5748 in to 1.5756 in)
		Wear limit	40.050 mm (1.5768 in)
Cam lobe height	Intake	New	31.540 mm to 31.740 mm (1.2417 in to 1.2496 in)
		Wear limit	31.50 mm (1.2402 in)
	Exhaust	New	31.430 mm to 31.630 mm (1.2374 in to 1.2453 in)
		Wear limit	31.380 mm (1.2354 in)
Crankshaft deflection		Maximum	0.05 mm (.002 in)
Crankshaft axial clearance		New	0.080 mm to 0.220 mm (.0031 in to .0087 in)
		Wear limit	0.35 mm (.014 in)
Crankshaft bearing journal diameter		New	49.991 mm to 50.000 mm (1.9681 in to 1.9685 in)
		Wear limit	49.950 mm (1.9665 in)
Crankshaft radial clearance		Wear limit	0.07 mm (.0028 in)
Connecting rod big end diameter		Service limit	45.080 mm (1.7748 in)
Connecting rod big end radial play		Service limit	0.090 mm (.0035 in)
Connecting rod big end axial play		New	0.100 mm to 0.352 mm (.004 in to .014 in)
		Wear limit	0.500 mm (.0197 in)
Connecting rod small end diameter		New	23.010 mm to 23.020 mm (.9059 in to .9063 in)
		Wear limit	23.070 mm (.9083 in)
Connecting rod small end radial play		Wear limit	0.080 mm (.0031 in)
Piston pin diameter		New	22.996 mm to 23.000 mm (.9054 in to .9055 in)
		Wear limit	22.990 mm (.9051 in)

MODEL			GTS 130 / GTI 130
ENGINE (cont'd)			
Balance shaft journal diameter		New	31.984 mm to 32.000 mm (1.2592 in to 1.2598 in)
		Wear limit	31.950 mm (1.2579 in)
Balance shaft radial clearance		Wear limit	0.070 mm (.0028 in)
Balance shaft axial clearance		New	0.020 mm to 0.250 mm (.0008 in to .0098 in)
Supercharger shaft driven plate journal depth		New	N.A.
		Wear limit	N.A.
Supercharger drive gear thickness		New	N.A.
		Wear limit	N.A.
Supercharger lock washer thickness		New	N.A.
		Wear limit	N.A.
Supercharger spring washer package height (not compressed)		New	N.A.
		Wear limit	N.A.
AIR INTAKE SYSTEM			
Intake spark arrester			Tubular, wire screen
COOLING SYSTEM			
Type			Closed loop cooling system
Coolant			Ethylene-glycol and distilled water (50%/50%). Use premix coolant from BRP or a coolant specially formulated for aluminum engines
Cooling system capacity			5.5 L (5.8 qt (U.S. liq.)) total
Thermostat			87°C (189°F)
Monitoring beeper setting			100°C (212°F)
EXHAUST SYSTEM			
Type			D-Sea-Bel sound reduction system. Water cooled/water injected (open loop). Direct flow from jet pump
Water injection in muffler			3 x 3.5 mm (.138 in) on exhaust pipe and 1 x 3.5 mm (.138 in) on muffler
FUEL SYSTEM			
Fuel injection type			Multipoint fuel injection with iTC (intelligent Throttle Control). Single throttle body (62 mm) with an actuator
Fuel pressure			386 kPa to 414 kPa (56 PSI to 60 PSI)
Fuel injector		Quantity	3
Fuel type	Inside North America ((RON + MON)/2)		87 or higher
	Outside North America (RON)		92 or higher
Fuel tank (including reserve)			60 L (15.9 U.S. gal.)
Fuel tank reserve (from low level signal)			approx. 12 L (3.2 U.S. gal.)
Idle speed			1750 ± 50 RPM (not adjustable)
ELECTRICAL SYSTEM			
Magneto generator output			360 W @ 6000 RPM
Stator			0.1 to 1.0 Ω
Battery			12 V, 30 A•h
Anti-start system			D.E.S.S. (Digitally Encoded Security System) with selectable maximum vehicle speed settings for RK (rental key) and LK (learning key)
Ignition system type			IDI (Inductive Discharge Ignition)

MODEL			GTS 130 / GTI 130
ELECTRICAL SYSTEM (cont'd)			
Ignition timing			Variable (electronically controlled)
Spark plug		Make and type	NGK DCPR8E
		Gap	0.7 mm to 0.8 mm (.028 in to .031 in)
Ignition coil		Primary	0.85 to 1.15 Ω
		Secondary	9.5 to 13.5 KΩ
Engine speed limiter setting			7650 RPM
Fuse box	#2: Diagnostic connector		15 A
	#3: START/STOP		3 A
	#4: GPS (if so equipped)		3 A
	#5: iBR power (except GTS models)		30 A
	#6: Voltage rectifier/regulator		30 A
	#8: Relay, fuses 2, 3 and 4		30 A
	#11: Depth sounder (if so equipped)		3 A
	#12: O.T.A.S., gauge start up and CAPS		3 A
	#13: Inj/Ign cyl 1		10 A
	#14: Inj/Ign cyl 2		10 A
	#15: Inj/Ign cyl 3		10 A
	#16: Starter solenoid		5 A
	#17: iBR control (except GTS models)		5 A
	#18: Fuel pump		10 A
	#19: ECM power		15 A
STEERING AND PROPULSION			
Steering			Fixed column
Steering nozzle pivoting angle			20°
O.T.A.S. (Off-Throttle Assisted Steering)			Electronically-controlled
Jet pump		Type	Axial flow single stage
		Grease type	Jet pump bearing grease (P/N 293 550 032)
Impeller		Rotation (seen from rear)	Counterclockwise
		Pitch	11°/18°
		Outside diameter	155.5 mm ± 0.06 mm (6.122 in ± .002 in)
Impeller/wear ring clearance		New	0 mm to 0.23 mm (0 in to .009 in)
		Wear limit	0.35 mm (.0138 in)
Impeller shaft		End play (new)	0
		Side play	0
Drive shaft		Coupling type	Crowned splines, direct drive
		Deflection (max.)	0.5 mm (.02 in)
Minimum required water level for propulsion system			90 cm (3 ft) underneath the lowest rear portion of hull

MODEL			GTS 130 / GTI 130
iBR and VTS			
Description	GTS 130		N.A.
	GTI 130		Intelligent Brake and Reverse activated by a LH lever. Electronically-controlled iBR gate to provide brake, reverse, neutral and forward position
Gate angle (from horizontal line of watercraft)	GTS 130	Forward	N.A.
		Neutral	
		Braking	
		Reverse	
	GTI 130	Forward	Approx. from +8° to -4°
		Neutral	Approx. -52°
		Braking	Approx. -70°
		Reverse	Approx. from -52° to -70°
VTS system			N.A.
VTS range angle			N.A.
Actuator			N.A.
WEIGHT AND LOADING CAPACITY			
Dry weight		GTS 130	339 kg (745 lb)
		GTI 130	343 kg (755 lb)
Number of passenger (driver incl.)			3
Load limit (passenger and 10 kg (22 lb) luggage)			272 kg (600 lb)
DIMENSIONS			
Overall length			336.8 cm (132.6 in)
Overall width			123.1 cm (48.5 in)
Overall height			111.8 cm (44 in)
MATERIALS			
Hull			Composite fiberglass
Inlet grate			Aluminum
Steering cover			Thermoplastic
Impeller material			Stainless steel
Impeller housing/stator			Aluminum/aluminum
Venturi			Aluminum
Nozzle			Aluminum
Fuel tank			Polyethylene
Seat			Polyurethane/foam
N.A.: Not Available			

GTI 155 AND WAKE 155

MODEL			GTI 155 / WAKE 155
ENGINE			
Engine type			ROTAX® 1503 4-TEC™, 4-stroke, Single Over Head Camshaft (SOHC)
Induction			Naturally-aspirated
Number of cylinders			3
Number of valves			12 valves with hydraulic lifters (no adjustment)
Bore			100 mm (3.9 in)
Stroke			63.4 mm (2.5 in)
Displacement			1 493.8 cm^3 (91 in^3)
Compression ratio			10.6:1
Maximum RPM			7300 RPM
Lubrication		Type	Dry sump (2 oil pumps). Replaceable oil filter. Water-cooled oil cooler
		Oil type	XPS synthetic blend oil (summer grade) (P/N 293 600 121). Refer to *LUBRICATION SYSTEM* subsection
		Capacity	3 L (3.2 qt (U.S. liq.)) oil change w/filter 4.5 L (4.8 qt (U.S. liq.)) total
Intake valve opening			0° BTDC
Intake valve closing			50° ABDC
Exhaust valve opening			50° BBDC
Exhaust valve closing			0° ATDC
Valve stem diameter	Intake	New	5.961 mm to 5.975 mm (.2347 in to .2352 in)
		Wear limit	5.930 mm (.233 in)
	Exhaust	New	5.946 mm to 5.960 mm (.2341 in to .2346 in)
		Wear limit	5.930 mm (.233 in)
Valve guide diameter		New	5.994 mm to 6.018 mm (.236 in to .2369 in)
		Wear limit	6.060 mm (.2386 in)
Valve spring free length	Inner	New	41.02 mm (1.615 in)
		Wear limit	38.80 mm (1.528 in)
	Outer	New	45.45 mm (1.789 in)
		Wear limit	43.00 mm (1.693 in)
Valve seat contact width	Intake	New	1.10 mm to 1.30 mm (.043 in to .051 in)
		Wear limit	1.60 mm (.063 in)
	Exhaust	New	1.25 mm to 1.55 mm (.049 in to .061 in)
		Wear limit	1.80 mm (.071 in)
Rocker arm inner diameter		New	20.007 mm to 20.020 mm (.7877 in to .7882 in)
		Wear limit	20.050 mm (.7894 in)
Rocker arm shaft diameter		New	19.980 mm to 19.993 mm (.7866 in to .7871 in)
		Wear limit	19.970 mm (.7862 in)
Cylinder head maximum warpage		Service limit	0.15 mm (.006 in)

MODEL			GTI 155 / WAKE 155
ENGINE (cont'd)			
Piston ring type		1st	Upper compression ring, rectangular
		2nd	Lower compression ring, tapered face
		3rd	Oil scraper ring
Ring end gap	Rectangular	New	0.30 mm to 0.50 mm (.012 in to .02 in)
	Taper-face	New	0.35 mm to 0.55 mm (.014 in to .022 in)
	Oil scraper ring	New	0.35 mm to 0.50 mm (.014 in to .02 in)
	All	Wear limit	1.50 mm (.059 in)
Ring/piston groove clearance	Rectangular	New	0.025 mm to 0.070 mm (.001 in to .003 in)
	Taper-face	New	0.015 mm to 0.06 mm (.0006 in to .0024 in)
	Oil scraper ring	New	0.020 mm to 0.055 mm (.001 in to .002 in)
	All	Wear limit	0.15 mm (.006 in)
Piston/cylinder wall clearance		New	0.024 mm to 0.056 mm (.0009 in to .0022 in)
		Wear limit	0.100 mm (.0039 in)
Cylinder taper		Wear limit	0.100 mm (.0039 in)
Cylinder out of round (maximum)			0.015 mm (.0006 in)
Camshaft bearing journal diameter	Front	New	24.939 mm to 24.960 mm (.9819 in to .9827 in)
		Wear limit	24.910 mm (.9807 in)
	PTO and center	New	39.892 mm to 39.905 mm (1.5706 in to 1.5711 in)
		Wear limit	39.880 mm (1.5701 in)
Camshaft bearing inner diameter	Front	New	25.000 mm to 25.013 mm (.9843 in to .9848 in)
		Wear limit	25.050 mm (.9862 in)
	PTO and center	New	40.000 mm to 40.020 mm (1.5748 in to 1.5756 in)
		Wear limit	40.050 mm (1.5768 in)
Cam lobe height	Intake	New	31.540 mm to 31.740 mm (1.2417 in to 1.2496 in)
		Wear limit	31.50 mm (1.2402 in)
	Exhaust	New	31.430 mm to 31.630 mm (1.2374 in to 1.2453 in)
		Wear limit	31.380 mm (1.2354 in)
Crankshaft deflection		Maximum	0.05 mm (.002 in)
Crankshaft axial clearance		New	0.080 mm to 0.220 mm (.0031 in to .0087 in)
		Wear limit	0.35 mm (.014 in)
Crankshaft bearing journal diameter		New	49.991 mm to 50.000 mm (1.9681 in to 1.9685 in)
		Wear limit	49.950 mm (1.9665 in)
Crankshaft radial clearance		Wear limit	0.07 mm (.0028 in)
Connecting rod big end diameter		Service limit	45.080 mm (1.7748 in)
Connecting rod big end radial play		Service limit	0.090 mm (.0035 in)
Connecting rod big end axial play		New	0.100 mm to 0.352 mm (.004 in to .014 in)
		Wear limit	0.500 mm (.0197 in)
Connecting rod small end diameter		New	23.010 mm to 23.020 mm (.9059 in to .9063 in)
		Wear limit	23.070 mm (.9083 in)
Connecting rod small end radial play		Wear limit	0.080 mm (.0031 in)
Piston pin diameter		New	22.996 mm to 23.000 mm (.9054 in to .9055 in)
		Wear limit	22.990 mm (.9051 in)

MODEL			GTI 155 / WAKE 155
ENGINE (cont'd)			
Balance shaft journal diameter		New	31.984 mm to 32.000 mm (1.2592 in to 1.2598 in)
		Wear limit	31.950 mm (1.2579 in)
Balance shaft radial clearance		Wear limit	0.070 mm (.0028 in)
Balance shaft axial clearance		New	0.020 mm to 0.250 mm (.0008 in to .0098 in)
Supercharger shaft driven plate journal depth		New	N.A.
		Wear limit	N.A.
Supercharger drive gear thickness		New	N.A.
		Wear limit	N.A.
Supercharger lock washer thickness		New	N.A.
		Wear limit	N.A.
Supercharger spring washer package height (not compressed)		New	N.A.
		Wear limit	N.A.
AIR INTAKE SYSTEM			
Intake spark arrester			Tubular, wire screen
COOLING SYSTEM			
Type			Closed loop cooling system
Coolant			Ethylene-glycol and distilled water (50%/50%). Use premix coolant from BRP or a coolant specially formulated for aluminum engines
Cooling system capacity			5.5 L (5.8 qt (U.S. liq.)) total
Thermostat			87°C (189°F)
Monitoring beeper setting			100°C (212°F)
EXHAUST SYSTEM			
Type			D-Sea-Bel sound reduction system. Water cooled/water injected (open loop). Direct flow from jet pump
Water injection in muffler			3 x 3.5 mm (.138 in) on exhaust pipe and 1 x 3.5 mm (.138 in) on muffler
FUEL SYSTEM			
Fuel injection type			Multipoint fuel injection with iTC (intelligent Throttle Control). Single throttle body (62 mm) with an actuator
Fuel pressure			386 kPa to 414 kPa (56 PSI to 60 PSI)
Fuel injector		Quantity	3
Fuel type	Inside North America ((RON + MON)/2)		87 or higher
	Outside North America (RON)		92 or higher
Fuel tank (including reserve)			60 L (15.9 U.S. gal.)
Fuel tank reserve (from low level signal)			approx. 12 L (3.2 U.S. gal.)
Idle speed			1800 ± 50 RPM (not adjustable)
ELECTRICAL SYSTEM			
Magneto generator output			360 W @ 6000 RPM
Stator			0.1 to 1.0 Ω
Battery			12 V, 30 A•h
Anti-start system			D.E.S.S. (Digitally Encoded Security System) with selectable maximum vehicle speed settings for RK (rental key) and LK (learning key)

MODEL			GTI 155 / WAKE 155
ELECTRICAL SYSTEM (cont'd)			
Ignition system type			IDI (Inductive Discharge Ignition)
Ignition timing			Variable (electronically controlled)
Spark plug		Make and type	NGK DCPR8E
		Gap	0.7 mm to 0.8 mm (.028 in to .031 in)
Ignition coil		Primary	0.85 to 1.15 Ω
		Secondary	9.5 to 13.5 KΩ
Engine speed limiter setting			7750 RPM
Fuse box	#2: Diagnostic connector		15 A
	#3: START/STOP		3 A
	#4: GPS (if so equipped)		3 A
	#5: iBR power		30 A
	#6: Voltage rectifier/regulator		30 A
	#8: Relay, fuses 2, 3 and 4		30 A
	#11: Depth sounder (if so equipped)		3 A
	#12: O.T.A.S., gauge start up and CAPS		3 A
	#13: Inj/Ign cyl 1		10 A
	#14: Inj/Ign cyl 2		10 A
	#15: Inj/Ign cyl 3		10 A
	#16: Starter solenoid		5 A
	#17: iBR control		5 A
	#18: Fuel pump		10 A
	#19: ECM power		15 A
STEERING AND PROPULSION			
Steering			Fixed column
Steering nozzle pivoting angle			20°
O.T.A.S. (Off-Throttle Assisted Steering)			Electronically-controlled
Jet pump		Type	Axial flow single stage
		Grease type	Jet pump bearing grease (P/N 293 550 032)
Impeller		Rotation (seen from rear)	Counterclockwise
		Pitch	11°/18°
		Outside diameter	155.5 mm ± 0.06 mm (6.122 in ± .002 in)
Impeller/wear ring clearance		New	0 mm to 0.23 mm (0 in to .009 in)
		Wear limit	0.35 mm (.0138 in)
Impeller shaft		End play (new)	0
		Side play	0
Drive shaft		Coupling type	Crowned splines, direct drive
		Deflection (max.)	0.5 mm (.02 in)
Minimum required water level for propulsion system			90 cm (3 ft) underneath the lowest rear portion of hull

MODEL		GTI 155 / WAKE 155
iBR and VTS		
Description		Intelligent Brake and Reverse activated by a LH lever. Electronically-controlled iBR gate to provide brake, reverse, neutral and forward position
Gate angle (from horizontal line of watercraft)	Forward	Approx. from +8° to -4°
	Neutral	Approx. -52°
	Braking	Approx. -70°
	Reverse	Approx. from -52° to -70°
VTS system		Yes
VTS range angle		Approx. from +8° to -4°
Actuator		12 V, 80 A max. capacity. Reversible PWM (pulse-width modulation) motor
WEIGHT AND LOADING CAPACITY		
Dry weight	GTI 155	343 kg (755 lb)
	WAKE 155	348 kg (765 lb)
Number of passenger (driver incl.)		3
Load limit (passenger and 10 kg (22 lb) luggage)		272 kg (600 lb)
DIMENSIONS		
Overall length		336.8 cm (132.6 in)
Overall width		123.1 cm (48.5 in)
Overall height		111.8 cm (44 in)
MATERIALS		
Hull		Composite fiberglass
Inlet grate		Aluminum
Steering cover		Thermoplastic
Impeller material		Stainless steel
Impeller housing/stator		Aluminum/aluminum
Venturi		Aluminum
Nozzle		Aluminum
Fuel tank		Polyethylene
Seat		Polyurethane/foam
N.A.: Not Available		

GTR 215

MODEL			GTR 215
ENGINE			
Engine type			ROTAX® 1503 4-TEC™, 4-stroke, Single Over Head Camshaft (SOHC)
Induction			Supercharged intercooled
Number of cylinders			3
Number of valves			12 valves with hydraulic lifters (no adjustment)
Bore			100 mm (3.9 in)
Stroke			63.4 mm (2.5 in)
Displacement			1 493.8 cm^3 (91 in^3)
Compression ratio			8.4:1
Maximum RPM			8000 RPM
Lubrication		Type	Dry sump (2 oil pumps). Replaceable oil filter. Water-cooled oil cooler
		Oil type	XPS synthetic blend oil (summer grade) (P/N 293 600 121). Refer to *LUBRICATION SYSTEM* subsection
		Capacity	3 L (3.2 qt (U.S. liq.)) oil change w/filter 4.5 L (4.8 qt (U.S. liq.)) tota
Intake valve opening			0° BTDC
Intake valve closing			50° ABDC
Exhaust valve opening			50° BBDC
Exhaust valve closing			0° ATDC
Valve stem diameter	Intake	New	5.961 mm to 5.975 mm (.2347 in to .2352 in)
		Wear limit	5.930 mm (.233 in)
	Exhaust	New	5.946 mm to 5.960 mm (.2341 in to .2346 in)
		Wear limit	5.930 mm (.233 in)
Valve guide diameter		New	5.994 mm to 6.018 mm (.236 in to .2369 in)
		Wear limit	6.060 mm (.2386 in)
Valve spring free length	Inner	New	41.02 mm (1.615 in)
		Wear limit	38.80 mm (1.528 in)
	Outer	New	45.45 mm (1.789 in)
		Wear limit	43.00 mm (1.693 in)
Valve seat contact width	Intake	New	1.10 mm to 1.30 mm (.043 in to .051 in)
		Wear limit	1.60 mm (.063 in)
	Exhaust	New	1.25 mm to 1.55 mm (.049 in to .061 in)
		Wear limit	1.80 mm (.071 in)
Rocker arm inner diameter		New	20.007 mm to 20.020 mm (.7877 in to .7882 in)
		Wear limit	20.050 mm (.7894 in)
Rocker arm shaft diameter		New	19.980 mm to 19.993 mm (.7866 in to .7871 in)
		Wear limit	19.970 mm (.7862 in)
Cylinder head maximum warpage		Service limit	0.15 mm (.006 in)
Piston ring type		1st	Upper compression ring, rectangular
		2nd	Lower compression ring, tapered face
		3rd	Oil scraper ring

MODEL			GTR 215
ENGINE (cont'd)			
Ring end gap	Rectangular	New	0.30 mm to 0.50 mm (.012 in to .02 in)
	Taper-face	New	0.35 mm to 0.55 mm (.014 in to .022 in)
	Oil scraper ring	New	0.35 mm to 0.50 mm (.014 in to .02 in)
	All	Wear limit	1.50 mm (.059 in)
Ring/piston groove clearance	Rectangular	New	0.025 mm to 0.070 mm (.001 in to .003 in)
	Taper-face	New	0.015 mm to 0.06 mm (.0006 in to .0024 in)
	Oil scraper ring	New	0.020 mm to 0.055 mm (.001 in to .002 in)
	All	Wear limit	0.15 mm (.006 in)
Piston/cylinder wall clearance		New	0.04 mm to 0.08 mm (.0016 in to .0031 in)
		Wear limit	0.100 mm (.0039 in)
Cylinder taper		Wear limit	0.100 mm (.0039 in)
Cylinder out of round (maximum)			0.015 mm (.0006 in)
Camshaft bearing journal diameter	Front	New	24.939 mm to 24.960 mm (.9819 in to .9827 in)
		Wear limit	24.910 mm (.9807 in)
	PTO and center	New	39.892 mm to 39.905 mm (1.5706 in to 1.5711 in)
		Wear limit	39.880 mm (1.5701 in)
Camshaft bearing inner diameter	Front	New	25.000 mm to 25.013 mm (.9843 in to .9848 in)
		Wear limit	25.050 mm (.9862 in)
	PTO and center	New	40.000 mm to 40.020 mm (1.5748 in to 1.5756 in)
		Wear limit	40.050 mm (1.5768 in)
Cam lobe height	Intake	New	31.540 mm to 31.740 mm (1.2417 in to 1.2496 in)
		Wear limit	31.50 mm (1.2402 in)
	Exhaust	New	31.430 mm to 31.630 mm (1.2374 in to 1.2453 in)
		Wear limit	31.380 mm (1.2354 in)
Crankshaft deflection		Maximum	0.05 mm (.002 in)
Crankshaft axial clearance		New	0.080 mm to 0.220 mm (.0031 in to .0087 in)
		Wear limit	0.35 mm (.014 in)
Crankshaft bearing journal diameter		New	49.991 mm to 50.000 mm (1.9681 in to 1.9685 in)
		Wear limit	49.950 mm (1.9665 in)
Crankshaft radial clearance		Wear limit	0.07 mm (.0028 in)
Connecting rod big end diameter		Service limit	45.080 mm (1.7748 in)
Connecting rod big end radial play		Service limit	0.090 mm (.0035 in)
Connecting rod big end axial play		New	0.100 mm to 0.352 mm (.004 in to .014 in)
		Wear limit	0.500 mm (.0197 in)
Connecting rod small end diameter		New	23.010 mm to 23.020 mm (.9059 in to .9063 in)
		Wear limit	23.070 mm (.9083 in)
Connecting rod small end radial play		Wear limit	0.080 mm (.0031 in)
Piston pin diameter		New	22.996 mm to 23.000 mm (.9054 in to .9055 in)
		Wear limit	22.990 mm (.9051 in)
Balance shaft journal diameter		New	31.984 mm to 32.000 mm (1.2592 in to 1.2598 in)
		Wear limit	31.950 mm (1.2579 in)
Balance shaft radial clearance		Wear limit	0.070 mm (.0028 in)
Balance shaft axial clearance		New	0.020 mm to 0.250 mm (.0008 in to .0098 in)

MODEL			GTR 215
ENGINE (cont'd)			
Supercharger shaft driven plate journal depth		New	14.460 mm to 14.500 mm (.5693 in to .5709 in)
		Wear limit	14.600 mm (.5748 in)
Supercharger drive gear thickness		New	11.000 mm to 11.050 mm (.4331 in to .435 in)
		Wear limit	10.900 mm (.4291 in)
Supercharger lock washer thickness		New	4.050 mm to 4.150 mm (.1594 in to .1634 in)
		Wear limit	3.950 mm (.1555 in)
Supercharger spring washer package height (not compressed)		New	10.900 mm to 10.700 mm (.4291 in to .4213 in)
		Wear limit	10.200 mm (.4016 in)
AIR INTAKE SYSTEM			
Intake spark arrester			Tubular, wire screen
COOLING SYSTEM			
Type			Closed loop cooling system
Coolant			Ethylene-glycol and distilled water (50%/50%). Use premix coolant from BRP or a coolant specially formulated for aluminum engines
Cooling system capacity			5.5 L (5.8 qt (U.S. liq.)) total
Thermostat			87°C (189°F)
Monitoring beeper setting			100°C (212°F)
EXHAUST SYSTEM			
Type			D-Sea-Bel sound reduction system. Water cooled/water injected (open loop). Direct flow from jet pump
Water injection in muffler			3 x 3.5 mm (.138 in) on exhaust pipe and 1 x 3.5 mm (.138 in) on muffler
FUEL SYSTEM			
Fuel injection type			Multipoint fuel injection with iTC (intelligent Throttle Control). Single throttle body (62 mm) with an actuator
Fuel pressure			386 kPa to 414 kPa (56 PSI to 60 PSI)
Fuel injector		Quantity	3
Fuel type	Inside North America ((RON + MON)/2)		91 or higher
	Outside North America (RON)		95 or higher
Fuel tank (including reserve)			60 L (16 U.S. gal.)
Fuel tank reserve (from low level signal)			approx. 12 L (3.2 U.S. gal.)
Idle speed			1800 ± 50 RPM (not adjustable)
ELECTRICAL SYSTEM			
Magneto generator output			360 W @ 6000 RPM
Stator			0.1 to 1.0 Ω
Battery			12 V, 30 A•h
Anti-start system			D.E.S.S. (Digitally Encoded Security System) with selectable maximum vehicle speed settings for RK (rental key) and LK (learning key)
Ignition system type			IDI (Inductive Discharge Ignition)
Ignition timing			Variable (electronically controlled)
Spark plug		Make and type	NGK DCPR8E
		Gap	0.7 mm to 0.8 mm (.028 in to .031 in)
Ignition coil		Primary	0.85 to 1.15 Ω
		Secondary	9.5 to 13.5 KΩ

MODEL			GTR 215
ELECTRICAL SYSTEM (cont'd)			
Engine speed limiter setting			8300 RPM
Fuse box	#2: Diagnostic connector		15 A
	#3: START/STOP		3 A
	#4: GPS (If so equipped)		3 A
	#5: iBR power		30 A
	#6: Voltage rectifier/regulator		30 A
	#8: IFuses 2, 3, 4 and relay		30 A
	#11: Depth sounder		3 A
	#12 O.T.A.S., Gauge start up, CAPS		3 A
	#13: Inj/Ign cyl 1		10 A
	#14: Inj/Ign cyl 2		10 A
	#15: Inj/Ign cyl 3		10 A
	#16: Starter solenoid		5 A
	#17: iBR control		5 A
	#18: Fuel pump		10 A
	#19: ECM power		15 A
STEERING AND PROPULSION			
Steering			Adjustable 4 positions
Steering nozzle pivoting angle			26°
O.T.A.S. (Off-Throttle Assisted Steering)			Electronically-controlled
Jet pump		Type	Axial flow single stage
		Grease type	Jet pump bearing grease (P/N 293 550 032)
Impeller		Rotation (seen from rear)	Counterclockwise
		Pitch	10°/21°
		Outside diameter	159 mm ± 0.06 mm (6.26 in ± .002 in)
Impeller/wear ring clearance		New	0 mm to 0.23 mm (0 in to .009 in)
		Wear limit	0.35 mm (.0138 in)
Impeller shaft		End play (new)	0
		Side play	0
Drive shaft		Coupling type	Crowned splines, direct drive
		Deflection (max.)	0.5 mm (.02 in)
Minimum required water level for propulsion system			90 cm (3 ft) underneath the lowest rear portion of hull

MODEL		GTR 215
iBR and VTS		
Description		Intelligent Brake and Reverse activated by a LH lever. Electronically-controlled iBR gate to provide brake, reverse, neutral and forward position
Gate angle (from horizontal line of watercraft)	Forward	Approx. from +8° to -4°
	Neutral	Approx. -52°
	Braking	Approx. -70°
	Reverse	Approx. from -52° to -70°
VTS system		Yes
VTS range angle		8° up, -4° down
Actuator		12 V, 80 A max. capacity. Reversible PWM (pulse-width modulation) motor
WEIGHT AND LOADING CAPACITY		
Dry weight		348 kg (765 lb)
Number of passenger (driver incl.)		3
Load limit (passenger and 10 kg (22 lb) luggage)		272 kg (600 lb)
DIMENSIONS		
Overall length		336.8 cm (133 in)
Overall width		123.1 cm (48 in)
Overall height		111.8 cm (44.02 in)
Overall height with keel horizontal, suspension extended		N.A.
Overall height with keel horizontal, suspension collapsed		N.A.
MATERIALS		
Hull		Composite fiberglass
Inlet grate		Aluminum
Steering cover		Thermoplastic
Impeller material		Stainless steel
Impeller housing/stator		Aluminum/aluminum
Venturi		Aluminum
Nozzle		Aluminum
Fuel tank		Polyethylene
Seat		Polyurethane/foam
N.A.: Not Available		

GTX 155/215/260

MODEL			GTX 155 / GTX S 155 / GTX 215 / GTX LTD iS 260
ENGINE			
Engine type			ROTAX® 1503 4-TEC™, 4-stroke, Single Over Head Camshaft (SOHC)
Induction		GTX 155	Naturally-aspirated
		GTX S 155	
		GTX 215	Supercharged intercooled
		GTX LTD iS 260	
Number of cylinders			3
Number of valves			12 valves with hydraulic lifters (no adjustment)
Bore			100 mm (3.9 in)
Stroke			63.4 mm (2.5 in)
Displacement			1 493.8 cm³ (91 in³)
Compression ratio		GTX 155	10.6:1
		GTX S 155	
		GTX 215	8.4:1
		GTX LTD iS 260	
Maximum RPM		GTX 155	7300 RPM
		GTX S 155	
		GTX 215	8000 RPM
		GTX LTD iS 260	
Lubrication		Type	Dry sump (2 oil pumps). Replaceable oil filter. Water-cooled oil cooler
		Oil type	XPS synthetic blend oil (summer grade) (P/N 293 600 121). Refer to *LUBRICATION SYSTEM* subsection
		Capacity	3 L (3.2 qt (U.S. liq.)) oil change w/filter 4.5 L (4.8 qt (U.S. liq.)) total
Intake valve opening			0° BTDC
Intake valve closing			50° ABDC
Exhaust valve opening			50° BBDC
Exhaust valve closing			0° ATDC
Valve stem diameter	Intake	New	5.961 mm to 5.975 mm (.2347 in to .2352 in)
		Wear limit	5.930 mm (.233 in)
	Exhaust	New	5.946 mm to 5.960 mm (.2341 in to .2346 in)
		Wear limit	5.930 mm (.233 in)
Valve guide diameter		New	5.994 mm to 6.018 mm (.236 in to .2369 in)
		Wear limit	6.060 mm (.2386 in)
Valve spring free length	Inner	New	41.02 mm (1.615 in)
		Wear limit	38.80 mm (1.528 in)
	Outer	New	45.45 mm (1.789 in)
		Wear limit	43.00 mm (1.693 in)

MODEL			GTX 155 / GTX S 155 / GTX 215 / GTX LTD iS 260
ENGINE (cont'd)			
Valve seat contact width	Intake	New	1.10 mm to 1.30 mm (.043 in to .051 in)
		Wear limit	1.60 mm (.063 in)
	Exhaust	New	1.25 mm to 1.55 mm (.049 in to .061 in)
		Wear limit	1.80 mm (.071 in)
Rocker arm inner diameter		New	20.007 mm to 20.020 mm (.7877 in to .7882 in)
		Wear limit	20.050 mm (.7894 in)
Rocker arm shaft diameter		New	19.980 mm to 19.993 mm (.7866 in to .7871 in)
		Wear limit	19.970 mm (.7862 in)
Cylinder head maximum warpage		Service limit	0.15 mm (.006 in)
Piston ring type		1st	Upper compression ring, rectangular
		2nd	Lower compression ring, tapered face
		3rd	Oil scraper ring
Ring end gap	Rectangular	New	0.30 mm to 0.50 mm (.012 in to .02 in)
	Taper-face	New	0.35 mm to 0.55 mm (.014 in to .022 in)
	Oil scraper ring	New	0.35 mm to 0.50 mm (.014 in to .02 in)
	All	Wear limit	1.50 mm (.059 in)
Ring/piston groove clearance	Rectangular	New	0.025 mm to 0.070 mm (.001 in to .003 in)
	Taper-face	New	0.015 mm to 0.06 mm (.0006 in to .0024 in)
	Oil scraper ring	New	0.020 mm to 0.055 mm (.001 in to .002 in)
	All	Wear limit	0.15 mm (.006 in)
Piston/cylinder wall clearance	New	GTX 155	0.024 mm to 0.056 mm (.0009 in to .0022 in)
		GTX S 155	
		GTX 215	0.04 mm to 0.08 mm (.0016 in to .0031 in)
		GTX LTD iS 260	
		Wear limit	0.100 mm (.0039 in)
Cylinder taper		Wear limit	0.100 mm (.0039 in)
Cylinder out of round (maximum)			0.015 mm (.0006 in)
Camshaft bearing journal diameter	Front	New	24.939 mm to 24.960 mm (.9819 in to .9827 in)
		Wear limit	24.910 mm (.9807 in)
	PTO and center	New	39.892 mm to 39.905 mm (1.5706 in to 1.5711 in)
		Wear limit	39.880 mm (1.5701 in)
Camshaft bearing inner diameter	Front	New	25.000 mm to 25.013 mm (.9843 in to .9848 in)
		Wear limit	25.050 mm (.9862 in)
	PTO and center	New	40.000 mm to 40.020 mm (1.5748 in to 1.5756 in)
		Wear limit	40.050 mm (1.5768 in)
Cam lobe height	Intake	New	31.540 mm to 31.740 mm (1.2417 in to 1.2496 in)
		Wear limit	31.50 mm (1.2402 in)
	Exhaust	New	31.430 mm to 31.630 mm (1.2374 in to 1.2453 in)
		Wear limit	31.380 mm (1.2354 in)
Crankshaft deflection		Maximum	0.05 mm (.002 in)
Crankshaft axial clearance		New	0.080 mm to 0.220 mm (.0031 in to .0087 in)
		Wear limit	0.35 mm (.014 in)

MODEL			GTX 155 / GTX S 155 / GTX 215 / GTX LTD iS 260
ENGINE (cont'd)			
Crankshaft bearing journal diameter		New	49.991 mm to 50.000 mm (1.9681 in to 1.9685 in)
		Wear limit	49.950 mm (1.9665 in)
Crankshaft radial clearance		Wear limit	0.07 mm (.0028 in)
Connecting rod big end diameter		Service limit	45.080 mm (1.7748 in)
Connecting rod big end radial play		Service limit	0.090 mm (.0035 in)
Connecting rod big end axial play		New	0.100 mm to 0.352 mm (.004 in to .014 in)
		Wear limit	0.500 mm (.0197 in)
Connecting rod small end diameter		New	23.010 mm to 23.020 mm (.9059 in to .9063 in)
		Wear limit	23.070 mm (.9083 in)
Connecting rod small end radial play		Wear limit	0.080 mm (.0031 in)
Piston pin diameter		New	22.996 mm to 23.000 mm (.9054 in to .9055 in)
		Wear limit	22.990 mm (.9051 in)
Balance shaft journal diameter		New	31.984 mm to 32.000 mm (1.2592 in to 1.2598 in)
		Wear limit	31.950 mm (1.2579 in)
Balance shaft radial clearance		Wear limit	0.070 mm (.0028 in)
Balance shaft axial clearance		New	0.020 mm to 0.250 mm (.0008 in to .0098 in)
Supercharger shaft driven plate journal depth	New	GTX 215	14.460 mm to 14.500 mm (.5693 in to .5709 in)
		GTX LTD iS 260	
	Wear limit	GTX 215	14.600 mm (.5748 in)
		GTX LTD iS 260	
Supercharger drive gear thickness	New	GTX 215	11.000 mm to 11.050 mm (.4331 in to .435 in)
		GTX LTD iS 260	
	Wear limit	GTX 215	10.900 mm (.4291 in)
		GTX LTD iS 260	
Supercharger lock washer thickness	New	GTX 215	4.050 mm to 4.150 mm (.1594 in to .1634 in)
		GTX LTD iS 260	
	Wear limit	GTX 215	3.950 mm (.1555 in)
		GTX LTD iS 260	
Supercharger spring washer package height (not compressed)	New	GTX 215	10.900 mm to 10.700 mm (.4291 in to .4213 in)
		GTX LTD iS 260	
	Wear limit	GTX 215	10.200 mm (.4016 in)
		GTX LTD iS 260	
AIR INTAKE SYSTEM			
Intake spark arrester			Tubular, wire screen
COOLING SYSTEM			
Type			Closed loop cooling system
Coolant			Ethylene-glycol and distilled water (50%/50%). Use premix coolant from BRP or a coolant specially formulated for aluminum engines
Cooling system capacity			5.5 L (5.8 qt (U.S. liq.)) total
Thermostat			87°C (189°F)
Monitoring beeper setting			100°C (212°F)

MODEL			GTX 155 / GTX S 155 / GTX 215 / GTX LTD iS 260
EXHAUST SYSTEM			
Type			D-Sea-Bel sound reduction system. Water cooled/water injected (open loop). Direct flow from jet pump
Water injection in muffler			3 x 3.5 mm (.138 in) on exhaust pipe and 1 x 3.5 mm (.138 in) on muffler
FUEL SYSTEM			
Fuel injection type			Multipoint fuel injection with iTC (intelligent Throttle Control). Single throttle body (62 mm) with an actuator
Fuel pressure			386 kPa to 414 kPa (56 PSI to 60 PSI)
Fuel injector		Quantity	3
Fuel type	Inside North America ((RON + MON)/2)	GTX 155	87 or higher
		GTX S 155	
		GTX 215	91 or higher
		GTX LTD iS 260	
	Outside North America (RON)	GTX 155	92 or higher
		GTX S 155	
		GTX 215	95 or higher
		GTX LTD iS 260	
Fuel tank (including reserve)		GTX 155	60 L (16 U.S. gal.)
		GTX S 155	70 L (18 U.S. gal.)
		GTX 215	60 L (16 U.S. gal.)
		GTX LTD iS 260	70 L (18 U.S. gal.)
Fuel tank reserve (from low level signal)		GTX 155	approx. 12 L (3.2 U.S. gal.)
		GTX S 155	approx. 14 L (3.7 U.S. gal.)
		GTX 215	approx. 12 L (3.2 U.S. gal.)
		GTX LTD iS 260	approx. 14 L (3.7 U.S. gal.)
Idle speed			1800 ± 50 RPM (not adjustable)
ELECTRICAL SYSTEM			
Magneto generator output			360 W @ 6000 RPM
Stator			0.1 to 1.0 Ω
Battery			12 V, 30 A•h
Anti-start system			D.E.S.S. (Digitally Encoded Security System) with selectable maximum vehicle speed settings for RK (rental key) and LK (learning key)
Ignition system type			IDI (Inductive Discharge Ignition)
Ignition timing			Variable (electronically controlled)
Spark plug		Make and type	NGK DCPR8E
		Gap	0.7 mm to 0.8 mm (.028 in to .031 in)
Ignition coil		Primary	0.85 to 1.15 Ω
		Secondary	9.5 to 13.5 KΩ
Engine speed limiter setting		GTX 155	7750 RPM
		GTX S 155	
		GTX 215	8300 RPM
		GTX LTD iS 260	

MODEL			GTX 155 / GTX S 155 / GTX 215 / GTX LTD iS 260
ELECTRICAL SYSTEM (cont'd)			
Fuse box	#1: iS control (GTX LTD iS only)		5 A
	#2: Diagnostic connector		15 A
	#3: START/STOP		3 A
	#4: GPS (if so equipped)		3 A
	#5: iBR power		30 A
	#6: Voltage rectifier/regulator		30 A
	#7: iS power (GTX LTD iS only)		30 A
	#8: Battery		30 A
	#11: Depth sounder		3 A
	#12: O.T.A.S., Gauge start up, CAPS		3 A
	#13: Inj/Ign cyl 1		10 A
	#14: Inj/Ign cyl 2		10 A
	#15: Inj/Ign cyl 3		10 A
	#16: Starter solenoid		5 A
	#17: iBR control		5 A
	#18: Fuel pump		10 A
	#19: ECM power		15 A
STEERING AND PROPULSION			
Steering			Adjustable 4 positions
Steering nozzle pivoting angle			26°
O.T.A.S. (Off-Throttle Assisted Steering)			Electronically-controlled
Jet pump		Type	Axial flow single stage
		Grease type	Jet pump bearing grease (P/N 293 550 032)
Impeller	Rotation (seen from rear)		Counterclockwise
	Pitch	GTX 155	10°/21°
		GTX S 155	
		GTX 215	
		GTX LTD iS 260	14°/25°
	Outside diameter		159 mm ± 0.06 mm (6.26 in ± .002 in)
Impeller/wear ring clearance		New	0 mm to 0.23 mm (0 in to .009 in)
		Wear limit	0.35 mm (.0138 in)
Impeller shaft		End play (new)	0
		Side play	0
Drive shaft		Coupling type	Crowned splines, direct drive
		Deflection (max.)	0.5 mm (.02 in)
Minimum required water level for propulsion system			90 cm (3 ft) underneath the lowest rear portion of hull

MODEL		GTX 155 / GTX S 155 / GTX 215 / GTX LTD iS 260
iBR and VTS		
Description		Intelligent Brake and Reverse activated by a LH lever. Electronically-controlled iBR gate to provide brake, reverse, neutral and forward position
Gate angle (from horizontal line of watercraft)	Forward	Approx. from +8° to -4°
	Neutral	Approx. -52°
	Braking	Approx. -70°
	Reverse	Approx. from -52° to -70°
VTS system		Yes
VTS range angle		8° up, -4° down
Actuator		12 V, 80 A max. capacity. Reversible PWM (pulse-width modulation) motor
WEIGHT AND LOADING CAPACITY		
Dry weight	GTX 155	371 kg (816 lb)
	GTX S 155	436 kg (960 lb)
	GTX 215	375 kg (824 lb)
	GTX LTD iS 260	446 kg (980 lb)
Number of passenger (driver incl.)		3
Load limit (passenger and 10 kg (22 lb) luggage)	GTX 155	272 kg (600 lb)
	GTX S 155	227 kg (500 lb)
	GTX 215	272 kg (600 lb)
	GTX LTD iS 260	227 kg (500 lb)
DIMENSIONS		
Overall length		354 cm (139 in)
Overall width		122.4 cm (48 in)
Overall height	GTX 155	116.6 cm (45.91 in)
	GTX S 155	111.4 cm (43.9 in)
	GTX 215	116.6 cm (45.91 in)
	GTX LTD iS 260	111.4 cm (43.9 in)
Overall height with keel horizontal, suspension extended	GTX 155	N.A.
	GTX S 155	127.7 cm (50.3 in)
	GTX 215	N.A.
	GTX LTD iS 260	127.7 cm (50.3 in)
Overall height with keel horizontal, suspension collapsed	GTX 155	N.A.
	GTX S 155	115.8 cm (45.6 in)
	GTX 215	N.A.
	GTX LTD iS 260	115.8 cm (45.6 in)

MODEL	GTX 155 / GTX S 155 / GTX 215 / GTX LTD iS 260
MATERIALS	
Hull	Composite fiberglass
Inlet grate	Aluminum
Steering cover	Thermoplastic
Impeller material	Stainless steel
Impeller housing/stator	Aluminum/aluminum
Venturi	Aluminum
Nozzle	Aluminum
Fuel tank	Polyethylene
Seat	Polyurethane/foam
N.A.: Not Available	

RXT 260

MODEL			RXT 260 / RXT-X 260 / RXT-X aS 260
ENGINE			
Engine type			ROTAX® 1503 4-TEC™, 4-stroke, Single Over Head Camshaft (SOHC)
Induction			Supercharged intercooled
Number of cylinders			3
Number of valves			12 valves with hydraulic lifters (no adjustment)
Bore			100 mm (3.9 in)
Stroke			63.4 mm (2.5 in)
Displacement			1 493.8 cm³ (91 in³)
Compression ratio			8.4:1
Maximum RPM			8000 RPM
Lubrication		Type	Dry sump (2 oil pumps). Replaceable oil filter. Water-cooled oil cooler
		Oil type	XPS synthetic blend oil (summer grade) (P/N 293 600 121). Refer to *LUBRICATION SYSTEM* subsection
		Capacity	3 L (3.2 qt (U.S. liq.)) oil change w/filter 4.5 L (4.8 qt (U.S. liq.)) total
Intake valve opening			0° BTDC
Intake valve closing			50° ABDC
Exhaust valve opening			50° BBDC
Exhaust valve closing			0° ATDC
Valve stem diameter	Intake	New	5.961 mm to 5.975 mm (.2347 in to .2352 in)
		Wear limit	5.930 mm (.233 in)
	Exhaust	New	5.946 mm to 5.960 mm (.2341 in to .2346 in)
		Wear limit	5.930 mm (.233 in)
Valve guide diameter		New	5.994 mm to 6.018 mm (.236 in to .2369 in)
		Wear limit	6.060 mm (.2386 in)
Valve spring free length	Inner	New	41.02 mm (1.615 in)
		Wear limit	38.80 mm (1.528 in)
	Outer	New	45.45 mm (1.789 in)
		Wear limit	43.00 mm (1.693 in)
Valve seat contact width	Intake	New	1.10 mm to 1.30 mm (.043 in to .051 in)
		Wear limit	1.60 mm (.063 in)
	Exhaust	New	1.25 mm to 1.55 mm (.049 in to .061 in)
		Wear limit	1.80 mm (.071 in)
Rocker arm inner diameter		New	20.007 mm to 20.020 mm (.7877 in to .7882 in)
		Wear limit	20.050 mm (.7894 in)
Rocker arm shaft diameter		New	19.980 mm to 19.993 mm (.7866 in to .7871 in)
		Wear limit	19.970 mm (.7862 in)
Cylinder head maximum warpage		Service limit	0.15 mm (.006 in)

MODEL			RXT 260 / RXT-X 260 / RXT-X aS 260
ENGINE (cont'd)			
Piston ring type		1st	Upper compression ring, rectangular
		2nd	Lower compression ring, tapered face
		3rd	Oil scraper ring
Ring end gap	Rectangular	New	0.30 mm to 0.50 mm (.012 in to .02 in)
	Taper-face	New	0.35 mm to 0.55 mm (.014 in to .02 in)
	Oil scraper ring	New	0.35 mm to 0.50 mm (.014 in to .02 in)
	All	Wear limit	1.50 mm (.059 in)
Ring/piston groove clearance	Rectangular	New	0.025 mm to 0.070 mm (.001 in to .003 in)
	Taper-face	New	0.015 mm to 0.06 mm (.0006 in to .0024 in)
	Oil scraper ring	New	0.020 mm to 0.055 mm (.001 in to .002 in)
	All	Wear limit	0.15 mm (.006 in)
Piston/cylinder wall clearance		New	0.04 mm to 0.08 mm (.0016 in to .0031 in)
		Wear limit	0.100 mm (.0039 in)
Cylinder taper		Wear limit	0.100 mm (.0039 in)
Cylinder out of round (maximum)			0.015 mm (.0006 in)
Camshaft bearing journal diameter	Front	New	24.939 mm to 24.960 mm (.9819 in to .9827 in)
		Wear limit	24.910 mm (.9807 in)
	PTO and center	New	39.892 mm to 39.905 mm (1.5706 in to 1.5711 in)
		Wear limit	39.880 mm (1.5701 in)
Camshaft bearing inner diameter	Front	New	25.000 mm to 25.013 mm (.9843 in to .9848 in)
		Wear limit	25.050 mm (.9862 in)
	PTO and center	New	40.000 mm to 40.020 mm (1.5748 in to 1.5756 in)
		Wear limit	40.050 mm (1.5768 in)
Cam lobe height	Intake	New	31.540 mm to 31.740 mm (1.2417 in to 1.2496 in)
		Wear limit	31.50 mm (1.2402 in)
	Exhaust	New	31.430 mm to 31.630 mm (1.2374 in to 1.2453 in)
		Wear limit	31.380 mm (1.2354 in)
Crankshaft deflection		Maximum	0.05 mm (.002 in)
Crankshaft axial clearance		New	0.080 mm to 0.220 mm (.0031 in to .0087 in)
		Wear limit	0.35 mm (.014 in)
Crankshaft bearing journal diameter		New	49.991 mm to 50.000 mm (1.9681 in to 1.9685 in)
		Wear limit	49.950 mm (1.9665 in)
Crankshaft radial clearance		Wear limit	0.07 mm (.0028 in)
Connecting rod big end diameter		Service limit	45.080 mm (1.7748 in)
Connecting rod big end radial play		Service limit	0.090 mm (.0035 in)
Connecting rod big end axial play		New	0.100 mm to 0.352 mm (.004 in to .014 in)
		Wear limit	0.500 mm (.0197 in)
Connecting rod small end diameter		New	23.010 mm to 23.020 mm (.9059 in to .9063 in)
		Wear limit	23.070 mm (.9083 in)
Connecting rod small end radial play		Wear limit	0.080 mm (.0031 in)
Piston pin diameter		New	22.996 mm to 23.000 mm (.9054 in to .9055 in)
		Wear limit	22.990 mm (.9051 in)

MODEL			RXT 260 / RXT-X 260 / RXT-X aS 260
ENGINE (cont'd)			
Balance shaft journal diameter		New	31.984 mm to 32.000 mm (1.2592 in to 1.2598 in)
		Wear limit	31.950 mm (1.2579 in)
Balance shaft radial clearance		Wear limit	0.070 mm (.0028 in)
Balance shaft axial clearance		New	0.020 mm to 0.250 mm (.0008 in to .0098 in)
Supercharger shaft driven plate journal depth		New	14.460 mm to 14.500 mm (.5693 in to .5709 in)
		Wear limit	14.600 mm (.5748 in)
Supercharger drive gear thickness		New	11.000 mm to 11.050 mm (.4331 in to .435 in)
		Wear limit	10.900 mm (.4291 in)
Supercharger lock washer thickness		New	4.050 mm to 4.150 mm (.1594 in to .1634 in)
		Wear limit	3.950 mm (.1555 in)
Supercharger spring washer package height (not compressed)		New	10.900 mm to 10.700 mm (.4291 in to .4213 in)
		Wear limit	10.200 mm (.4016 in)
AIR INTAKE SYSTEM			
Intake spark arrester			Tubular, wire screen
COOLING SYSTEM			
Type			Closed loop cooling system
Coolant			Ethylene-glycol and distilled water (50%/50%). Use premix coolant from BRP or a coolant specially formulated for aluminum engines
Cooling system capacity			5.5 L (5.8 qt (U.S. liq.)) total
Thermostat			87°C (189°F)
Monitoring beeper setting			100°C (212°F)
EXHAUST SYSTEM			
Type			D-Sea-Bel sound reduction system. Water cooled/water injected (open loop). Direct flow from jet pump
Water injection in muffler			3 x 3.5 mm (.138 in) on exhaust pipe and 1 x 3.5 mm (.138 in) on muffler
FUEL SYSTEM			
Fuel injection type			Multipoint fuel injection with iTC (intelligent Throttle Control). Single throttle body (62 mm) with an actuator
Fuel pressure			386 kPa to 414 kPa (56 PSI to 60 PSI)
Fuel injector		Quantity	3
Fuel type	Inside North America ((RON + MON)/2)		91 or higher
	Outside North America (RON)		95 or higher
Fuel tank (including reserve)		RXT 260	60 L (16 U.S. gal.)
		RXT - X 260	
		RXT - X aS 260	70 L (18 U.S. gal.)
Fuel tank reserve (from low level signal)		RXT 260	Approx. 12 L (3.2 U.S. gal.)
		RXT - X 260	
		RXT - X aS 260	Approx. 14 L (3.7 U.S. gal.)
Idle speed			1800 ± 50 RPM (not adjustable)

MODEL			RXT 260 / RXT-X 260 / RXT-X aS 260
ELECTRICAL SYSTEM			
Magneto generator output			360 W @ 6000 RPM
Stator			0.1 to 1.0 Ω
Battery			12 V, 30 A•h
Anti-start system			D.E.S.S. (Digitally Encoded Security System) with selectable maximum vehicle speed settings for RK (rental key) and LK (learning key)
Ignition system type			IDI (Inductive Discharge Ignition)
Ignition timing			Variable (electronically controlled)
Spark plug		Make and type	NGK DCPR8E
		Gap	0.7 mm to 0.8 mm (.028 in to .031 in)
Ignition coil		Primary	0.85 to 1.15 Ω
		Secondary	9.5 to 13.5 KΩ
Engine speed limiter setting			8300 RPM
Fuse box	#2: Diagnostic connector		15 A
	#3: START/STOP		3 A
	#4: GPS (if so equipped		3 A
	#5: iBR power		30 A
	#6: Voltage rectifier/regulator		30 A
	#8: Battery		30 A
	#11: Depth sounder		3 A
	#12: O.T.A.S., Gauge start up, CAPS		3 A
	#13: Inj/Ign cyl 1		10 A
	#14: Inj/Ign cyl 2		10 A
	#15: Inj/Ign cyl 3		10 A
	#16: Starter solenoid		5 A
	#17: iBR control		5 A
	#18: Fuel pump		10 A
	#19: ECM power		15 A
STEERING AND PROPULSION			
Steering		RXT 260	Adjustable 4 positions
		RXT - X 260	Steering: Adjustable 4 positions Handlebar: -0.0 mm to +25 mm
		RXT - X aS 260	
Steering nozzle pivoting angle			26°
O.T.A.S. (Off-Throttle Assisted Steering)			Electronically-controlled. Achieved with the iBR gate and engine speed
Jet pump		Type	Axial flow single stage
		Grease type	Jet pump bearing grease (P/N 293 550 032)
Impeller	Rotation (seen from rear)		Counterclockwise
	Pitch	RXT 260	10°/21°
		RXT - X 260	14°/25°
		RXT - X aS 260	
	Outside diameter		159 mm ± 0.06 mm (6.26 in ± .002 in)
Impeller/wear ring clearance		New	0 mm to 0.23 mm (0 in to .009 in)
		Wear limit	0.35 mm (.0138 in)

MODEL		RXT 260 / RXT-X 260 / RXT-X aS 260
STEERING AND PROPULSION (cont'd)		
Impeller shaft	End play (new)	0
	Side play	0
Drive shaft	Coupling type	Crowned splines, direct drive
	Deflection (max.)	0.5 mm (.02 in)
Minimum required water level for propulsion system		90 cm (3 ft) underneath the lowest rear portion of hull
iBR and VTS		
Description		Intelligent Brake and Reverse activated by a LH lever. Electronically-controlled iBR gate to provide brake, reverse, neutral and forward position
Gate angle (from horizontal line of watercraft)	Forward	Approx. from +8° to -4°
	Neutral	Approx. -52°
	Braking	Approx. -70°
	Reverse	Approx. from -52° to -70°
VTS system		Electronically-controlled through the VTS control button with 2 preset positions
VTS range angle		8° up, -4° down
Actuator		12 V, 80 A max. capacity. Reversible PWM (pulse-width modulation) motor
WEIGHT AND LOADING CAPACITY		
Dry weight	RXT 260	375 kg (824 lb)
	RXT - X 260	379 kg (834 lb)
	RXT - X aS 260	438 kg (965 lb)
Number of passenger (driver incl.)		3
Load limit (passenger and 10 kg (22 lb) luggage)	RXT 260	272 kg (600 lb)
	RXT - X 260	
	RXT - X aS 260	227 kg (500 lb)
DIMENSIONS		
Overall length		354 cm (139 in)
Overall width		122 cm (48 in)
Overall height	RXT 260	116.6 cm (45.91 in)
	RXT - X 260	118 cm (46.5 in)
	RXT - X aS 260	118.1 cm (46.5 in)
Overall height with keel horizontal, suspension extended	RXT 260	N.A.
	RXT - X 260	N.A.
	RXT - X aS 260	127.7 cm (50.3 in)
Overall height with keel horizontal, suspension collapsed	RXT 260	N.A.
	RXT - X 260	N.A.
	RXT - X aS 260	115.8 cm (45.6 in)

MODEL	RXT 260 / RXT-X 260 / RXT-X aS 260
MATERIALS	
Hull	Composite fiberglass
Inlet grate	Aluminum
Steering cover	Thermoplastic
Impeller material	Stainless steel
Impeller housing/stator	Aluminum/aluminum
Venturi	Aluminum
Nozzle	Aluminum
Fuel tank	Polyethylene
Seat	Polyurethane/foam
N.A.: Not Available	

WAKE PRO 215

MODEL			WAKE PRO 215
ENGINE			
Engine type			ROTAX® 1503 4-TEC™, 4-stroke, Single Over Head Camshaft (SOHC)
Induction			Supercharged intercooled
Number of cylinders			3
Number of valves			12 valves with hydraulic lifters (no adjustment)
Bore			100 mm (3.9 in)
Stroke			63.4 mm (2.5 in)
Displacement			1 493.8 cm^3 (91 in^3)
Compression ratio			8.4:1
Maximum RPM			8000 RPM
Lubrication		Type	Dry sump (2 oil pumps). Replaceable oil filter. Water-cooled oil cooler
		Oil type	XPS synthetic blend oil (summer grade) (P/N 293 600 121). Refer to *LUBRICATION SYSTEM* subsection
		Capacity	3 L (3.2 qt (U.S. liq.)) oil change w/filter 4.5 L (4.8 qt (U.S. liq.)) total
Intake valve opening			0° BTDC
Intake valve closing			50° ABDC
Exhaust valve opening			50° BBDC
Exhaust valve closing			0° ATDC
Valve stem diameter	Intake	New	5.961 mm to 5.975 mm (.2347 in to .2352 in)
		Wear limit	5.930 mm (.233 in)
	Exhaust	New	5.946 mm to 5.960 mm (.2341 in to .2346 in)
		Wear limit	5.930 mm (.233 in)
Valve guide diameter		New	5.994 mm to 6.018 mm (.236 in to .2369 in)
		Wear limit	6.060 mm (.2386 in)
Valve spring free length	Inner	New	41.02 mm (1.615 in)
		Wear limit	38.80 mm (1.528 in)
	Outer	New	45.45 mm (1.789 in)
		Wear limit	43.00 mm (1.693 in)
Valve seat contact width	Intake	New	1.10 mm to 1.30 mm (.043 in to .051 in)
		Wear limit	1.60 mm (.063 in)
	Exhaust	New	1.25 mm to 1.55 mm (.049 in to .061 in)
		Wear limit	1.80 mm (.071 in)
Rocker arm inner diameter		New	20.007 mm to 20.020 mm (.7877 in to .7882 in)
		Wear limit	20.050 mm (.7894 in)
Rocker arm shaft diameter		New	19.980 mm to 19.993 mm (.7866 in to .7871 in)
		Wear limit	19.970 mm (.7862 in)
Cylinder head maximum warpage		Service limit	0.15 mm (.006 in)

MODEL			WAKE PRO 215
ENGINE (cont'd)			
Piston ring type		1st	Upper compression ring, rectangular
		2nd	Lower compression ring, tapered face
		3rd	Oil scraper ring
Ring end gap	Rectangular	New	0.30 mm to 0.50 mm (.012 in to .02 in)
	Taper-face	New	0.35 mm to 0.55 mm (.014 in to .022 in)
	Oil scraper ring	New	0.35 mm to 0.50 mm (.014 in to .02 in)
	All	Wear limit	1.50 mm (.059 in)
Ring/piston groove clearance	Rectangular	New	0.025 mm to 0.070 mm (.001 in to .003 in)
	Taper-face	New	0.015 mm to 0.06 mm (.0006 in to .0024 in)
	Oil scraper ring	New	0.020 mm to 0.055 mm (.001 in to .002 in)
	All	Wear limit	0.15 mm (.006 in)
Piston/cylinder wall clearance		New	0.04 mm to 0.08 mm (.0016 in to .0031 in)
		Wear limit	0.100 mm (.0039 in)
Cylinder taper		Wear limit	0.100 mm (.0039 in)
Cylinder out of round (maximum)			0.015 mm (.0006 in)
Camshaft bearing journal diameter	Front	New	24.939 mm to 24.960 mm (.9819 in to .9827 in)
		Wear limit	24.910 mm (.9807 in)
	PTO and center	New	39.892 mm to 39.905 mm (1.5706 in to 1.5711 in)
		Wear limit	39.880 mm (1.5701 in)
Camshaft bearing inner diameter	Front	New	25.000 mm to 25.013 mm (.9843 in to .9848 in)
		Wear limit	25.050 mm (.9862 in)
	PTO and center	New	40.000 mm to 40.020 mm (1.5748 in to 1.5756 in)
		Wear limit	40.050 mm (1.5768 in)
Cam lobe height	Intake	New	31.540 mm to 31.740 mm (1.2417 in to 1.2496 in)
		Wear limit	31.50 mm (1.2402 in)
	Exhaust	New	31.430 mm to 31.630 mm (1.2374 in to 1.2453 in)
		Wear limit	31.380 mm (1.2354 in)
Crankshaft deflection		Maximum	0.05 mm (.002 in)
Crankshaft axial clearance		New	0.080 mm to 0.220 mm (.0031 in to .0087 in)
		Wear limit	0.35 mm (.014 in)
Crankshaft bearing journal diameter		New	49.991 mm to 50.000 mm (1.9681 in to 1.9685 in)
		Wear limit	49.950 mm (1.9665 in)
Crankshaft radial clearance		Wear limit	0.07 mm (.0028 in)
Connecting rod big end diameter		Service limit	45.080 mm (1.7748 in)
Connecting rod big end radial play		Service limit	0.090 mm (.0035 in)
Connecting rod big end axial play		New	0.100 mm - 0.352 mm (.004 in - .014 in)
		Wear limit	0.500 mm (.0197 in)
Connecting rod small end diameter		New	23.010 mm to 23.020 mm (.9059 in to .9063 in)
		Wear limit	23.070 mm (.9083 in)
Connecting rod small end radial play		Wear limit	0.080 mm (.0031 in)
Piston pin diameter		New	22.996 mm to 23.000 mm (.9054 in to .9055 in)
		Wear limit	22.990 mm (.9051 in)

MODEL			WAKE PRO 215
ENGINE (cont'd)			
Balance shaft journal diameter		New	31.984 mm to 32.000 mm (1.2592 in to 1.2598 in)
		Wear limit	31.950 mm (1.2579 in)
Balance shaft radial clearance		Wear limit	0.070 mm (.0028 in)
Balance shaft axial clearance		New	0.020 mm to 0.250 mm (.0008 in to .0098 in)
Supercharger shaft driven plate journal depth		New	14.460 mm to 14.500 mm (.5693 in to .5709 in)
		Wear limit	14.600 mm (.5748 in)
Supercharger drive gear thickness		New	11.000 mm to 11.050 mm (.4331 in to .435 in)
		Wear limit	10.900 mm (.4291 in)
Supercharger lock washer thickness		New	4.050 mm to 4.150 mm (.1594 in to .1634 in)
		Wear limit	3.950 mm (.1555 in)
Supercharger spring washer package height (not compressed)		New	10.900 mm to 10.700 mm (.4291 in to .4213 in)
		Wear limit	10.200 mm (.4016 in)
AIR INTAKE SYSTEM			
Intake spark arrester			Tubular, wire screen
COOLING SYSTEM			
Type			Closed loop cooling system
Coolant			Ethylene-glycol and distilled water (50%/50%). Use premix coolant from BRP or a coolant specially formulated for aluminum engines
Cooling system capacity			5.5 L (5.8 qt (U.S. liq.)) total
Thermostat			87°C (189°F)
Monitoring beeper setting			100°C (212°F)
EXHAUST SYSTEM			
Type			D-Sea-Bel sound reduction system. Water cooled/water injected (open loop). Direct flow from jet pump
Water injection in muffler			3 x 3.5 mm (.138 in) on exhaust pipe and 1 x 3.5 mm (.138 in) on muffler
FUEL SYSTEM			
Fuel injection type			Multipoint fuel injection with iTC (intelligent Throttle Control). Single throttle body (62 mm) with an actuator
Fuel pressure			386 kPa to 414 kPa (56 PSI to 60 PSI)
Fuel injector		Quantity	3
Fuel type	Inside North America ((RON + MON)/2)		91 or higher
	Outside North America (RON)		95 or higher
Fuel tank (including reserve)			70 L (18 U.S. gal.)
Fuel tank reserve (from low level signal)			approx. 14 L (3.7 U.S. gal.)
Idle speed			1800 ± 50 RPM (not adjustable)
ELECTRICAL SYSTEM			
Magneto generator output			360 W @ 6000 RPM
Stator			0.1 to 1.0 Ω
Battery			12 V, 30 A•h
Anti-start system			D.E.S.S. (Digitally Encoded Security System) with selectable maximum vehicle speed settings for RK (rental key) and LK (learning key)
Ignition system type			IDI (Inductive Discharge Ignition)
Ignition timing			Variable (electronically controlled)

MODEL			WAKE PRO 215
ELECTRICAL SYSTEM (cont'd)			
Spark plug		Make and type	NGK DCPR8E
		Gap	0.7 mm to 0.8 mm (.028 in to .031 in)
Ignition coil		Primary	0.85 to 1.15 Ω
		Secondary	9.5 to 13.5 KΩ
Engine speed limiter setting			8300 RPM
Fuse box	#2: Diagnostic connector		15 A
	#3: START/STOP		3 A
	#4:GPS (if so equipped)		3 A
	#5: iBR power		30 A
	#6: Voltage rectifier/regulator		30 A
	#8: Battery		30 A
	#11: Depth sounder		3 A
	#12: O.T.A.S., Gauge start up, CAPS		3 A
	#13: Inj/Ign cyl 1		10 A
	#14: Inj/Ign cyl 2		10 A
	#15: Inj/Ign cyl 3		10 A
	#16: Starter solenoid		5 A
	#17: iBR control		5 A
	#18: Fuel pump		10 A
	#19: ECM power		15 A
STEERING AND PROPULSION			
Steering			Adjustable 4 positions
Steering nozzle pivoting angle			26°
O.T.A.S. (Off-Throttle Assisted Steering)			Electronically-controlled. Achieved with the iBR gate and engine speed
Jet pump		Type	Axial flow single stage
		Grease type	Jet pump bearing grease (P/N 293 550 032)
Impeller		Rotation (seen from rear)	Counterclockwise
		Pitch	10°/21°
		Outside diameter	159 mm ± 0.06 mm (6.26 in ± .002 in)
STEERING AND PROPULSION (cont'd)			
Impeller/wear ring clearance		New	0 mm to 0.23 mm (0 in to .009 in)
		Wear limit	0.35 mm (.0138 in)
Impeller shaft		End play (new)	0
		Side play	0
Drive shaft		Coupling type	Crowned splines, direct drive
		Deflection (max.)	0.5 mm (.02 in)
Minimum required water level for propulsion system			90 cm (3 ft) underneath the lowest rear portion of hull

MODEL		WAKE PRO 215
iBR and VTS		
Description		Intelligent Brake and Reverse activated by a LH lever. Electronically-controlled iBR gate to provide brake, reverse, neutral and forward position
Gate angle (from horizontal line of watercraft)	Forward	Approx. from +8° to -4°
	Neutral	Approx. -52°
	Braking	Approx. -70°
	Reverse	Approx. from -52° to -70°
VTS system		Electronically-controlled through the VTS control button
VTS range angle		8° up, -4° down
Actuator		12 V, 80 A max. capacity. Reversible PWM (pulse-width modulation) motor
WEIGHT AND LOADING CAPACITY		
Dry weight		379 kg (834 lb)
Number of passenger (driver incl.)		3
Load limit (passenger and 10 kg (22 lb) luggage)		272 kg (600 lb)
DIMENSIONS		
Overall length		354 cm (139 in)
Overall width		122 cm (48 in)
Overall height		116.6 cm (45.91 in)
MATERIALS		
Hull		Composite fiberglass
Inlet grate		Aluminum
Steering cover		Thermoplastic
Impeller material		Stainless steel
Impeller housing/stator		Aluminum/aluminum
Venturi		Aluminum
Nozzle		Aluminum
Fuel tank		Polyethylene
Seat		Polyurethane/foam

RXP - X 260

MODEL			RXP - X 260
ENGINE			
Engine type			ROTAX® 1503 4-TEC™, 4-stroke, Single Over Head Camshaft (SOHC)
Induction			Supercharged intercooled
Number of cylinders			3
Number of valves			12 valves with hydraulic lifters (no adjustment)
Bore			100 mm (3.9 in)
Stroke			63.4 mm (2.5 in)
Displacement			1 493.8 cm^3 (91 in^3)
Compression ratio			8.4:1
Maximum RPM			8000 RPM
Lubrication		Type	Dry sump (2 oil pumps). Replaceable oil filter. Water-cooled oil cooler
		Oil type	XPS synthetic blend oil (summer grade) (P/N 293 600 121). Refer to *LUBRICATION SYSTEM* subsection
		Capacity	3 L (3.2 qt (U.S. liq.)) oil change w/filter 4.5 L (4.8 qt (U.S. liq.)) total
Intake valve opening			0° BTDC
Intake valve closing			50° ABDC
Exhaust valve opening			50° BBDC
Exhaust valve closing			0° ATDC
Valve stem diameter	Intake	New	5.961 mm to 5.975 mm (.2347 in to .2352 in)
		Wear limit	5.930 mm (.233 in)
	Exhaust	New	5.946 mm to 5.960 mm (.2341 in to .2346 in)
		Wear limit	5.930 mm (.233 in)
Valve guide diameter		New	5.994 mm to 6.018 mm (.236 in to .2369 in)
		Wear limit	6.060 mm (.2386 in)
Valve spring free length	Inner	New	41.02 mm (1.615 in)
		Wear limit	38.80 mm (1.528 in)
	Outer	New	45.45 mm (1.789 in)
		Wear limit	43.00 mm (1.693 in)
Valve seat contact width	Intake	New	1.10 mm to 1.30 mm (.043 in to .051 in)
		Wear limit	1.60 mm (.063 in)
	Exhaust	New	1.25 mm to 1.55 mm (.049 in to .061 in)
		Wear limit	1.80 mm (.071 in)
Rocker arm inner diameter		New	20.007 mm to 20.020 mm (.7877 in to .7882 in)
		Wear limit	20.050 mm (.7894 in)
Rocker arm shaft diameter		New	19.980 mm to 19.993 mm (.7866 in to .7871 in)
		Wear limit	19.970 mm (.7862 in)
Cylinder head maximum warpage		Service limit	0.15 mm (.006 in)

MODEL			RXP - X 260
ENGINE (cont'd)			
Piston ring type		1st	Upper compression ring, rectangular
		2nd	Lower compression ring, tapered face
		3rd	Oil scraper ring
Ring end gap	Rectangular	New	0.30 mm to 0.50 mm (.012 in to .02 in)
	Taper-face	New	0.35 mm to 0.55 mm (.014 in to .02 in)
	Oil scraper ring	New	0.35 mm to 0.50 mm (.014 in to .02 in)
	All	Wear limit	1.50 mm (.059 in)
Ring/piston groove clearance	Rectangular	New	0.025 mm to 0.070 mm (.001 in to .003 in)
	Taper-face	New	0.015 mm to 0.06 mm (.0006 in to .0024 in)
	Oil scraper ring	New	0.020 mm to 0.055 mm (.001 in to .002 in)
	All	Wear limit	0.15 mm (.006 in)
Piston/cylinder wall clearance		New	0.04 mm to 0.08 mm (.0016 in to .0031 in)
		Wear limit	0.100 mm (.0039 in)
Cylinder taper		Wear limit	0.100 mm (.0039 in)
Cylinder out of round (maximum)			0.015 mm (.0006 in)
Camshaft bearing journal diameter	Front	New	24.939 mm to 24.960 mm (.9819 in to .9827 in)
		Wear limit	24.910 mm (.9807 in)
	PTO and center	New	39.892 mm to 39.905 mm (1.5706 in to 1.5711 in)
		Wear limit	39.880 mm (1.5701 in)
Camshaft bearing inner diameter	Front	New	25.000 mm to 25.013 mm (.9843 in to .9848 in)
		Wear limit	25.050 mm (.9862 in)
	PTO and center	New	40.000 mm to 40.020 mm (1.5748 in to 1.5756 in)
		Wear limit	40.050 mm (1.5768 in)
Cam lobe height	Intake	New	31.540 mm to 31.740 mm (1.2417 in to 1.2496 in)
		Wear limit	31.50 mm (1.2402 in)
	Exhaust	New	31.430 mm to 31.630 mm (1.2374 in to 1.2453 in)
		Wear limit	31.380 mm (1.2354 in)
Crankshaft deflection		Maximum	0.05 mm (.002 in)
Crankshaft axial clearance		New	0.080 mm to 0.220 mm (.0031 in to .0087 in)
		Wear limit	0.35 mm (.014 in)
Crankshaft bearing journal diameter		New	49.991 mm to 50.000 mm (1.9681 in to 1.9685 in)
		Wear limit	49.950 mm (1.9665 in)
Crankshaft radial clearance		Wear limit	0.07 mm (.0028 in)
Connecting rod big end diameter		Service limit	45.080 mm (1.7748 in)
Connecting rod big end radial play		Service limit	0.090 mm (.0035 in)
Connecting rod big end axial play		New	0.100 mm to 0.352 mm (.004 in to .014 in)
		Wear limit	0.500 mm (.0197 in)
Connecting rod small end diameter		New	23.010 mm to 23.020 mm (.9059 in to .9063 in)
		Wear limit	23.070 mm (.9083 in)
Connecting rod small end radial play		Wear limit	0.080 mm (.0031 in)

MODEL			RXP - X 260
ENGINE (cont'd)			
Piston pin diameter		New	22.996 mm to 23.000 mm (.9054 in to .9055 in)
		Wear limit	22.990 mm (.9051 in)
Balance shaft journal diameter		New	31.984 mm to 32.000 mm (1.2592 in to 1.2598 in)
		Wear limit	31.950 mm (1.2579 in)
Balance shaft radial clearance		Wear limit	0.070 mm (.0028 in)
Balance shaft axial clearance		New	0.020 mm to 0.250 mm (.0008 in to .0098 in)
Supercharger shaft driven plate journal depth		New	14.460 mm to 14.500 mm (.5693 in to .5709 in)
		Wear limit	14.600 mm (.5748 in)
Supercharger drive gear thickness		New	11.000 mm to 11.050 mm (.4331 in to .435 in)
		Wear limit	10.900 mm (.4291 in)
Supercharger lock washer thickness		New	4.050 mm to 4.150 mm (.1594 in to .1634 in)
		Wear limit	3.950 mm (.1555 in)
Supercharger spring washer package height (not compressed)		New	10.900 mm to 10.700 mm (.4291 in to .4213 in)
		Wear limit	10.200 mm (.4016 in)
AIR INTAKE SYSTEM			
Intake spark arrester			Tubular, wire screen
COOLING SYSTEM			
Type			Closed loop cooling system
Coolant			Ethylene-glycol and distilled water (50%/50%). Use premix coolant from BRP or a coolant specially formulated for aluminum engines
Cooling system capacity			5.5 L (5.8 qt (U.S. liq.)) total
Thermostat			87°C (189°F)
Monitoring beeper setting			100°C (212°F)
EXHAUST SYSTEM			
Type			D-Sea-Bel sound reduction system. Water cooled/water injected (open loop). Direct flow from jet pump
Water injection in muffler			3 x 3.5 mm (.138 in) on exhaust pipe and 1 x 3.5 mm (.138 in) on muffler
FUEL SYSTEM			
Fuel injection type			Multipoint fuel injection with iTC (intelligent Throttle Control). Single throttle body (62 mm) with an actuator
Fuel pressure			386 kPa to 414 kPa (56 PSI to 60 PSI)
Fuel injector		Quantity	3
Fuel type	Inside North America ((RON + MON)/2)		91 or higher
	Outside North America (RON)		95 or higher
Fuel tank (including reserve)			60 L (16 U.S. gal.)
Fuel tank reserve (from low level signal)			approx. 12 L (3.2 U.S. gal.)
Idle speed			1800 ± 50 RPM (not adjustable)
ELECTRICAL SYSTEM			
Magneto generator output			360 W @ 6000 RPM
Stator			0.1 to 1.0 Ω
Battery			12 V, 30 A•h

MODEL			RXP - X 260
ELECTRICAL SYSTEM (cont'd)			
Anti-start system			D.E.S.S. (Digitally Encoded Security System) with selectable maximum vehicle speed settings for RK (rental key) and LK (learning key)
Ignition system type			IDI (Inductive Discharge Ignition)
Ignition timing			Variable (electronically controlled)
Spark plug		Make and type	NGK DCPR8E
		Gap	0.7 mm to 0.8 mm (.028 in to .031 in)
Ignition coil		Primary	0.85 to 1.15 Ω
		Secondary	9.5 to 13.5 KΩ
Engine speed limiter setting			8300 RPM
Fuse box	#2: Diagnostic connector		15 A
	#3: START/STOP		3 A
	#4: GPS (if so equipped)		3 A
	#5: iBR power		30 A
	#6: Voltage rectifier/regulator		30 A
	#8: Battery		30 A
	#11: Depth sounder		3 A
	#12: O.T.A.S., Gauge start up, CAPS		3 A
	#13: Inj/Ign cyl 1		10 A
	#14: Inj/Ign cyl 2		10 A
	#15: Inj/Ign cyl 3		10 A
	#16: Starter solenoid		5 A
	#17: iBR control		5 A
	#18: Fuel pump		10 A
	#19: ECM power		15 A
STEERING AND PROPULSION			
Steering			Adjustable 4 positions
Steering nozzle pivoting angle			26°
O.T.A.S. (Off-Throttle Assisted Steering)			Electronically-controlled. Achieved with the iBR gate and engine speed
Jet pump		Type	Axial flow single stage
		Grease type	Jet pump bearing grease (P/N 293 550 032)
Impeller	Rotation (seen from rear)		Counterclockwise
	Pitch	RXP X 260	14°/25°
	Outside diameter		159 mm ± 0.06 mm (6.26 in ± .002 in)
Impeller/wear ring clearance		New	0 mm to 0.23 mm (0 in to .009 in)
		Wear limit	0.35 mm (.0138 in)
Impeller shaft		End play (new)	0
		Side play	0
Drive shaft		Coupling type	Crowned splines, direct drive
		Deflection (max.)	0.5 mm (.02 in)
Minimum required water level for propulsion system			90 cm (3 ft) underneath the lowest rear portion of hull

MODEL		RXP - X 260
iBR and VTS		
Description		Intelligent Brake and Reverse activated by a LH lever. Electronically-controlled iBR gate to provide brake, reverse, neutral and forward position
Gate angle (from horizontal line of watercraft)	Forward	Approx. from +8° to -4°
	Neutral	Approx. -52°
	Braking	Approx. -70°
	Reverse	Approx. from -52° to -70°
VTS system		Electronically-controlled through the VTS control button with 2 preset positions
VTS range angle		8° up, -4° down
Actuator		12 V, 80 A max. capacity. Reversible PWM (pulse-width modulation) motor
WEIGHT AND LOADING CAPACITY		
Dry weight		368.3 kg (812 lb)
Number of passenger (driver incl.)		2
Load limit (passenger and 10 kg (22 lb) luggage)		182 kg (400 lb)
DIMENSIONS		
Overall length		331.6 cm (131 in)
Overall width		122.7 cm (48.3 in)
Overall height		114.7 cm (45.2 in)
MATERIALS		
Hull		Composite fiberglass
Inlet grate		Aluminum
Steering cover		Thermoplastic
Impeller material		Stainless steel
Impeller housing/stator		Aluminum/aluminum
Venturi		Aluminum
Nozzle		Aluminum
Fuel tank		Polyethylene
Seat		Polyurethane/foam
N.A.: Not Available		

WIRING DIAGRAM INFORMATION

GENERAL

WIRING DIAGRAM LOCATION

The wiring diagrams are in the back cover pocket.

WIRING DIAGRAM CODES

Wire Color Codes

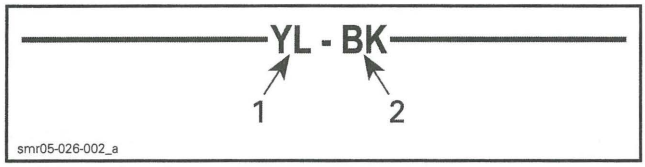

1. *Wire main color*
2. *Tracer (thin colored line)*

General Wire Color Use

COLOR	USE
RED	Battery power (12 Vdc directly connected to battery)
RED + tracer	Fused 12 Vdc power or switched power from relay
VIOLET or VIOLET + tracer	Fused 12 Vdc accessory power from fuse box
YELLOW	Alternating current (AC) from magneto
BLACK	Ground
WHITE/BEIGE WHITE/BLACK	CAN HI wires, CAN LO wires

Color Codes

COLOR CODES			
CODE	COLOR	CODE	COLOR
BE	BEIGE (TAN)	OR	ORANGE
BR	BROWN	PK	PINK
BU	BLUE	RD	RED
BK	BLACK	VI	VIOLET
GN	GREEN	WH	WHITE
GY	GRAY	YL	YELLOW

Terminal Identification on Connector

On the wiring diagram, a letter or a digit is used to identify the terminal position in a connector.

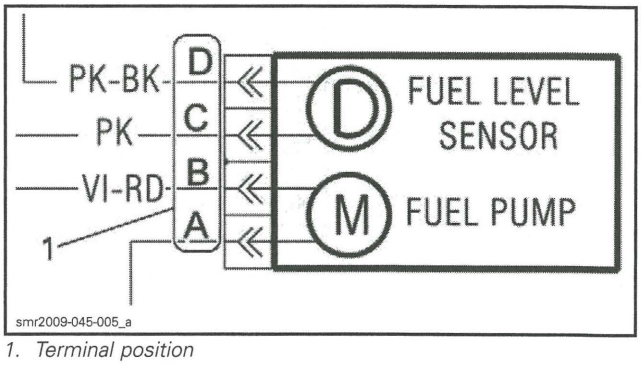

1. *Terminal position*

On a connector, a letter or a digit is usually molded on the connector to identify the terminal position.

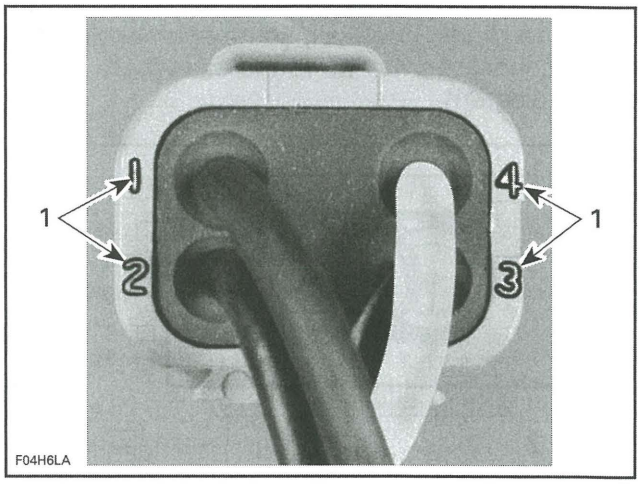

TYPICAL
1. *Wire identification numbers*

Terminal Identification on a Wiring Diagram

In-line connectors of wiring harnesses are identified on the wiring diagram with their approximate location and the following information.

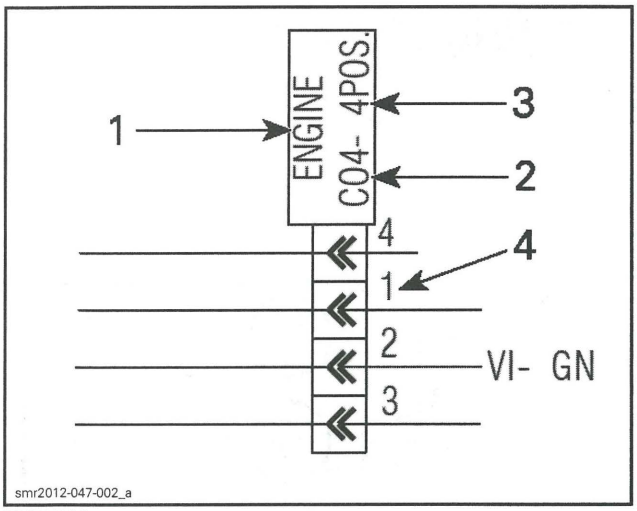

TYPICAL
1. *Connector location*
2. *Connector identification (reference number)*
3. *Number of pins (terminals)*
4. *Wire pin location in connector*

Connectors Linked by a Dashed Line

Connectors may be divided into segments linked by dashed lines, however, some segments of the same connector may be found elsewhere on the wiring diagram.

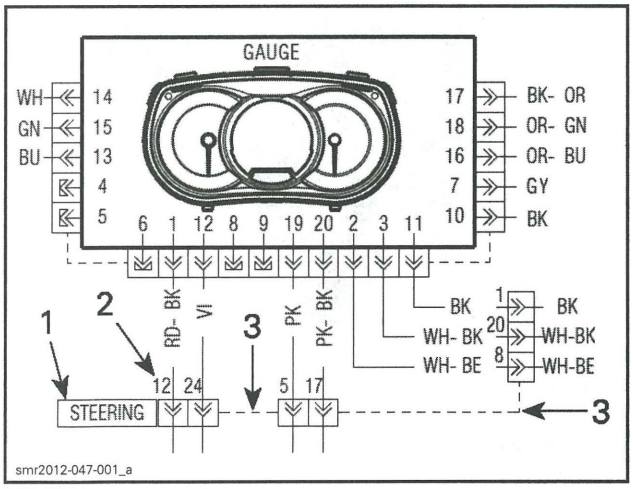

TYPICAL
1. *Connector identification and location*
2. *Connector pin number*
3. *Dashed line links connector segments as one*

CAN Wire Circuit References

On the wiring diagram, CAN linked components use the following coding.

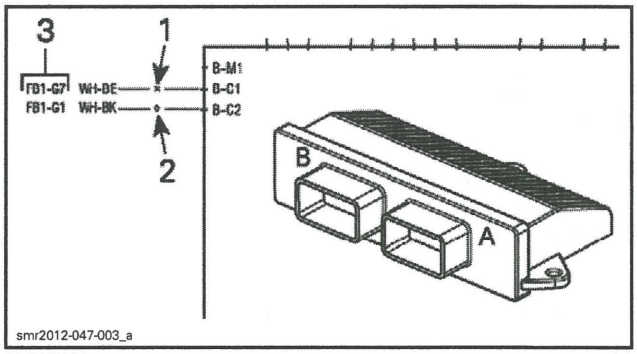

TYPICAL
1. *CAN HI wire (x)*
2. *CAN LOW wire (o)*
3. *Wire destination*

FB1: Fuse box no. 1
G7: Terminal G7 in fuse box no. 1

Corresponding CAN links are identified at fuse box using the following coding.

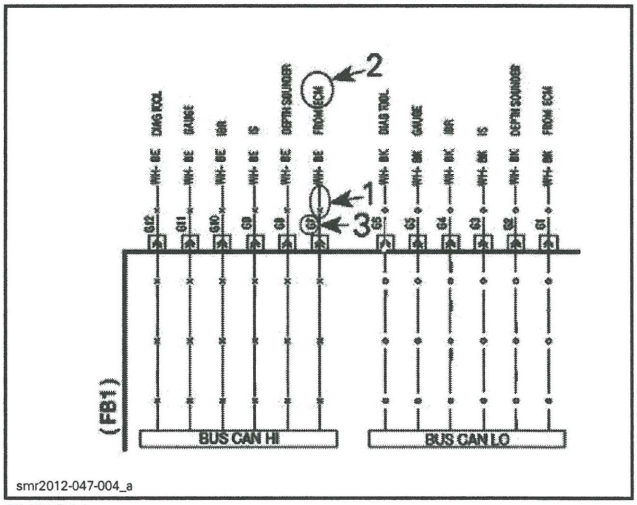

TYPICAL
1. *CAN wire*
2. *Wire origin*
3. *Destination terminal (as referenced at ECM)*

Component Application

If a component in the wiring diagram is not applicable to every vehicle model, or can be installed as an option or accessory on certain models, the component shall be enclosed in a dash line.

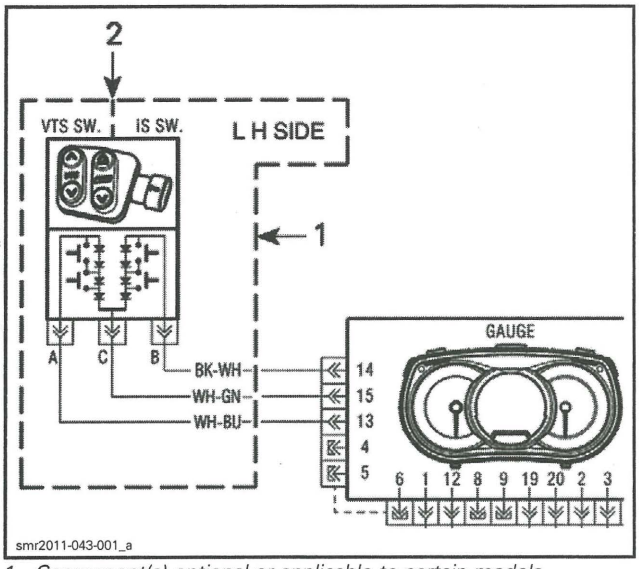

1. Component(s) optional or applicable to certain models
2. Indicates each switch is a separate component

2013 SEA-DOO
4-TEC-iTC SERIES

COLOR TABLE	
WH = WHITE	BK = BLACK
RD = RED	YL = YELLOW
VI = VIOLET	BE = TAN
GN = GREEN	BR = BROWN
GY = GREY	BU = BLUE
PK = PINK	OR = ORANGE

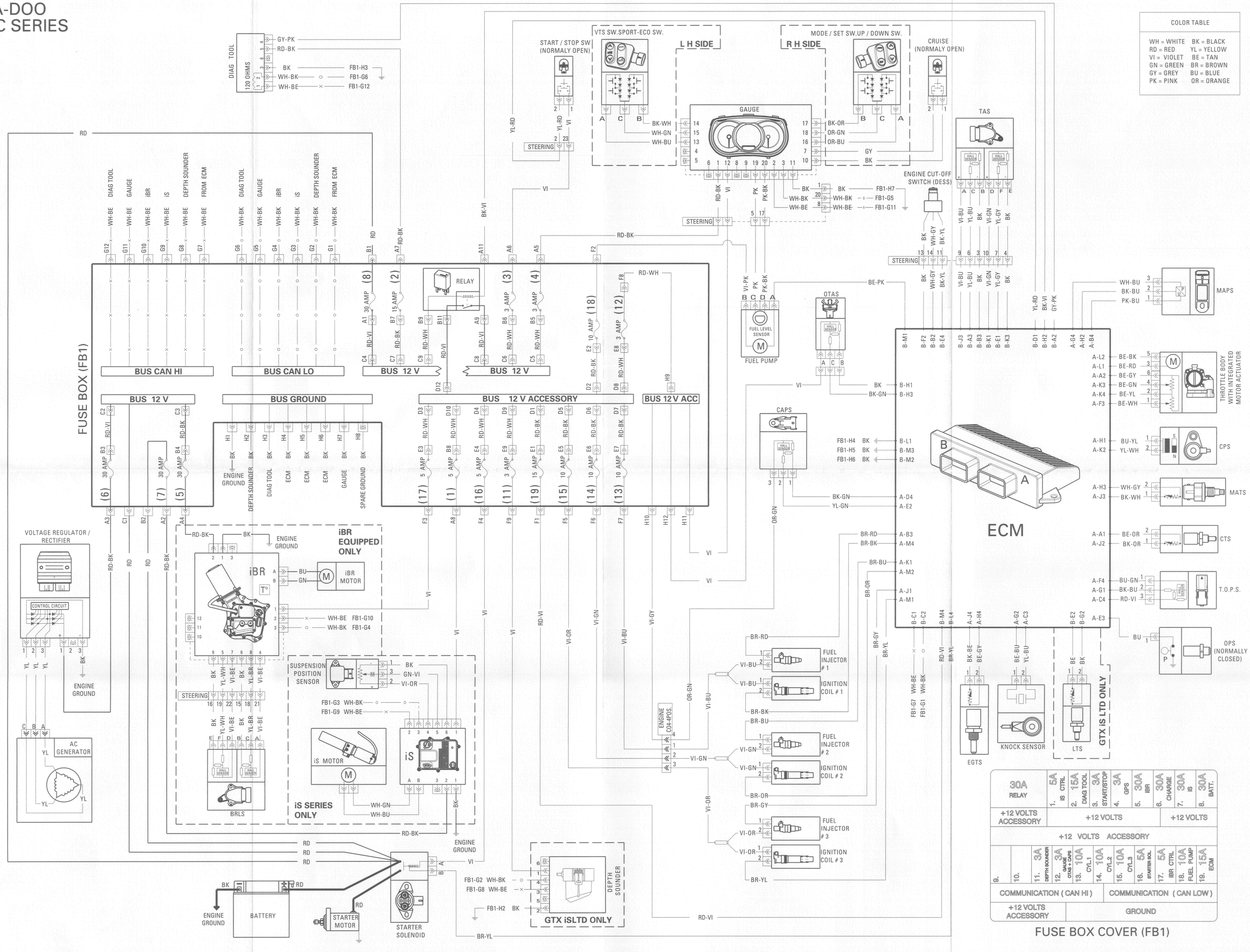

30A RELAY								
1. 5A IS CTRL	2. 15A DIAG TOOL	3. 3A START/STOP	4. 3A GPS	5. 30A IBR	6. 30A CHARGE	7. 30A IS	8. 30A BATT.	
+12 VOLTS ACCESSORY	+12 VOLTS						+12 VOLTS	
+12 VOLTS ACCESSORY								
9.	10.	11. 3A DEPTH SOUNDER	12. 3A GAUGE, OTAS + CAPS	13. 10A CYL 1	14. 10A CYL 2	15. 10A CYL 3	16. 5A STARTER SOL.	17. 5A IBR CTRL	18. 10A FUEL PUMP	19. 15A ECM
COMMUNICATION (CAN HI)							COMMUNICATION (CAN LOW)			
+12 VOLTS ACCESSORY							GROUND			

FUSE BOX COVER (FB1)

smr2013-018-001

2013 SEA-DOO
4-TEC-iTC SERIES

STARTING SYSTEM

OPERATON:

1- FUSES 3, 8, 16 AND 19 ARE GOOD.

2- PRESS " START/STOP " BUTTON TO WAKE UP ECM.

3- INSTALL A PROGRAMMED KEY ON DESS POST, BUZZER SHOULD SOUND TWICE.

4- PRESS " START/STOP " BUTTON AGAIN.

5- STARTER SOLENOID IS ACTIVATED WHEN GROUND IS SWITCHED BY ECM.

6- STARTER MOTOR IS ENGAGED WHEN STARTER SOLENOID IS SWITCHED.

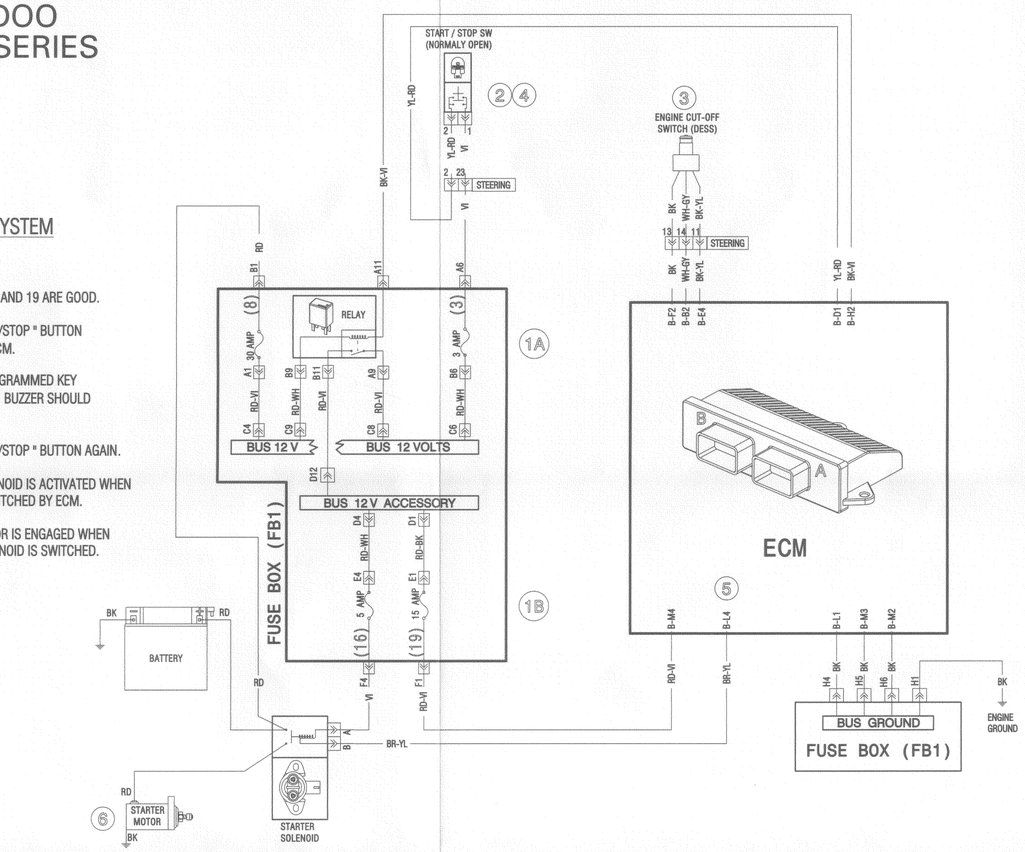

IGNITION SYSTEM

OPERATION:

1- T.O.P.S. IN OPERATION (VEHICLE UPRIGHT)

2- FUSES 12, 13, 14, AND 15 ARE GOOD

3- SIGNALS FROM SENSORS MONITORED BY ECM

4- SPARK OCCURS WHEN PRIMARY WINDING IS SWITCHED TO GROUND BY ECM.

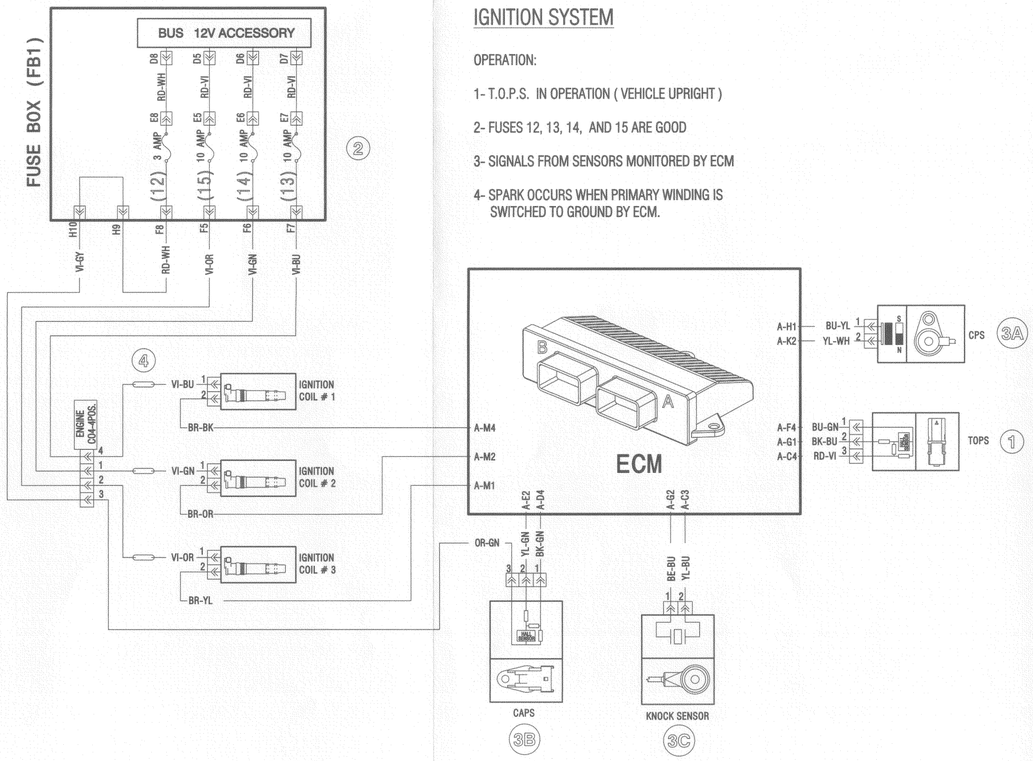

CHARGING SYSTEM

OPERATION:

1- FUSE 6 IS GOOD.

2- ACG SENDS CURRENT TO VOLTAGE REGULATOR / RECTIFIER

3- VOLTAGE REGULATION AND CURRENT RECTIFICATION FROM ALTERNATIVE CURRENT (AC) TO DIRECT CURRENT (DC).

4- DIRECT CURRENT CHARGES BATTERY.

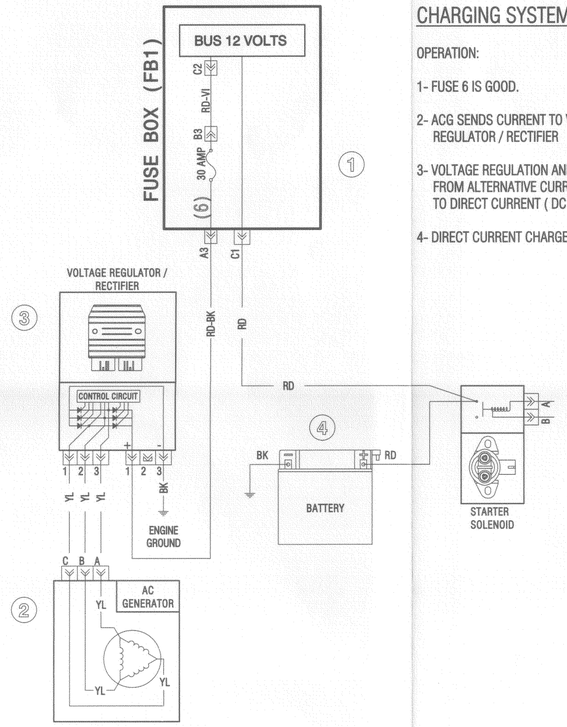

COLOR TABLE	
WH = WHITE	BK = BLACK
RD = RED	YL = YELLOW
VI = VIOLET	BE = TAN
GN = GREEN	BR = BROWN
GY = GREY	BU = BLUE
PK = PINK	OR = ORANGE

30A RELAY	1. 5A IS CTRL	2. 15A DIAG TOOL	3. 3A START/STOP	4. 3A GPS	5. 30A IBR	6. 30A CHARGE	7. 30A IS	8. 30A BATT.		
+12 VOLTS ACCESSORY	+12 VOLTS								+12 VOLTS	
+12 VOLTS ACCESSORY										
9.	10.	11. 3A DEPTH SOUNDER	12. 3A GAUGE OTAS + CAPS	13. 10A CYL 1	14. 10A CYL2	15. 10A CYL3	16. 5A STARTER SOL	17. 5A IBR CTRL	18. 10A FUEL PUMP	19. 15A ECM
COMMUNICATION (CAN HI)									COMMUNICATION (CAN LOW)	
+12 VOLTS ACCESSORY									GROUND	

FUSE BOX (FB1)

NOTES

NOTES

NOTES

NOTES

NOTES

SEA LEVEL SPECIFICATIONS

GTI™ SERIES				
MODEL	MODEL NUMBER	PITCH ANGLE (°)	IMPELLER / VENTURI DIAMETER (MM)	PART NUMBER
GTI 130	23DB/23DD 23DC/23DA	11-18	155/84	(P/N 267 000 532)
GTI SE 130	24DB/24DA/24DC			
GTI Limited 155	39DB/39DA			
GTI SE 155	30DA/30DB			

GTS™ SERIES				
MODEL	MODEL NUMBER	PITCH ANGLE (°)	IMPELLER / VENTURI DIAMETER (MM)	PART NUMBER
GTS 130	43DB/43DA	11-18	155/84	(P/N 267 000 532)
GTS RENTAL 130	25DB			

GTR™ SERIES				
MODEL	MODEL NUMBER	PITCH ANGLE (°)	IMPELLER / VENTURI DIAMETER (MM)	PART NUMBER
GTR 215	36DA/36DB	10-22	159/83	▶(P/N 267 000 648)◀

GTX† SERIES				
MODEL	MODEL NUMBER	PITCH ANGLE (°)	IMPELLER / VENTURI DIAMETER (MM)	PART NUMBER
GTX 155	38DB/38DA	11-18	155/84	(P/N 267 000 629)
GTX S 155	33DB/33DA	11-18	155/84	(P/N 267 000 629)
GTX 215	42DA/42DB	10-21	159/83	▶(P/N 267 000 626)◀
GTX LIMITED iS 260	18DB/18DA	14-23	159/83	(P/N 267 000 623)

† GTX is a registered trademark of Castrol Ltd, used under license.

RXP™ SERIES				
MODEL	MODEL NUMBER	PITCH ANGLE (°)	IMPELLER / VENTURI DIAMETER (MM)	PART NUMBER
RXP-X 260	21DA	15-22	159/83	(P/N 267 000 631)
RXP-X 260 RS	21DB			

RXT™ SERIES				
MODEL	MODEL NUMBER	PITCH ANGLE (°)	IMPELLER / VENTURI DIAMETER (MM)	PART NUMBER
RXT 260	17DA	14-23	159/83	(P/N 267 000 623)
RXT 260 RS	17DB			
RXT-X 260	31DA			
RXT-X 260 RS	31DB			
RXT-X aS 260	41DA			
RXT-X aS 260 RS	41DB			

WAKE™ SERIES				
MODEL	MODEL NUMBER	PITCH ANGLE (°)	IMPELLER / VENTURI DIAMETER (MM)	PART NUMBER
WAKE 155	35DB/35DA	11-18	155/84	(P/N 267 000 532)
WAKE PRO 215	26DA/26DB	10-21	159/83	▶(P/N 267 000 626)◀

HIGH ALTITUDE SPECIFICATIONS

Models equipped with variable trim system (VTS) must have nozzle set to 0° for optimum skiing facility.

NOTE: Test altitude: 1 676 m (5,500 ft).

GTI™ SERIES				
MODEL	MODEL NUMBER	PITCH ANGLE (°)	IMPELLER / VENTURI DIAMETER (MM)	PART NUMBER
GTI 130	23DB/23DD 23DC/23DA	11-17	155/84	(P/N 267 000 600)
GTI SE 130	24DB/24DA/24DC			
GTI Limited 155	39DB/39DA			(P/N 267 000 602)
GTI SE 155	30DA/30DB			

GTS™ SERIES				
MODEL	MODEL NUMBER	PITCH ANGLE (°)	IMPELLER / VENTURI DIAMETER (MM)	PART NUMBER
GTS 130	43DB/43DA	11-17	155/84	(P/N 267 000 600)
GTS RENTAL 130	25DB			

GTR™ SERIES				
MODEL	MODEL NUMBER	PITCH ANGLE (°)	IMPELLER / VENTURI DIAMETER (MM)	PART NUMBER
GTR 215	36DA/36DB	10-21	159/83	(P/N 267 000 452)

GTX† SERIES				
MODEL	MODEL NUMBER	PITCH ANGLE (°)	IMPELLER / VENTURI DIAMETER (MM)	PART NUMBER
GTX 155	38DB/38DA	11-16	155/84	(P/N 267 000 594)
GTX S 155	33DB/33DA	11-16	155/84	(P/N 267 000 594)
GTX 215	42DA/42DB	10-19	159/83	(P/N 267 000 596)
GTX LIMITED iS 260	18DB/18DA	14-22	159/83	(P/N 267 000 722)

RXP™ SERIES				
MODEL	MODEL NUMBER	PITCH ANGLE (°)	IMPELLER / VENTURI DIAMETER (MM)	PART NUMBER
RXP-X 260	21DA	14-23	159/83	(P/N 267 000 767)
RXP-X 260 RS	21DB			

RXT™ SERIES				
MODEL	MODEL NUMBER	PITCH ANGLE (°)	IMPELLER / VENTURI DIAMETER (MM)	PART NUMBER
RXT 260	17DA	14-22	159/83	(P/N 267 000 722)
RXT 260 RS	17DB			
RXT-X 260	31DA			
RXT-X 260 RS	31DB			
RXT-X aS 260	41DA			(P/N 267 000 722)
RXT-X aS 260 RS	41DB			

WAKE™ SERIES				
MODEL	MODEL NUMBER	PITCH ANGLE (°)	IMPELLER / VENTURI DIAMETER (MM)	PART NUMBER
WAKE 155	35DB/35DA	11-17	155/84	(P/N 267 000 602)
WAKE PRO 215	26DA/26DB	10-19	159/83	(P/N 267 000 596)

January 14, 2013 Subject: **Sea-Doo® Paint Codes & Gelcoat** No. **2013-4**

YEAR	MODEL	MODEL NUMBER	SERIAL NUMBER
2013	All	All	All

PAINT CODES

These paints should be used for minor touch-ups only.

Actual finish on hulls is gelcoat, not paint. See further in this bulletin for gelcoat information.

CORRESPONDING PAINT CODES			
BRP COLORS		B.A.S.F., R-M	PPG
B-160	Deep Black	85366, RM 85366	DCC 95066 / DBC 9554
B-176	Viper Red	94820	DCC 74790
B-181	Anthracite	N/A	935098
B-229	Bright White	757238	DCC-DG 917825
B-320	Casino Gold	870212	911117
B-321	Pure Magnesium	879305	931118
B-336	Dayglow Yellow	890196	935099
B-337	Orange Crush	890158	931114
B-338	Lucky Green	900896	931115
B-353	White	88643	DCC 98192
N/A: Information not available at time of printing.			

NOTE: Unless otherwise specified, gloss level for all colors is High.

©2013 Bombardier Recreational Products Inc. and BRP US Inc. All rights reserved.
®™ and the BRP logo are trademarks of Bombardier Recreational Products Inc. or its affiliates.

GELCOAT

This is a reminder that all liquid gelcoat and repair kits can be purchased directly from Gelcote‡ International Ltd. BRP does not distribute these products.

Gelcote International Ltd web site has all the Sea-Doo personal watercraft and Sport Boats gelcoat colors.

You can order on the web site and get confirmation of your order within hours. Quick, reliable service is what is offered to all BRP dealers around the world.

There are many services on this web site to make your ordering quick and informative. Or you can call Gelcote International directly with any question pertaining to gelcoat. Service, value and knowledge is what you can expect when you call Gelcote International.

Gelcote International Ltd
174 Colonnade Road Suite 29
Ottawa, Ontario
Canada, K2E 7J5

Phone: (613) 225-2177
Phone: (877) 435-2683 (Toll Free)
Fax: (613) 225-5297

Web Site: www.gelcoat.ca
E-mail: info@gelcote.com

‡ Gelcote is a trademark of Gelcote International Ltd

WATERCRAFT COLOR CODES

GTI Series



GTI, GTI SE AND GTI LIMITED

GTS Series



GTS RENTAL (INT'L) AND GTS

GTR Series



GTX Series



GTX



GTX LIMITED iS AND GTX S

RXT Series



RXT AND RXT RS

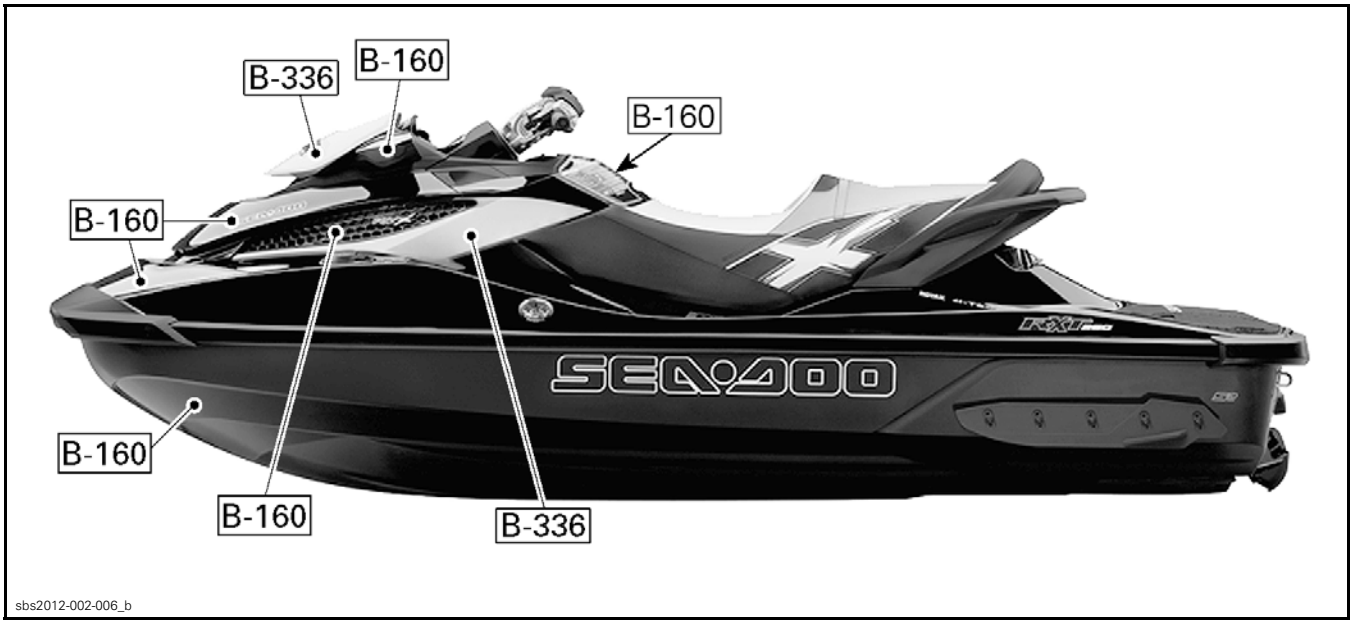

RXT-X AND RXT-X RS



RXT-X aS AND RXT-X RS aS

RXP Series

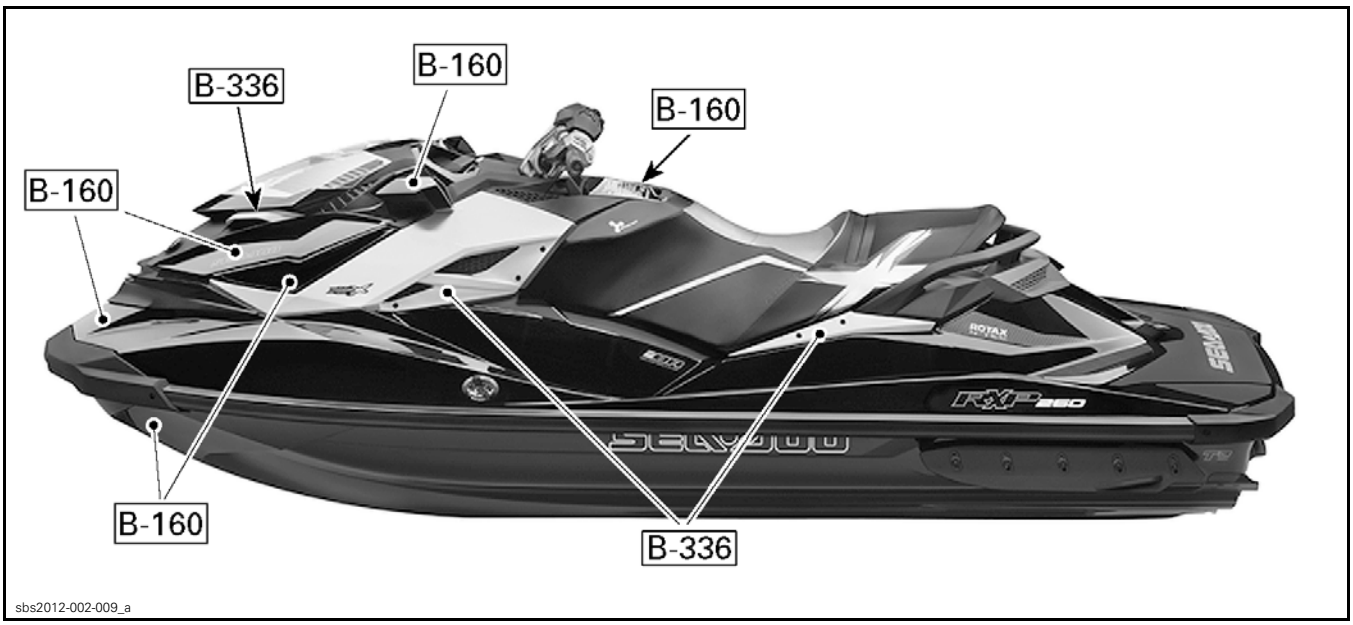

RXP-X AND RXP-X RS

WAKE Series

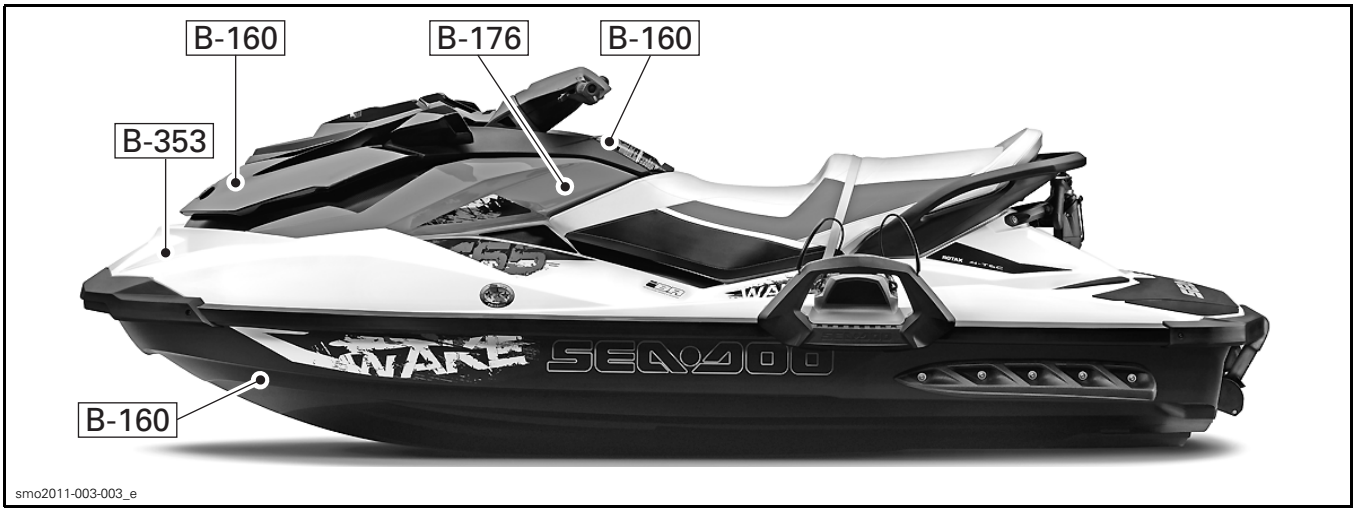

WAKE 155

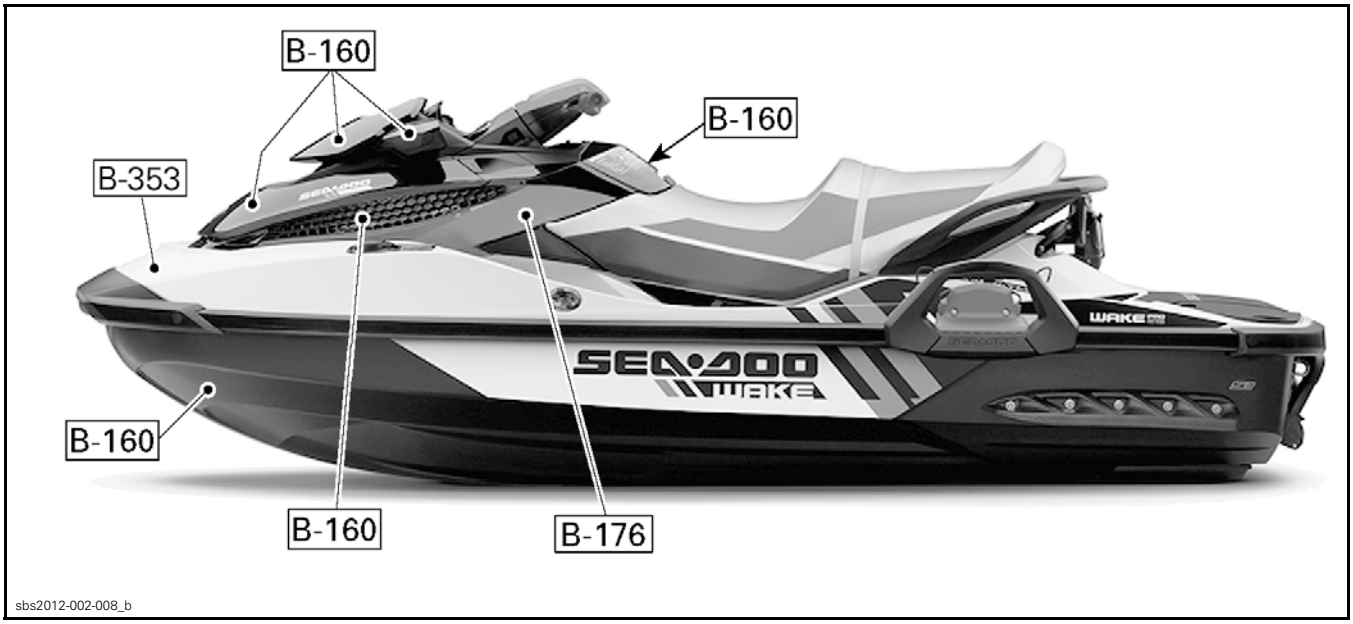

WAKE PRO 215

WATERCRAFT
SERVICE
Bulletin

October 4th, 2012 Subject: **Sea-Doo® Watercraft Batteries Activation, Charging and Maintenance** No. **2013-2**

YEAR	MODEL	MODEL NUMBER	SERIAL NUMBER
2013	All	All	All

GENERAL INFORMATIONS

As a reference to predelivery inspection bulletin, this service publication provides instructions for the activation, charging and maintenance of Sea-Doo watercraft batteries. It contains standard practices and can be used as a reference for preparing vehicles before delivery to customers.

For complete battery informations and detailed procedures, refer to appropriate *SEA-DOO SHOP MANUAL* and manufacturer's instructions.

Guidelines for MY2013

MY2013 standard vehicles are equipped with Yu-Micron† batteries. These batteries are **non-activated and non-filled**. They need electrolyte filling and readjustment.

However, MY2013 rental vehicles are equipped with a **maintenance free battery, factory activated**. This battery type is permanently sealed and never need to fill it with water or check the acid level.

STANDARD VEHICLES BATTERY (All except Rental)

Battery Activation (Standard)

1. Remove the sealing tube from the vent elbow.

⚠ WARNING

Failure to remove the sealing tube could result in an explosion.

2. Remove battery caps.
3. Fill battery to UPPER LEVEL line with electrolyte (specific gravity: 1.265 at 21°C (70°F)).

NOTE: This battery may fill slower than others due to the anti-spill check ball design acid packs.

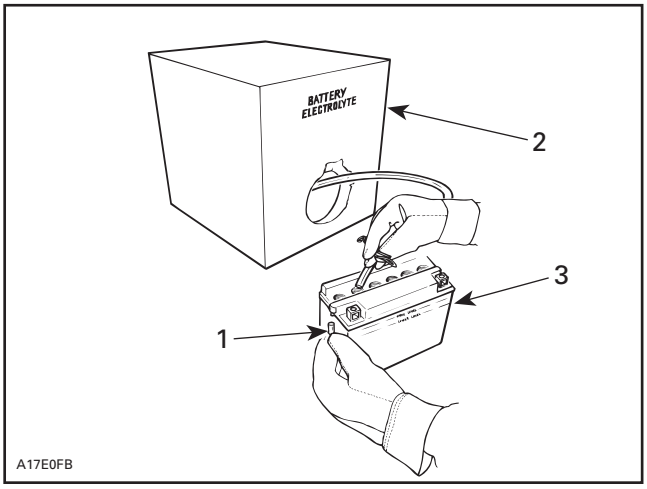

1. Sealing tube removed
2. Battery electrolyte
3. Upper level line

4. Allow the battery to stand for 30 minutes MINIMUM so that electrolyte soak through battery cells.

† YuMicron is a registered trademark of Yuasa Battery Inc.

©2012 Bombardier Recreational Products Inc. and BRP US Inc. All rights reserved.
®™ and the BRP logo are trademarks of Bombardier Recreational Products Inc. or its affiliates.

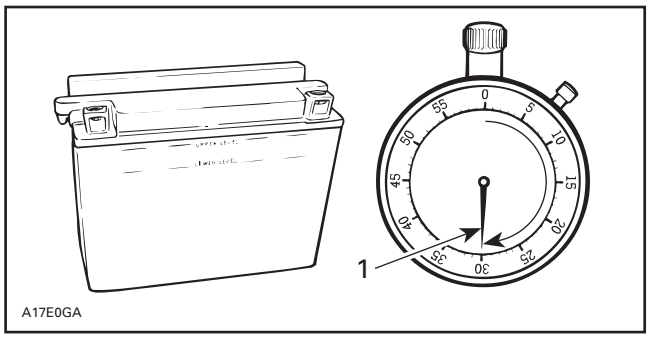

1. 30 minutes

5. Readjust the electrolyte level to the UPPER LEVEL line.

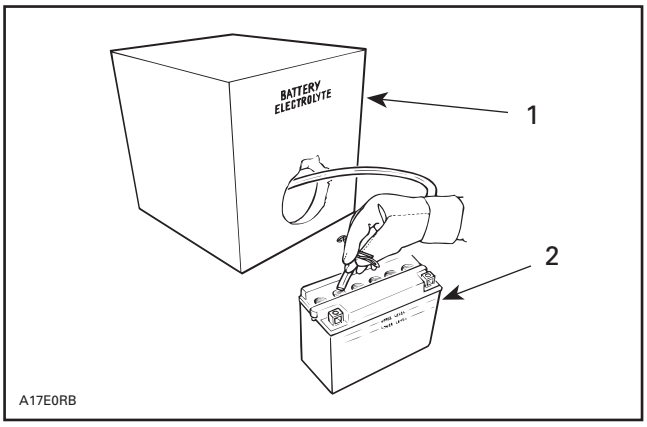

1. Battery electrolyte
2. Upper level line

Battery Charging (Standard)

Initial Charging

Newly activated batteries require an initial charge. Perform the following steps after activation procedure has been completed.

1. Connect a 2 A battery charger on battery.
2. Charge battery for 3 to 5 hours.

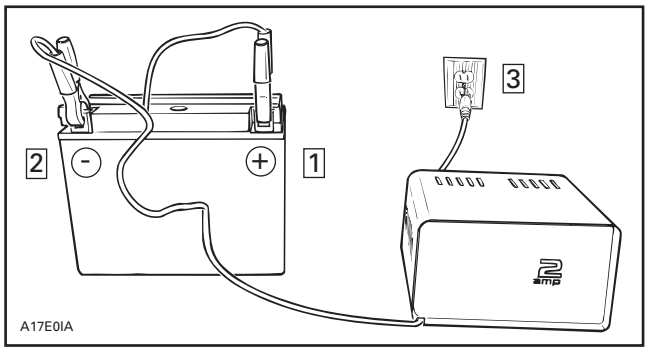

Step 1: Connect + lead to battery + post
Step 2: Connect - lead to battery - post
Step 3: Plug battery charger

NOTICE If charging rate raises higher than 3 A reduce it immediately. If cell temperature rises higher than 50°C (122°F) or if the casing feels hot, discontinue charging temporarily or reduce the charging rate.

3. Disconnect battery charger.

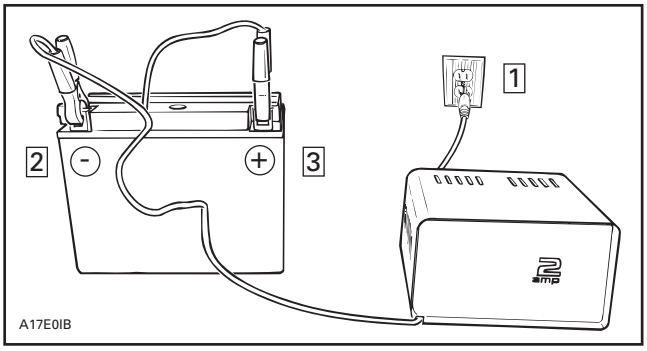

Step 1: Unplug battery charger
Step 2: Disconnect - lead
Step 3: Disconnect + lead

4. Wait 30 minutes before testing battery condition.

NOTE: Checking the battery condition quickly after disconnecting the charger can distorted the reading.

5. Test battery state of charge at 21°C (70°F) using a hydrometer.

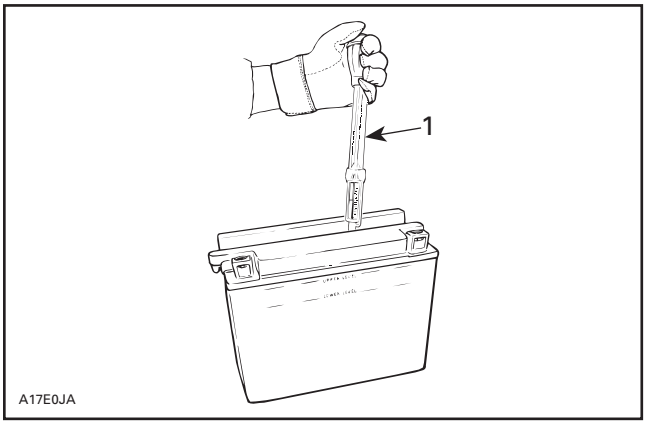

1. Specific gravity 1.265

6. Ensure that the hydrometer reading is as per the following specification:

BATTERY CONDITION	SPECIFIC GRAVITY	VOLTAGE
Fully Charged	1.265 - 1.280	12.6 - 12.8 Vdc

NOTE: If the temperature is not 21°C (70°F), corrections must be made to the hydrometer reading, refer to appropriate *SEA-DOO SHOP MANUAL* for details.

NOTE: If electrolyte level has dropped after charging, fill with distilled water to UPPER LEVEL line. After water is added, continue charging for 1 to 2 hours to mix water with electrolyte.

7. Hand tighten caps then tighten an additional 1/4 turn using a 20 mm (3/4 in) socket.
8. Clean any electrolyte spillage using a solution of baking soda and water.

NOTICE Do not overtighten the plastic battery caps in order to avoid damaging them.

⚠ WARNING

Battery electrolyte is caustic. To prevent spillage, battery cell caps should be sufficiently tight to properly seal.

Routine Charging

New non-filled battery has an indefinite shelf life as long as it remains dry sealed, with the red cap in place, and stored at room temperature.

Once it is unsealed, a battery should be activated, charged and installed on vehicle. The plates of an unsealed, uncharged battery begin to oxidize. That makes it more difficult to charge later.

As a result, no charging routine is required. The best way to proceed is to activate and charge the battery right before delivering to customer.

Battery Maintenance (Standard)

A battery requires little maintenance to perform perfectly. Follow this simple check list for optimum battery performance:

– Check electrolyte level every month.
– Keep electrolyte level to UPPER LEVEL line and fill with distilled water as necessary.
– Check specific gravity or voltage readings every month.
– Keep a battery fully charged to 100%.
– Make sure vent tube is free of kinks or clogs.
– Keep the battery top free of grime.
– Clean terminals and connectors as necessary.

RENTAL VEHICLES BATTERY

Battery Activation (Rental)

Since rental vehicle batteries are factory activated, they never need to be activated using acid packs. The electrolytes are already in the batteries.

Initial Charging (Rental)

Factory activated batteries require an initial charge.

If you are using a constant current charger, refer to the standard (STD) charging method printed on the battery.



vbl2006-004-007

If you are using an automatic type taper charger, check to make sure that the charger current (amps) is equal to or greater than the standard (STD) charging method listed on the battery.

These batteries are a sealed construction; **never remove the sealing strip after charging is completed.** If the battery gets very hot to the touch, cease charging and allow battery to cool down. Check voltage using a voltmeter. Reading for a charged, newly-activated battery should be 12.8 volts or higher after the battery is charged and sits for at least 1 – 2 hours. If less, it needs and additional charge.

Routine Charging (Rental)

NOTICE Overcharging can harm the battery beyond recovery.

The single most important thing to maintaining a battery is to not let it sit discharged: keep it fully charged. A sealed battery should be kept to near fully charged for peak performance. In fact, it can need charging more often than a car battery because it's probably not used routinely and, therefore, not "automatically" charged.

Use the following guidelines for boost charge. Always verify battery condition before charging, and 30 minutes after charging.

– A fully charged battery should read 12.8V or higher after battery has been off the charger 1 hour.
– It is not recommended to overcharge sealed batteries. Because of their characteristics, too much of a boost charge will decrease the volume of electrolyte. The longer the overcharge time, the greater the drop in electrolyte – and starting power.
– Charge a battery at a rate equal to 1/10 of its rated capacity.

Refer to the following tables for charging routine.

Note that charging times can vary depending on type of charger. Follow the charger's instructions for details.

STATE OF CHARGE : 100%		
VOLTAGE	ACTION	CHARGE TIME *
12.8 – 13.0	None Check at 3 months from date of manufacture	None required
* Approximate charge time using a 1 AMP constant current charger		

STATE OF CHARGE : 75% - 100%		
VOLTAGE	ACTION	CHARGE TIME *
12.5 – 12.8	May need slight charge, if no charge given, check in 3 months	3 – 6 hours
* Approximate charge time using a 1 AMP constant current charger		

STATE OF CHARGE : 50% - 75%		
VOLTAGE	ACTION	CHARGE TIME *
12.0 – 12.5	Need charge	5 – 11 hours
* Approximate charge time using a 1 AMP constant current charger		

STATE OF CHARGE : 25% - 50%		
VOLTAGE	ACTION	CHARGE TIME *
11.8 – 12.0	Need charge	At least 13 hours verify state of charge
* Approximate charge time using a 1 AMP constant current charger		

STATE OF CHARGE : 0% - 25%		
VOLTAGE	ACTION	CHARGE TIME *
11.8 or less (see instructions below)	Need charge	20 hours
* Approximate charge time using a 1 AMP constant current charger		

Charging for Voltage of 11.5 or Less (Rental)

Batteries with voltage below 11.5 V may require special equipment and procedures to recharge.

In charging an over discharged battery having a terminal voltage of 11.5 V or lower, its internal resistance may be too high to charge at a normal charge voltage.

Therefore, it may be necessary to raise the voltage of the battery initially (25 V as a maximum), and charge for approximately 5 minutes. If the ammeter shows no change in current after 5 minutes, you need a new battery.

Current flowing into the battery at high voltage can become excessive. Monitor amperage and adjust voltage as necessary to keep current at the battery's standard amp rating. Charge for approximately 20 hours.

Battery Maintenance (Rental)

A battery requires little maintenance to perform perfectly. Follow this simple check list for optimum battery performance:

– Check voltage every 3 months using a voltmeter.
– Keep a battery fully charged to 100% (12.8v - 13.0v after standing 1 - 2 hours).
– Check and charge battery if the voltage drops below 12.5v.
– Keep the battery top free of grime.
– Clean terminals and connectors as necessary.

BATTERY STORAGE

All Vehicle

Battery storage is critical for battery life, it is important to follow the battery maintenance check list to keep an optimal condition.

Always remove battery from vehicle for storage. Keeping the battery in vehicle for storage may lead to contacts degradation/corrosion and case damage if freezing occurs. A discharged battery

will freeze and break in area where freezing point is experienced. Electrolyte leakage will damage surrounding parts.

Regularly charging the battery during storage will prevent cell sulfation.

Keep in mind that higher storage temperatures cause faster self-discharge and require checking more often.

BATTERY CARE REMINDER

All Vehicle

Through proper maintenance and care, today's modern batteries can survive long storage periods, however one must adhere to the proper maintenance procedures as specified in this bulletin.

It is a good practice to strictly follow all activated batteries and apply the maintenance procedure to keep them at a high level of performance.

All batteries which did not receive proper periodic maintenance will not be covered by the warranty.

SAFETY WARNING

Here are important safety things to keep in mind before working with batteries. Any person who intends to work with batteries should read and understand the information contained on the following safety warnings before doing so.

⚠ WARNING

- Absolutely no smoking, sparks or open flames around batteries. Batteries can produce hydrogen and oxygen; if they ignite the battery can rupture.
- Properly connect charger to battery: positive to positive, negative to negative. Unplug the charger or turn it off before you disconnect the leads; that cuts down on the chance of sparks.
- Always wear eye protection, protective gloves and protective clothing.
- Clean up acid spills immediately, using a water and baking soda solution to neutralize.

⚠ WARNING

- If sulfuric acid is swallowed or splashed in the eyes, take immediate action. While the diluted sulfuric acid used as electrolyte can burn the skin, this type of injury is generally less serious. Sulfuric acid in the eyes can cause blindness. Serious internal injuries or death can result from ingesting sulfuric acid.
- Always ventilate battery charging area.
- Never charge or boost battery while installed on vehicle.
- Always connect battery cables exactly in the specified order. Connect RED positive cable first, then BLACK negative ground cable.
- Make sure the vent tube is not kinked or blocked.
- Make sure acid container is clearly marked and the work area is well lighted.
- Make sure batteries are stored out of the reach of children.

NOTICE

- Store the battery in a cool, dry place out of direct sunlight.
- The sealed VRLA battery will not be topped off during its life. Never pry off sealing caps. Water cannot be added to the sealed VRLA battery.
- Always stop charging if the battery becomes really warm to the touch. Let it cool down for 6 - 12 hours and resume charging. Overcharging can warp plates, making future charging difficult or impossible. Watch charging times carefully, or ideally, use a Yuasa† Automatic Charger. A battery that's too hot can rupture.
- Never put the red sealing cap back on the battery once you take it off.

† Yuasa is a registered trademark of Yuasa Battery Inc.