2016 SeaDoo GTX / RXT / Wake Pro 155-260 Hp Series

This manual may cover later years than listed above.

I have combined the base manual along with all the needed updates and the 2016 supplemental manual into one easy to use manual

If you bought this manual from any other seller, they are reselling my work.

Please leave them negative feedback & email me at bestshopmanuals@gmail.com.

Our goal is to be one of the BEST sellers on eBay and the internet by providing you with the BEST customer service and the BEST manuals on the market.

Thank you for choosing us.

Green-Manuals

Paperless Manuals
For a Better Tomorrow

Hi-Definition Manual

Midwest Manuals

SAFETY NOTICE

This manual has been prepared as a guide to correctly service and repair 2016 Sea-Doo® watercraft as described in the model list in the *INTRODUCTION*.

This edition was primarily published to be used by technicians who are already familiar with all service procedures relating to BRP products. Mechanical technicians should attend training courses given by BRPTI.

Please note that the instructions will apply only if proper hand tools and special service tools are used.

The contents of this manual depicts parts and procedures applicable to the particular product at the time of writing. Service and Warranty Bulletins may be published to update the content of this manual. Dealer modifications that were carried out after manufacturing of the product, whether or not authorized by BRP, are not included.

In addition, the sole purpose of the illustrations throughout the manual, is to assist identification of the general configuration of the parts. They are not to be interpreted as technical drawings or exact replicas of the parts.

The use of BRP parts is most strongly recommended when considering replacement of any component. Dealer and/or distributor assistance should be sought in case of doubt.

The engines and the corresponding components identified in this document should not be utilized on product(s) other than those mentioned in this document.

It is understood that certain modifications may render use of the watercraft illegal under existing federal, provincial and state regulations.

This manual emphasizes particular information denoted by the following wording and symbols:

⚠ WARNING

Indicates a potential hazard that, if not avoided, could result in serious injury or death.

⚠ CAUTION **Indicates a hazardous situation which, if not avoided, could result in minor or moderate injury.**

NOTICE **Indicates an instruction which, if not followed, could result in severe damage to vehicle components or other property.**

NOTE: Indicates supplementary information required to fully complete an instruction.

Although the mere reading of such information does not eliminate the hazard, your understanding of the information will promote its correct use.

Always observe common shop safety practice.

Unless otherwise noted, the engine must be stopped and the tether cord must be removed prior to perform any services.

Before carrying out any inspection or maintenance procedure on the watercraft, wait until the engine and exhaust have cooled down to avoid potential burns.

Torque wrench tightening specifications must be strictly adhered to. Use the torque values and service products as in the exploded views or in the procedures when noted.

Locking devices when removed must be replaced (e.g.: locking tabs, elastic stop nuts, self-locking fasteners, cotter pins, etc.).

Hoses, cables and locking ties removed during a procedure must be reinstalled as per factory standards.

When ordering parts always refer to the specific model *PARTS CATALOG*.

We strongly recommend that any services be carried out and/or verified by a highly skilled professional mechanic.

It is understood that this manual may be translated into another language. In the event of any discrepancy, the English version shall prevail.

BRP disclaims liability for all damages and/or injuries resulting from the improper use of the contents.

INTRODUCTION

This shop manual covers the following BRP made 2016 Sea-Doo watercraft models.

MODEL
GTX† Series
GTX 155
GTX S 155
GTX LIMITED 215
GTX LIMITED iS 260
RXP™ Series
RXT™ Series
RXT 260
RXT 260 RS
RXT-X aS 260
RXT-X aS 260 RS
WAKE Series
WAKE PRO 215

The information and component/system descriptions contained in this manual are correct at time of writing. BRP however, maintains a policy of continuous improvement of its products without imposing upon itself any obligation to install them on products previously manufactured.

Due to late changes, there may be some differences between the manufactured product and the description and/or specifications in this document.

BRP reserves the right at any time to discontinue or change specifications, designs, features, models or equipment without incurring obligation.

VEHICLE INFORMATION

HULL IDENTIFICATION NUMBER (HIN)

The hull identification number is composed of 12 digits:

YDV	12345	L	4	95
				Model year
			Year of production	
		Month of production		
	Serial number (a letter may also be used as a digit)			
Manufacturer				

It is located on the deck at the rear of watercraft.

smo2009-002-131_b

TYPICAL
1. Hull Identification Number (HIN) - aS and iS models

smr2010-034-001_a

TYPICAL
1. Hull Identification Number (HIN) - models without aS and iS

ENGINE IDENTIFICATION NUMBER (EIN)

The Engine Identification Number is located on front end of the engine.

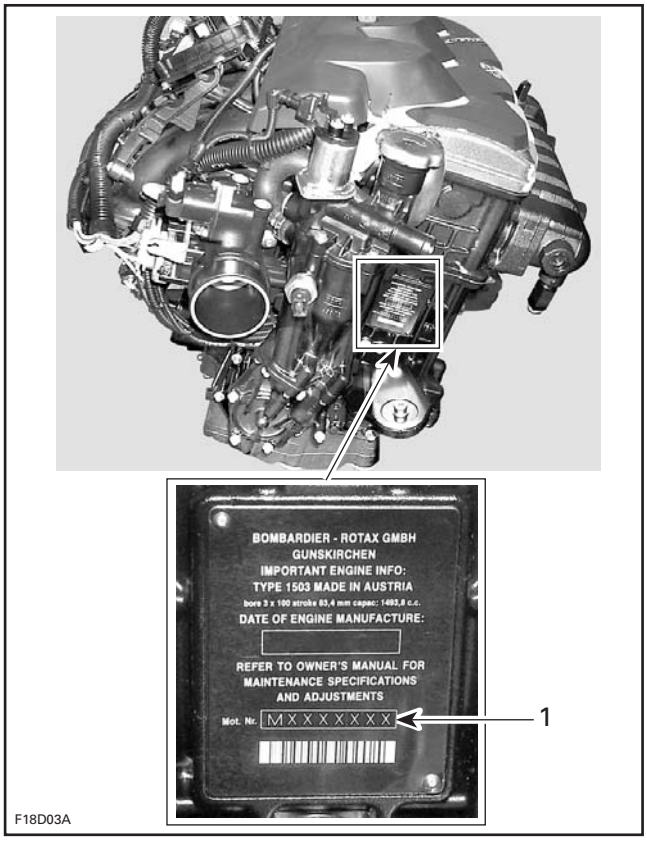

TYPICAL
1. *Engine Identification Number (EIN)*

HOISTING A WATERCRAFT

To work on a watercraft, you should mount it securely on a stand.

The LIFTING STRAP (P/N 529 036 189) MUST be used to hoist and mount the watercraft on a stand.

NOTICE **Using any other lifting strap kit than the one recommended may cause damage to the vehicle. Bumpers could be torn off.**

TYPICAL

ENGINE EMISSIONS INFORMATION

Manufacturer's Responsibility

Manufacturers of engines must determine the exhaust emission levels for each engine horsepower family and certify these engines with the United States of America Environmental Protection Agency (EPA). An emissions control information label, showing emission levels and engine specifications, must be placed on each vehicle at the time of manufacture.

Dealer Responsibility

When servicing any vehicle that carry an emissions control information label, adjustments must be kept within published factory specifications.

Replacement or repair of any emission related component must be executed in a manner that maintains emission levels within the prescribed certification standards.

Dealers are not to modify the engine in any manner that would alter the horsepower or allow emission levels to exceed their predetermined factory specifications.

Exceptions include manufacturers' prescribed changes, such as altitude adjustments.

Owner Responsibility

The owner/operator is required to have engine maintenance performed to maintain emission levels within prescribed certification standards.

The owner/operator is not to, and should not allow anyone else to modify the engine in any manner that would alter the horsepower or allow emissions levels to exceed their predetermined factory specifications.

Emission Regulations

The vehicle you are servicing may have been certified to applicable emission regulations in your country or state. Not as an exhaustive list; this may include standards for engine exhaust emissions, crankcase emissions, permeation emissions and evaporative emissions. Servicing procedures in this manual must be strictly followed in order to keep the vehicle within the factory specifications. Failure to follow servicing procedures in this manual may lead a vehicle to be out of compliance with applicable emission regulations.

When servicing any vehicle; adjustments must be kept within published factory specifications. Replacement or repair of any emission related component must be executed in a manner that maintains emission levels within the applicable certification standards. Nobody is allowed to modify the engine in any manner that would alter the horsepower or allow emission levels to exceed their predetermined factory specifications. Exceptions include manufacturer's prescribed changes.

The owner/operator is required to have engine maintenance performed to maintain emission levels within the prescribed certification standards. The owner/operator is allowed and should not allow anyone else to modify the engine in any manner that would alter the horsepower or allow emissions levels to exceed their predetermined factory specifications.

MANUAL INFORMATION

MANUAL PROCEDURES

Many of the procedures in this manual are interrelated. Before undertaking any task, you should read and thoroughly understand the entire section or subsection in which the procedure is contained.

A number of procedures throughout the book require the use of special tools. Before commencing any procedure, be sure that you have on hand all the tools required, or their approved equivalents.

The use of RIGHT (starboard) and LEFT (port) indications in the text are always referenced to the driving position (when sitting on the watercraft).

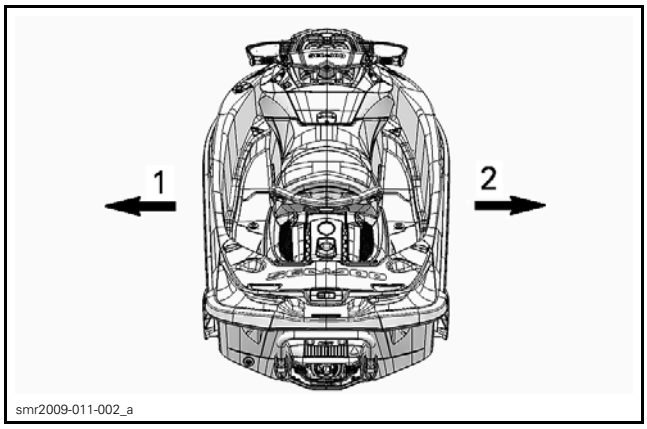

1. Left (port)
2. Right (starboard)

Other common terms used in the marine industry are the BOW (front of the watercraft), and the STERN (rear of the watercraft).

This manual uses technical terms which may be different from the ones in the *PARTS CATALOGS*.

MANUAL LAYOUT

This manual is divided into many major sections as can be seen in the main table of contents at the beginning of the manual.

Each section is divided into various subsections, and again, each subsection has one or more divisions.

Illustrations and photos show the typical construction of various assemblies and, in all cases, may not reproduce the full detail or exact shape of the parts used in a particular model vehicle. However, they represent parts which have the same or a similar function.

TYPICAL PAGE

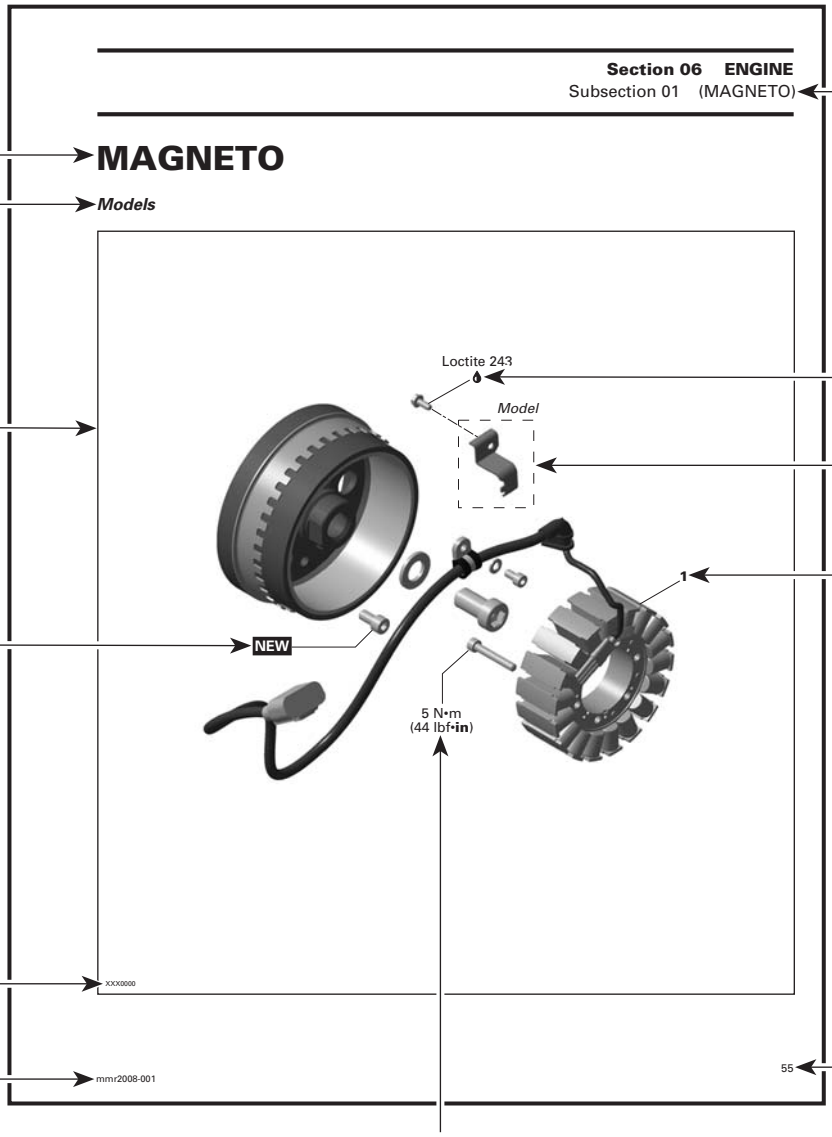

Page heading indicates section and subsection.

Subsection title

Indicates applicable models.

Exploded view assists you in identifying parts and their related positions.

NEW indicates that the part must be replaced with a new one.

Illustration number for publishing process.

Document number for publishing process.

Drop represents a service product to be applied.

Dotted box contains parts applicable to a specific model.

Bold face number is used to identify a part referred to the text.

Page number

Specific torque applicable to this installation.

NOTICE Pay attention to torque specifications.
Some of these are in lbf•**in** instead of lbf•ft.
Use appropriate torque wrench.

Typical_iso_2008_en

TYPICAL PAGE

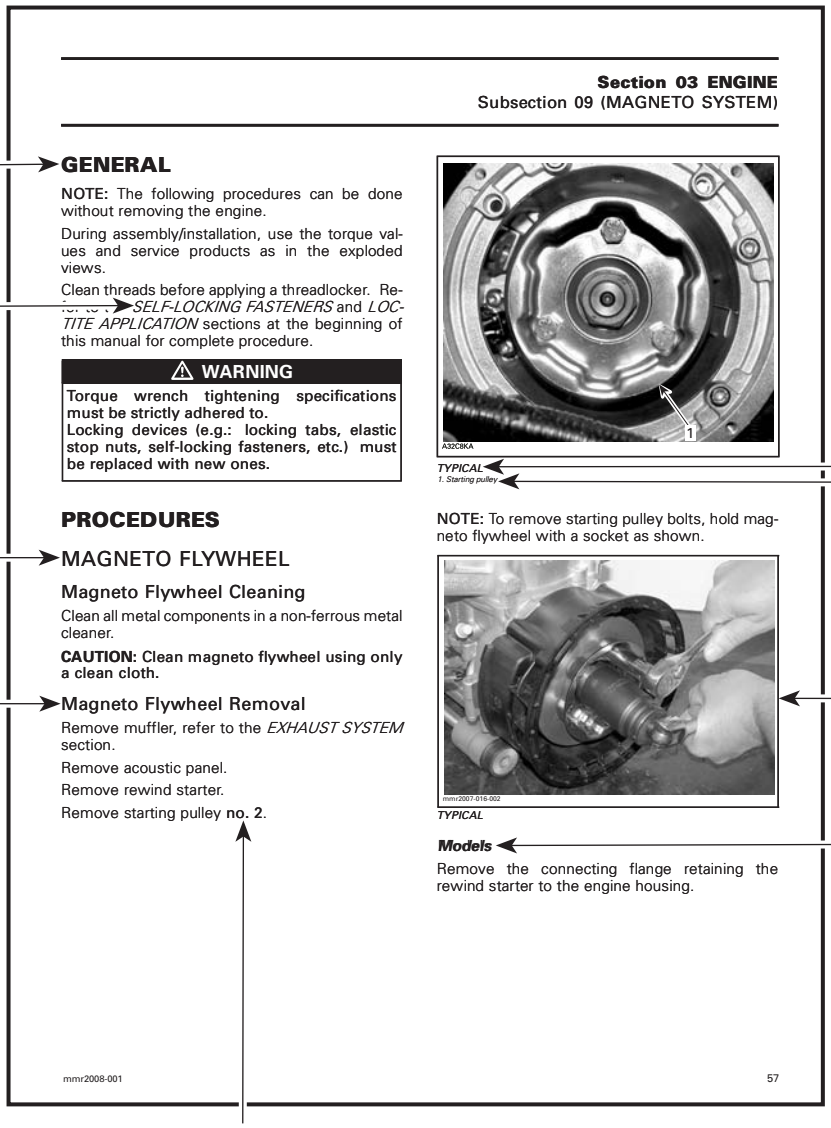

Section 03 ENGINE
Subsection 09 (MAGNETO SYSTEM)

GENERAL

NOTE: The following procedures can be done without removing the engine.

During assembly/installation, use the torque values and service products as in the exploded views.

Clean threads before applying a threadlocker. Refer to the *SELF-LOCKING FASTENERS* and *LOCTITE APPLICATION* sections at the beginning of this manual for complete procedure.

⚠ WARNING

Torque wrench tightening specifications must be strictly adhered to.
Locking devices (e.g.: locking tabs, elastic stop nuts, self-locking fasteners, etc.) must be replaced with new ones.

PROCEDURES

MAGNETO FLYWHEEL

Magneto Flywheel Cleaning

Clean all metal components in a non-ferrous metal cleaner.

CAUTION: Clean magneto flywheel using only a clean cloth.

Magneto Flywheel Removal

Remove muffler, refer to the *EXHAUST SYSTEM* section.

Remove acoustic panel.

Remove rewind starter.

Remove starting pulley **no. 2**.

A32C8KA

TYPICAL
1. Starting pulley

NOTE: To remove starting pulley bolts, hold magneto flywheel with a socket as shown.

mmr2007-016-002

TYPICAL

Models

Remove the connecting flange retaining the rewind starter to the engine housing.

mmr2008-001

57

Tittle in bold indicates category of information to be carried out.

Reference to a specific section or subsection.

Indicates component procedures apply to.

Indicates specific procedure to be carried out.

"TYPICAL" indicates a general view which may not represent exact details.

Call-outs pertaining to above illustration.

Illustration always follows text to which it applies.

Italic bold face typesetting indicates a procedure applicable to a specific model(s).

Bold face number following part name refers to exploded view at beginning of subsection.

typical_txt_2008_en

Midwest Manuals

Green Manuals
Paperless Manuals
For a Better Tomorrow

If you bought this manual from any other seller please leave them NEGATIVE feedback and notify me at bestshopmanuals@gmail.com

TIGHTENING TORQUE

Tighten fasteners to the torque specified in the exploded view(s) and/or in the written procedure. When a torque is not specified, the torque normally recommended for a specific fastener should be used. Refer to the following table.

⚠ WARNING

Torque wrench tightening specifications must be strictly adhered to.
Locking devices must be replaced when removed (e.g.: locking tabs, elastic stop nuts, self-locking fasteners, cotter pins, etc.).

In order to avoid a poor assembly, tighten screws, bolts, or nuts in accordance with the following procedure:

1. Manually screw all screws, bolts and/or nuts.
2. Apply half the recommended torque value.

NOTICE **Be sure to use the recommended tightening torque for the specified fastener used.**

NOTE: Whenever possible, always apply torque on the nut.

3. Tighten fastener to the recommended torque value.

NOTE: Always torque screws, bolts and/or nuts using a crisscross pattern when multiple fasteners are used to secure a part (e.g. a cylinder head). Some parts must be torqued according to a specific sequence and torque pattern as detailed in the installation procedure.

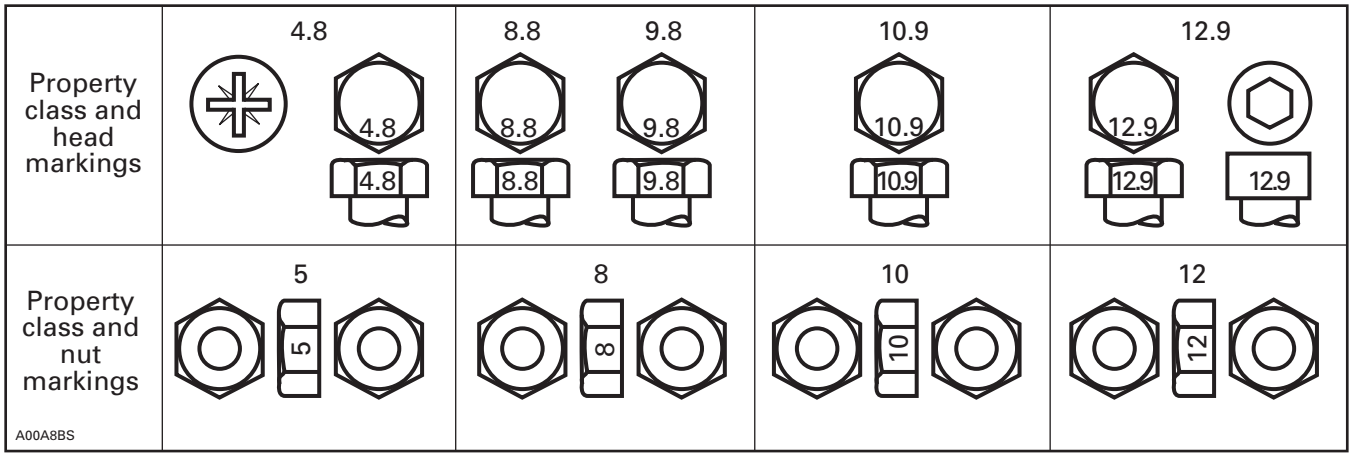

FASTENER SIZE	FASTENER GRADE/TORQUE			
	5.8 Grade	**8.8 Grade**	**10.9 Grade**	**12.9 Grade**
M4	1.5 N•m - 2 N•m (13 lbf•**in** - 18 lbf•**in**)	2.5 N•m - 3 N•m (22 lbf•**in** - 27 lbf•**in**)	3.5 N•m - 4 N•m (31 lbf•**in** - 35 lbf•**in**)	4 N•m - 5 N•m (35 lbf•**in** - 44 lbf•**in**)
M5	3 N•m - 3.5 N•m (27 lbf•**in** - 31 lbf•**in**)	4.5 N•m - 5.5 N•m (40 lbf•**in** - 49 lbf•**in**)	7 N•m - 8.5 N•m (62 lbf•**in** - 75 lbf•**in**)	8 N•m - 10 N•m (71 lbf•**in** - 89 lbf•**in**)
M6	6.5 N•m - 8.5 N•m (58 lbf•**in** - 75 lbf•**in**)	8 N•m - 12 N•m (71 lbf•**in** - 106 lbf•**in**)	10.5 N•m - 15 N•m (93 lbf•**in** - 133 lbf•**in**)	16 N•m (142 lbf•**in**)
M8	15 N•m (133 lbf•**in**)	25 N•m (18 lbf•ft)	32 N•m (24 lbf•ft)	40 N•m (30 lbf•ft)
M10	29 N•m (21 lbf•ft)	48 N•m (35 lbf•ft)	61 N•m (45 lbf•ft)	73 N•m (54 lbf•ft)
M12	52 N•m (38 lbf•ft)	85 N•m (63 lbf•ft)	105 N•m (77 lbf•ft)	128 N•m (94 lbf•ft)
M14	85 N•m (63 lbf•ft)	135 N•m (100 lbf•ft)	170 N•m (125 lbf•ft)	200 N•m (148 lbf•ft)

FASTENER INFORMATION

NOTICE Most fasteners are metric. Mismatched or incorrect fasteners could cause damage to the vehicle.

SELF-LOCKING FASTENER PROCEDURE

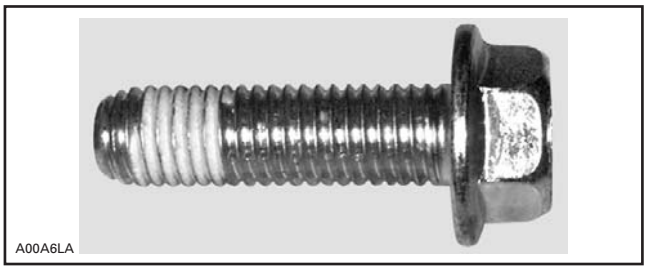

TYPICAL — SELF-LOCKING FASTENER

The following describes common procedures used when working with self-locking fasteners.

Use a metal brush or a tap to clean the hole properly, then use a solvent. Allow the solvent time to act, approximately 30 minutes, then wipe off. Solvent utilization is to ensure proper adhesion of the product used for locking the fastener.

LOCTITE® APPLICATION PROCEDURE

The following describes common procedures used when working with Loctite products.

NOTE: Always use proper strength Loctite product as recommended in this Shop Manual.

NOTICE When applying threadlocker products (anaerobic products), pay attention to prevent the product from coming into contact with ABS plastic parts (painted parts).

Threadlocker Application for Uncovered Holes (Bolts and Nuts)

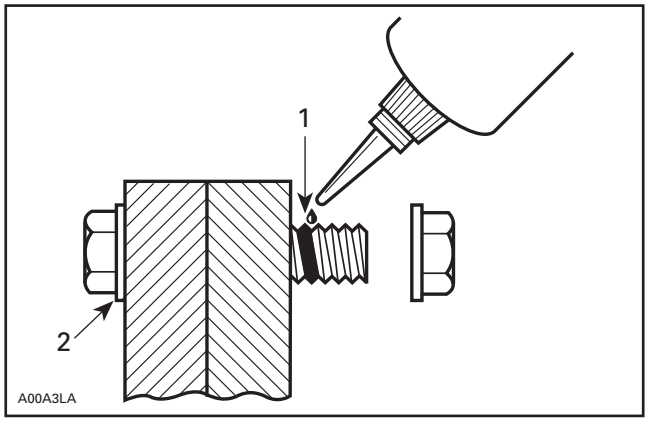

1. Apply here
2. Do not apply

1. Clean threads (bolt and nut) with solvent.
2. Apply LOCTITE 7649 (PRIMER) (P/N 293 800 041) on threads and allow to dry.
3. Choose proper strength Loctite threadlocker.
4. Fit bolt in the hole.
5. Apply a few drops of threadlocker at proposed tightened nut engagement area.
6. Position nut and tighten as required.

Threadlocker Application for Blind Holes

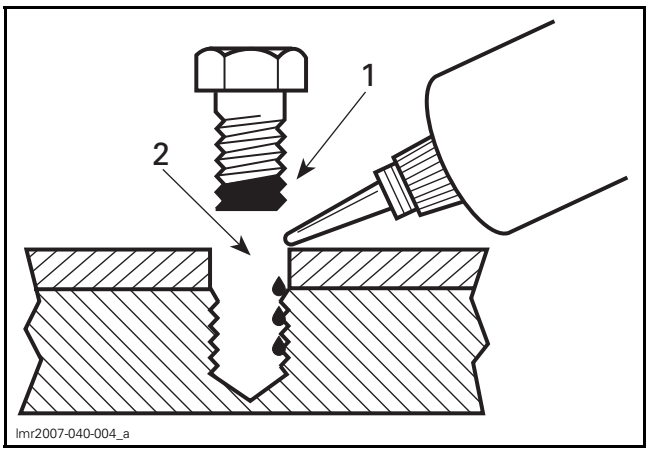

1. On fastener threads
2. On threads and at the bottom of hole

1. Clean threads (bolt and hole) with solvent.
2. Apply LOCTITE 7649 (PRIMER) (P/N 293 800 041) on threads (bolt and nut) and allow to dry for 30 seconds.
3. Choose proper strength Loctite threadlocker.

4. Apply several drops along the threaded hole and at the bottom of the hole.
5. Apply several drops on bolt threads.
6. Tighten as required.

Threadlocker Application for Stud Installation in Blind Holes

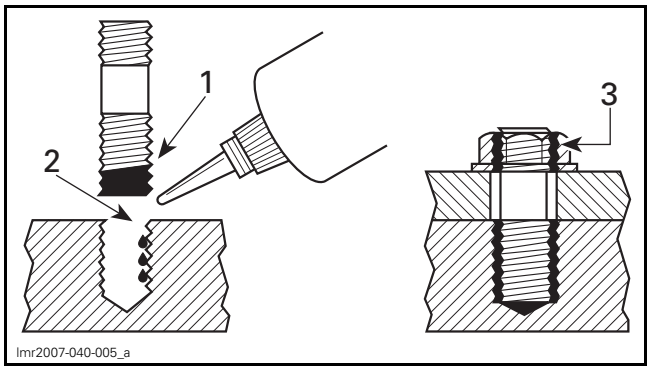

1. On stud threads
2. On threads and in the hole
3. On retaining nut threads

1. Clean threads (stud and hole) with solvent.
2. Apply LOCTITE 7649 (PRIMER) (P/N 293 800 041) on threads and allow to dry.
3. Put 2 or 3 drops of proper strength Loctite threadlocker on female threads and in hole.

NOTE: To avoid a hydro lock situation, do not apply too much Loctite.

4. Apply several drops of proper strength Loctite on stud threads.
5. Install stud.
6. Install cover, part, etc.
7. Apply a few drops of proper strength Loctite on uncovered stud threads.
8. Install and tighten retaining nut(s) as required.

Threadlocker Application for Pre-Assembled Parts

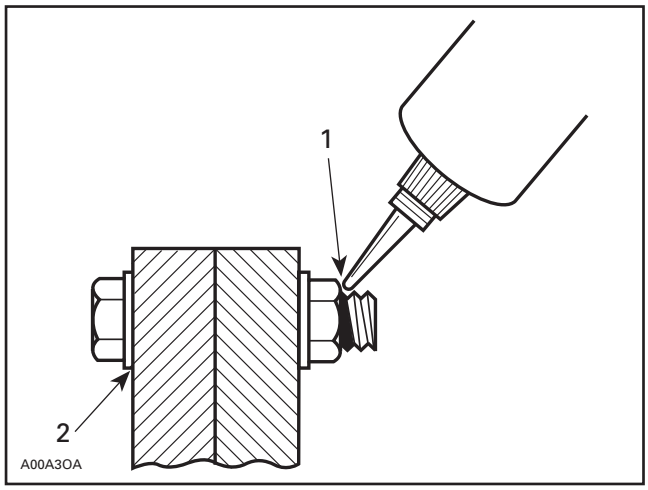

1. Apply here
2. Do not apply

1. Clean bolts and nuts with solvent.
2. Assemble components.
3. Tighten nuts.
4. Apply a few drops of proper strength Loctite on bolt/nut contact surfaces.
5. Avoid touching metal with tip of flask.

NOTE: For preventive maintenance on existing equipment, retighten nuts and apply proper strength Loctite on bolt/nut contact surfaces.

Threadlocker Application for an Adjustment Screw

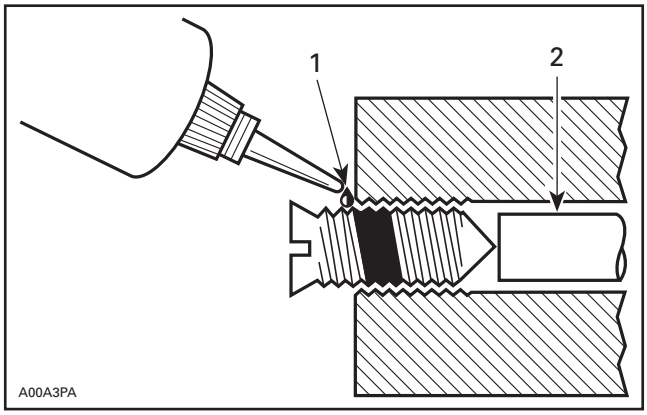

1. Apply here
2. Plunger

1. Adjust screw to proper setting.
2. Apply a few drops of proper strength Loctite threadlocker on screw/body contact surfaces.
3. Avoid touching metal with tip of flask.

NOTE: If it is difficult to readjust, heat screw with a soldering iron (232°C (450°F)).

Application for Stripped Thread Repair

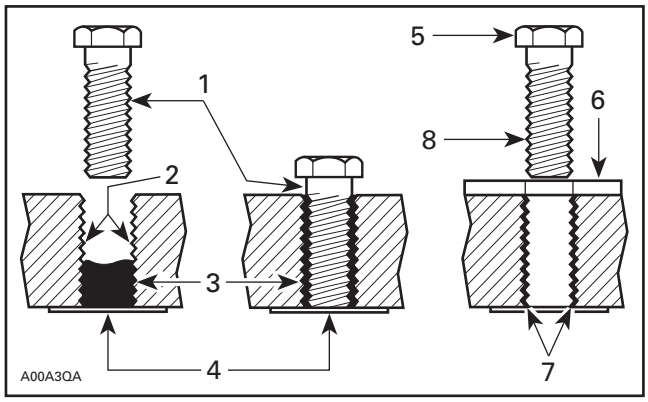

1. *Release agent*
2. *Stripped threads*
3. *Form-A-Thread*
4. *Tape*
5. *Cleaned bolt*
6. *Plate*
7. *New threads*
8. *Threadlocker*

Standard Thread Repair

Follow instructions on Loctite FORM-A-THREAD 81668 package.

If a plate is used to align bolt:

1. Apply release agent on mating surfaces.
2. Put waxed paper or similar film on the surfaces.
3. Twist bolt when inserting it to improve thread conformation.

NOTE: NOT intended for engine stud repairs.

Repair of Small Holes/Fine Threads

Option 1: Enlarge damaged hole, then follow *STANDARD THREAD REPAIR* procedure.

Option 2: Apply FORM-A-THREAD on the screw and insert in damaged hole.

Permanent Stud Installation (Light Duty)

1. Use a stud of the desired thread length.
2. DO NOT apply release agent on stud.
3. Follow Standard Thread Repair procedure.
4. Allow 30 minutes for Loctite FORM-A-THREAD to cure.
5. Complete part assembly.

Gasket Compound Application

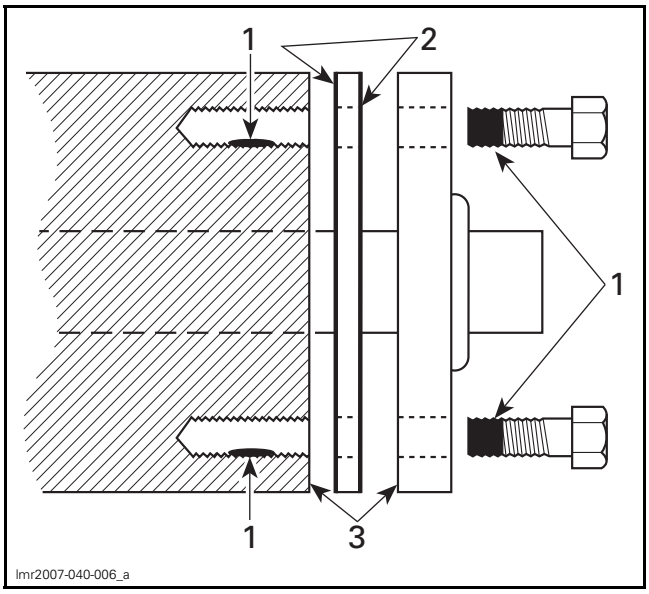

1. *Proper strength Loctite*
2. *Loctite Primer N (P/N 293 800 041) and Gasket Eliminator 518 (P/N 293 800 038) on both sides of gasket*
3. *Loctite Primer N only*

1. Remove old gasket and other contaminants using LOCTITE CHISEL (GASKET REMOVER) (P/N 413 708 500). Use a mechanical means only if necessary.

NOTE: Avoid grinding.

2. Clean both mating surfaces with solvent.
3. Spray Loctite Primer N on both mating surfaces and on both sides of gasket and allow to dry 1 or 2 minutes.
4. Apply LOCTITE 518 (P/N 293 800 038) on both sides of gasket, using a clean applicator.
5. Place gasket on mating surfaces and assemble parts immediately.

NOTE: If the cover is bolted to blind holes, apply proper strength Loctite in the hole and on threads. Tighten fastener.

If holes are sunken, apply proper strength Loctite on bolt threads.

6. Tighten as usual.

Threadlocker Application for Mounting on a Shaft

Mounting with a Press

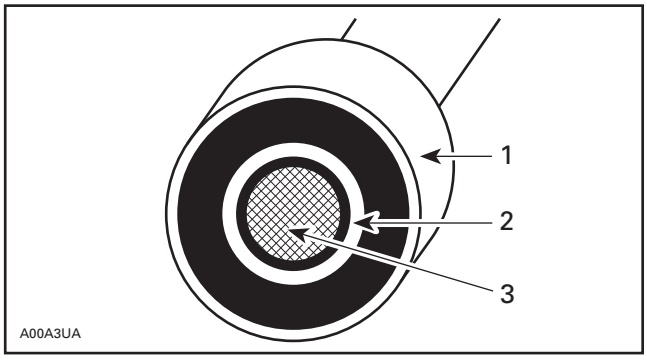

1. Bearing
2. Proper strength Loctite
3. Shaft

1. Clean shaft external contact surface.
2. Clean internal contact surface of part to be installed on shaft.
3. Apply a strip of proper strength Loctite on circumference of shaft contact surface at insertion or engagement point.

NOTE: Retaining compound is always forced out when applied on shaft.

4. DO NOT use antiseize Loctite or any similar product.
5. No curing period is required.

Mounting in Tandem

1. Apply retaining compound on internal contact surface (bore) of parts to be installed.
2. Continue parts assembly as per previous illustration.

Threadlocker Application for Case-In Components (Metallic Gaskets)

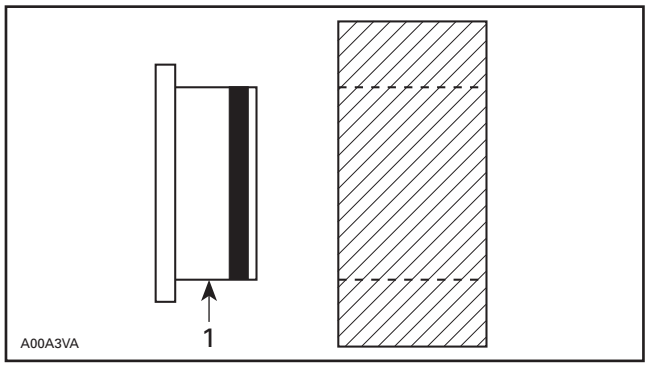

1. Proper strength Loctite

1. Clean inner housing diameter and outer gasket diameter.
2. Spray housing and gasket with LOCTITE 7649 (PRIMER) (P/N 293 800 041).
3. Apply a strip of proper strength Loctite on leading edge of outer metallic gasket diameter.

NOTE: Any Loctite product can be used here. A low strength liquid is recommended as normal strength and gap are required.

4. Install according to standard procedure.
5. Wipe off excess product.
6. Allow 30 minutes for product to cure.

NOTE: Normally used on worn-out housings to prevent leaking or sliding.

It is generally not necessary to remove gasket compound applied on outer gasket diameter.

MAINTENANCE SCHEDULE

Maintenance is very important for keeping the watercraft in a safe operating condition. The watercraft should be serviced as per the maintenance schedule.

A repair shop or person of the owner's choosing may maintain, replace, or repair emission control devices and systems. These instructions do not require components or service by BRP or authorized Sea-Doo dealers. Although an authorized Sea-Doo dealer has an in-depth technical knowledge and tools to service the Sea-Doo personal watercraft, the emission-related warranty is not conditioned on the use of an authorized Sea-Doo dealer or any other establishment with which BRP has a commercial relationship. For emission-related warranty claims, BRP is limiting the diagnosis and repair of emission-related parts to the authorized Sea-Doo dealers. For more information, please refer to the *US EPA EMISSION-RELATED WARRANTY* contained herein. Proper maintenance is the owner’s responsibility. A warranty claim may be denied if, among other things, the owner or operator caused the problem through improper maintenance or use.

You must follow the instructions for fuel requirements in the fueling section of this manual. Even if gasoline containing greater than ten volume percent ethanol is readily available, the US EPA issued a prohibition against the use of gasoline containing greater than 10 vol% ethanol that applies to this vehicle. The use of gasoline containing greater than 10 vol% ethanol with this engine may harm the emission control system.

Disregard the information pertaining to the following systems if the watercraft is not equipped with these features:

– iBR (intelligent Brake and Reverse)
– iS (intelligent Suspension) (GTX LTD iS only)
– aS (adjustable Suspension) (RXT-X aS only)

Carry out all maintenance as listed in the schedule whenever the hours or time is reached.

NOTE: As an example, at 200 hours or 2 years, complete all items in this table and ALSO all items in the EVERY 100 hours or 1 year table.

⚠ WARNING

Failure to properly maintain the watercraft according to the maintenance schedule and procedures can make it unsafe to operate.

The maintenance schedule does not exempt the pre-ride inspection.

FIRST 50 HOURS OR 1 YEAR
Replace engine oil and filter
Inspect the exhaust system (daily flushing in salt water or dirty water use)
Inspect fuel cap, filler neck, fuel tank, fuel tank straps, fuel lines and connections
Test the fuel system for leaks
Inspect the throttle body
Check for fault codes
Inspect spark plugs
Inspect electrical connections and fastening (ignition system, starting system, fuel injectors, fuse boxes etc.)
Test the engine cut-off switch and the monitoring beeper
Verify the steering cable and connections
Verify steering nozzle bushings
Verify O.T.A.S. operation
Inspect carbon ring and drive shaft rubber boot (more frequently when using PWC in foul or dirt water)
Inspect impeller, impeller boot and wear ring condition
Verify iBR gate backlash
Inspect iBR protective guard
The following must be performed each month:
Inspect battery condition
Verify battery connections
Inspect sacrificial anode (more often in salt water use) and change when necessary

EVERY 100 HOURS OR 1 YEAR
Replace engine oil and filter
Inspect engine rubber mounts
Spray an anticorrosion lubricant to metallic components in engine compartment (every 10 hours in salt water use)
Inspect and flush the exhaust system
Inspect the cooling system (coolant level, hoses and fasteners for leaks)
Lubricate and verify the iTC lever for proper operation (Depress and release the lever to check for freedom of movement. If any friction is felt, the lever must be taken apart, cleaned, inspected for wear and lubricated)
Inspect fuel cap, filler neck, fuel tank, fuel tank straps, fuel lines and connections (At storage period or after 100 hours of use whichever comes first)
Test the fuel system for leaks
Inspect the throttle body
Inspect the air intake silencer
Check for fault codes
Inspect and lubricate ignition coils (1503 4-TEC engines)
Inspect ignition coils (1630 ACE HO engines)
Inspect electrical connections and fastening (ignition system, starting system, fuel injectors, fuse boxes etc.)

EVERY 100 HOURS OR 1 YEAR
Test the engine cut-off switch and the monitoring beeper
Verify the steering cable and connections
Verify steering nozzle bushings
Verify O.T.A.S. operation
Inspect carbon ring and drive shaft rubber boot (more frequently when using PWC in foul or dirt water)
Inspect impeller, impeller boot and wear ring condition
Verify the impeller shaft radial play
Inspect the jet pump housing
Verify and lubricate splines of the drive shaft and impeller
Measure impeller and impeller wear ring clearance
Lubricate and verify the iBR lever for proper operation (Depress and release the lever to check for freedom of movement. If any friction is felt, the lever must be taken apart, cleaned, inspected for wear and lubricated)
Verify iBR gate backlash
Verify iVTS trim ring, reverse support and iBR gate
Inspect iBR protective guard
Inspect iS system (leaks, pump reservoir oil level and position sensor operation)
Inspect aS system (leaks, remote reservoir (mounts, adjustment knob tightening)
Inspect hull, ride plate and water inlet grate for damages
The following must be performed every 100 hours (irrespective of the number of years):
Replace spark plugs (1630 ACE HO engines)
The following must be performed every 100 hours or at storage period (whichever comes first):
Impeller shaft seal, sleeve, O-ring and impeller cover

EVERY 200 HOURS OR 2 YEARS
Replace spark plugs (1503 4-TEC engines)
The following must be performed every 200 hours (irrespective of the number of years):
Replace the supercharger clutch (1503 4-TEC engines)
Inspect the clutch slipping torque of the supercharger (1630 ACE HO engines) - This supercharger is **MAINTENANCE FREE**. However, inspect supercharger at the same time when vehicle is used in intense conditions such as off-shore riding, continuous operation at wide open throttle, etc.

NOTICE Do not attempt to replace components of the supercharger assembly as the unit is factory- balanced to precise specifications. Failure to follow this recommendation may lead to supercharger and / or engine damage.

EVERY 300 HOURS OR 5 YEARS
Replace the coolant

STORAGE PROCEDURE

SERVICE PRODUCTS

Description	Part Number	Page
ANTICORROSION SPRAY	219 700 304	4
DOW CORNING 111	413 707 000	4
LOCTITE 767 (ANTISEIZE LUBRICANT)	293 800 070	4
XPS FUEL STABILIZER	413 408 601	1
XPS LUBE	293 600 016	1, 3–4

PROCEDURES

PROPULSION SYSTEM

Cleaning and Protecting the Propulsion System

Clean jet pump by spraying water in its inlet and outlet and then apply a coating of XPS LUBE (P/N 293 600 016) or equivalent.

Inspecting the Jet Pump

Remove impeller cover and check if jet pump is water contaminated; if so, refer to *JET PUMP* subsection for the repair procedure.

FUEL SYSTEM

Inspecting the Fuel System

Verify fuel system. Check fuel hoses for leaks. Replace damaged hoses or clamps if necessary.

Protecting the Fuel System

XPS FUEL STABILIZER (P/N 413 408 601) (or equivalent) should be added in the fuel tank to prevent fuel deterioration and fuel system gumming. Follow manufacturer's instructions for proper use.

NOTICE **Fuel stabilizer should be added prior to engine lubrication to ensure fuel system component protection against varnish deposits.**

Fill up fuel tank completely. Ensure there is no water inside fuel tank.

NOTICE **Should any water be trapped inside fuel tank, severe internal damage will occur to the fuel injection system.**

ENGINE

Replacing the Engine Oil and the Filter

Change engine oil and filter. Refer to *LUBRICATION SYSTEM* subsection.

Flushing the Exhaust System

Flush the exhaust system. Refer to *EXHAUST SYSTEM* subsection.

Draining the Intercooler

It is important to expel any trapped water that may have accumulated from condensation in the external intercooler.

NOTICE **Failure to drain the intercooler may cause severe damage to this component.**

260 Engines

Models With Suspension

1. Open the boarding platform and remove the RH storage bin.
2. Ensure there is an alignment line drawn on the intercooler outlet hose. This will ensure the hose is not twisted or kinked on reinstallation.
3. Loosen the clamp retaining the intercooler outlet hose.
4. Remove the intercooler outlet hose from the intercooler.

NOTE: This hose feeds the inlet of the throttle body.

iS Models

5. Drape a couple of shop rags over the iS module to protect it from any expelled water from the intercooler.

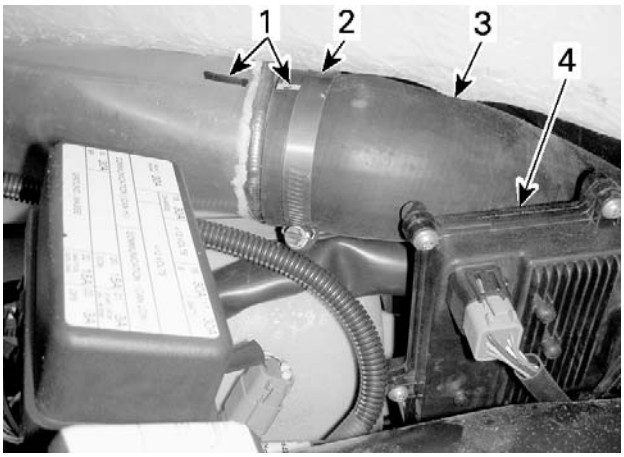

smo2009-002-151_a

TYPICAL
1. *Hose alignment lines*
2. *Hose clamp*
3. *Intercooler outlet hose*
4. *iS module*

All Models

6. Start engine and rev up to 4000 RPM several times. Water will be expelled from the intercooler.

NOTE: Prevent air intake system from aspirating foreign objects which may cause severe engine or damage.

7. Stop engine.
8. Properly align and reinstall hose on intercooler.
9. Torque intercooler hose clamp as specified.

TIGHTENING TORQUE	
Intercooler hose clamp	4 N•m ± 1 N•m (35 lbf•**in** ± 9 lbf•**in**)

Models Without Suspension

1. Open the seat.
2. Ensure there is an alignment line drawn on the throttle body inlet hose. This will ensure the hose is not twisted or kinked on reinstallation.
3. Loosen the clamp retaining the hose to the throttle body.
4. Remove the hose from the throttle body and direct it away from the throttle body and other components.
5. Start engine and rev up to 4000 RPM several times. Water will be expelled from the intercooler.

NOTE: Prevent air intake system from aspirating foreign objects which may cause severe engine or damage.

6. Stop engine.
7. Properly align and reinstall hose on throttle body.
8. Torque intercooler hose clamp as specified.

TIGHTENING TORQUE	
Intercooler hose clamp	4 N•m ± 1 N•m (35 lbf•**in** ± 9 lbf•**in**)

300 Engines

1. Ensure there is an alignment line drawn on the intercooler inlet hose. This will ensure the hose is not twisted or kinked on reinstallation.

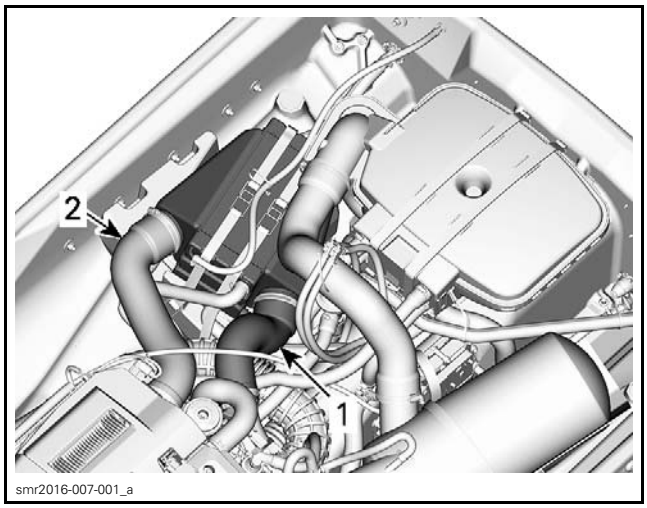

smr2016-007-001_a

1. *Air inlet hose*
2. *Air outlet hose*

2. Loosen the clamp retaining the intercooler inlet hose.
3. Remove the intercooler inlet hose from the intercooler.

NOTE: This hose feeds the hot, compressed air from the supercharger to the intercooler inlet.

The air side of the intercooler is self-draining into the inlet manifold of the intercooler. By disconnecting the air inlet hose from the intercooler, the presence of condensate water can be visually assessed and properly drained off without running the engine.

4. Reinstall the intercooler air inlet hose, ensure it is properly aligned as prior to removal to ensure proper engine operation.

TIGHTENING TORQUE	
Intercooler hose clamp	4 N•m ± 1 N•m (35 lbf•**in** ± 9 lbf•**in**)

Draining the Exhaust System

The exhaust system is self draining, but the exhaust manifold and intercooler need to be drained to avoid damages should the watercraft be stored in an area where the temperature attains the freezing point of water.

Using the flushing connector located at the rear of vehicle, inject pressurized air (at 380 kPa (55 PSI)) in the system until there is no more water flowing from jet pump.

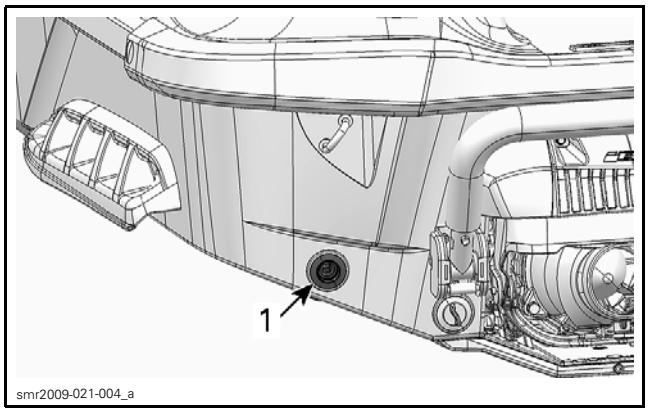

1. Flushing connector

The following hose can be fabricated to ease draining procedure.

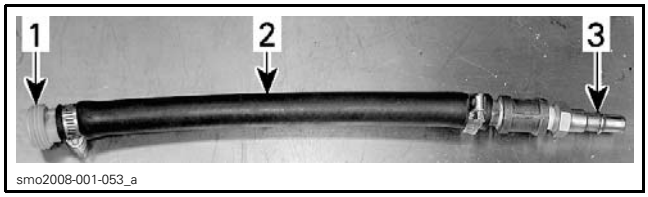

TYPICAL
1. Flushing adaptor (P/N 295 500 473)
2. Hose 13 mm (1/2 in)
3. Air hose male adapter

NOTICE **Failure to drain the exhaust manifold may cause severe damage to components.**

Replacing the Engine Coolant

Antifreeze should be replaced every 300 hours or every 5 years (whichever comes first) to prevent antifreeze deterioration.

NOTICE **Failure to replace the antifreeze as recommended may allow its degradation that could result in poor engine cooling.**

If coolant is not replaced, test the coolant density using an antifreeze hydrometer.

Replace coolant if necessary. For the coolant replacement procedure, refer to *COOLING SYSTEM* subsection.

NOTICE **Improper antifreeze density may result in coolant freezing should the vehicle be stored in area where the freezing point is attained. This could seriously damage the engine.**

Lubricating the Internal Parts of the Engine

Engine must be lubricated to prevent corrosion on internal parts.

Lubrication of the engine is recommended at the end of the season and before any extended storage period to provide additional corrosion protection. This will lubricate the engine intake valves, the cylinders and the exhaust valves.

To lubricate the engine, proceed as follows:

1. Open seat.

Models With Suspension

2. Remove the rear ventilation box.

All Models

3. Disconnect ignition coil connectors.
4. Clean the area around the ignition coils to avoid dirt falling into a cylinder.
5. Remove ignition coils.
6. Unscrew spark plugs.
7. Using an ignition coil as a puller, remove spark plugs.

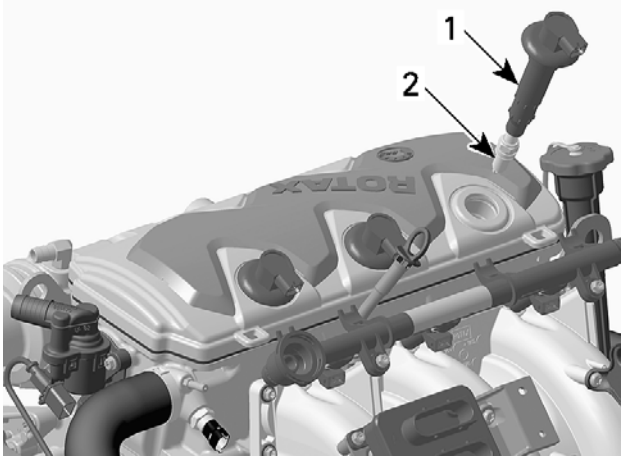

TYPICAL - 1503 4-TEC ENGINE SHOWN
1. Ignition coil
2. Spark plug

8. Spray XPS LUBE (P/N 293 600 016) into each spark plug hole.
9. Crank the engine a few turns to distribute the oil on cylinder wall.

NOTE: To crank engine, use the drowned mode to avoid injecting fuel. Fully depress throttle lever and hold for cranking engine.

10. Apply a small amount of LOCTITE 767 (ANTI-SEIZE LUBRICANT) (P/N 293 800 070) on spark plug threads then reinstall them.

NOTE: Refer to *IGNITION SYSTEM* subsection for details on installing the spark plugs and ignition coils.

11. On 155/215/260 engines, prior to inserting the ignition coil onto its spark plug, apply some DOW CORNING 111 (P/N 413 707 000) around the seal area that touches the spark plug hole.
12. Reinstall ignition coils.
13. On 155/215/260 engines, ensure the seal seats properly with the engine top surface.
14. Reconnect ignition coil connectors.
15. Install all other removed parts.

ELECTRICAL SYSTEM

Removing the Battery

For battery removal, cleaning and storage, refer to *CHARGING SYSTEM* subsection.

ENGINE COMPARTMENT

Cleaning the Engine Compartment

1. Clean the bilge with hot water and a mild detergent, or using bilge cleaner.
2. Rinse thoroughly.
3. Lift front end of watercraft to completely drain bilge. Refer to appropriate *HULL* subsection for bilge drain plug removal.

Applying an Anticorrosion Treatment

Wipe off any residual water in the engine compartment.

Spray XPS LUBE (P/N 293 600 016) or ANTICORROSION SPRAY (P/N 219 700 304) or an equivalent product over all metallic components only in engine compartment while minimizing overspray..

NOTE: The seat should be left partially open during storage. This will prevent engine compartment condensation and possible corrosion.

BODY AND HULL

Cleaning the Body and the Hull

Wash the body with a soap and water solution (only use a mild detergent). Rinse thoroughly with fresh water. Remove marine organisms from the hull.

NOTICE **Never clean body parts or hull with strong detergent, degreasing agent, paint thinner, acetone, etc.**

Replace damaged labels/decals.

Repairing the Body

If any repair is required, refer to appropriate *BODY* subsection.

Repairing the Hull

If any repair is required, refer to appropriate *HULL* subsection.

Protecting the Body and the Hull

Apply a good quality marine wax on body and hull.

If the watercraft is to be stored outside, cover it with an opaque tarpaulin to prevent sun rays and grime from affecting the plastic components, watercraft finish as well as preventing dust accumulation.

NOTICE **The watercraft should never be left in water for storage, stored in direct sunlight or stored in a plastic bag.**

PRESEASON PREPARATION

Proper vehicle preparation is necessary after the winter months or when a watercraft has not been used during 4 months.

Any worn, broken or damaged parts found must be replaced.

Using the *MAINTENANCE SCHEDULE*, perform the items titled *EVERY 100 HOURS OR 1 YEAR*.

EVERY 100 HOURS OR 1 YEAR
Replace engine oil and filter
Inspect engine rubber mounts
Spray an anticorrosion lubricant to metallic components in engine compartment (every 10 hours in salt water use)
Inspect and flush the exhaust system
Inspect the cooling system (coolant level, hoses and fasteners for leaks)
Lubricate and verify the iTC lever for proper operation (Depress and release the lever to check for freedom of movement. If any friction is felt, the lever must be taken apart, cleaned, inspected for wear and lubricated)
Inspect fuel cap, filler neck, fuel tank, fuel tank straps, fuel lines and connections (At storage period or after 100 hours of use whichever comes first)
Test the fuel system for leaks

smr2016-008-001

Furthermore, proceed with the following:

Watercraft Prepared as per Storage Procedure

- Ensure battery is fully charged.
- Reinstall the battery.
- Test ride watercraft to confirm proper operation.

Watercraft Not Prepared as per Storage Procedure

- Ensure battery is fully charged.
- Replace engine oil and filter.
- Drain fuel tank and fill with fresh fuel.
- Reinstall the battery.
- Test ride watercraft to confirm proper operation.

SPECIAL PROCEDURES

SERVICE TOOLS

Description	Part Number	Page
LARGE HOSE PINCHER	529 032 500	2
SUCTION PUMP	529 035 880	2

GENERAL

Refer to the following special procedures according to the specific event. Procedures described may not be applicable to every watercraft model.

PROCEDURES

TOWING THE WATERCRAFT IN WATER

Special precautions should be taken when towing a Sea-Doo watercraft in water.

The maximum recommended towing speed is 24 km/h (15 MPH).

This will prevent the exhaust system from filling with water, which may lead to water being injected into and filling the engine. Without the engine running, there isn't any exhaust pressure to push the water out the exhaust outlet.

NOTICE **Failure to follow these instructions may result in damage to the engine. If you must tow a stranded watercraft in water, be sure not to exceed the maximum towing speed of 24 km/h (15 MPH).**

SUBMERGED WATERCRAFT

NOTICE **Never try to crank or start engine. Water trapped in the intake manifold would flow towards the engine and possible cause severe engine damage.**

1. Drain bilge.
2. If the watercraft was submerged in salt water, rinse the bilge and all components thoroughly with fresh water using a garden hose to stop the salt corroding effect.
3. Check for water in the intake system. If water found in the intake system, refer to *WATER-FLOODED ENGINE* in this subsection.

Lubricating the Engine

Refer to *WATER-FLOODED ENGINE* in this subsection.

Inspecting the Fuel

Check fuel tank for water contamination. If necessary, siphon and refill with fresh fuel.

WATER-FLOODED ENGINE

If the engine is flooded with water, it must be serviced within a few hours after the event. Otherwise, the engine will have to be overhauled.

NOTICE

- **Never try to crank or start the engine. Water trapped in the intake manifold would enter the combustion chamber through the intake valves and may cause damage to the engine.**
- **An engine flooded with water must be properly drained, lubricant replaced (oil change), operated (boil out procedure), then lubricant replaced again, otherwise parts will be seriously damaged.**

Draining the Exhaust System

If water is suspected to be in the exhaust system, remove the exhaust pipe and the muffler. Drain them or siphon the water out of them. Refer to *EXHAUST SYSTEM* subsection.

Draining the Intake System

1. If water is present in the air intake silencer, empty it. Refer to *AIR INTAKE SYSTEM* subsection.
2. Remove the air intake silencer and check for water in the supercharger inlet hose. Remove hose to empty it.
3. Remove the water from blow-by valve hose.
4. If water is suspected in the intake manifold, remove the intake manifold and drain it. Then siphon the water out from the intake valve ports. Refer to *INTAKE MANIFOLD* subsection.

Servicing the Supercharger

If there is water in the oil or in the supercharger inlet hose, the supercharger should be taken apart, all the components dried, and the slip clutch needle bearings and shaft ball bearings replaced. Refer to appropriate *SUPERCHARGER* subsection.

1630 ACE HO Engines

Inspect the supercharger.

NOTICE **Do not attempt to replace components of the supercharger assembly as the unit is factory balanced to precide specifications, Failure to follow this recommendation may lead to supercharger and/or engine damage.**

Replacing the Engine Oil and the Filter

If the engine oil is contaminated with water (oil will be milky), change the engine oil and filter as per following procedure.

Models with Suspension

Remove the deck extension. Refer to *BODY (GTX, RXT AND WAKE PRO SERIES)* subsection.

All Models

1. Using the SUCTION PUMP (P/N 529 035 880), siphon the contaminated oil from the engine reservoir through the dipstick hole.

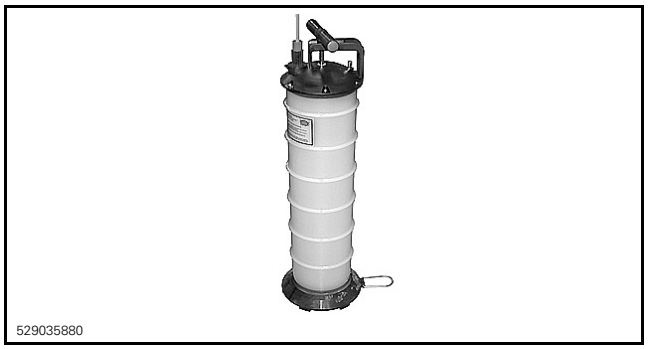

NOTICE **Never crank or start engine when siphon tube is in dipstick hole. Never start engine when there is no oil in engine.**

2. Remove the suction pump tube from the dipstick hole.
3. Fully depress throttle lever and HOLD it for cranking.
4. Crank the engine for 5 seconds.
5. Remove the oil filter cap and the oil filter. Refer to appropriate *LUBRICATION SYSTEM* subsection.
6. Again, siphon the contaminated oil from the oil filter reservoir.
7. Remove valve cover. Refer to appropriate *CYLINDER HEAD* subsection.
8. Wrap a piece of tape around the suction pump tube 400 mm (16 in) from the end of the tube.
9. Insert the tube in the PTO area until the tape is even with the cylinder-block edge.
10. Siphon contaminated oil out.

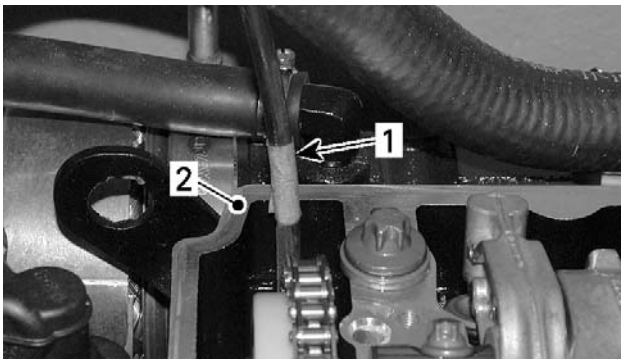

TYPICAL
1. Suction pump tube with tape
2. Edge of cylinder-block

11. Remove the suction pump tube.
12. Reinstall valve cover.
13. Install a **NEW** oil filter and reinstall the oil filter cap.
14. Replenish the engine with appropriate amount of the recommended engine oil. Refer to appropriate *LUBRICATION SYSTEM* subsection.
15. Proceed with the *BOIL OUT PROCEDURE* that follows.

NOTE: The boil out procedure is intended to evaporate a small quantity of water contained in the oil system.

Boil Out Procedure in a Test Tank or Tied to a Trailer with Watercraft in Water

1. Connect the vehicle to latest applicable B.U.D.S. version to monitor the coolant temperature. Coolant temperature must exceed 100°C (212°F) in order for the water to boil out. Once the boiling point is attained, the water will evaporate quickly.
2. Run the engine for 5 minutes at 3500 RPM.

⚠ WARNING

Be sure to safely secure the watercraft.

3. With the engine still running at 3500 RPM, install a LARGE HOSE PINCHER (P/N 529 032 500) on the coolant line going to the oil cooler.

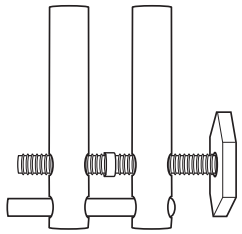

529032500

⚠ WARNING

Certain components in the engine compartment may be very hot. Direct contact may result in skin burn. Do not touch any electrical parts or jet pump area when the engine is running.

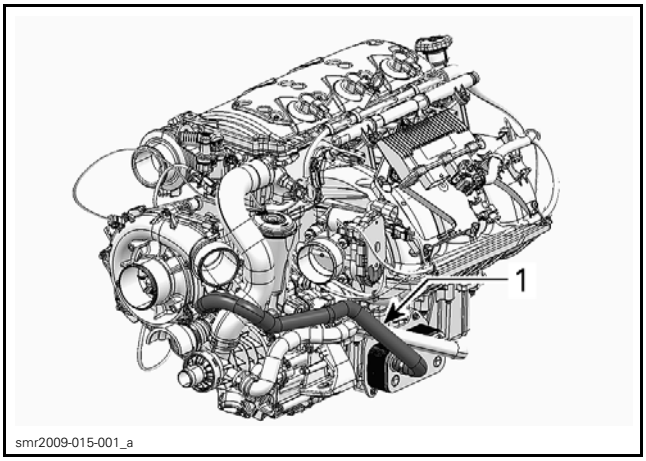

smr2009-015-001_a

TYPICAL
1. Oil cooler coolant inlet hose

4. Continue to run the engine at 3500 RPM for 15 more minutes (20 minute total run time).
5. Shut the engine off.
6. Remove the hose pincher from coolant line going to the oil cooler.

NOTICE **Hose pincher must be removed prior to operating the watercraft. Failure to do this will result in damage to the engine.**

7. Change the oil and filter again.
8. Procedure is now complete.

CAPSIZED WATERCRAFT

Capsized for More than 5 Minutes

Refer to *WATER-FLOODED ENGINE* in this subsection.

WATERCRAFT
SERVICE
Bulletin

October 29, 2010 Subject: **Storage Procedure** No. **2010-7**

YEAR	MODEL	MODEL NUMBER	SERIAL NUMBER
2010	All	All	All

NOTE: Carry out the following tasks in the same order as detailed in this bulletin.

PROCEDURES

Propulsion System

Jet Pump Cleaning

Clean jet pump by spraying water in its inlet and outlet and then apply a coating of XPS LUBE (P/N 293 600 016) or equivalent.

⚠ WARNING

Always remove safety lanyard cap from post to prevent unexpected engine starting before cleaning the jet pump area. Engine must not be running for this operation.

Jet Pump Inspection

Remove impeller cover and check if jet pump is water contaminated; if so, refer to *JET PUMP* subsection in the appropriate *SHOP MANUAL* for the repair procedure.

Drive Shaft Corrosion Protection

No protection against corrosion is required since the drive shaft is rubber-coated.

Fuel System

Fuel System Inspection

Verify fuel system. Check fuel hoses for leaks. Replace damaged hoses or clamps if necessary.

NOTICE **Salt water use may cause clamps to prematurely corrode. Therefore, they would require a closer look and a more frequent preventive replacement.**

Fuel System Protection

The BRP FUEL STABILIZER (P/N 413 408 600) or equivalent should be added in fuel tank to prevent fuel deterioration and fuel system gumming. Follow manufacturer's instructions for proper use.

NOTICE **Fuel stabilizer should be added prior to engine lubrication to ensure fuel system components protection against varnish deposits.**

Engine

Engine Oil and Filter Replacement

Change engine oil and filter. Refer to *LUBRICATION SYSTEM* subsection in the appropriate *SHOP MANUAL*.

Intercooler Draining

It is important to expel any trapped water that may have accumulated from condensation in the external intercooler.

NOTICE **Failure to drain the intercooler may cause severe damage to this components.**

All 255 Engine Models except iS Series

1. Removed the intake hose from throttle body.

Printed in Canada. (sbs2010-005 en AP)
©2010 Bombardier Recreational Products Inc. and BRP US Inc. All rights reserved.
®™ and the BRP logo are trademarks of Bombardier Recreational Products Inc. or its affiliates.

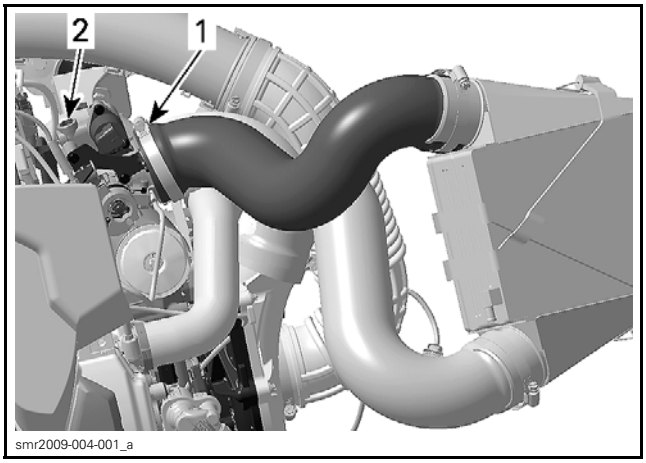

1. *Intake hose*
2. *Throttle body*

2. Start engine and rev up to 4000 RPMs several times. Water will be expelled from intercooler.

WATER EXPELLED FROM INTERCOOLER

3. Stop engine.
4. Liberally lubricate throttle body inside and out.
5. Clean off any lubrication on the throttle body intake hose flange.
6. Install air intake hose to the throttle body.

iS Series

Proceed as follows:

1. Loosen the clamp retaining the intercooler outlet hose.
2. Remove the intercooler outlet hose from the intercooler.

NOTE: This hose feeds the inlet of the throttle body.

3. Drape a couple of shop rags over the iS module to protect it from any expelled water from the intercooler.

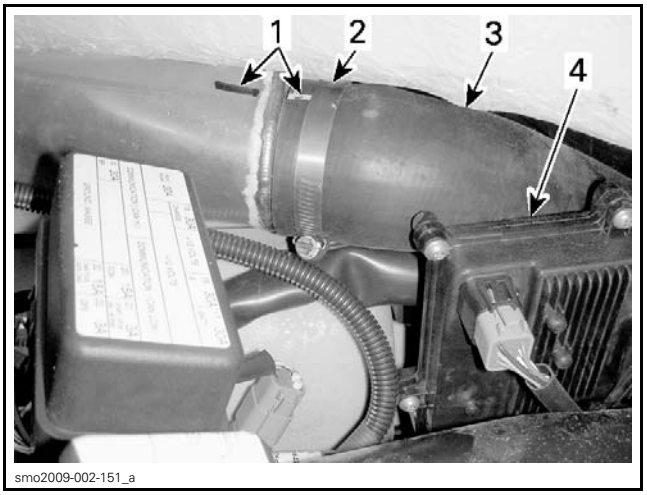

1. *Hose alignment lines*
2. *Hose clamp*
3. *Intercooler outlet hose*
4. *iS module*

4. Start engine and rev up to 4000 RPMs several times. Water will be expelled from intercooler.

NOTE: Prevent air intake system from aspirating foreign objects which may cause severe engine or damage.

5. Stop engine.
6. Install intercooler outlet hose.

Exhaust System Protection

The exhaust system is self draining, but the exhaust manifold needs to be drained to avoid damages if watercraft is stored in area where freezing weather is present.

Using the flushing connector located at the rear of vehicle, inject pressurized air into system until there is no more water flowing from jet pump.

MODEL	AIR PRESSURE
iS Series	380 kPa (55 PSI)
All other models	689 kPa (100 PSI)

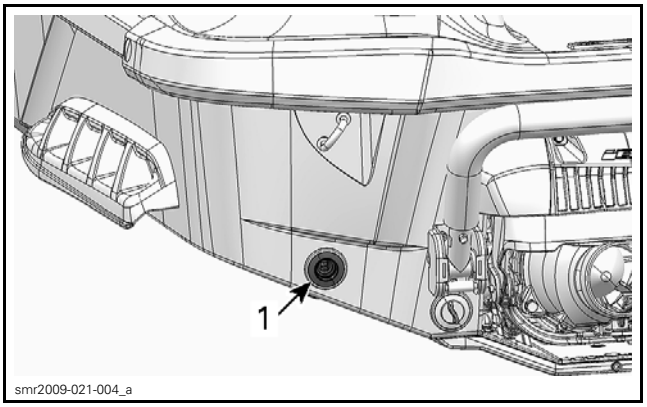

TYPICAL – IS SERIES
1. *Flushing connector*

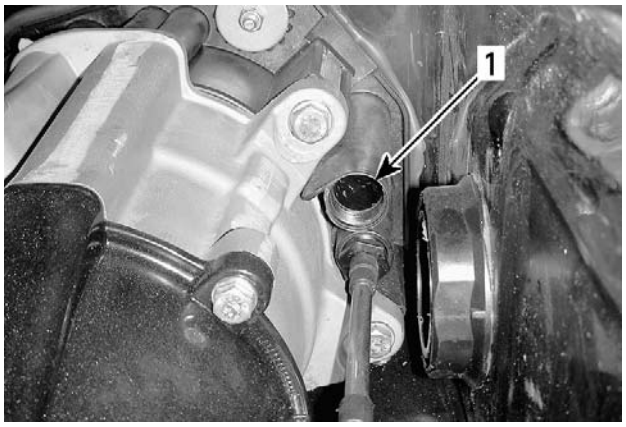

TYPICAL – ALL OTHER MODELS
1. Flushing connector — location may differ

The following hose can be fabricated to ease draining procedure.

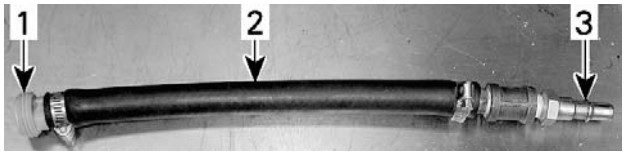

TYPICAL
1. Flushing adaptor (P/N 295 500 473)
2. Hose 13 mm (1/2 in)
3. Air hose male adapter

NOTICE **Failure to drain the exhaust manifold may cause severe damage to this components.**

Engine Coolant Replacement

Antifreeze should be replaced every 200 hours or every two years to prevent antifreeze deterioration.

NOTICE **Failure to replace the antifreeze as recommended may allow its degradation that could result in poor engine cooling.**

If coolant is not replaced, test the coolant density using an antifreeze hydrometer.

Replace coolant if necessary. For the coolant replacement procedure, refer to *COOLING SYSTEM* subsection in the appropriate *SHOP MANUAL*.

NOTICE **Improper antifreeze density might lead coolant to freeze if vehicle is stored in area where freezing point is reached. This would seriously damage the engine.**

Engine Internal Lubrication

Engine must be lubricated to prevent corrosion on internal parts.

Lubrication of the engine is recommended at the end of the season and before any extended storage period to provide additional corrosion protection. This will lubricate the engine intake valves, the cylinders and the exhaust valves.

To lubricate the engine, proceed as follows:

1. Open seat and remove the rear ventilation box.
2. On **iS series**, remove the rear ventilation box. For **all other models**, pull engine cover upward and remove it.
3. Disconnect ignition coil connectors.

⚠ WARNING

When disconnecting coil from spark plug, always disconnect coil from main harness first. Never check for engine ignition spark from an open coil and/or spark plug in the engine compartment as spark may cause fuel vapor to ignite.

NOTICE **Never cut the locking ties of ignition coil connectors. This would allow mixing the wires between cylinders.**

4. Clean ignition coil areas to avoid falling dirt into cylinder.
5. Remove ignition coils.
6. Unscrew spark plugs.
7. Using an ignition coil as a puller, remove spark plugs.

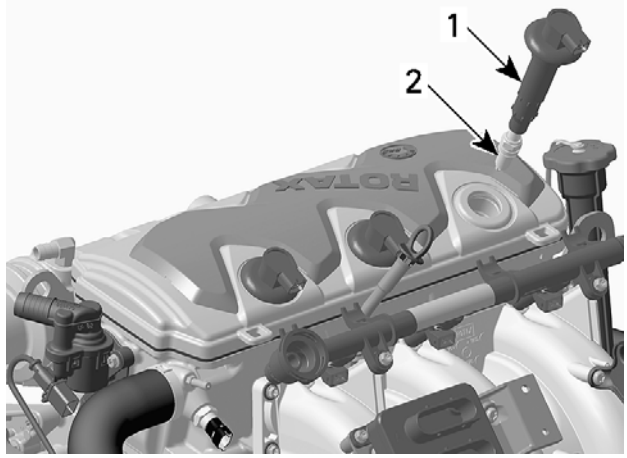

1. Ignition coil
2. Spark plug

8. Spray XPS LUBE (P/N 293 600 016) into each spark plug hole.
9. Crank the engine a few turns to distribute the oil on cylinder wall.

NOTE: To crank engine, use the drowned mode to avoid injecting fuel. Fully depress throttle lever and hold for cranking engine.

10. Apply LOCTITE 767 (ANTISEIZE LUBRICANT) (P/N 293 800 070) on spark plug threads then reinstall them.
11. Prior to inserting the ignition coil to its location, apply some DOW CORNING 111 (P/N 413 707 000) around the seal area that touches the spark plug hole.
12. Reinstall ignition coils.
13. Ensure the seal seats properly with the engine top surface.
14. Reconnect ignition coil connectors.
15. Install all other removed parts.

Electrical System

Battery Removal

For battery removal, cleaning and storage, refer to *CHARGING SYSTEM* subsection in the appropriate *SHOP MANUAL*.

Vehicle

Bilge Cleaning

Clean the bilge with hot water and mild detergent or with bilge cleaner.

Rinse thoroughly.

Lift front end of watercraft to completely drain bilge.

Body and Hull Cleaning

Wash the body with soap and water solution (only use mild detergent). Rinse thoroughly with fresh water. Remove marine organisms from the hull.

NOTICE **Never clean body parts or hull with strong detergent, degreasing agent, paint thinner, acetone, etc.**

Replace damaged labels/decals.

Body Repair

If any repair is needed, refer to *BODY* subsection in the appropriate *SHOP MANUAL*.

Anticorrosion Treatment

Wipe off any residual water in the engine compartment.

Spray XPS LUBE (P/N 293 600 016) over all metallic components in engine compartment.

Vehicle Protection

Apply a good quality marine wax on body and hull.

The seat should be left partially open during storage. This will prevent engine compartment condensation and possible corrosion.

If the watercraft is to be stored outside, cover it with an opaque tarpaulin to prevent sun rays and grime from affecting the plastic components, watercraft finish as well as preventing dust accumulation.

NOTICE **The watercraft should never be left in water for storage, stored in direct sunlight or stored in a plastic bag.**

ENGINE REMOVAL AND INSTALLATION

SERVICE TOOLS

Description	Part Number	Page
ALIGNMENT SHAFT ADAPTER	529 035 719	4–5
ALIGNMENT SHAFT SUPPORT	529 035 506	4
ALIGNMENT SHAFT	295 000 141	4–5
PUMP PLATE	529 036 224	4

SERVICE PRODUCTS

Description	Part Number	Page
LOCTITE 243 (BLUE)	293 800 060	4, 6
PULLEY FLANGE CLEANER	413 711 809	4

Midwest Manuals
Green-Manuals
Paperless Manuals
For a Better Tomorrow
If you bought this manual from any other seller please leave them NEGATIVE feedback and notify me at bestshopmanuals@gmail.com

ENGINE SUPPORTS

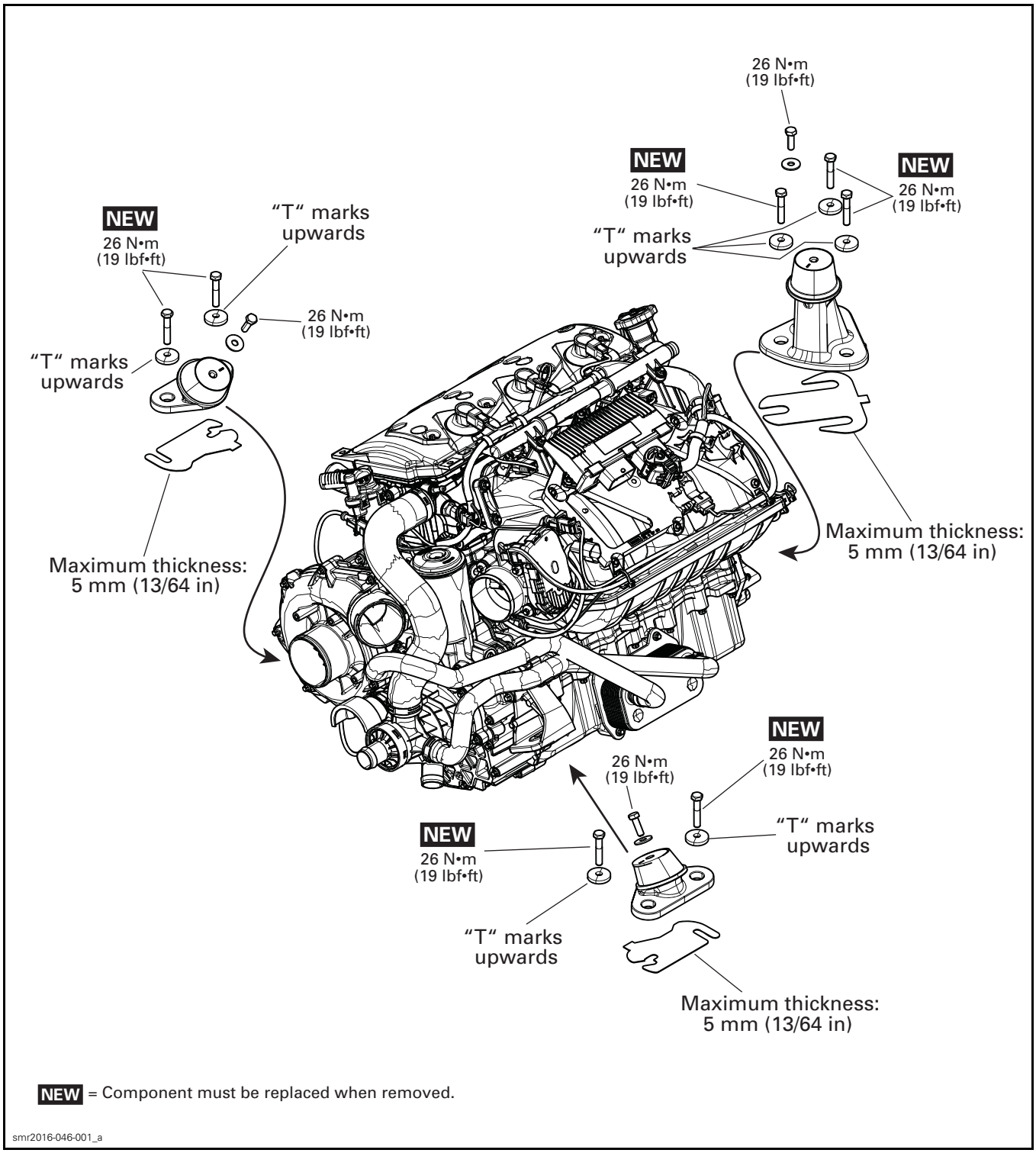

NEW = Component must be replaced when removed.

smr2016-046-001_a

PROCEDURES

ENGINE

Removing the Engine - Guideline

PROCEDURES ACCORDING TO MODEL
MODELS WITH SUSPENSION
– Remove moving deck and deck extension. Refer to *BODY (GTX, RXT AND WAKE PRO SERIES)* subsection. – Remove the air intake silencer and its support. Refer to *AIR INTAKE SILENCER (MODELS WITH SUSPENSION)* subsection).
MODELS EQUIPPED WITH A 260 ENGINE
– Unplug air intake hose from the throttle body.
MODELS EQUIPPED WITH A SUPERCHARGER
– Unplug both hoses from the supercharger.
MODELSWITHOUT SUSPENSION)
– Disconnect all fuel injector connectors and the following sensors (CTS, CPS, TOPS, CAPS and OPS). – Remove the intake manifold. Refer to *INTAKE MANIFOLD* subsection.

COMMON PROCEDURE FOR ALL MODELS

- Remove the seat. Refer to appropriate *BODY (GTX, RXT AND WAKE PRO SERIES)* subsection.
- Disconnect the battery. Refer to *CHARGING SYSTEM* subsection.
- Unplug fuel hose from fuel rail. Refer to *ELECTRONIC FUEL INJECTION (EFI)* subsection.
- Drain coolant. Refer to *COOLING SYSTEM* subsection.
- Disconnect the "B" connector from the ECM.
- Disconnect the engine connector.
- Disconnect the knock sensor and magneto connectors (remove connector housings from the ECM support).
- Disconnect the EGTS sensor from the muffler.
- Disconnect the three ground cables on the front end of engine.
- Unplug the front exhaust hose from the muffler.
- Unplug the blow-by valve hose.
- Unplug the ride plate hoses from water pump housing.
- Move muffler backward. Refer to *EXHAUST SYSTEM* subsection.
- Remove the drive shaft. Refer to *DRIVE SHAFT* subsection.
- Remove the engine mounting screws.
- Cut any locking ties from hoses or wiring harness that prevent engine removal.
- Slightly lift the engine using a suitable lifting device.

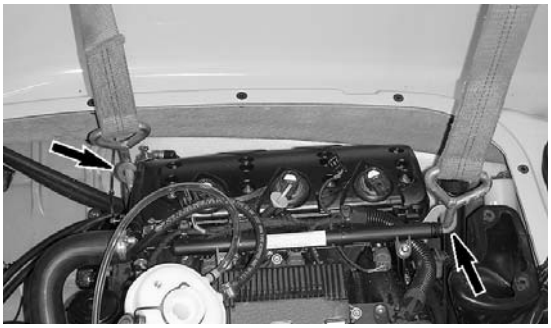

- Unplug water hoses from exhaust manifold.
- Disconnect the starter cable from the starter.
- Disconnect the engine ground cable located under the exhaust manifold.
- Carry on engine lifting to remove it from the body opening.

NOTICE Be careful not to scratch body or to hit any engine component during engine removal.

Installing the Engine

Installation of engine in watercraft is essentially the reverse of removal procedures. However pay particular attention to the following.

NOTICE **Whenever engine is removed from watercraft, engine alignment must be performed at reinstallation.**

Wipe off any spillage in bilge. Clean with the PULLEY FLANGE CLEANER (P/N 413 711 809).

Check tightness and condition of engine rubber mounts. Refer to *ENGINE MOUNTS* in this subsection.

Before completely lowering engine, install ground cable, starter cable and water hoses on exhaust manifold. Follow these guide lines.

- Ensure contact surface is perfectly clean then reconnect ground cable to engine.
- Apply LOCTITE 243 (BLUE) (P/N 293 800 060) on threads of ground cable screw or use a new screw with self-locking product.
- Install and secure the ground cable.
- Torque starter cable nut.
- Install protective cap over the starter cable end.
- Connect exhaust manifold water inlet and outlet hoses.

TIGHTENING TORQUE	
Ground cable screw	23 N•m (17 lbf•ft)
Starter cable nut	10 N•m (89 lbf•**in**)
Hose clamps	1.7 N•m (15 lbf•**in**)

Place engine into vehicle.

Install engine support screws. Do not apply threadlocker to engine support screws and do not torque yet.

Align engine. Refer to *ENGINE ALIGNMENT* in this subsection for complete procedure.

NOTICE **The engine alignment must be completed before finalizing the engine installation.**

Install and properly align exhaust pipe. Refer to *EXHAUST SYSTEM* subsection.

Reinstall all other removed parts.

Check hose condition and pressure test fuel system, refer to *FUEL SYSTEM* section.

⚠ WARNING

Whenever doing any type of repair on watercraft or if any components of the fuel system are disconnected, a pressure test must be done before starting engine.

Verify all electrical connections (ground wires and battery).

Run engine and ensure there is no leakage.

NOTICE **If watercraft is out of water, exhaust system must be cooled using the flush kit.**

Engine Alignment

REQUIRED TOOLS	
PUMP PLATE (P/N 529 036 224)	
ALIGNMENT SHAFT SUPPORT (P/N 529 035 506)	
ALIGNMENT SHAFT ADAPTER (P/N 529 035 719)	
ALIGNMENT SHAFT (P/N 295 000 141)	

To verify alignment of engine proceed as follows:

1. Remove jet pump and drive shaft. Refer to *STEERING AND PROPULSION* section.
2. Remove drive shaft boot.
3. Assemble alignment tool.
   3.1 Install the alignment shaft support on pump plate.
   3.2 Secure using M8 x 25 x 1.25 hexagonal screws.

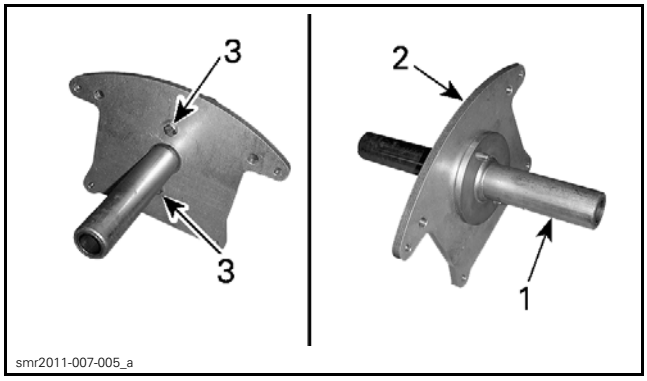

1. Alignment shaft support (P/N 529 035 506)
2. Support plate (P/N 529 036 224)
3. M8 x 25 x 1.25 hexagonal screws

TIGHTENING TORQUE	
Alignment tool screws	24 N•m (18 lbf•ft)

4. Install the alignment tool as follows.
   4.1 Position the alignment tool against the pump support.
   4.2 Push the alignment tool upward and hold it in this position.

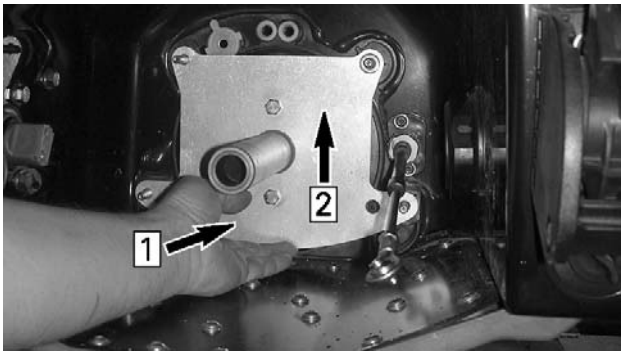

smr2011-007-006_a

Step 1: Place alignment tool against pump support
Step 2: Push alignment tool upward

TIGHTENING TORQUE	
Alignment tool nuts	24 N•m (18 lbf•ft)

Install the ALIGNMENT SHAFT ADAPTER (P/N 529 035 719) on the end of the ALIGNMENT SHAFT (P/N 295 000 141).

529035719

295000141

Trace two thin lines on alignment shaft.

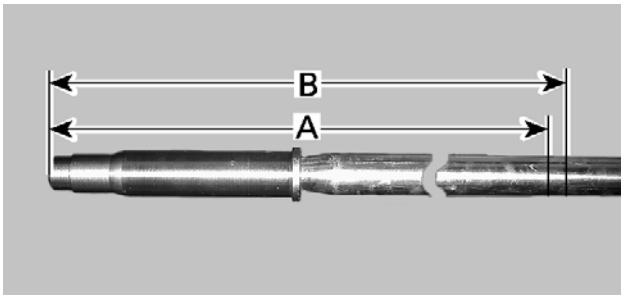

smr2009-016-200_a

LINES	DISTANCE
Line A	at 739.5 mm (29.114 in)
Line B	at 742.5 mm (29.232 in)

5. Remove the ALIGNMENT SHAFT ADAPTER (P/N 529 035 719) from the end of the alignment shaft and install it in engine PTO housing.

NOTICE **Ensure alignment shaft adapter is fully inserted into the engine PTO housing.**

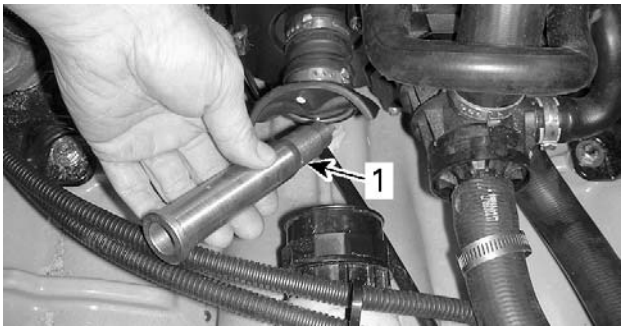

smr2009-016-029_a

TYPICAL
1. Alignment shaft adapter

6. Carefully slide the ALIGNMENT SHAFT (P/N 295 000 141) through the engine alignment tool.

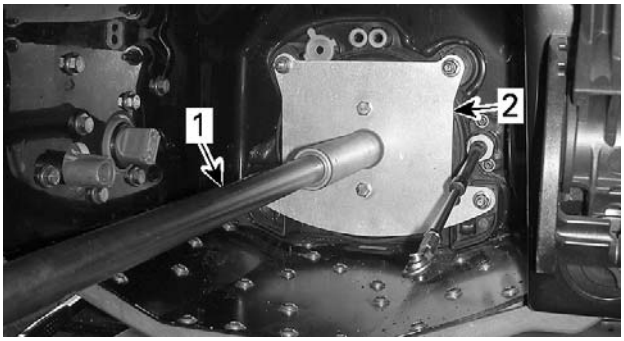

smr2011-007-007_a

1. Alignment shaft (P/N 295 000 141)
2. Alignment tool

7. Insert alignment shaft end into alignment shaft adapter. If the alignment is correct, the alignment shaft end should slide through the adapter.

NOTE: A small resistance during shaft insertion is normal.

8. If the alignment is incorrect, loosen engine mount retaining screws (Allen socket screws).
9. Add or remove shims as required.

NOTE: Shims location is between engine mount and engine mount plate.

NOTICE Whenever shims are used to correct alignment, never install more than 5 mm (13/64 in) of shims.

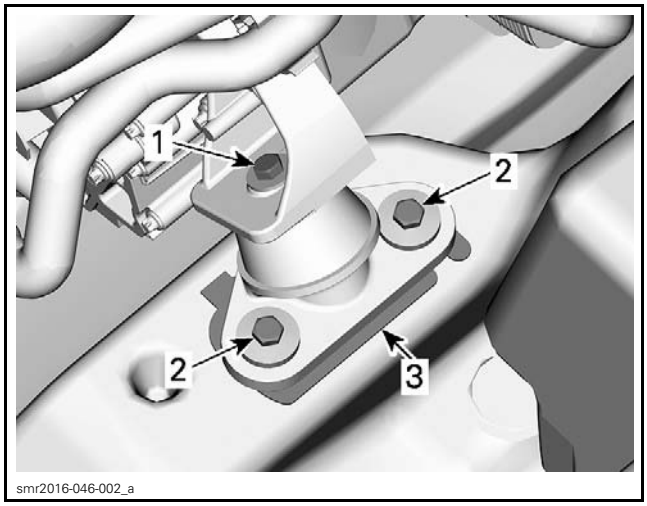

REAR STARBOARD ENGINE MOUNT SHOWN
1. *Engine mounting screw*
2. *Engine mount retaining screws*
3. *Shim(s)*

10. When engine alignment is correct, check the longitudinal position of engine.

Verifying the Engine Longitudinal Position

With alignment shaft installed, check the location of the marks (previously drawn at the beginning of the engine alignment procedure).

Engine is properly positioned longitudinally when the engine alignment tool is between both shaft marks.

– If **one** mark is visible, the engine is properly positioned.
– If **both** marks are visible, the engine must be moved forward.
– If **no** mark is visible, the engine must be moved rearward.

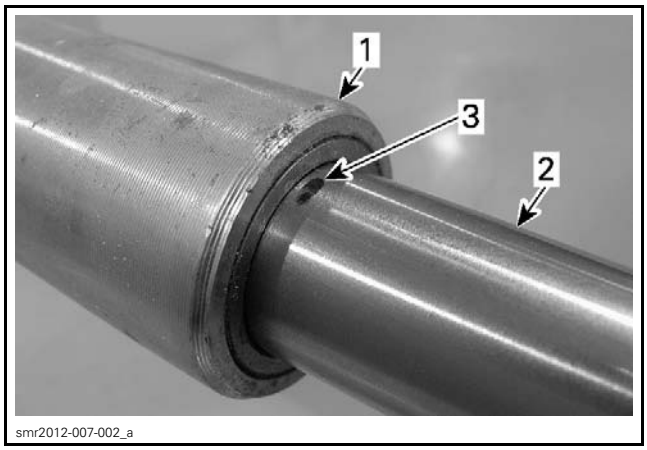

PROPER POSITION
1. *Engine alignment tool*
2. *Alignment shaft*
3. *Mark at 742.5 mm (29.232 in)*

When alignment and longitudinal position of engine are correct, tighten engine mount screws. Refer to *ENGINE MOUNTS* in this subsection.

Recheck engine alignment.

ENGINE MOUNTS

If engine mounts have been removed, apply LOCTITE 243 (BLUE) (P/N 293 800 060) on screw threads or use new screws with self-locking product.

TIGHTENING TORQUE	
Engine mount screws	26 N•m (19 lbf•ft)

NOTE: Position conical spring washer with the "T" mark upwards.

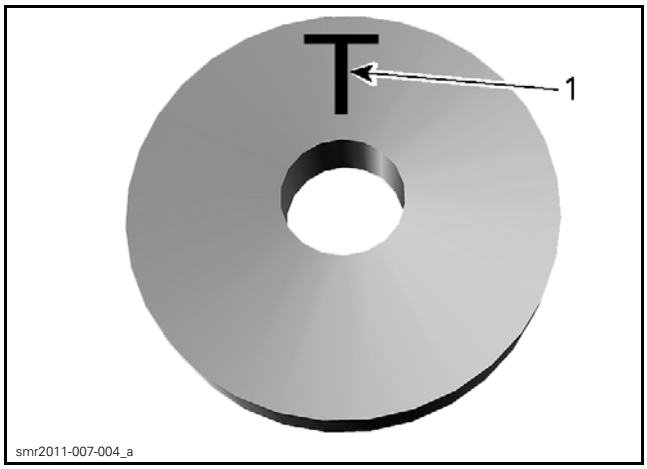

1. *T mark*

AIR INTAKE SYSTEM (MODELS WITHOUT SUSPENSION)

155 engines

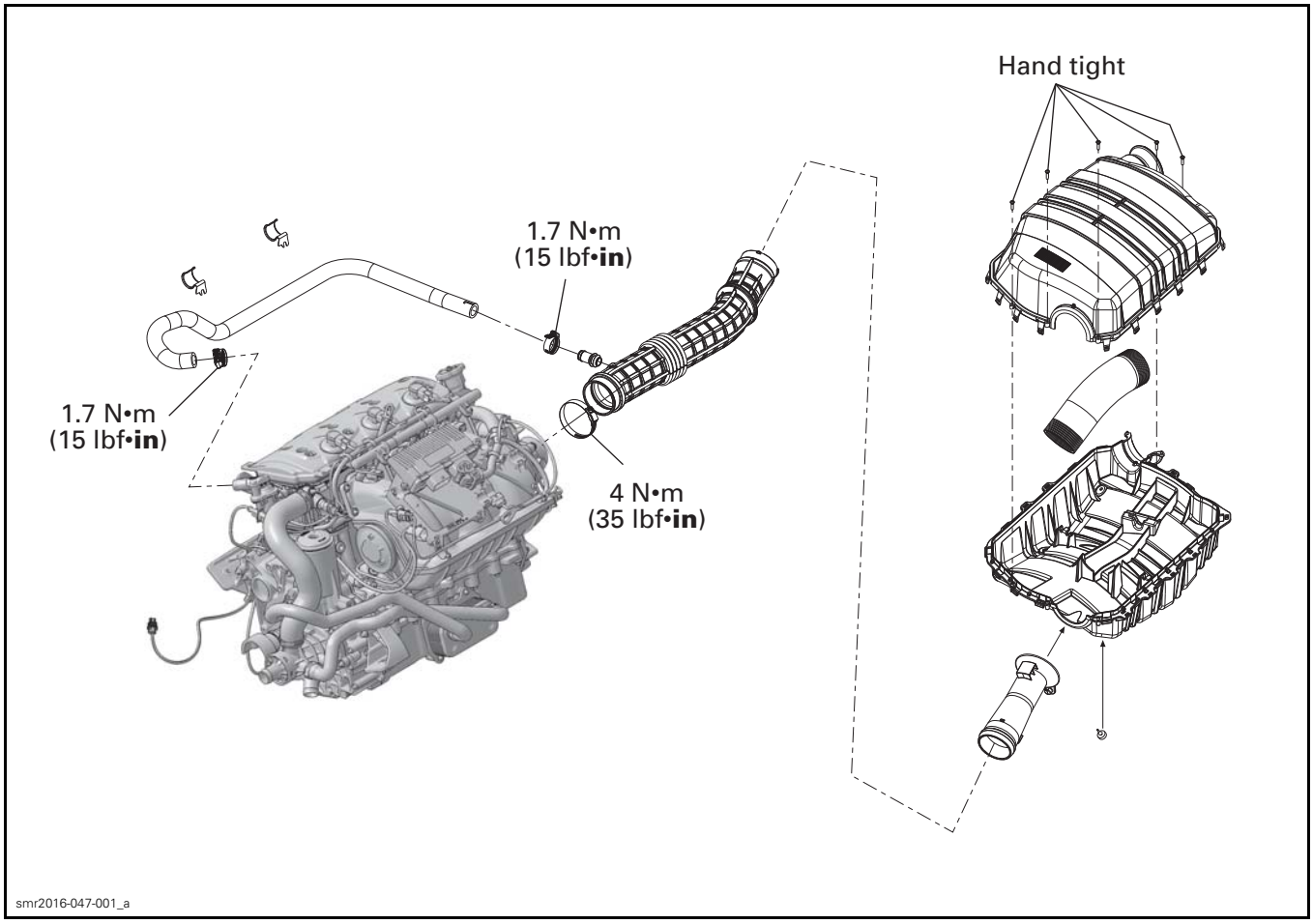

215 and 260 Engines

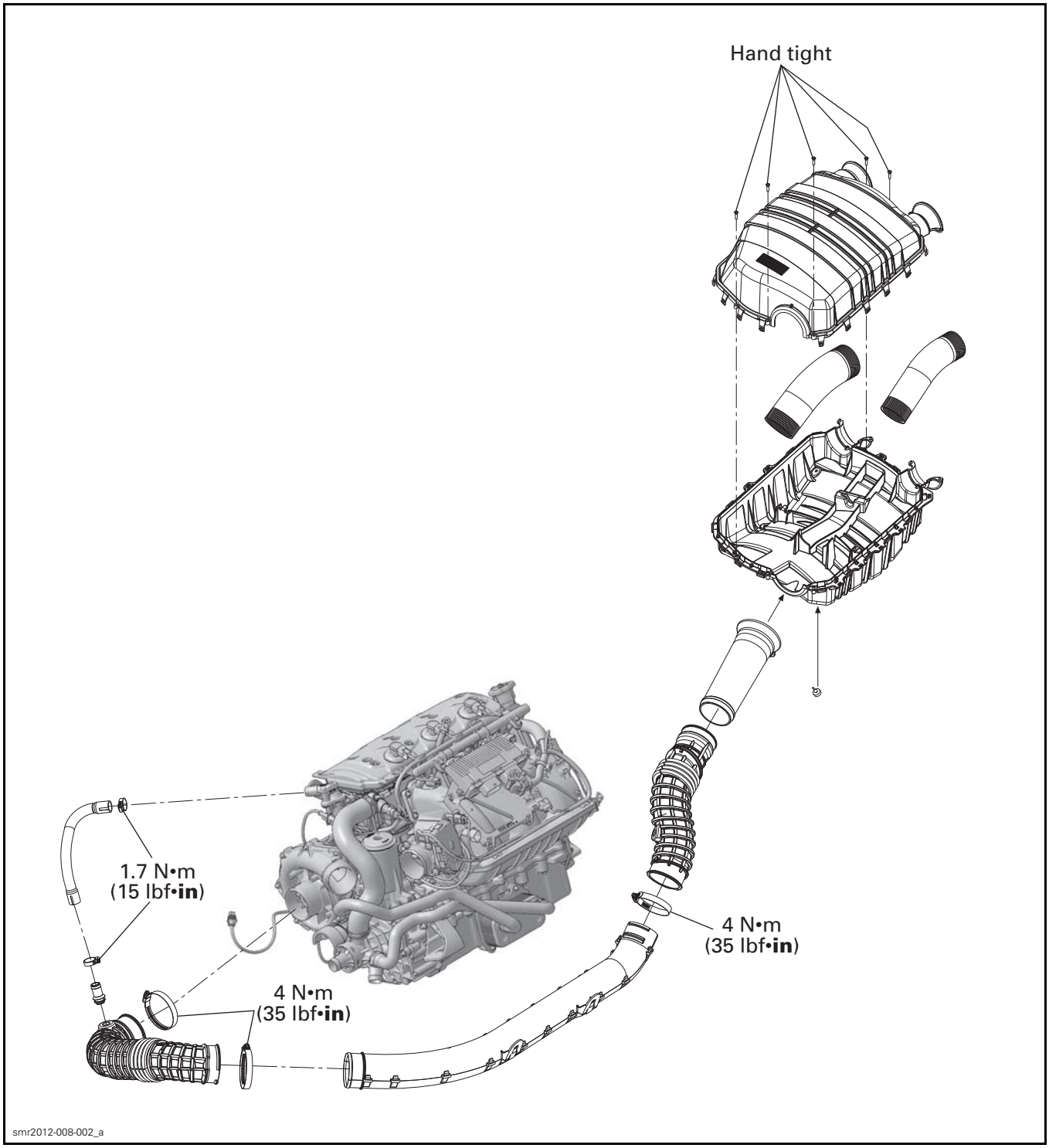

PROCEDURES

AIR INTAKE SILENCER

Air Intake Silencer Access

1. Open the front storage compartment cover.
2. Remove the storage bin.
3. Remove partition.

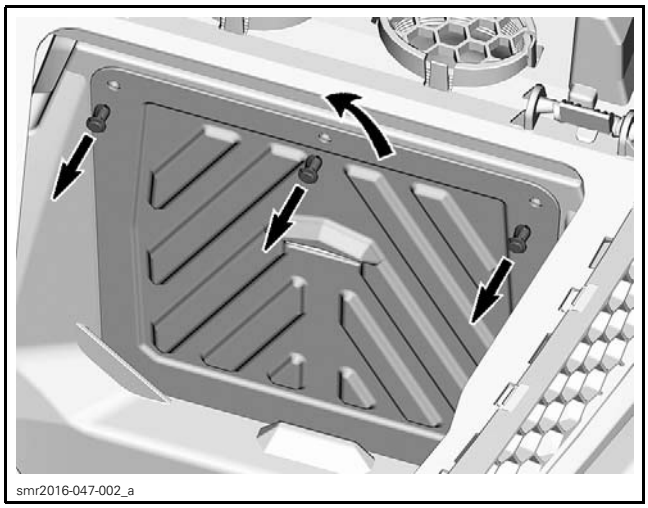
smr2016-047-002_a

STORAGE COMPARTMENT COVER REMOVED FOR CLARITY
1. *Partition*
2. *Plastic rivets*

4. Unplug the top of ventilations tubes and place them lower in hull.

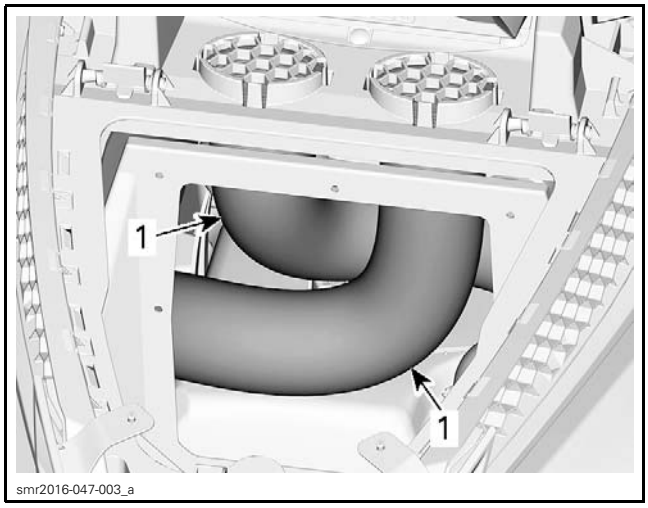

smr2016-047-003_a

1. *Ventilation tubes*

5. Cut all locking ties securing the hose and harnesses to the air intake silencer.

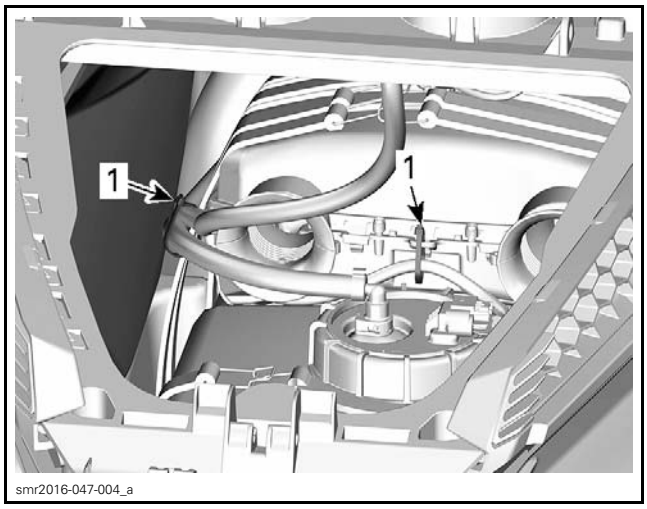

smr2016-047-004_a

1. *Locking ties*

Removing the Air Intake Silencer

1. Open or remove the seat.
2. From seat opening, cut locking tie securing the wiring harness and the fuel supply hose to air intake silencer.

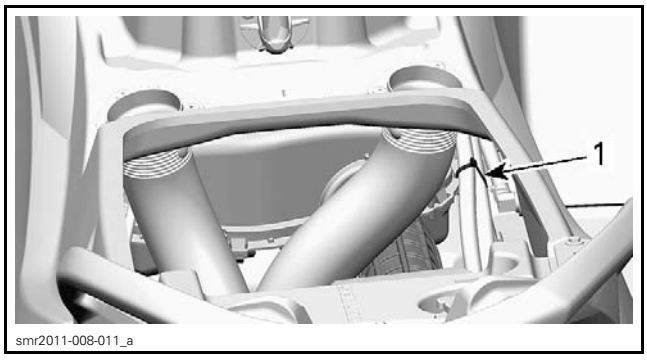

smr2011-008-011_a

1. *Cut this locking tie*

3. Detach rear retaining strap retaining air intake silencer and fuel tank.

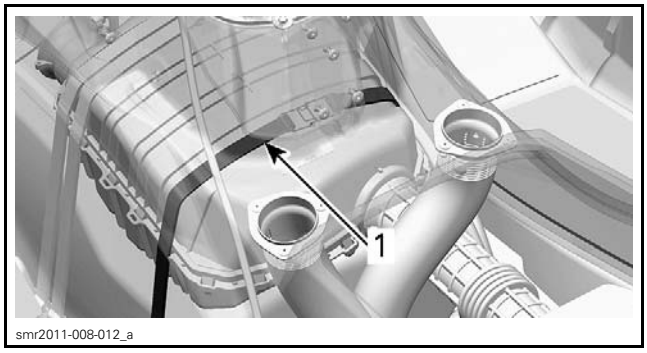

smr2011-008-012_a

1. *Rear retaining strap – under glove box*

4. Loosen clamp securing the air intake silencer outlet hose to throttle body.

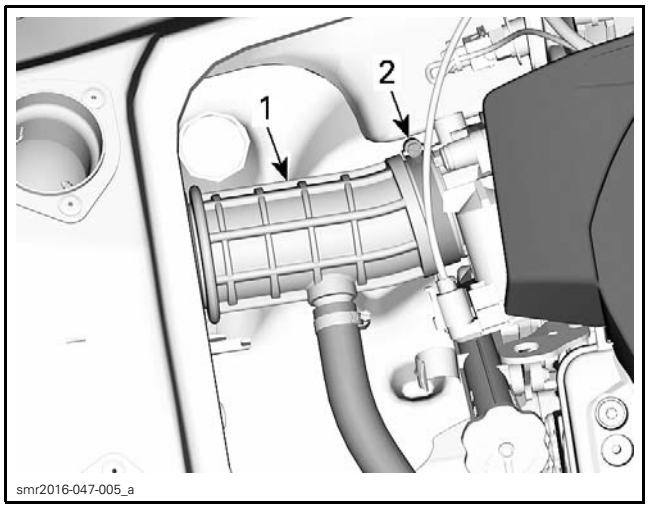

1. Air intake silencer outlet hose
2. Loosen this clamp

5. Detach the breather hose from the air intake silencer outlet hose.

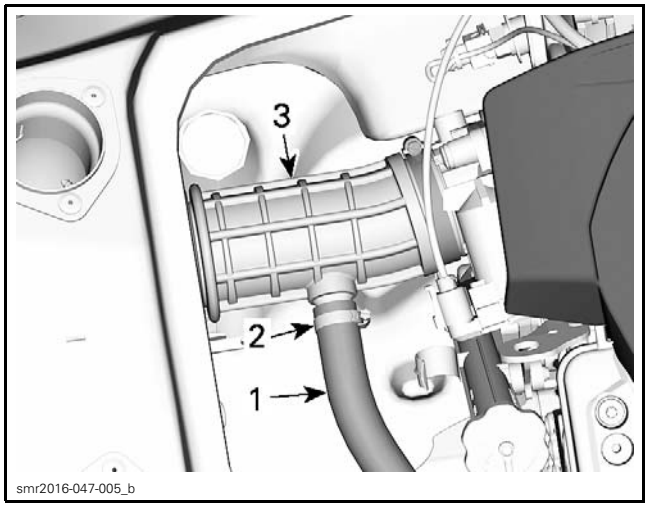

1. Breather hose
2. Breather hose clamp
3. Air intake silencer outlet hose

6. Detach the front retaining straps.

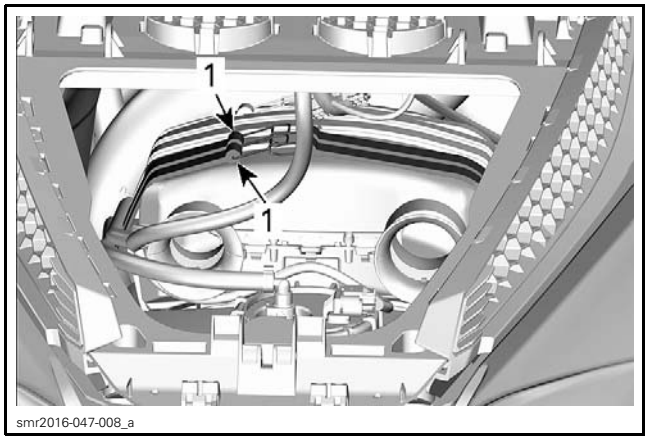

1. Front retaining straps

7. Carefully pull the air intake silencer forward to remove it from the vehicle.

Disassembling the Air Intake Silencer

1. Remove screws retaining both parts of air intake silencer together.

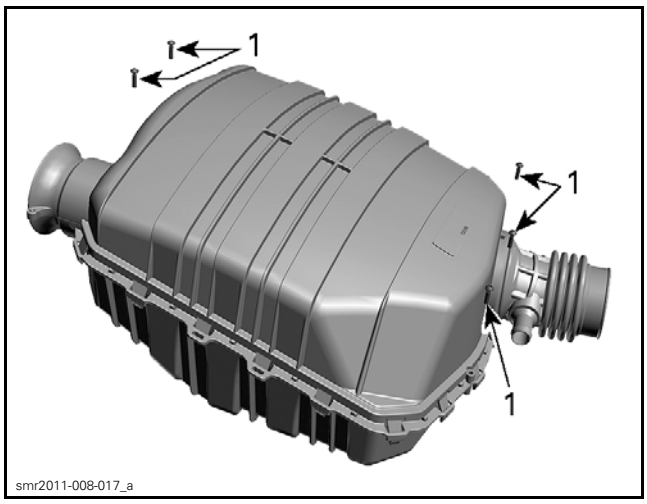

1. Retaining screws (5x)

2. Unlatch air intake silencer and remove the upper section.

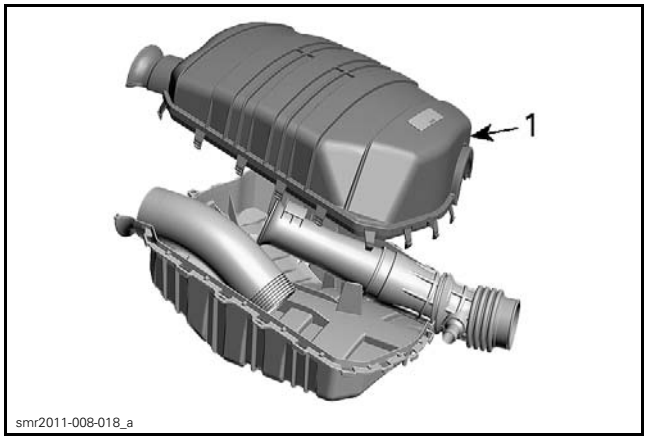

1. Remove upper section of air intake silencer

3. Remove the inlet tube (2 inlet tubes on 215 and 260 engines), the baffle and the outlet hose from the air intake silencer.

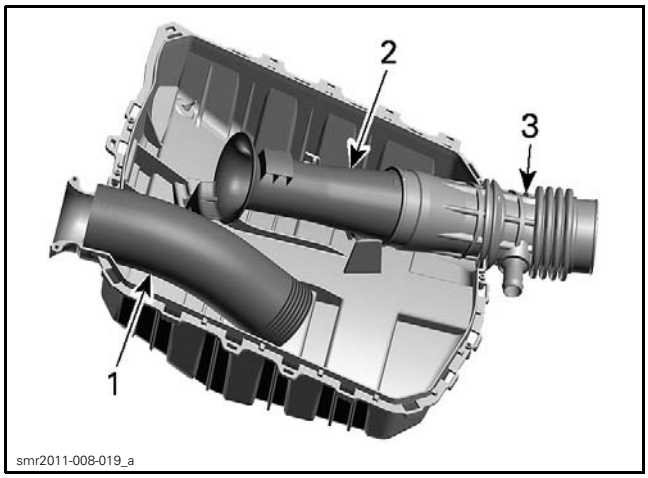

1. *Inlet tube*
2. *Baffle*
3. *Outlet hose*

Assembling the Air Intake Silencer

Install the baffle into the outlet hose. Ensure marks are aligned.

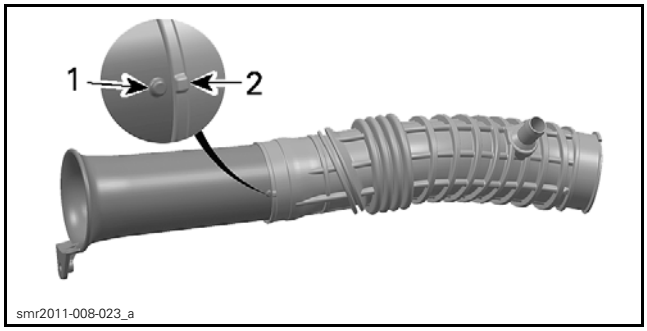

TYPICAL – GTX SHOWN
1. *Baffle mark*
2. *Outlet hose mark*

Install the assembly in the air intake silencer.

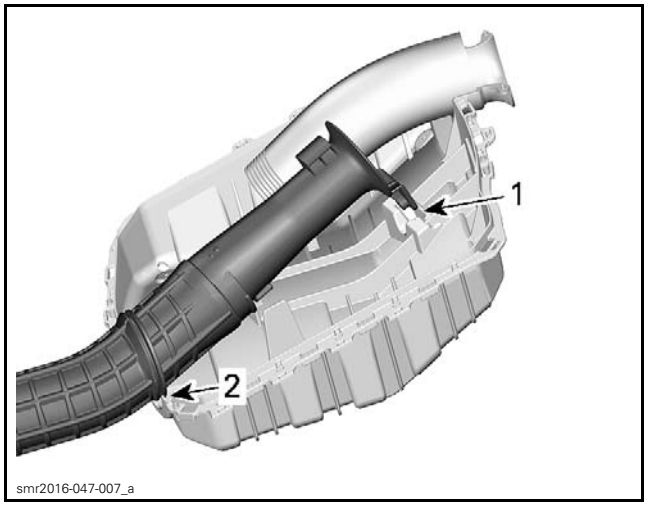

1. *Baffle tab into air intake silencer slot*
2. *Air intake silencer rib into the outlet hose groove*

Install the inlet tube. Ensure each end is properly attach.

NOTE: On **215 and 260 engines**, both inlet tubes are attached as shown.

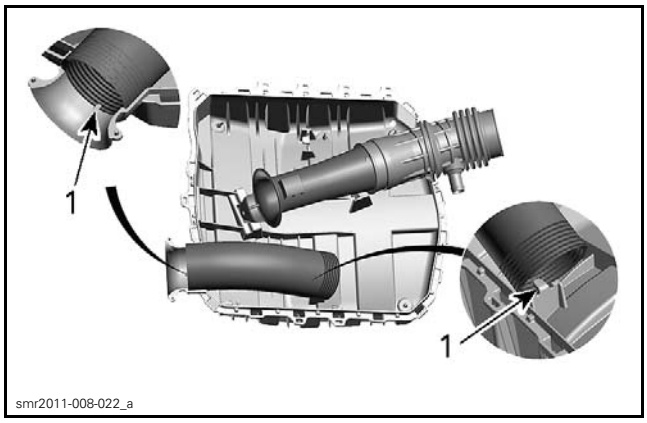

1. *Retaining tabs*

Press both halves of the air intake silencer together until all tabs are locked. Do not force, make sure all tubes are properly installed.

TIGHTENING TORQUE	
Air intake silencer screws	Hand tight

Installing the Air Intake Silencer

The installation is the reverse of the removal procedure. However, pay attention to the following.

Ensure wiring harness and fuel hoses are properly route.

Tighten all gear clamp as specified in exploded views.

AIR INTAKE TUBE

Removing the Air Intake Tube

215 and 260 Engines

1. Open seat.
2. Detach the seat bridge from the body and move it aside to make room.
3. Loosen clamps retaining the air intake tube.

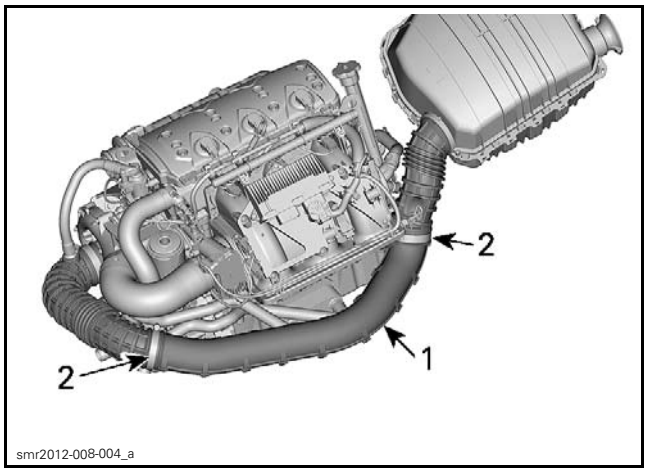

1. Air intake tube
2. Retaining clamps

4. Detach the air intake tube from both hoses.
5. Open the front compartment storage cover and remove the storage bin.
6. Slide the air intake tube over the air intake silencer and through the front compartment opening.

Installing the Air Intake Tube

The installation is the reverse of the removal procedure. However pay attention to the following.

Make sure hoses are perfectly inserted into air intake tube before tightening the clamps.

TIGHTENING TORQUE	
Retaining clamps	4 N•m (35 lbf•**in**)

AIR INTAKE SYSTEM (MODELS WITH SUSPENSION)

155 Engine

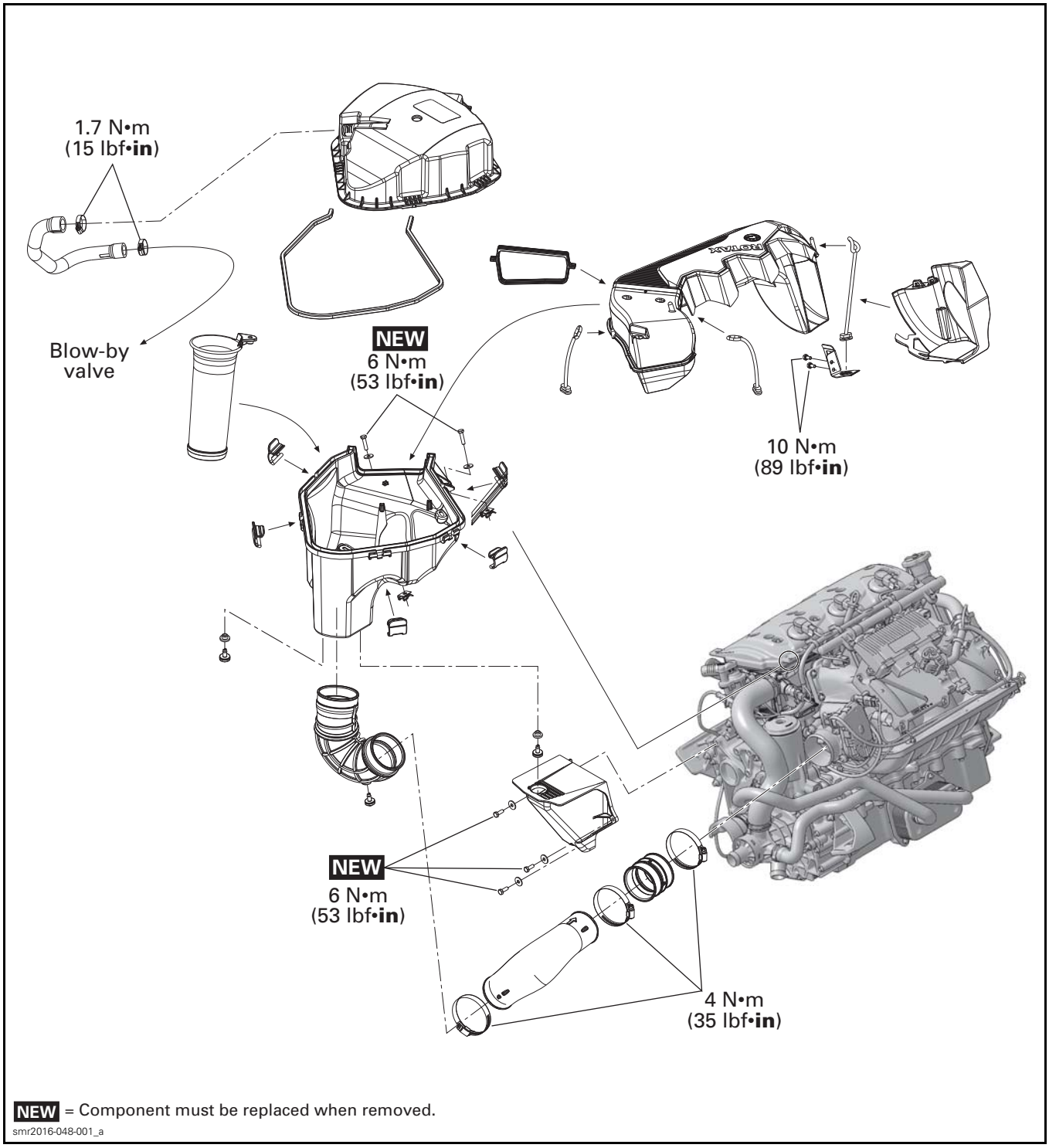

NEW = Component must be replaced when removed.

smr2016-048-001_a

260 Engine

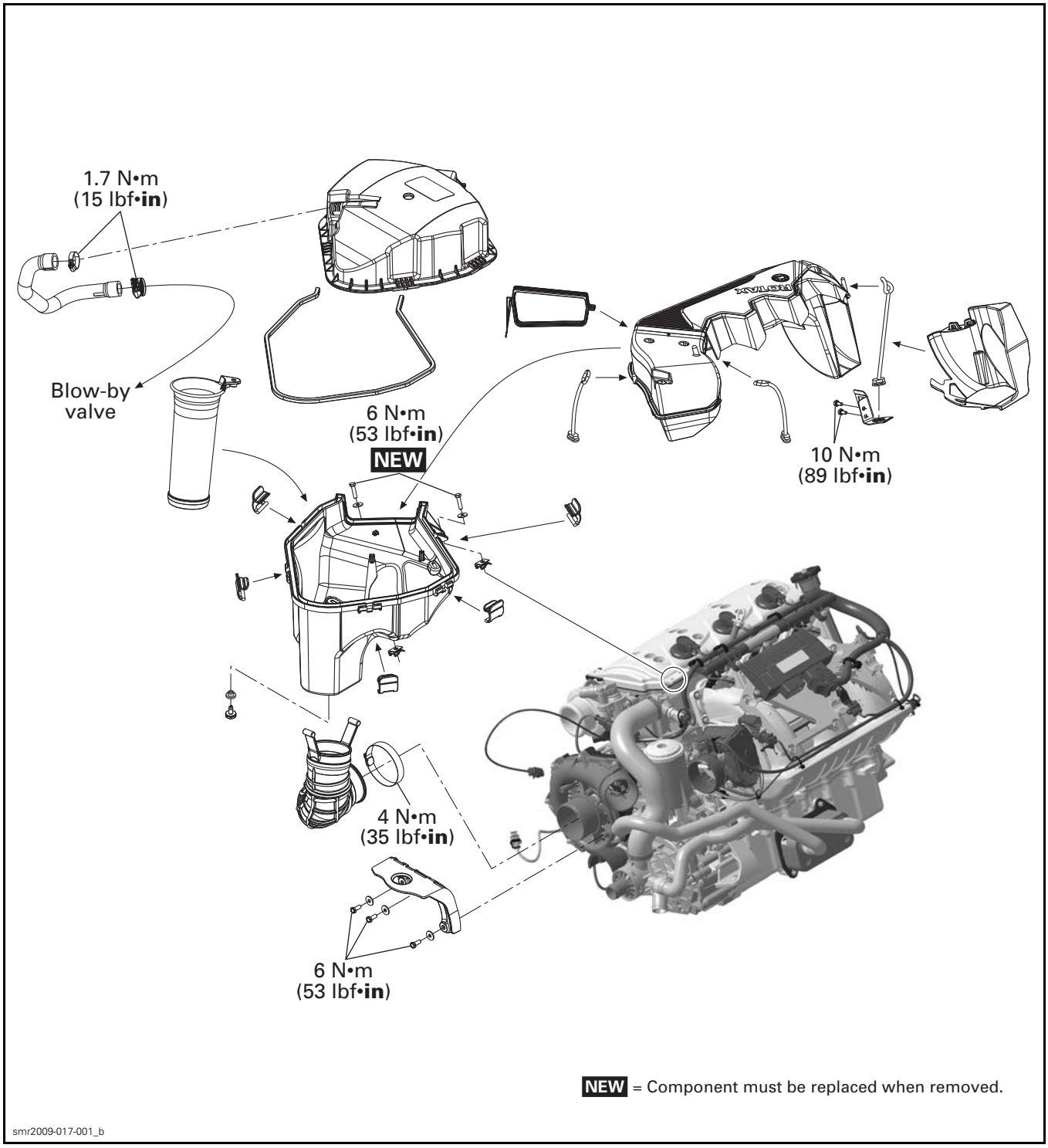
1.7 N•m
(15 lbf•in)
Blow-by
valve
6 N•m
(53 lbf•in)
NEW
10 N•m
(89 lbf•in)
4 N•m
(35 lbf•in)
6 N•m
(53 lbf•in)
NEW = Component must be replaced when removed.
smr2009-017-001_b

PROCEDURES

AIR INTAKE SILENCER COVER

Removing the Air Intake Silencer Cover

Remove the deck extension. Refer to *BODY* subsection for procedure.

Release retaining latches.

Loosen clamp securing blow-by hose to cover.

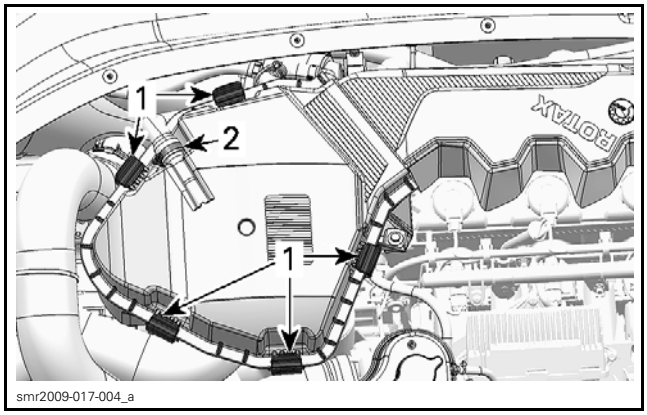

1. Retaining latches
2. Loosen this clamp

Remove the cover.

Installing the Air Intake Silencer Cover

The installation is the reverse of the removal procedure. However, pay attention to the following.

Check the condition of the seal cover. Replace seal as required.

Tighten blow-by hose clamp.

TIGHTENING TORQUE	
Blow-by hose clamp	1.7 N•m (15 lbf•**in**)

Install the deck extension. Refer to *BODY* subsection for the proper installation procedure.

AIR INTAKE SILENCER BAFFLE

Removing the Air Intake Silencer Baffle

Remove *AIR INTAKE SILENCER COVER*, see procedure in this subsection.

Pull the baffle out of the air intake silencer.

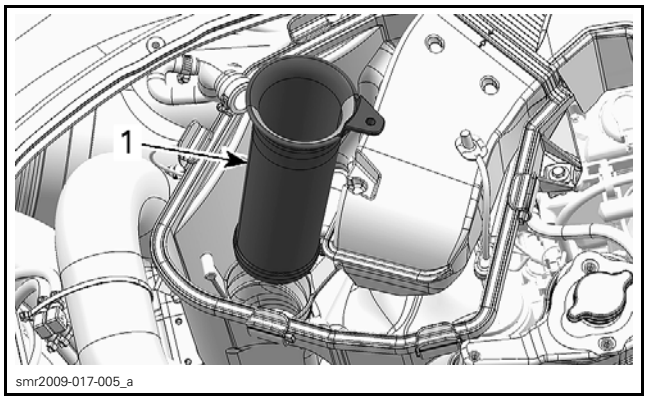

1. Air intake silencer baffle

Installing the Air Intake Silencer Baffle

Insert the end of the baffle into supercharger air inlet hose. Using hose ears to retain hose, push the baffle into supercharger air inlet hose.

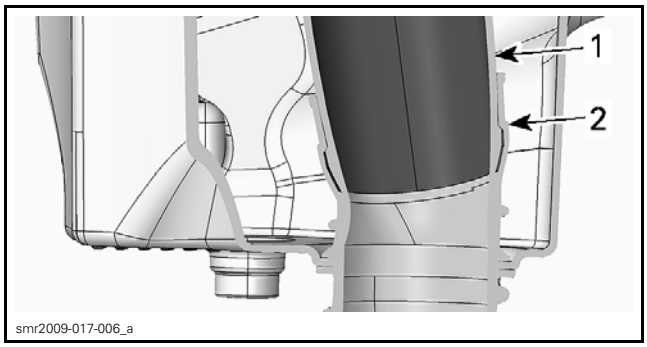

1. Baffle
2. Air intake hose

Install air intake silencer cover and all other removed parts.

AIR INTAKE TUBE

Removing the Air Intake Tube

Remove the *AIR INTAKE SILENCER COVER* and the *AIR INTAKE SILENCER BAFFLE*, see procedure in this subsection.

Release the three rubber latches securing the air intake tube.

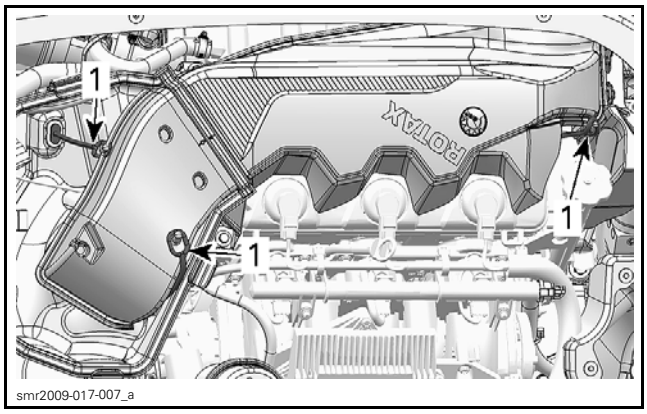

1. Rubber latches

Remove air intake tube from vehicle.

Installing the Air Intake Tube

The installation is the reverse of the removal procedure.

AIR INTAKE SILENCER

Removing the Air Intake Silencer

Remove:

- Deck extension, see *BODY* subsection for procedure
- Air intake cover
- Air intake tube.

Remove and discard both screws securing air intake silencer.

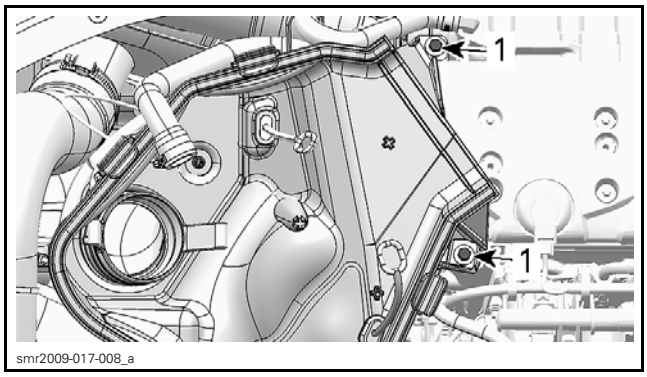

1. Air intake silencer screws

Inside air intake silencer, squeeze the top of its outlet hose and move hose out of air intake silencer.

Installing the Air Intake Silencer

Squeeze the top of the air intake silencer outlet hose and move it in the air intake silencer.

Install the air intake silencer into hose groove.

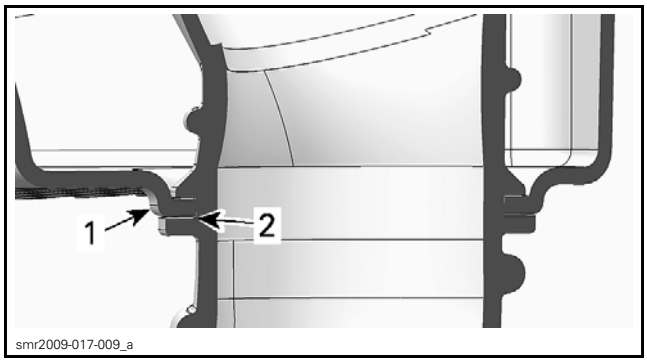

1. Air intake silencer
2. Outlet hose groove

Secure air intake silencer using NEW screws.

TIGHTENING TORQUE	
Air intake silencer screw	6 N•m (53 lbf•**in**)

Install all other removed parts.

EXHAUST SYSTEM

SERVICE TOOLS

Description	Part Number	Page
FLUSHING CONNECTOR ADAPTER	295 500 473	8

SERVICE PRODUCTS

Description	Part Number	Page
LOCTITE 243 (BLUE)	293 800 060	14

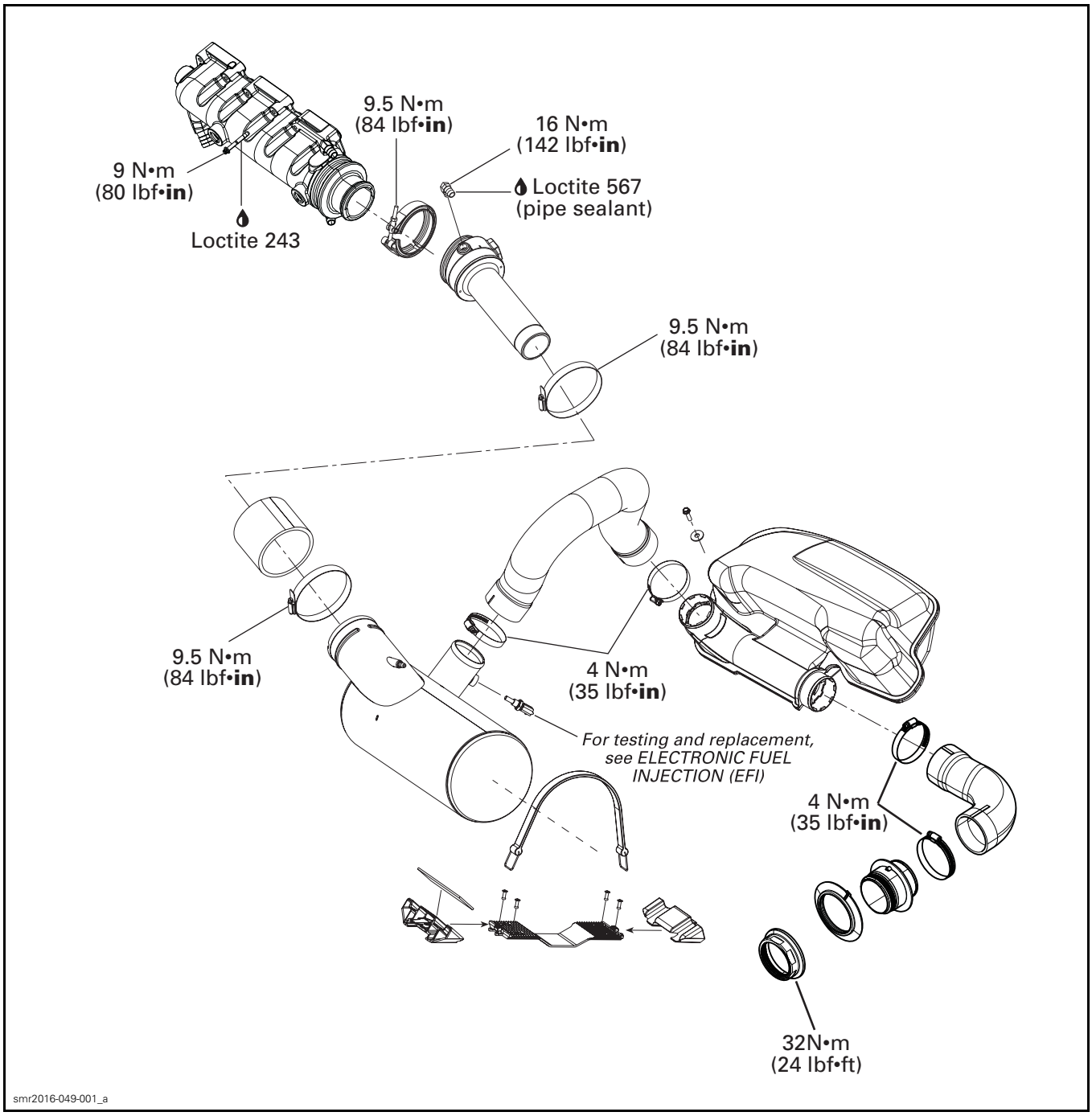
9.5 N•m
(84 lbf•in)
16 N•m
(142 lbf•in)
9 N•m
(80 lbf•in)
Loctite 567
(pipe sealant)
Loctite 243
9.5 N•m
(84 lbf•in)
9.5 N•m
(84 lbf•in)
4 N•m
(35 lbf•in)
For testing and replacement,
see ELECTRONIC FUEL
INJECTION (EFI)
4 N•m
(35 lbf•in)
32N•m
(24 lbf•ft)
smr2016-049-001_a

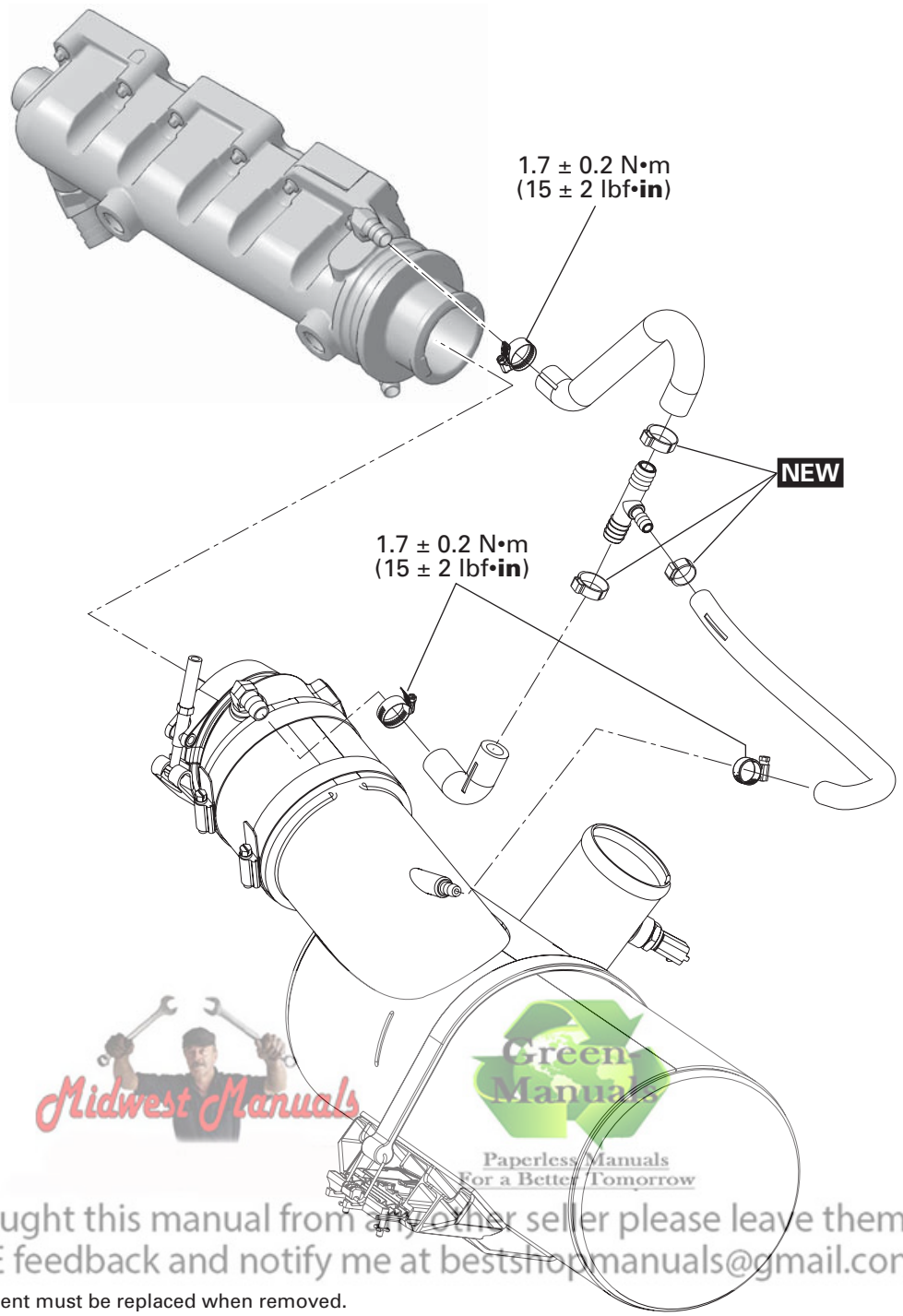

Midwest Manuals
Green Manuals
Paperless Manuals
For a Better Tomorrow
If you bought this manual from any other seller please leave them NEGATIVE feedback and notify me at bestshopmanuals@gmail.com

NEW = Component must be replaced when removed.

smr2011-013-100_a

155 Engines

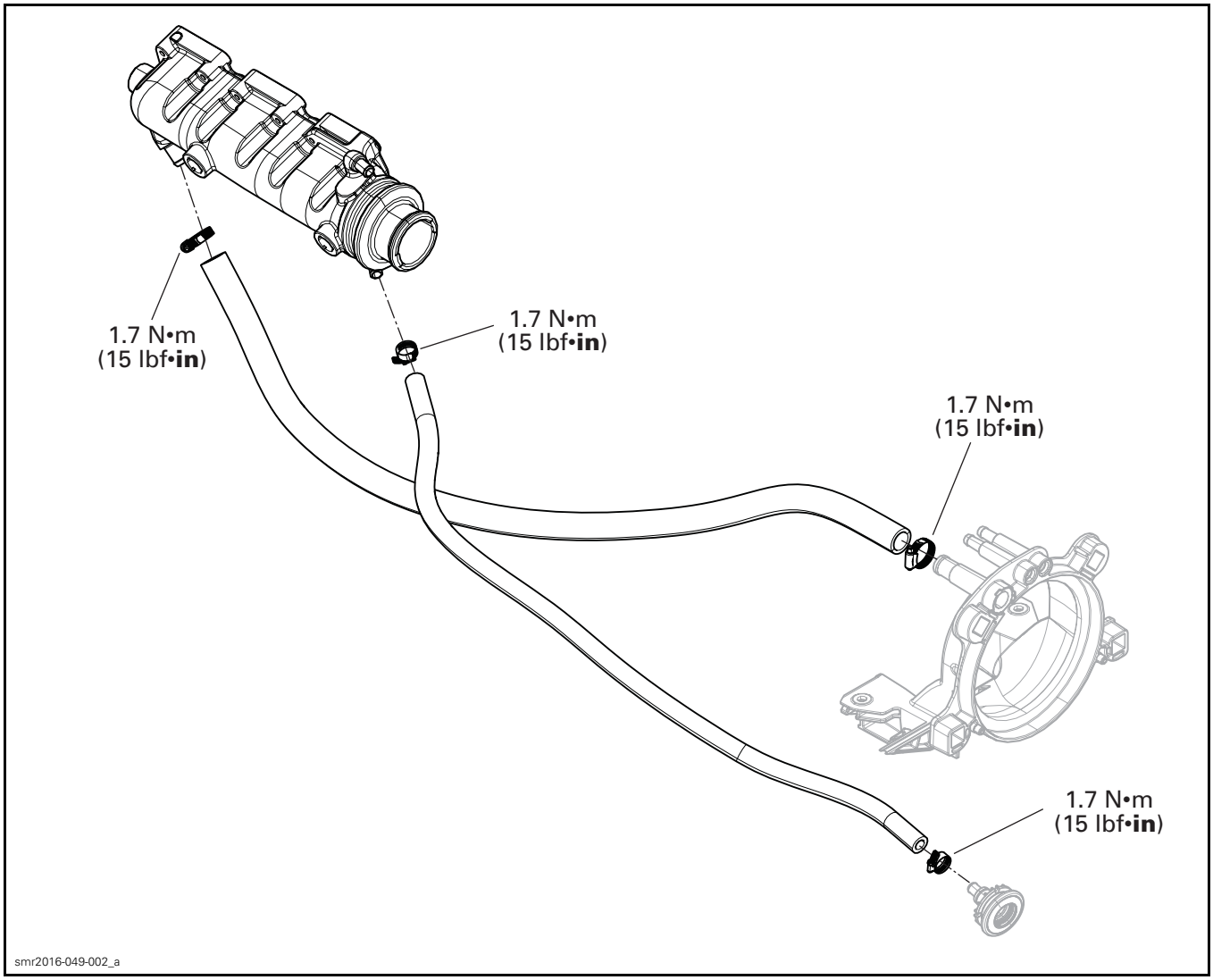
1.7 N•m
(15 lbf•in)
1.7 N•m
(15 lbf•in)
1.7 N•m
(15 lbf•in)
1.7 N•m
(15 lbf•in)
smr2016-049-002_a

215 Engines

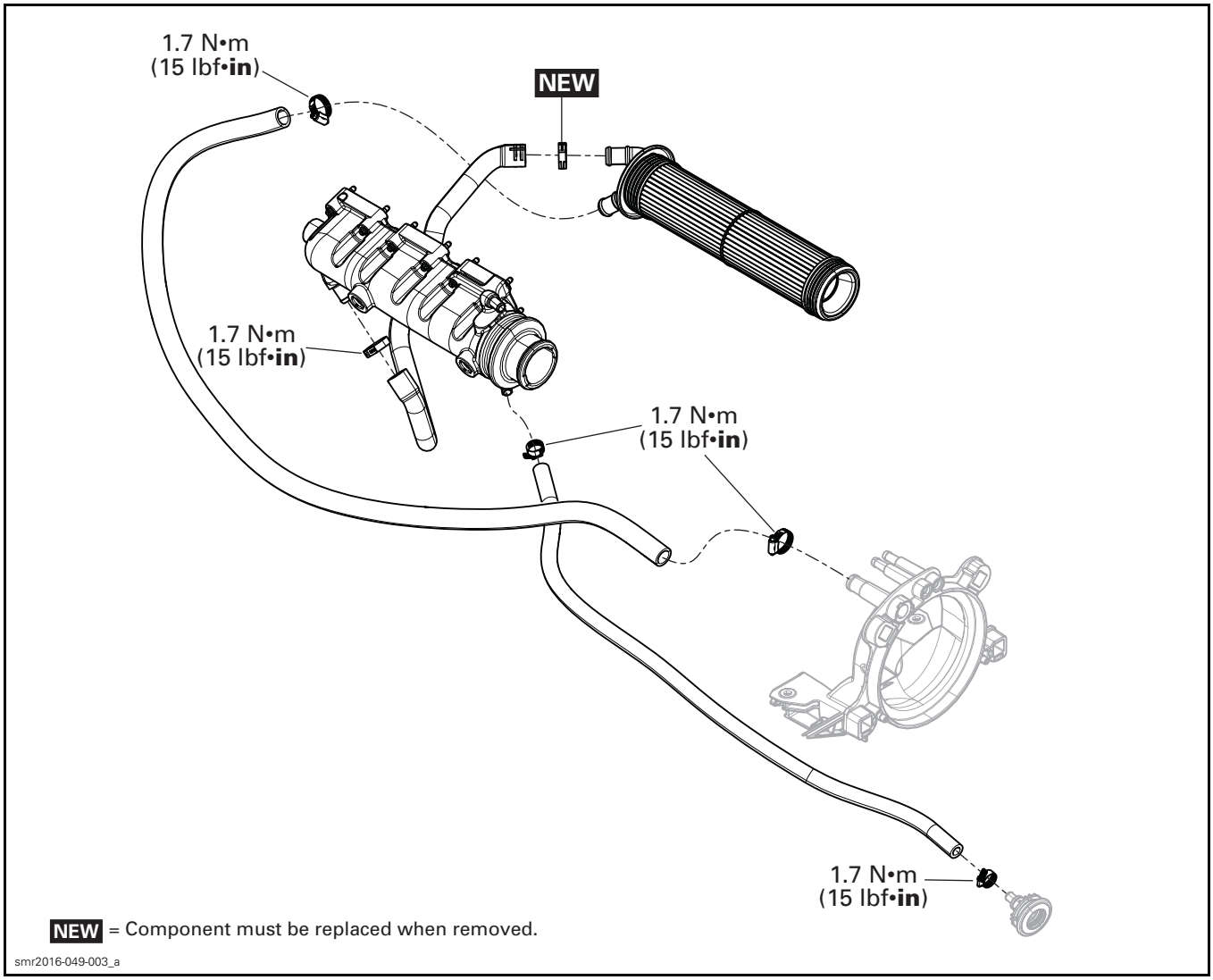
1.7 N•m
(15 lbf•in)
NEW
1.7 N•m
(15 lbf•in)
1.7 N•m
(15 lbf•in)
1.7 N•m
(15 lbf•in)
NEW = Component must be replaced when removed.
smr2016-049-003_a

260 Engines

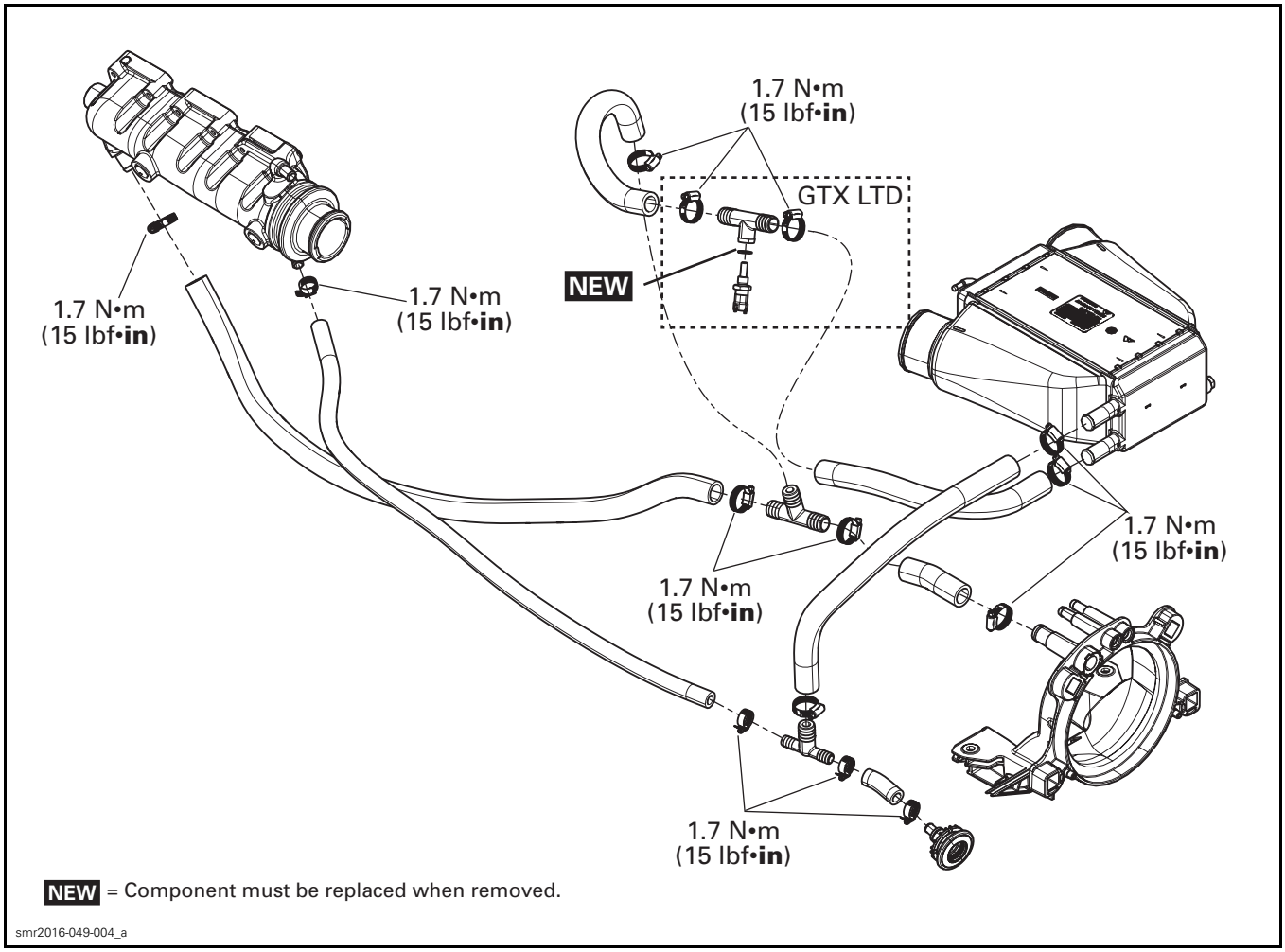
1.7 N•m
(15 lbf•in)
GTX LTD
NEW
1.7 N•m
(15 lbf•in)
1.7 N•m
(15 lbf•in)
1.7 N•m
(15 lbf•in)
1.7 N•m
(15 lbf•in)
1.7 N•m
(15 lbf•in)
NEW = Component must be replaced when removed.
smr2016-049-004_a

GENERAL

SYSTEM DESCRIPTION

The exhaust system is cooled by water provided by a pressurized area in the jet pump (open loop system).

The same water is also used to cool the intercooler.

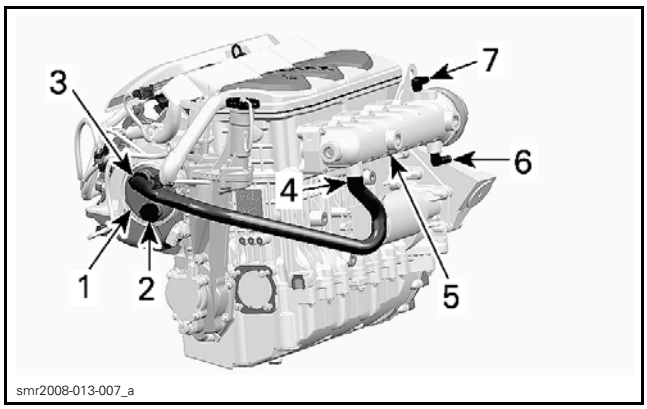

215 ENGINE
1. *Intercooler*
2. *Intercooler water inlet*
3. *Intercooler water outlet*
4. *Exhaust manifold water inlet*
5. *Exhaust manifold*
6. *Exhaust manifold water outlet (to pump support)*
7. *Exhaust manifold water outlet (to exhaust pipe and muffler)*

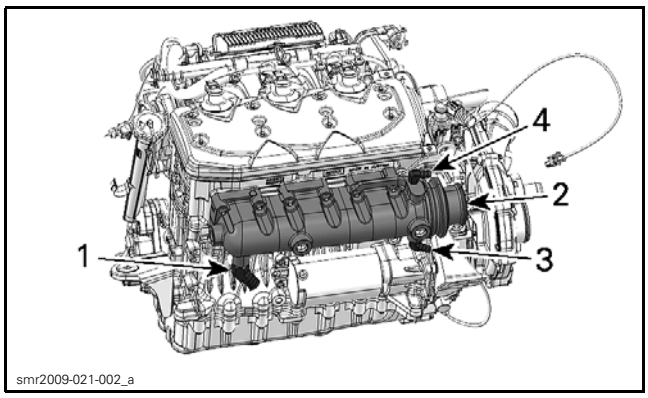

55 AND 260 ENGINES
1. *Exhaust manifold water inlet*
2. *Exhaust manifold*
3. *Exhaust manifold water outlet (to pump support)*
4. *Exhaust manifold water outlet (to exhaust pipe and muffler)*

Water from the exhaust manifold jacket is directed to the exhaust pipe via 2 hoses.

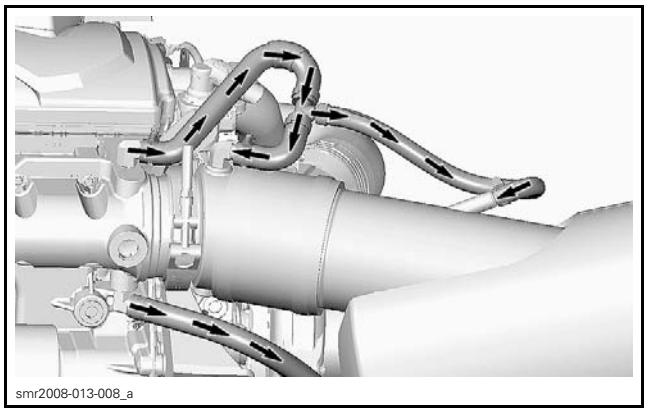

Water exits exhaust pipe water jacket through holes to inject water in muffler and resonator.

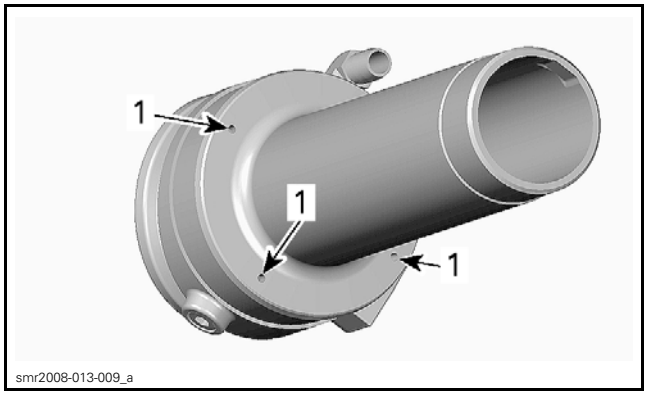

1. *Water packet holes*

Water is evacuated through the exhaust outlet in transom area.

Exhaust System Technical Specifications

TYPE	Total Loss Cooling System (TLCS)
WATER FLOW	Flow from jet pump (no water pump)
TEMPERATURE CONTROL	Calibrated outlet fittings (no thermostat)
SYSTEM BLEEDING	Self-bleed type
SYSTEM DRAINING	Self-drain type

MAINTENANCE

FLUSHING THE EXHAUST SYSTEM

Flushing the exhaust system with fresh water is essential to neutralize corroding effects of salt or other chemical products present in water. It will

help to clean up sand, salt, shells or other particles in water jackets (exhaust system, intercooler and hoses).

Exhaust system flushing should be performed when the watercraft is not expected to be used further the same day or when the watercraft is stored for any extended time.

NOTICE **Failure to flush the system, when necessary, will severely damage intercooler and exhaust system. Make sure engine operates during entire procedure.**

⚠ WARNING

Perform these operations in a well ventilated area. Certain components in the engine compartment may be very hot. Direct contact may result in skin burn. Do not touch any electrical part or jet pump area when engine is running.

⚠ WARNING

When operating the engine while the watercraft is out of the water, the heat exchanger in the ride plate may become very hot. Avoid any contact with ride plate as burns may occur.

Connect a garden hose to connector located at the rear of watercraft. Do not open water tap yet.

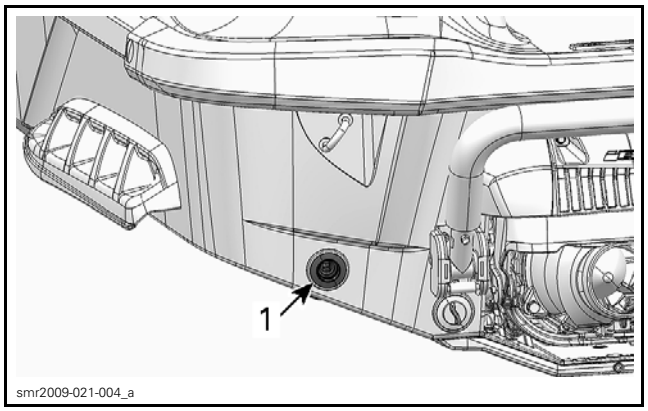

1. Water inlet connector

NOTE: The following tool is recommended when a quick connect adapter is used to ease garden hose installation.

RECOMMENDED TOOL	
FLUSHING CONNECTOR ADAPTER (P/N 295 500 473)	

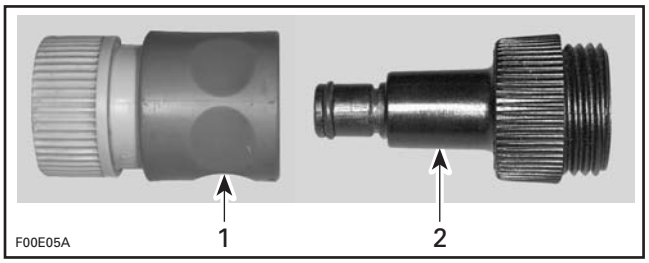

1. Quick connect adapter
2. Flushing connector adapter

To flush the exhaust system, start the engine then immediately open the water tap.

NOTICE **Always start the engine before opening the water tap. Open water tap immediately after engine is started to prevent overheating. Never run engine without supplying water to the exhaust system when watercraft is out of water.**

Run the engine about 20 seconds at a fast idle between 4000 - 5000 RPM.

NOTICE **Never run engine longer than 2 minutes. Drive line seal has no cooling when watercraft is out of water.**

Ensure water flows out of jet pump while flushing.

Close the water tap, then stop the engine.

NOTICE **Always close the water tap before stopping the engine.**

Disconnect the garden hose.

NOTICE **Remove flushing connector adapter after operation (if used).**

PROCEDURES

MUFFLER

⚠ CAUTION **Certain components in the engine compartment may be very hot. Let exhaust system cool down prior to removing parts.**

Muffler Access

Models with Suspension

Open seat.

Remove moving deck and deck extension. Refer to *BODY (GTX, RXT AND WAKE PRO SERIES)* subsection.

Remove the air intake silencer. Refer to *AIR INTAKE SILENCER (MODELS WITH SUSPENSION)* subsection.

Models Without Suspension

Remove or open seat.

Removing the Muffler

1. Cut locking tie securing water outlet hose (exhaust system) and blow-by hose.
2. Disconnect the water outlet hose from the exhaust manifold.
3. Gently disconnect the hose from blow-by valve.

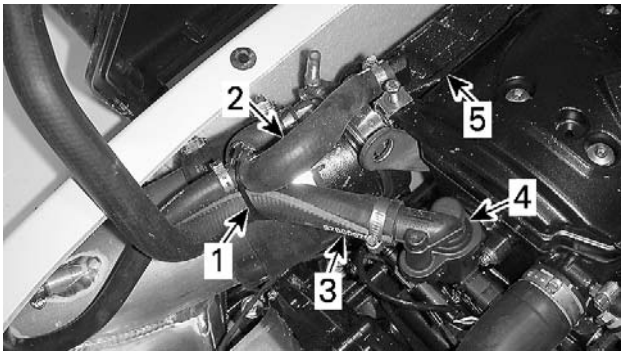

smr2009-016-003_a

TYPICAL
1. *Cut this locking tie*
2. *Water outlet hose (exhaust system)*
3. *Blow-by hose*
4. *Blow-by valve*
5. *Exhaust manifold*

4. Unscrew exhaust clamp.

NOTICE **Do not use pneumatic or electrical tools as seizure may occur.**

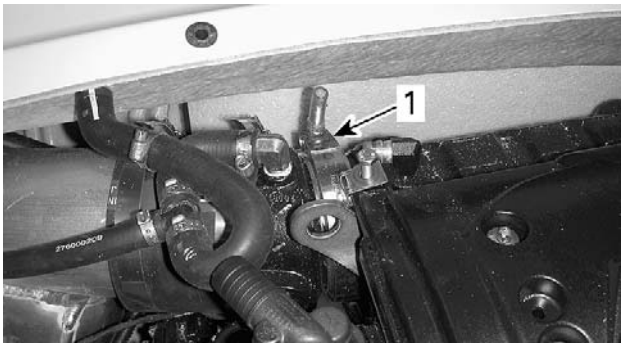

smr2009-016-007_a

TYPICAL
1. *Exhaust clamp*

5. Unplug the exhaust gas temperature sensor (EGTS).

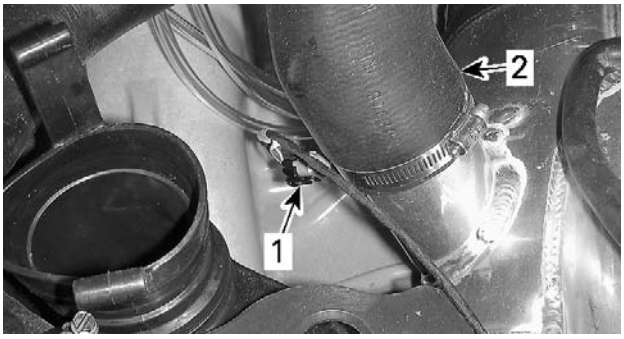

smr2009-016-004_a

TYPICAL
1. *EGTS sensor*
2. *Exhaust hose*

6. Disconnect the exhaust hose from muffler.

smr2009-016-005_a

TYPICAL
1. *Exhaust hose clamp*

7. Detach retaining strap.

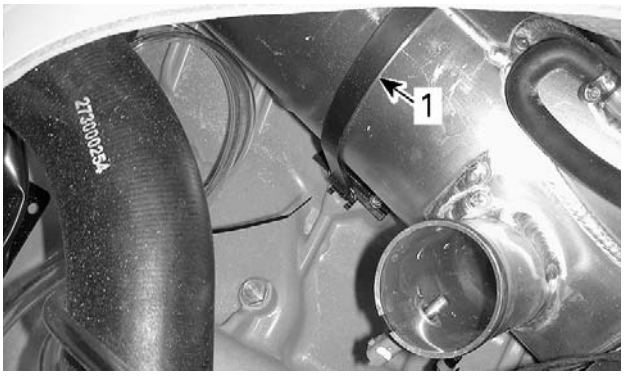

smr2009-016-006_a

TYPICAL
1. *Muffler retaining strap*

8. Remove the muffler.
   - On **models with suspension**, remove the LH rear storage basket then move the muffler backwards and slide it through the rear opening.
   - On **models without suspension**, move the muffler back then slide it forward through the deck opening.

Inspecting the Muffler

Check muffler for:
- Cracks
- Corrosion
- Other damages.

Check if exhaust hose is:
- Brittle
- Hard
- Cracked
- Otherwise damaged.

Replace any defective part.

Installing the Muffler

With a new muffler, install the EGTS sensor. Refer to *ELECTRONIC FUEL INJECTION (EFI)* subsection.

Open muffler adjusters by sliding adjuster blocks.

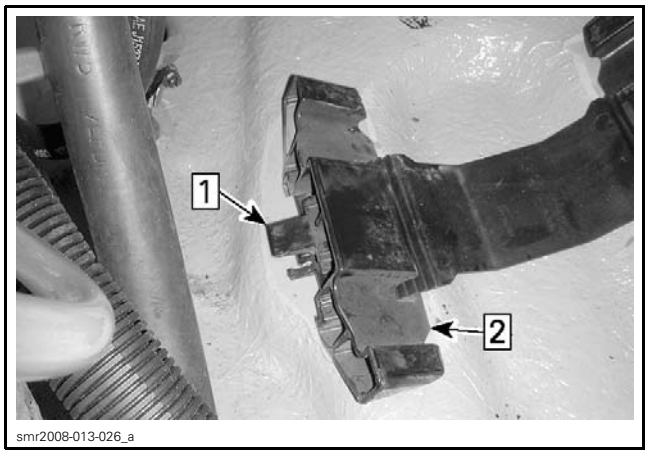

TYPICAL – RUBBER PAD REMOVED FOR CLARITY PURPOSE
Step 1: Lift adjuster tab
Step 2: Move adjuster outward

Insert the muffler in hull.

Align the exhaust pipe flange with the exhaust manifold. Rotate and move muffler so that the exhaust pipe flange makes perfect contact with exhaust manifold.

Slide both adjuster blocks against muffler to support it in position.

NOTE: Ensure muffler is in contact with both adjuster blocks. Readjust as required.

Install exhaust clamp with the nut upward.

Tighten clamp loosely.

Using a spacer, position the exhaust pipe.

REQUIRED SPACER	
All models	50 mm (2 in)

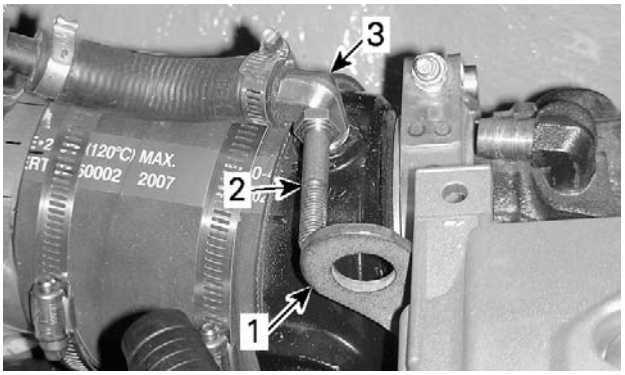

TYPICAL
1. *Engine lifting ring*
2. *Spacer (in this case a bolt)*
3. *Exhaust pipe fitting*

Confirm that the exhaust pipe mark is aligned with the mark on the exhaust manifold.

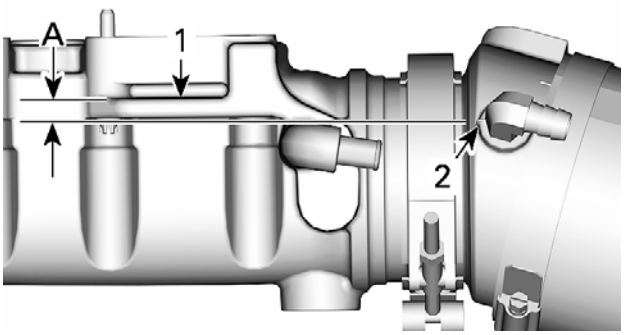

1. *Exhaust manifold rib wall facing the engine*
2. *Exhaust pipe mark*

A. 35 mm (1-3/8 in)

Tighten exhaust clamp to specification.

TIGHTENING TORQUE	
Exhaust clamp	11 N•m (97 lbf•**in**)

NOTICE **Do not use pneumatic or electric tools as seizure may occur.**

Install the muffler strap.

NOTICE **Ensure not to rotate muffler during strap installation. The use of a soapy water solution on inner side of muffler strap is recommended.**

Install all other removed parts.

After installation, ensure there is no water or exhaust gas leak when engine is running.

Test run the engine while supplying water to the exhaust system.

NOTICE Never run engine without supplying water to the exhaust system when watercraft is out of water.

EXHAUST HOSES

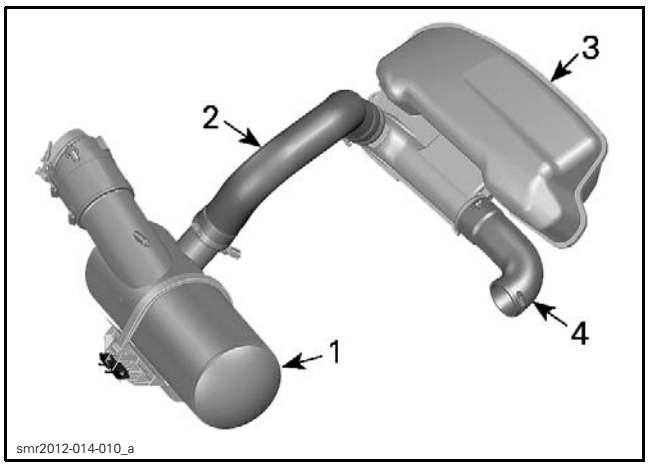

1. *Muffler*
2. *Front exhaust hose*
3. *Resonator*
4. *Rear exhaust hose*

Replacing the Front Exhaust Hose

Models with Suspension

Remove the LH rear storage basket.

Remove the deck extension. Refer to *BODY (GTX, RXT AND WAKE PRO SERIES)* subsection.

Models Without Suspension

Remove seat.

All Models

Cut all locking ties from exhaust hose.

Remove exhaust hose from the muffler outlet and resonator.

Remove front exhaust hose from vehicle.

When reinstalling exhaust hose, make sure to attach elbow fittings at the highest position that you can on the exhaust hose.

Replace all locking ties previously cut.

Tighten retaining clamps to specification.

TIGHTENING TORQUE	
Front exhaust hose clamp	4 N•m (35 lbf•**in**)

Install all other removed parts.

After installation, ensure there is no water or exhaust gas leak when the engine is running. Test run the engine while supplying water to the exhaust system.

NOTICE Never run engine without supplying water to the exhaust system when watercraft is out of water.

Replacing the Rear Exhaust Hose

Models with Suspension

Remove battery and battery holder. Refer to *CHARGING SYSTEM* subsection.

Loosen clamps securing rear exhaust hose to resonator and RH fixation plate.

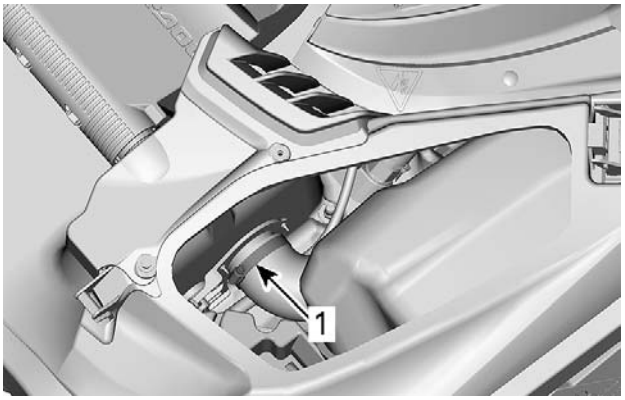

1. *Retaining clamps*

Remove the rear exhaust hose from vehicle.

Models Without Suspension

Remove the resonator. See procedure in this subsection.

Loosen clamp securing the rear exhaust hose to RH fixing plate.

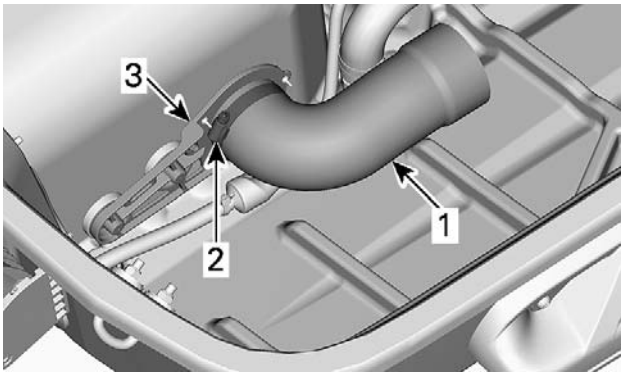

DECK REMOVED FOR CLARITY

1. *Rear exhaust hose*
2. *Hose clamp*
3. *RH fixing plate*

All Models

When reinstalling rear exhaust hose, tighten clamps to specification.

TIGHTENING TORQUE	
Rear exhaust hose clamp	4 N•m (35 lbf•**in**)

Reinstall all other removed parts.

After installation, ensure there is no water or exhaust gas leak when the engine is running. Test run the engine while supplying water to the exhaust system.

NOTICE **Never run engine without supplying water to the exhaust system when watercraft is out of water.**

EXHAUST PIPE

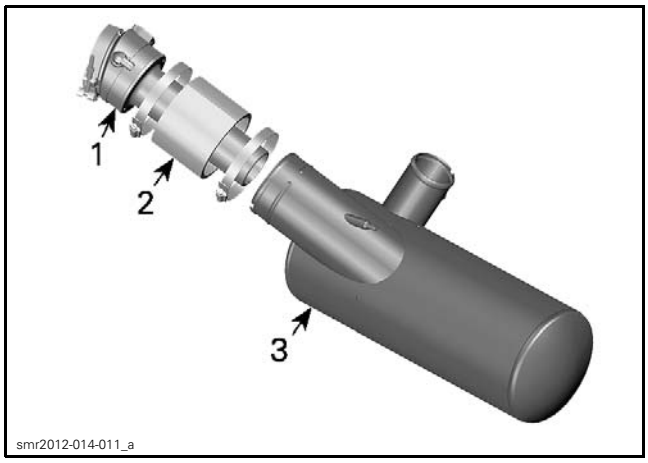

1. *Exhaust pipe*
2. *Rubber adapter*
3. *Muffler*

Removing the Exhaust Pipe

Remove *MUFFLER*, see procedure in this subsection.

Disconnect water inlet hose from exhaust pipe fitting.

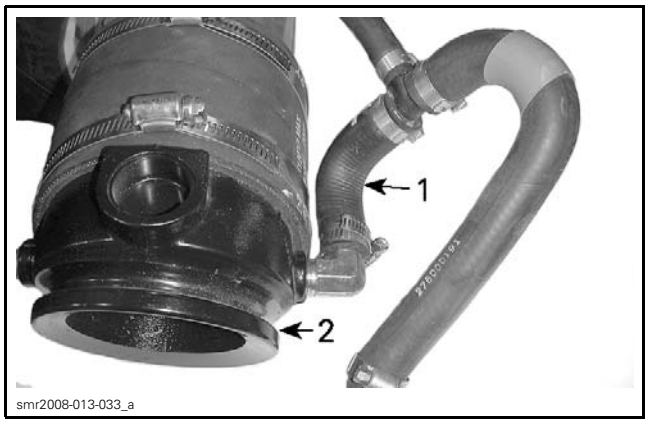

1. *Water inlet hose*
2. *Exhaust pipe*

Loosen rubber adapter clamps.

Remove exhaust pipe and the rubber adapter.

Inspecting the Exhaust Pipe

Inspect exhaust pipe for:
- Cracks
- Flange damages
- Other damages.

Replace exhaust pipe as required.

Check if the rubber adapter is:
- Brittle
- Hard
- Otherwise damaged.

Replace rubber adapter if necessary.

Installing the Exhaust Pipe

Install rubber adapter on muffler.

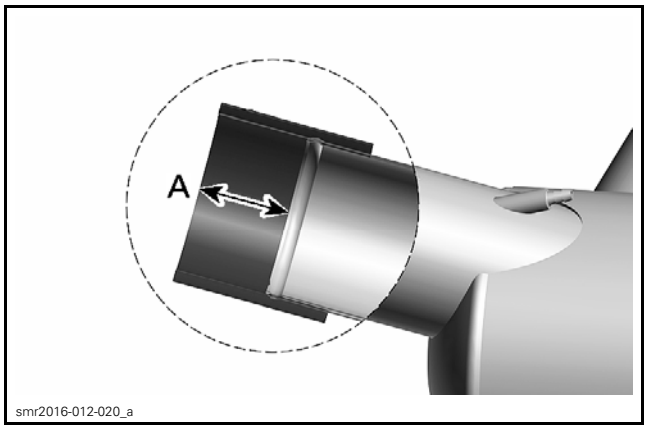

SECTION VIEW
1. *57 mm ± 2 mm (2-1/4 in ± 5/64 in)*

Center the muffler pre-mark with the BLUE strip on rubber adapter.

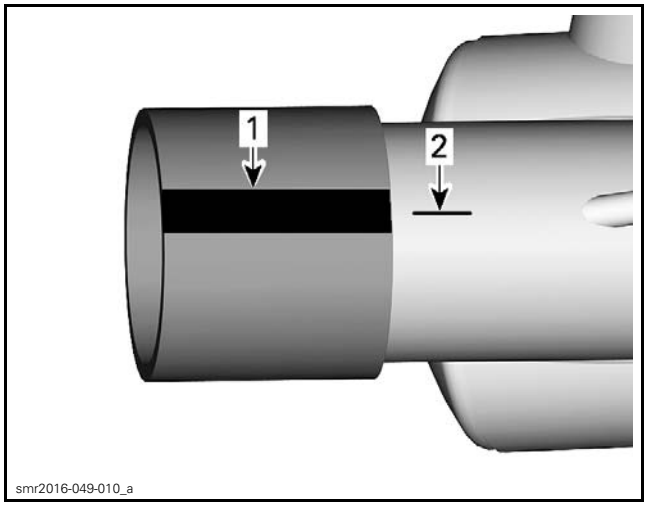

1. *Muffler pre-mark*
2. *Blue strip on rubber adapter*

Secure the rubber adapter to the muffler using retaining clamp.

TIGHTENING TORQUE	
Rubber adapter retaining clamp	9.5 N•m ± 0.5 N•m (84 lbf•**in** ± 4 lbf•**in**)

Install the exhaust pipe in the rubber adapter. Ensure rubber adapter is properly seats against exhaust pipe shoulder.

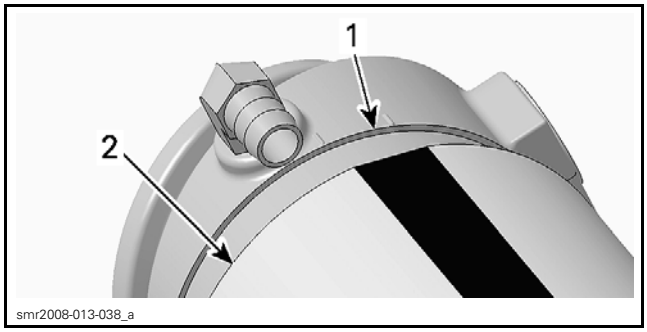

1. *Exhaust pipe shoulder*
2. *Rubber adapter*

Center the rubber adapter strip of the rubber adapter between both exhaust pipe marks.

Tighten retaining clamp.

TIGHTENING TORQUE	
Rubber adapter retaining clamp	9.5 N•m (84 lbf•**in**)

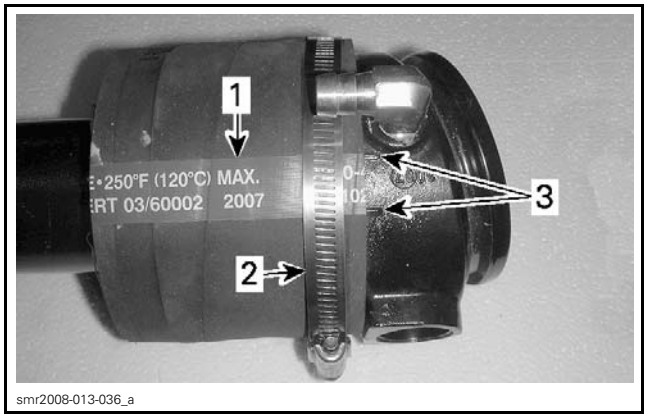

1. *Rubber adapter strip*
2. *Retaining clamp*
3. *Exhaust pipe marks*

Install muffler in vehicle. Refer to *INSTALLING THE MUFFLER* in this subsection for complete procedure.

EXHAUST MANIFOLD

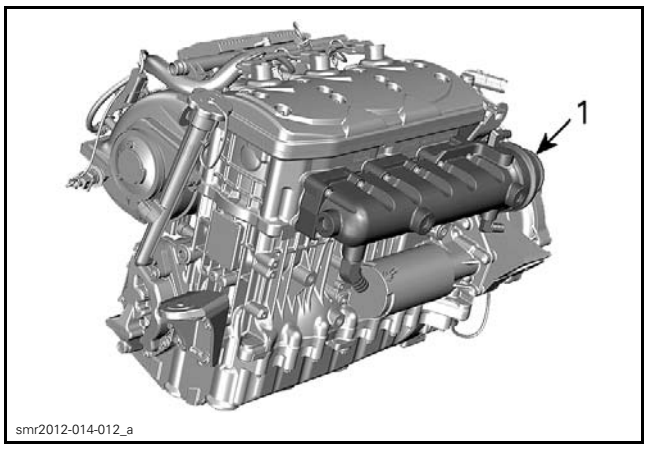

1. *Exhaust manifold*

Removing the Exhaust Manifold

1. On **models with suspension**, remove the moving deck and the deck extension. Refer to *BODY (GTX, RXT AND WAKE PRO SERIES)* subsection.
2. Move muffler rearwards to make room. Refer to *REMOVING THE MUFFLER* in this subsection to know how separate muffler from exhaust manifold.
3. Disconnect the exhaust manifold water outlet hose.

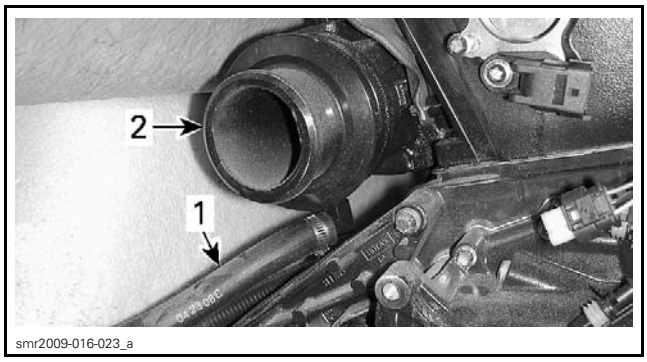

1. *Water outlet hose*
2. *Exhaust manifold*

4. Disconnect exhaust manifold water inlet hose from exhaust manifold.

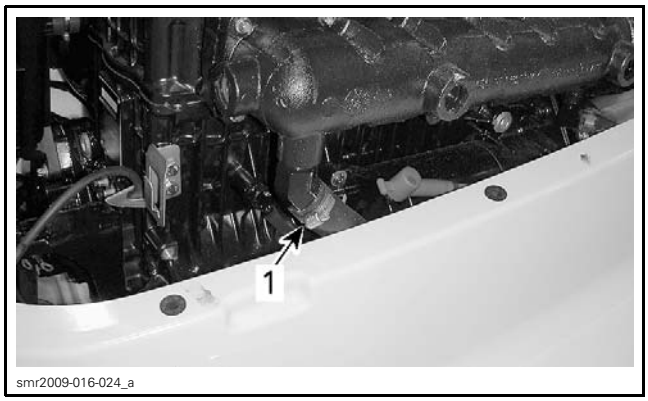

TYPICAL – iS MODEL SHOWN
1. Exhaust manifold water inlet hose

5. Unscrew the exhaust manifold beginning with the bottom screws. This will help holding the manifold while you remove the screws.
6. Remove the exhaust manifold from vehicle.
   – On **models with suspension**, move the exhaust manifold rearwards to remove it.
   – On **models without suspension**, lift up the exhaust manifold to remove it.

Inspecting the Exhaust Manifold

Inspect exhaust manifold condition paying attention for cracks or other damage. Check contact surfaces and hose. Replace any defective part.

Inspect plane surfaces for warpage. Small deformation can be corrected by grinding surface with a fine sand paper. Install sand paper on a surface plate and rub part against oiled sand paper.

Clean all metal components in a solvent.

Installing the Exhaust Manifold

The installation is the reverse of the removal procedures. However, pay particular attention to the following.

NOTE: There is no gasket between cylinder block and exhaust manifold.

Apply LOCTITE 243 (BLUE) (P/N 293 800 060) on threads of screws.

To help holding the manifold while installing screws, first insert the exhaust manifold into the exhaust pipe then, install the upper front screw. Continue with the remaining screws.

Torque screws to specification as per following illustrated sequence. Repeat the procedure twice.

TIGHTENING TORQUE	
Exhaust manifold screws	9 N•m (80 lbf•**in**)

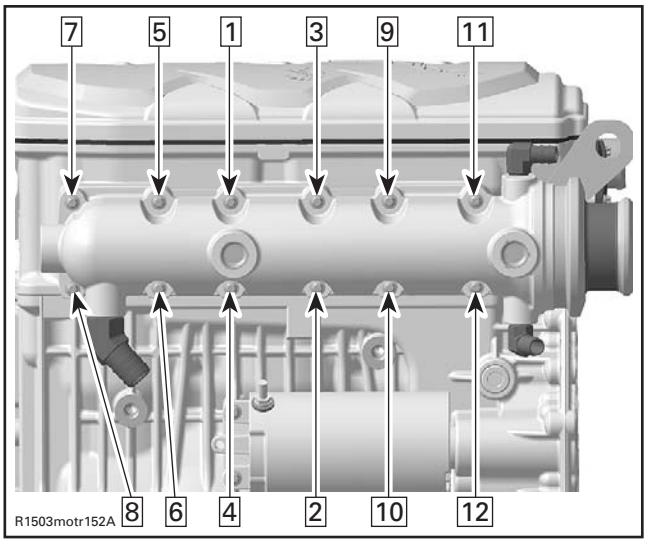

After installation, ensure there is no water or exhaust gas leak when the engine is running. Test run the engine while supplying water to the flushing connector.

NOTICE **Never run engine without supplying water to the exhaust system when watercraft is out of water.**

RESONATOR

Removing the Resonator

Models with Suspension

1. Remove engine from vehicle. Refer to *ENGINE REMOVAL AND INSTALLATION* subsection.
2. Remove battery and battery holder. Refer to *CHARGING SYSTEM* subsection.
3. Loosen clamp securing rear exhaust hose to resonator.
4. Remove the screw securing the front of the resonator.

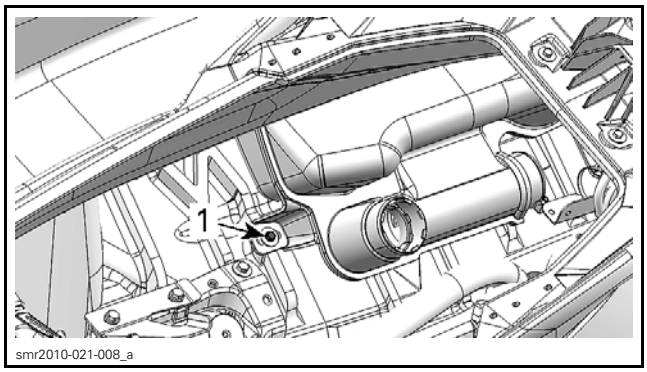

TYPICAL – MODEL WITHOUT iS SHOWN
1. Resonator retaining screw

5. Remove the front exhaust hose from resonator.

6. Remove resonator from vehicle.

Models Without Suspension

1. Remove seat.
2. Detach the front exhaust hose from the resonator.
3. Remove screw and washer securing the front of the resonator.

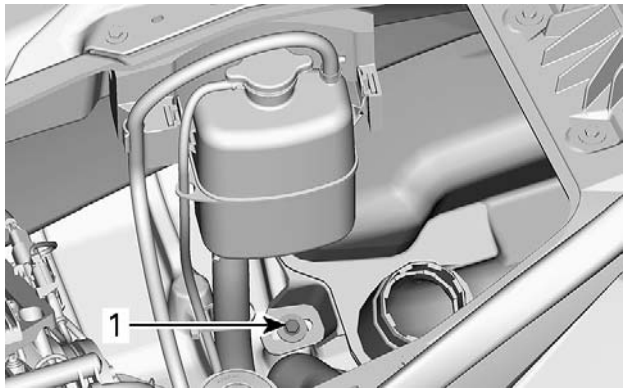

TYPICAL
1. Resonator retaining screw

4. Loosen clamp securing the rear exhaust hose to resonator.

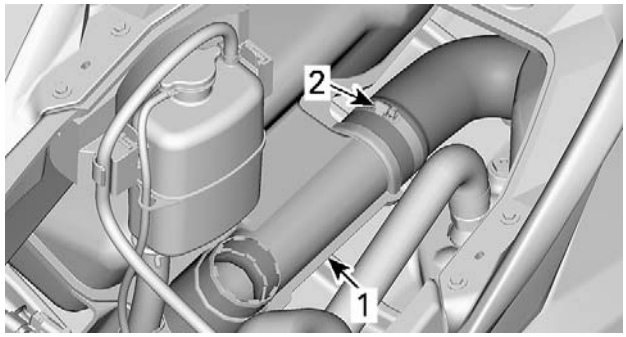

TYPICAL
1. Resonator
2. Loosen this clamp

5. Slide resonator by the deck opening.

Inspecting the Resonator

Inspect parts condition paying attention for deformation, cracks or other damage. Check hoses. Replace any defective part.

Installing the Resonator

Installation is the reverse of the removal procedures. However, pay attention to the following.

After installation, ensure there is no water or exhaust gas leak when the engine is running. Test run the engine while supplying water to the exhaust system.

NOTICE **Never run engine without supplying water to the exhaust system when watercraft is out of water.**

LUBRICATION SYSTEM

SERVICE TOOLS

Description	Part Number	Page
ADAPTER HOSE	529 035 652	9
BACK PROBE TEST WIRES	529 036 063	28
CERAMIC SEAL PULLER	529 036 365	16
ECM ADAPTER TOOL	529 036 166	11, 28
FLUKE 115 MULTIMETER	529 035 868	11, 28
HANDLE	420 877 650	17
OIL SEAL GUIDE	529 035 822	16
OIL SEAL PUSHER	529 035 757	17
PRESSURE GAUGE	529 035 709	9
SUCTION PUMP	529 035 880	7
SUPERCHARGER OIL SPRAY NOZZLE TOOL	529 036 134	22
WATER PUMP SEAL PUSHER	529 035 823	16–17

SERVICE PRODUCTS

Description	Part Number	Page
LOCTITE 243 (BLUE)	293 800 060	12, 14, 16, 21–22, 27, 30
LOCTITE 5910	293 800 081	13
PULLEY FLANGE CLEANER	413 711 809	8, 18
SUPER LUBE GREASE	293 550 030	9
XPS 4-STROKE SYNTH. BLEND OIL	293 600 121	6

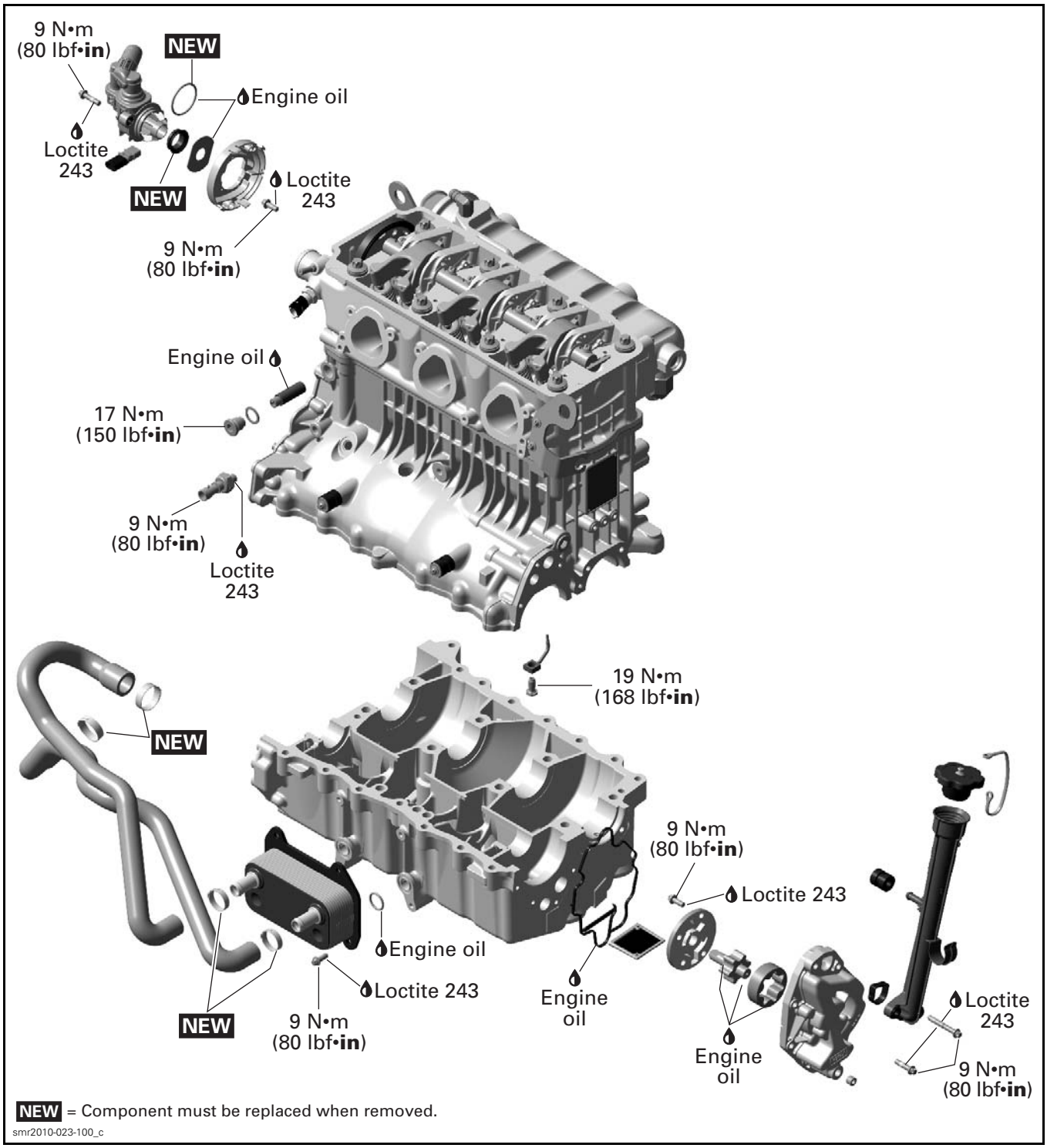
9 N•m
(80 lbf•in)
NEW
Engine oil
Loctite
243
NEW
Loctite
243
9 N•m
(80 lbf•in)
Engine oil
17 N•m
(150 lbf•in)
9 N•m
(80 lbf•in)
Loctite
243
19 N•m
(168 lbf•in)
NEW
9 N•m
(80 lbf•in)
Loctite 243
Engine oil
Loctite 243
NEW
9 N•m
(80 lbf•in)
Engine
oil
Engine
oil
Loctite
243
9 N•m
(80 lbf•in)
NEW = Component must be replaced when removed.
smr2010-023-100_c

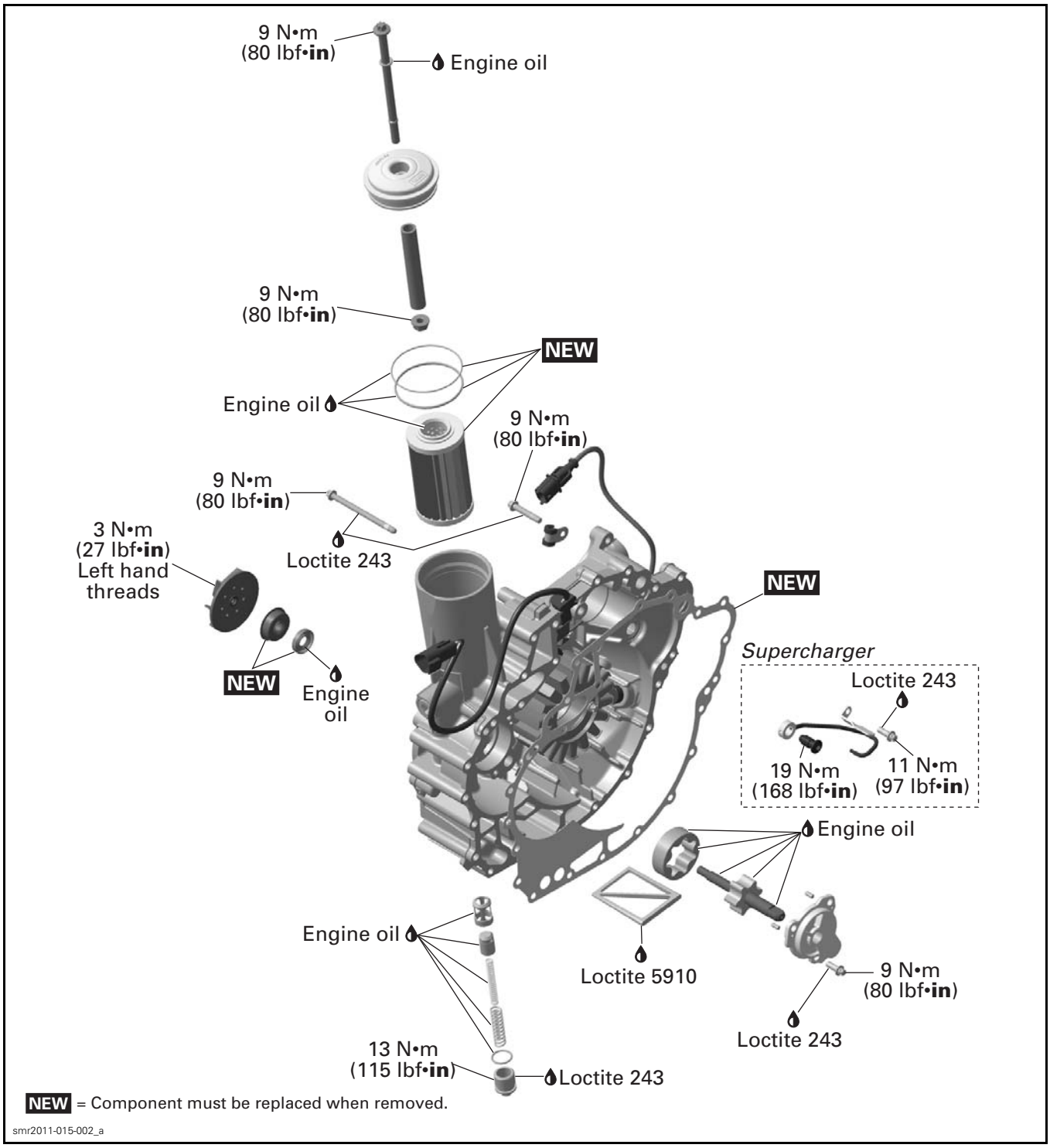
9 N•m
(80 lbf•in)
Engine oil
9 N•m
(80 lbf•in)
NEW
Engine oil
9 N•m
(80 lbf•in)
9 N•m
(80 lbf•in)
3 N•m
(27 lbf•in)
Left hand
threads
Loctite 243
NEW
NEW
Engine
oil
Supercharger
Loctite 243
19 N•m
(168 lbf•in)
11 N•m
(97 lbf•in)
Engine oil
Engine oil
Loctite 5910
9 N•m
(80 lbf•in)
Loctite 243
13 N•m
(115 lbf•in)
Loctite 243
NEW = Component must be replaced when removed.
smr2011-015-002_a

ENGINE LUBRICATION CIRCUIT

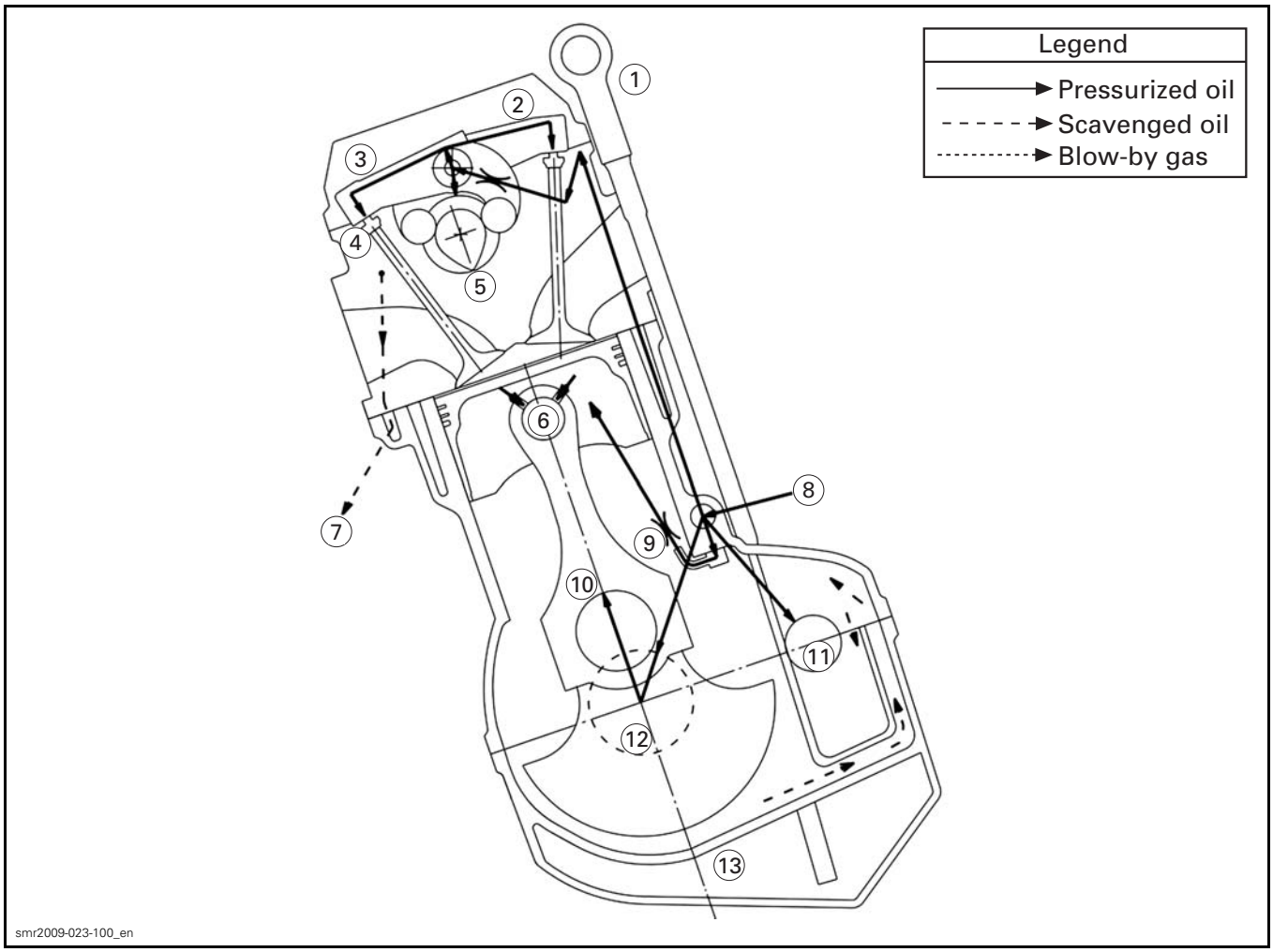

1. *Oil dipstick*
2. *Rocker arm (intake)*
3. *Rocker arm (exhaust)*
4. *Hydraulic valve lifter*
5. *Camshaft*
6. *Piston pin*
7. *Into PTO housing*
8. *From oil filter*
9. *Piston cooling*
10. *Connecting rod*
11. *Balance shaft*
12. *Crankshaft*
13. *Oil tank*

ENGINE LUBRICATION CIRCUIT (CONT'D)

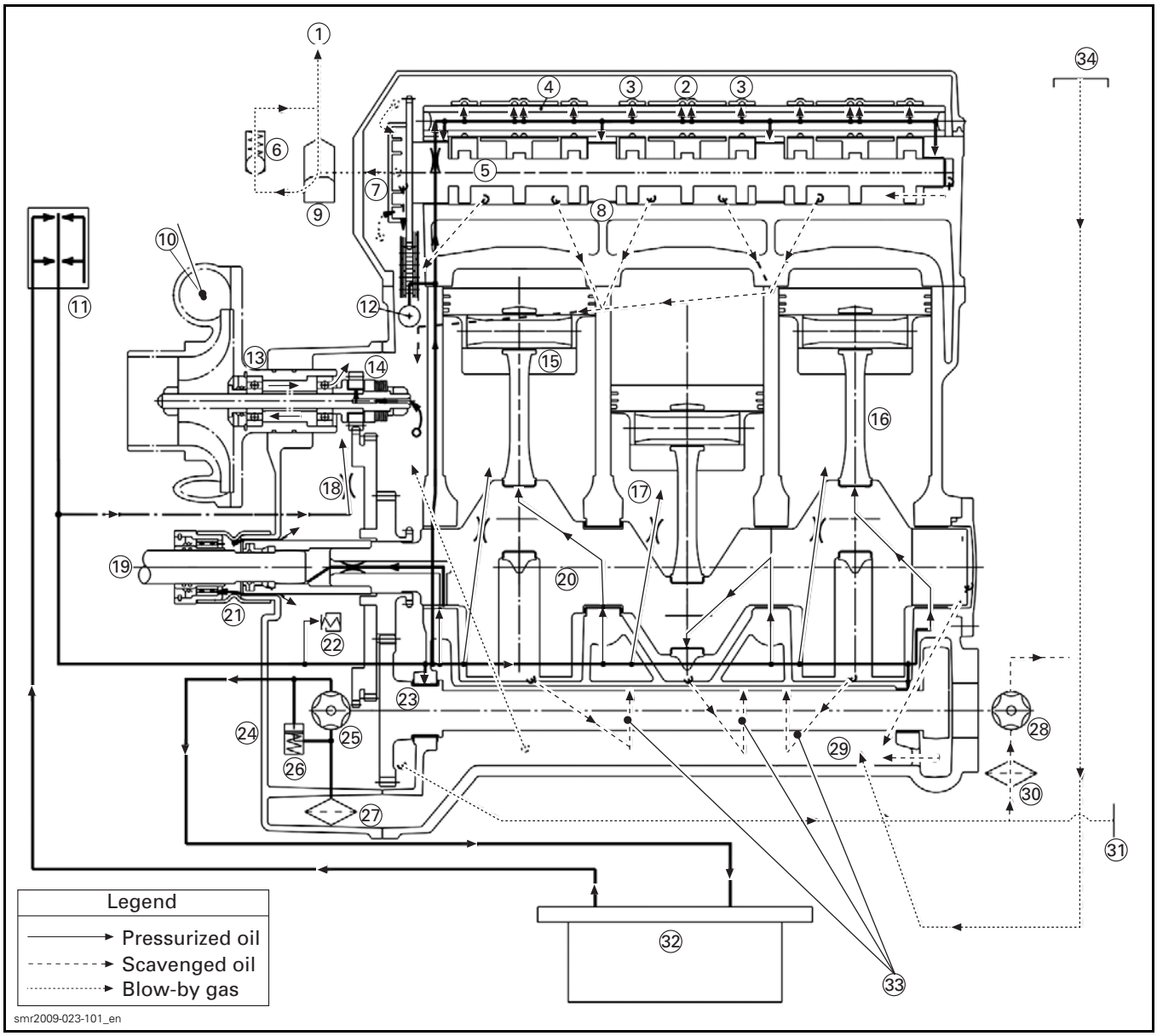

1. To air intake silencer
2. Rocker arm (intake)
3. Rocker arm (exhaust)
4. Rocker arm axle
5. Camshaft
6. Pressure relief valve
7. Oil separator
8. Cylinder head
9. Blow-by valve
10. Supercharger (if so equipped)
11. Oil filter
12. Hydraulic chain tensioner
13. Supercharger bearing (if so equipped)
14. Friction clutch
15. Piston pin
16. Connecting rod
17. Piston cooling
18. Oil spray nozzle
19. Drive shaft
20. Crankshaft
21. PTO seal
22. Oil pressure switch
23. Balance shaft
24. PTO housing
25. Pressure pump
26. Pressure relief valve
27. Oil strainer (pressure pump)
28. Scavenge pump
29. Oil tank
30. Oil strainer (scavenge pump)
31. Oil drainage (PTO housing)
32. Oil cooler
33. Scavenge of oil and blow-by gas
34. Oil filler cap

MAINTENANCE

ENGINE OIL

Recommended Oil

Use XPS 4-STROKE SYNTH. BLEND OIL (P/N 293 600 121).

Naturally-Aspirated Engines

If the recommended XPS™ engine oil is not available, use a 5W 40 or 10W 40 engine oil meeting the requirements for API service classification SM, SL or SJ. Always check the API service label certification on the oil container, it must contain at least one of the above standards.

Supercharged Intercooled Engines

If XPS™ engine oil is not available, use a 10W40 **mineral** engine oil compatible with wet clutches.

NOTE: The XPS engine oil has been thoroughly tested to be free of any additives that could impair the functionality of the supercharger clutch.

NOTICE **NEVER use synthetic oil. This would impair the proper operation of the supercharger clutch. Do not add any additives to the recommended oil. Mineral oils not recommended by BRP may also contain additives (friction modifiers) that may cause inappropriate slippage of the supercharger and eventually lead to premature wear. For this reason, XPS Synthetic Blend oil (Summer Grade) or a BRP approved equivalent are the only recommended oils. Use of any oil not recommended by BRP may void BRP's limited warranty.**

Verifying the Oil Level

NOTICE **Check level frequently and refill if necessary. Do not overfill — it would make the engine smoke and reduce its power. Operating the engine with an improper level may severely damage engine. Wipe off any spillage.**

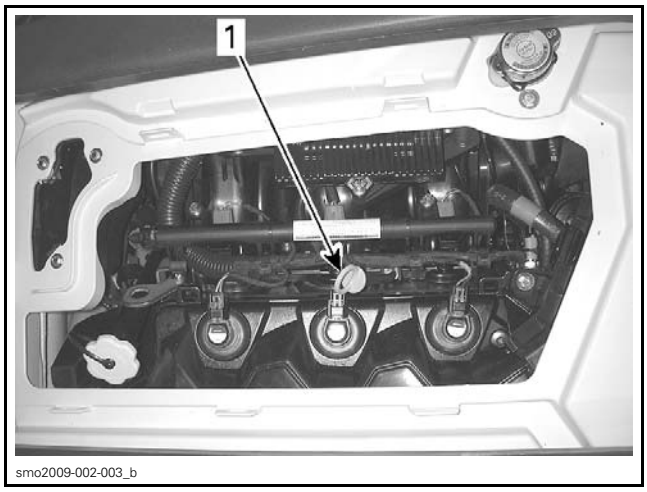

TYPICAL – iS MODELS SHOWN
1. Oil dipstick

Check the oil level as follows:

NOTE: It is of the utmost importance to follow this procedure in order to obtain an accurate reading of the engine oil level.

1. Watercraft must be level. Check oil level either with watercraft in water or out of water.

NOTE: If the watercraft is out of water, link a garden hose to the hose adapter. Refer to *FLUSHING THE EXHAUST SYSTEM* in the *EXHAUST SYSTEM* subsection.

NOTICE **When watercraft is out of water:**
- **Never run engine without supplying water to the exhaust system.**
- **Never run engine longer than 2 minutes. Drive line seal has no cooling when watercraft is out of water.**

2. **Warm-up** engine then let idle for **30 seconds** before stopping.
3. Stop engine.
4. Open or remove seat.
5. On **models with suspension**, remove the ventilation box from the deck extension to gain partial access to engine compartment.

NOTE: To remove the rear ventilation box, simply release the 3 clips retaining it and lift it off the deck extension.

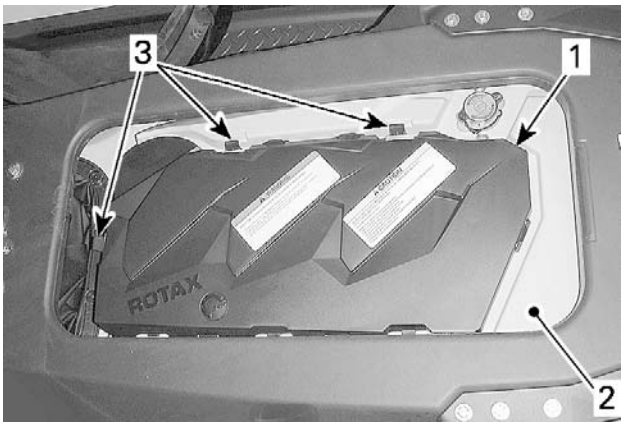

smo2009-002-002_a

1. *Rear ventilation box*
2. *Deck extension*
3. *Retaining clips*

6. Wait at least 30 seconds for the oil to settle in the engine, then pull dipstick out and wipe clean.

⚠ CAUTION **Engine oil may be hot. Certain components in the engine compartment may be very hot. Direct contact may result in skin burn.**

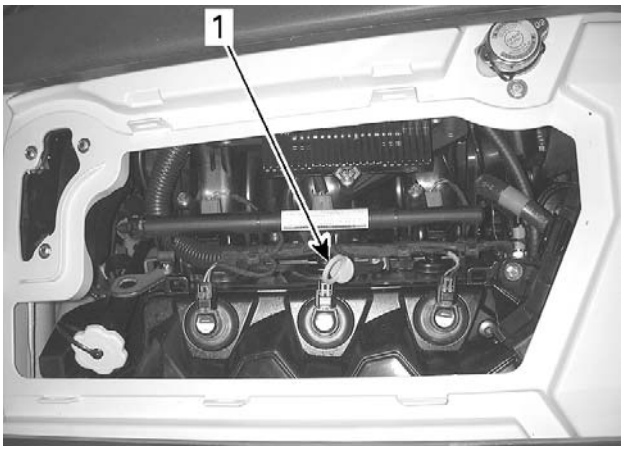

smo2009-002-003_b

TYPICAL – iS MODELS SHOWN
1. *Oil dipstick*

7. Reinstall dipstick, push in completely.
8. Remove dipstick and read oil level. It should be between the FULL and ADD marks.

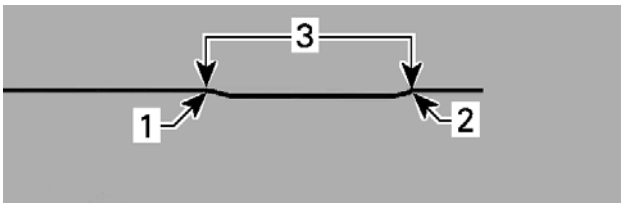

lmr2007-053-100_a

1. *Full*
2. *Add*
3. *Operating range*

Otherwise, add oil until its level is between marks as required.

To add oil, unscrew oil cap. Place a funnel into the oil filler neck opening and add the recommended oil to the proper level. Do not overfill.

Oil Change

NOTE: Oil and oil filter must be replaced at the same time. Oil change and oil filter replacement should be done with a warm engine.

Bring engine to its normal operating temperature.

NOTICE **When watercraft is out of water:**

- **Never run engine without supplying water to the exhaust system.**
- **Never run engine longer than 2 minutes. Drive line seal has no cooling when watercraft is out of water.**

Run engine for 10 seconds at 4000 RPM and shut it off at this RPM. This will move oil from PTO housing to oil tank to allow maximum oil draining.

Remove oil filler cap and dipstick.

⚠ CAUTION **Engine oil may be hot. Certain components in the engine compartment may be very hot. Direct contact may result in skin burn.**

Siphon oil through the dipstick tube.

REQUIRED TOOL	
SUCTION PUMP (P/N 529 035 880)	

NOTICE **Never crank or start engine when suction pump hose is in the dipstick tube. Never start engine when there is no oil in engine.**

NOTE: To properly position the suction pump hose is located at the proper height to siphon oil, it is suggested to put some electrical tape on hose at 475 mm (18-11/16 in) from its end. Then, insert the hose until you reach the tape.

TYPICAL
1. *Suction pump*
2. *Suction pump hose in the dipstick tube*

Pull suction pump hose out of dipstick tube.

Fully depress the throttle lever and HOLD it while cranking engine for 10 seconds. Siphon oil again. Repeat the crank-siphon cycle 2 - 3 times.

Refill engine with the recommended oil, see *RECOMMENDED OIL* in this subsection.

Reinstall oil filler cap and dipstick.

Replace *OIL FILTER*, see procedure in this subsection.

OIL FILTER

Removing the Oil Filter

Remove:
- Oil filter screw
- Oil filter cover
- Oil filter.

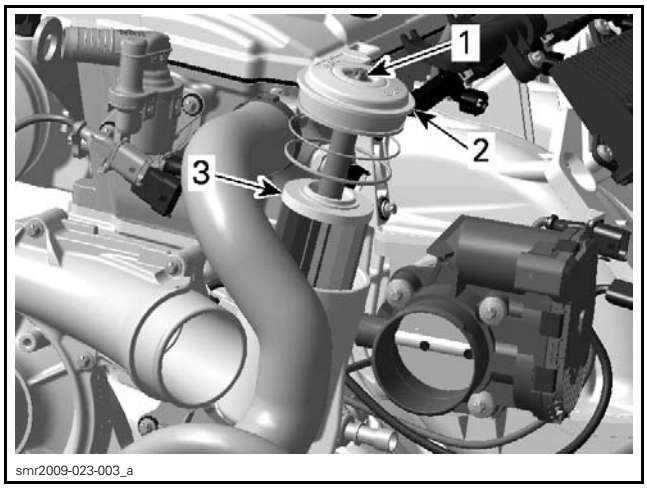

1. *Oil filter screw*
2. *Oil filter cover*
3. *Oil filter*

Place rags in filler area to prevent spillage. If spillage occurs, clean immediately with the PULLEY FLANGE CLEANER (P/N 413 711 809) to prevent stains.

Inspecting the Oil Filter

Check oil filter screw O-ring, change if necessary.

Check and clean the oil filter inlet and outlet area for dirt and other contaminations.

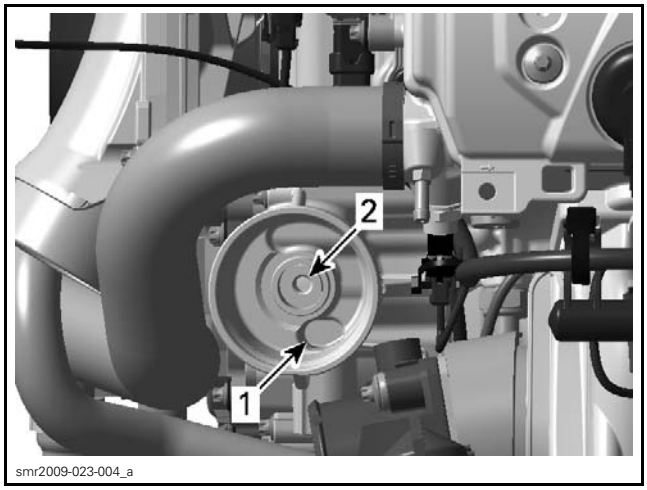

1. *Inlet bore from the oil pump to the oil filter*
2. *Outlet bore to the engine oil providing system*

Installing the Oil Filter

For installation, reverse the removal procedure. Pay attention to the following details.

Install a NEW oil filter.

Install NEW O-rings on oil filter cover.

Apply engine oil on filter ring, filter cover O-rings and on oil filter screw O-ring.

NOTE: In salt water area, it is recommended to coat mating surface of cover with SUPER LUBE GREASE (P/N 293 550 030).

Torque oil filter screw to specification.

TIGHTENING TORQUE	
Oil filter screw	9 N•m (80 lbf•**in**)

INSPECTION

ENGINE OIL PRESSURE

Oil Pressure Test Requirement

Bring engine to its normal operating temperature.

CAUTION Certain components in the engine compartment may be very hot. Direct contact may result in skin burn.

NOTICE When watercraft is out of water:

- Never run engine without supplying water to the exhaust system.
- Never run engine longer than 2 minutes. Drive line seal has no cooling when watercraft is out of water.

Required Tools for Oil Pressure Test

REQUIRED TOOLS	
PRESSURE GAUGE (P/N 529 035 709)	
ADAPTER HOSE (P/N 529 035 652)	

NOTE: A 1/8 NPT pipe extension may ease the installation.

Oil Pressure Specifications

Use the following table to compare the oil pressure at different RPM.

OIL PRESSURE	
Idle (cold)	448 kPa - 648 kPa (65 PSI - 94 PSI) for a very short time
Idle (at 80°C (176°F))	Min. 228 kPa (33 PSI)
4000 - 7500	400 kPa - 496 kPa (58 PSI - 72 PSI)

Test at the Oil Pressure Switch Location

Remove oil pressure switch and install gauge.

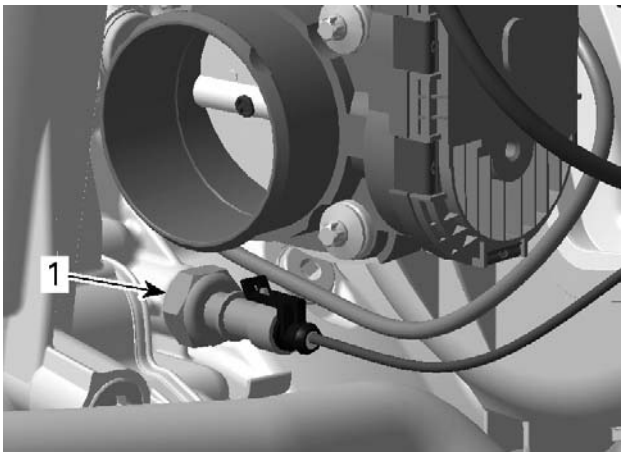

smr2009-023-005_a

INSTALLATION AT PRESSURE SWITCH LOCATION
1. Remove oil pressure switch and install gauge here

To prevent the EMS to go in limp home mode (at 2500 RPM) or to generate a fault code, do the following:

1. Ground OPS to engine.
2. Plug OPS to harness.
3. Start engine.
4. While engine is running, unplug OPS from harness.

Read oil pressure at different RPM as per table above.

Reinstall oil pressure switch.

Test at the Cylinder Head Location

The oil pressure may be measured from cylinder head if desired.

Remove plug located on cylinder head and install gauge.

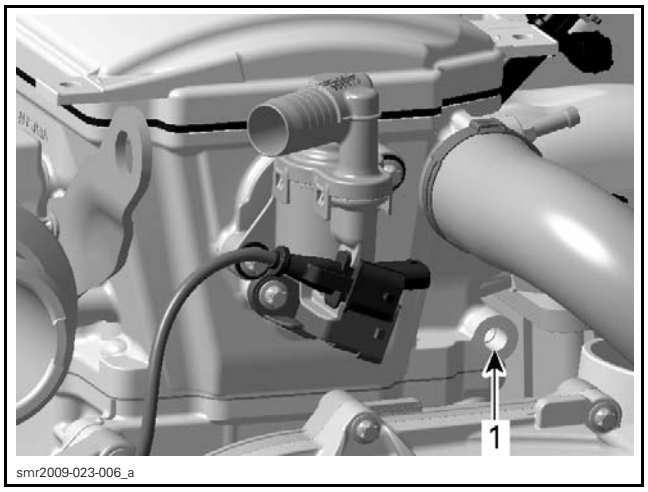

INSTALLATION AT CYLINDER HEAD
1. Remove plug and install gauge here

Start engine and read pressure at different RPM as per table above.

Reinstall plug.

TROUBLESHOOTING

The following is provided to help in diagnosing the probable source of troubles. It is a guideline and it should not be assumed to list all possible problems.

Always check for fault codes. If a fault code is detected, service the fault code first. Refer to *ENGINE MANAGEMENT* section.

LOW OR NO ENGINE OIL PRESSURE

1. Oil level too low.
   - *Refill engine oil.*
   - *Check for high oil consumption. See below.*
   - *Check for oil leaks (oil leaking out of leak indicator hole, gaskets, oil seal or O-rings). Repair or replace.*
2. Oil pressure switch defective.
   - *Check and replace if necessary.*
3. Oil filter clogged.
   - *Replace engine oil and oil filter at the same time.*
4. Oil pressure regulator valve sticks open, or spring load is too small.
   - *Clean oil regulator piston and its bore. Replace if necessary.*
   - *Measure spring free length. Replace if too small.*
5. Oil pump(s) worn or damaged.
   - *Check oil pump rotors and its bore for wear limits. Replace if out of specification.*
6. Engine oil strainers are clogged.
   - *Remove and clean engine oil strainers.*
7. Heavy wear on plain bearings.
   - *Check radial clearance of plain bearings. Replace if out of specification.*

HIGH OIL CONSUMPTION

1. Oil in breathing system.
   - *Check if breather V-ring is brittle, hard or damaged. Replace V-ring.*
2. Valve stem seals worn or damaged.
   - *Replace valve stem seals.*
3. Piston rings worn out (blue colored exhaust smoke).
   - *Replace piston rings.*

OIL CONTAMINATION (WHITE APPEARANCE)

1. Water ingestion through drive shaft and floating ring
   - *Check if water is leaking between drive shaft and floating ring. Repair or replace defective parts. Refer to PTO HOUSING AND MAGNETO subsection.*
   - *Change engine oil and filter.*
2. Oil seal and rotary seal on water pump shaft leaking.
   - *Replace oil seal and water pump shaft assembly.*
   - *Change engine oil and oil filter.*
3. Cylinder head gasket leaking.
   - *Replace cylinder head gasket and tighten cylinder head with recommended torque.*
   - *Change engine oil and oil filter.*
4. Cylinder head screws not properly tightened.
   - *Retighten screws with recommended torque.*
   - *Change engine oil.*
5. Oil cooler O-rings are leaking.
   - *Replace O-rings.*
   - *Change engine oil and oil filter.*
6. Cylinder block or cylinder head casting is leaking.
   - *Check for internal cracks in casting. Replace damaged components.*
   - *Change engine oil and oil filter.*

PROCEDURES

OIL PRESSURE SWITCH (OPS)

Oil Pressure Switch Operation

The switch threshold value to send a signal of low oil pressure may vary from a minimum of 180 kPa (26 PSI) to a maximum of 220 kPa (32 PSI).

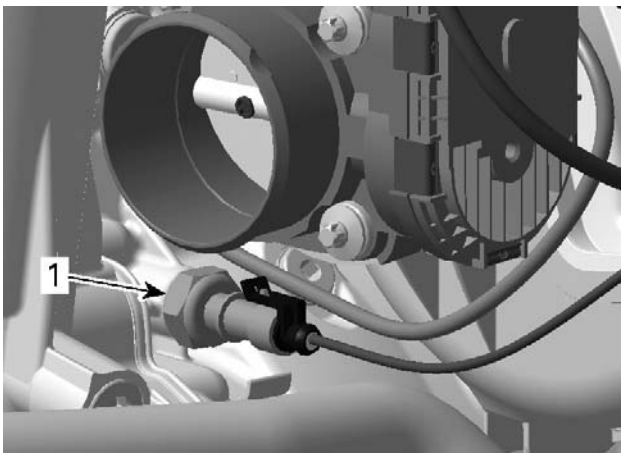

smr2009-023-005_a

1. OPS

Inspecting the Oil Pressure Switch

First, carefully check the condition of the connector terminals. Clean to remove dirt and corrosion that could affect proper operation of the OPS.

IMPORTANT: Do not apply dielectric grease on terminal.

Before checking the function of the OPS, an oil pressure test has to be performed to be sure the oil pressure is not in fault. Refer to *INSPECTION* in this subsection.

When the engine oil pressure tests good but the OIL message in the information center is present and the beeper sounds:

– Ensure OPS connector is plugged to the switch.
– Check the resistance of the OPS while engine is off and while engine is running.

Testing the Resistance of the Oil Pressure Switch

Disconnect the connector from the OPS.

Use a multimeter to check the resistance as shown.

ENGINE NOT RUNNING		
TEST PROBES		RESISTANCE (Ω)
OPS connector (pin 1)	Engine ground	Close to 0 (normally closed switch)

ENGINE RUNNING		
TEST PROBES		RESISTANCE (Ω)
OPS connector (pin 1)	Engine ground	Infinitely high (OL) when pressure reaches 180 kPa (26.11 PSI) and 220 kPa (32 PSI)

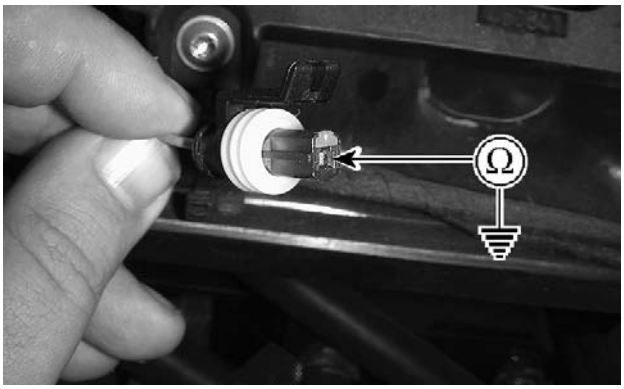

smr2009-023-102_a

If resistance values are incorrect, replace OPS.

If the values are correct, check the continuity of the wiring harness.

Testing the Continuity of the Oil Pressure Switch Circuit

Disconnect the ECM connector "A" from the ECM.

Check continuity of OPS circuit as per following table.

REQUIRED TOOL	
ECM ADAPTER TOOL (P/N 529 036 166)	
FLUKE 115 MULTIMETER (P/N 529 035 868)	

OPS CONNECTOR	ECM ADAPTER	RESISTANCE
Pin 1	Pin E3	Close to 0 Ω (continuity)

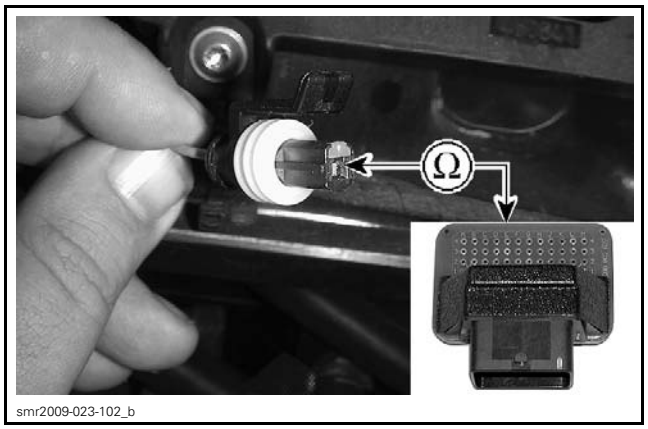

If continuity test failed, repair or replace the connector and wiring between ECM connector and OPS.

If continuity test succeeded, check the ECM. Refer to *ELECTRONIC FUEL INJECTION (EFI)* subsection.

Removing the Oil Pressure Switch

155 Engine (Models with Suspension and Supercharged Engines)

Remove the throttle body. Refer to *ELECTRONIC FUEL INJECTION (EFI)* subsection.

All Models

Unplug the OPS connector.

Unscrew and remove the oil pressure switch.

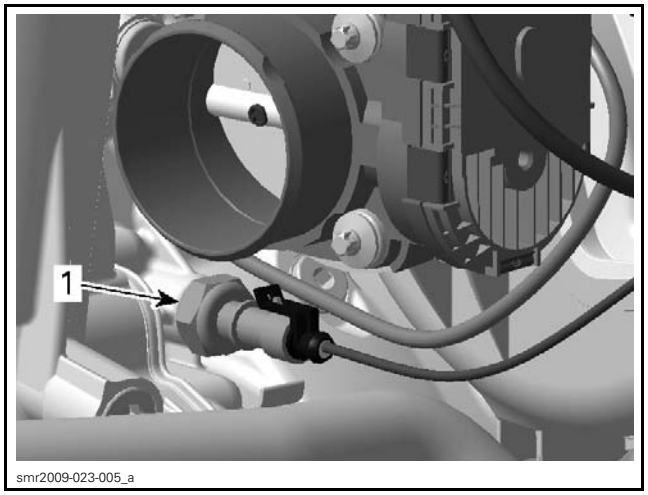

1. OPS

Installing the Oil Pressure Switch

Apply LOCTITE 243 (BLUE) (P/N 293 800 060) on threads of oil pressure switch.

Torque oil pressure switch to specification.

TIGHTENING TORQUE	
Oil pressure switch	9 N•m (80 lbf•**in**)

PTO OIL STRAINER

Removing the PTO Oil Strainer

Remove engine oil. See procedure in *OIL CHANGE* in this subsection.

Remove the PTO housing. Refer to *PTO HOUSING AND MAGNETO* subsection.

Remove the oil strainer.

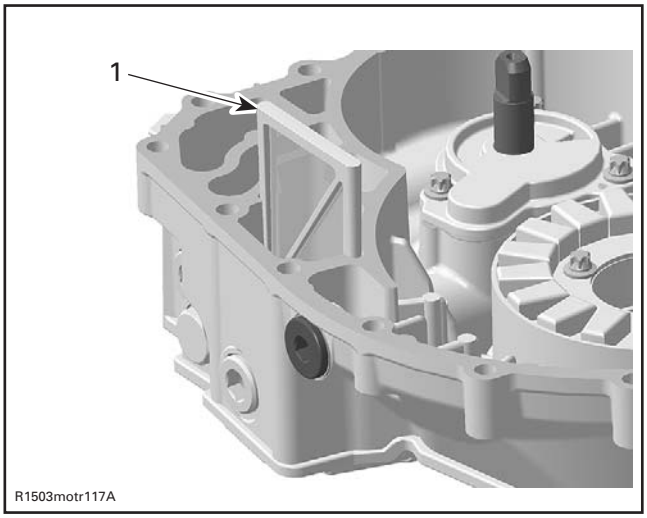

1. PTO oil strainer

Cleaning and Inspecting the PTO Oil Strainer

Clean oil strainer with a part cleaner then use compressed air to dry it.

Check and clean the oil outlet area for dirt and other contaminations.

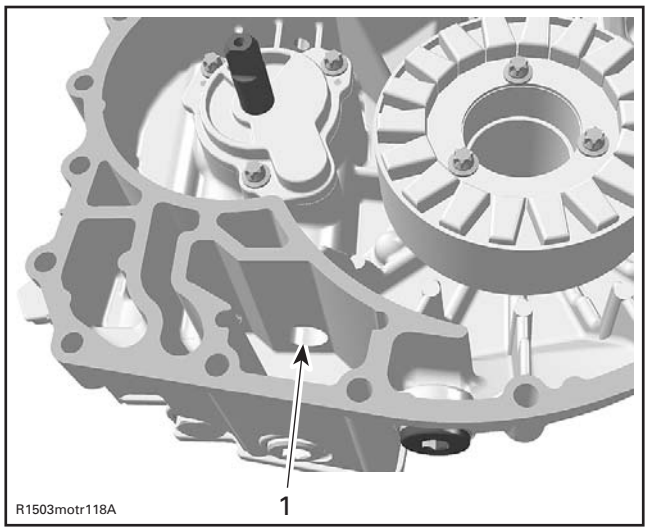

1. Oil inlet to the oil pump

Installing the PTO Oil Strainer

For installation, reverse the removal procedure. However, pay attention to the following.

Clean cylinder block to remove all remaining silicone residues in oil strainer area.

Apply a thin layer of LOCTITE 5910 (P/N 293 800 081) on oil strainer side.

Install it in the PTO housing.

Install the PTO housing using the procedure described in the *PTO HOUSING AND MAGNETO* subsection.

Refill engine at the proper level with the recommended oil. Refer to *ENGINE OIL* for the procedure.

ENGINE OIL PRESSURE REGULATOR

The oil pressure regulator is located on the bottom of the PTO housing.

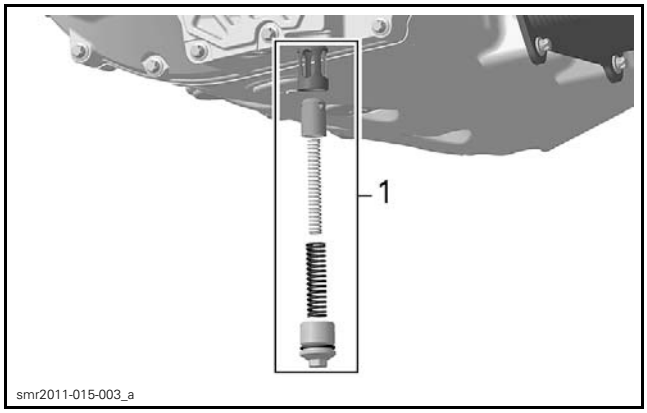

TYPICAL
1. Oil pressure regulator

NOTE: The oil pressure regulator system opens when the oil pressure exceeds 400 kPa (58 PSI).

Removing the Oil Pressure Regulator

Remove engine oil. See procedure in *OIL CHANGE* in this subsection.

Remove:
- Oil pressure regulator plug
- Compression springs
- Valve piston
- Valve piston guide.

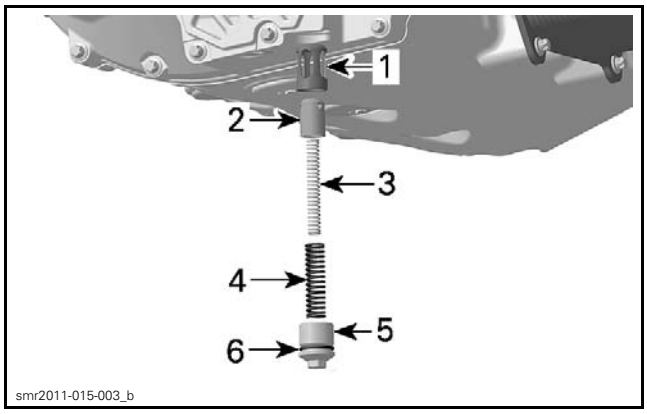

TYPICAL
1. Valve piston guide
2. Valve piston
3. Inner compression spring
4. Outer compression spring
5. Oil pressure regulator plug
6. O-ring

NOTE: Oil pressure regulator plug on oil pump housing is spring loaded.

Inspecting the Oil Pressure Regulator

Inspect valve piston and valve piston guide for scoring or other damages.

Check outer compression spring for free length.

OUTER COMPRESSION SPRING FREE LENGTH	
NEW NOMINAL	60 mm (2.362 in)
SERVICE LIMIT	57 mm (2.244 in)

Replace inner and outer compression spring as an assembly.

Replace parts if important wear or damage are present.

Clean bore and threads in the PTO housing from metal shavings and other contaminations.

Installing the Oil Pressure Regulator

For installation, reverse the removal procedure. However, pay attention to the following details.

Be careful that the O-ring on plug screw is in place.

Apply LOCTITE 243 (BLUE) (P/N 293 800 060) on threads of the oil pressure regulator plug.

Torque plug screw to specification.

NOTICE **Make sure not over tighten the plug. Damages to springs may cause oil pressure regulator malfunction.**

TIGHTENING TORQUE	
Oil pressure regulator plug	13 N•m (115 lbf•**in**)

OIL PRESSURE PUMP

The oil pressure pump is located in the PTO housing and is driven by the balance shaft.

Removing the Oil Pressure Pump

1. Remove engine oil. See procedure in *OIL CHANGE* in this subsection.
2. Remove the PTO housing. Refer to *PTO HOUSING AND MAGNETO* subsection.
3. Remove water pump housing and the impeller. Refer to *COOLING SYSTEM* subsection.
4. Remove screws securing the oil pump cover.

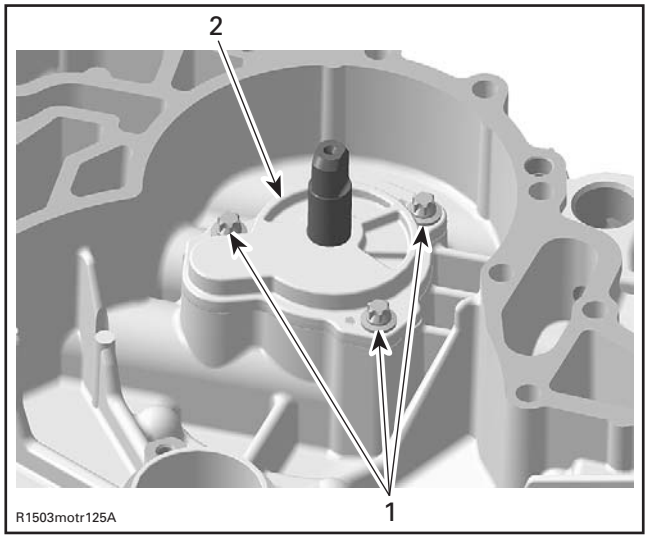

1. Screws
2. Oil pump cover

5. Pull and remove the outer oil pump rotor.

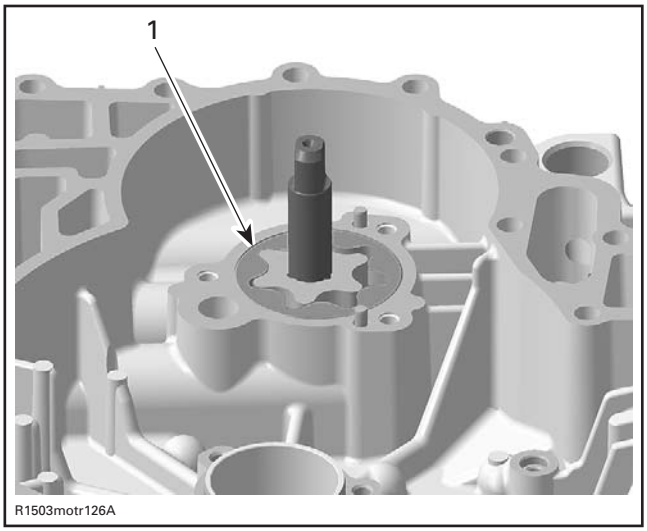

1. Outer oil pump rotor

6. Extract the coolant/oil pump shaft from outside PTO housing cover with a pusher.

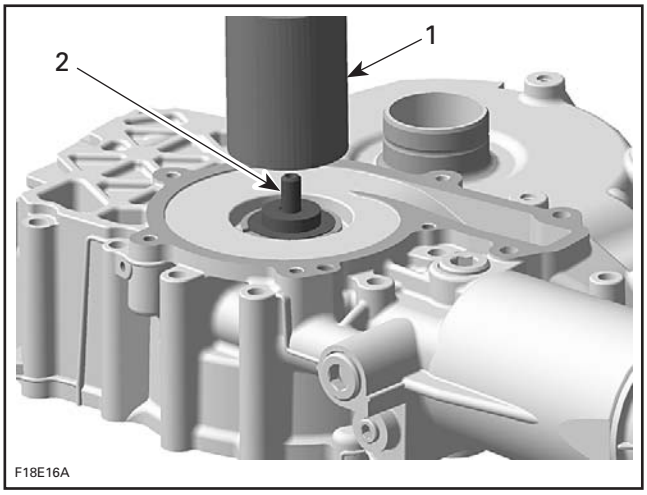

1. Pusher
2. Coolant/oil pump shaft

7. Remove rotary seal and oil seal. Refer to *ROTARY SEAL* further in this subsection.

Inspecting the Oil Pressure Pump

Inspect coolant/oil pump shaft, housing and cover for marks or other damages.

Check inner rotor for corrosion pin-holes or other damages. If so, replace coolant/oil pump shaft. Ensure to also check oil pump housing and cover and replace if damaged.

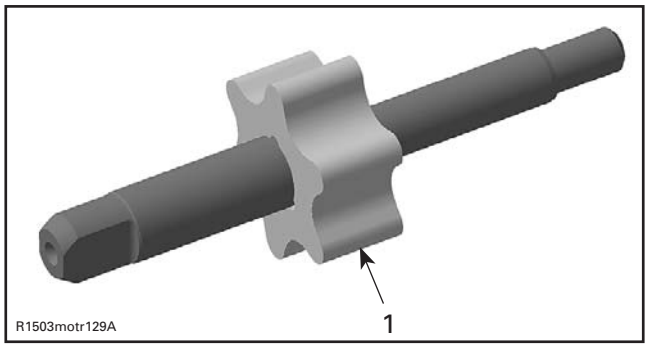

1. Pittings on the teeth

Using a feeler gauge, measure the clearance between inner and outer rotors.

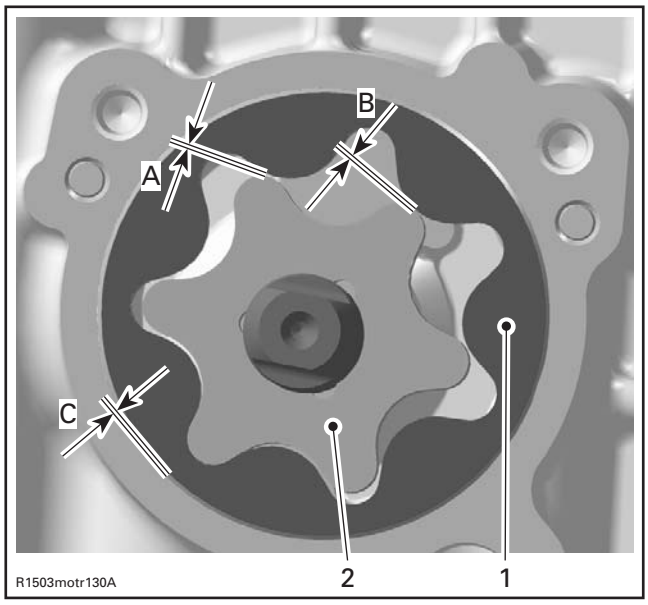

1. Outer rotor
2. Inner rotor

OUTER AND INNER ROTOR CLEARANCE	
SERVICE LIMIT	
A	0.25 mm (.0098 in)
B	
C	

If clearance between inner and outer rotors exceeds the tolerance, replace coolant/oil pump shaft. Ensure to also check oil pump housing and cover and replace if damaged.

If clearance between outer rotor and its bore in oil pump exceeds the tolerance, replace the complete oil pump and the PTO housing.

Using a vernier depth gauge, measure side wear as shown.

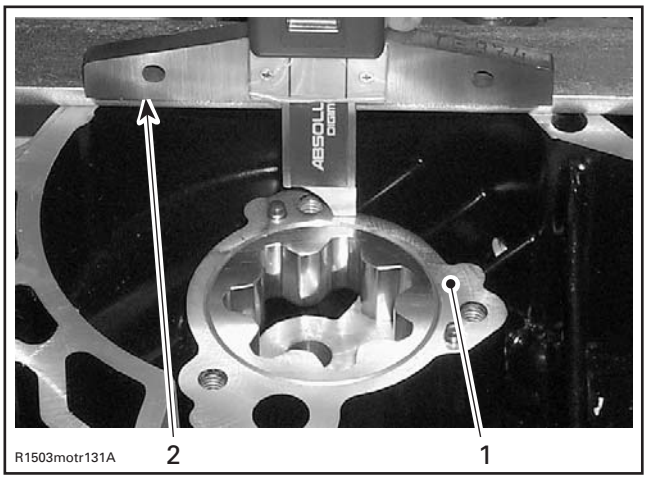

1. PTO housing surface
2. Vernier depth gauge

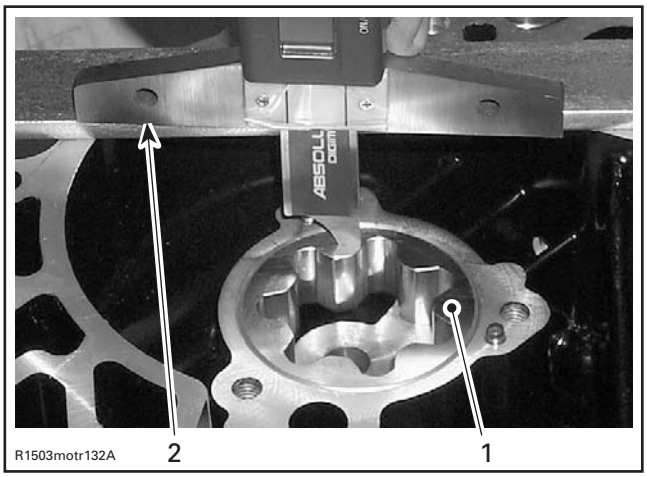

1. Oil pump outer rotor surface
2. Vernier depth gage

Clearance between pump housing and outer rotor should not exceed the following specification. If so, replace the complete oil pump assembly.

CLEARANCE BETWEEN PUMP HOUSING AND OUTER ROTOR
0.1 mm (.004 in)

NOTE: When the axial clearance of the coolant/oil pump shaft increases, the oil pressure decreases.

Check the inside of oil pump housing and its cover for scoring or other damages and replace if damaged.

Installing the Oil Pressure Pump

For installation, reverse the removal procedure. Pay attention to the following details.

Install a NEW rotary seal and a NEW oil seal. Refer to *ROTARY SEAL* in this subsection.

Install the coolant/oil pump shaft.

NOTICE Never use a hammer for the coolant/oil pump shaft installation. Only use a press to avoid damaging the ceramic component of the rotary seal.

REQUIRED TOOL	
OIL SEAL GUIDE (P/N 529 035 822)	
WATER PUMP SEAL PUSHER (P/N 529 035 823)	

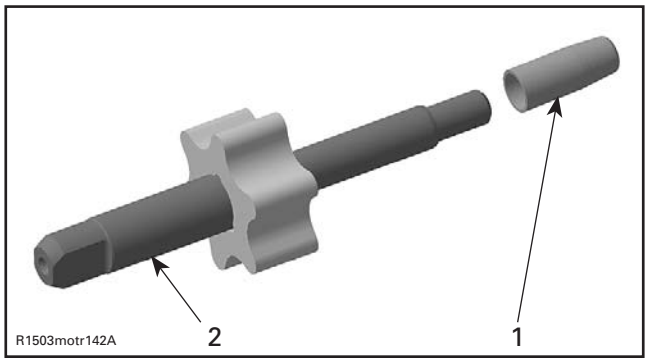

1. *Oil seal guide*
2. *Coolant/oil pump shaft*

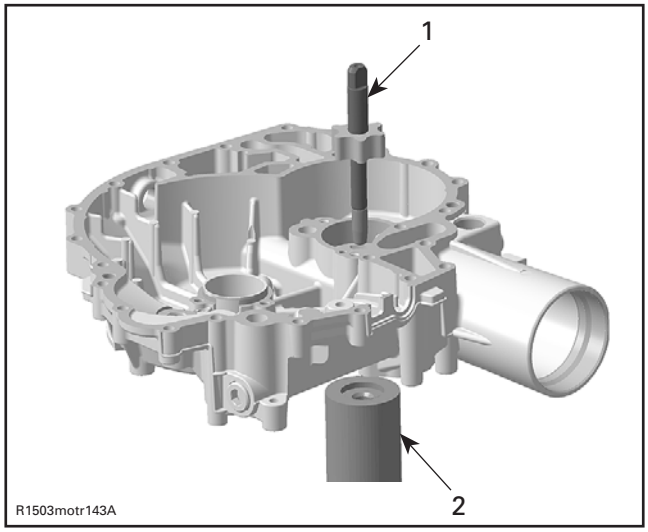

1. *Coolant/oil pump shaft with oil seal guide*
2. *Rotary seal pusher to support PTO housing*

Apply LOCTITE 243 (BLUE) (P/N 293 800 060) on threads of oil pump cover screws.

Tighten oil pump cover screws and torque to specification.

TIGHTENING TORQUE	
Oil pump cover screws	9 N•m (80 lbf•**in**)

After engine is completely reassembled, start engine and make sure oil pressure is within specifications.

ROTARY SEAL

Removing the Rotary Seal

Remove the coolant/oil pump shaft. Refer to *OIL PRESSURE PUMP* in this subsection.

Carefully remove the inner ring of the rotary seal with a screwdriver.

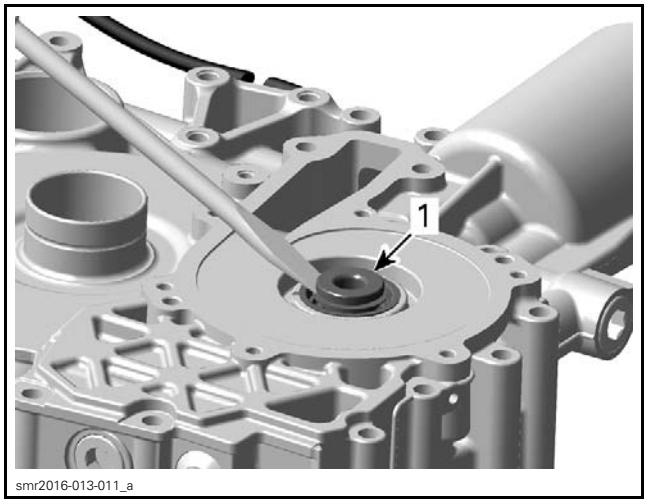

1. *Inner ring of rotary seal*

NOTICE Be careful not to damage the surface of the rotary seal bore or the sealing surface of the water pump housing in PTO housing.

REQUIRED TOOL	
CERAMIC SEAL PULLER (P/N 529 036 365)	

Put ceramic seal puller into the ceramic seal and turn the bearing puller until it's clamping.

If you bought this manual from any other seller please leave them NEGATIVE feedback and notify me at bestshopmanuals@gmail.com

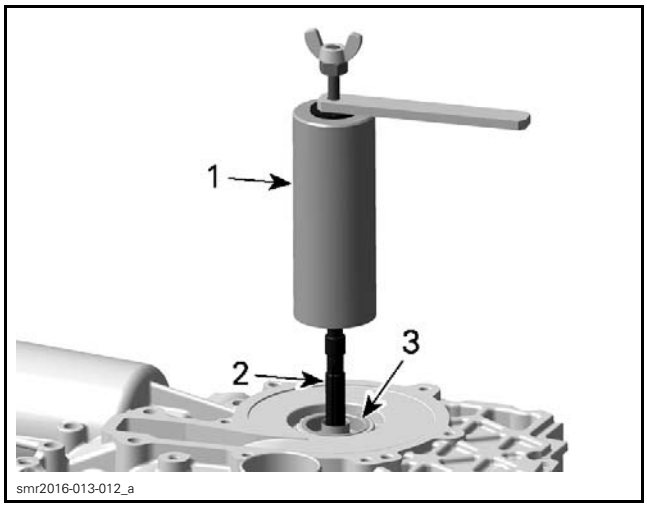

1. *Ceramic seal puller*
2. *Bearing puller*
3. *Ceramic seal*

NOTE: Take care that the bearing puller end is exactly positioned between the oil seal and the ceramic seal.

Start turning the lever clockwise until the ceramic seal is completely pulled out the PTO housing.

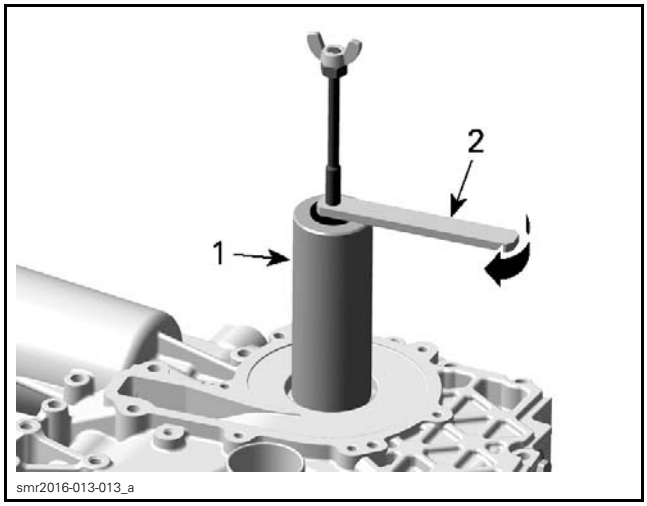

1. *Ceramic seal puller*
2. *Bearing puller lever*

Remove ceramic seal from bearing puller and discard it.

Remove oil seal behind the rotary seal.

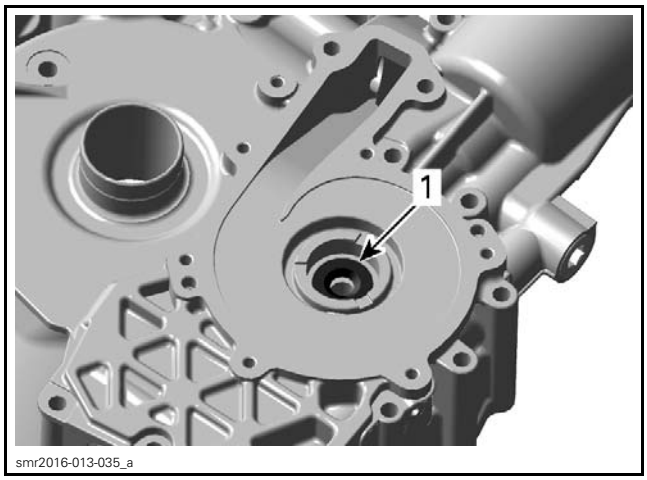

1. *Oil seal*

Discard rotary seal and oil seal.

Installing the Rotary Seal

The installation is the opposite of the removal procedure. Pay attention to the following details.

NOTE: Never use oil in the press fit area of the oil seal and rotary seal.

Install NEW oil seal.

REQUIRED TOOL	
OIL SEAL PUSHER (P/N 529 035 757)	
HANDLE (P/N 420 877 650)	

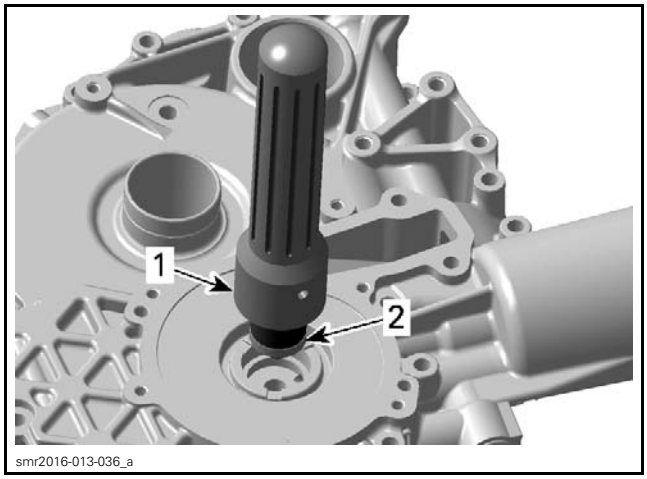

1. *Handle with oil seal pusher*
2. *Oil seal*

Install the NEW rotary seal.

REQUIRED TOOL	
WATER PUMP SEAL PUSHER (P/N 529 035 823)	

NOTICE Never use a hammer for the rotary seal installation. Only use a press to avoid damaging the ceramic component.

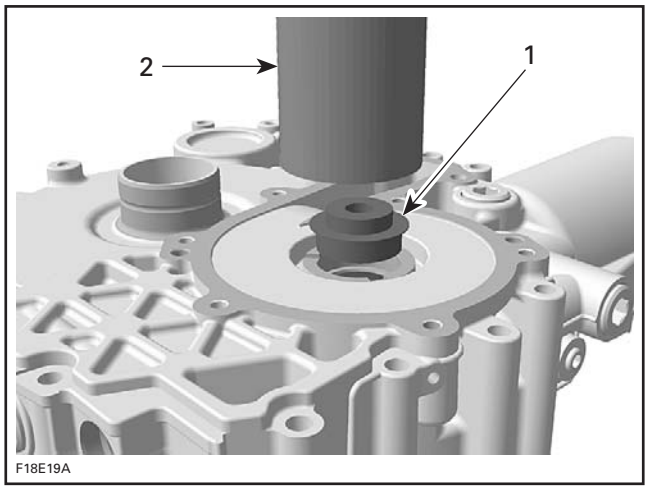

1. *Rotary seal*
2. *Rotary seal installer*

Install the coolant/oil pump shaft. Refer to *OIL PRESSURE PUMP* in this subsection.

OIL SUCTION PUMP

The oil suction pump is located on the front side of the engine inside of the oil suction pump housing at the bottom of the oil filler tube.

Removing the Oil Suction Pump

Models with Suspension

1. Remove jet pump and drive shaft. Refer to *STEERING AND PROPULSION* section.
2. Remove the moving deck. Refer to *BODY (GTX, RXT AND WAKE PRO SERIES)* subsection.
3. Remove the air intake silencer. Refer to *AIR INTAKE SYSTEM (MODELS WITH SUSPENSION)* subsection.
4. Detach the muffler from the exhaust manifold and move muffler backwards. Refer to *EXHAUST SYSTEM* subsection.
5. Remove engine support mount screws.
6. Move engine backwards, just enough to reach oil suction pump cover screws.

All Models

1. Remove retaining screws from oil filler tube.

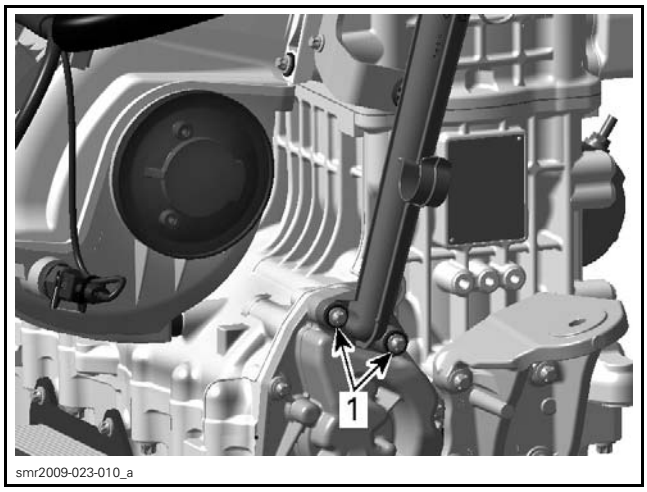

1. *Oil filler tube screws*

2. Remove oil filler tube.
3. Remove retaining screws.

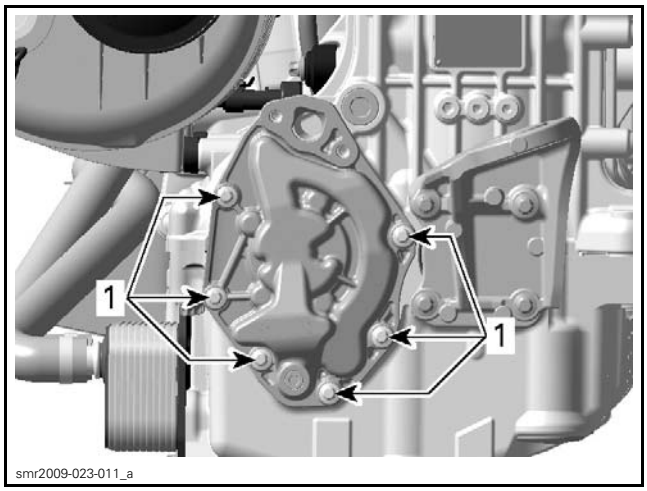

1. *Suction pump cover screws*

4. Place rags under cover to prevent spillage. If spillage occurs, clean with the PULLEY FLANGE CLEANER (P/N 413 711 809).
5. Remove the oil suction pump housing.
6. Remove oil pump screws and cover.

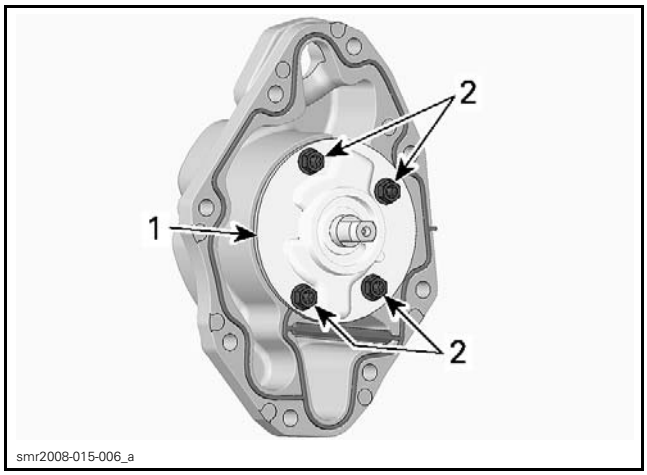

TYPICAL
1. *Oil pump cover*
2. *Oil pump screws*

7. Remove oil pump shaft.
8. Remove outer rotor.

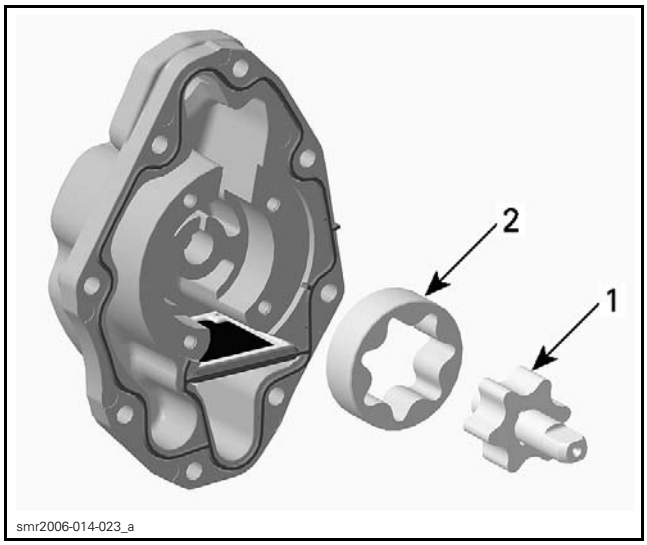

TYPICAL
1. *Oil pump shaft*
2. *Outer rotor*

9. Remove oil strainer and cover gasket.

Inspecting the Oil Suction Pump

Inspect oil pump shaft, housing and cover for marks or other damages.

Check inner rotor for corrosion, pin-holes or other damages. If so, replace oil pump shaft. Ensure to also check oil pump housing and cover and replace if damaged.

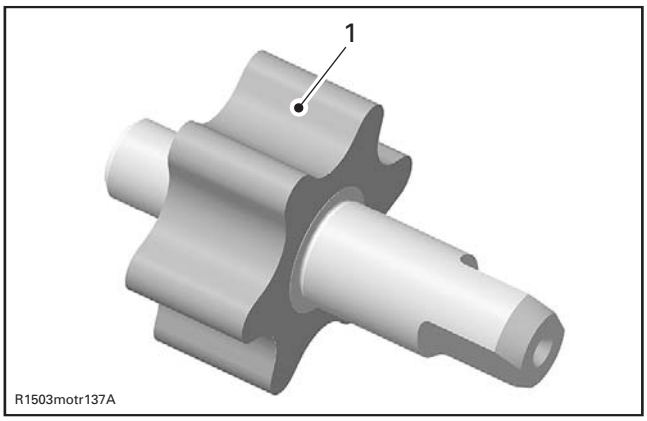

1. *Pittings on the teeth*

Using a feeler gauge, measure the clearance between inner and outer rotors.

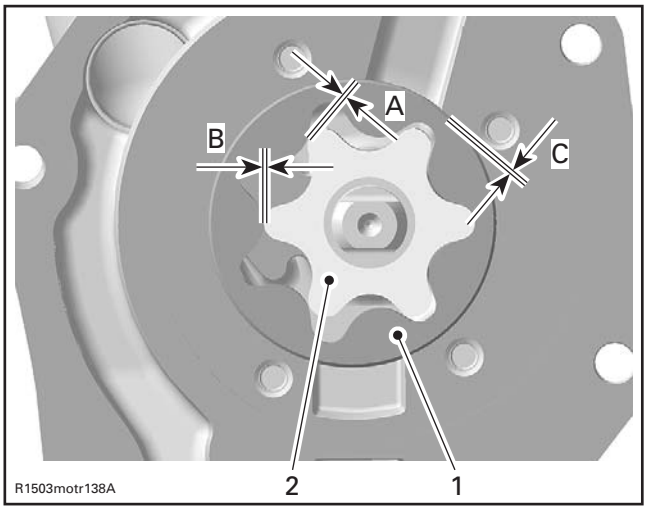

1. *Outer rotor*
2. *Inner rotor*

OUTER AND INNER ROTOR CLEARANCE	
SERVICE LIMIT	
A	0.25 mm (.0098 in)
B	
C	

If clearance between inner and outer rotors exceeds the tolerance, replace oil pump shaft. Ensure to also check oil pump housing and cover and replace if damaged.

If clearance between outer rotor and its bore in oil pump exceeds the tolerance, replace the complete oil pump and the PTO housing.

Using a vernier depth gage, measure side wear as shown.

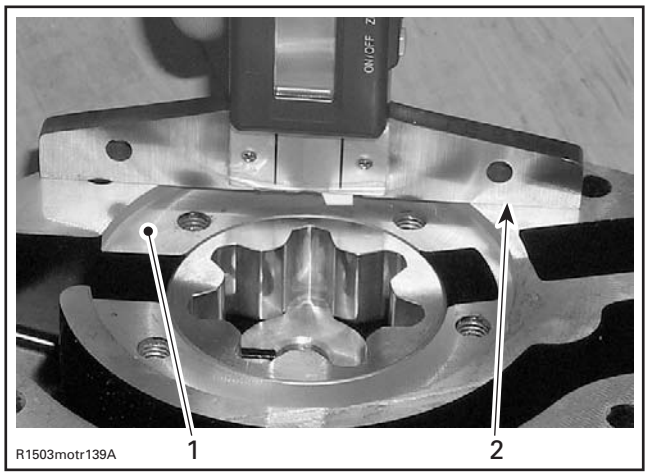

1. *Oil pump housing surface*
2. *Vernier depth gage*

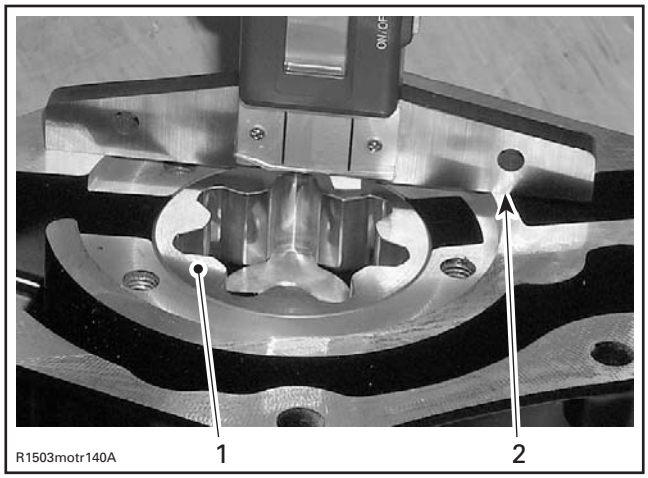

1. *Oil pump outer rotor surface*
2. *Vernier depth gage*

Clearance between pump housing and outer rotor should not exceed the following specification. If so, replace the complete oil pump assembly.

CLEARANCE BETWEEN PUMP HOUSING AND OUTER ROTOR
0.1 mm (.004 in)

NOTE: When the axial clearance of the oil pump shaft assembly increases, the oil pressure decreases.

Check the inside of oil pump housing and its cover for scoring or other damages and replace if damaged.

Inspect rubber ring gaskets.

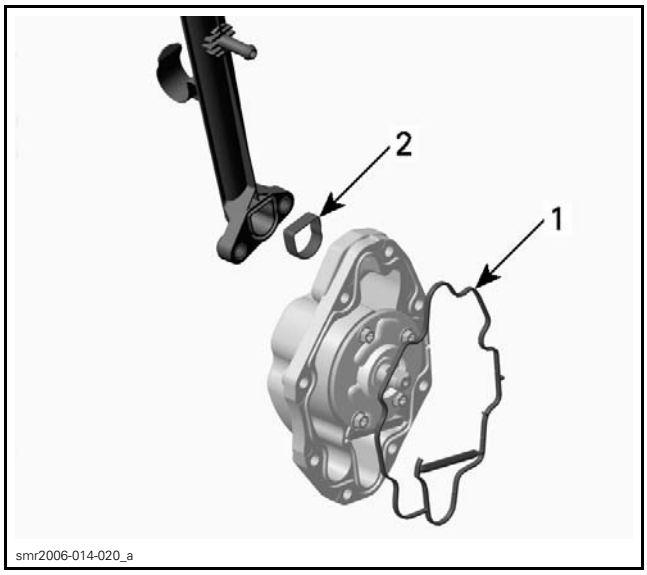

1. *Suction pump cover gasket*
2. *Oil filler tube gasket*

If rubber rings are brittle, cracked or hard, replace them.

Installing the Oil Suction Pump

For installation, reverse the removal procedure. Pay attention to the following details.

Clean both contact surfaces of oil suction pump cover.

Check and clean the oil inlet and outlet area for dirt and other contaminations.

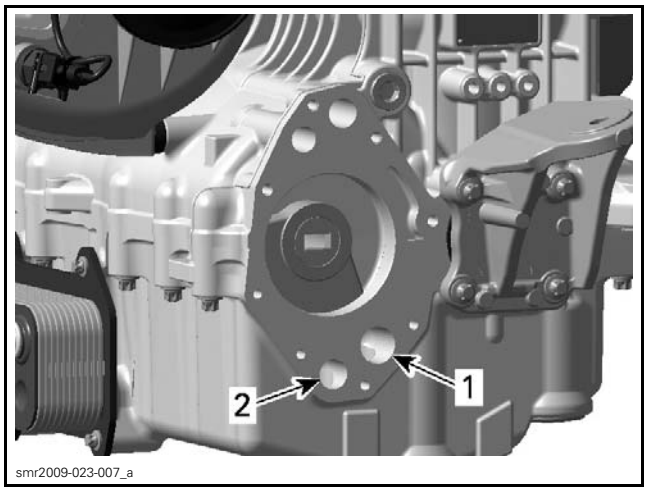

1. *Oil inlet*
2. *Oil outlet*

Make sure oil strainer is properly installed in the oil suction pump cover.

Apply engine oil on both rubber ring gaskets.

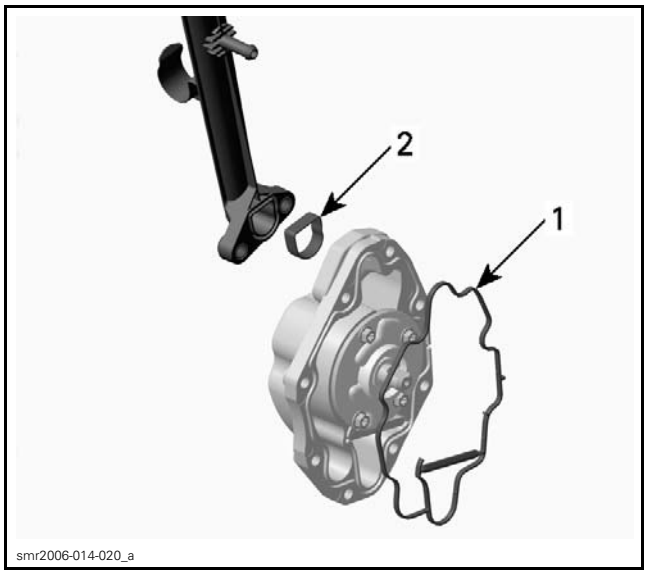

1. *Suction pump cover gasket*
2. *Oil filler tube gasket*

Apply LOCTITE 243 (BLUE) (P/N 293 800 060) on threads of the suction pump cover screws.

Position screws according to their length as shown.

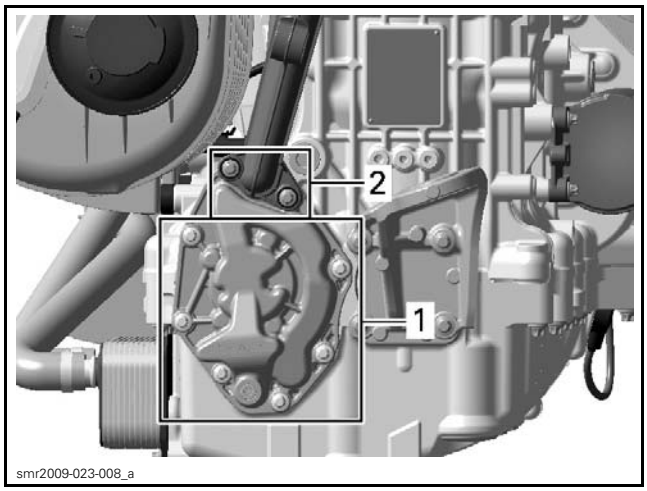

1. *Screws M6 x 25*
2. *Screws M6 x 45*

Tighten suction pump cover screws as per following sequence.

TIGHTENING TORQUE	
Suction pump cover screws	9 N•m (80 lbf•**in**)

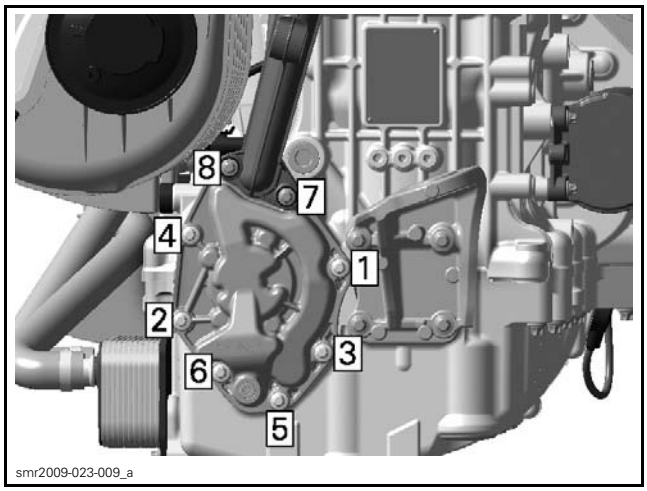

TIGHTENING SEQUENCE

Refer to the appropriate procedures and install all other removed parts.

SUCTION PUMP OIL STRAINER

NOTE: The oil strainer does not need to be cleaned at every oil change. Clean it during other inspections, especially when the engine is disassembled.

Removing the Suction Pump Oil Strainer

Remove the oil suction pump cover as explained in *REMOVING THE OIL SUCTION PUMP*

Remove oil strainer from the suction pump cover.

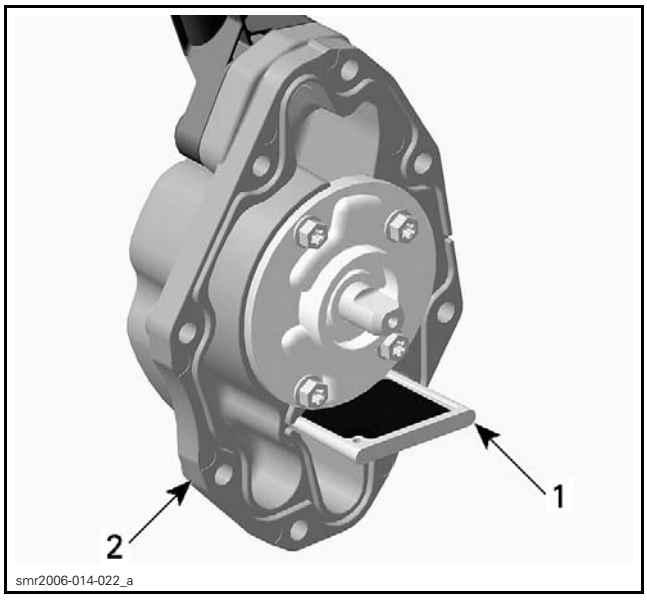

1. *Oil strainer*
2. *Suction pump cover*

Inspecting the Suction Pump Oil Strainer

Clean oil strainer with a part cleaner then use compressed air to dry it.

Check oil strainer for tear or other damages. Replace it if necessary.

Installing the Suction Pump Oil Strainer

For installation of the suction pump cover, refer to *OIL SUCTION PUMP* in this subsection.

SUPERCHARGER OIL SPRAY NOZZLE

Removing the Supercharger Oil Spray Nozzle

Remove the PTO housing. Refer to *PTO HOUSING AND MAGNETO* subsection.

Remove the Torx screw securing the oil spray nozzle support.

Unscrew the Banjo bolt.

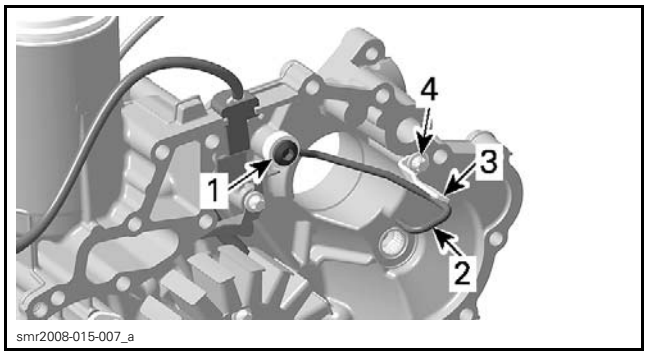

1. *Banjo bolt*
2. *Supercharger oil spray nozzle*
3. *Oil spray nozzle support*
4. *Torx screw*

Inspecting the Supercharger Oil Spray Nozzle

Check oil spray nozzle for:

– Dirt
– Bend
– Other damages.

Replace if necessary.

Installing the Supercharger Oil Spray Nozzle

For installation reverse the removal procedure. However, pay attention to the following.

Apply LOCTITE 243 (BLUE) (P/N 293 800 060) on threads of Torx screw.

Install the oil spray nozzle support.

TIGHTENING TORQUE	
Oil spray nozzle support (Torx screw)	11 N•m (97 lbf•**in**)

Install oil spray nozzle with Banjo bolt.

TIGHTENING TORQUE	
Oil spray nozzle Banjo bolt	19 N•m (168 lbf•**in**)

Adjust the position of the oil spray nozzle.

REQUIRED TOOL	
SUPERCHARGER OIL SPRAY NOZZLE TOOL (P/N 529 036 134)	

The distance between the adjustment tool and oil spray nozzle must be within 1 mm (.039 in).

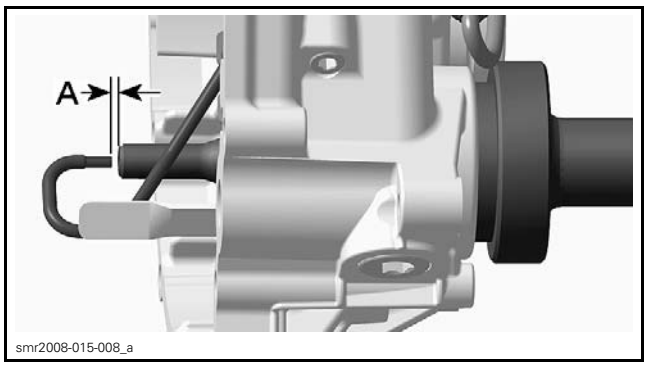

A. 1 mm (.039 in)

NOTE: Make sure that the oil spray nozzle is facing to the center of the tool. Not following this procedure will lead to an insufficient oiling of the supercharger and a supercharger failure can occurs. Adjust the oil spray nozzle if necessary by slightly bending it, take care not to over bend the oil spray nozzle.

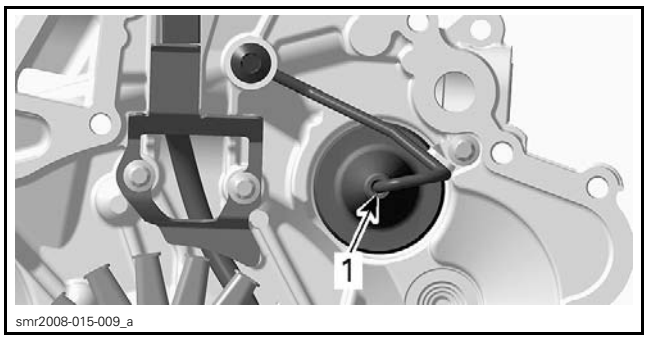

1. *Center of supercharger oil spray nozzle tool*

PISTON OIL SPRAY NOZZLES

The piston oil spray nozzles are located on the upper half of cylinder block.

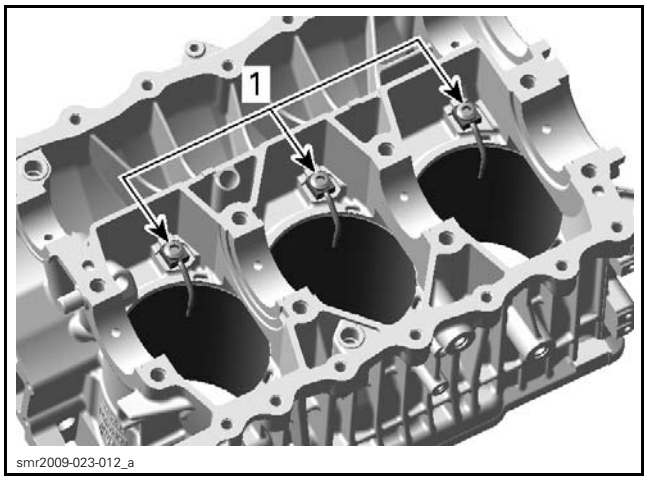

1. Piston oil spray nozzles

NOTE: When the scope of repair work obligates you to split the cylinder block, take this opportunity to clean the oil spray nozzles.

Removing the Piston Oil Spray Nozzle

Remove cylinder block lower half. Refer to *CYLINDER BLOCK* subsection.

Remove oil spray nozzle and Banjo fitting from cylinder block upper half.

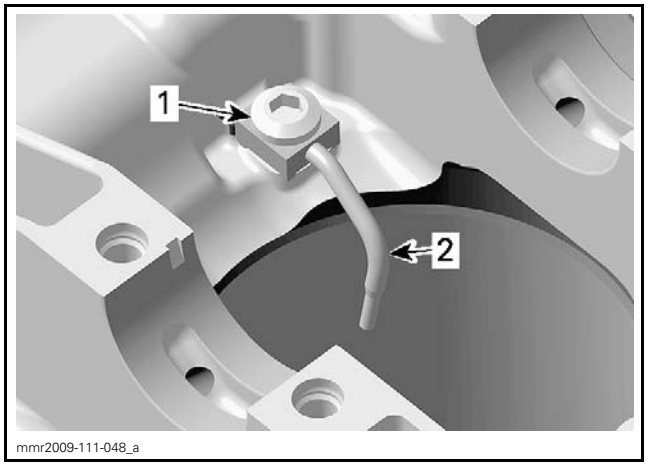

1. Banjo fitting
2. Oil spray nozzle

Cleaning and Inspecting the Piston Oil Spray Nozzle

Clean oil spray nozzle and Banjo fitting from dirt and debris. Use a part cleaner, then compressed air and dry the parts.

Check if ball inside Banjo fitting moves freely.

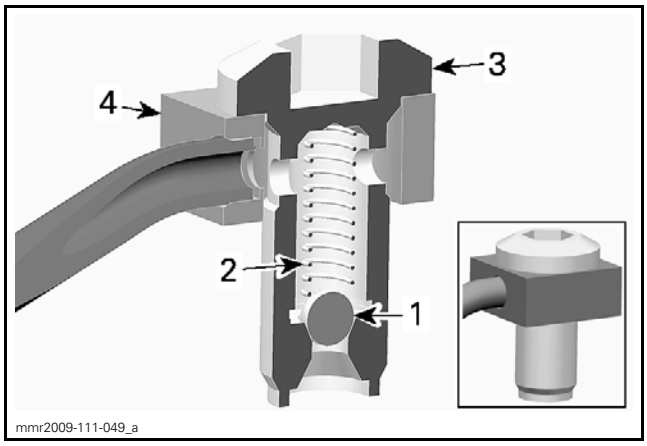

1. Ball
2. Spring
3. Banjo fitting
4. Oil spray nozzle

NOTE: If the oil spray nozzle is damaged or bent during work in the cylinder block, it must be replaced immediately.

Installing the Piston Oil Spray Nozzle

NOTICE **At assembly make sure the contact surface of the oil spray nozzle is well fitted onto the cylinder block. If this is not ensured, the oil spray direction will change, causing potential engine damage.**

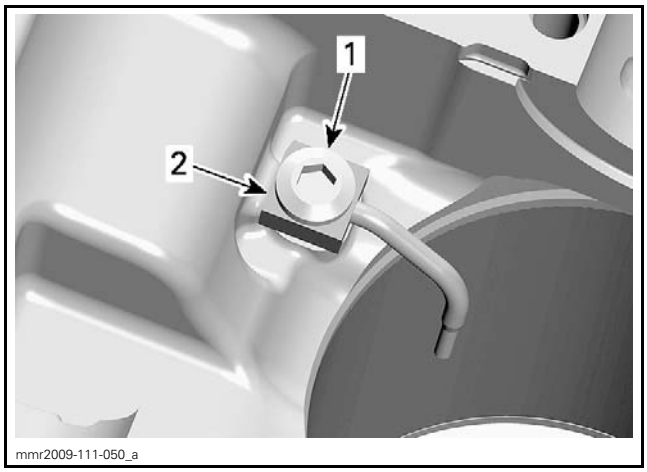

1. Oil spray nozzle
2. Contact surface

OIL SEPARATOR COVER

Removing the Oil Separator Cover

1. Remove the blow-by valve. See procedure in this subsection.
2. Remove camshaft position sensor.

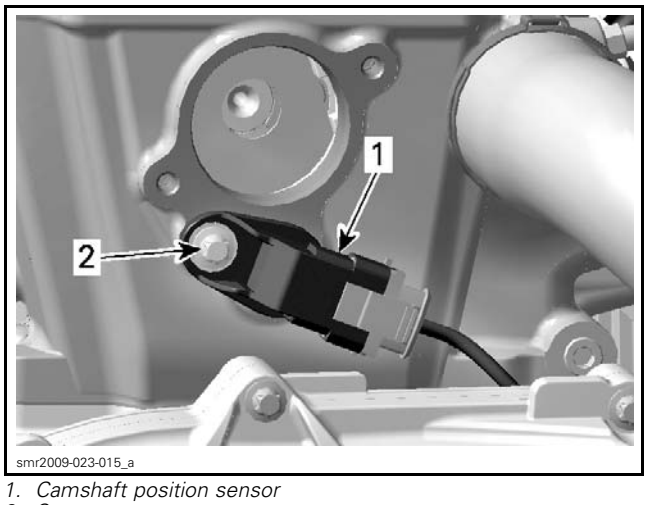

1. *Camshaft position sensor*
2. *Screw*

3. Remove cylinder head cover, refer to *CYLINDER HEAD* subsection.
4. Remove thrust washer from oil separator cover.

NOTE: Make sure not to loose thrust washer when removing it from oil separator cover, otherwise thrust washer would fall into the PTO housing.

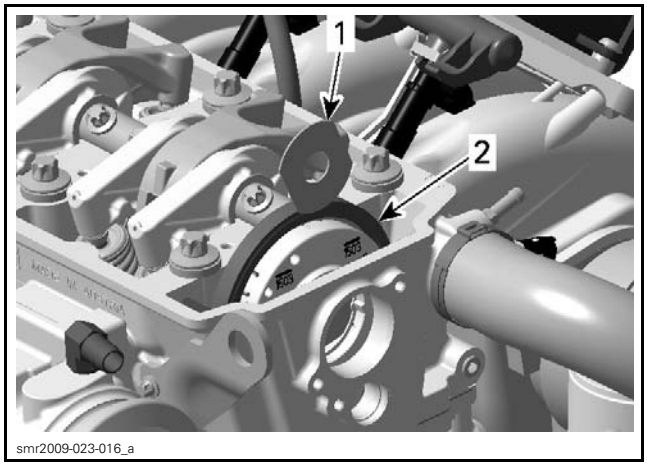

1. *Thrust washer*
2. *Oil separator cover*

5. Remove spark plug tube.
6. Remove rocker arm shaft together with rocker arms, refer to *CYLINDER HEAD* subsection.
7. Remove chain guide and camshaft guide.

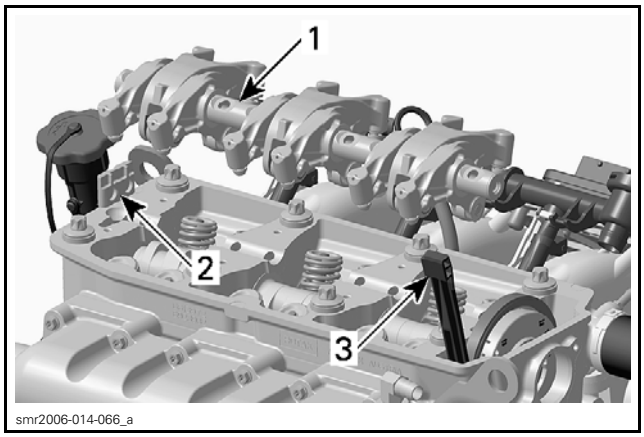

1. *Rocker arm*
2. *Camshaft guide*
3. *Chain guide*

8. Move camshaft backwards as far as possible.
9. Remove oil separator cover from timing gear by releasing the holding clips.

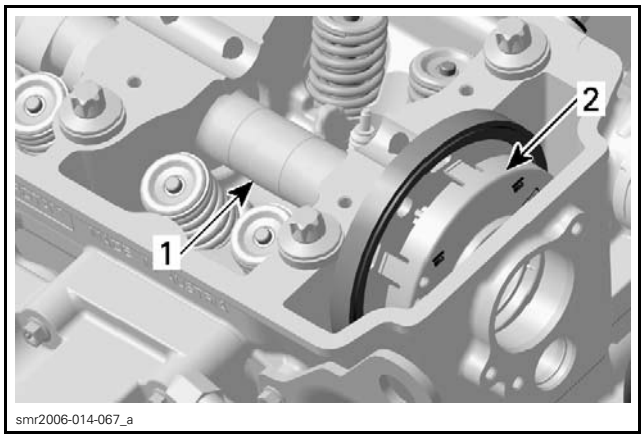

1. *Camshaft*
2. *Oil separator cover*

NOTE: Be careful not to break the holding clips from oil separator cover when its removed from the timing gear.

Inspecting the Oil Separator Cover

Inspect oil separator cover for marks or other damages. Ensure to check also the holding clips of oil separator cover and for thrust washer. If any damage is visible replace oil separator cover.

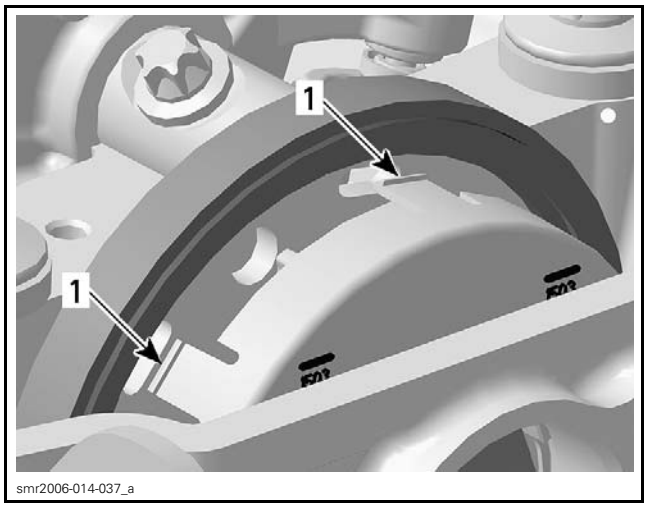

1. Holding clips

Installing the Oil Separator Cover

For installation, reverse the removal procedure. Pay attention to the following details.

Properly install oil separator cover and thrust washer. They need to be in a perfect even position with timing gear.

NOTE: Make sure not to lose thrust washer when installed on oil separator cover.

For installation of rocker arm shaft with rocker arms, follow the procedure as it is described in *CYLINDER HEAD* subsection.

Install all other removed parts.

BLOW-BY VALVE

Blow-By Valve Description

The function of the blow-by valve is the circulation of the oil vapors.

Blow-By Valve Operation

Normal Operation

During its normal operation, the blow-by valve allows crankcase vapors to return in the intake system where they are harmlessly burned.

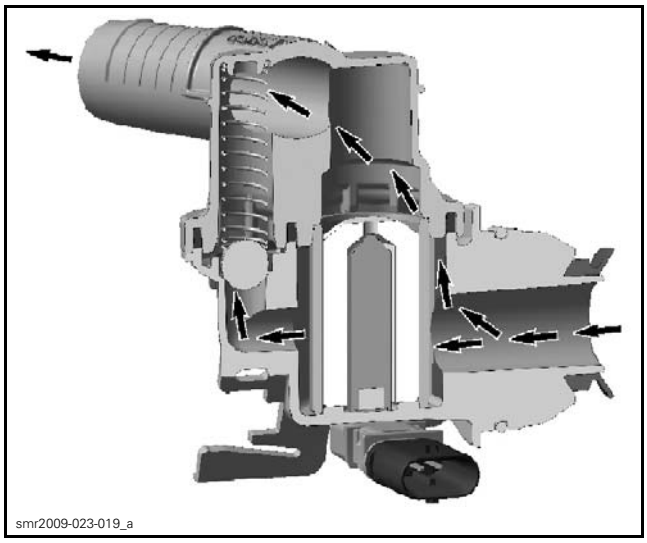

NORMAL OPERATION

By-Pass Function

If, for any reason, the valve piston gets stuck at normal operation and the crankcase pressure exceeds 40 kPa (6 PSI), the pressure unseats a check ball and crankcase vapors can bypass the valve piston.

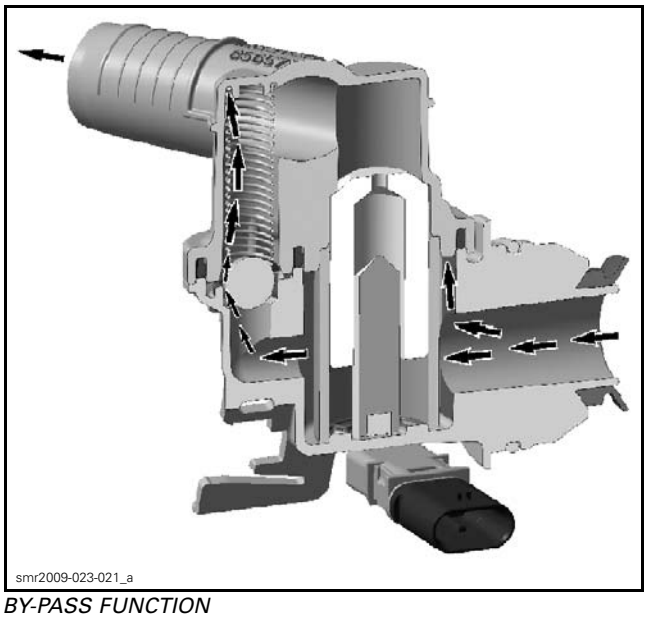

BY-PASS FUNCTION

Removing the Blow-By Valve

Models with Suspension

Remove:

– Deck extension, refer to *BODY (GTX, RXT AND WAKE PRO SERIES)* subsection
– Air intake silencer, refer to *AIR INTAKE SYSTEM (MODELS WITH SUSPENSION)* subsection.

All Models

Remove ventilation hose from blow-by valve.

Remove the CPS connector from its support on blow-by valve.

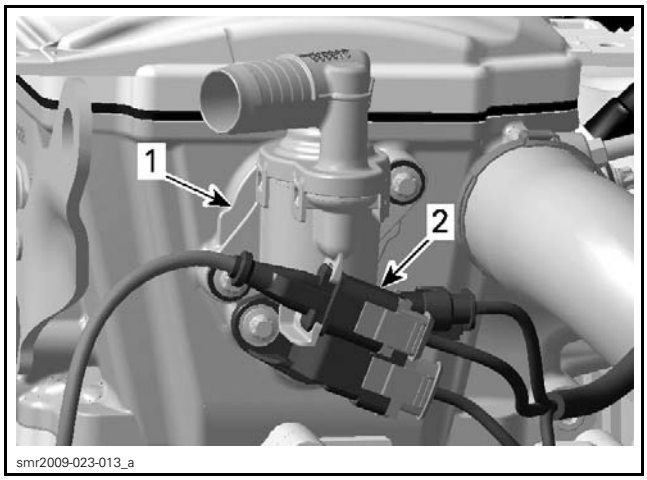

1. *Blow-by valve*
2. *CPS connector*

Disconnect the TOPS switch connector of the blow-by valve.

Unscrew and remove the blow-by valve.

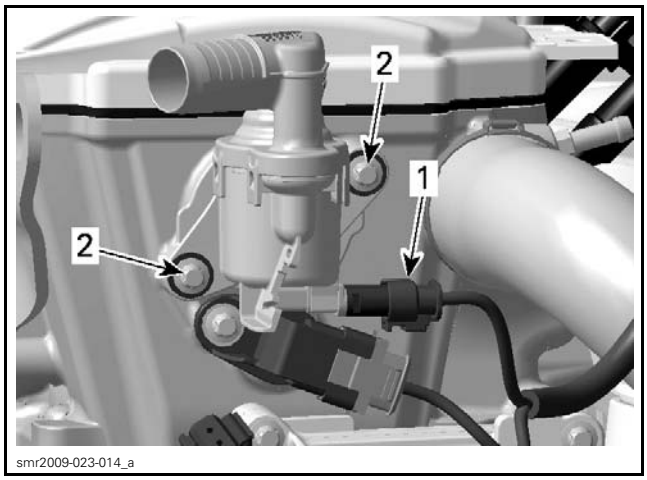

1. *TOPS switch connector*
2. *Retaining screws*

Remove and discard O-ring and V-ring.

NOTE: The blow-by valve can not be disassembled.

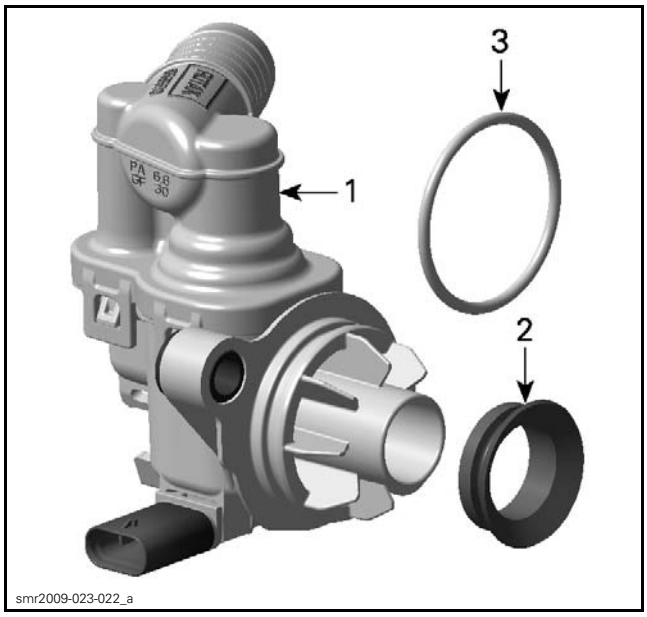

1. *Blow-by valve*
2. *V-ring*
3. *O-ring*

Inspecting the Blow-By Valve

If blow-by valve is damaged, replace it.

Clean all contact surfaces of blow-by valve.

Place a clean rag on valve inlet.

Blow air through inlet port. Air must flow freely to the outlet port.

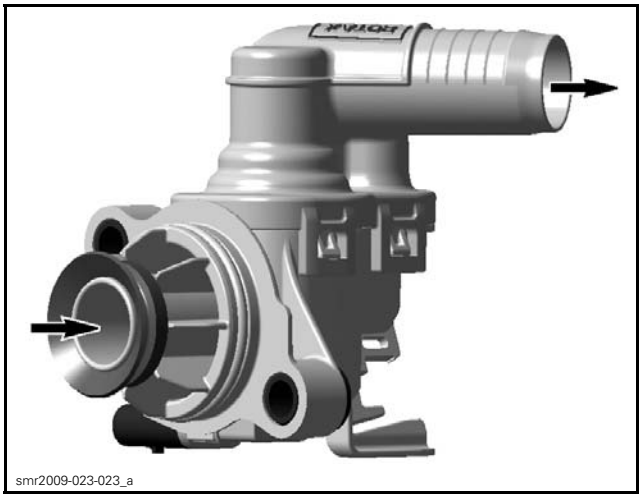

Turn valve upside down and blow air again. Air must not flow out.

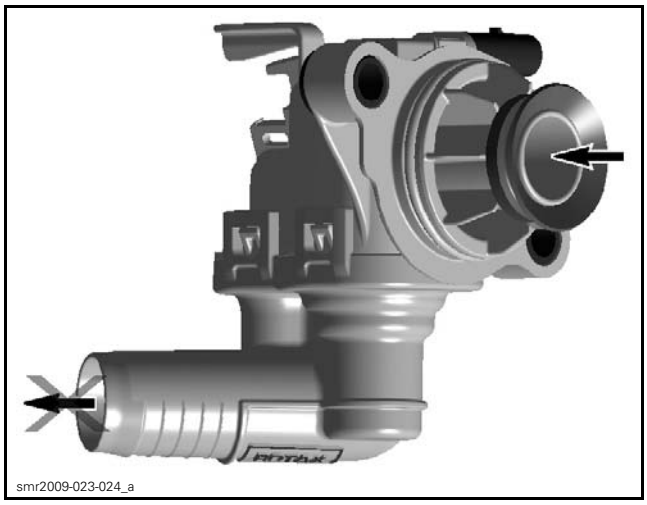
smr2009-023-024_a

If test fails, replace blow-by valve.

Installing the Blow-By Valve

The installation is the reverse of the removal procedure. However, pay attention to the following.

Install the blow-by valve with **NEW** O-ring and V-ring.

Apply LOCTITE 243 (BLUE) (P/N 293 800 060) on threads of blow-by valve screws.

Tighten blow-by valve screws to specification.

TIGHTENING TORQUE	
Blow-by valve screws	9 N•m (80 lbf•**in**)

Reinstall remaining removed parts.

TOPS SWITCH

Tip Over Protection Switch (TOPS Switch) Function

The function of the TOPS switch is the engine protection in the event the watercraft tip over.

During normal operation the TOPS switch state is OFF, no signal to the ECM.

If the watercraft tips over, gravity causes a valve piston to close and no engine oil will leak out of the blow-by valve.

In this event, a pin (with magnet) opens a gap to the TOPS switch (Hall effect sensor) and the TOPS changes its state to ON and sends a signal to the ECM.

The ECM will shut down the engine by cutting the ignition and the fuel injection.

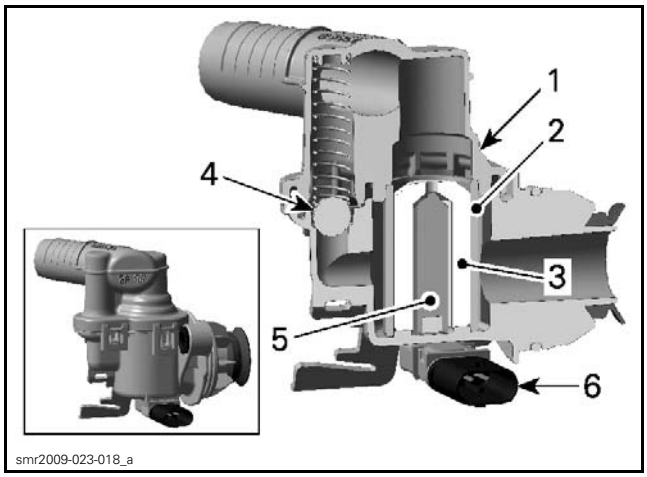

smr2009-023-018_a

BLOW-BY VALVE CUT-AWAY
1. *Valve housing*
2. *Valve sleeve*
3. *Valve piston*
4. *Check ball*
5. *Valve pin (with magnet)*
6. *TOPS switch of the blow-by valve*

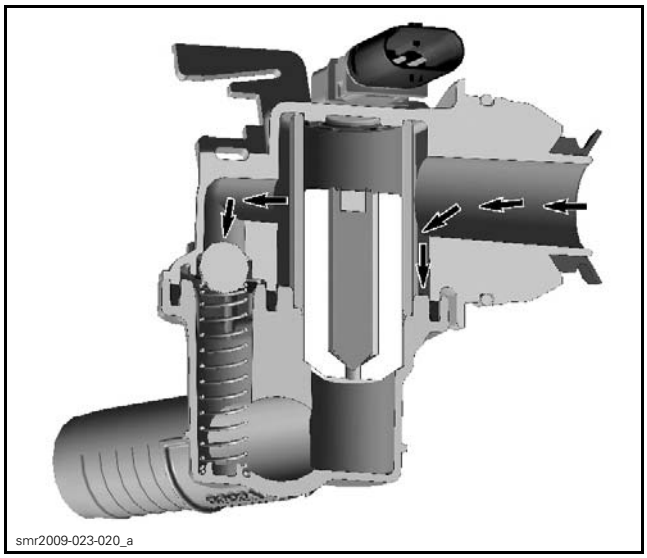
smr2009-023-020_a

TIP OVER FUNCTION

Testing the TOPS Switch Input Voltage

Models with Suspension

Remove:

– Deck extension, refer to *BODY (GTX, RXT AND WAKE PRO SERIES)* subsection.
– Air intake silencer, refer to appropriate *AIR INTAKE SYSTEM* subsection.

All Models

Disconnect the TOPS switch connector of the blow-by valve.

Briefly press the START/STOP button to wake-up the ECM.

Probe terminals as shown to check the voltage output from the ECM.

TOPS SWITCH CONNECTOR	VOLTAGE
Pins 2 and 3	Approximately 5 Vdc

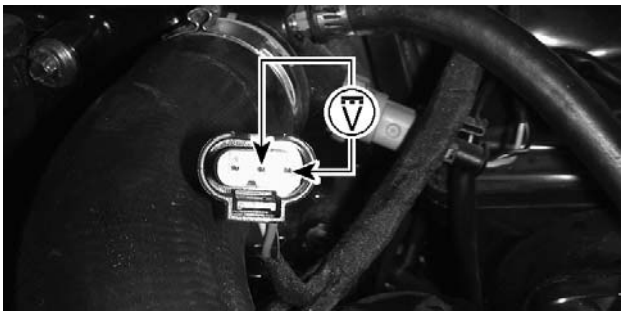

smr2009-023-103_a

If voltage test is good, check the TOPS switch output voltage.

If voltage test is not good, check the continuity of the blow-by valve TOPS switch circuit.

NOTE: After voltage test, clear the fault codes in the ECM using the B.U.D.S. software.

Testing the TOPS Switch Output Voltage

Remove the blow-by valve.

Back-probe TOPS connector and check voltage.

REQUIRED TOOL	
FLUKE 115 MULTIMETER (P/N 529 035 868)	

NOTE: To easily probe wire terminals through the back of the connector, use the BACK PROBE TEST WIRES (P/N 529 036 063) or an equivalent.

529036063

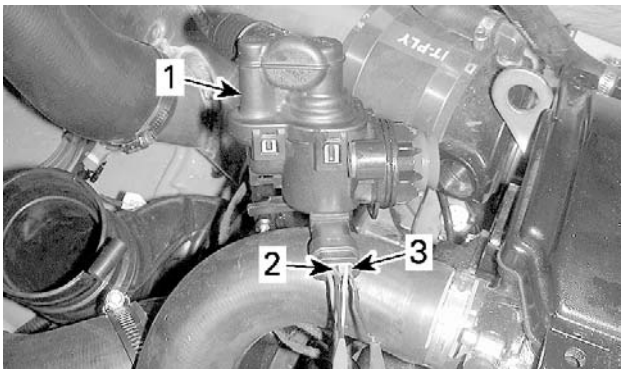

smr2009-023-050_a

BLOW-BY VALVE IN NORMAL POSITION
1. *Blow-by valve*
2. *RED probe into pin 2*
3. *BLACK probe into pin 1*

TOPS SWITCH CONNECTOR	BLOW-BY VALVE POSITION	VOLTAGE
Pin 1 and pin 2	Normal position	0.4 ± 0.1 Vdc
Pin 1 and pin 2	Upside down	4.4 ± 0.2 Vdc
Pin 2 and pin 3	Normal position or upside down	Approximately 5 Vdc

Replace TOPS switch if not within specification.

TOPS Switch Circuit Continuity

Disconnect the TOPS switch connector of the blow-by valve.

Disconnect the connector "A" from the ECM.

Check continuity of the blow-by valve TOPS switch circuit as per following table.

REQUIRED TOOL	
ECM ADAPTER TOOL (P/N 529 036 166)	
FLUKE 115 MULTIMETER (P/N 529 035 868)	

TOPS SWITCH CONNECTOR	ECM ADAPTER	RESISTANCE
Pin 1	Pin F4	Close to 0 Ω (continuity)
Pin 2	Pin G1	
Pin 3	Pin C4	

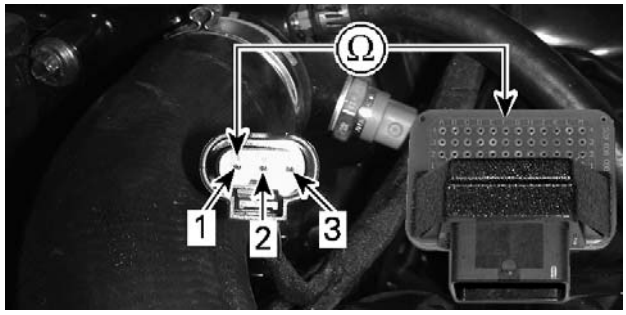

smr2009-023-103_b

1. *Pin 1*
2. *Pin 2*
3. *Pin 3*

If continuity test is good, check ECM. Refer to *ELECTRONIC FUEL INJECTION (EFI)* subsection.

If continuity test is not good, repair or replace defective wires or connectors.

Replacing the TOPS Switch

Remove blow-by valve and turn it upside down.

Insert a small screwdriver between TOPS switch and its retaining tab. Twist and hold the TOPS switch then release the other retaining tab.

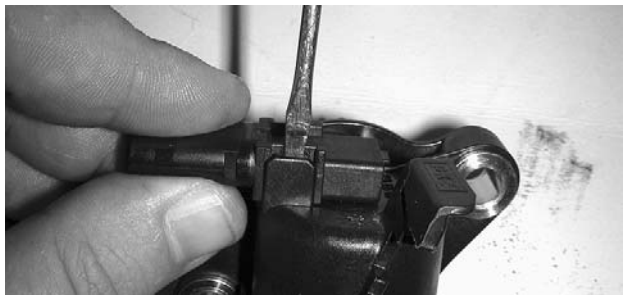
smr2009-023-051

When installing the TOPS switch, make sure printed information is visible.

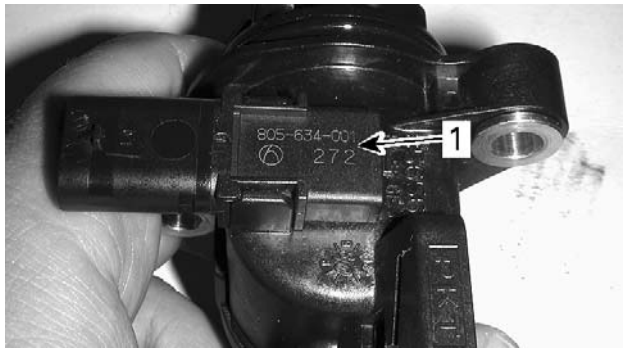

smr2009-023-052_a

1. *TOPS valve inscriptions*

OIL COOLER

The oil cooler is located below the air intake manifold.

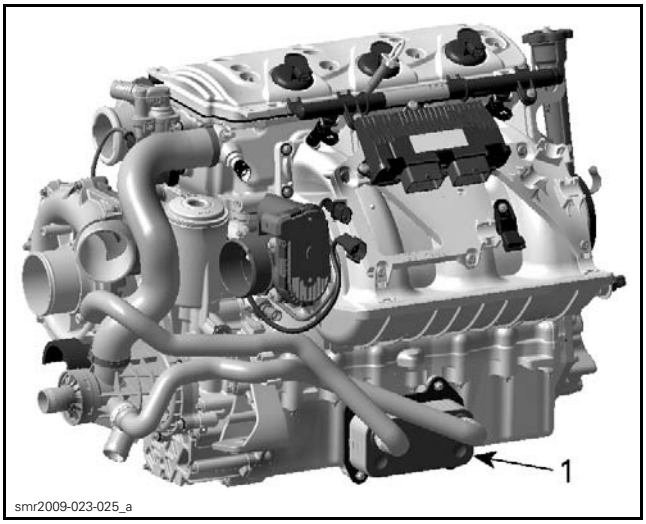

smr2009-023-025_a

1. *Oil cooler*

Removal the Oil Cooler

Remove engine from vehicle. Refer to *ENGINE REMOVAL AND INSTALLATION* subsection.

Disconnect cooling hoses from oil cooler.

Remove screws securing oil cooler.

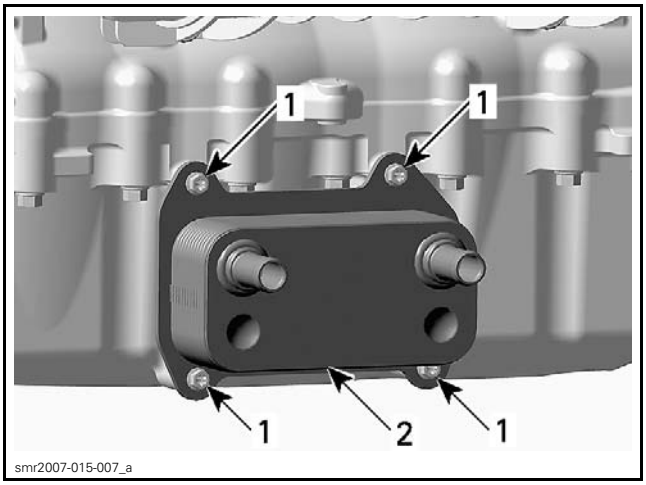

smr2007-015-007_a

1. *Oil cooler crews*
2. *Oil cooler*

Remove oil cooler from engine. Ensure not to lose O-rings located between oil cooler and engine.

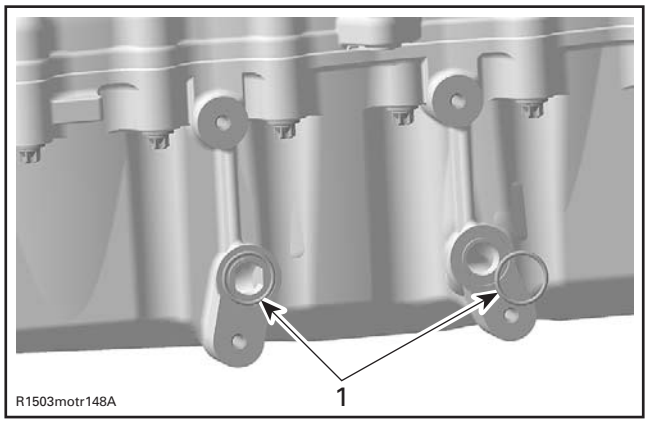

1. O-rings

Inspecting the Oil Cooler

If O-rings are brittle, cracked or hard, replace them.

Clean both contact surfaces of oil cooler.

Check and clean the oil inlet and outlet area for dirt and other contaminations.

Installing the Oil Cooler

For installation, reverse the removal procedure. Pay attention to the following details.

Apply engine oil on O-rings.

Apply LOCTITE 243 (BLUE) (P/N 293 800 060) on threads of oil cooler screws.

Tighten oil cooler screws to specification.

TIGHTENING TORQUE	
Oil cooler screws	9 N•m (80 lbf•**in**)

COOLING SYSTEM

SERVICE TOOLS

Description	Part Number	Page
OETIKER PLIERS	295 000 070	8
TEST CAP	529 035 991	7
VACUUM/PRESSURE PUMP	529 021 800	7

SERVICE PRODUCTS

Description	Part Number	Page
LOCTITE 243 (BLUE)	293 800 060	10
LOCTITE 567 (PIPE SEALANT)	293 800 013	6
LONG LIFE ANTIFREEZE	219 702 685	5

Cooling System (Closed loop)

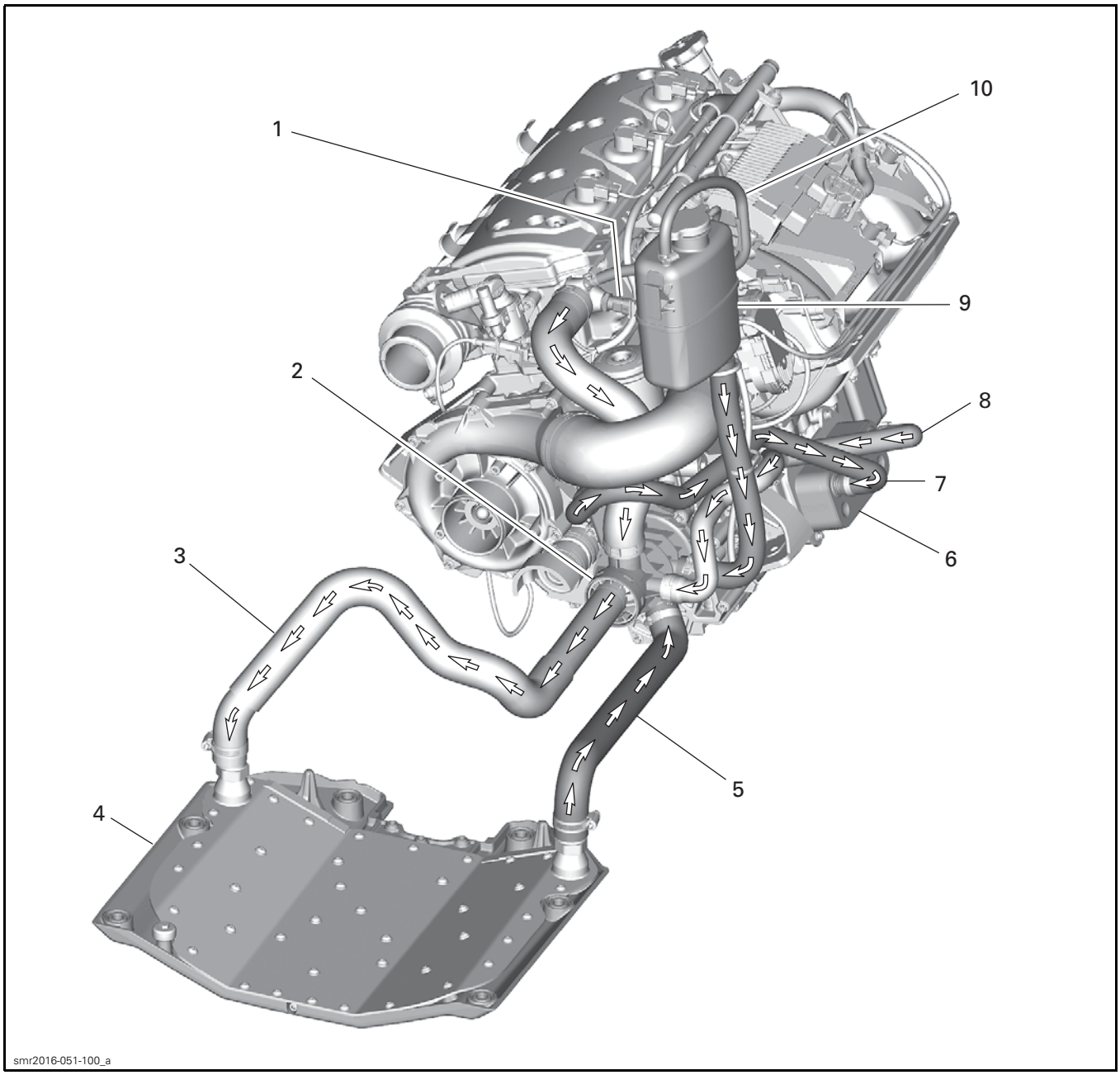

1. *Coolant temperature sensor (CTS) activates when monitoring beeper turns on at 110°C (230°F)*
2. *Coolant housing including thermostat opens at 87°C (189°F) and water pump impeller*
3. *Coolant flows to ride plate*
4. *Ride plate (operates as heat exchanger)*
5. *Coolant returns from ride plate*
6. *Oil cooler*
7. *Coolant flows to oil cooler*
8. *Coolant returns from oil cooler*
9. *Expansion coolant tank*
10. *Bleed hose from cylinder head to expansion coolant tank*

Cooling System Components

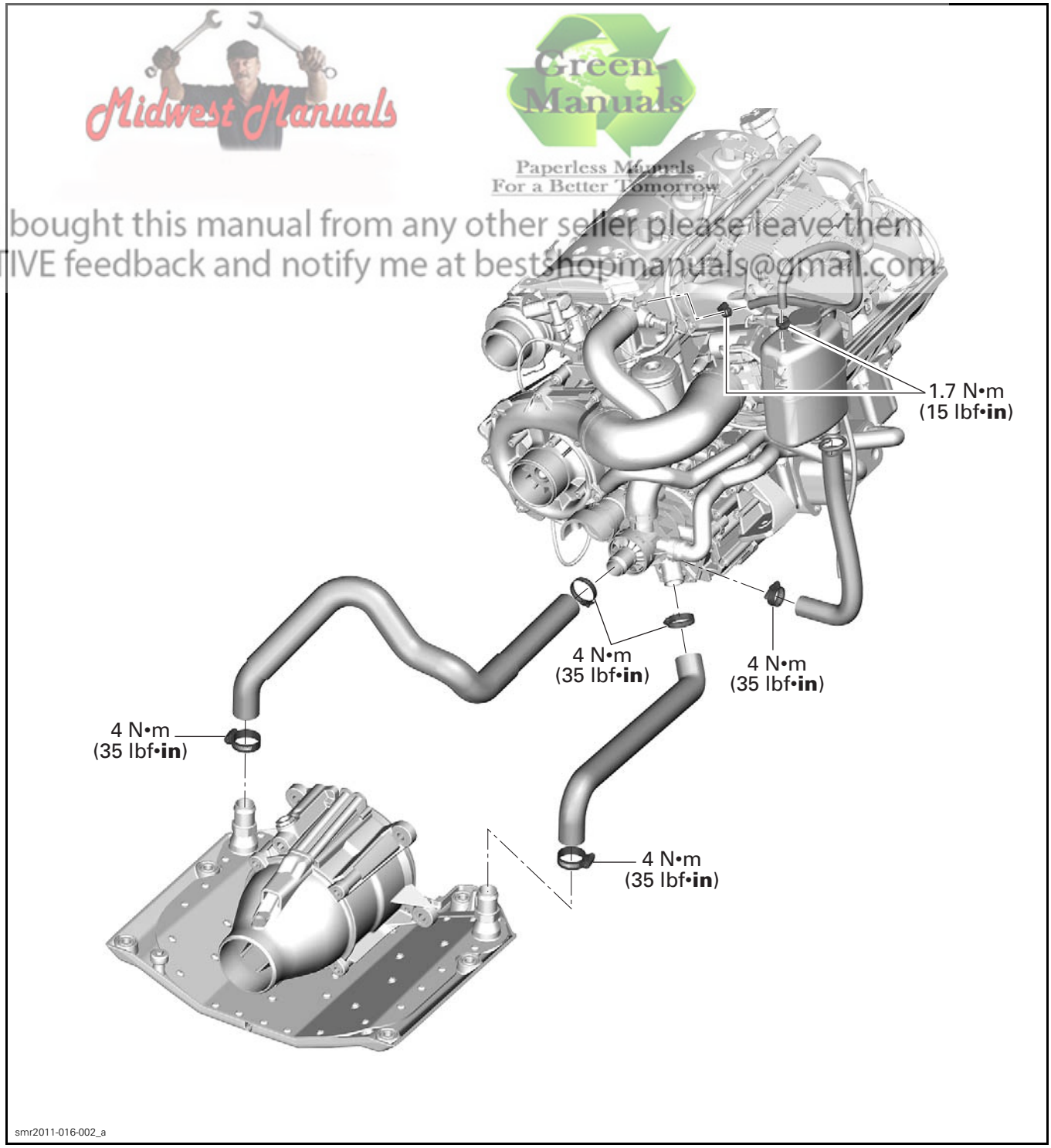

Midwest Manuals
Green Manuals
Paperless Manuals For a Better Tomorrow
If you bought this manual from any other seller please leave them NEGATIVE feedback and notify me at bestshopmanuals@gmail.com

Cooling System Components (Engine)

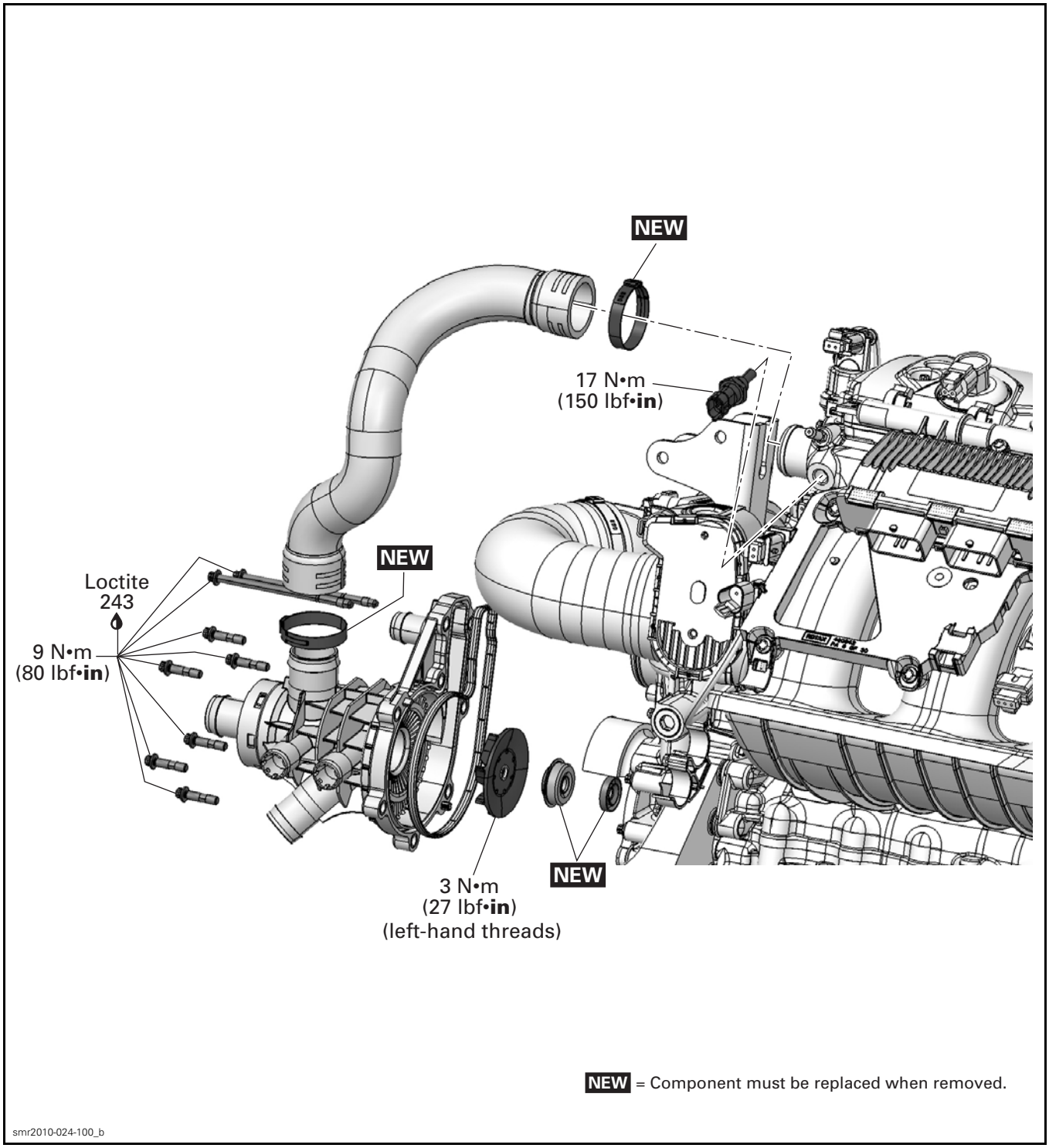

GENERAL

SYSTEM DESCRIPTION

A closed loop cooling system is utilized on the 1503 4-TEC engines, which offers an efficient engine cooling while keeping dirt and salt water out of the cooling system. This system keeps the temperature constant and prevents internal engine corrosion.

A separate coolant tank ensures that enough engine coolant is in the circuit during any operating condition.

The coolant flow comes from the water pump impeller into the cylinder block. It goes around the cylinders and straight up to the cylinder head. A smaller quantity of engine coolant enters the cylinder block on the exhaust side for a better cooling. In the cylinder head the water channels flow around the exhaust and then the intake valves and leave the engine through a large hose. From there the coolant goes back to the water pump housing and depending on the engine temperature, it flows through the thermostat directly back to the water pump impeller, or it takes its way through the heat exchanger.

Engine coolant is also directed towards the oil cooler (coolant type).

Coolant temperature sensor and bleed hose nipple are located on the cylinder head.

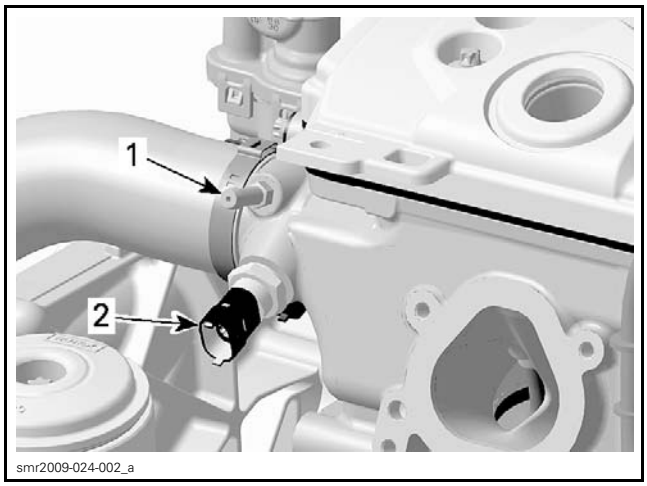

1. *Bleed hose nipple*
2. *Coolant temperature sensor (CTS)*

NOTICE **Never modify cooling system arrangement, otherwise serious engine damage could occur.**

Technical Specifications

TYPE	Closed loop cooling system.
COOLANT FLOW	Flow from water pump.
TEMPERATURE CONTROL	Thermostat.
SYSTEM BLEEDING	Self-bleed type through coolant tank (hose at uppermost point of circuit).
MONITORING BEEPER	Turns on at 110°C (230°F).

MAINTENANCE

ENGINE COOLANT

⚠ WARNING

To avoid potential burns, do not remove the coolant tank cap or loosen the ride plate drain plug if the engine is hot.

Recommended Coolant

Always use LONG LIFE ANTIFREEZE (P/N 219 702 685) or equivalent. If the recommended coolant is not available, use a low silicate, extended life ethylene-glycol premixed coolant (50%-50%) specifically formulated for internal combustion aluminum engines.

To prevent antifreeze deterioration, always use the same brand and grade. Never mix different brands or grades unless cooling system is completely flushed and refilled.

Draining the System

⚠ WARNING

Never drain or refill cooling system when engine is hot.

Open or remove seat.

On **models with suspension**, remove the rear ventilation box.

Install a drain pan underneath the ride plate.

Unscrew the drain plug on ride plate.

NOTE: Raising the front of the watercraft will contribute to drain the cooling system.

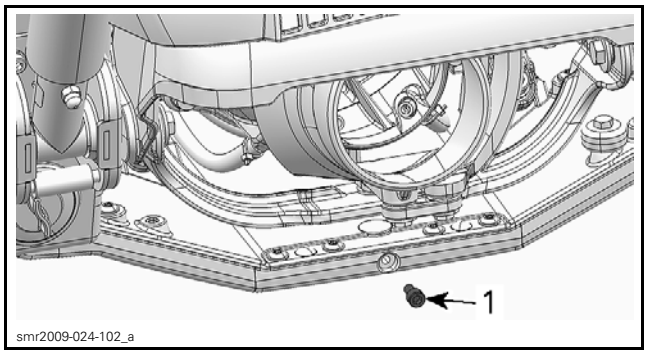

1. Cooling drain plug

Remove the coolant tank cap.

Dispose coolant as per local regulations.

Do not reinstall drain plug at this time.

Cleaning the System

NOTICE **Cleaning the cooling system as per the following procedure is required when engine overheats (assuming everything else is operating normally) or each time coolant is replaced.**

Drain the cooling system.

Add a cleaning product such as the Zerex® Super Cleaner by Valvoline (or an equivalent) in coolant tank then fill cooling system with demineralized water.

Reinstall cap on coolant tank.

Install watercraft in a test basin or ride on a water plane. Start engine and run for approximately 15 minutes.

IMPORTANT: Ensure thermostat opens so that the cleaning product flows in ride plate properly.

Stop engine and let the cleaning product work for 12 to 16 hours.

Thereafter, engine can be run one last time to soak off deposits.

Drain and thoroughly rinse the cooling system with clean fresh water.

Refill cooling system as described below.

Refilling the System

Watercraft should be level, engine cold and drain plug removed for refilling.

Place a container under drain plug to collect antifreeze.

Apply LOCTITE 567 (PIPE SEALANT) (P/N 293 800 013) on drain plug threads.

Ask someone to pour recommended antifreeze in coolant tank.

When antifreeze flows out from the ride plate drain hole, reinstall drain plug. Torque drain plug to specification.

TIGHTENING TORQUE	
Drain plug	8.5 N•m (75 lbf•**in**)

Continue to pour and fill coolant tank between marks.

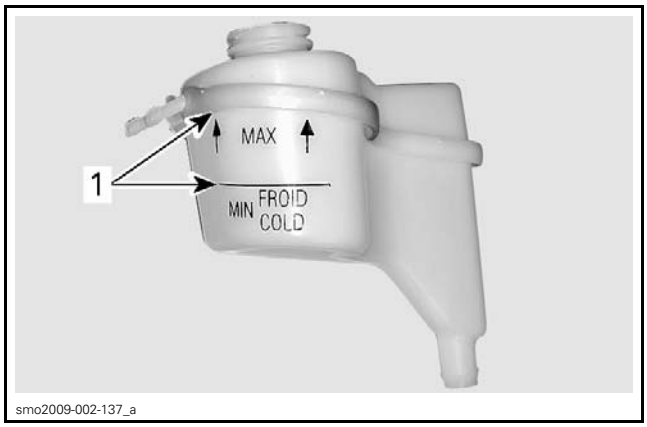

TYPICAL
1. Level between marks when engine is cold

Do not install pressure cap at this time.

Link a garden hose to the hose adapter at the back of the watercraft. Refer to *FLUSHING THE EXHAUST SYSTEM* in the *EXHAUST SYSTEM* subsection.

NOTICE **Never run engine without supplying water to the exhaust system.**

Start engine and let run for a maximum of 2 minutes. Stop engine and wait 15 minutes to cool down. Refill tank as necessary.

NOTICE **Never run engine longer than 2 minutes. Drive line seal has no cooling when watercraft is out of water.**

Repeat this run-stop cycle 2-3 times until thermostat opens and stop engine.

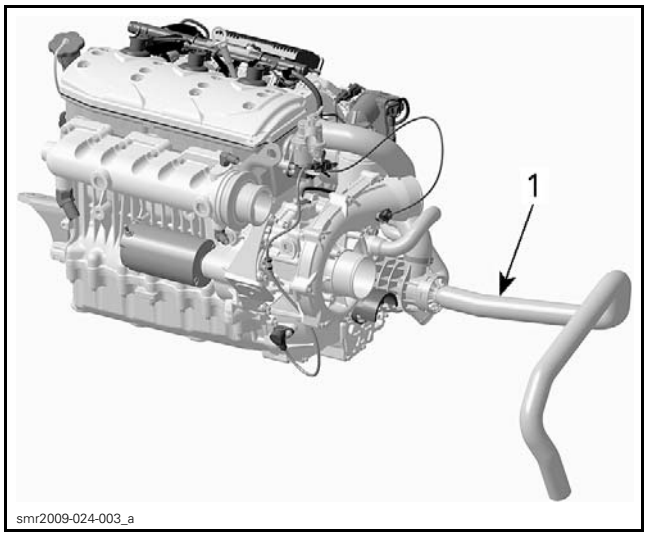

1. *This hose becomes hot when thermostat opens*

Last, refill coolant tank and install pressure cap.

When engine has completely cooled down, recheck coolant level in the coolant tank and top up if necessary.

INSPECTION

COOLING SYSTEM LEAK TEST

⚠ WARNING

To avoid potential burns, do not remove the coolant tank cap or loosen the ride plate drain plug if the engine is hot.

Open or remove seat.

On **models with suspension**, remove the deck extension. Refer to *BODY (GTX, RXT AND WAKE PRO SERIES* subsection.

Install the TEST CAP (P/N 529 035 991)on the coolant tank.

NOTE: It is not necessary to install a hose pincher on overflow hose.

Connect the VACUUM/PRESSURE PUMP (P/N 529 021 800) to test cap and pressurize system through coolant tank to 90 kPa (13 PSI).

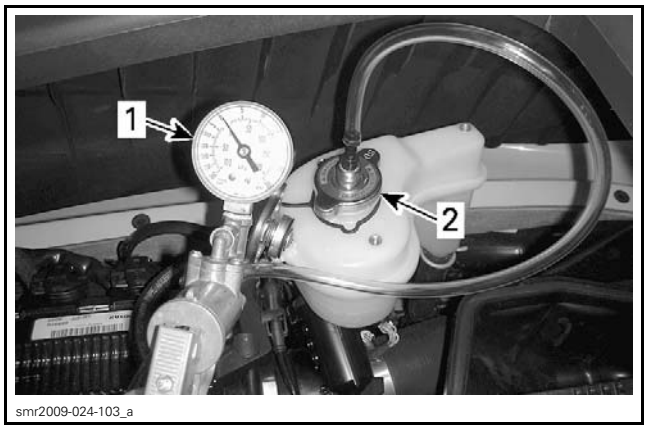

TYPICAL
1. *Vacuum/pressure pump*
2. *Test cap*

Check all hoses, ride plate, engine and oil cooler for coolant leaks. Spray a soap and water solution and look for air bubbles.

NOTE: Rinse all components with clear water to remove all soap residues.

Check the leak indicator hole if there is oil or coolant. If so, replace appropriate water pump shaft seal.

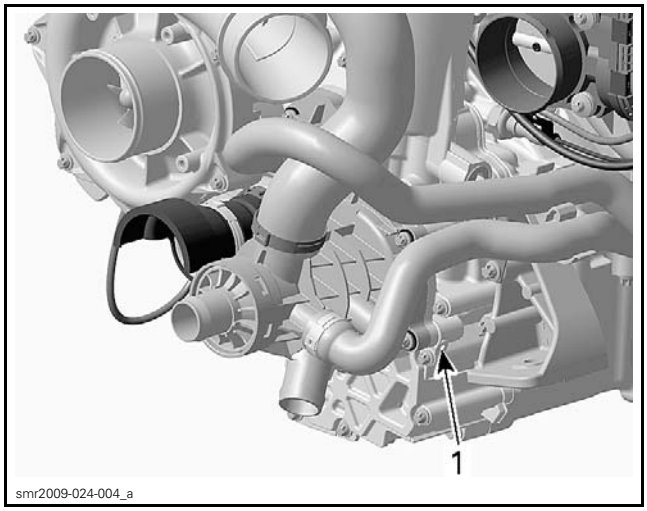

1. *Leak indicator hole*

TROUBLESHOOTING

The following is provided to help in diagnosing the probable source of troubles. It is a guideline and it should not be assumed to list all possible problems.

Always check for fault codes. If a fault code is detected, service the fault code first. Refer to *DIAGNOSTIC AND FAULT CODES* subsection.

ENGINE OVERHEATING

1. Low coolant level.
   - *Refill and check for leaks (coolant leaking out of engine leak indicator hole, hoses or clamps missing/defective, cylinder head gaskets leaks, ride plate leaking, etc.). Repair or replace.*
2. Air in cooling system
   - *Refill and bleed cooling system.*
3. Thermostat defective (does not open when engine gets hot)
   - *Replace thermostat housing.*
4. Water pump failure
   - *Inspect and replace defective components.*
5. Water temperature sensor defective
   - *Check or replace. Refer to ELECTRONIC FUEL INJECTION (EFI).*
6. Ride plate or hoses damaged
   - *Check or replace damaged components.*
7. Exhaust system clogged
   - *Flush exhaust system.*
8. Internal passage blocked in cooling system
   - *Inspect and clean.*

PROCEDURES

PRESSURE CAP

Testing the Pressure Cap

Using a pressure cap tester, check cap opening pressure. If opening pressure is out of range, install a new pressure cap.

CAP OPENING PRESSURE	
Opening range	90 kPa ± 10 kPa (13 PSI ± 1.5 PSI)

CLAMPS

Replacing the Oetiker Clamp

To cut or secure Oetiker clamps of cooling system hoses, use the OETIKER PLIERS (P/N 295 000 070).

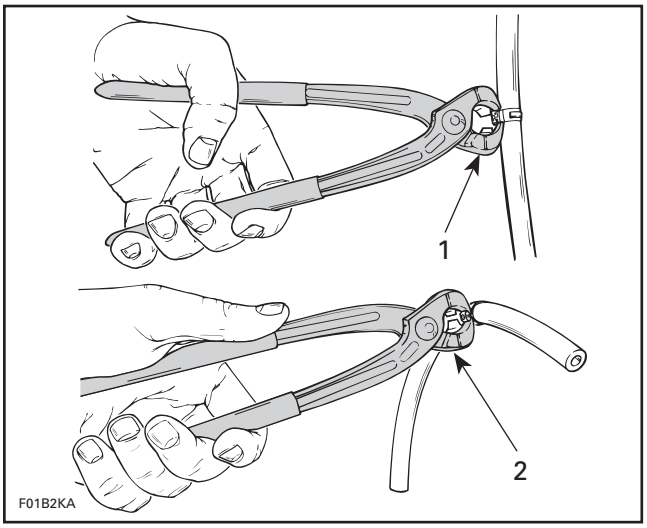

1. *Cutting clamp*
2. *Securing clamp*

NOTE: Always check general condition of hoses and clamp tightness.

WATER PUMP HOUSING

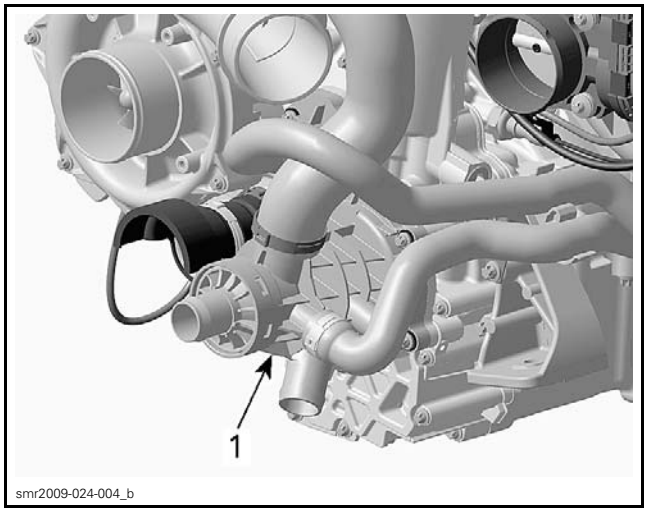

1. *Water pump housing*

Water Pump Housing Access

Models Without Suspension

1. Remove seat.

Models with Suspension

1. Remove moving deck and deck extension. Refer to *BODY (GTX, RXT AND WAKE PRO SERIES* subsection.
2. Remove the air intake silencer. Refer to *AIR INTAKE SYSTEM (MODELS WITH SUSPENSION)* subsection:
3. Detach the air intake hose from the throttle body.

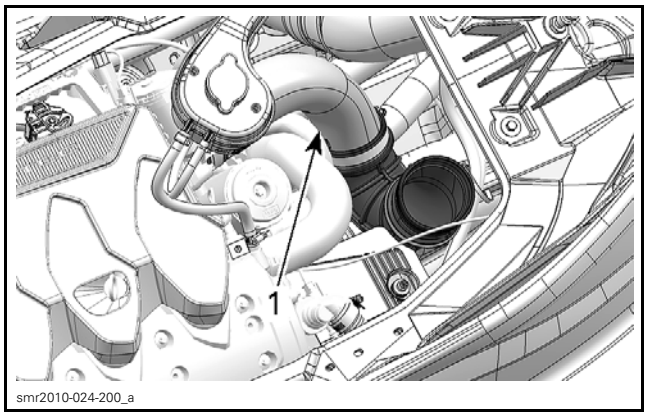

NATURALLY-ASPIRATED ENGINE
1. *Detach intake hose at throttle body*

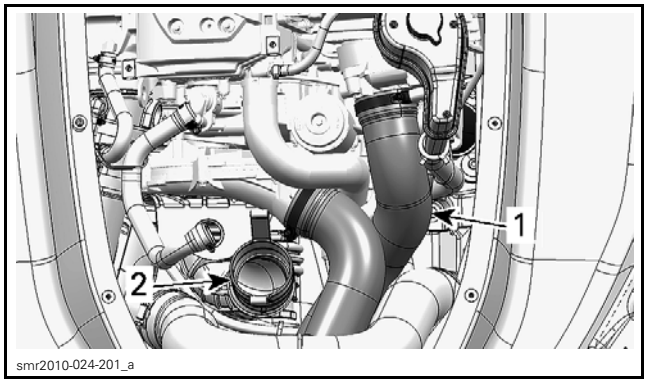

SUPERCHARGED ENGINE
1. *Detach intake hose at throttle body*
2. *Supercharger hose*

Supercharger Models

1. Remove the hose from the supercharger.

All Models

1. Drain cooling system and engine oil.
2. Disconnect the coolant tank hose from water pump housing and move coolant tank aside to make room.
3. Disconnect exhaust hose from the resonator. Place hose over muffler.

Removing the Water Pump Housing

Disconnect ride plate hoses from water pump housing.

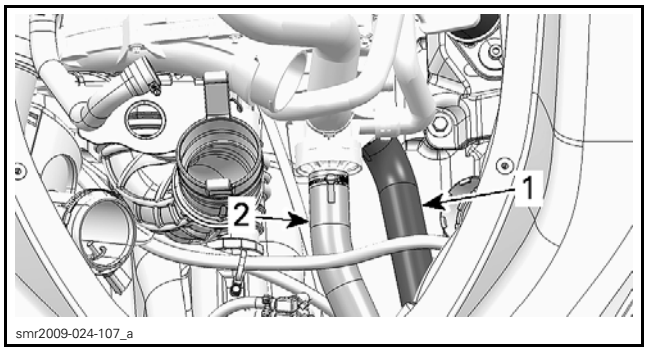

TYPICAL
1. *Ride plate outlet hose*
2. *Ride plate inlet hose*

Disconnect the cylinder head outlet hose and oil cooler hoses.

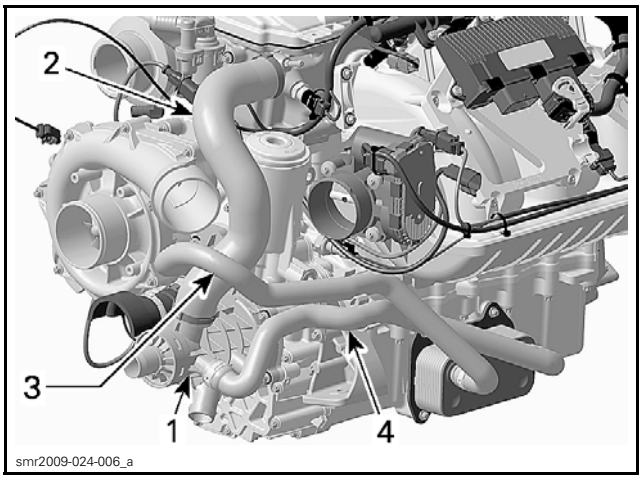

TYPICAL
1. *Water pump housing*
2. *Cylinder head hose*
3. *Oil cooler inlet hose*
4. *Oil cooler outlet hose*

Remove water pump housing screws.

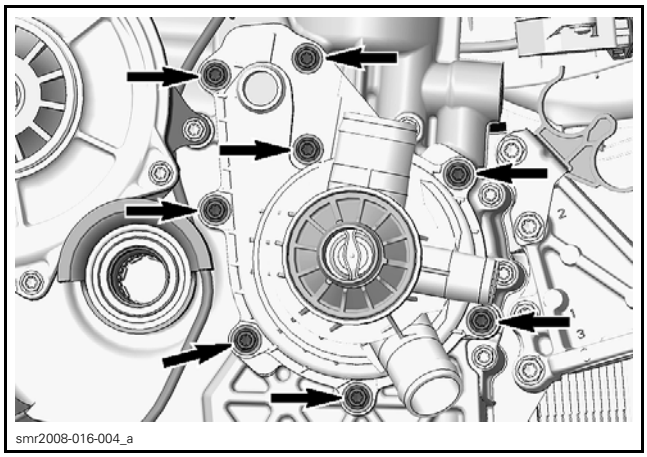

TYPICAL

Pull the water pump housing to remove it.

Inspecting the Water Pump Housing

Check if gasket is brittle, hard or damaged and replace as necessary.

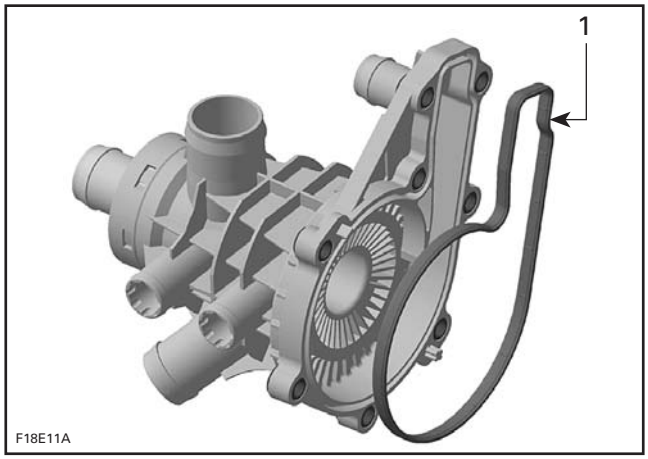

1. *Water pump housing gasket*

Check if thermostat is in good condition. Refer to *THERMOSTAT* in this subsection.

Water Pump Housing Leak Test

Plug the connections of the oil cooler return hose, coolant tank hose, ride plate return hose and cylinder head return hose with a rag.

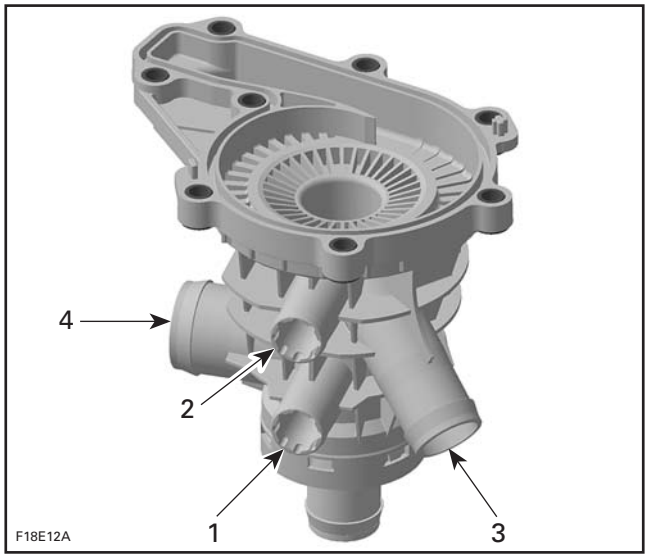

1. *Oil cooler return connection*
2. *Coolant tank hose connection*
3. *Ride plate return hose connection*
4. *Cylinder head return hose connection*

Fill the water pump housing with water.

If a bigger quantity of coolant leaks out at the ride plate outlet connection, replace the water pump housing.

If there is no leak, check the operation of the thermostat.

Installing the Water Pump Housing

The installation is the opposite of the removal procedure. However, pay attention to the following.

Apply LOCTITE 243 (BLUE) (P/N 293 800 060) on threads of water pump housing screws.

Install screws as per the following illustration.

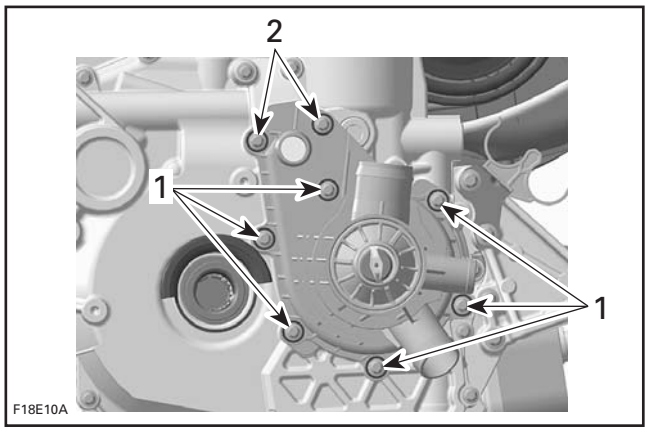

1. *Screws M6 x 25*
2. *Screws M6 x 105*

NOTICE **To prevent leaking, take care that the gaskets are exactly in groove when you reinstall the water pump housing.**

Tighten screws to specification using the following sequence.

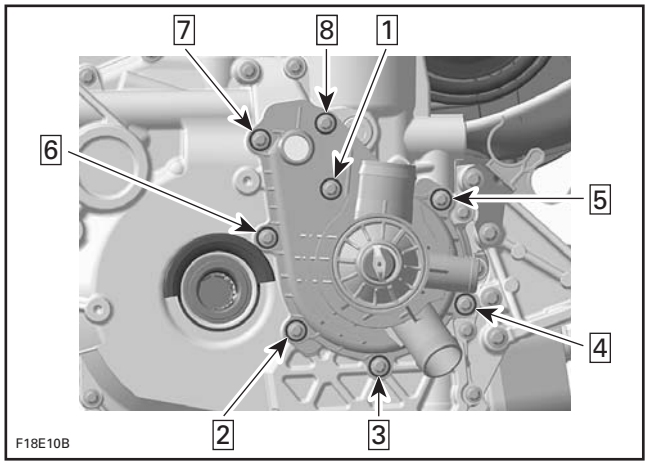

TIGHTENING TORQUE	
Water pump housing screws	9 N•m (80 lbf•**in**)

WATER PUMP IMPELLER

Removing the Water Pump Impeller

Remove the *WATER PUMP HOUSING*, see procedure in this subsection.

Unscrew the impeller clockwise.

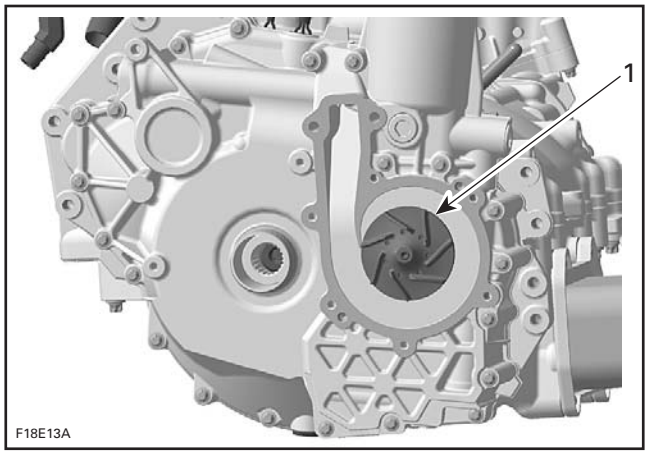

1. Impeller

NOTICE **Coolant/oil pump shaft and impeller have left-hand threads. Remove by turning clockwise and install by turning counterclockwise.**

Inspecting the Water Pump Impeller

Check impeller for cracks or other damage. Replace impeller if damaged.

Installing the Water Pump Impeller

The installation is the opposite of the removal procedure. Pay attention to the following details.

NOTICE **Be careful not to damage impeller wings during installation.**

Torque impeller to specification.

TIGHTENING TORQUE	
Water pump impeller	3 N•m (27 lbf•**in**)

THERMOSTAT

The thermostat is a single action type.

Removing the Thermostat

Remove the *WATER PUMP HOUSING*, see procedure in this subsection.

NOTE: The thermostat is located inside the water pump housing.

Testing the Thermostat

To check the operation of the thermostat, put it in water and heat water.

Look inside the cylinder head return hose connection to see the movement of the thermostat. Thermostat should open when water temperature reaches 87°C (189°F).

If there is no operation, replace the water pump housing.

Installing the Thermostat

For installation, reverse the removal procedure, paying attention to the following details.

Refer to *WATER PUMP HOUSING* in this subsection.

ROTARY SEAL

Inspecting the Rotary Seal

Check leak indicator hole for oil or coolant leak.

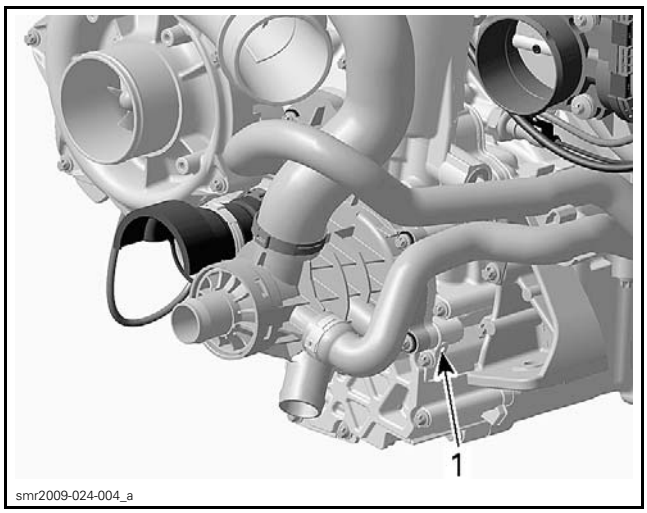

1. Leak indicator hole

Coolant leaking out of the hole indicates a defective rotary seal. Leaking oil indicates a faulty oil seal.

Rotary seal and oil seal must be replaced together.

Replacing the Rotary Seal

Refer to *LUBRICATION SYSTEM* subsection.

PTO HOUSING, MAGNETO AND STARTER

SERVICE TOOLS

Description	Part Number	Page
3-PIN MAGNETO HARNESS ADAPTER	529 036 016	10
HANDLE	420 877 650	10
IMPELLER REMOVER/INSTALLER	529 035 820	9
OETIKER PLIERS	295 000 070	8
STARTER DRIVE SEAL PUSHER	420 876 502	10
SUCTION PUMP	529 035 880	4

SERVICE PRODUCTS

Description	Part Number	Page
DIELECTRIC GREASE	293 550 004	17
ISOFLEX GREASE TOPAS NB 52	293 550 021	9, 14, 16
LOCTITE 243 (BLUE)	293 800 060	7, 12, 17
LOCTITE 648 (GREEN)	413 711 400	9
PULLEY FLANGE CLEANER	413 711 809	4, 8

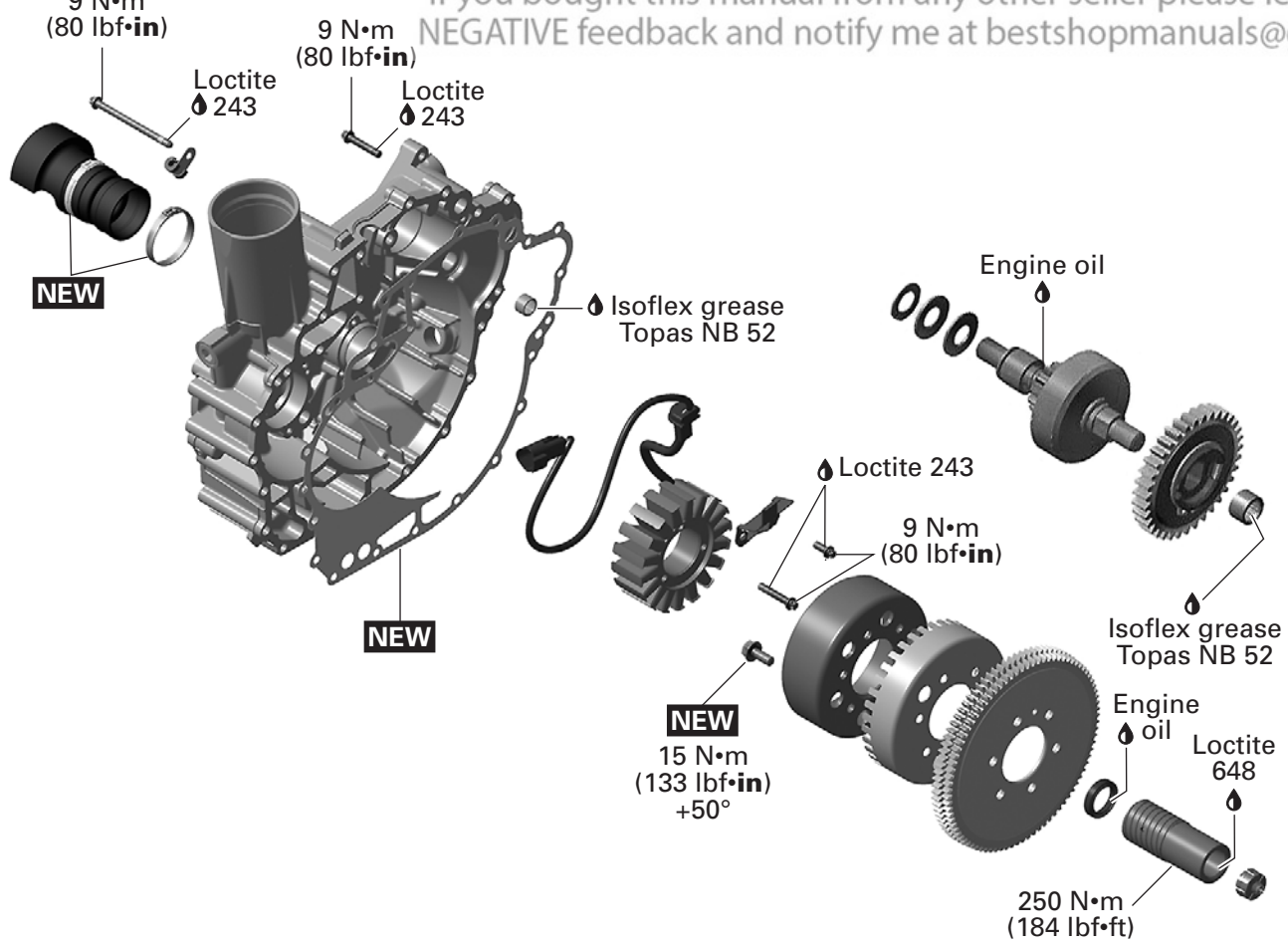

If you bought this manual from any other seller please leave them NEGATIVE feedback and notify me at bestshopmanuals@gmail.com

NEW = Component must be replaced when removed.

smr2010-022-001_b

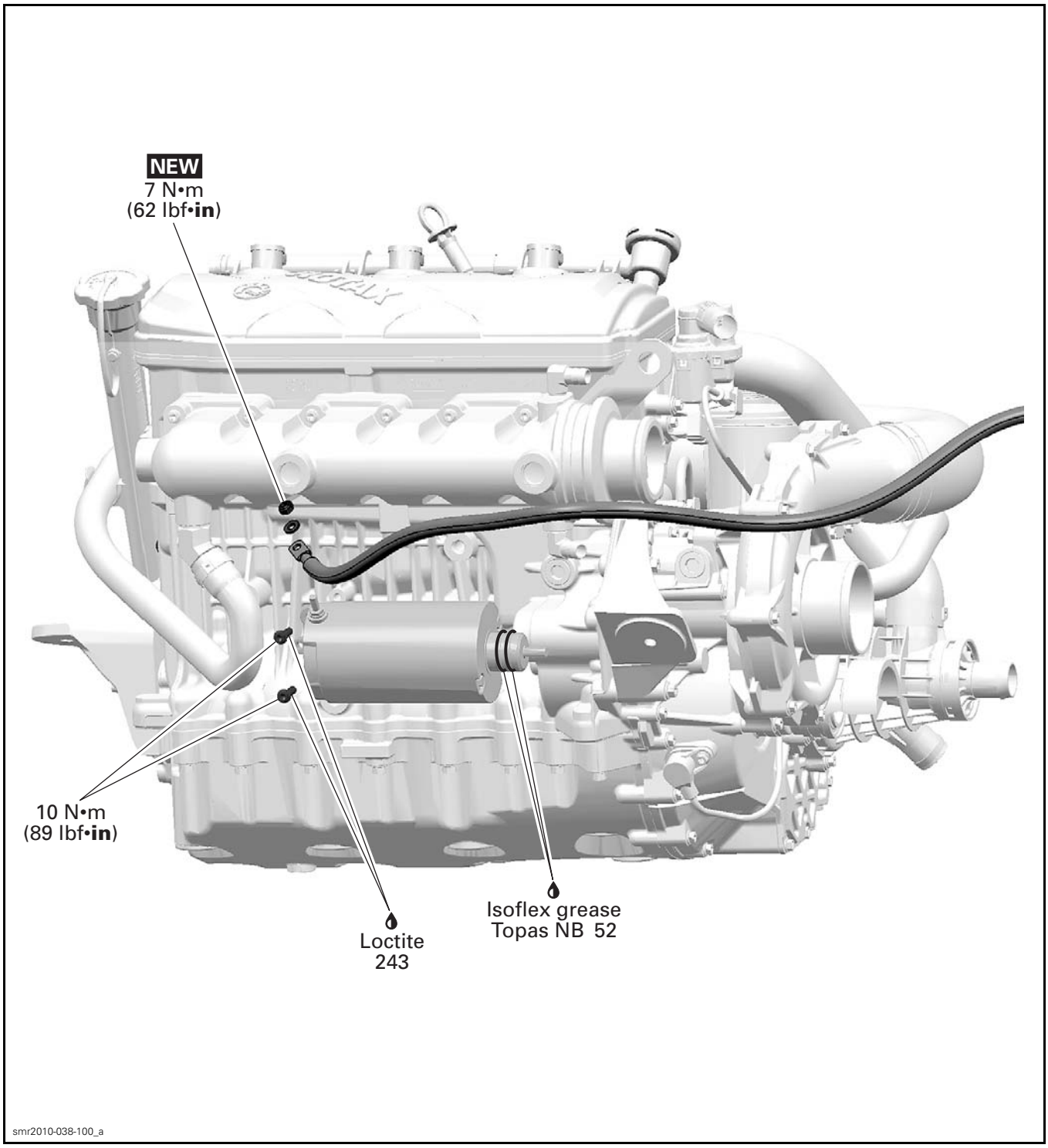
NEW
7 N•m
(62 lbf•in)
10 N•m
(89 lbf•in)
Loctite
243
Isoflex grease
Topas NB 52
smr2010-038-100_a

GENERAL

NOTE: It is good practice to check for fault codes using the B.U.D.S. software as a first troubleshooting step. Refer to the *DIAGNOSTIC AND FAULT CODES* subsection.

Always carry out electrical tests on components before removing or installing them.

PROCEDURES

PTO HOUSING

PTO Housing Access

Models with Suspension

Remove the moving deck and the deck extension. Refer to *BODY (GTX_RXT AND WAKE PRO SERIES)* subsection.

Remove the air intake silencer. Refer to appropriate *AIR INTAKE SYSTEM* subsection.

215 and 260 Engines

Remove the supercharger. Refer to *SUPERCHARGER* subsection.

All Models

Drain the engine oil. Refer to *LUBRICATION SYSTEM* subsection.

Drain engine coolant, refer to the *COOLING SYSTEM* subsection.

Refer to *STEERING AND PROPULSION* and remove the following:

– Jet pump
– Drive shaft
– Drive shaft bellows.

Removing the PTO Housing

1. Disconnect the battery. Refer to *STARTING SYSTEM* subsection.
2. Remove the valve cover. Refer to *CYLINDER HEAD* subsection.
3. Insert the tube of the suction pump in the lower area of the timing chain and syphon remaining oil out of the lower timing chain case.

REQUIRED TOOL	
SUCTION PUMP (P/N 529 035 880)	

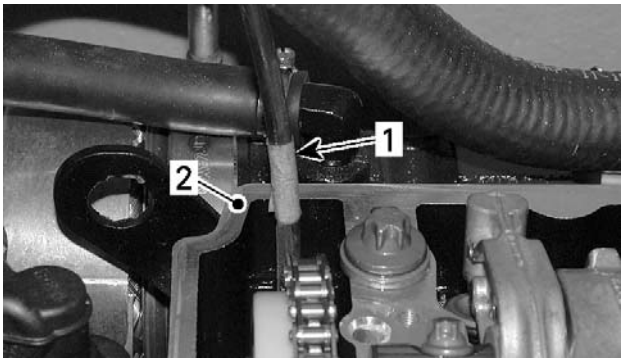

smr2006-006-003_a

1. Suction pump tube
2. Edge of cylinder block

4. Disconnect the air intake hose at throttle body.
5. Move muffler rearwards. Refer to *EXHAUST SYSTEM* subsection.
6. Disconnect CPS connector from wiring harness.

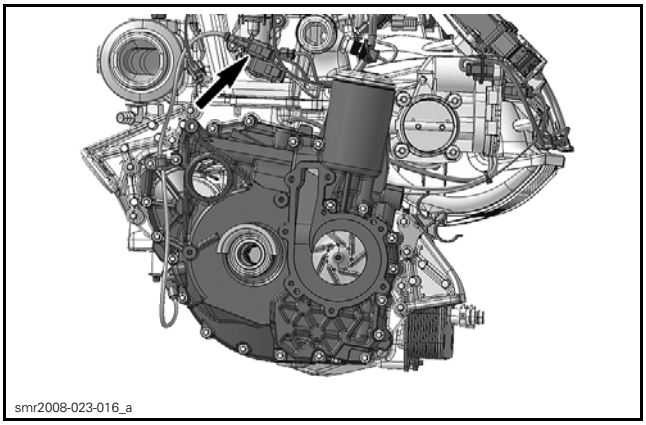
smr2008-023-016_a

CPS CONNECTOR

7. Disconnect the stator connector. Refer to *STATOR CONNECTOR ACCESS* in this subsection.
8. Place rags under PTO housing to prevent oil spillage.

NOTE: Up to 250 ml (8 U.S. oz) of oil could flow out when removing PTO housing. If spillage occurs, clean immediately with the PULLEY FLANGE CLEANER (P/N 413 711 809) to prevent oil stains.

9. Remove both rear engine support screws.

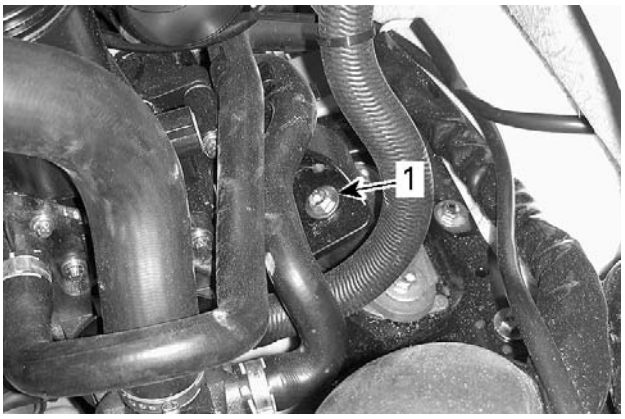

RIGHT SIDE OF VEHICLE
1. Rear engine support screw

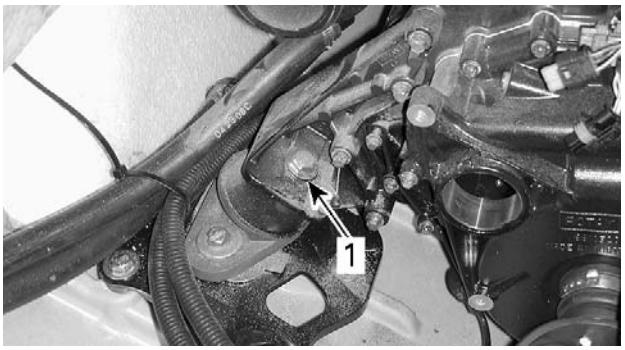

LEFT SIDE OF VEHICLE
1. Rear engine support screw

10. Slightly lift aft end of engine and insert a safely block under the engine to secure it in this position.
11. Remove LH rear engine support.

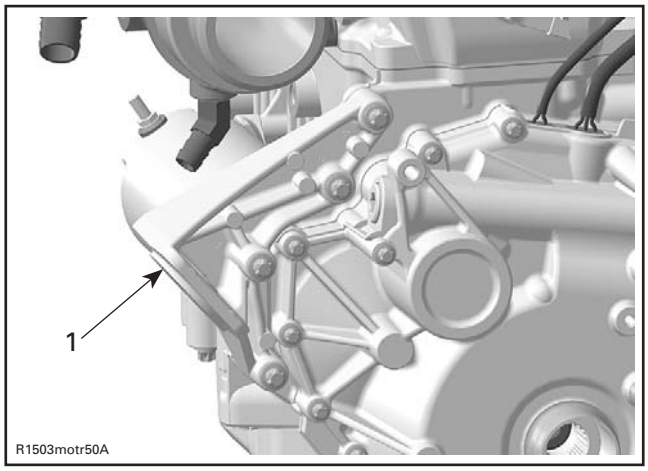

TYPICAL
1. Engine support

12. Remove water pump housing, refer to *COOLING SYSTEM* subsection.

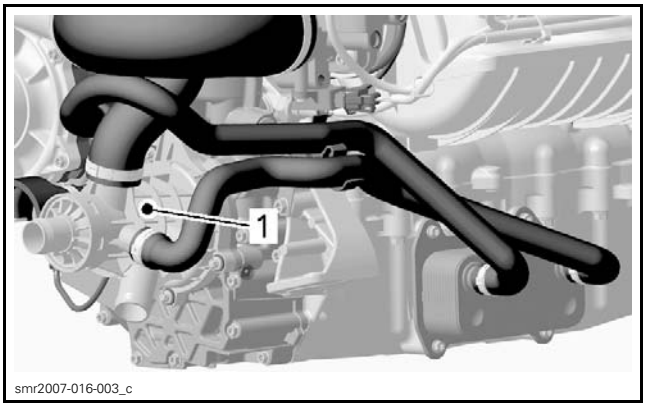

1. Water pump housing

13. Remove PTO housing retaining screws and CPS harness retaining clamp.

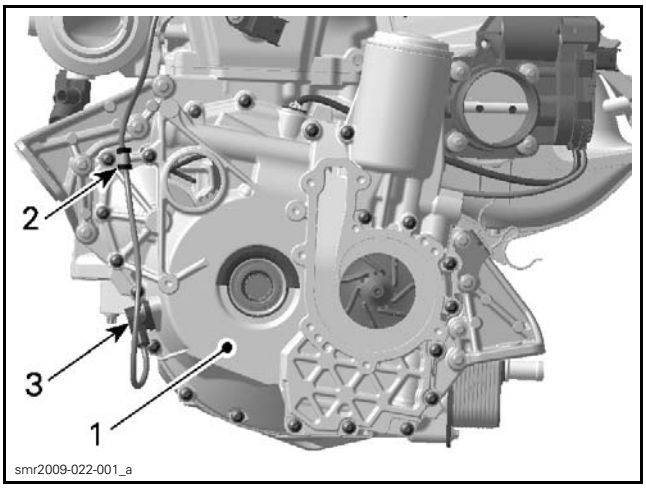

1. PTO housing
2. CPS harness retaining clamp
3. CPS

14. Pry off the PTO housing using two flat screwdrivers.

NOTICE **Avoid scoring or damaging contact surfaces.**

NOTE: Be careful not loosing the disc springs and thrust washer located on the starter drive shaft.

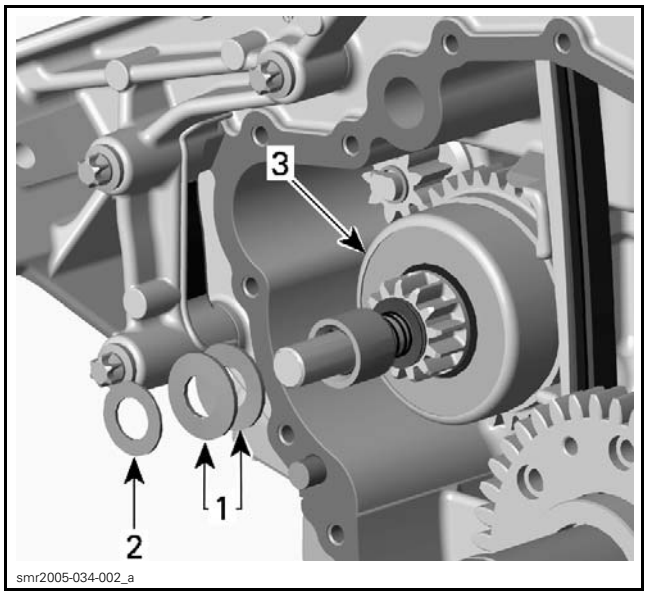

1. *Disc springs*
2. *Thrust washer*
3. *Starter drive*

15. Remove PTO housing gasket and discard it.

Inspecting the PTO Housing

Inspect PTO housing for cracks or any other damages. Replace if necessary.

Inspect the starter drive needle bearing in the PTO housing.

NOTE: Clean all disassembled metal components in a non-ferrous metal cleaner.

Inspect oil strainer for contaminants, debris or other particles. Clean as required.

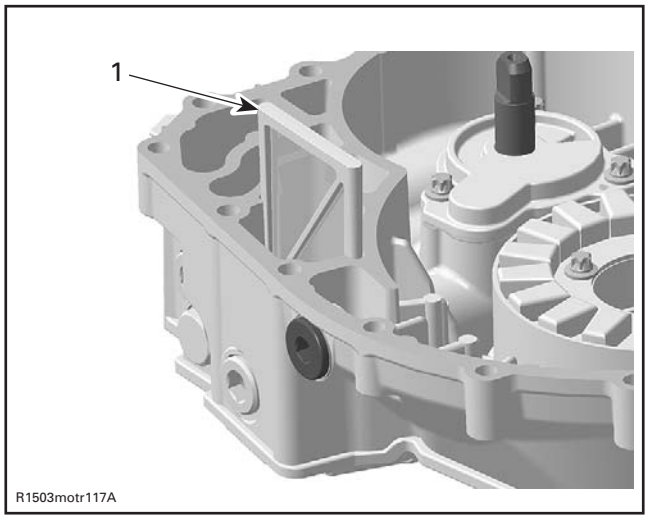

1. *PTO oil strainer*

Installing the PTO Housing

For installation, reverse the removal procedure. However, pay attention to the following.

Apply lubricants, sealers, threadlocker and torque as specified in exploded views.

Install starter drive, see *INSTALLING THE STARTER DRIVE* further in this subsection.

Install a NEW PTO housing gasket.

NOTE: When installing the PTO housing, you will need to rotate the oil/water pump shaft slightly to align it with the balance shaft for proper insertion.

NOTICE **Pay particular attention to the PTO housing gasket alignment to ensure that it does not get pinched, or slide out of its surface contact area. Never force housing when installing it. If there is a strong resistance, remove housing and check oil/water pump shaft alignment and starter drive gear alignment.**

NOTICE **Ensure the starter drive shaft is well aligned when engaging it in the PTO housing needle bearing.**

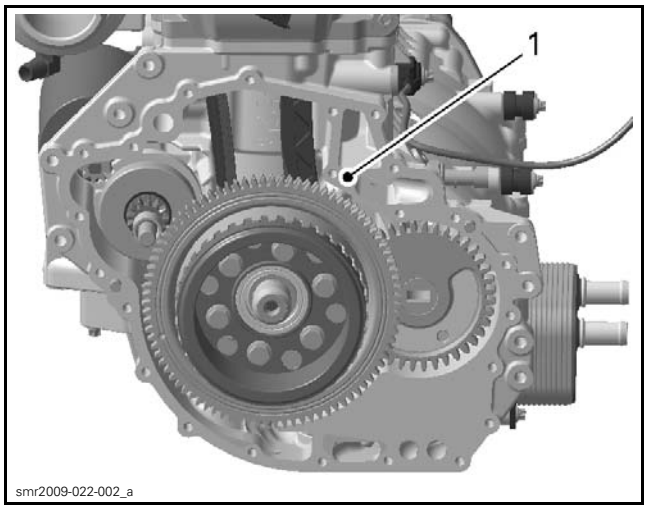

1. *Pay attention that gasket remains properly positioned on this surface*

Refer to the following illustration to identify the locations of the various housing screws.

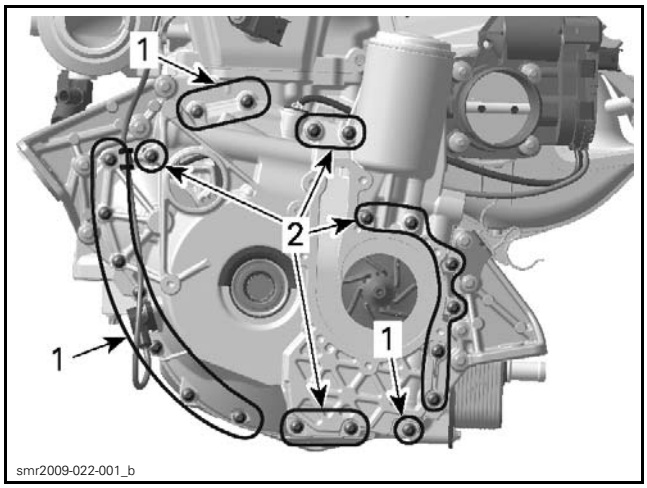

1. *Screws M6 x 35*
2. *Screws M6 x 85*

Install the CPS harness retaining clamp.

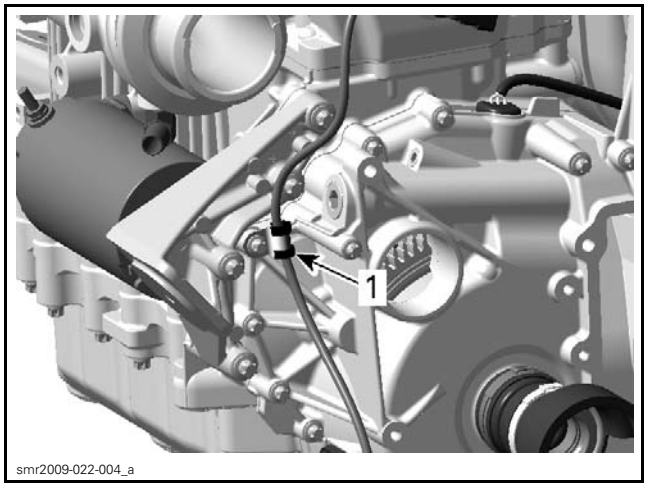

1. *CPS harness retaining clamp*

Install a **NEW** gasket

Install the PTO housing screws finger tight, then torque them as per following table and sequence numbered in the following illustration.

TIGHTENING TORQUE	
PTO housing screws	9 N•m (80 lbf•**in**) + LOCTITE 243 (BLUE) (P/N 293 800 060)

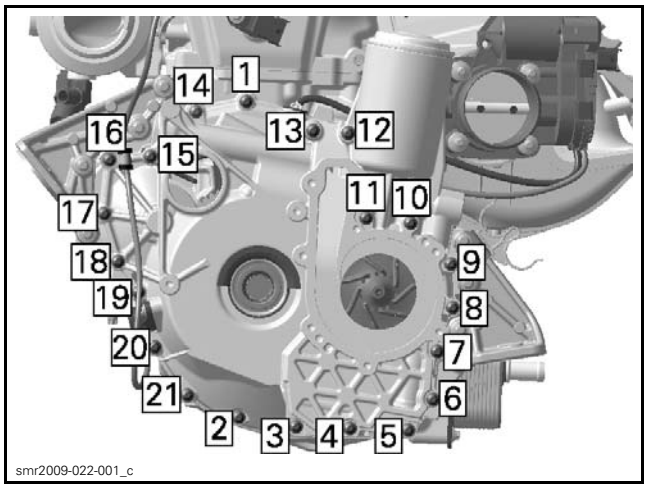

Reinstall LH engine support as per following table.

TIGHTENING TORQUE	
LH engine support screws	23 N•m (17 lbf•ft) + LOCTITE 243 (BLUE) (P/N 293 800 060)

Remove safety block from under engine.

Install both rear engine support screws loosely.

Carry out an engine alignment, refer to the *ENGINE REMOVAL AND INSTALLATION* subsection.

NOTICE **An engine alignment procedure must be carried, otherwise severe component damage may occur.**

Install all remaining parts, reconnect hoses and electrical connectors. Refer to applicable subsections for procedures.

Refill engine oil and coolant. Refer to *LUBRICATION SYSTEM* and *COOLING SYSTEM* subsections.

PTO SEAL

Inspecting the PTO Seal

Inspect the PTO seal on the PTO housing. If brittle, hard, damaged or leaking, replace it.

Inspect ball bearing within PTO seal for excessive play and smooth operation.

Replace PTO seal if oil seal or ball bearing is damaged.

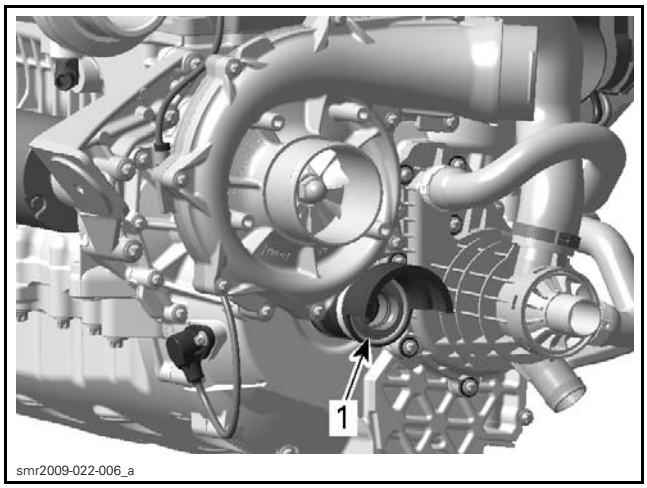

1. PTO seal

Removing the PTO Seal

Place rags under PTO housing to prevent spillage. If spillage occurs, clean immediately with PULLEY FLANGE CLEANER (P/N 413 711 809) to prevent oil stains.

Remove the Oetiker clamp retaining the seal to the PTO housing.

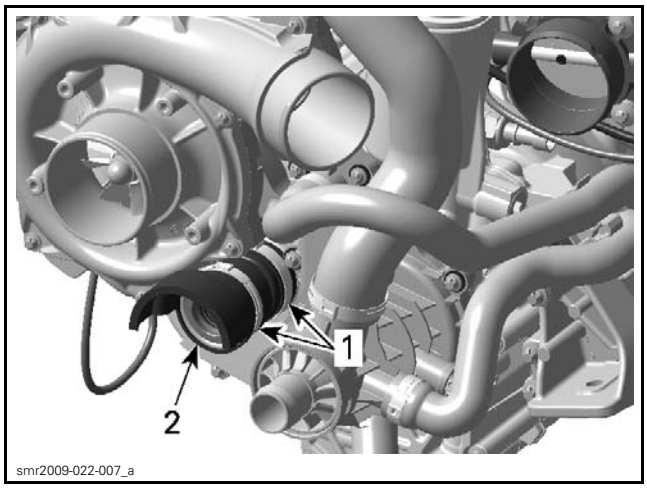

TYPICAL
1. Oetiker clamps
2. PTO seal

Pull seal from PTO housing.

Installing the PTO Seal

Insert a **NEW** Oetiker clamp over the seal.

Push seal onto PTO housing. Be sure to align seal and clamp as noted at removal.

NOTICE **When installing PTO seal on supercharged engines, make sure to position the Oetiker clamps as illustrated.**

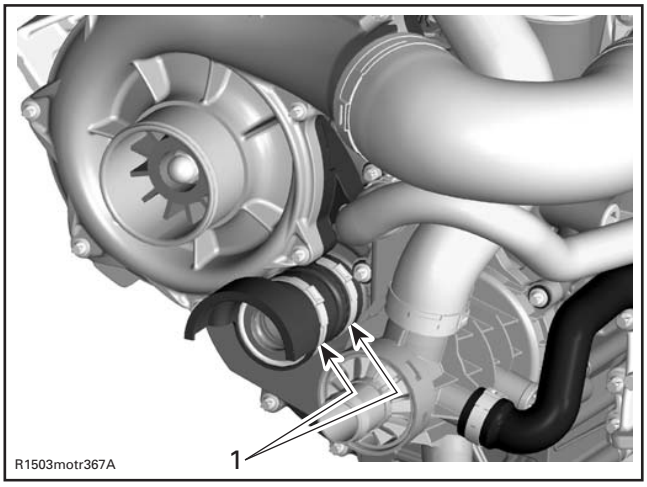

1. Oetiker clamps

Crimp Oetiker clamp.

REQUIRED TOOL	
OETIKER PLIERS (P/N 295 000 070)	

PTO COUPLING

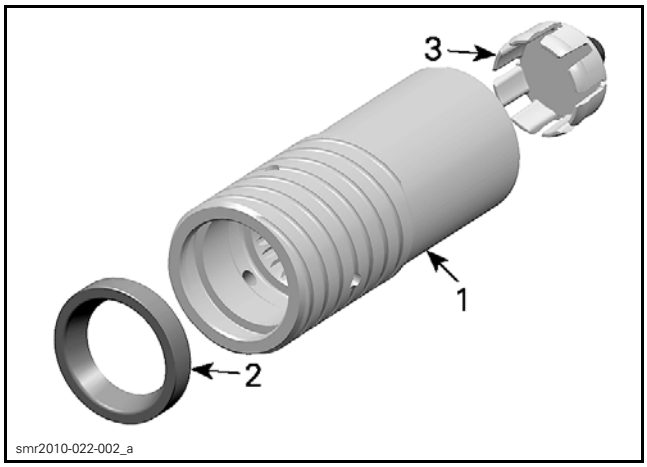

1. PTO coupling
2. Seal
3. Stop sleeve

PTO Coupling Access

Remove drive shaft, refer to *STEERING AND PROPULSION* section.

Inspecting the PTO Coupling

Inspect seal within coupling, if it is brittle, cracked or hard, replace it.

Check coupling for worn or damaged splines. Replace as required.

Removing the PTO Coupling

Lock crankshaft. Refer to *CYLINDER BLOCK* subsection for the procedure.

Remove PTO seal as described in previous procedure.

Unscrew coupling from crankshaft.

REQUIRED TOOL	
IMPELLER REMOVER/INSTALLER (P/N 529 035 820)	

NOTICE **Apply engine oil to the removal tool to protect the seal located within the PTO coupling.**

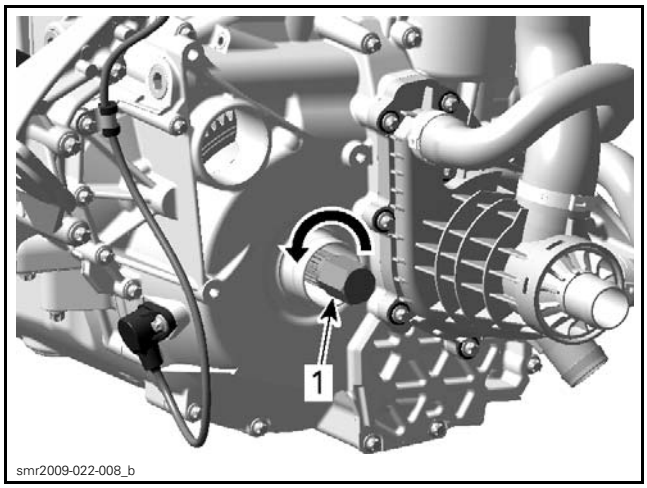

TYPICAL – TURN COUNTERCLOCKWISE TO REMOVE
1. Impeller removal tool

Installing the PTO Coupling

For installation, reverse the removal procedure. However, pay attention to the following.

TIGHTENING TORQUE	
PTO Coupling	250 N•m (184 lbf•ft) + LOCTITE 648 (GREEN) (P/N 413 711 400)

STARTER DRIVE BEARINGS

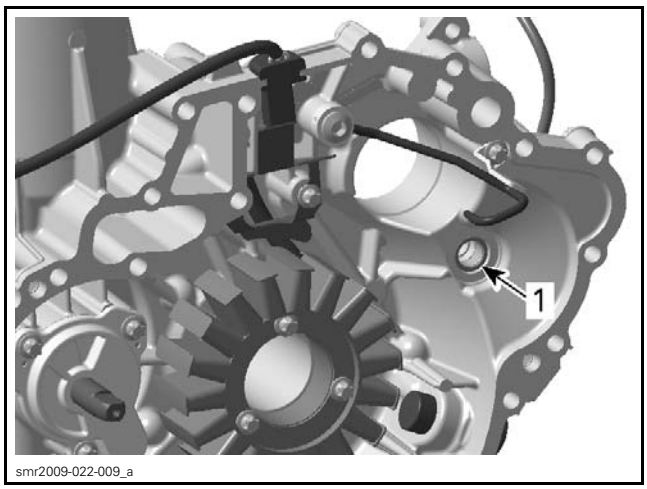

PTO HOUSING
1. Starter drive bearing

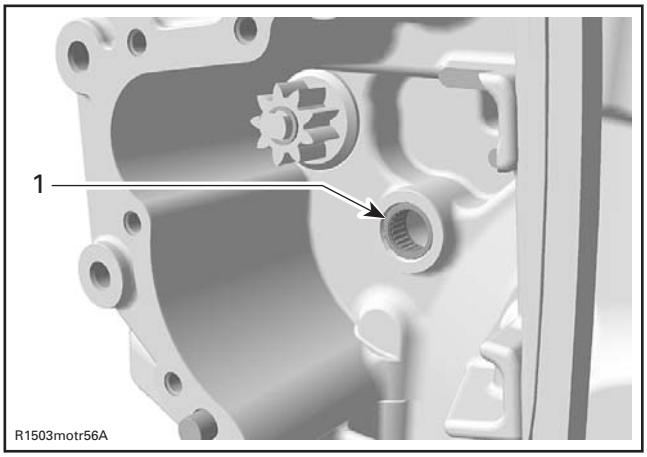

CYLINDER BLOCK
1. Starter drive bearing

Removing the Starter Drive Bearing

Remove PTO housing, see procedure in this subsection.

Remove starter drive bearing from PTO housing or cylinder block.

Installing the Starter Drive Bearing

Prior to assembly grease starter drive bearing.

STARTER DRIVE BEARING INSTALLATION
PRODUCT
ISOFLEX GREASE TOPAS NB 52 (P/N 293 550 021)

Install starter drive bearing in the PTO housing or in the cylinder block.

REQUIRED TOOLS	
STARTER DRIVE SEAL PUSHER (P/N 420 876 502)	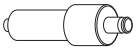
HANDLE (P/N 420 877 650)	

STATOR

Stator Connector Access

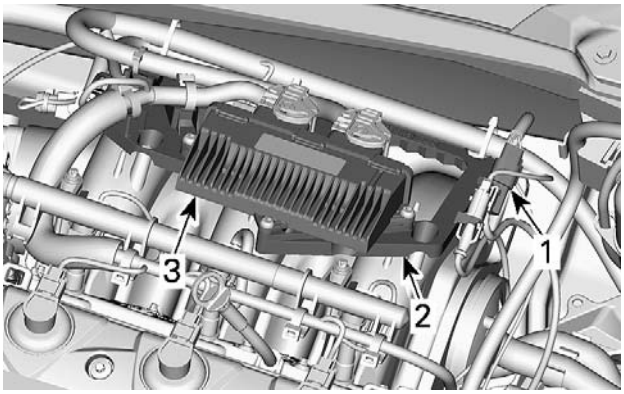

smr2011-014-002_a

155 ENGINES
1. *Magneto connector*
2. *ECM support*
3. *ECM*

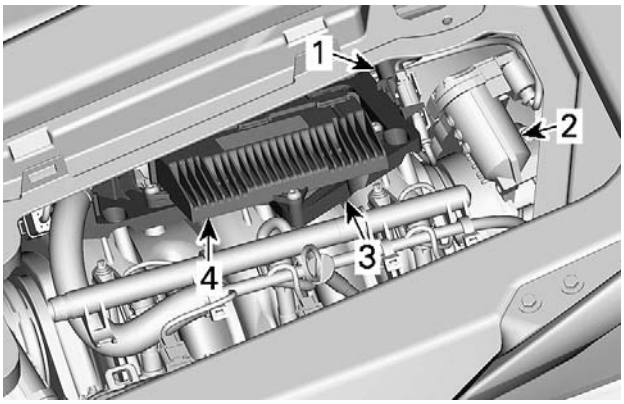

smr2011-014-003_a

215/260 ENGINES
1. *Magneto connector*
2. *Throttle body*
3. *ECM support*
4. *ECM*

Testing the Stator Continuity

Disconnect the stator connector. Refer to *STATOR CONNECTOR ACCESS* in this subsection.

Install the following harness adapter onto the magneto connector.

NOTE: Do not connect the magneto harness adapter to the vehicle harness connector.

REQUIRED TOOL	
3-PIN MAGNETO HARNESS ADAPTER (P/N 529 036 016)	

Connect multimeter between each pair of YELLOW wires.

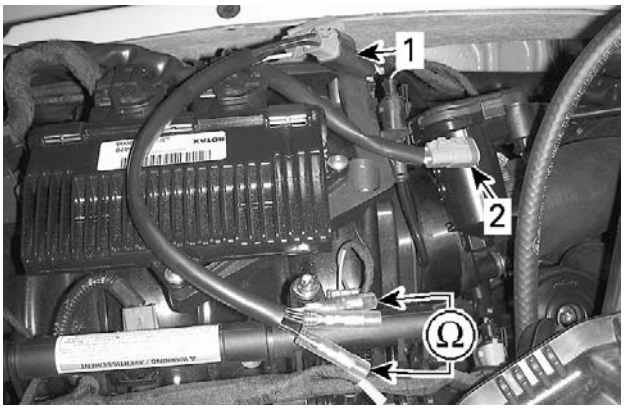

smr2009-022-101_b

STATOR CONTINUITY TEST
1. *Connect adapter to stator connector*
2. *Leave vehicle harness disconnected*

Read resistance.

STATOR CONTINUITY TEST	
TERMINAL	RESISTANCE @ 20°C (68°F)
1 and 2	0.1 - 1 Ω
1 and 3	
2 and 3	

If any result is out of specification, replace stator.

Testing the Stator Insulation

Disconnect the magneto connector. Refer to *STATOR CONNECTOR ACCESS* in this subsection.

Install the harness adapter onto the stator connector.

NOTE: Do not connect the magneto harness adapter to the vehicle harness connector.

REQUIRED TOOL	
3-PIN MAGNETO HARNESS ADAPTER (P/N 529 036 016)	

Connect multimeter between any YELLOW wire and engine ground.

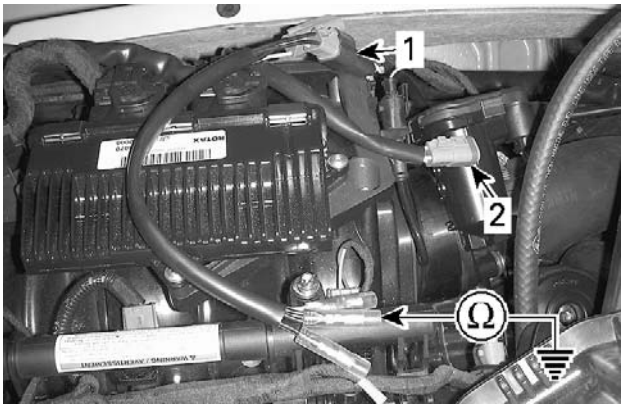

smr2009-022-101_c

STATOR INSULATION TEST
1. *Connect adapter to stator connector*
2. *Leave vehicle harness disconnected*

Read resistance.

STATOR INSULATION TEST	
TERMINAL	RESISTANCE @ 20°C (68°F)
Any YELLOW wire and engine ground	Infinity (open circuit)

If there is a resistance or continuity to engine ground, the stator coils and/or the wiring is grounded and need to be repaired or replaced.

Removing the Stator

Remove PTO housing, see procedure in this subsection.

Remove stator cable holding plate from PTO housing.

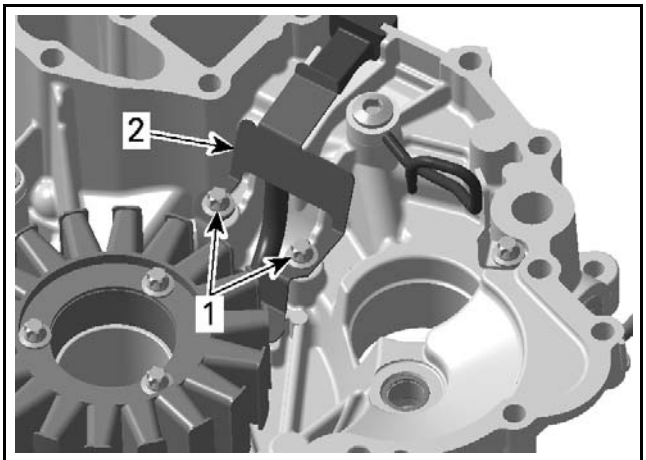

smr2009-022-011_a

TYPICAL
1. *Screws*
2. *Holding plate*

Remove stator retaining screws.

Remove stator from PTO housing.

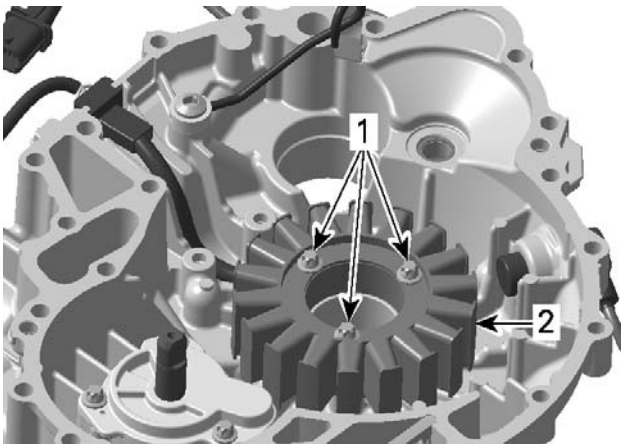

smr2009-022-012_a

1. *Stator screws*
2. *Stator*

Clean cable grommet from sealing compound.

Installing the Stator

For installation, reverse the removal procedure. However, pay attention to the following.

NOTE: There is only one position for the stator (notch in the housing).

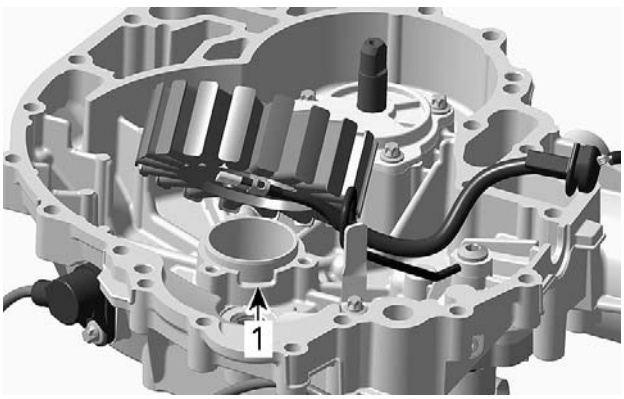

smr2010-022-013_a

1. *Notch for stator*

Place the stator cable rubber grommet in the notch provided in the PTO housing.

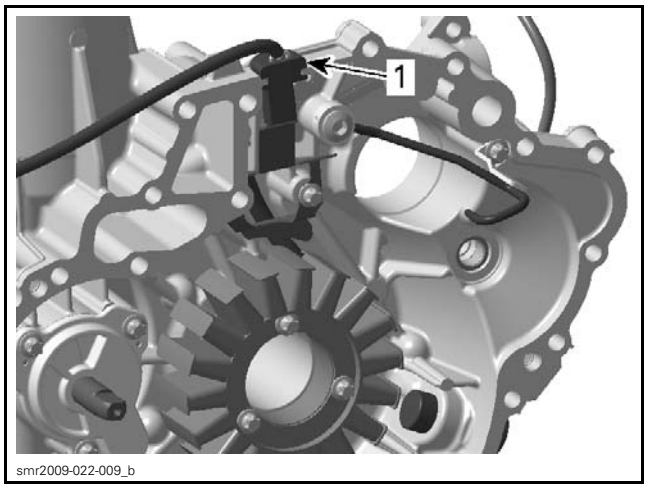

TYPICAL
1. Stator cable grommet

Apply threadlocker and torque stator and cable holding plate screws as per following table.

TIGHTENING TORQUE	
Stator and cable holding plate	9 N•m (80 lbf•**in**) + LOCTITE 243 (BLUE) (P/N 293 800 060)

Install PTO housing as per procedures in this subsection.

ROTOR AND TRIGGER WHEEL

Rotor and Trigger Wheel Access

Remove PTO housing, see procedure in this subsection.

Inspecting the Rotor and the Trigger Wheel

Inspect rotor and trigger wheel condition. Pay particular attention to the inside of the rotor for:

– Cracks
– Rub marks
– Discoloration.

If damaged, replace faulty part.

Check the trigger wheel for bent teeth using the following procedure.

1. Install a dial indicator on crankcase casting.
2. Position the gauge on a tooth and set it to zero (0). Be sure to lock the indicator dial to prevent movement of the dial during the remainder of the procedure.
3. Mark the first measured tooth (reference tooth).
4. Gently lift the gauge contact point off the tooth and rotate the rotor to the next tooth.

NOTE: When lifting contact point off the tooth for rotor rotation, be careful not to move gauge position or test readings taken on next tooth will not be accurate with reference to the reference tooth.

5. Gently set the gauge contact point on the next tooth and read the dial indicator.
6. Repeat this procedure taking a reading at each tooth.
7. Recheck reading on reference tooth to ensure gauge has not changed position (gauge should still read zero).

TRIGGER WHEEL TEETH INSPECTION
MAXIMUM ALLOWABLE DIFFERENCE
0.15 mm (.006 in)

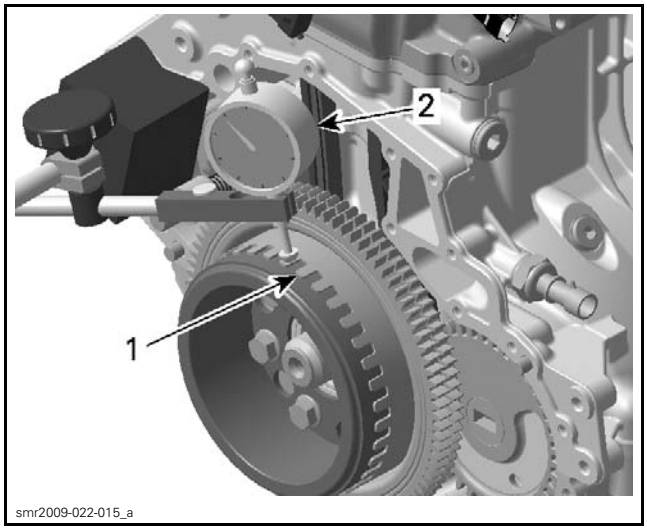

1. Trigger wheel
2. Dial indicator

If the reading exceeds the maximum allowable tolerance, straighten the tooth or replace the trigger wheel.

8. Properly reinstall PTO housing.

Removing the Rotor and the Trigger Wheel

Lock crankshaft, refer to *CYLINDER BLOCK* subsection for procedure.

Remove PTO housing, see procedure in this subsection.

Remove and discard the magneto rotor retaining screws.

Pull rotor and trigger wheel off crankshaft end.

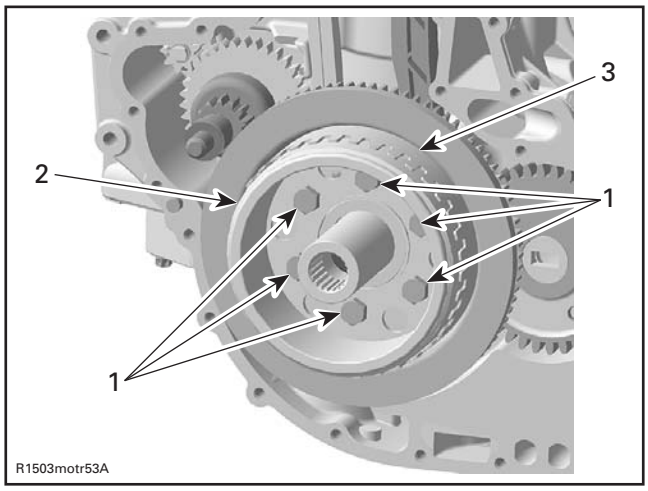

TYPICAL
1. *Rotor retaining screws*
2. *Rotor*
3. *Trigger wheel*

Installing the Rotor and the Trigger Wheel

For installation, reverse the removal procedure. However, pay attention to the following.

1. Align the trigger wheel with the location pin on the crankshaft end.
2. Install **NEW** OEM rotor screws and torque them as per following table.

NOTICE **Always install NEW OEM screws with pre-applied threadlocker. These are stretch screws that are one time use only. Not replacing rotor screws may lead to engine damage and failure.**

NOTE: Always perform step A on all rotor screws before going to the step B.

ROTOR SCREWS TIGHTENING PROCEDURE	
STEP A	15 N•m ± 1 N•m (133 lbf•**in** ± 9 lbf•**in**)
STEP B	Additional 50° ± 5°

RING GEAR

Removing the Ring Gear

Lock crankshaft. Refer to *CYLINDER BLOCK* subsection for procedure.

Remove the PTO housing, see procedure in this subsection.

Remove and discard the magneto rotor retaining screws.

Pull rotor, trigger wheel, and ring gear off crankshaft end.

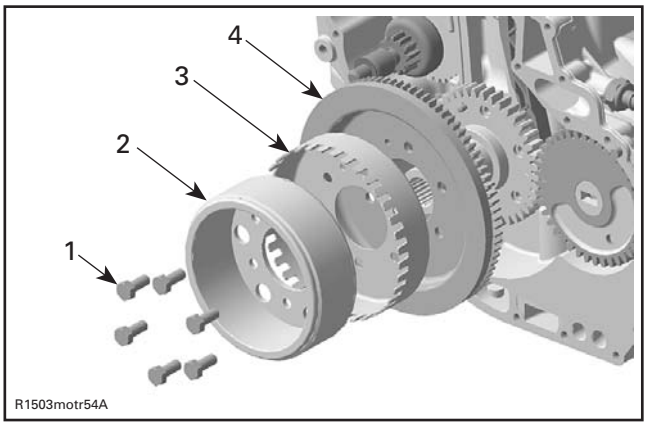

TYPICAL
1. *Magneto rotor retaining screws*
2. *Rotor*
3. *Trigger wheel*
4. *Ring gear*

Inspecting the Ring Gear

Inspect ring gear for damages. Pay particular attention to teeth condition. If badly worn, cracked, or broken teeth are found, replace ring gear.

Installing the Ring Gear

For installation, reverse the removal procedure. However, pay attention to the following.

Align the ring gear and trigger wheel with the location pin on the crankshaft end.

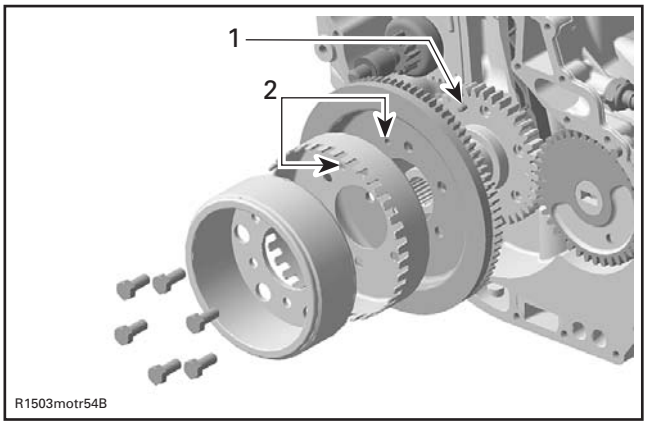

TYPICAL
1. *Location pin*
2. *Location pin holes*

Install **NEW OEM** rotor screws and torque them as per following table.

NOTICE **Always install NEW OEM screws with pre-applied threadlocker. These are stretch screws that are one time use only. Not replacing rotor screws may lead to engine damage and failure.**

NOTE: Always perform step A on all rotor screws before going to the step B.

ROTOR SCREWS TIGHTENING PROCEDURE	
STEP A	15 N•m ± 1 N•m (133 lbf•**in** ± 9 lbf•**in**)
STEP B	Additional 50° ± 5°

STARTER DRIVE

Removing the Starter Drive

Remove the PTO housing and ring gear as described in this subsection.

Remove starter drive.

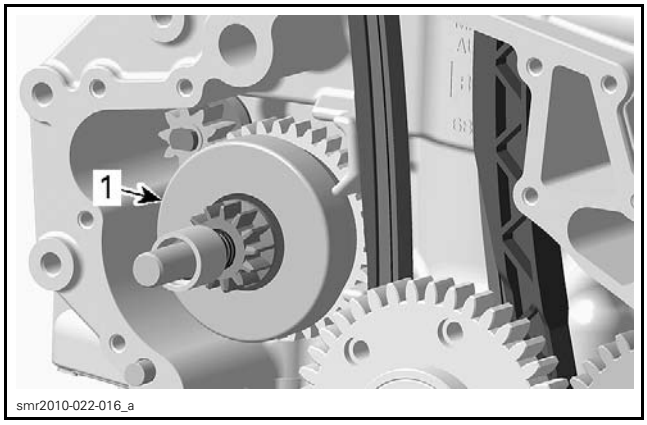

1. Starter drive

NOTICE Be careful not to lose the spring discs and thrust washer located on the starter drive shaft.

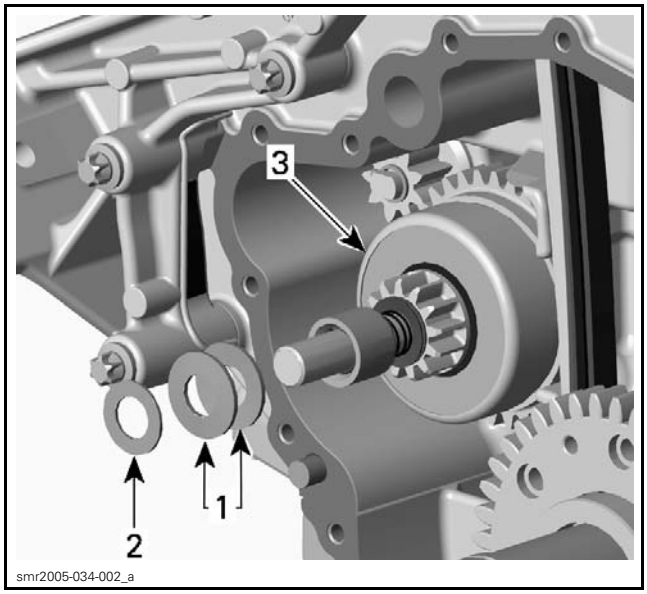

1. Spring discs
2. Thrust washer
3. Starter drive

Inspecting the Starter Drive

Inspect all starter drive parts for excessive wear, cracks and other defects. Pay attention to the condition of the drive gear teeth.

Ensure proper operation of the starter drive sprag clutch.

If any part of the assembly shows signs of abnormal wear, cracks, broken teeth or malfunction (sprag clutch), replace the faulty part.

Installing the Starter Drive

For installation, reverse the removal procedure. However, pay attention to the following.

Position the spring discs and thrust washer onto the starter drive shaft as per following illustration.

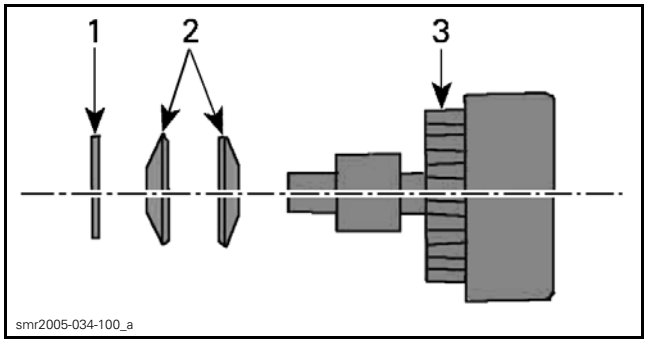

TYPICAL
1. Thrust washer
2. Spring discs
3. Starter drive

When installing a new starter drive, oil the shaft, gear teeth and splines with engine oil.

Apply ISOFLEX GREASE TOPAS NB 52 (P/N 293 550 021) on the starter drive bearings located in the cylinder block and in the PTO housing.

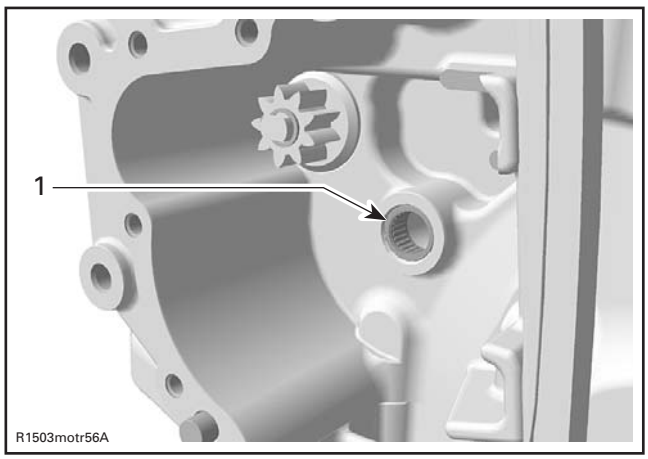

CYLINDER BLOCK
1. Starter drive bearing

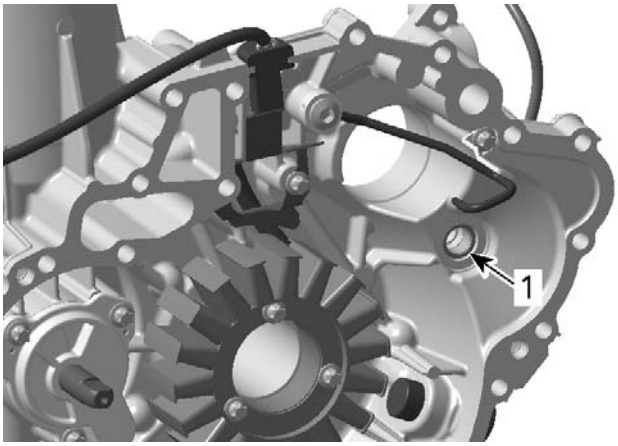

PTO HOUSING
1. Starter drive bearing

NOTICE Be sure not to forget the spring discs and thrust washer on the starter drive shaft when reassembling.

STARTER

Testing the Starter (Quick Test)

To easily bypass the starter solenoid and the start control circuits, proceed as follows.

– Use a fully charged 12 V battery with a capacity of at least 30 A-h.
– Use a set of booster cables to power the starter.

This procedure tests the following:

– Electric starter
– Starter power cable
– Battery to engine ground cable.

⚠ WARNING

Fuel, oil, or electrolyte vapors are flammable and may become explosive if certain conditions are met. These vapors may collect near the bottom of the hull when present. All types of ignition including electrical sparks are to be avoided when maintaining or testing vehicle.

⚠ WARNING

Always wear safety glasses when working with or around batteries. Be sure to leave the booster battery out of the watercraft.

1. Connect booster cables in this strict order:
2. Connect one **RED** clip to the starter post on the starter solenoid.
3. Connect the other **RED** clip to the positive (+) terminal on the external battery.
4. Connect one **BLACK** clip to the negative (-) battery terminal in the **vehicle**.
5. Momentarily apply the second **BLACK** clip to the negative (-) terminal of the **external** battery.

⚠ WARNING

Always use an external battery for this test to prevent any electrical sparks from occurring within the hull. Always make the final connection to the external battery negative (-) terminal using the BLACK booster cable clip. Do not short starter solenoid contacts across the main power connections on the relay with a tool that would cause electrical sparks. Failure to follow this procedure may result in an explosion.

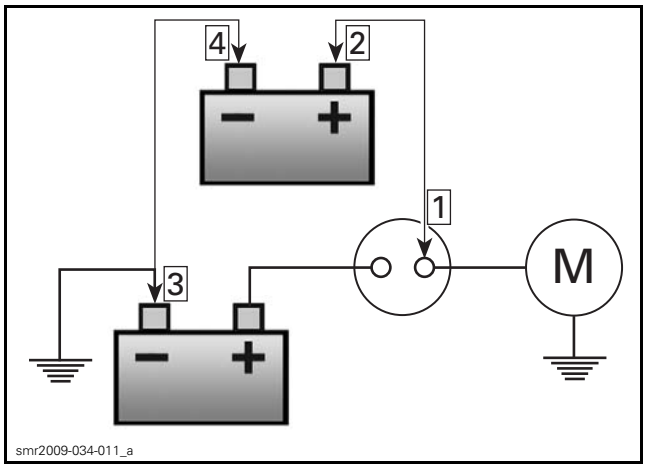

Step 1: Connect cable to solenoid starter post
Step 2: Connect cable to external battery positive post
Step 3: Connect cable to vehicle battery negative post
Step 4: Make a momentary contact

If engine does not crank (or cranks slowly), check the following:

– Booster cable connections
– Vehicle battery ground cable connections to engine
– Starter power cable/connections from solenoid to starter
– Carry out a dynamic test of the solenoid, refer to *STARTING SYSTEM (1503 4-TEC)*.

If the above items all test good, replace the starter.

Removing the Starter

1. Open or remove seat.

Models with Suspension

2. Remove deck extension. Refer to *BODY (GTX_RXT AND WAKE PRO SERIES)*.
3. Lower moving deck.

All Models

4. Remove air intake silencer. Refer to *AIR INTAKE SYSTEM* subsection.
5. Disconnect battery. Refer to *CHARGING SYSTEM* subsection.

NOTE: For better access to the starter, work from RH side and lay across the watercraft.

6. Disconnect starter power cable.
7. Remove starter retaining screws.

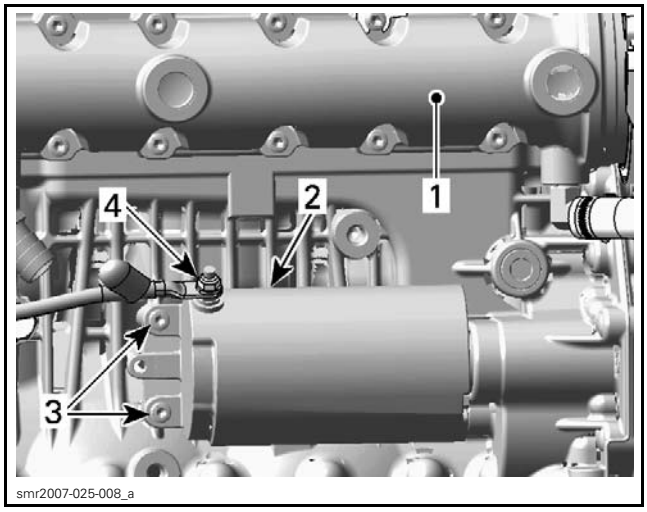

TYPICAL — REAR OF WATERCRAFT IN ON RH SIDE OF ILLUSTRATION
1. Exhaust manifold
2. Starter
3. Starter retaining screws
4. Starter power cable retaining nut

Removing the Starter Gear

1. Remove starter.
2. Remove gear retaining circlip and pull out starter gear.

1. Retaining circlip
2. Starter gear

Installing the Starter Gear

Installation is the reverse of removal procedure. However, pay particular attention to the following.

Use a new circlip.

Installing the Starter

Installation is the reverse of the removal procedure. However, pay particular attention to the following.

1. Ensure starter and engine mating surfaces are free of debris. Serious problems may arise if starter is not properly aligned.
2. Apply ISOFLEX GREASE TOPAS NB 52 (P/N 293 550 021) on starter O-rings.

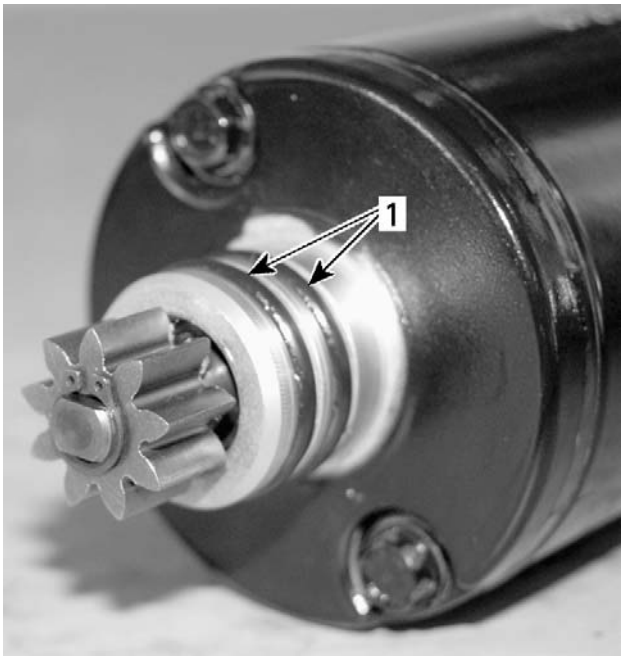

1. *Apply Isoflex grease Topas NB 52*

3. Install starter.

TIPS TO MESH STARTER GEAR WITH INTERMEDIATE GEAR
When starter does not mesh: – Pull starter out – Temporarily remove O-rings from starter – Slightly rotate starter gear – Reinstall starter
If it still does not mesh: – Pull starter out. – Slightly rotate starter gear – Reinstall starter – Repeat these steps until it meshes
When it meshes: – Pull starter out. – Be careful not to rotate starter gear out of position – Reinstall O-rings to starter – Reinstall starter

TIGHTENING TORQUE	
Starter retaining screws	10 N•m (89 lbf•**in**) + LOCTITE 243 (BLUE) (P/N 293 800 060)
RED positive cable nut	7 N•m (62 lbf•**in**)

⚠ WARNING

To prevent electric shock whenever connecting the RED power cable to the starter motor, ensure the BLACK (-) battery cable is disconnected.

4. Apply DIELECTRIC GREASE (P/N 293 550 004) on terminal and nut.
5. Install rubber protector over starter power cable retaining nut.

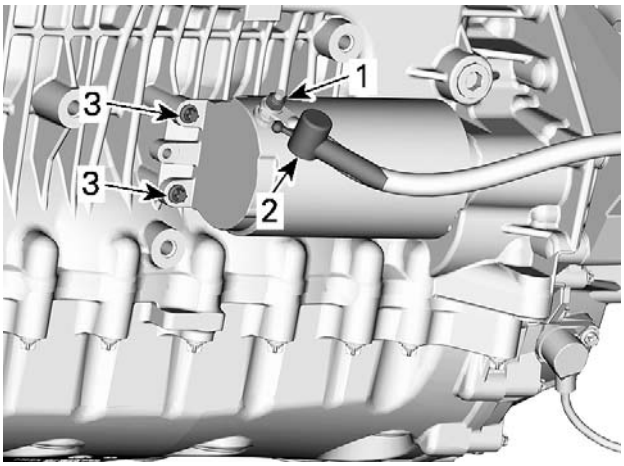

1. *Power cable retaining nut*
2. *Rubber protector*
3. *Starter retaining screws*

6. Reinstall all remaining removed parts.

INTAKE MANIFOLD

SERVICE PRODUCTS

Description	Part Number	Page
LOCTITE 243 (BLUE)	293 800 060	7

155 Engines (Models Without Suspension)

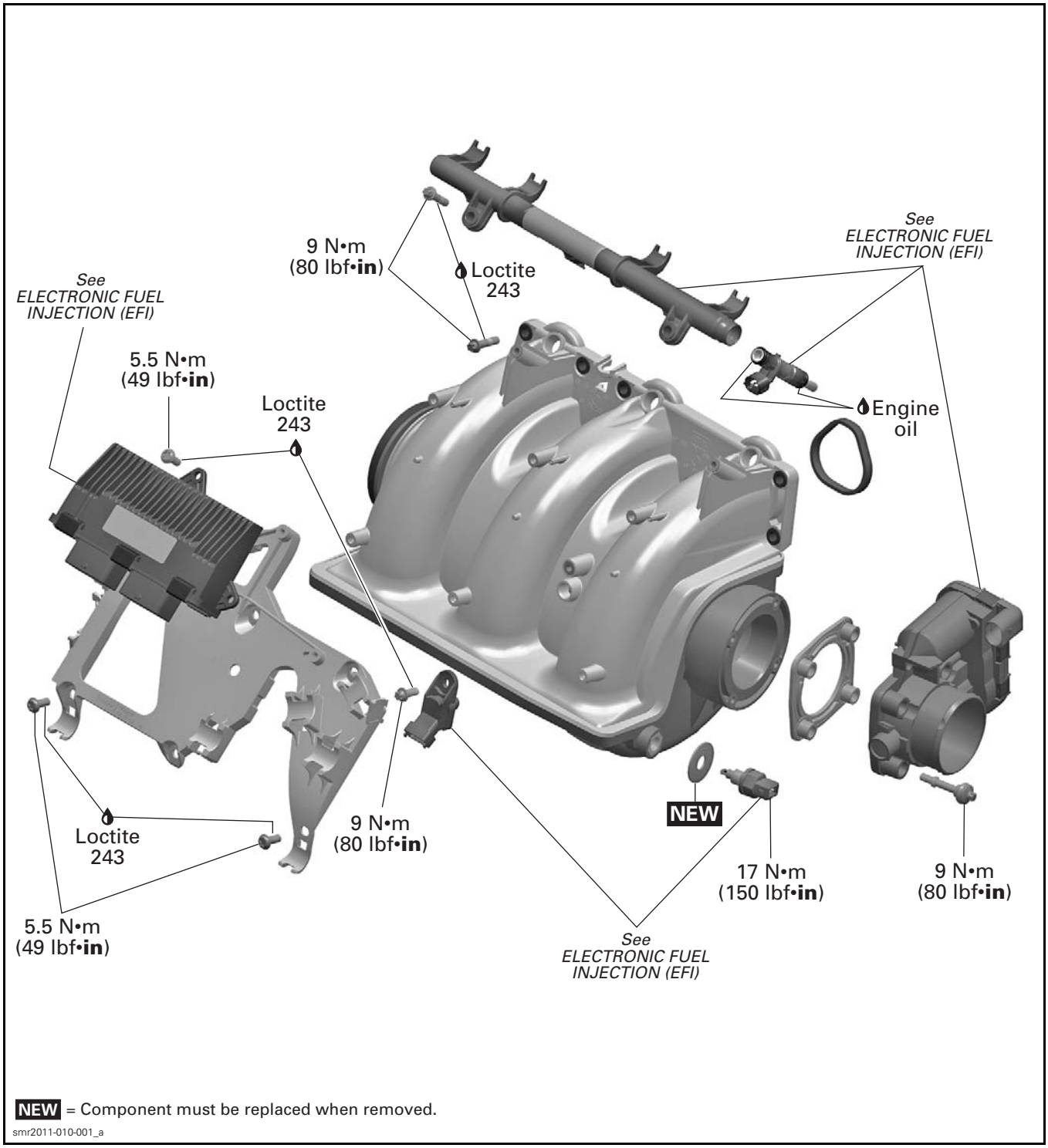

215 Engine

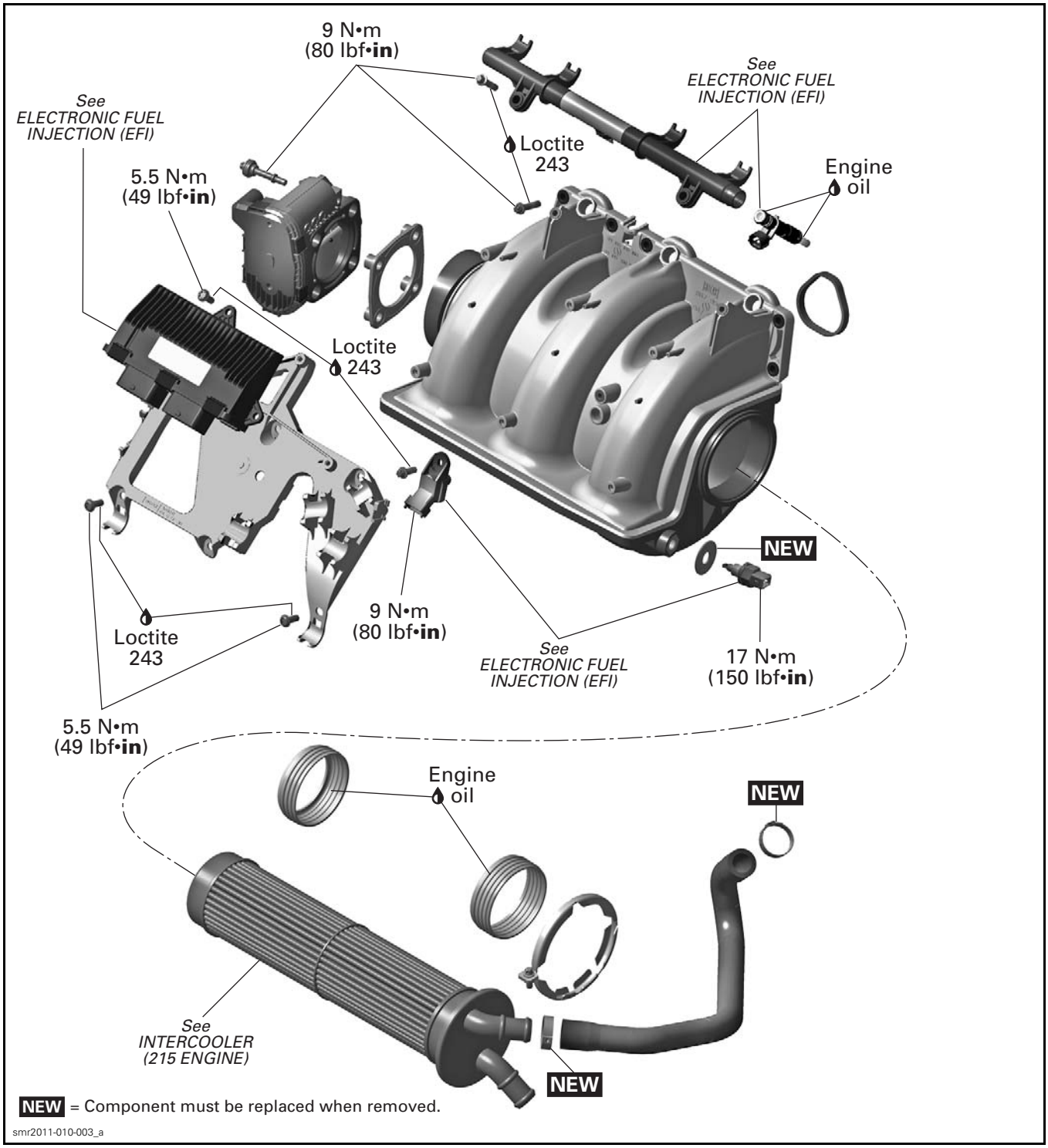
9 N•m
(80 lbf•in)
See
ELECTRONIC FUEL
INJECTION (EFI)
See
ELECTRONIC FUEL
INJECTION (EFI)
Loctite
243
Engine
oil
5.5 N•m
(49 lbf•in)
Loctite
243
NEW
Loctite
243
9 N•m
(80 lbf•in)
See
ELECTRONIC FUEL
INJECTION (EFI)
17 N•m
(150 lbf•in)
5.5 N•m
(49 lbf•in)
Engine
oil
NEW
See
INTERCOOLER
(215 ENGINE)
NEW
NEW = Component must be replaced when removed.
smr2011-010-003_a

155 Engine (Models with Suspension) and 260 Engines

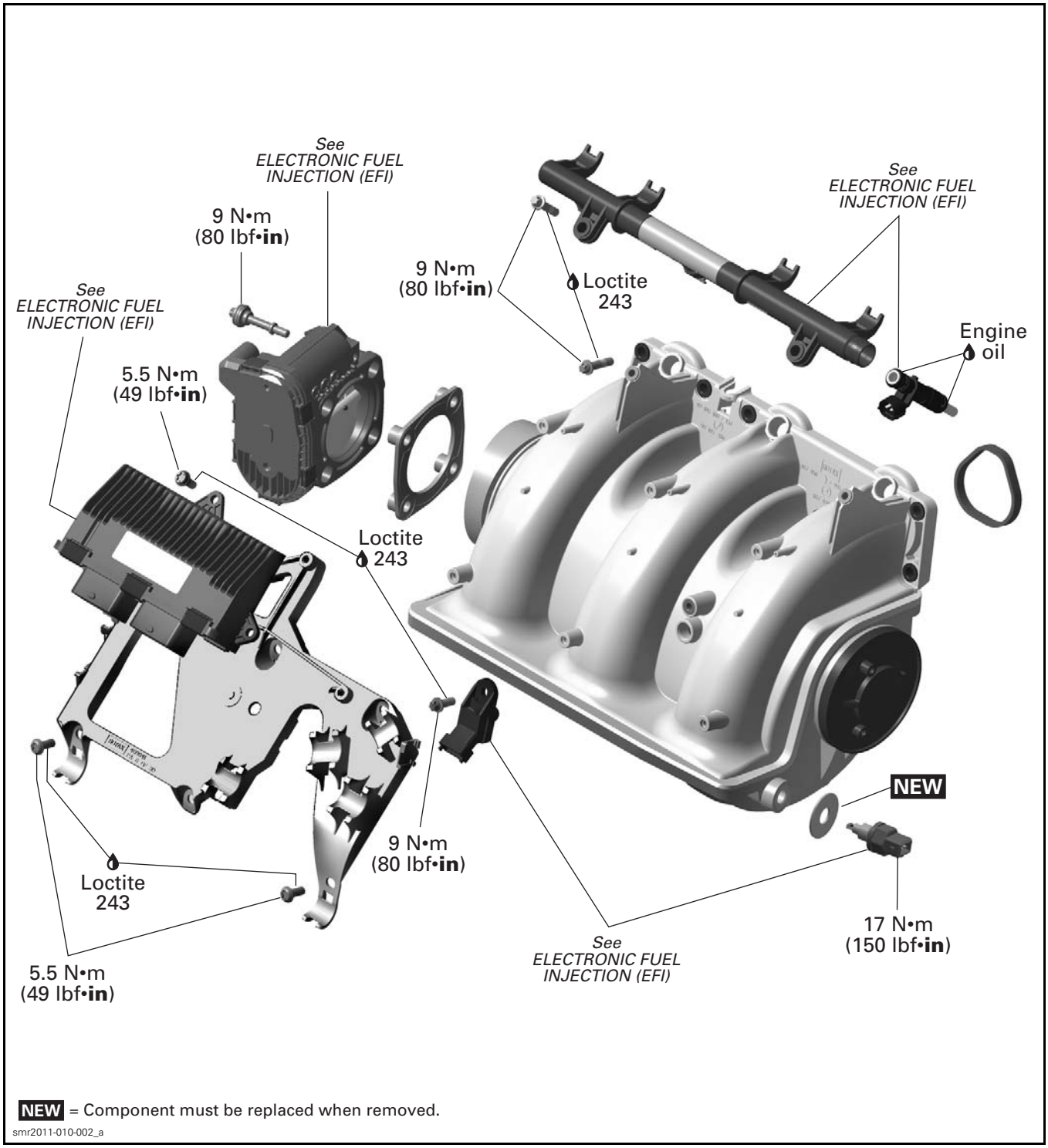

NEW = Component must be replaced when removed.

smr2011-010-002_a

PROCEDURES

INTAKE MANIFOLD

Removing the Intake Manifold

Models with Suspension

Remove the air intake silencer. Refer to *AIR INTAKE SYSTEM (MODELS WITH SUSPENSION)* subsection.

All Models

Disconnect the intake hose at intake manifold.

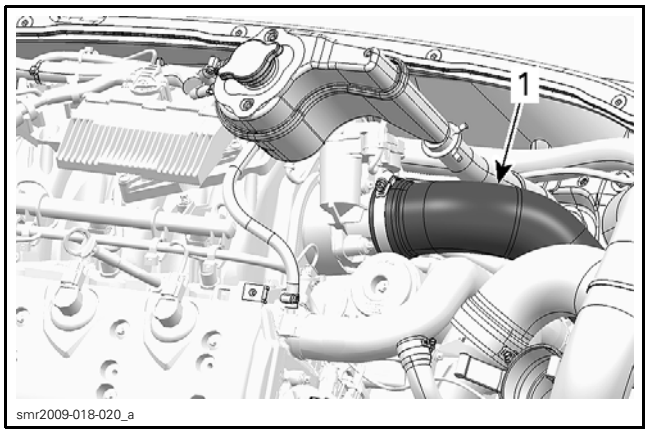

TYPICAL – SUPERCHARGED ENGINE SHOWN
1. Intake hose

Move the coolant expansion tank aside to make room.

Remove the oil dipstick.

On some models, remove the engine cover. Press tabs on both sides to remove the cover.

Disconnect fuel hose connector at fuel rail. Refer to *ELECTRONIC FUEL INJECTION (EFI)* subsection.

Unplug the "B" connector from the ECM by pulling the lock. Refer to *CONNECTOR INFORMATION* subsection for procedure.

Cut all locking ties securing the wiring harnesses to the intake manifold.

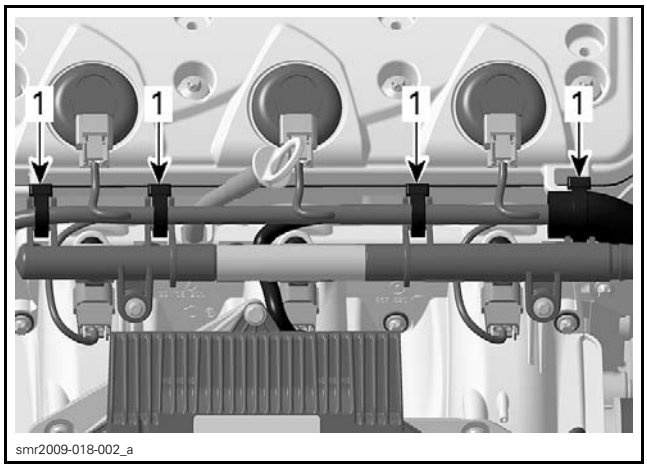

1. Cut these locking ties to release harness

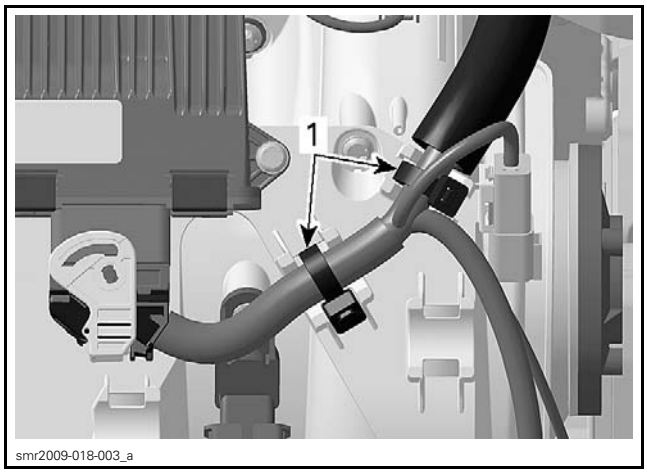

1. Cut these locking ties to release harness

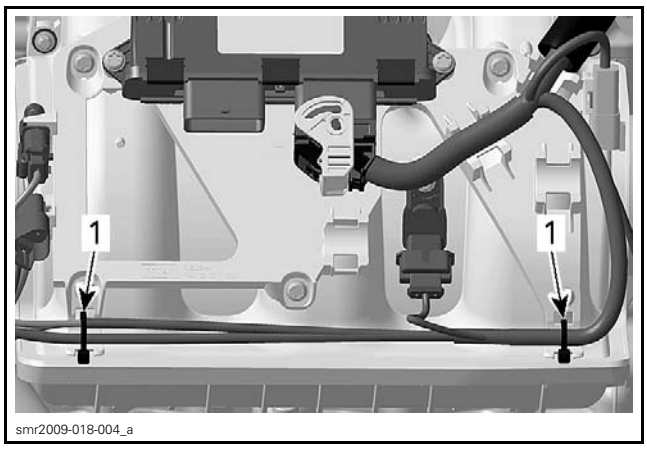

1. Cut these locking ties to release harness

Unplug the ignition coil and fuel injector connectors.

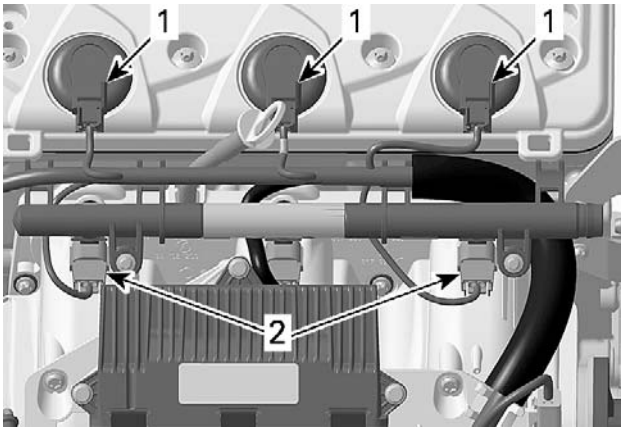

smr2009-018-005_a

1. *Ignition coil connectors*
2. *Fuel injector connectors*

Unplug the manifold air pressure sensor (MAPS), the engine connector and the manifold air temperature sensor (MATS).

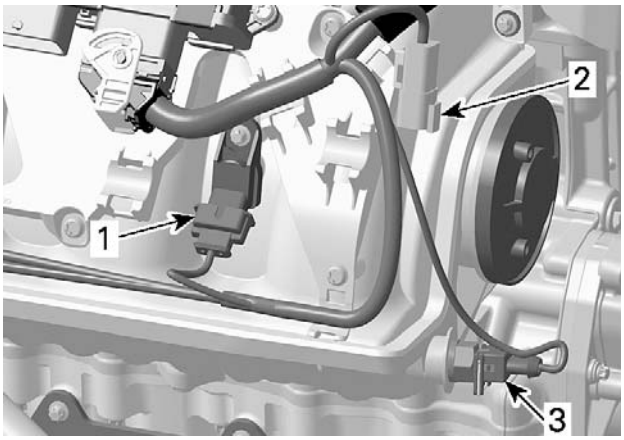

smr2009-018-007_a

TYPICAL
1. *MAPS connector*
2. *Engine connector location*
3. *MATS connector*

Detach the engine connector housing from the ECM support.

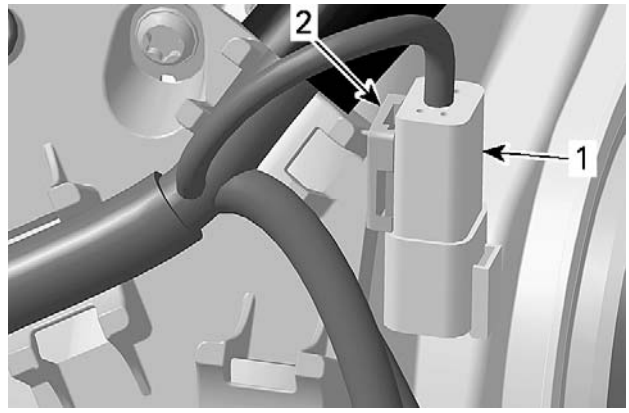

smr2009-018-008_a

1. *Engine connector*
2. *ECM support*

Unplug the knock sensor (KS), the magneto and the throttle actuator connectors.

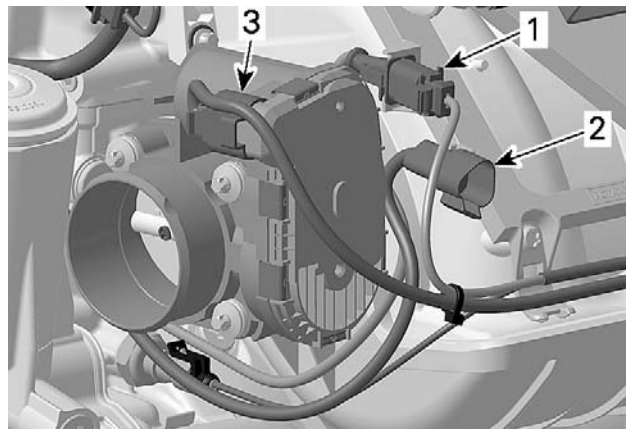

smr2009-018-009_a

1. *KS connector*
2. *Magneto connector location*
3. *Throttle actuator connector*

Detach the knock sensor (KS) and magneto connector housings from the ECM support. For more details, refer to *CONNECTOR INFORMATION* subsection.

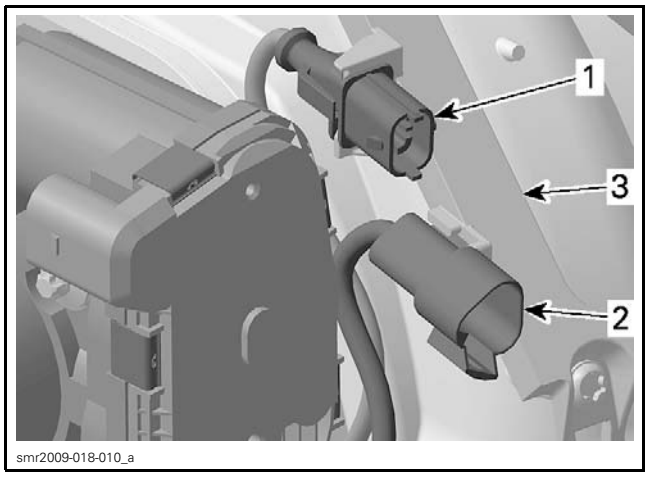

1. *KS connector*
2. *Magneto connector*
3. *ECM support*

Unplug the oil pressure switch (OPS).

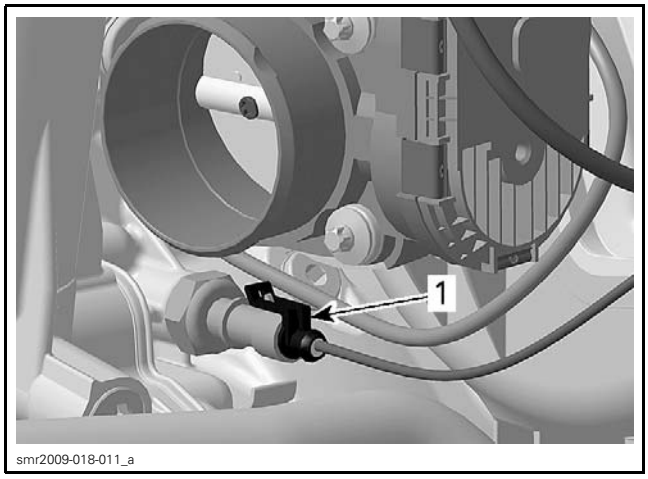

1. *Oil pressure switch (OPS)*

Unscrew ECM retaining screws and remove ECM from its support.

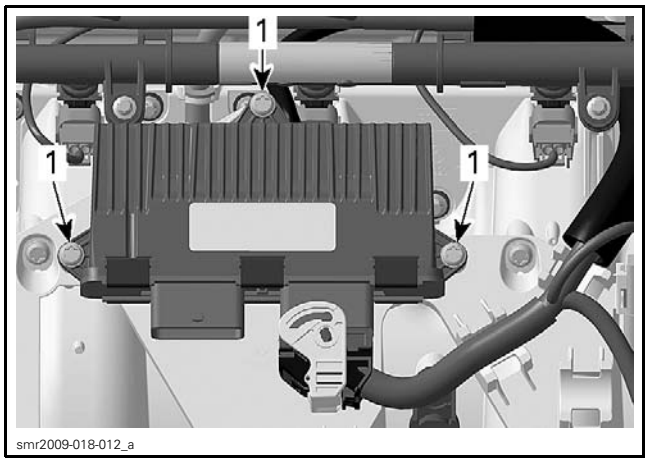

1. *ECM retaining screws*

Pull the engine wiring harness with the ECM plugged away from intake manifold.

On **215 engine**, disconnect both hoses at the front end of intercooler.

Remove manifold retaining screws and push the oil dipstick tube out of the manifold slot.

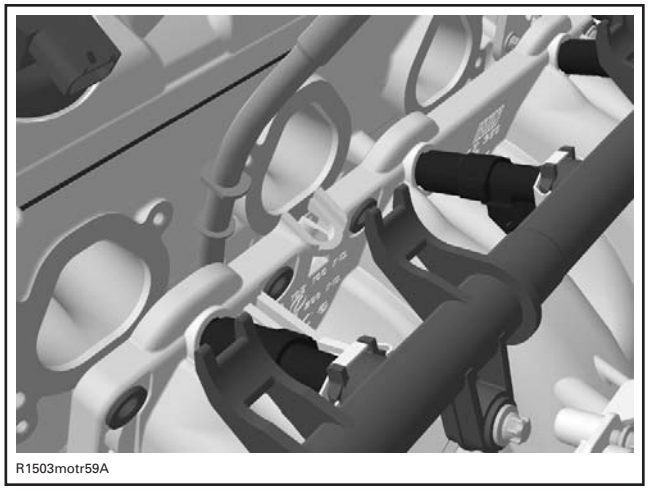

Lift intake manifold up to pull it out of the mounting brackets.

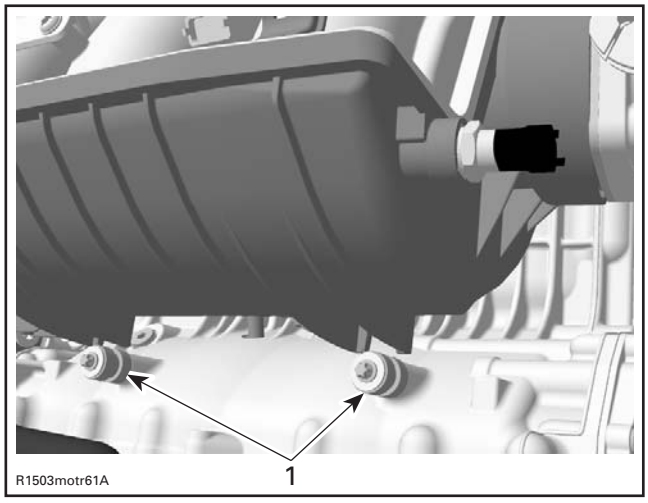

1. *Mounting brackets*

Pull intake manifold out.

Inspecting the Intake Manifold

Check intake manifold for cracks, warping at flanges or any other visible damage.

Check if intake manifold gaskets are cracked, brittle or otherwise damaged.

Replace damaged parts as necessary.

Installing the Intake Manifold

For installation, reverse the removal procedure. Pay attention to following details.

Ensure that all gaskets are properly installed and in good condition.

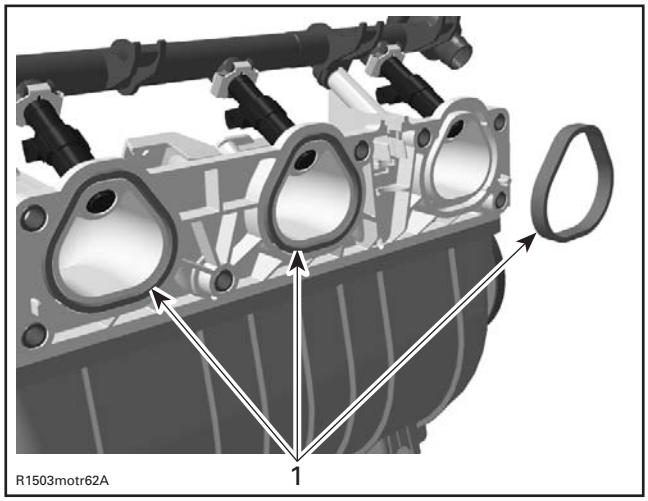

INTAKE MANIFOLD
1. Gaskets

First, position intake manifold on front mounting bracket then push manifold toward engine to then proceed with rear mounting bracket.

When installing the intake manifold, lift up the oil dipstick tube a little bit to fit in the slot of the manifold.

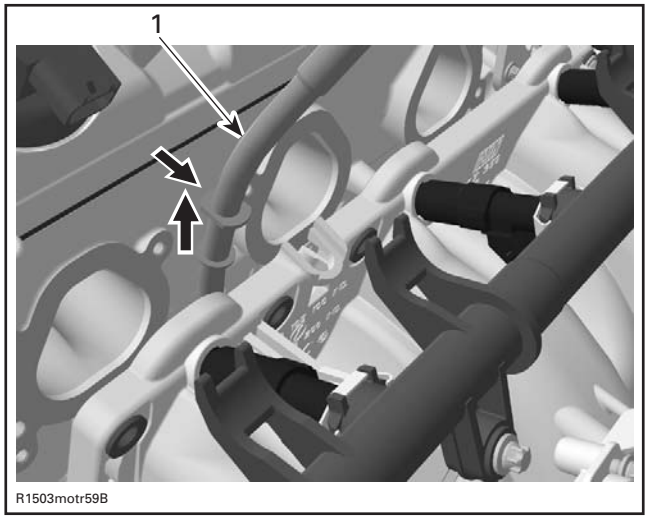

1. Oil dipstick tube

Apply LOCTITE 243 (BLUE) (P/N 293 800 060) on the intake manifold screws.

Tighten intake manifold to specification using the following sequence.

TIGHTENING TORQUE	
Intake manifold screws	9 N•m (80 lbf•**in**)

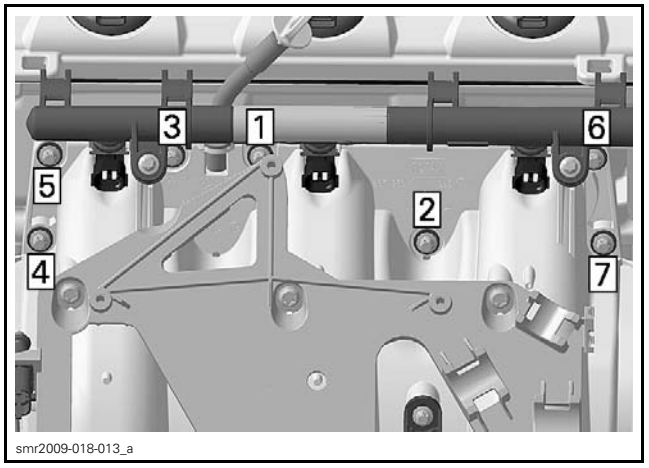

TIGHTENING SEQUENCE - INTAKE MANIFOLD SCREWS

Ensure to properly route and secure wiring harness with locking ties.

Install the ECM on its support.

TIGHTENING TORQUE	
ECM retaining screws	9 N•m (80 lbf•**in**) + LOCTITE 243 (BLUE) (P/N 293 800 060)

Install all other removed parts.

215 Engine

NOTE: Make sure the outlet hose of the intercooler is installed in its holding device (located on the oil filler tube) otherwise the hose will scuff on the engine block.

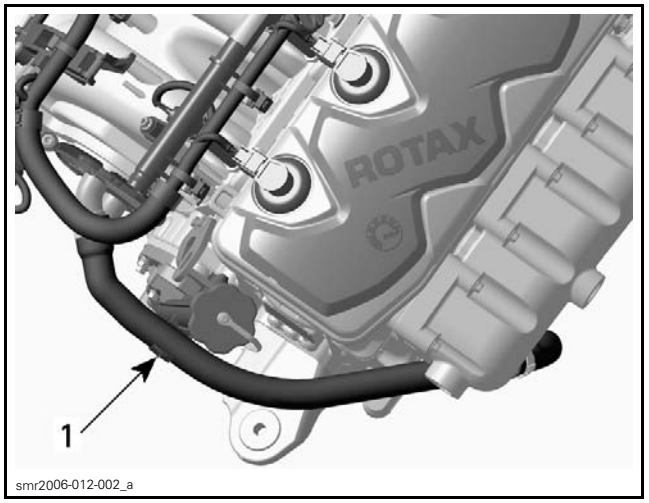

1. Intercooler outlet hose holding device

FLAME ARRESTER

Flame Arrester Location

The flame arrester is integrated in the intake manifold.

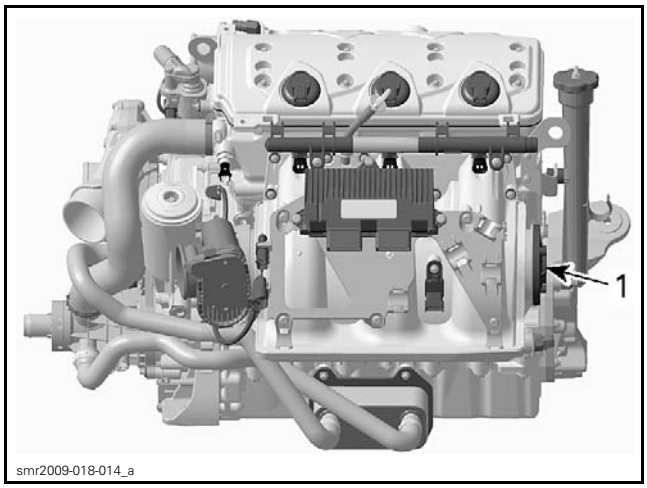

1. Flame arrester

Inspecting the Flame Arrester

The flame arrester in the intake manifold is maintenance free.

Replacing the Flame Arrester

NOTE: The flame arrester can not be removed from the intake manifold.

Replace intake manifold if necessary. Refer to *INTAKE MANIFOLD* in this subsection.

CYLINDER HEAD

SERVICE TOOLS

Description	Part Number	Page
CAMSHAFT LOCKING TOOL	529 035 839	11
DRIVE SHAFT ADAPTER	529 035 985	3
ENGINE LEAK DOWN TEST KIT	529 035 661	4
VALVE GUIDE PUSHER (6 MM)	529 036 087	20
VALVE GUIDE REMOVER (6 MM)	529 036 086	19
VALVE SPRING COMPRESSOR CUP	529 036 073	14
VALVE SPRING COMPRESSOR	529 035 724	14

SERVICE TOOLS – OTHER SUPPLIER

Description	Part Number	Page
SNAP-ON VALVE STEM SEAL PLIERS	YA8230	16

SERVICE PRODUCTS

Description	Part Number	Page
ISOFLEX GREASE TOPAS NB 52	293 550 021	12
LOCTITE 243 (BLUE)	293 800 060	10, 14
MOLYKOTE G-N	420 297 433	20

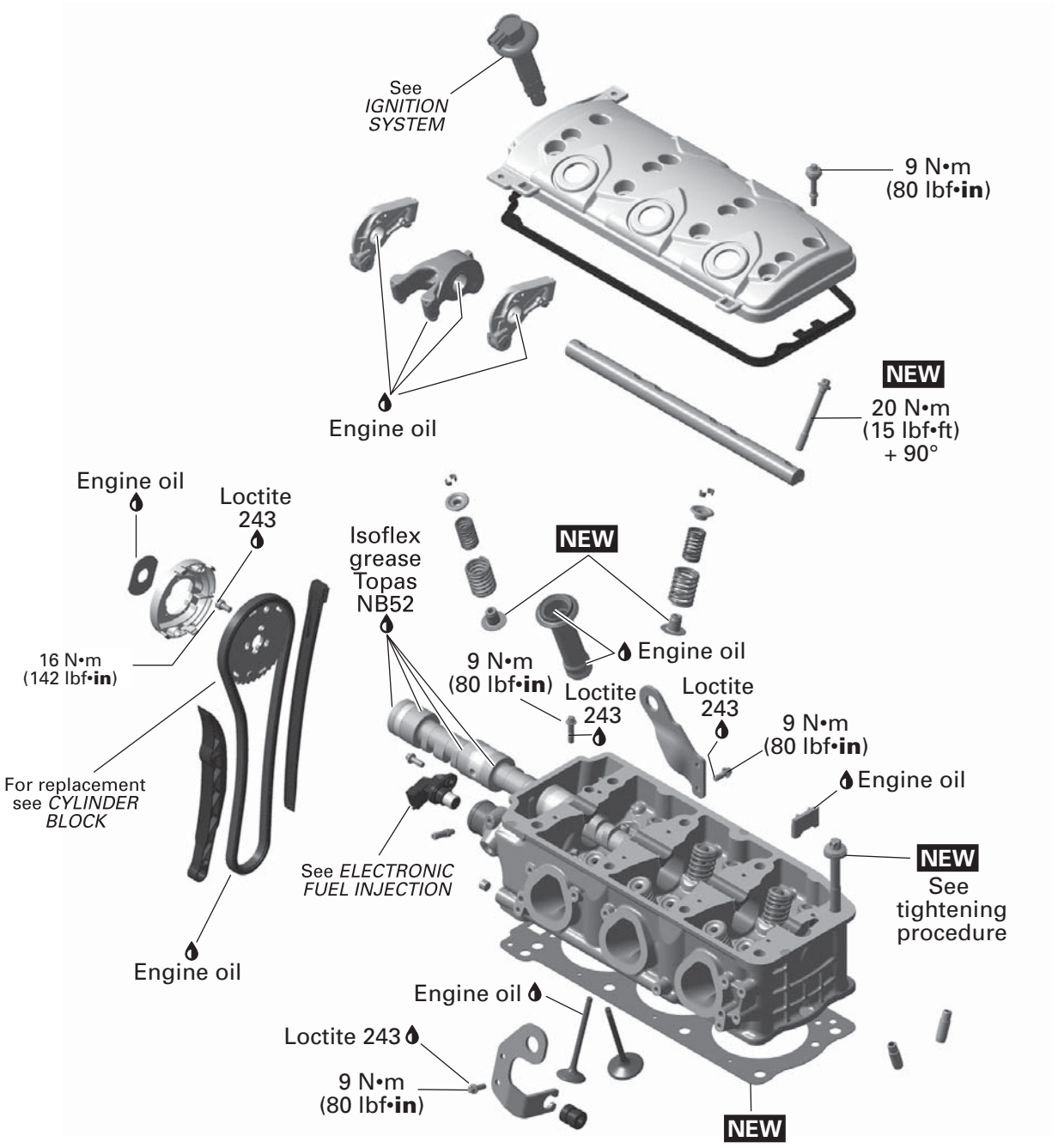

NEW = Component must be replaced when removed.

smr2016-054-001_a

GENERAL

NOTE: When diagnosing an engine problem, always perform an engine leak test. This will help pin-point a problem. Refer to *ENGINE LEAK TEST* in this subsection for procedures.

When disassembling parts that are duplicated in the engine, (e.g.: valves, bushings), it is strongly recommended to note their position and to keep them as a "group". If you find a defective component, it will be much easier to find the cause of the failure. Since parts were break-in together during the engine operation, they will keep their matched fit when parts are reassemble together within their "group".

INSPECTION

ENGINE LEAK TEST

The procedure has to be done when engine operating temperature of approximately 70°C (158°F) is reached.

⚠ WARNING

Be careful to burns when working on a hot engine.

Preparation

1. Remove any required parts to give access to engine.
2. Remove the tether cord.
3. Remove jet pump (refer to *JET PUMP* subsection).
4. Remove coolant pressure cap.

⚠ WARNING

To avoid potential burns, only remove the coolant pressure cap by wearing the appropriate safety equipment.

5. Remove oil dipstick.

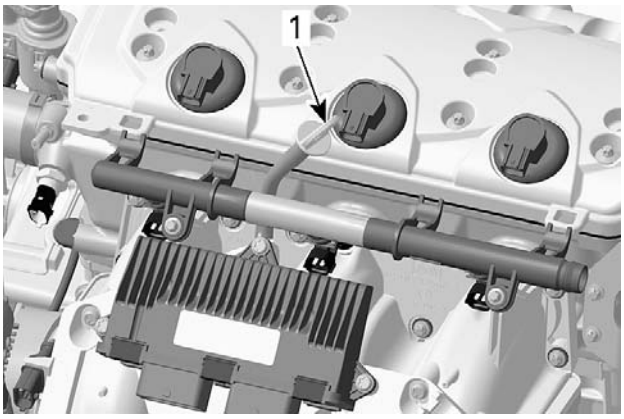

smr2009-025-002_a

1. Oil dipstick

6. Unplug and remove ignition coils.
7. Remove spark plugs.

NOTE: Ignition coil may be used as an extractor.

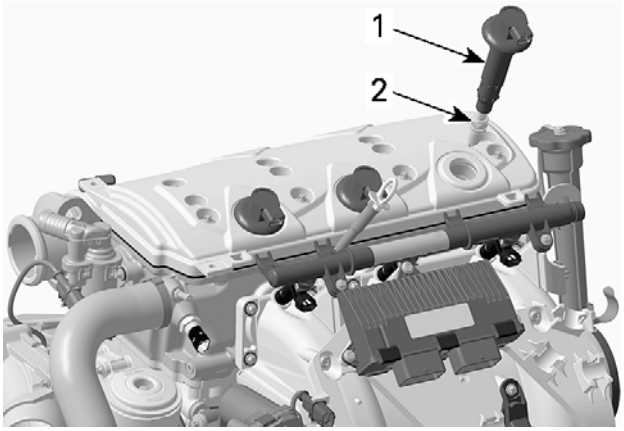

smr2009-025-003_a

1. Ignition coil
2. Spark plug

8. Remove *CYLINDER HEAD COVER*, see procedure in this subsection.
9. Install the drive shaft adapter and an appropriate wrench lever on drive shaft end.

REQUIRED TOOL	
DRIVE SHAFT ADAPTER (P/N 529 035 985)	

Leak Test Procedure

NOTE: Cylinder numbers are molded on cylinder head cover.

1. Rotate engine crankshaft counterclockwise until the cylinder 1 is at Top Dead Center (TDC) compression stroke.
   1.1 As the engine crankshaft is turned over, observe the movement of intake rocker arm of the cylinder to be checked.
   1.2 After piston completes its cycle and the intake valve closes, observe the piston.
   1.3 When it reaches its uppermost position **this is TDC compression stroke**.

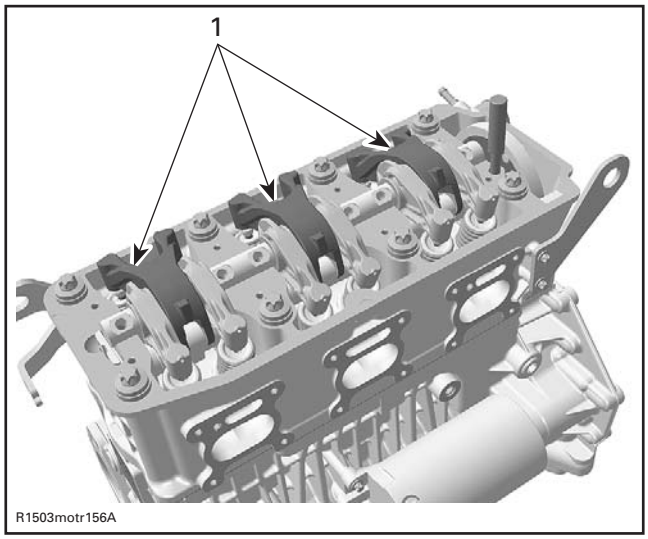

1. Intake rocker arms

2. Secure the wrench lever, at the end of the drive shaft, against hull to prevent further crankshaft rotation.
3. Install the leak down test tool.

REQUIRED TOOL	
ENGINE LEAK DOWN TEST KIT (P/N 529 035 661)	

   3.1 Install the appropriate gauge adapter into spark plug hole.
   3.2 Connect the leak down tester gauge to the gauge adapter.
   3.3 Connect to an adequate pressurized air supply.
   3.4 Set needle of measuring gauge to zero (0).

NOTE: Each tester will have specific instruction on the gauge operation and required pressure. Refer to manufacturer's instructions.

4. Supply combustion chamber with air.

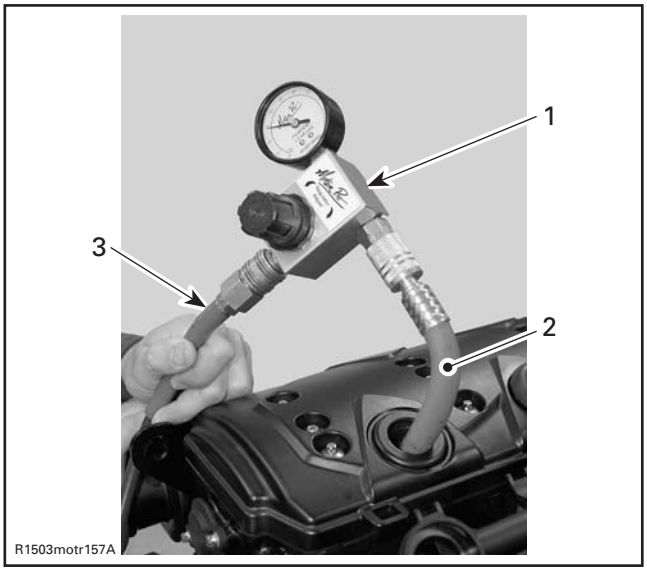

TYPICAL
1. Leak down tester gauge
2. Gauge adapter
3. Air supply hose

5. Note the amount of leaking or percentage (depending on tester).

LEAKAGE PERCENTAGE	ENGINE CONDITION
Up to 15%	Excellent condition
16% to 25%	Good condition
26% to 40%	Fair condition; engine will run and performance might be down in some cases
41% and higher	Poor condition, diagnose and repair engine

6. Proceed the same way with remaining cylinders.

Diagnostic

Pressurize area to be tested, spray soap/water solution at the indicated location and look and/or listen for air bubbles.

OBSERVATION	CAUSE
Air escaping on intake port	Leaking intake valve(s)
Air escaping on exhaust port	Leaking exhaust valve(s)
Air escaping into crankcase	Excessively worn and/or broken piston rings
Air bubbles out of coolant tank	Leaking cylinder head gasket

OBSERVATION	CAUSE
Air/water escaping from cylinder-block/head	Damaged gasket and/or loosened screws
Coolant escaping from water pump housing	Damaged gasket and/or loosened screws (refer to *COOLING SYSTEM*)
Coolant escaping from leak indicator hole	Damaged rotary seal on water pump shaft (refer to *COOLING SYSTEM*)
Oily contamination on leak indicator hole	Damaged oil seal on water pump shaft

Reassembly

For reassembly, reverse the preparation procedure. Use torque values and service products from the exploded views (refer to proper *ENGINE* subsections).

Properly install ignition coils. Refer to *IGNITION SYSTEM* subsection.

TROUBLESHOOTING

The following is provided to help in diagnosing the probable source of problems. It is a guideline and it should not be assumed to list all possible problems.

Always check for fault codes. If a fault code is detected, service the fault code first. Refer to *DIAGNOSTIC AND FAULT CODES* section.

UNUSUAL ENGINE NOISE OR VIBRATIONS

1. Incorrect camshaft timing adjustment
   - *Replace damaged components and readjust camshaft timing.*
2. Camshaft timing gear screws got loose
   - *Retighten screws with the recommended torque.*
3. Rocker arm(s) hydraulic element is broken or worn out (improper valve adjustment).
   - *Replace faulty rocker arm(s).*
4. Rocker arm screw not properly tightened
   - *Retighten screws with recommended torquing procedure.*
5. Faulty chain tensioner
   - *Replace chain tensioner.*
6. Chain guide is worn out
   - *Replace chain guide.*
7. Stretched timing chain or worn out sprocket
   - *Replace timing chain and sprocket.*
8. Camshaft is worn out
   - *Check if camshaft radial clearance is out of specification.*

OIL LEAKAGE FROM CYLINDER HEAD

1. Cylinder head cover gasket is leaking
   - *Replace cylinder head cover gasket and retighten screws with recommended torque.*
   - *Check cylinder head cover for cracks or other damage. Replace if necessary.*
2. Cylinder head cover screws are leaking
   - *Replace cylinder head cover screws.*
3. Spark plug tube gasket is leaking
   - *Remove cylinder head cover and replace spark plug tube gasket.*
   - *Clean spark plug area from oil spillage.*
4. Blow by valve is leaking
   - *Replace blow by valve O-ring.*
5. Camshaft sensor O-ring is leaking
   - *Replace camshaft sensor O-ring.*
6. Cylinder head gasket is leaking
   - *Remove cylinder head and check for damage.*
   - *Replace cylinder head gasket and retighten screws with recommended torquing procedure.*

ENGINE LACKS ACCELERATION OR POWER

1. Incorrect camshaft timing adjustment
   - *Replace damaged components and readjust camshaft timing.*
2. Intake or exhaust valves are leaking
   - *Perform ENGINE LEAK TEST.*
   - *Check if valve seats properly in valve seat.*
   - *Repair or replace damaged components.*
3. Broken valve spring(s)
   - *Replace defective parts.*
4. Broken rocker arm(s)
   - *Replace defective parts.*

PROCEDURES

CYLINDER HEAD COVER

Cylinder Head Cover Access

Open or remove seat.

On **models with suspension**, remove the rear ventilation cover.

Removing the Cylinder Head Cover

1. Unplug and remove ignition coils.

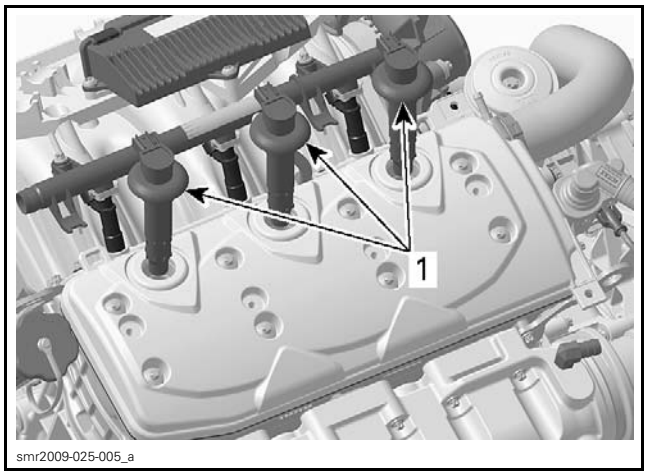

1. Ignition coils

2. Remove screws securing the cylinder head cover.

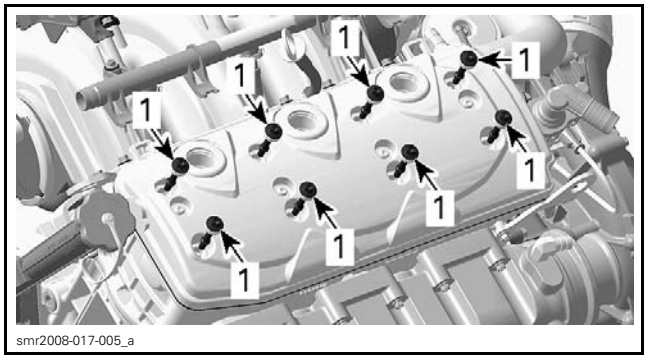

1. Cylinder head cover screws

3. Remove the cylinder head cover and its gasket.

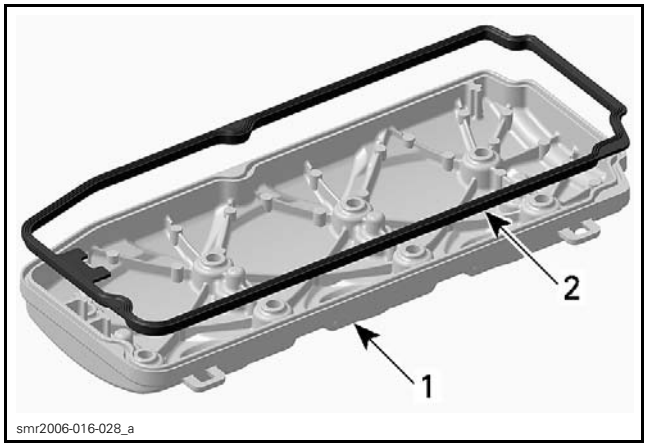

1. Cylinder head cover
2. Gasket

Inspecting the Cylinder Head Cover

Check if the gasket on the cylinder head cover and the rubber bushing on the cylinder head cover screws are brittle, cracked or hard. If so, replace the gasket or the cylinder head cover screw accordingly.

Installing the Cylinder Head Cover

For installation, reverse the removal procedure. However, pay attention to the following.

Properly seat the gasket in the cover groove.

Install the cylinder head cover screws according to following sequence.

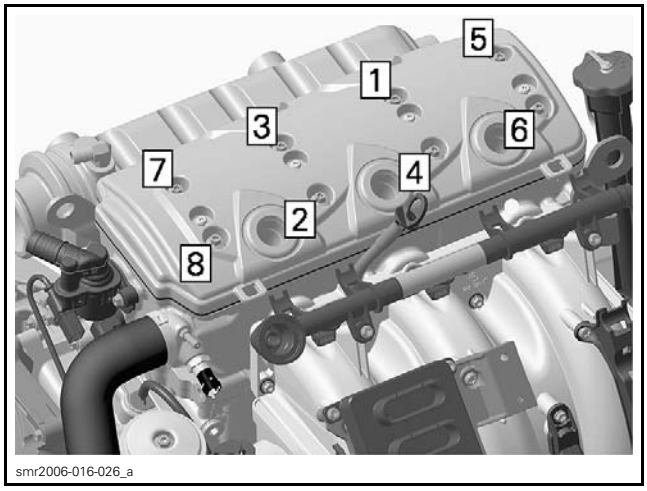

TYPICAL

TIGHTENING TORQUE	
Cylinder head cover screws	9 N•m (80 lbf•**in**)

Install all other removed parts. Refer to proper subsection for procedure.

SPARK PLUG TUBES

Removing the Spark Plug Tube

Remove the *CYLINDER HEAD COVER*, see procedure in this subsection.

Pull spark plug tubes to remove them.

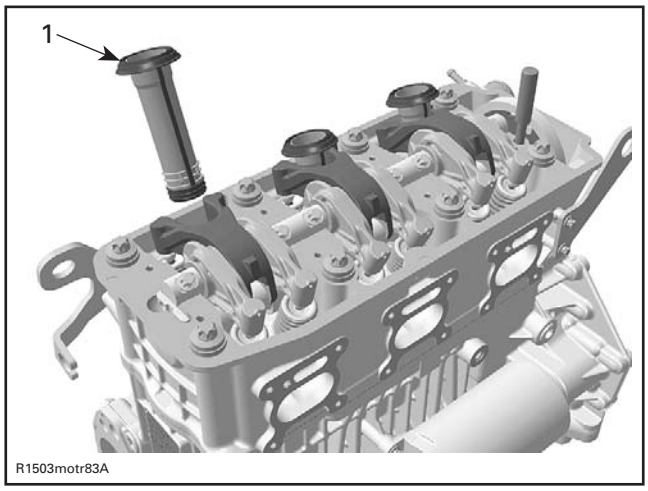

1. Spark plug tube

Inspecting the Spark Plug Tube

Check seals on spark plug tube. If seals are brittle, cracked or hard, replace spark plug tube.

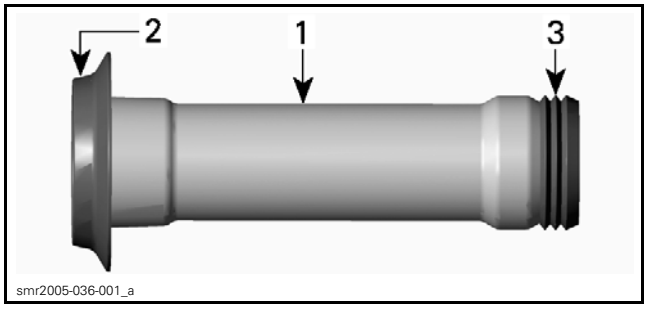

TYPICAL
1. Spark plug tube
2. Seal to the cylinder head cover
3. Seal to the cylinder head

Installing the Spark Plug Tube

For installation, reverse the removal procedure. Pay attention to the following detail.

Apply engine oil on seals.

ROCKER ARMS

Removing the Rocker Arm

1. Remove the *CYLINDER HEAD COVER*, see procedure in this subsection.
2. Remove spark plug tubes.
3. Remove and discard rocker arm shaft screws.

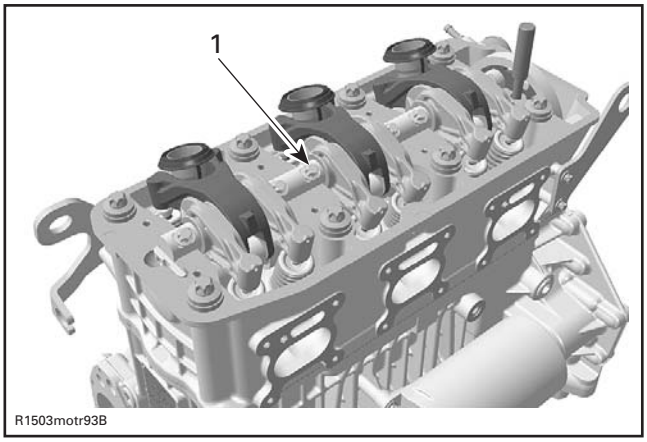

1. Rocker arm shaft screw

4. Remove rocker arm shaft with rocker arms.

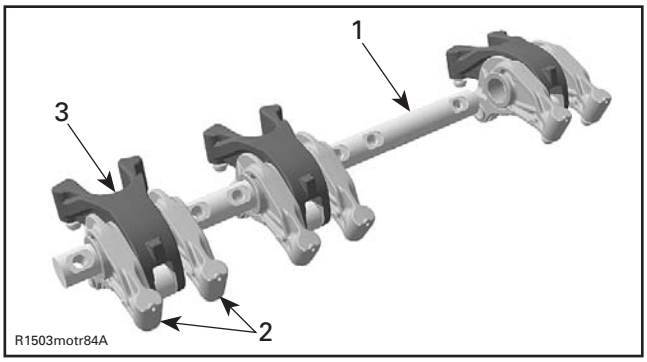

1. Rocker arm shaft
2. Rocker arms (exhaust side)
3. Rocker arm (intake side)

Inspecting the Rocker Arm

Inspect each rocker arm for cracks and scored friction surfaces. If so, replace rocker arm assembly.

Check the rocker arm rollers for free movement, wear and excessive radial play. Replace rocker arm assembly as necessary.

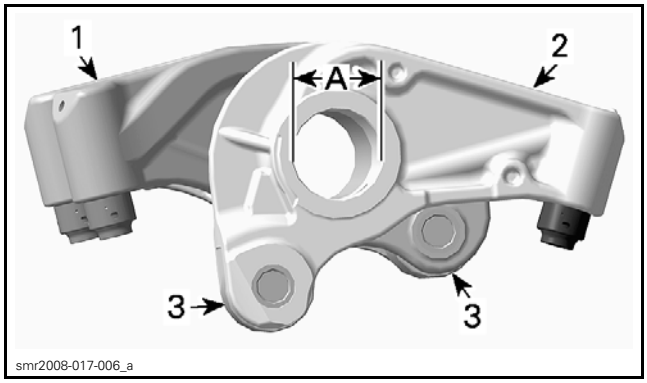

1. Rocker arm (intake side)
2. Rocker arm (exhaust side)
3. Rollers

A. Rocker arm inside diameter

Measure rocker arm inside diameter. If diameter is out of specification, change the rocker arm assembly.

ROCKER ARM INSIDE DIAMETER	
NEW	20.007 mm - 20.020 mm (.7877 in - .7882 in)
SERVICE LIMIT	20.050 mm (.7894 in)

Press the hydraulic lifter with your thumb. If the hydraulic lifter can be fully pressed in, replace rocker arm. Lifter must turn freely in rocker arm bore. Otherwise, replace.

Rocker Arm Shaft

Check for scored friction surfaces, if so, replace parts.

Measure rocker arm shaft diameter.

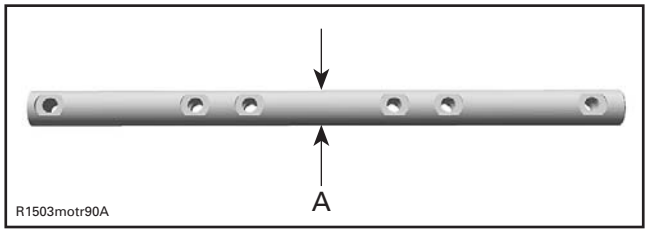

A. Measure rocker arm shaft diameter here

ROCKER ARM SHAFT DIAMETER	
NEW	19.980 mm - 19.993 mm (.7866 in - .7871 in)
SERVICE LIMIT	19.970 mm (.7862 in)

Any area worn excessively will require parts replacement.

Verify and clean oil orifices to ensure a good rocker arm shaft lubrication.

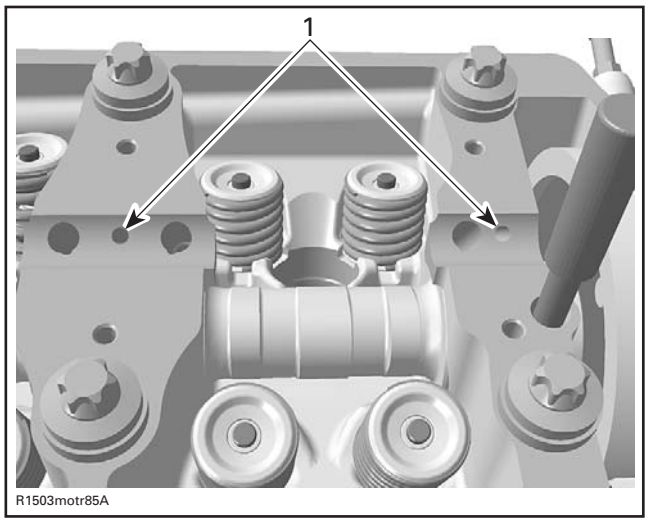

1. Oil orifices from the camshaft to the rocker arm shaft, then to the rocker arms and finally to the valve adjustment

Installing the Rocker Arm

For installation, reverse the removal procedure. Pay attention to the following details.

NOTE: The rocker arm shaft can only be installed in one specific position. Therefore the camshaft has to be positioned with its locking pin when the piston of cylinder 3 is on ignition TDC.

1. Lock camshaft. Refer to *CAMSHAFT* in this subsection.
2. Make sure the position lines on oil separator cover are lined up as shown in the following illustration.

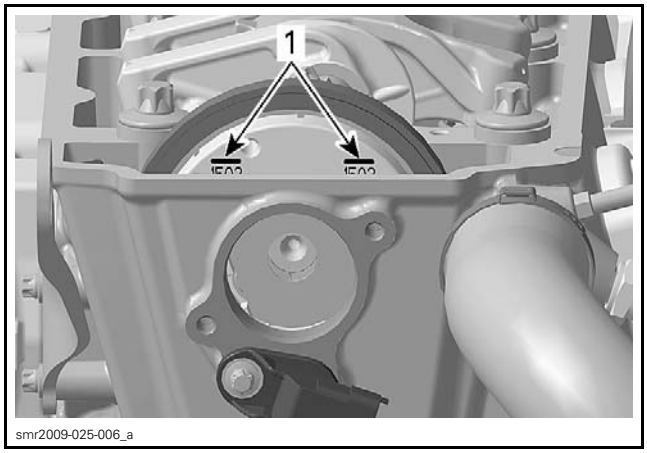

1. Position lines

3. Apply engine oil on rocker arm shaft.
4. Position the rocker arm shaft with the notches on top.

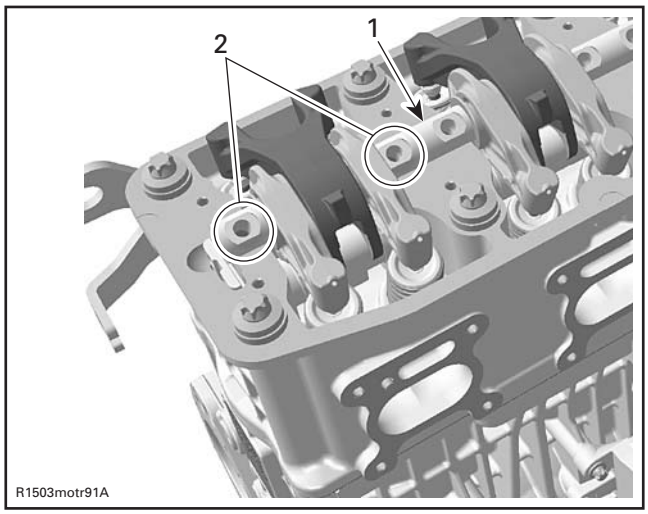

1. Rocker arm shaft
2. Rocker arm shaft notches

5. Install **NEW** rocker arm shaft screws.

NOTICE **This assembly uses stretch screws. As the screws have been stretched from the previous installation, it is very important to use new screws at assembly. Failure to replace screws and to strictly follow the torque procedure may cause screws to loosen and lead to engine damage.**

6. Torque screws according to following sequence.

NOTE: Always perform a step on **ALL** rocker arm shaft screws before going to the next step.

TIGHTENING TORQUE		
Rocker arm shaft screws	Step 1	10 N•m (89 lbf•**in**)
	Step 2	20 N•m (15 lbf•ft)
	Step 3	Apply an additional 90° rotation

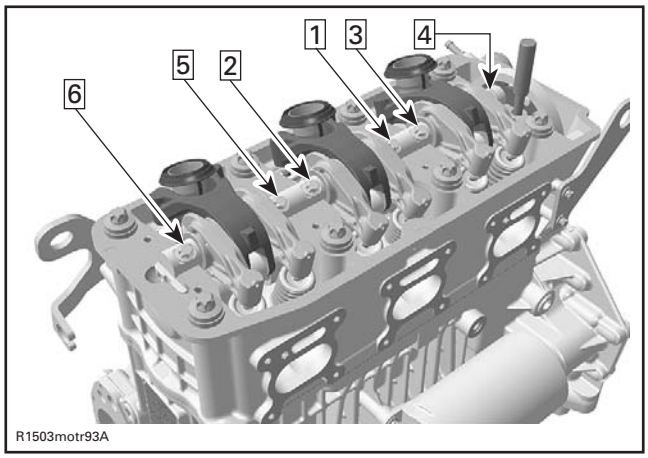

CAMSHAFT TIMING GEAR

NOTE: Although it is not necessary to position crankshaft to TDC for disassembly, it is a good practice to do it, as a troubleshooting step, to know before disassembly if valve timing was appropriate.

Removing the Camshaft Timing Gear

Lock crankshaft, refer to *CYLINDER BLOCK* subsection.

Remove *CYLINDER HEAD COVER*, see procedure in this subsection.

Remove camshaft position sensor. Refer to *ELECTRONIC FUEL INJECTION (EFI)* subsection.

Lock camshaft. Refer to *CAMSHAFT* in this subsection.

Remove thrust washer from oil separator cover.

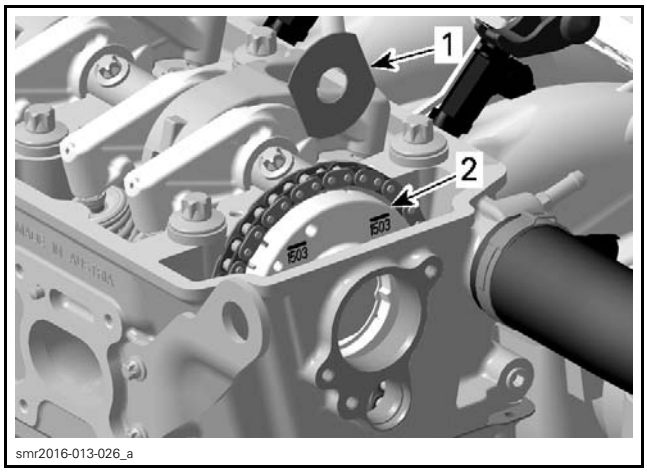

1. Thrust washer
2. Oil separator cover

Remove the chain tensioner. Refer to *CYLINDER BLOCK* subsection.

Remove:
- Chain guide
- Camshaft timing gear with oil separator cover.

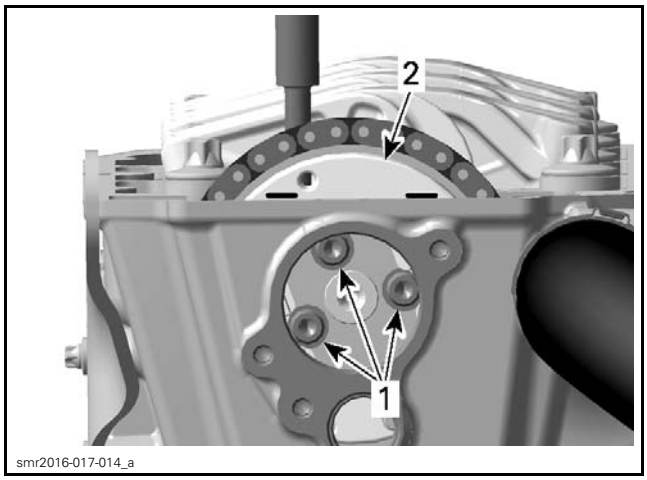

1. *Timing gear screws*
2. *Camshaft timing gear with oil separator cover*

NOTE: Secure timing chain with a retaining wire.

Inspecting the Camshaft Timing Gear

Check camshaft timing gear for wear or deterioration.

If gear is worn or damaged, replace it as a set (camshaft timing gear and timing chain).

NOTE: For crankshaft timing gear replacement, refer to *CYLINDER BLOCK* subsection.

Installing the Camshaft Timing Gear

For installation, reverse the removal procedure. Pay attention to the following details.

Install oil separator cover on camshaft timing gear.

NOTICE **Crankshaft and camshaft must be locked on TDC position.**

Place camshaft timing gear along with timing chain on the camshaft.

NOTE: The printed marks on the oil separator cover must be parallel to the cylinder head base.

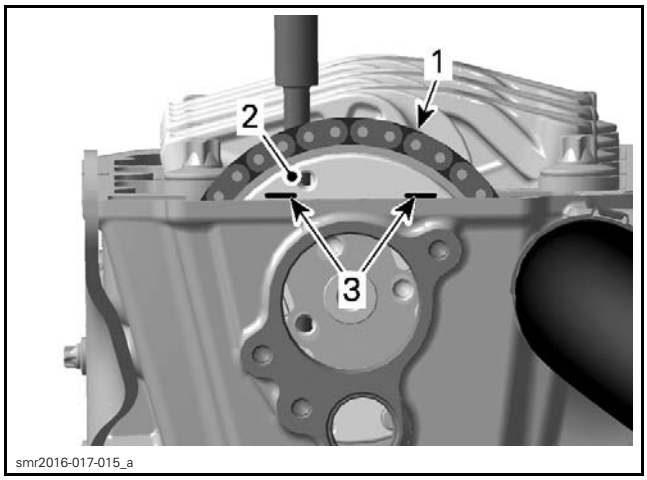

1. *Timing chain*
2. *Oil separator cover*
3. *Printed marks*

Ensure chain guides are properly installed.

Loosely install gear chain screws.

Install chain tensioner.

NOTE: There can be 2 different positions to install the timing gear on the camshaft. Basically both positions are working well, since the camshaft and crankshaft are locked in their proper position. Due to some tolerances, there could be one position which fits better than the other one. To check this, perform the following test.

Check if timing gear screws are still loose. If screws are squeezed by the timing gear, remove the chain tensioner again and rotate timing gear by one tooth clockwise. Then install the chain tensioner again.

One at a time, remove timing gear screws and apply LOCTITE 243 (BLUE) (P/N 293 800 060) on threads.

Tighten timing gear screws to specification.

TIGHTENING TORQUE	
Camshaft timing gear screws	16 N•m (142 lbf•**in**)

NOTICE **Crankshaft and camshaft must be locked on TDC position to place camshaft timing gear and timing chain in the proper position. To double check, take a look at the timing gear lines. They must be parallel to the cylinder head surface.**

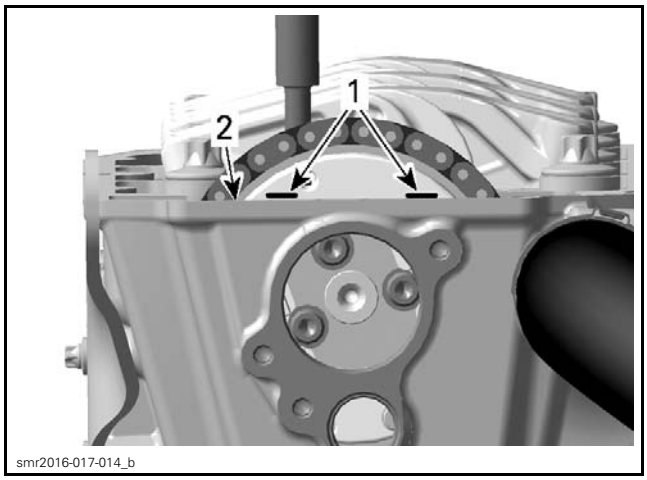

1. *Printed marks*
2. *Cylinder head surface*

NOTICE **Ensure to remove locking tools when finished.**

Install all other removed parts.

CAMSHAFT

Camshaft Locking Procedure

1. Remove *CYLINDER HEAD COVER*, see procedure in this subsection.
2. Lock crankshaft, refer to procedure in *CYLINDER BLOCK* subsection.

NOTE: Make sure that printed marks on oil separator cover are parallel to the cylinder head base.

3. Insert the camshaft locking tool into the hole behind the camshaft timing gear to lock camshaft.

REQUIRED TOOL	
CAMSHAFT LOCKING TOOL (P/N 529 035 839)	

3.1 Insert the camshaft locking tool into the hole behind the camshaft timing gear.

3.2 Make sure the position lines on oil separator cover are lined up as shown in the following illustration.

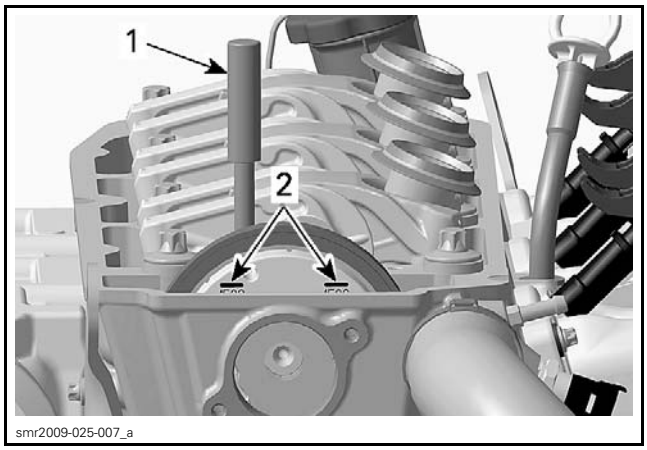

1. *Camshaft locking tool*
2. *Position lines*

Removing the Camshaft

Remove the *CAMSHAFT TIMING GEAR*, see procedure in this subsection.

Remove the *ROCKER ARM*, see procedure in this subsection.

Remove the camshaft lock to remove the camshaft.

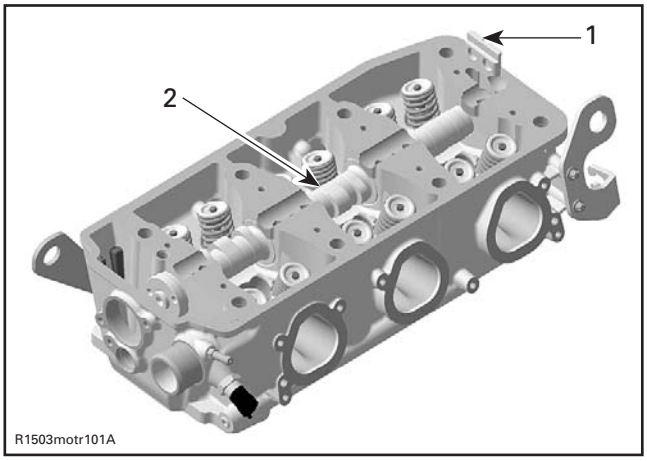

1. *Camshaft lock*
2. *Camshaft*

Inspecting the Camshaft

Check each lobe and bearing journal of camshaft for:

– Scoring
– Scuffing
– Cracks
– Other signs of wear.

Measure camshaft bearing journal and lobe height using a micrometer.

Measure clearance between both ends of camshaft and cylinder head.

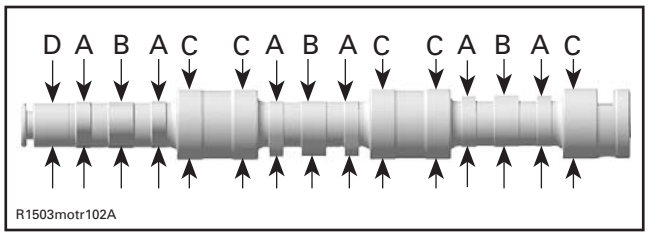

A. Camshaft lobe (exhaust valves)
B. Camshaft lobe (intake valves)
C. Camshaft bearing journal
D. Camshaft bearing journal — engine front

CAMSHAFT LOBE HEIGHT — EXHAUST VALVE	
NEW	31.430 mm to 31.630 mm (1.2374 in to 1.2453 in)
SERVICE LIMIT	31.380 mm (1.2354 in)
CAMSHAFT LOBE HEIGHT — INTAKE VALVE	
NEW	31.540 mm - 31.740 mm (1.2417 in - 1.2496 in)
SERVICE LIMIT	31.50 mm (1.2402 in)
CAMSHAFT BEARING JOURNAL	
NEW	39.892 mm - 39.905 mm (1.5706 in - 1.5711 in)
SERVICE LIMIT	39.880 mm (1.5701 in)
CAMSHAFT BEARING JOURNAL (ENGINE FRONT)	
NEW	24.939 mm - 24.960 mm (.9819 in - .9827 in)
SERVICE LIMIT	24.910 mm (.9807 in)
CAMSHAFT BEARING INNER DIAMETER	
NEW	40.000 mm - 40.020 mm (1.5748 in - 1.5756 in)
SERVICE LIMIT	40.050 mm (1.5768 in)
CAMSHAFT BEARING INNER DIAMETER (ENGINE FRONT)	
NEW	25.000 mm - 25.013 mm (.9843 in - .9848 in)
SERVICE LIMIT	25.050 mm (.9862 in)

Replace parts that are not within specifications.

Installing the Camshaft

For installation, reverse the removal procedure. Pay attention to the following details.

Grease the camshaft bearing journals well by using the ISOFLEX GREASE TOPAS NB 52 (P/N 293 550 021) or a similar product.

Install camshaft then place the camshaft lock in its slot.

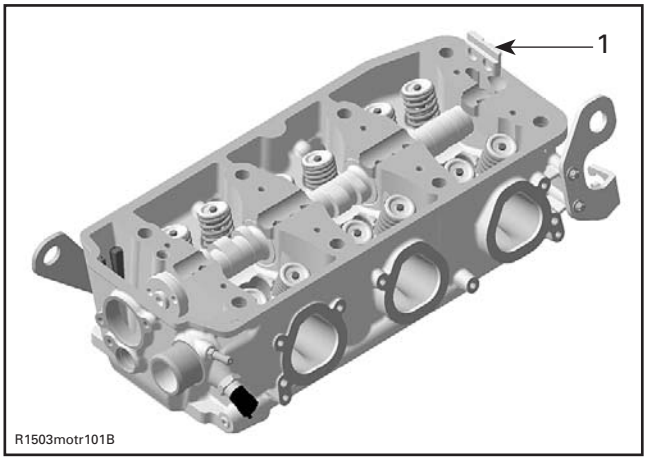

1. Camshaft lock

For other parts, refer to the proper installation procedures in this subsection.

CYLINDER HEAD

Removing the Cylinder Head

Lock crankshaft, refer to *CYLINDER BLOCK* subsection.

Drain coolant, refer to *COOLING SYSTEM* subsection.

Remove blow-by valve from cylinder head. Refer to *LUBRICATION SYSTEM* subsection.

Unplug the camshaft position sensors (CAPS).

Unplug the coolant temperature sensor (CTS).

Disconnect bleeding hose.

Disconnect the cylinder head outlet hose.

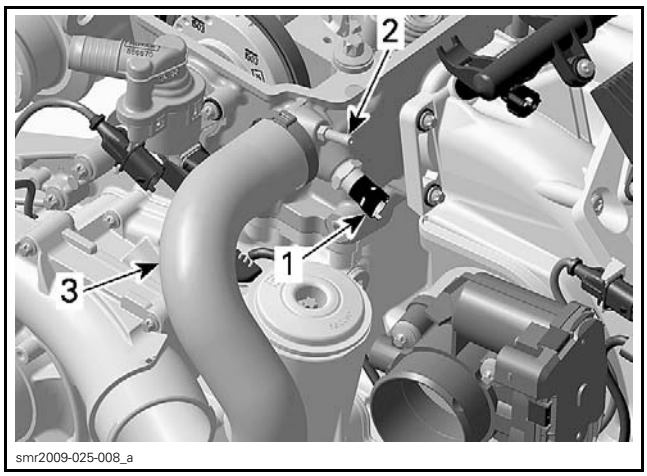

1. Coolant temperature sensor (CTS)
2. Bleeding nipple
3. Cylinder head outlet hose

Remove the intake manifold. Refer to *INTAKE MANIFOLD* subsection.

Remove the exhaust manifold. Refer to *EXHAUST SYSTEM* subsection.

Unscrew the oil filler tube support from cylinder head.

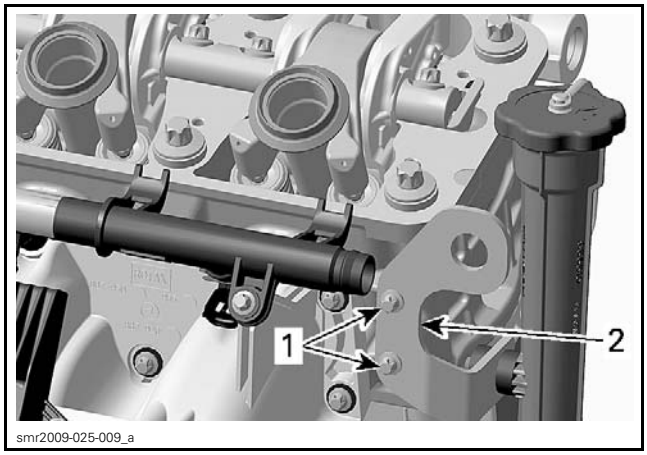

1. *Retaining screws*
2. *Oil filler tube support*

Remove the *CAMSHAFT TIMING GEAR*, see procedure in this subsection.

Remove the M6 cylinder head screws.

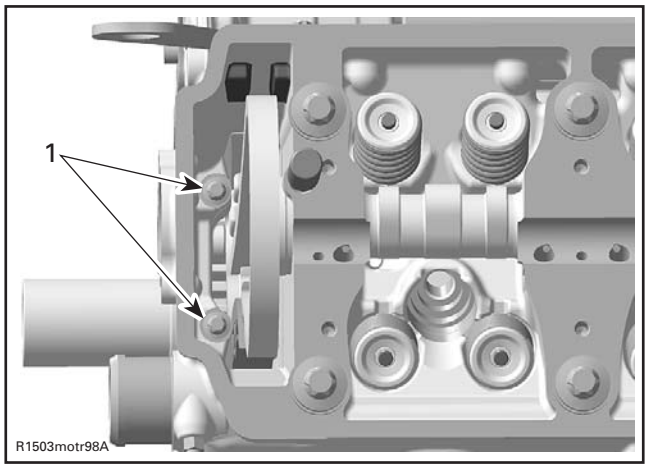

1. *M6 cylinder head screws*

Remove and discard the M11 cylinder head screws securing cylinder head to cylinder block.

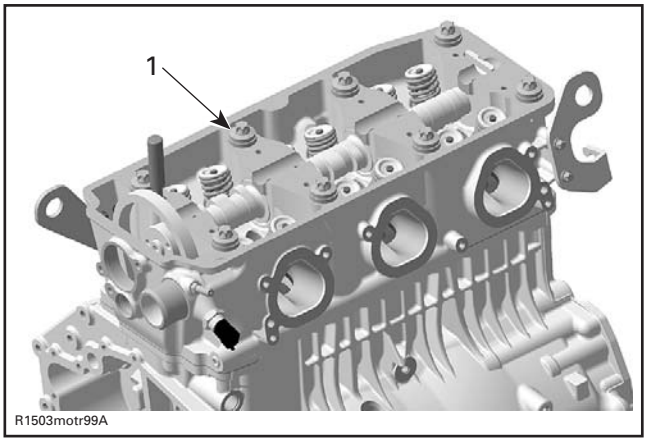

1. *M11 cylinder head screws*

Pull up cylinder head.

Remove and discard gasket.

Cleaning the Cylinder Head

Remove carbon deposits from combustion chamber, exhaust port and piston top.

Clean cylinder head, especially cylinder head screw surface from oil spillage.

Blow out the oil orifices and check if they are not clogged.

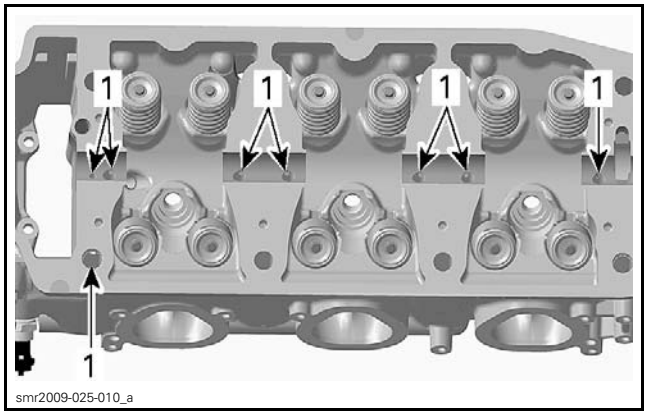

1. *Oil orifices*

Inspecting the Cylinder Head

Check for cracks between valve seats or other damages, if so, replace cylinder head.

Check cylinder head mating surface for flatness, using a straight edge.

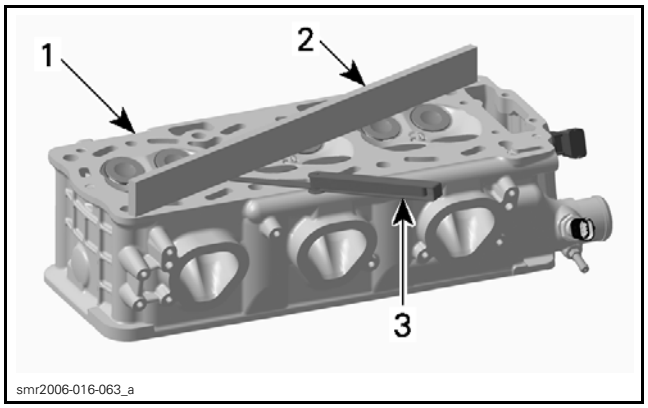

1. *Cylinder head*
2. *Flat bar*
3. *Feeler gauge*

Check cylinder head warpage.

CYLINDER HEAD WARPAGE	
Maximum	0.15 mm (.006 in)

If warpage exceeds specification, resurface the cylinder head as follows.

Use a 400 - 600 grit wet sandpaper on a surface plate and gently grind off the mating surface.

NOTE: To ensure an even surface, rotate cylinder head several times during resurfacing.

Replace cylinder head, if resurfacing fails.

Installing the Cylinder Head

For installation, reverse the removal procedure. Pay attention to the following details.

Ensure dowel pins are in place.

Install NEW cylinder head gasket.

NOTICE **Each installation of the cylinder head requires a new cylinder head gasket. Using a gasket twice will cause engine damage, even if the engine had not run.**

Apply LOCTITE 243 (BLUE) (P/N 293 800 060) on threads of M6 cylinder head screws.

Install M6 screws and manually tighten them.

Install NEW M11 cylinder head screws and tighten them manually.

NOTICE **This assembly uses stretch screws. As the M11 screws have been stretched from the previous installation, it is very important to replace the old screws by new ones at assembly. Failure to replace screws and to strictly follow the torque procedure may cause screws to loosen and lead to engine damage.**

Using the following sequence, tighten screws as described below.

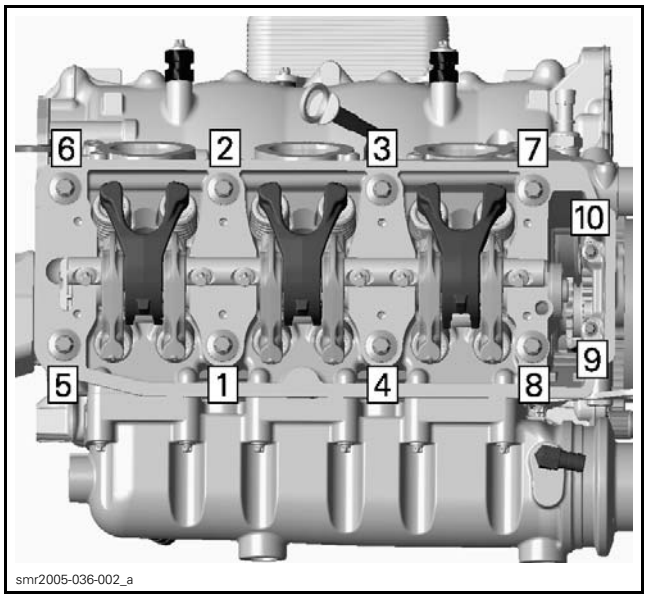

NOTE: Always perform a step on ALL M11 cylinder head screws before going to the next step.

TIGHTENING TORQUE		
M11 cylinder head screws	Step 1	40 N•m (30 lbf•ft)
	Step 2	Apply an additional 120° rotation
	Step 3	Apply an additional 90° rotation

Tighten M6 cylinder head screws to specification.

TIGHTENING TORQUE	
M6 cylinder head screws	9 N•m (80 lbf•**in**)

Remove crankshaft and camshaft locking tools.

Install all removed parts.

VALVE SPRINGS

Removing the Valve Spring

Remove rocker arm shaft. Refer to *ROCKER ARM* procedure in this subsection.

Remove *CYLINDER HEAD*, see procedure in this subsection.

Compress valve springs.

REQUIRED TOOL	
VALVE SPRING COMPRESSOR (P/N 529 035 724)	
VALVE SPRING COMPRESSOR CUP (P/N 529 036 073)	

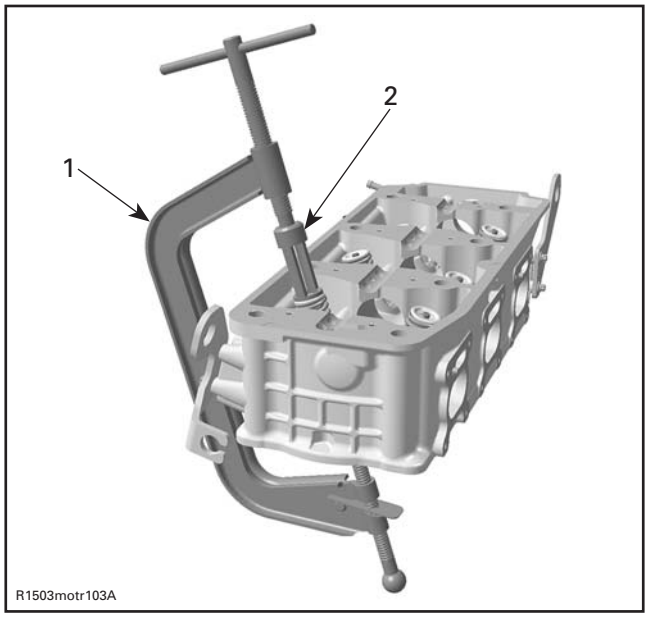

1. *Valve spring compressor clamp*
2. *Valve spring compressor cup*

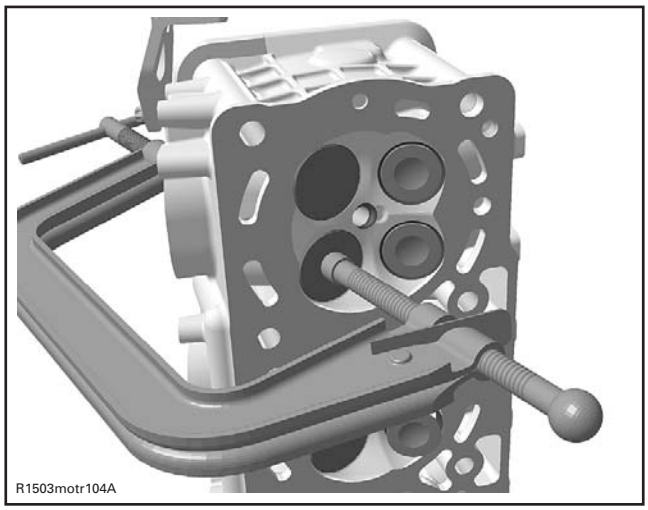

LOCATE VALVE SPRING COMPRESSOR CLAMP IN CENTER OF THE VALVE

Remove valve cotters.

Withdraw valve spring compressor, valve spring retainer and valve springs.

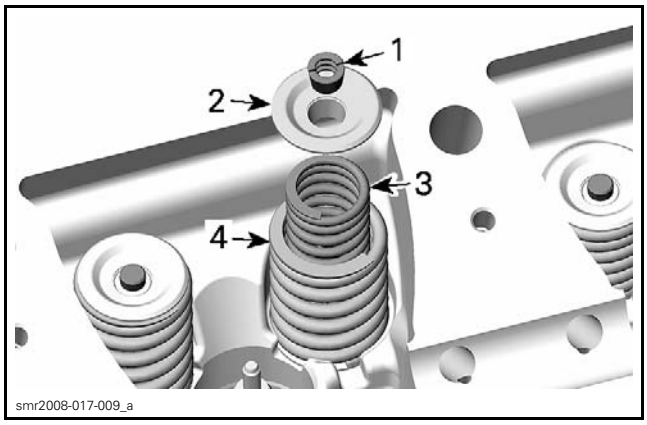

1. *Valve cotters*
2. *Valve spring retainer*
3. *Inner valve spring*
4. *Outer valve spring*

Inspecting the Valve Spring

Check valve springs for rust, corrosion or other visible damages. If so, replace faulty valve springs.

Check valve springs for free length and straightness.

Replace valve springs if not within specifications.

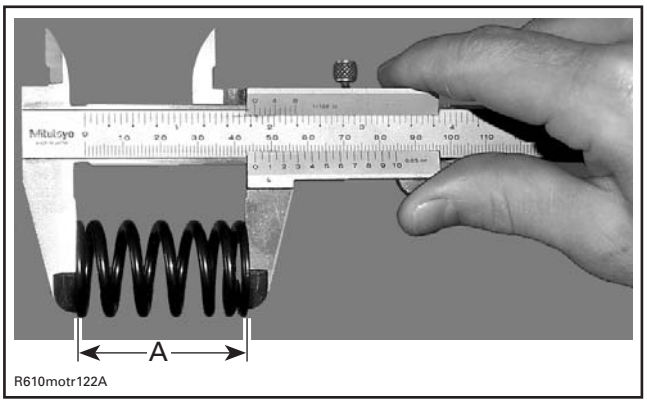

A. *Valve spring length*

OUTER VALVE SPRING FREE LENGTH	
NEW NOMINAL	45.45 mm (1.789 in)
SERVICE LIMIT	43.00 mm (1.693 in)
INNER VALVE SPRING FREE LENGTH	
NEW NOMINAL	41.02 mm (1.615 in)
SERVICE LIMIT	38.8 mm (1.528 in)

Installing the Valve Spring

For installation, reverse the removal procedure. Pay attention to the following details.

Colored area of the valve spring must be placed on top.

NOTE: Valve cotters must be properly engaged in valve stem grooves.

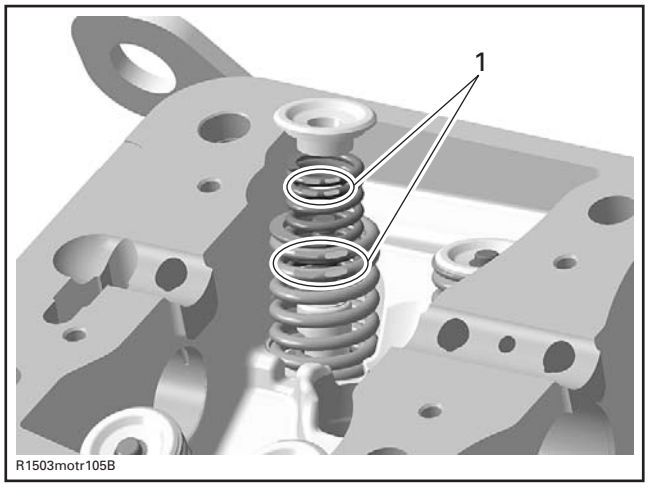

1. Position of the valve spring

VALVES

Removing the Valve

Remove valve spring.

Push valve stem then pull valves out of valve guides.

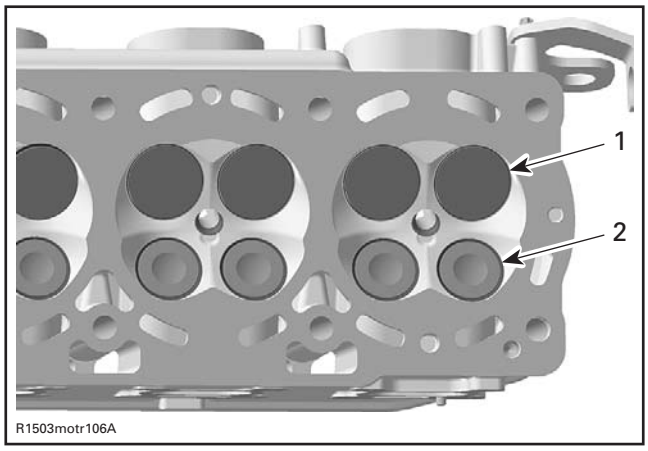

1. Intake valve 38 mm
2. Exhaust valve 31 mm

Remove and discard valve stem seal.

RECOMMENDED TOOL
SNAP-ON VALVE STEM SEAL PLIERS (P/N YA8230)

Inspecting the Valve

Valve Stem Seal

Always install NEW seals whenever valves are removed.

Inspection of valve stem seals is not needed because NEW seals should always be installed whenever cylinder head is removed.

Valve

Inspect valve surface, check for abnormal stem wear and bending. If so, replace by a new one.

Valve Stem and Valve Guide Clearance

Measure valve stem and valve guide in three places, using a micrometer and a small bore gauge.

NOTE: Clean valve guide to remove carbon deposits before measuring.

Change valve if valve stem is out of specification or has other damages such as wear or friction surface.

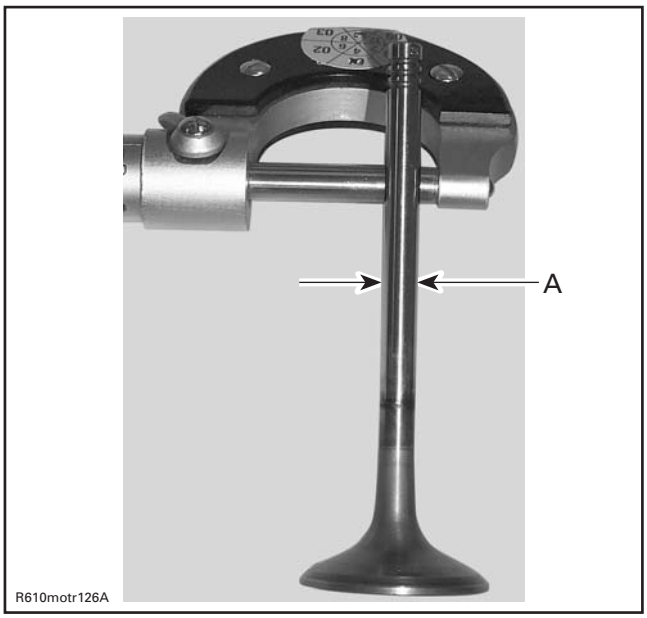

A. Valve stem diameter

VALVE STEM DIAMETER	
NEW	
EXHAUST	5.946 mm - 5.960 mm (.2341 in - .2346 in)
INTAKE	5.961 mm - 5.975 mm (.2347 in - .2352 in)
SERVICE LIMIT	
EXHAUST	5.93 mm (.233 in)
INTAKE	

Replace valve guide if it is out of specification or has other damages such as wear or friction surface. Refer to *VALVE GUIDE* in this subsection.

VALVE GUIDE INNER DIAMETER	
NEW	
EXHAUST	5.994 mm - 6.018 mm (.236 in - .2369 in)
INTAKE	
SERVICE LIMIT	
EXHAUST	6.060 mm (.2386 in)
INTAKE	

Valve Face and Seat

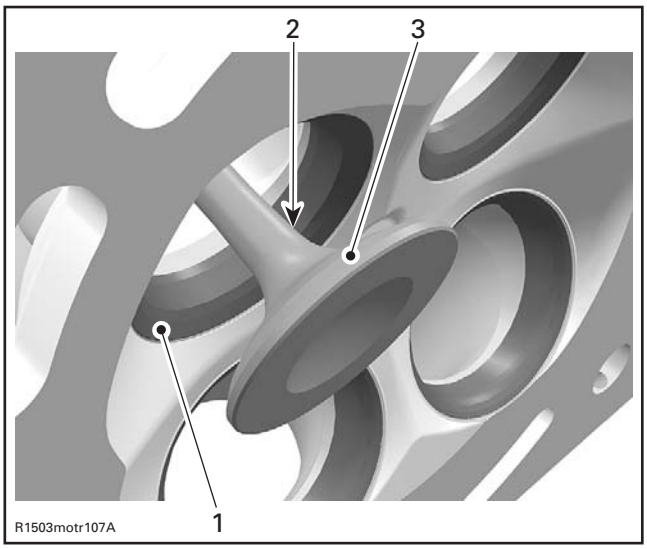

1. Valve seat
2. Exhaust valve contaminated area
3. Valve face (contact surface to valve seat)

Check valve face and seat for burning or pittings and replace valve or cylinder head if there are signs of damage.

Ensure to seat valves properly. Apply some lapping compound on valve face and work valve on its seat with a lapping tool.

Measure valve face contact width.

NOTE: The location of contact area should be in center of valve seat.

Measure valve seat width, using a caliper.

VALVE SEAT CONTACT WIDTH	
NEW	
EXHAUST	1.25 mm - 1.55 mm (.049 in - .061 in)
INTAKE	1.10 mm - 1.30 mm (.043 in - .051 in)
SERVICE LIMIT	
EXHAUST	1.8 mm (.071 in)
INTAKE	1.6 mm (.063 in)

If valve seat contact width is too wide or has dark spots, replace the cylinder head.

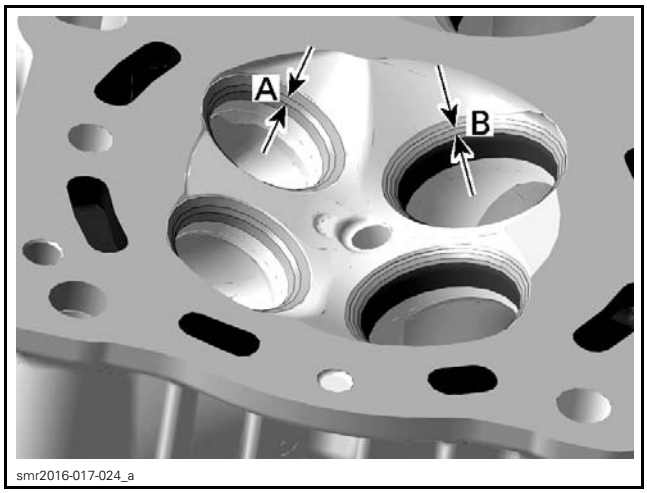

A. Valve seat contact width - Exhaust valve
B. Valve seat contact width - Intake valve

Valve Seat Grinding

NOTE: The valve seats may be reground with a valve seat grinder which centers on the valve guide.

1. Grind the valve seat at 45°. Remove no more material than absolutely necessary to clean the seat up.
2. Using a 35° stone, narrow the valve seat until the appropriate outer diameter is obtained.

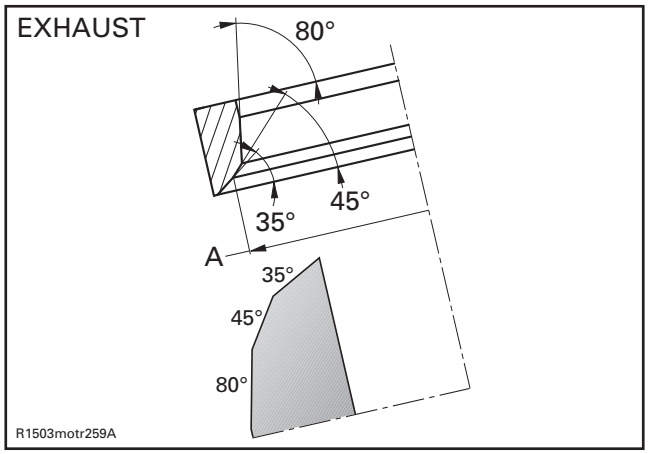

A. Valve seat outer diameter EXHAUST

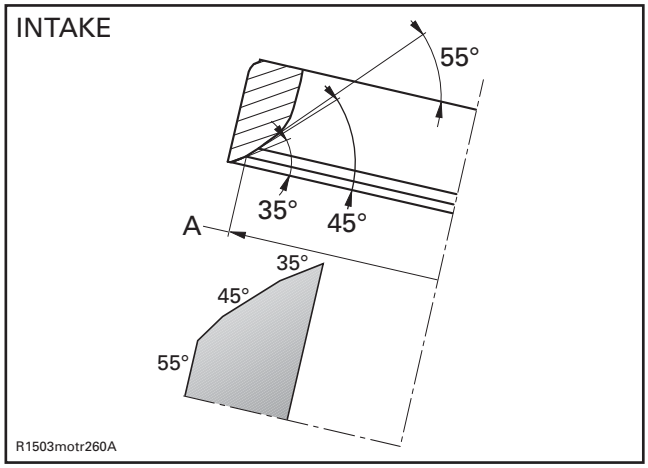

A. Valve seat outer diameter INTAKE

VALVE SEAT OUTER DIAMETER	
INTAKE	37.35 mm (1.4705 in)
EXHAUST	30.3 mm (1.1929 in)

3. Using a 55° stone for the intake and an 80° stone for the exhaust valve, reduce the valve seat contact width to the appropriate value mentioned above.
4. Finally, coat the valve seating surface with a fine paste of valve grinding compound using a manual valve grinding mandrel. Lightly grind the valves until a smooth, even, uniform sealing surface of the appropriate inside and outside diameter is obtained on both the valve and the seat. Use only a hand held valve grinding mandrel with a suction cup, rotating the valve back and forth through about 45°, and then advancing the valve 45° before repeating this operation.

Installing the Valve

For installation, reverse the removal procedure. Pay attention to the following details.

Install NEW valve stem seal.

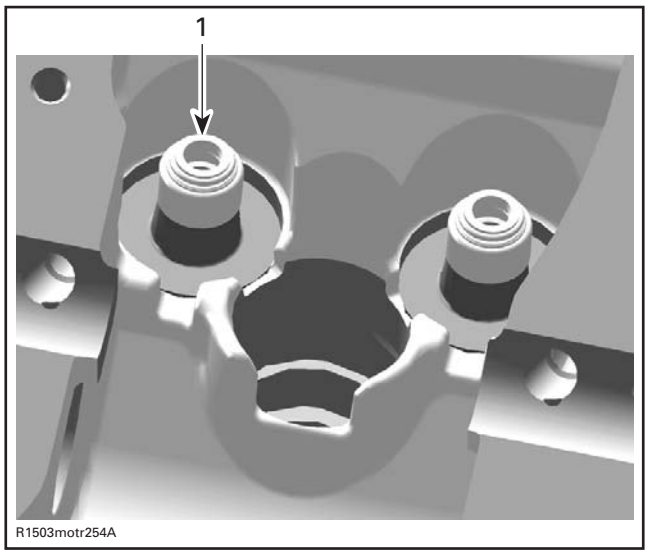

1. Valve stem seal

Apply engine oil on valve stem and install valve.

NOTICE **Be careful when valve stem is passed through sealing lips of valve stem seal.**

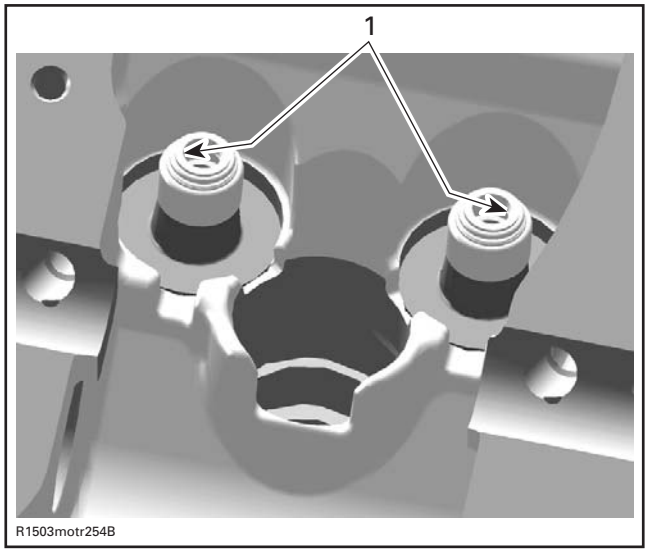

1. Sealing lips of valve stem seal

To ease installation of cotters, apply oil or grease on them so that they remain in place while releasing the spring.

After springs are installed, ensure valve springs and valve spring retainer are properly locked by tapping on valve stem end with a soft hammer so that valve opens and closes a few times.

NOTICE **An improperly locked valve spring will cause engine damage.**

VALVE GUIDE

Replacing the Valve Guide

NOTICE **Do not heat cylinder head for this procedure.**

NOTICE **The sharp edge near the top of the valve guide must be machined away. Otherwise it will foul the valve guide hole in the cylinder head and destroy the cylinder head, as the valve guide is removed.**

Use a special reamer as far as the top of the notch.

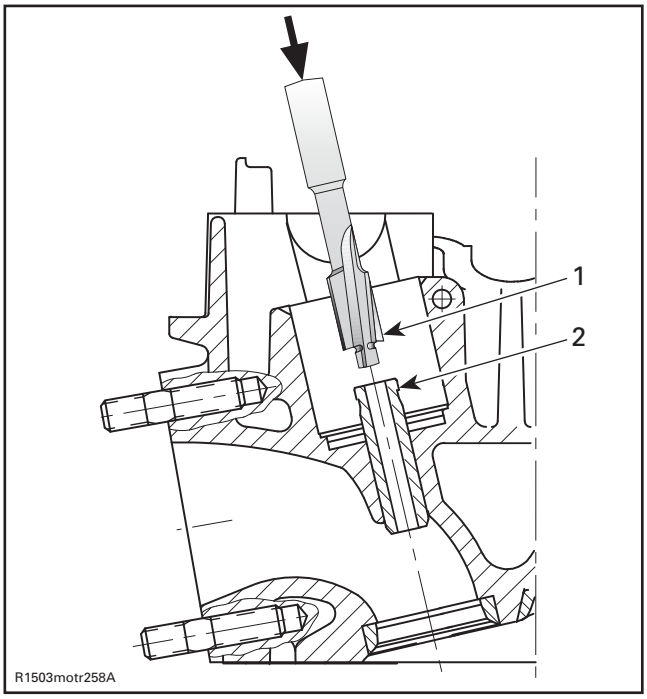

TYPICAL
1. Special reamer
2. Notch

Chase valve guide out of the cylinder head towards combustion chamber.

REQUIRED TOOL	
VALVE GUIDE REMOVER (6 MM) (P/N 529 036 086)	

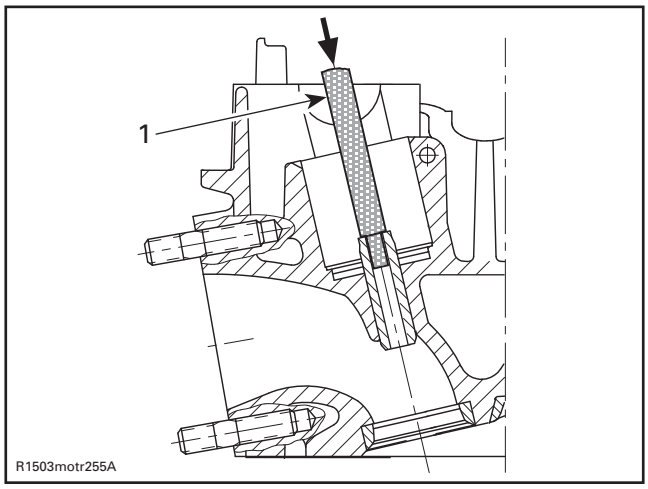

TYPICAL
1. Punch

Check valve guide bore for abreased material. The inlet and exhaust valve guides have the same length and are interchangeable.

NOTE: If valve guide has caused scoring during extraction, replace the cylinder head.

Grease the bore in cylinder head and the leading end of valve guide with MOLYKOTE G-N (P/N 420 297 433).

Press the valve guide into the COLD cylinder head as shown.

REQUIRED TOOL	
VALVE GUIDE PUSHER (6 MM) (P/N 529 036 087)	

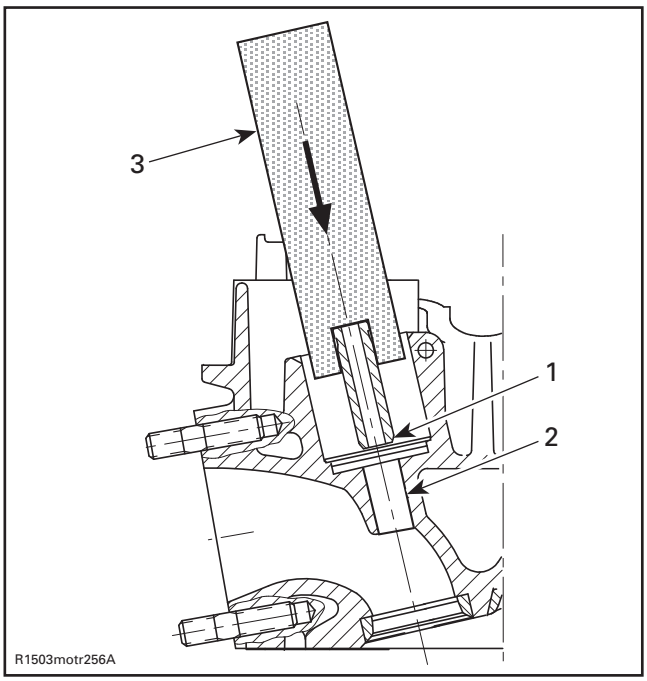

TYPICAL
1. Valve guide leading end
2. Cylinder head bore
3. Jig

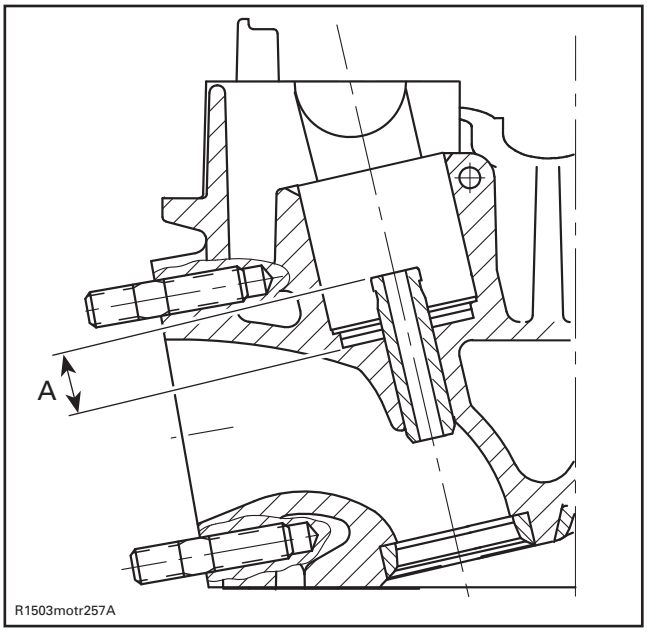

TYPICAL
A. Protrusion

VALVE GUIDE PROTRUSION	
MINIMUM	12.4 mm (.4882 in)
MAXIMUM	12.8 mm (.5039 in)

NOTE: After installing new guides, they must be reamed with a standard 6 mm reamer tool. These are available from various tool suppliers.

Clean cylinder head carefully. Check that the valve seat is concentric with the new guide axis (check contact surface with engineer's blue).

CYLINDER BLOCK

SERVICE TOOLS

Description	Part Number	Page
CRANKSHAFT LOCKING TOOL	529 035 821	13, 15, 21
PISTON CIRCLIP INSTALLER	529 035 765	9

SERVICE TOOLS – OTHER SUPPLIER

Description	Part Number	Page
SNAP-ON PISTON RING COMPRESSOR PLIERS	RC980	9

SERVICE PRODUCTS

Description	Part Number	Page
LOCTITE 243 (BLUE)	293 800 060	20
LOCTITE 5910	293 800 081	20
LOCTITE CHISEL (GASKET REMOVER)	413 708 500	20

Midwest Manuals
Green Manuals
Paperless Manuals
For a Better Tomorrow
If you bought this manual from any other seller please leave them NEGATIVE feedback and notify me at bestshopmanuals@gmail.com

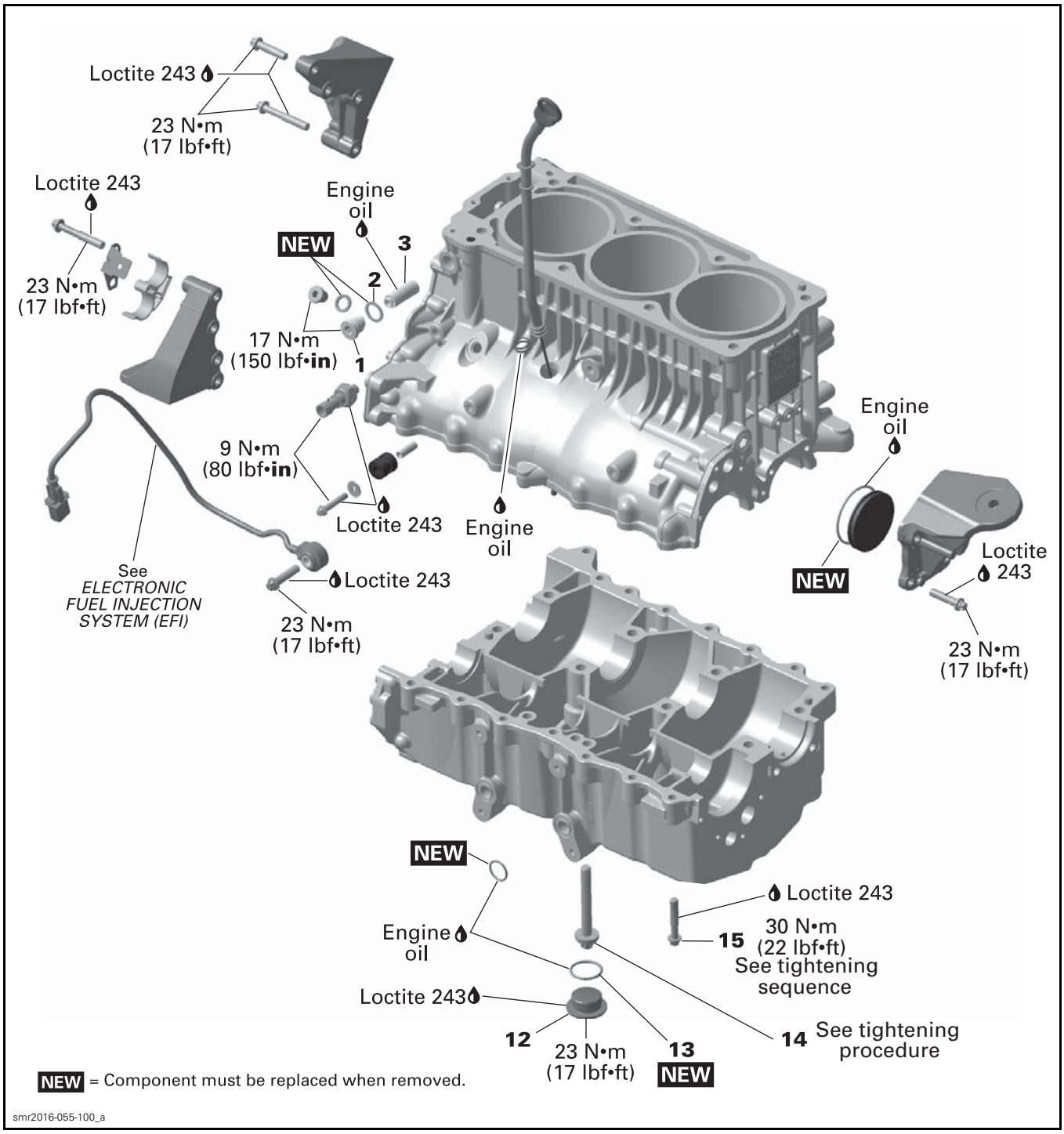
Loctite 243
23 N•m
(17 lbf•ft)
Loctite 243
23 N•m
(17 lbf•ft)
Engine
oil
NEW
3
2
17 N•m
(150 lbf•in)
1
9 N•m
(80 lbf•in)
Loctite 243
Engine
oil
See
ELECTRONIC
FUEL INJECTION
SYSTEM (EFI)
Loctite 243
23 N•m
(17 lbf•ft)
Engine
oil
NEW
Loctite
243
23 N•m
(17 lbf•ft)
NEW
Loctite 243
Engine
oil
15
30 N•m
(22 lbf•ft)
See tightening
sequence
Loctite 243
12
23 N•m
(17 lbf•ft)
13
NEW
14
See tightening
procedure
NEW = Component must be replaced when removed.
smr2016-055-100_a

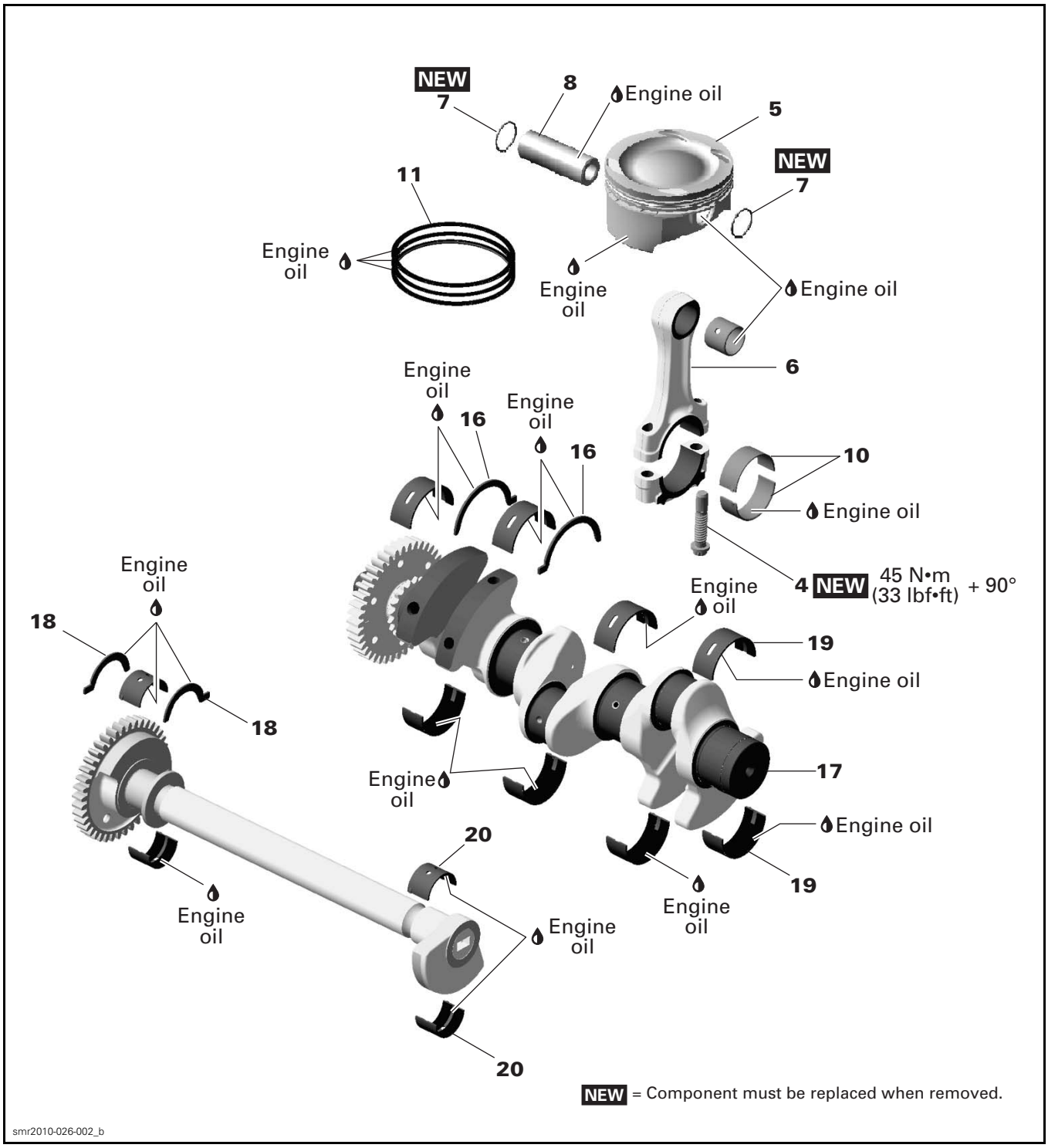

smr2010-026-002_b

GENERAL

When disassembling parts that are duplicated in the engine, (e.g.: pistons, connecting rods etc.), it is strongly recommended to note their position and to keep them as a "group". If you find a defective component, it will be much easier to find the cause of the failure. Since parts were break-in together during the engine operation, they will keep their matched fit when parts are reassemble together within their "group".

TROUBLESHOOTING

The following is provided to help in diagnosing the probable source of troubles. It is a guideline and it should not be assumed to list all possible problems.

Always check for fault codes. If a fault code is detected, service the fault code first. Refer to *DIAGNOSTIC AND FAULT CODES* subsection.

UNUSUAL ENGINE NOISE OR VIBRATIONS

1. Heavy wear on plain bearings
   - *Check radial play of plain bearings.*
   - *Replace plain bearings if out of specification.*
2. Crankshaft and balancer shaft are not properly aligned
   - *Disassemble cylinder block and check if marks are properly aligned.*
3. Crankshaft or balancer shaft axial play out of specification
   - *Measure crankshaft and balancer shaft axial play.*
   - *If axial play is out of specification, replace thrust washers.*
4. Connecting rod axial play out of specification
   - *Measure connecting rod axial play on crankshaft.*
   - *Replace connecting rod or crankshaft if out of specification.*
5. Connecting rod screws got loose
   - *Replace damaged components and retighten screws with the recommended torque.*

BLUE SMOKE IN THE EXHAUST

1. Oil scrapper rings worn out
   - *Replace piston rings.*

ENGINE SUDDENLY TURNS OFF (POOR IDLING)

1. Piston rings worn out
   - *Replace piston rings.*
2. Piston/cylinder wall clearance out of specification
   - *Check piston/cylinder wall clearance.*
   - *Replace if out of specification.*
3. Melted or broken piston
   - *Check if oil spray nozzle is not clogged. Refer to LUBRICATION SYSTEM subsection.*
   - *Replace piston and cylinder block if necessary.*

PROCEDURES

TIMING CHAIN

Inspecting the Timing Chain

Check timing chain on camshaft gear for excessive radial play.

Check chain condition for wear and rollers condition.

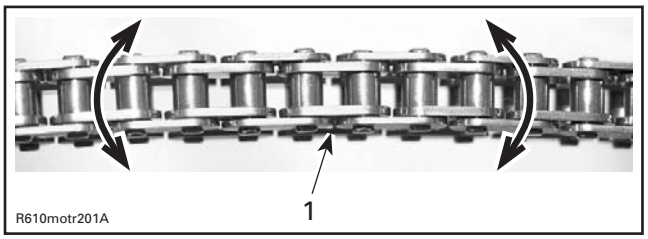

1. Timing chain

If chain is excessively worn or damaged, replace it as a set (camshaft timing gear and timing chain).

Removing the Timing Chain

Remove:

– Engine oil (refer *LUBRICATION SYSTEM* subsection)
– Engine from vehicle (refer to *ENGINE REMOVAL AND INSTALLATION* subsection)
– Cylinder head (refer to *CYLINDER HEAD* subsection)
– PTO housing (refer to *PTO HOUSING AND MAGNETO* subsection)
– Crankshaft (refer to *CRANKSHAFT* in this subsection)
– Timing chain.

Inspecting the Timing Chain

The installation is essentially the reverse of the removal procedure. However, pay attention to the following details.

Ensure to perform proper valve timing.

NOTICE **Improper valve timing will damage engine components.**

Lock crankshaft and camshaft at TDC (refer to *CYLINDER HEAD* subsection for the camshaft locking procedure).

Install chain, then install chain tensioner.

CHAIN TENSIONER

Removing the Chain Tensioner

NOTE: Removal of the intake manifold allows easier access to the chain tensioner, but is not necessary. Refer to *INTAKE MANIFOLD* subsection.

Remove:
- Chain tensioner plug screw **no. 1**
- Gasket ring **no. 2** (discard it)
- Chain tensioner **no. 3**.

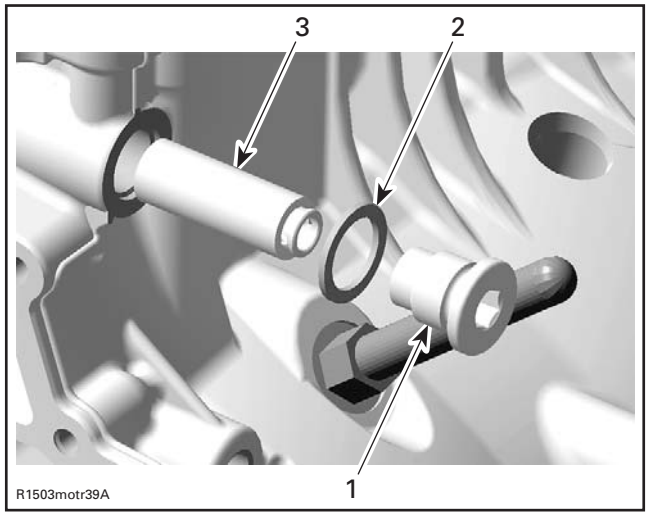

1. *Plug screw*
2. *Gasket ring*
3. *Chain tensioner*

Inspecting the Chain Tensioner

Check chain tensioner for excessive wear or cracks. Also check free movement of the chain tensioner piston.

Installing the Chain Tensioner

The installation is essentially the reverse of the removal procedure but, pay attention to the following details.

Use a NEW gasket ring when installing the chain tensioner plug screw.

Tighten the chain tensioner plug screw to specification.

TIGHTENING TORQUE	
Chain tensioner plug screw	17 N•m (150 lbf•**in**)

PISTONS AND CONNECTING RODS

Removing the Piston and the Connecting Rod

1. Disassemble *CYLINDER BLOCK* as per procedure in this subsection.

NOTE: It is recommended to measure connecting rod big end axial play prior to remove connecting rod. Refer to *INSPECTION* below.

2. Remove connecting rod cap screws **no. 4**.

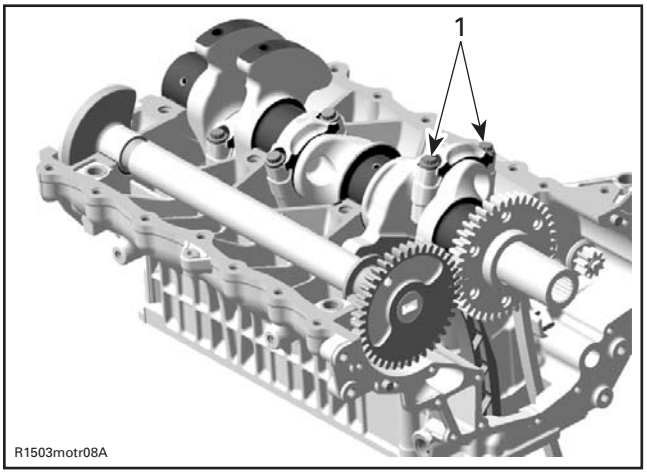

1. *Connecting rod screws*

NOTE: Before removing the connecting rod caps, mark them to remember the right position when reassembling.

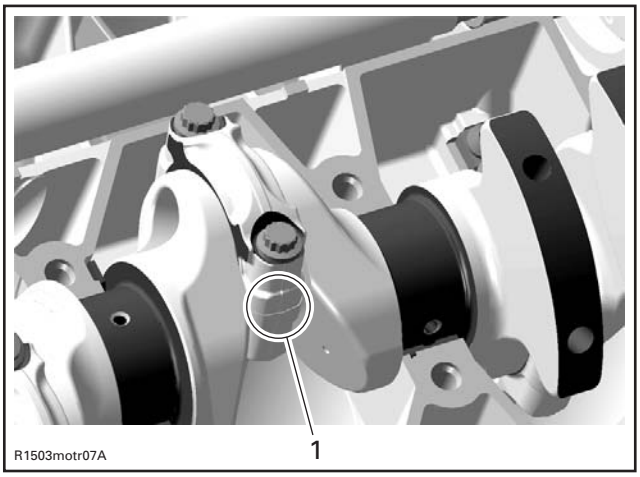

1. *Connecting rod mark*

3. Pull piston **no. 5** with connecting rod **no. 6** out of the cylinders.
4. Remove one piston circlip **no. 7** and discard it.

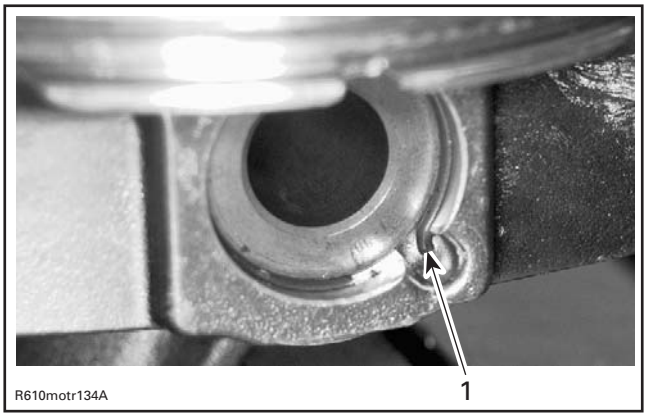

1. Piston circlip

NOTE: The removal of both piston circlips is not necessary to remove piston pin.

5. Push piston pin **no. 8** out of piston.

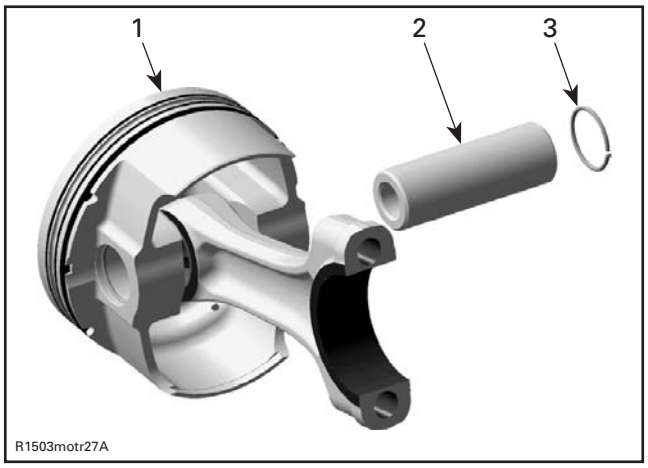

1. Piston
2. Piston pin
3. Circlip

6. Detach piston from connecting rod.

Inspecting the Connecting Rod

Connecting Rod Big End Axial Play

Using a feeler gauge, measure distance between butting face of connecting rod and crankshaft counterweight. If the distance exceeds specified tolerance, replace the worn part.

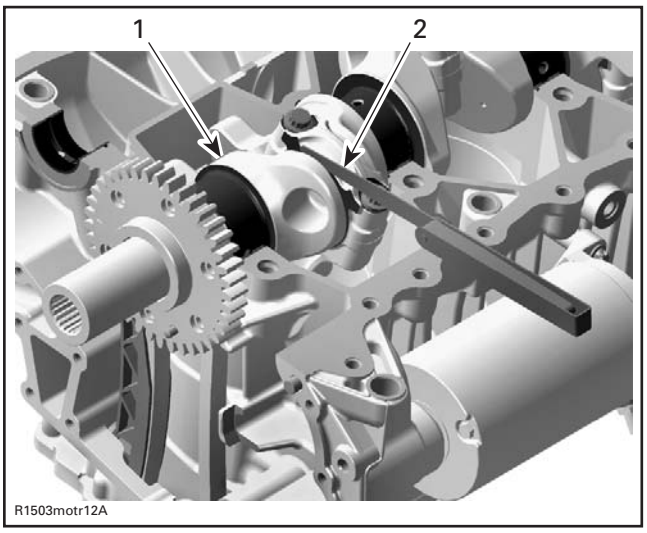

1. Crankshaft
2. Feeler gauge

CONNECTING ROD BIG END AXIAL PLAY	
NEW	0.100 mm - 0.352 mm (.004 in - .014 in)
SERVICE LIMIT	0.500 mm (.02 in)

Connecting Rod Small End Radial Play

Measure connecting rod small end.

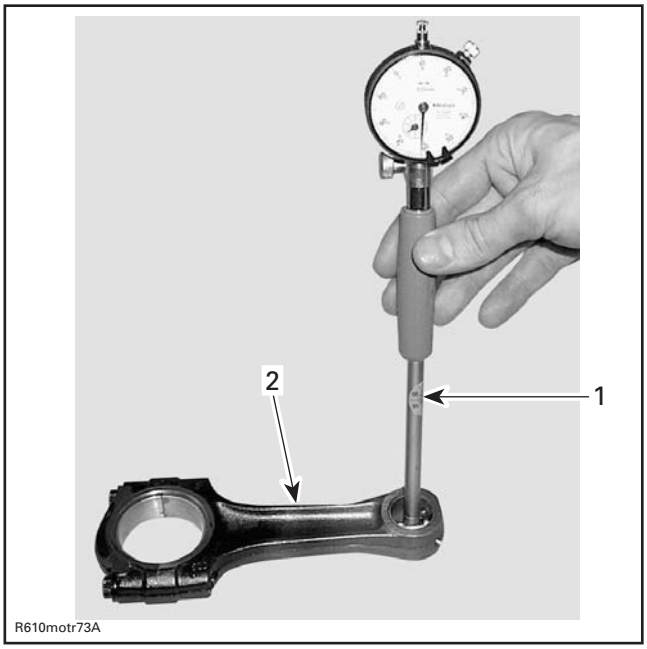

1. Bore gauge
2. Connecting rod

CONNECTING ROD SMALL END DIAMETER	
NEW	23.01 mm - 23.02 mm (.9059 in - .9063 in)
SERVICE LIMIT	23.07 mm (.908 in)

If the connecting rod small end diameter is out of specification, replace small end bearing sleeve **no. 9**.

NOTE: For small end bearing sleeve replacement contact a machine shop. After installing a **NEW** small end bearing sleeve on the connecting rod, the inner diameter and the oil holes need to be machined to specification.

Measure piston pins (refer to *PISTON PIN INSPECTION* in this subsection). Compare to inside diameter of connecting rod to obtain connecting rod small end radial play.

CONNECTING ROD SMALL END RADIAL PLAY	
SERVICE LIMIT	0.080 mm (.003 in)

Connecting Rod Big End Radial Play

Measure inside diameter of connecting rod big end. Compare to crankshaft pin.

To measure the connecting rod big end diameter, use the **OLD** screws **no. 4**.

Install the **OLD** bearings **no. 10** as they were mounted initially.

Tighten connecting rod screws, refer to *PISTON AND CONNECTING ROD INSTALLATION* in this subsection.

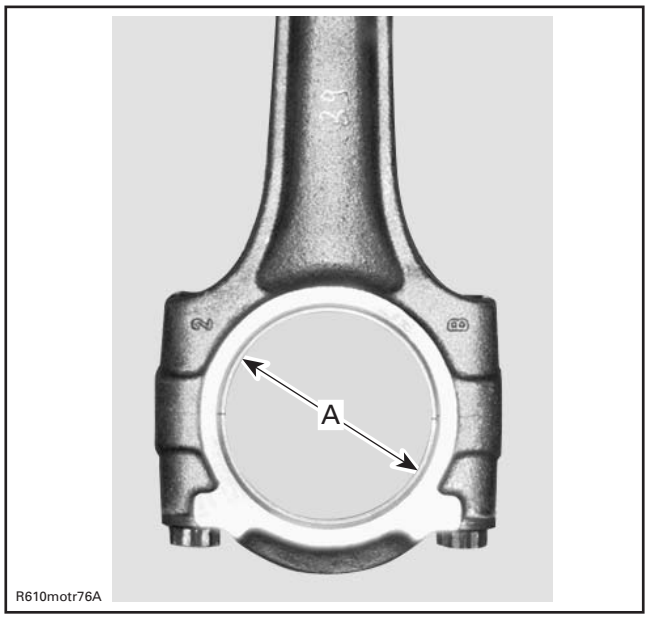

A. Connecting rod big end bearing

CONNECTING ROD BIG END DIAMETER	
SERVICE LIMIT	45.080 mm (1.775 in)

CONNECTING ROD BIG END RADIAL PLAY	
SERVICE LIMIT	0.09 mm (.0035 in)

Use **NEW** bearings, when connecting rod big end diameter is out of specification.

Inspecting the Piston Pin

Using synthetic abrasive woven, clean piston pin from deposits.

Inspect piston pin for scoring, cracking or other damages.

Measure piston pin. See the following illustration for the proper measurement position.

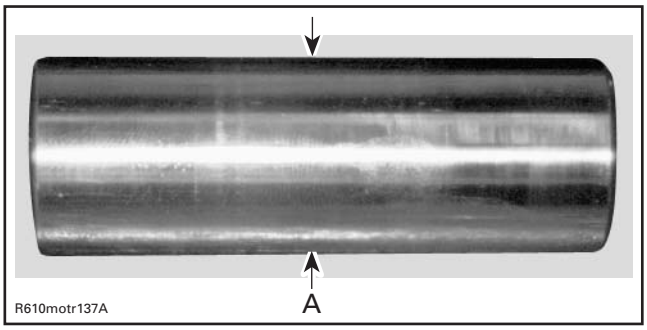

A. Piston pin diameter in the area of the bushing

PISTON PIN DIAMETER	
NEW	22.996 mm - 23.000 mm (.905 in - .906 in)
SERVICE LIMIT	22.990 mm (.905 in)

Measure connecting rod small end diameter (refer to *CONNECTING RODS INSPECTION* in this subsection) to check connecting rod small end radial play.

Inspecting the Piston

Inspect piston for scoring, cracking or other damages. Replace piston and piston rings if necessary.

Using a micrometer, measure piston at 18 mm (.709 in) perpendicularly (90°) to piston pin axis.

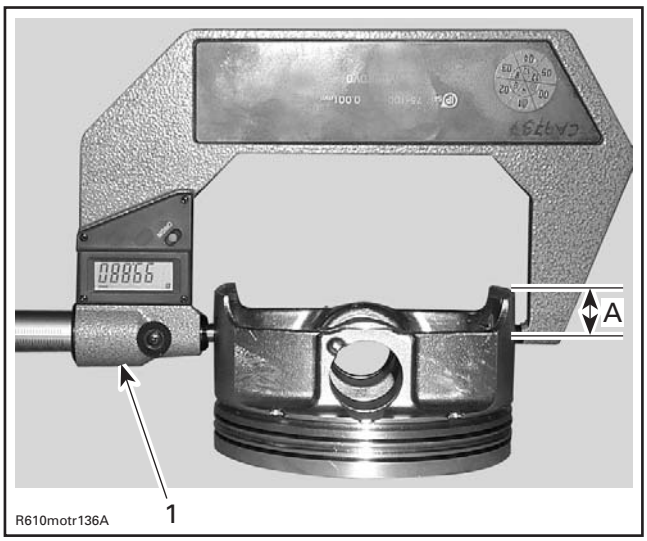

1. Measuring perpendicularly (90°) to piston pin axis
A. 18 mm (.709 in)

The measured dimension should be as described in the subsequent table. If not, replace piston.

PISTON MEASUREMENT	
130 AND 155 ENGINES	
NEW NOMINAL	99.951 mm - 99.969 mm (3.935 in - 3.936 in)
SERVICE LIMIT	99.90 mm (3.933 in)
215 AND 260 ENGINES	
NEW NOMINAL	99.931 mm - 99.949 mm (3.934 in - 3.935 in)
SERVICE LIMIT	99.90 mm (3.933 in)

Piston/Cylinder Wall Clearance

Adjust and lock a micrometer to the piston dimension.

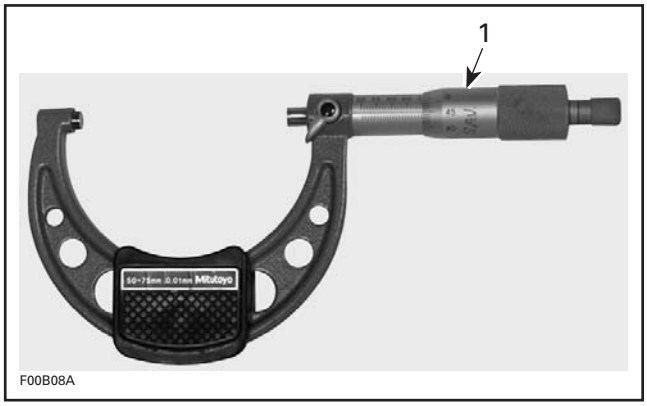

1. Micrometer set to the piston dimension

NOTE: Make sure used piston is not worn.

With the micrometer set to the dimension, adjust a cylinder bore gauge to the micrometer dimension and set the indicator to 0 (zero).

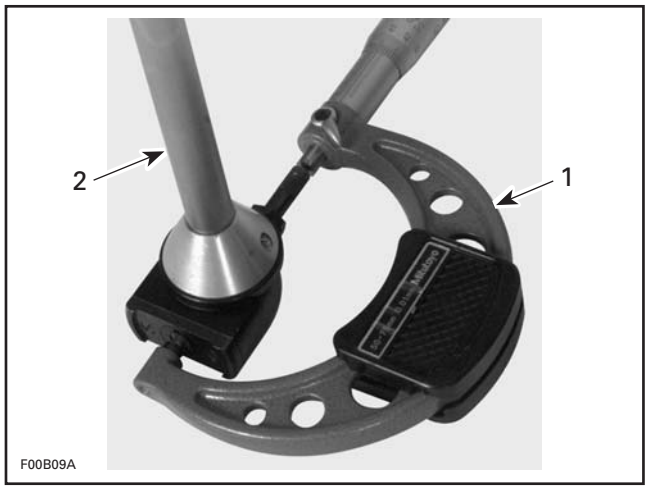

1. Use the micrometer to set the cylinder bore gauge
2. Dial bore gauge

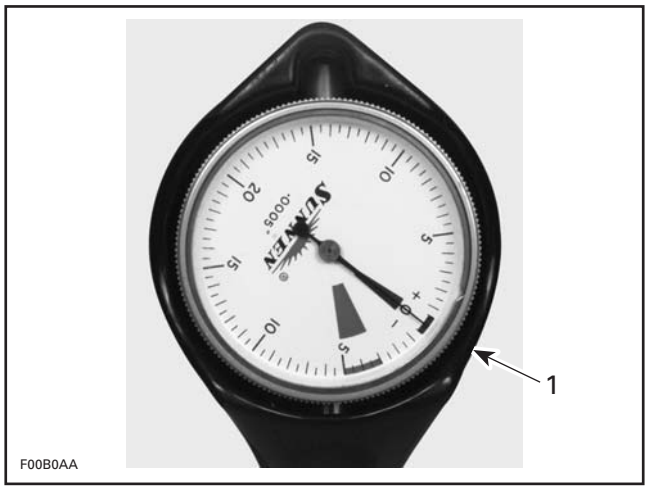

TYPICAL
1. Indicator set to 0 (zero)

NOTE: Make sure the cylinder bore gauge indicator is set exactly at the same position as with the micrometer, otherwise the reading will be false.

Position the dial bore gauge 62 mm (2.44 in) above cylinder base, measuring perpendicularly (90°) to piston pin axis.

Read the measurement on the cylinder bore gauge. The result is the exact piston/cylinder wall clearance.

PISTON/CYLINDER CLEARANCE	
130 AND 155 ENGINES	
NEW NOMINAL	0.024 mm - 0.056 mm (.001 in - .002 in)
SERVICE LIMIT	0.100 mm (.004 in)
215 AND 260 ENGINES	
NEW NOMINAL	0.044 mm - 0.076 mm (.0017 in - .003 in)
SERVICE LIMIT	0.100 mm (.004 in)

If clearance exceeds specified tolerance, re-hone cylinder sleeve and replace piston by an oversize one.

NOTE: It is not necessary to have all pistons replaced with an oversize if they are not all out of specification. Mixed standard size and oversize piston are allowed.

Assembling the Piston and the Connecting Rod

For installation, reverse the removal procedure. Pay attention to the following details.

Apply engine oil on the piston pin.

Insert piston pin into piston and connecting rod.

Install the NEW piston circlip.

REQUIRED TOOL
PISTON CIRCLIP INSTALLER (P/N 529 035 765)

NOTICE **Secure piston pin with new piston circlips.**

NOTE: Take care that the hook of the piston circlip is positioned properly.

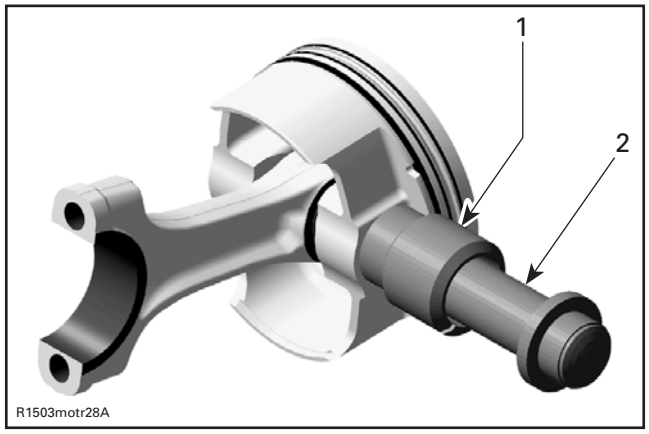

1. Sleeve with piston circlip inside
2. Assembly jig from piston clip installer

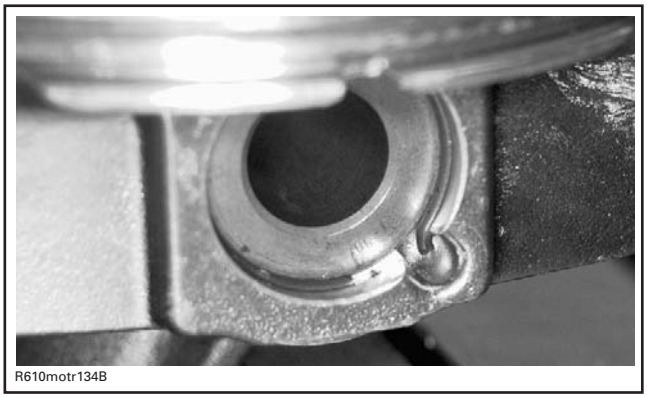

CORRECT POSITION OF THE PISTON CIRCLIP

Installing the Piston and the Connecting Rod

1. Using a piston ring compressor, slide piston into cylinder.

RECOMMENDED TOOL
SNAP-ON PISTON RING COMPRESSOR PLIERS (P/N RC980)

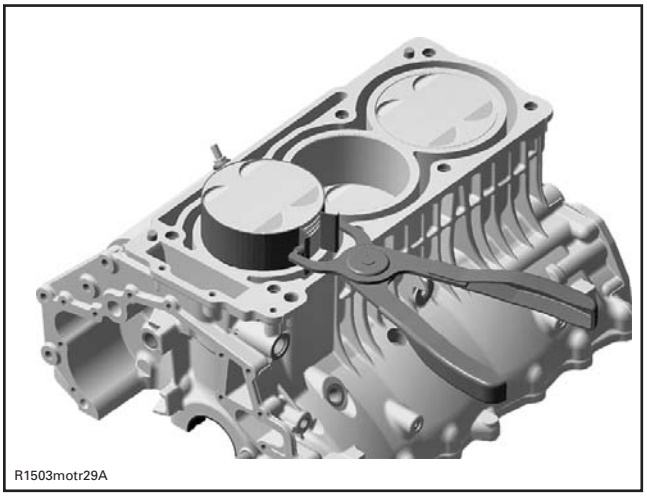

NOTICE **Install piston with punched arrow toward exhaust side.**

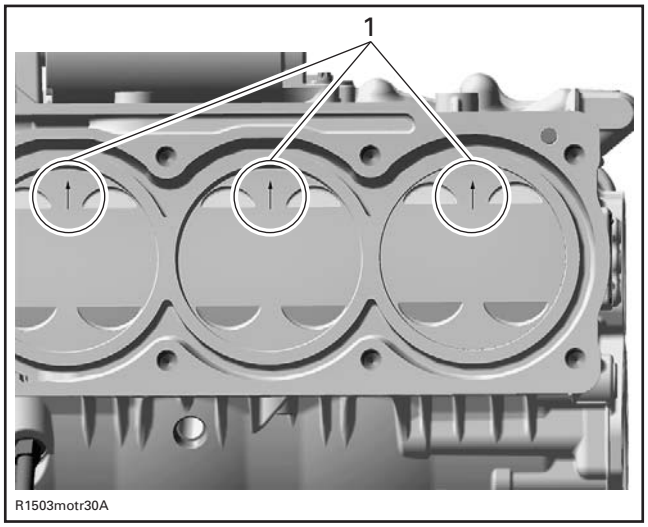

1. Arrows toward exhaust side

2. Correctly install bearings and carefully clean split surface on both sides (cracked area).

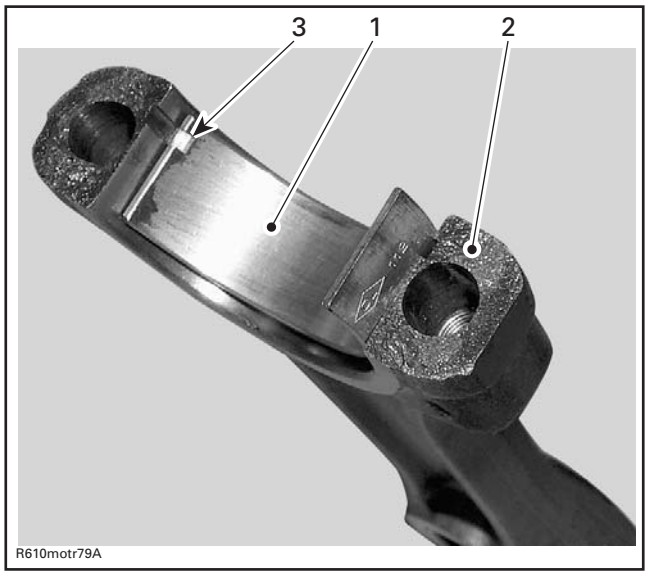

1. Half bearing of connecting rod big end
2. Split surface of the connecting rod
3. Protrusion of bearing in line with connecting rod groove

3. Torque **NEW** connecting rod screws as per following procedure:

NOTE: Do not apply any threadlocker product on threads of connecting rod screws.

NOTICE **All connecting rod screws must be torque FIRST according to step 1 before performing the step 2.**

TIGHTENING TORQUE		
Connecting rod screws	Step 1	45 N•m (33 lbf•ft)
	Step 2	+ 90°

NOTICE **Failure to strictly follow this procedure may cause screw to loosen and lead to engine damage. Knowing that the screws have been stretched from the previous installation, it is very important to use new screws at assembly.**

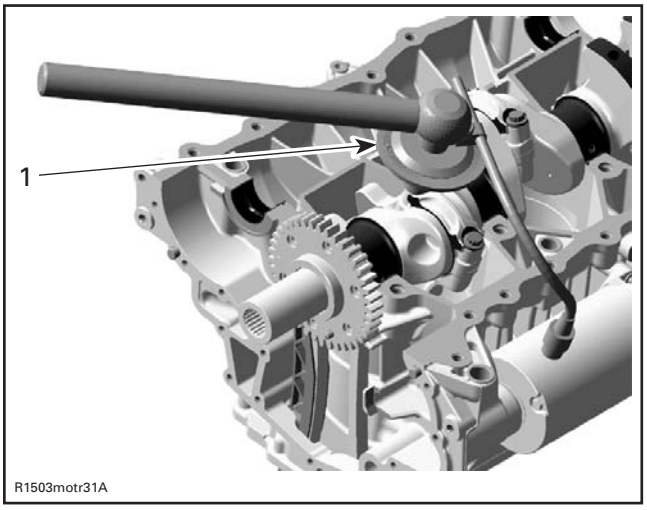

1. Angle torque wrench

PISTON RINGS

Removing the Piston Ring

Remove piston as described in this subsection.

Remove rings **no. 11**.

Inspecting the Piston Ring

Ring/Piston Groove Clearance

Using a feeler gauge measure each ring/piston groove clearance. If the clearance is too large, the piston and the piston rings should be replaced.

ENGINE TYPE	RING/PISTON GROOVE CLEARANCE	
RECTANGULAR		
All	New	0.025 mm - 0.070 mm (.001 in - .0028 in)
	Service limit	0.150 mm (.0059 in)
TAPER-FACE		
All	New	0.015 mm - 0.060 mm (.0006 in - .0024 in)
	Service limit	0.150 mm (.0059 in)
OIL SCRAPER RING		
130 and 155	New	0.020 mm - 0.055 mm (.0008 in - .0022 in)
	Service limit	0.150 mm (.0059 in)
215 and 260	New	0.010 mm to 0.180 mm (.0004 in to .0071 in)
	Service limit	0.200 mm (.0079 in)

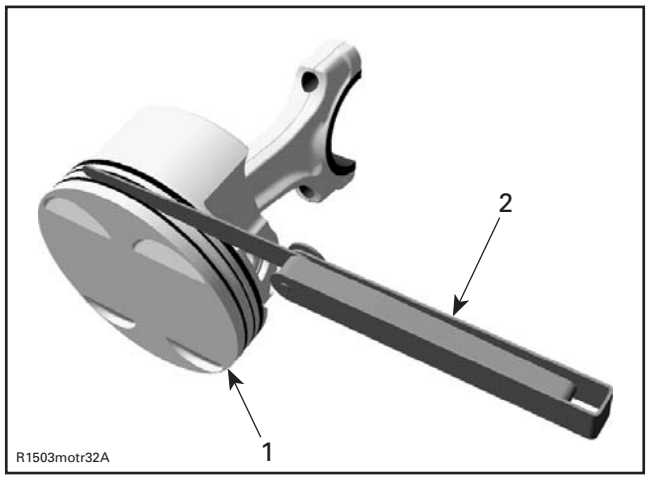

1. *Piston*
2. *Filler gauge*

Ring End Gap

ENGINE TYPE	RING END GAP	
RECTANGULAR		
All	New	0.30 mm - 0.50 mm (.012 in - .02 in)
130 and 155	Service limit	1.50 mm (.0591 in)
215 and 260		1.20 mm (.047 in)
TAPER-FACE		
All	New	0.35 mm - 0.55 mm (.014 in - .022 in)
130 and 155	Service limit	1.50 mm (.0591 in)
215 and 260		1.20 mm (.047 in)
OIL SCRAPER RING		
130 and 155	New	0.35 mm - 0.50 mm (.014 in - .02 in)
	Service limit	1.50 mm (.0591 in)
215 and 260	New	0.20 mm - 0.70 mm (.008 in - .028 in)
	Service limit	1.20 mm (.047 in)

Measure position for ring end gap in the area of 8 mm to 16 mm (.315 in to .63 in) from top of cylinder.

NOTE: In order to correctly position the ring in the cylinder, use piston as a pusher.

Using a feeler gauge, check ring end gap. Replace ring if gap exceeds service limit.

Installing the Piston Ring

For installation, reverse the removal procedure. Pay attention to the following details.

Install rings in the following order and layout:

PISTON RING INSTALLATION		
ORDER	RING	POSITION
FIRST STEP	Oil scraper ring	Stamped dot facing UP
SECOND STEP	Taper-face ring	Stamped "E" and "TOP" facing UP
THIRD STEP	Rectangular ring	Stamped "E" and "TOP" facing UP

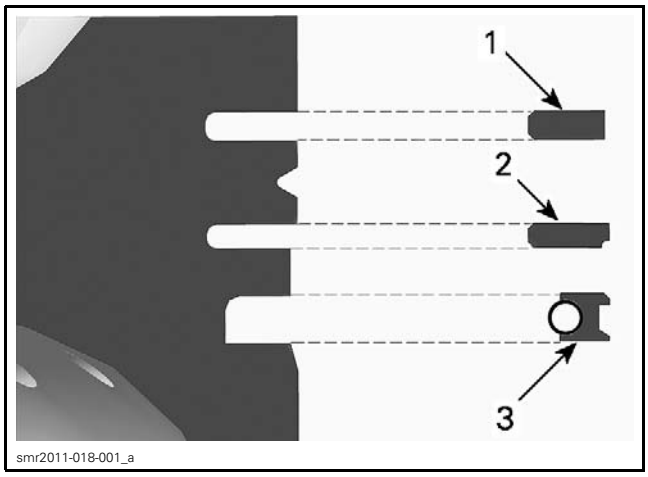

1. *Rectangular ring*
2. *Taper-face ring*
3. *Oil scraper ring*

NOTICE **Ensure that top and second rings are not interchanged.**

NOTE: Use a ring expander to prevent breakage during installation. The oil ring must be installed by hand.

Check that rings rotate smoothly after installation.

Space the piston ring end gaps 120° apart and do not align the gaps with the piston pin bore or the thrust side axis.

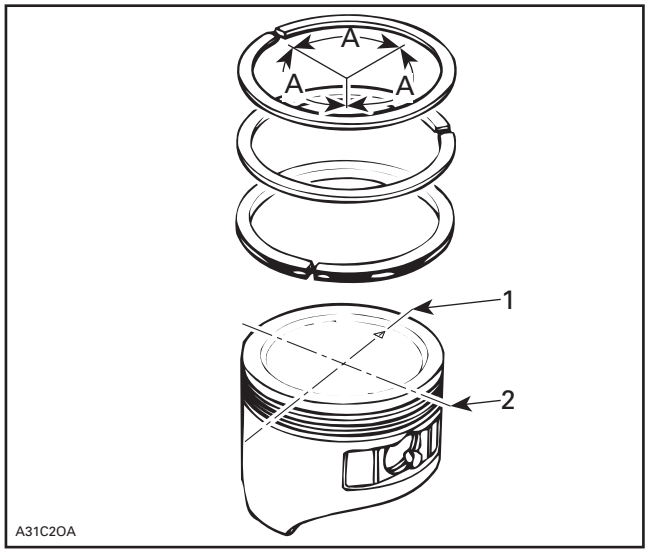

1. *DO NOT align ring gap with piston trust side axis*
2. *DO NOT align ring gap with piston pin bore axis*

A. *120°*

CRANKSHAFT

Crankshaft Locking Procedure

NOTICE **The crankshaft must be locked at TDC for removal and installation of crankshaft, balancer shaft and camshaft.**

NOTE: When the crankshaft is locked, the piston of cylinder 3 is at ignition TDC.

Remove:

- Intake manifold (refer to *INTAKE MANIFOLD* subsection)
- Spark plugs
- Cylinder head cover (refer to *CYLINDER HEAD* subsection
- Crankshaft access plug screw.

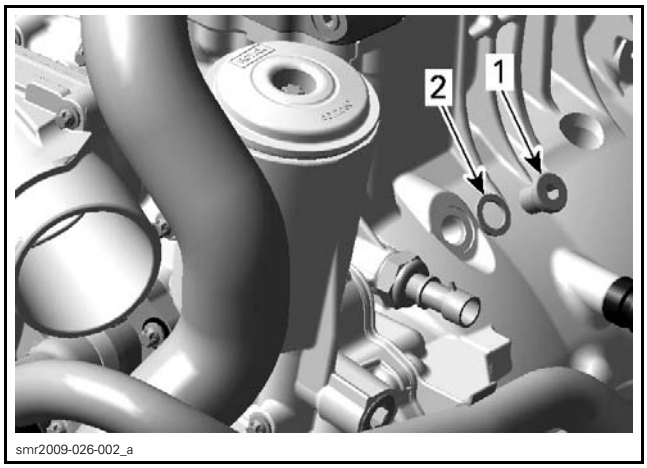

1. *Crankshaft access plug screw*
2. *Gasket ring*

Turn engine counterclockwise.

Bring piston of cylinder 3 to ignition TDC, using a dial gauge or another similarly suitable tool.

NOTICE **Do not scratch or damage piston and cylinder surface.**

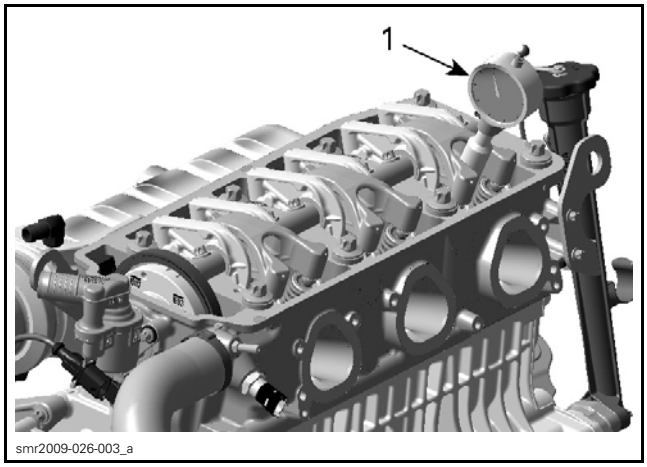

1. *Dial gauge*

NOTE: When the piston of cylinder 3 is at ignition TDC, the position lines on oil separator cover must be lined up as shown in the following illustration.

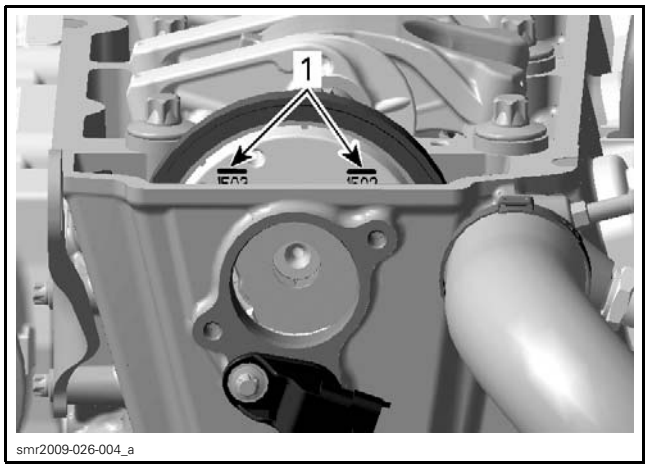

1. Position lines

Use a small screwdriver to check if the groove in the crankshaft is aligned with the hole.

In this position, lock the crankshaft.

REQUIRED TOOL	
CRANKSHAFT LOCKING TOOL (P/N 529 035 821)	

Removing the Crankshaft

1. Disassemble *CYLINDER BLOCK* as per procedure described in this subsection.
2. Remove connecting rod screws. Refer to *PISTONS AND CONNECTING RODS* in this subsection.
3. Remove thrust washers **no. 16**.

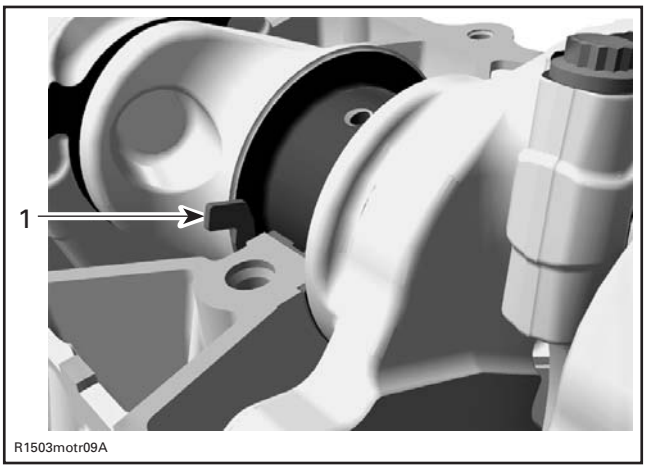

1. Thrust washer

4. Remove crankshaft **no. 17**.

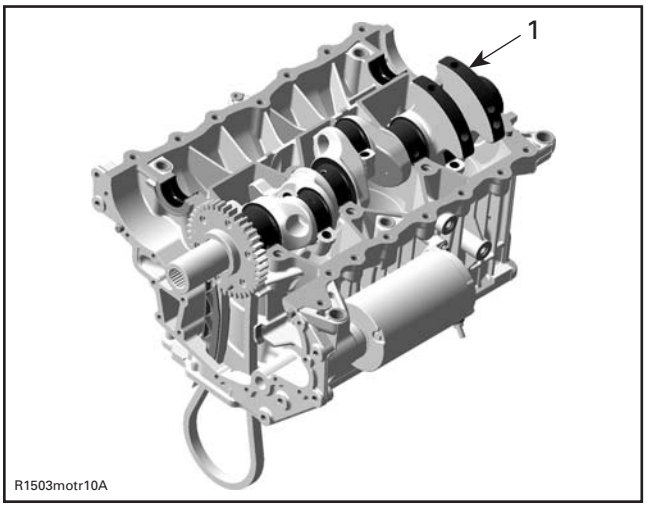

1. Crankshaft

Inspecting the Crankshaft

Inspecting the Crankshaft Gear

Replace crankshaft if the gears are worn or otherwise damaged.

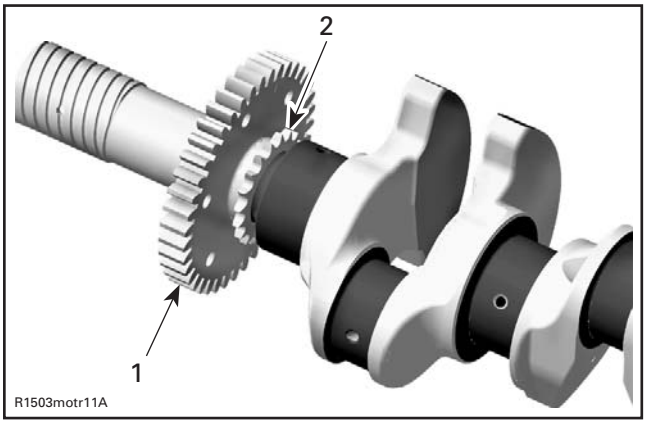

1. Balancer gear
2. Crankshaft timing gear

Crankshaft Radial Play

Measure all crankshaft journals. Compare to inside diameter of crankshaft bearings (elsewhere in this subsection).

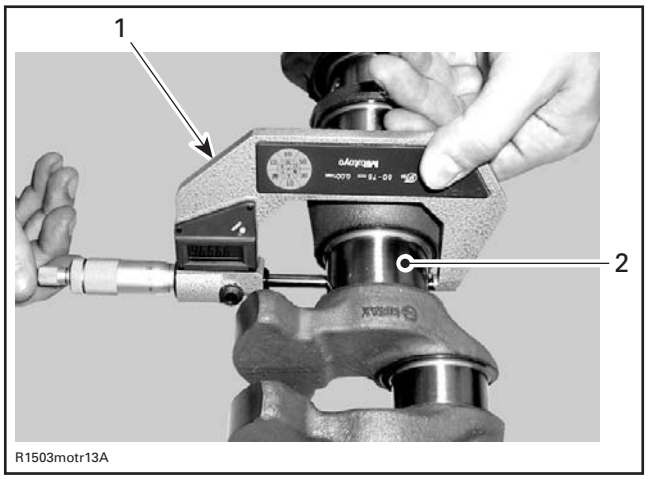

1. *Micrometer*
2. *Crankshaft area for bearing*

CRANKSHAFT JOURNAL DIAMETER	
NEW	49.991 mm - 50.01 mm (1.9681 in - 1.9689 in)
SERVICE LIMIT	49.95 mm (1.9665 in)

CRANKSHAFT JOURNAL RADIAL CLEARANCE	
SERVICE LIMIT	0.07 mm (.0028 in)

Crankshaft Pin

Measure all crankshaft pin diameters. Compare to inside diameter of connecting rod bearings (elsewhere in this subsection).

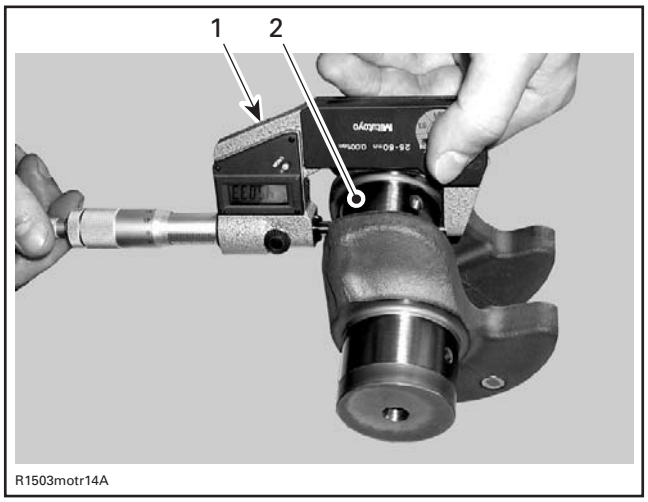

1. *Micrometer*
2. *Crankshaft pin area for bearing*

CRANKSHAFT PIN DIAMETER	
NEW	45.032 mm - 45.048 mm (1.7729 in - 1.7735 in)
SERVICE LIMIT	45.029 mm (1.7728 in)

CRANKSHAFT PIN RADIAL CLEARANCE	
SERVICE LIMIT	0.09 mm (.0035 in)

Crankshaft Axial Clearance

When assembling the cylinder-block, measure the crankshaft axial clearance.

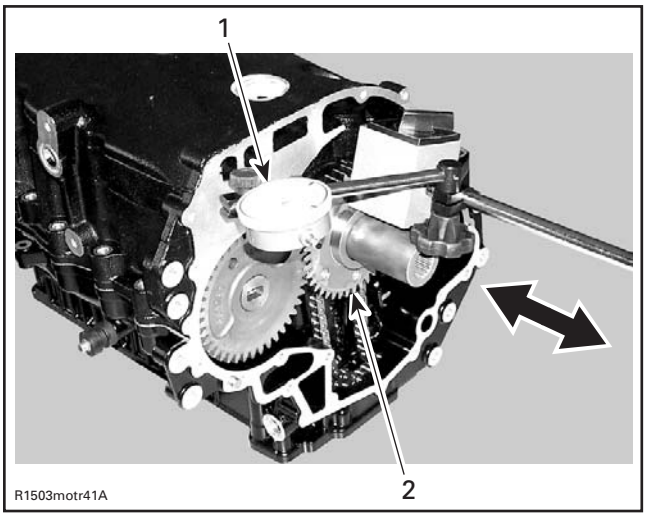

1. *Dial gauge*
2. *Crankshaft*

CRANKSHAFT AXIAL CLEARANCE	
NEW	0.08 mm - 0.22 mm (.003 in - .009 in)
SERVICE LIMIT	0.35 mm (.014 in)

Installing the Crankshaft

For installation, reverse the removal procedure. Pay attention to following details.

NOTE: Before installing the crankshaft, make sure that the timing chain is on the crankshaft and the chain guide has been installed first. Those parts cannot be installed when the crankshaft is in place.

NOTICE **Crankshaft and balancer shaft marks have to be aligned.**

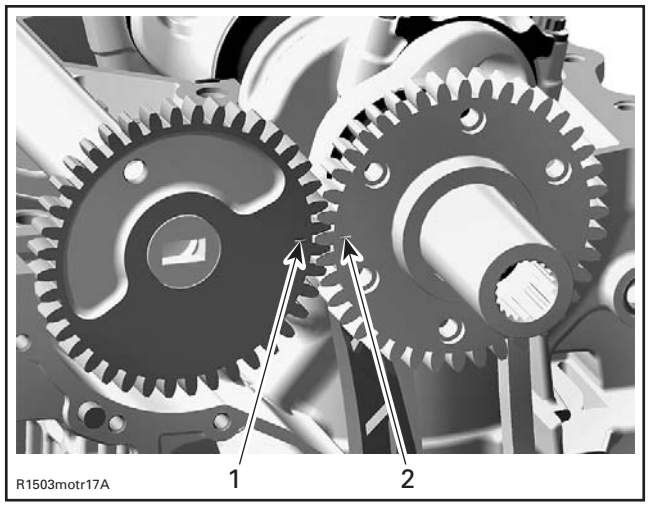

1. *Mark on balancer shaft*
2. *Mark on crankshaft*

For correct installation of the connecting rods, refer to *PISTONS AND CONNECTING RODS* in this subsection.

NOTICE **It is absolutely necessary to follow this procedure. Otherwise severe engine damage can occur.**

Insert thrust washers **no. 16** as soon as crankshaft is in place as per following illustration.

NOTICE **Never forget thrust washers on center of crankshaft to control axial adjustment.**

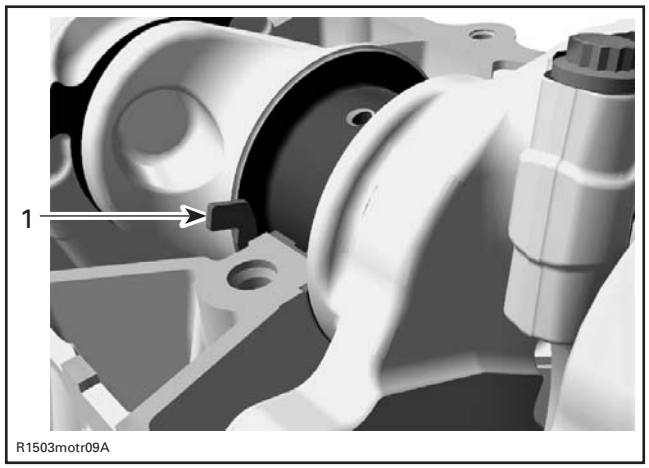

THRUST WASHER INSERT DIRECTION
1. *Thrust washer*

NOTICE **Thrust washers have to be flush with the cylinder block sealing surface.**

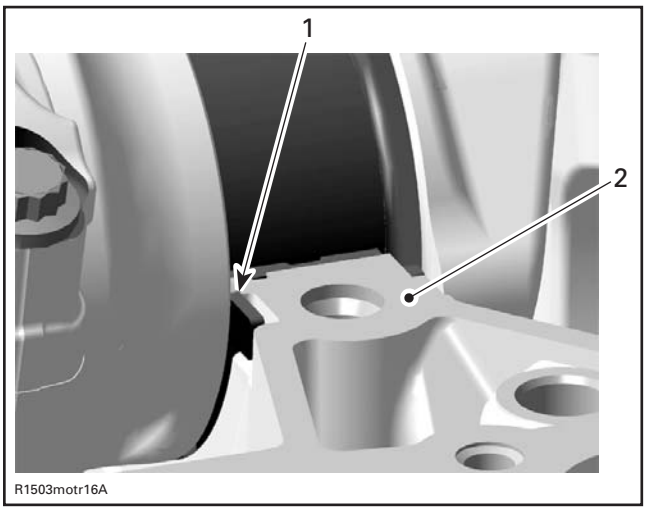

1. *Thrust washer*
2. *Sealing surface*

Install cylinder block lower half. Refer to *CYLINDER BLOCK* in this subsection.

Position crankshaft at TDC before installing the camshaft and the rocker arms (refer to *CYLINDER HEAD* subsection).

REQUIRED TOOL	
CRANKSHAFT LOCKING TOOL (P/N 529 035 821)	

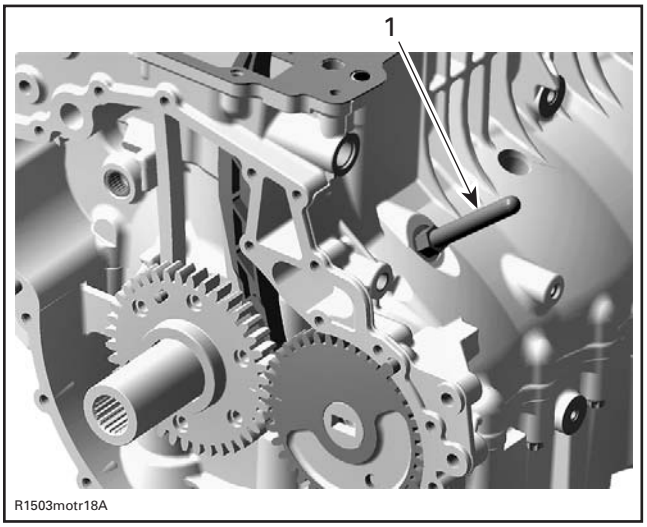

1. *Crankshaft locking tool*

BALANCER SHAFT

Removing the Balancer Shaft

1. Disassemble *CYLINDER BLOCK* as per procedure described in this subsection.
2. Remove thrust washers **no. 18**.

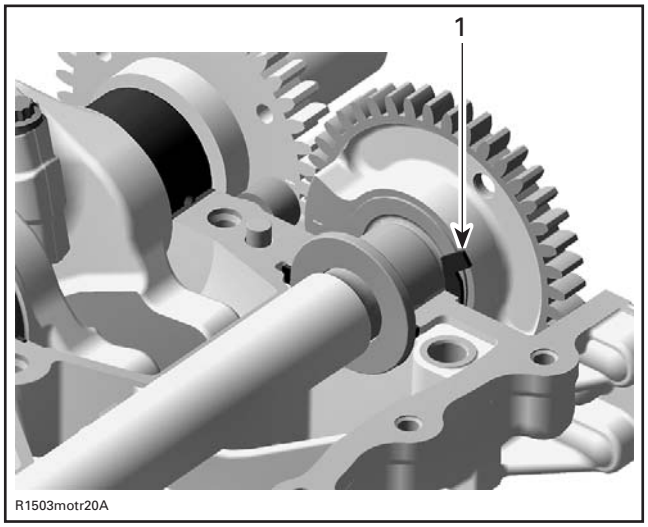

1. Thrust washer

3. Remove balancer shaft.

Inspecting the Balancer Shaft

Check balancer shaft and replace if damaged.

If the gear on the balancer shaft is damaged, replace balancer shaft.

Check gear on the crankshaft at the same time and replace crankshaft if necessary (refer to *CRANKSHAFT* above).

Balancer Shaft Bearing Seat Play

Measure all balancer shaft bearing seats. Compare to inside diameter of balancer shaft bearings (see *CYLINDER BLOCK INSPECTION* in this subsection).

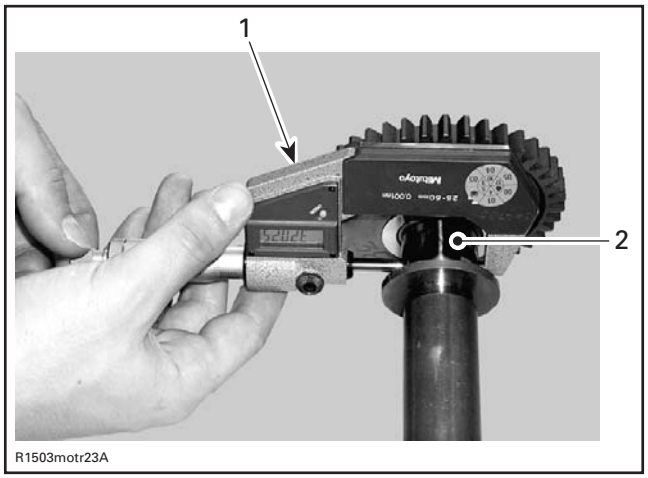

1. Micrometer
2. Balancer shaft area for bearing

BALANCER SHAFT SEAT DIAMETER	
NEW	31.984 mm - 32.000 mm (1.2592 in - 1.2598 in)
SERVICE LIMIT	31.950 mm (1.2579 in)

BALANCER SHAFT SEAT RADIAL CLEARANCE	
SERVICE LIMIT	0.07 mm (.0028 in)

Balancer Shaft Axial Clearance

When assembling the cylinder-block, measure the balance shaft axial play.

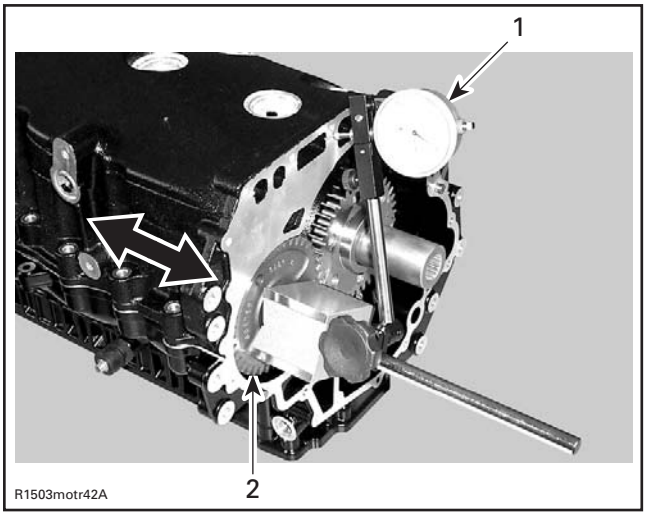

1. Dial gauge
2. Balancer shaft

BALANCER SHAFT AXIAL CLEARANCE	
NEW	0.02 mm - 0.25 mm (.001 in - .01 in)
SERVICE LIMIT	0.35 mm (.014 in)

Installing the Balancer Shaft

For installation, reverse the removal procedure. Pay attention to following details.

NOTICE **Balancer shaft and crankshaft marks have to be aligned.**

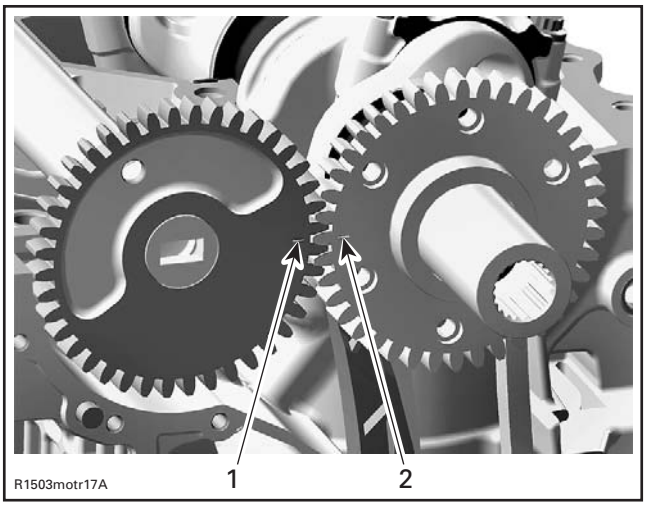

1. *Mark on balancer shaft*
2. *Mark on crankshaft*

NOTICE Never forget thrust washers no. **18** on PTO side to control axial adjustment on balancer.

Insert thrust washers as soon as balancer shaft is in place as per following illustration.

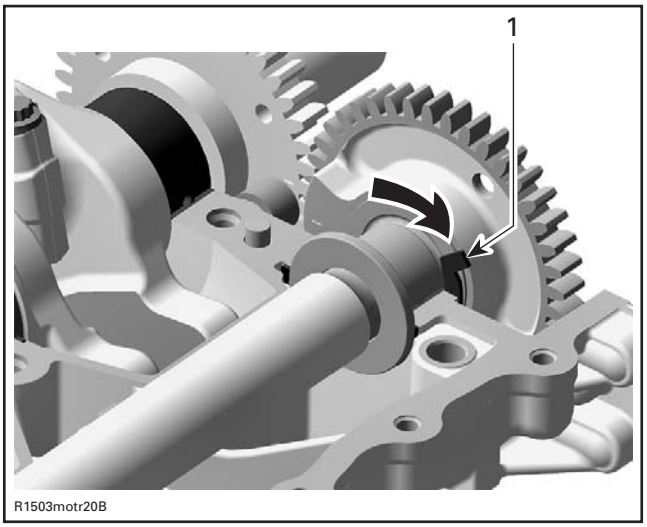

THRUST WASHER INSERT DIRECTION
1. *Thrust washer*

NOTICE Thrust washers have to be flush with the cylinder block sealing surface.

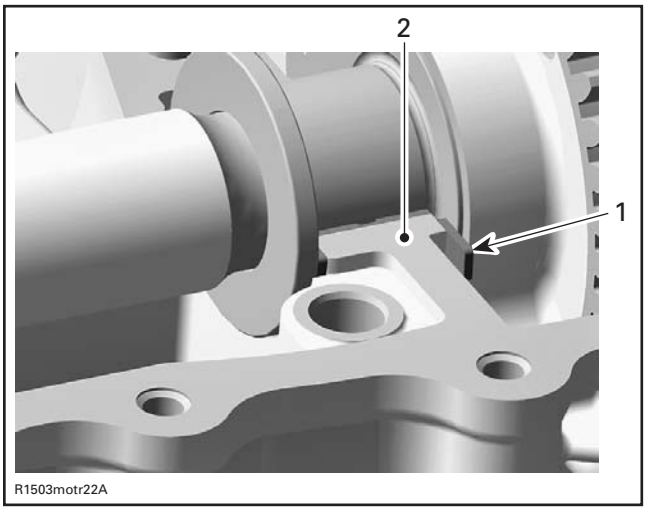

1. *Thrust washer*
2. *Sealing surface*

Install cylinder block lower half. Refer to *CYLINDER BLOCK* in this subsection.

Reassemble engine in accordance with the proper assembly procedures.

CYLINDER BLOCK

Disassembling the Cylinder Block

Remove:

- Engine oil (refer to *LUBRICATION SYSTEM* subsection)
- Engine from vehicle (refer to *ENGINE REMOVAL AND INSTALLATION* subsection)
- Cylinder head (refer to *CYLINDER HEAD* subsection)
- PTO housing, starter gear and starter drive (refer to *PTO HOUSING AND MAGNETO* subsection)
- Oil suction pump (refer to *LUBRICATION SYSTEM* subsection)
- Engine mounting brackets
- Oil reservoir plug screw **no. 12** with O-ring **no. 13**
- Cylinder block screws **no. 14** and **no. 15**
- Cylinder block lower half
- Crankshaft cover with O-ring
- Balancer shaft (refer to *BALANCER SHAFT* in this subsection)
- Crankshaft (refer to *CRANKSHAFT* in this subsection)
- Piston with connecting rod (refer to *PISTONS AND CONNECTING RODS* in this subsection).

Bearings

When bearings **no. 19** and **no. 20** need to be removed from the cylinder block, mark them to identify the correct position at installation. See the following illustration for an example:

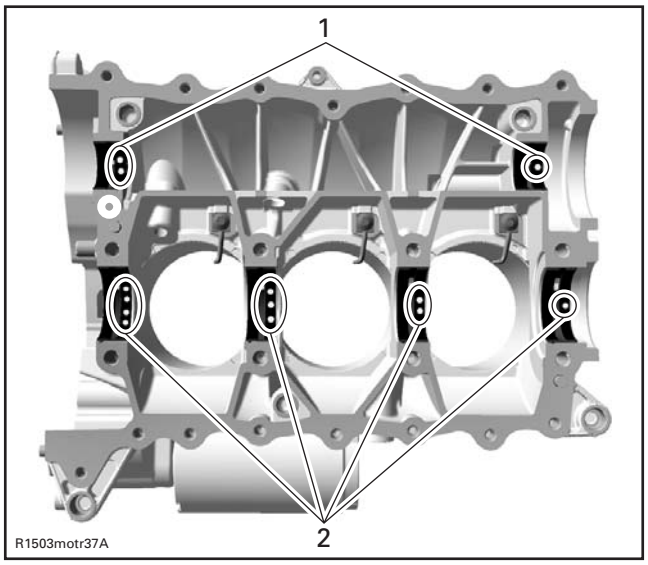

1. Marks on balancer shaft bearings
2. Marks on crankshaft bearings

Inspecting the Cylinder Block

Cylinder

Check cylinder for cracks, scoring and wear ridges on the top and bottom of the cylinder. If so, replace cylinder.

Cylinder Taper

Measure cylinder bore and if it is out of specifications, re-hone cylinder sleeve and replace piston with first oversize.

NOTE: It is not necessary to have all cylinders re-honed if they are not all out of specification. Mixed standard size and oversize cylinders are allowed.

Measure cylinder bore at 3 recommended positions. See the following illustration.

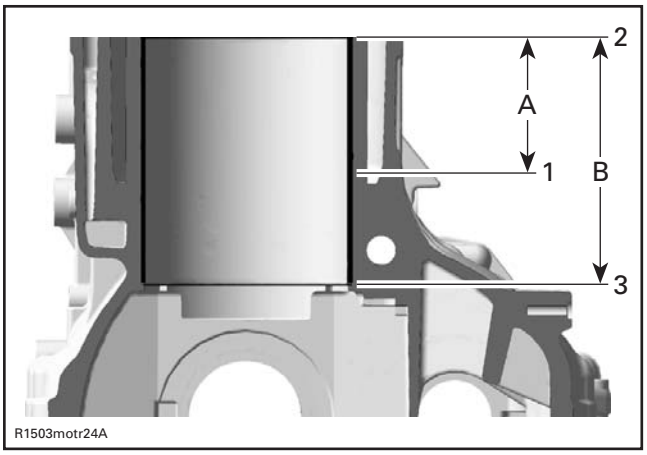

1. First measuring diameter
2. Second measuring diameter
3. Third measuring diameter

A. 60 mm (2.362 in)
B. 110 mm (4.331 in)

CYLINDER TAPER IN DIAMETER	
NEW MAXIMUM	0.038 mm (.001 in)
SERVICE LIMIT	0.100 mm (.004 in)

Distance between measurements should not exceed the service limit mentioned above.

Cylinder Out of Round

Measure cylinder diameter in piston axis direction from top of cylinder. Take an other measurement 90° from first one and compare.

NOTE: Take the same measuring points as described in *CYLINDER TAPER* above.

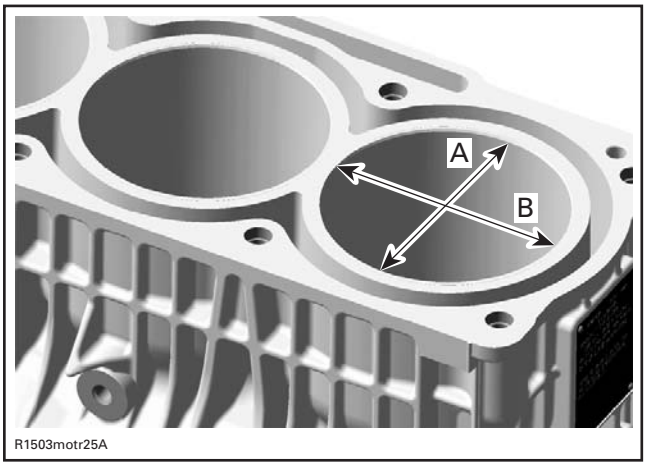

A. Perpendicular to crankshaft axis
B. Parallel to crankshaft axis

CYLINDER OUT OF ROUND	
NEW MAXIMUM	0.008 mm (.0003 in)
SERVICE LIMIT	0.015 mm (.0006 in)

Bearings

To measure the wear of the crankshaft bearings **no. 19** and balancer shaft bearings **no. 20**, both cylinder block halves with **OLD** bearings have to be screwed together as per tightening procedure described below.

Measure the inside diameter of the bearings with a bore gauge.

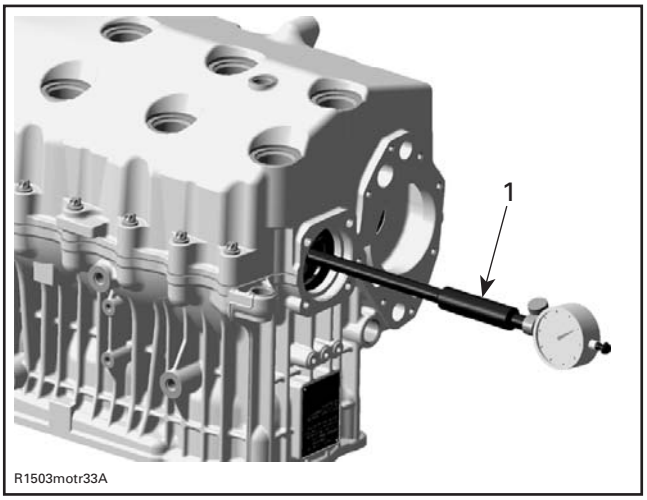

ENGINE UPSIDE DOWN
1. Bore gauge

CRANKSHAFT BEARING INSIDE DIAMETER	
SERVICE LIMIT	50.1 mm (1.9724 in)

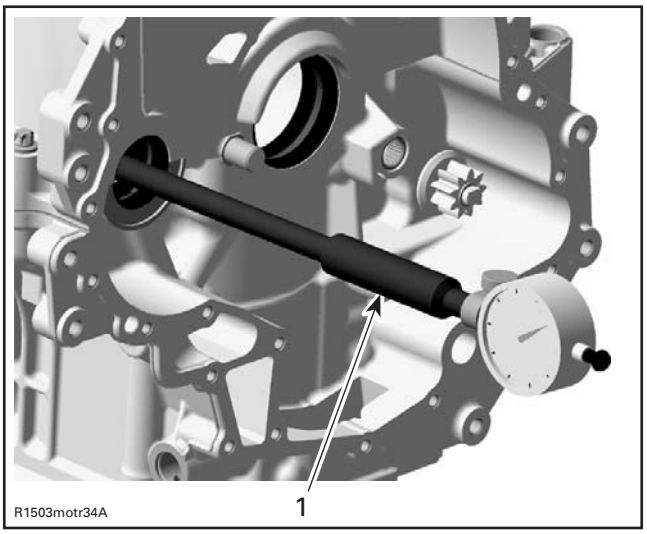

ENGINE UPSIDE DOWN
1. Bore gauge

BALANCER SHAFT BEARING INSIDE DIAMETER	
SERVICE LIMIT	32.11 mm (1.2642 in)

Replace bearings if they are out of specifications.

Assembling the Cylinder Block

For assembly, reverse the disassembly procedure. Pay attention to the following details.

Torque Banjo screw to specification.

TIGHTENING TORQUE	
Banjo screw	19 N•m (168 lbf•**in**)

Use **NEW** bearings when diameters are out of specification.

If **OLD** bearings can be used again, make sure they are at the same position as they were before.

Correctly install bearings. Top crankshaft bearing halves have a bore which has to be placed in the upper cylinder block.

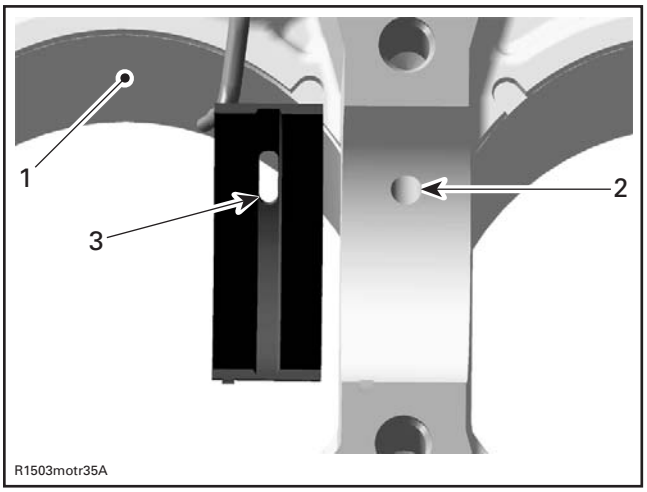

1. Cylinder block upper half
2. Oil bore in cylinder block
3. Oil bore in bearing

Bearings have to be flush with the cylinder block split surface and their protrusions have to fit in the notched areas in the cylinder block seat.

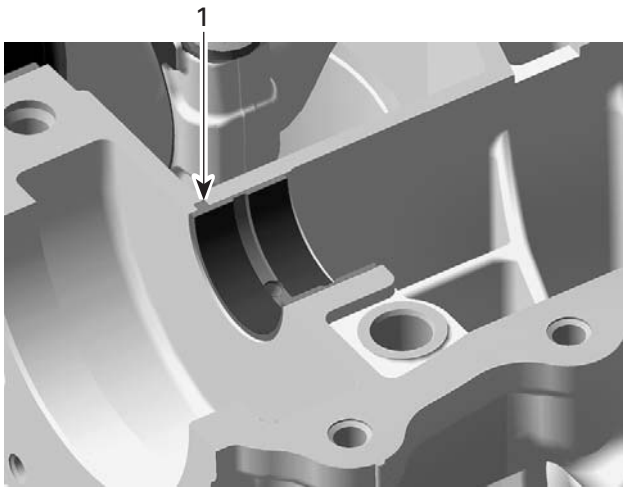

R1503motr36A

1. Bearing protrusion in cylinder block notch

Apply engine oil on all bearings, in the bottom area of the cylinder bore and also on the band of the piston ring compressor tool.

For proper installation of pistons, refer to *PISTONS AND CONNECTING RODS* in this subsection.

NOTE: Before installing the crankshaft, make sure that the timing chain is on the crankshaft and the chain guide has been installed first. Those parts cannot be installed after as the crankshaft is in place.

Clean oil passages and make sure they are not clogged.

Clean all metal components in a solvent.

Cylinder block mating surfaces are best cleaned using a combination of the LOCTITE CHISEL (GASKET REMOVER) (P/N 413 708 500) and a brass brush. Brush a first pass in one direction then make the final brushing perpendicularly (90°) to the first pass (cross hatch).

NOTICE **Do not wipe with rags. Use a new clean hand towel only.**

IMPORTANT: When beginning the application of the crankcase sealant, the assembly and the first torquing should be done within 10 minutes. It is suggested to have all you need on hand to save time.

NOTE: It is recommended to apply this specific sealant as described here to get an uniform application without lumps. If you do not use the roller method, you may use your finger to uniformly distribute this sealant.

Apply LOCTITE 5910 (P/N 293 800 081) on mating surfaces.

NOTICE **Do not use other products to seal crankcase. Do not use an activator with the Loctite 5910. Using other products or non silicone-based sealant over a previously sealed crankcase with Loctite 5910 will lead to poor adhesion and possibly a leaking crankcase.**

NOTE: Refer to the product label for the sealant curing time. Respect the manufacturer's recommendations prior to start engine.

Use a plexiglass plate and apply some sealant on it. Use a soft rubber roller of 50 mm - 75 mm (2 in - 3 in) available in arts products suppliers for printmaking, roll the sealant to get a thin uniform coat on the plate (spread as necessary). When ready, apply the sealant on crankcase mating surfaces.

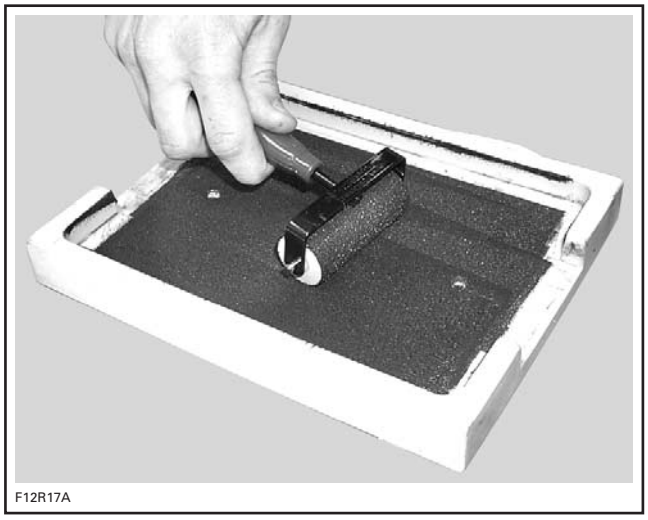

F12R17A

Do not apply in excess as it will spread out inside crankcase.

Tighten cylinder block screws as per following procedure:

Apply LOCTITE 243 (BLUE) (P/N 293 800 060) on screw threads.

Tighten M10 cylinder block screws **no. 14** using the following sequence.

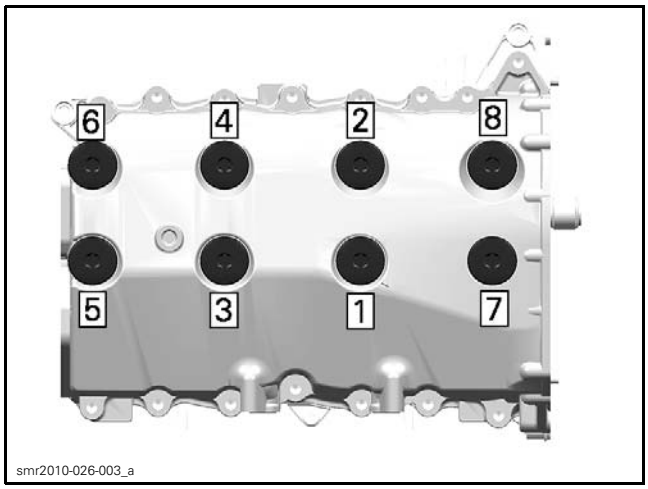

NOTICE All M10 cylinder block screws must be torque FIRST according to step 1 before performing to step 2.

TIGHTENING TORQUE		
M10 cylinder block screws	Step 1	40 N•m (30 lbf•ft)
	Step 2	55 N•m (41 lbf•ft)

Tighten M8 cylinder block screws **no. 15** using the following sequence.

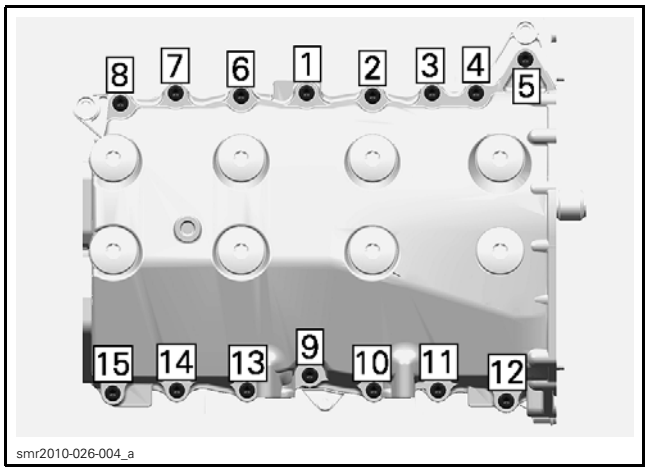

TIGHTENING TORQUE	
M8 cylinder block screws	30 N•m (22 lbf•ft)

NOTE: Before continuing the assembly process, the axial clearance of balancer shaft and crankshaft has to be checked. Refer to *CRANKSHAFT* and *BALANCER SHAFT* in this subsection for the procedure.

Before mounting the engine bracket, install the crankshaft cover. Apply engine oil on O-ring and press cover in. Crankshaft cover has to be flush with cylinder block surface.

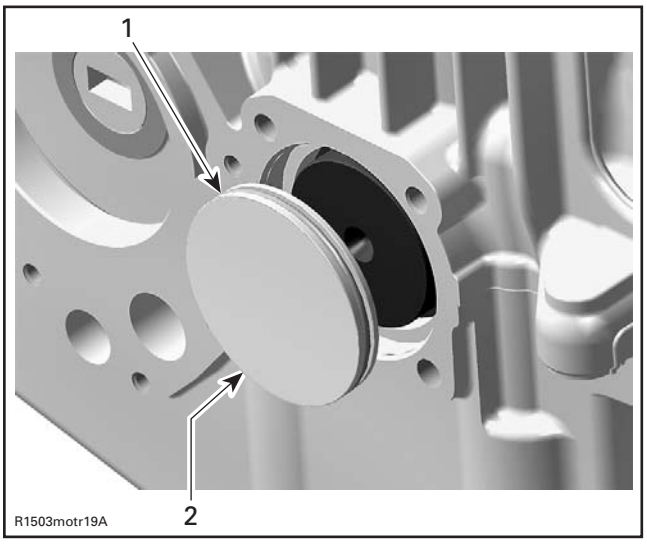

1. O-ring
2. Crankshaft cover

Position crankshaft at TDC before installing the camshaft and the rocker arms (refer to *CYLINDER HEAD* subsection).

REQUIRED TOOL	
CRANKSHAFT LOCKING TOOL (P/N 529 035 821)	

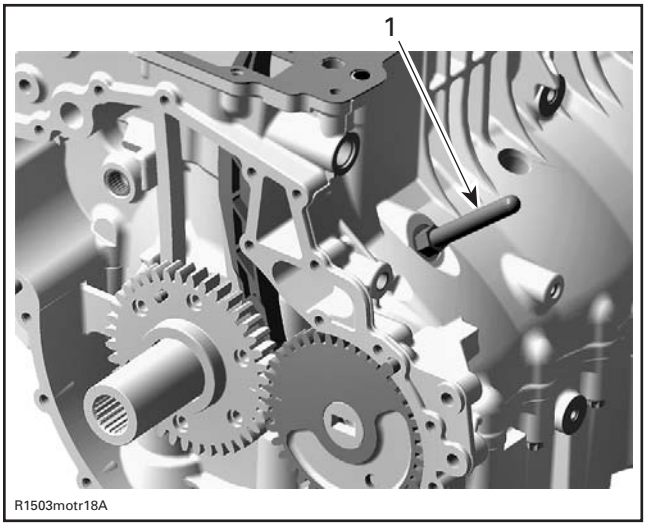

1. Crankshaft locking tool

Reassemble engine in accordance with the proper assembly procedures.

SUPERCHARGER (215 AND 260 ENGINES)

SERVICE TOOLS

Description	Part Number	Page
4-PIN SOCKET	529 035 948	8, 11
BEARING SUPPORT/PUSHER	529 035 950	10–11
CAMSHAFT LOCKING TOOL	529 035 839	3
NEEDLE BEARING PUSHER	529 036 237	13
SUPERCHARGER GEAR HOLDER	529 036 025	4
SUPERCHARGER RETAINING KEY	529 036 027	7–8, 14
SUPPORT PLATE	529 035 947	4, 7, 10–11
TORX ADAPTER	529 035 938	6, 15

SERVICE PRODUCTS

Description	Part Number	Page
ISOFLEX GREASE TOPAS NB 52	293 550 021	12
LOCTITE 243 (BLUE)	293 800 060	11–12, 14–15
LOCTITE 5910	293 800 081	14
SUPER LUBE GREASE	293 550 030	15

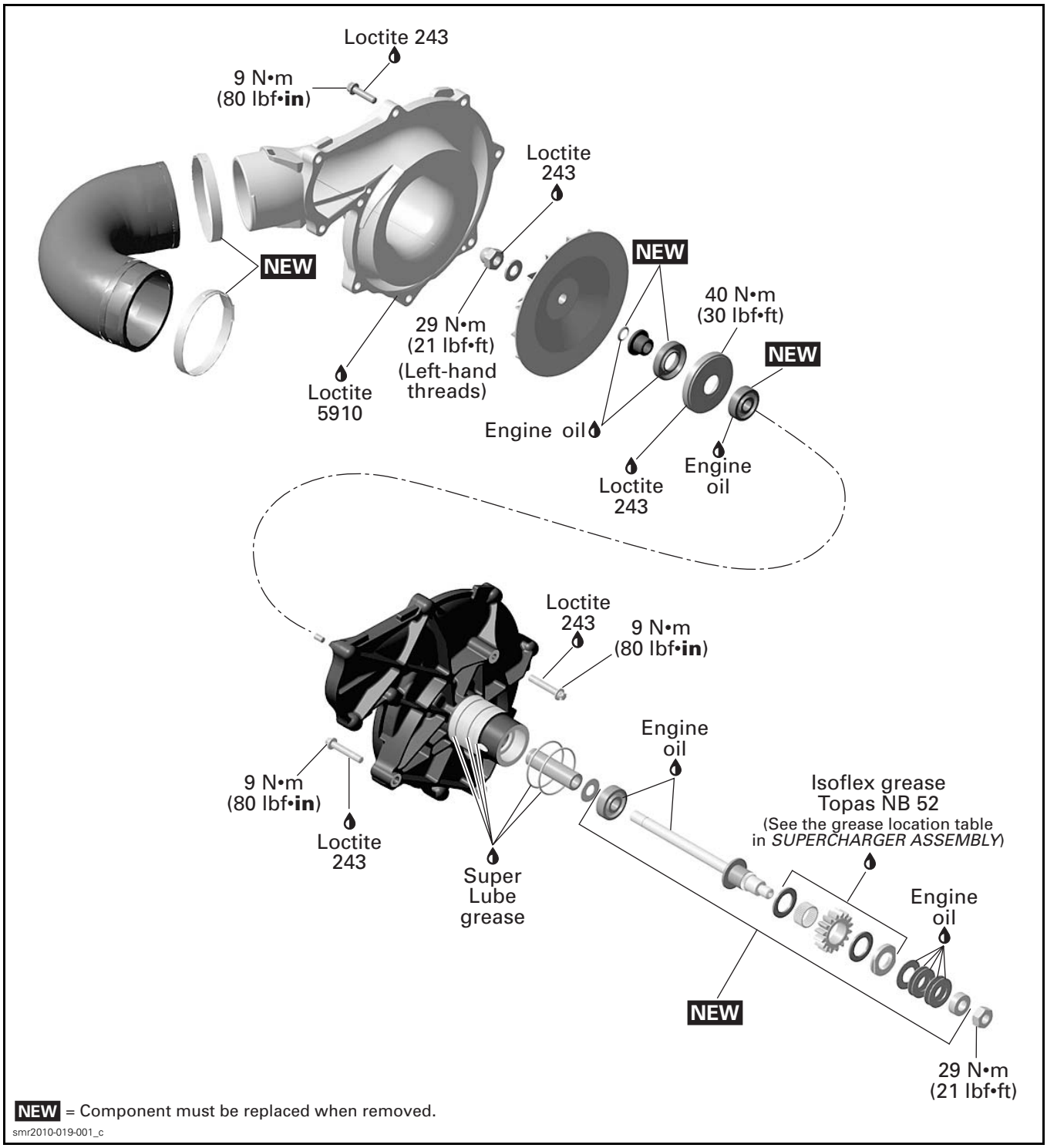

NEW = Component must be replaced when removed.

smr2010-019-001_c

INSPECTION

SUPERCHARGER INLET CLEANLINESS

NOTE: A lower than usual maximum RPM at full throttle might be caused by a dirty supercharger inlet.

To access supercharger. Refer to *SUPERCHARGER ACCESS* in this subsection.

Visually inspect supercharger inlet side for oil, salt or any other deposits.

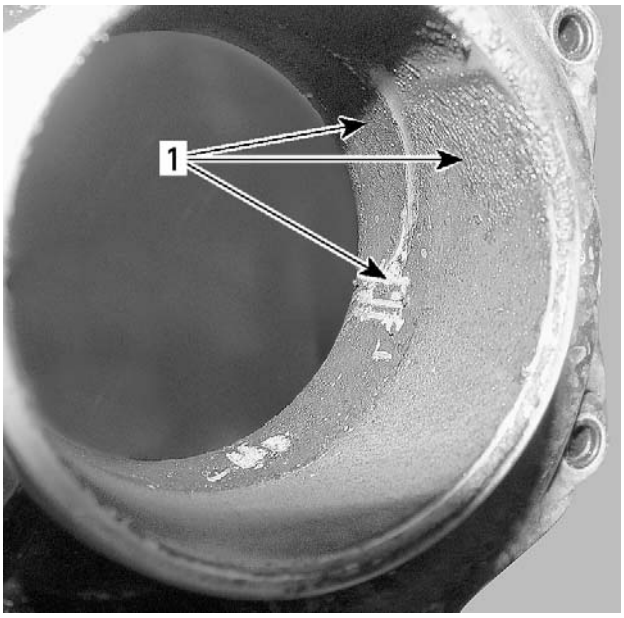

smr2006-012-010_a

1. *Dirt here*

If dirt is found, proceed as follows.

1. Remove supercharger and perform the clutch slipping moment test. Inspect bearings and friction clutch. Replace bearings and clutch components as necessary.
2. Separate supercharger housing.

NOTE: Since supercharger is disassembled, it is recommended to completely inspect it.

3. Clean internal housing and turbine using a brush and cleaning solvent to get rid of oil deposits.
4. Blow dry with compressed air.

NOTICE **Do not let turbine spin when using compressed air.**

5. Complete usual assembly procedures as described in this subsection.

TESTING THE SLIPPING MOMENT OF THE CLUTCH

Supercharger Installed on the Engine

To access supercharger. Refer to *SUPERCHARGER ACCESS* in this subsection.

Remove cylinder head cover, refer to *CYLINDER HEAD* subsection.

Remove spark plugs.

Turn engine by rotating the supercharger nut counterclockwise until the position lines on oil separator cover are lined up as shown in the following illustration.

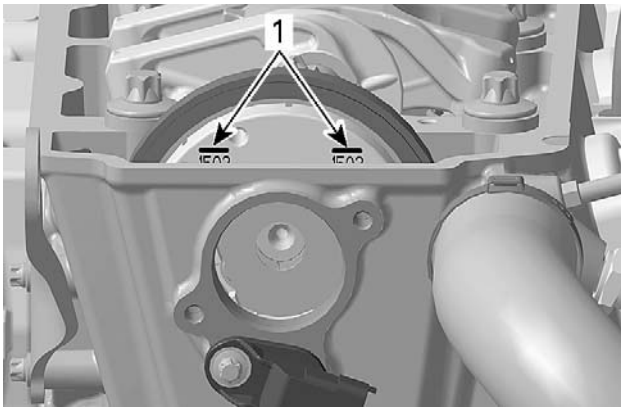

smr2009-025-006_a

1. *Position lines*

Lock camshaft to prevent camshaft rotation while checking slipping moment of supercharger.

REQUIRED TOOL
CAMSHAFT LOCKING TOOL (P/N 529 035 839)

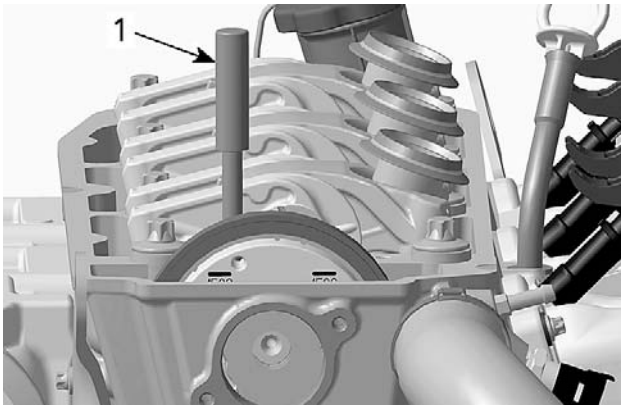

smr2009-025-007_b

1. *Camshaft locking tool*

Check slipping moment counterclockwise by using a torque wrench with actual torque viewer. A mirror is useful to see the viewer.

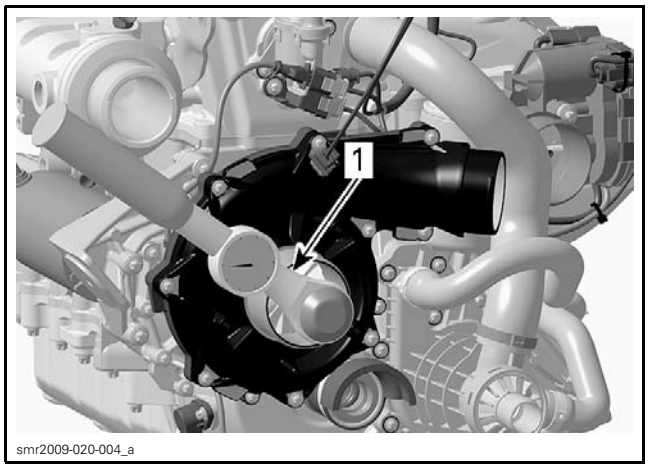

1. Torque wrench

NOTE: Before checking the supercharger slipping moment on a new or rebuilt supercharger, it is recommended to turn the clutch for a minimum of 3 complete revolutions. This will dissipate grease or oil on the friction shims for a precise reading.

Supercharger should start to turn at a torque within the specified values.

SLIPPING MOMENT	
New supercharger	9 N•m to 14 N•m (80 lbf•**in** to 124 lbf•**in**)
Break-in supercharger	8 N•m to 12 N•m (71 lbf•**in** to 106 lbf•**in**)

If the torque is not within specifications, repair supercharger clutch. Verify supercharger clutch components as per *INSPECTING THE SUPERCHARGER* in this subsection.

Supercharger Removed from Engine (Bench Test)

Mount supercharger on support plate.

Hold supercharger gear with supercharger gear holder.

REQUIRED TOOLS	
SUPPORT PLATE (P/N 529 035 947)	
SUPERCHARGER GEAR HOLDER (P/N 529 036 025)	

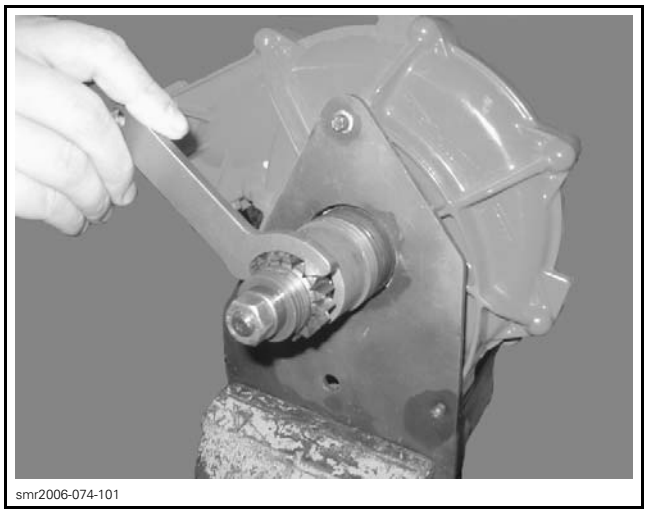

Check slipping moment counterclockwise by using a torque wrench with a viewer.

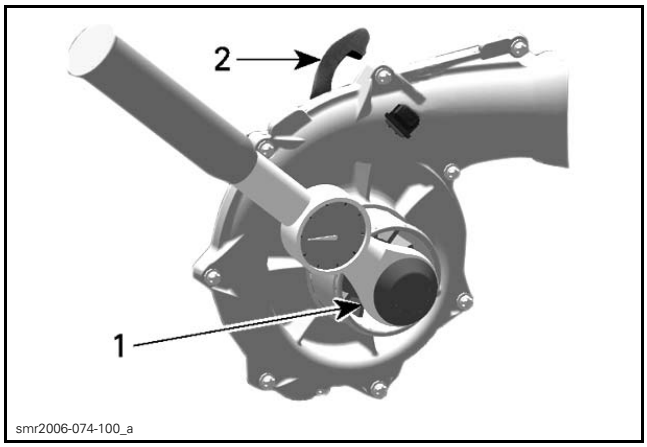

1. Torque wrench
2. Gear holder

NOTE: Before checking the supercharger slipping moment on a new or rebuilt supercharger, it is recommended to turn the clutch for a minimum of 3 complete revolutions. This will dissipate grease or oil on the friction shims for a proper reading.

Supercharger should start to turn at a torque within the specified values.

SLIPPING MOMENT	
New supercharger	9 N•m to 14 N•m (80 lbf•**in** to 124 lbf•**in**)
Break-in supercharger	8 N•m to 12 N•m (71 lbf•**in** to 106 lbf•**in**)

If the torque is not within specification, repair supercharger clutch. Verify supercharger clutch components as per *INSPECTING THE SUPERCHARGER* in this subsection.

TROUBLESHOOTING

The following is provided to help in diagnosing the probable source of troubles. It is a guideline and it should not be assumed to list all possible problems.

Always check for fault codes. If a fault code is detected, service the fault code first. Refer to *DIAGNOSTIC AND FAULT CODES* subsection.

ENGINE WILL NOT START (ENGINE DOES NOT TURN OVER)

1. **Supercharger seized or obstructed**
   - *Inspect and repair supercharger.*

ENGINE LACKS ACCELERATION OR POWER (DOES NOT REACH MAXIMUM RPM)

1. **Supercharger inlet is dirty**
   - *Check and clean supercharger inlet.*
   - *Check engine oil. Siphon excess of oil.*
2. **Supercharger slipping clutch defective**
   - *Check slipping clutch moment.*
   - *Repair supercharger if out of specification.*

PROCEDURES

SUPERCHARGER

Supercharger Access

On **models with suspension**, remove the moving deck. Refer to *BODY (GTX, RXT AND WAKE PRO SERIES)* subsection for proper procedure.

Remove the air intake silencer. Refer to the appropriate subsection according to model:

– *AIR INTAKE SYSTEM (MODELS WITHOUT SUSPENSION)*
– *AIR INTAKE SYSTEM (MODELS WITH SUSPENSION)*.

Remove the air intake silencer support.

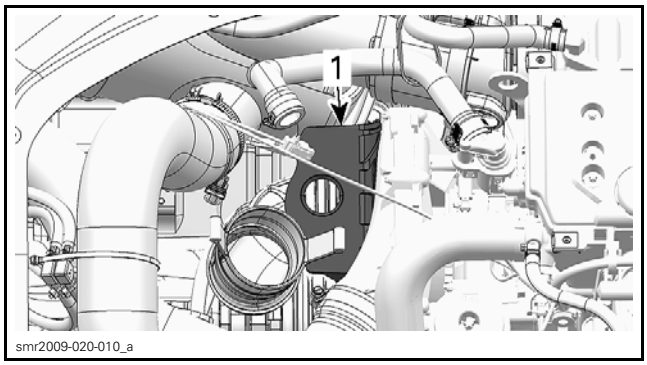

1. Air intake silencer support

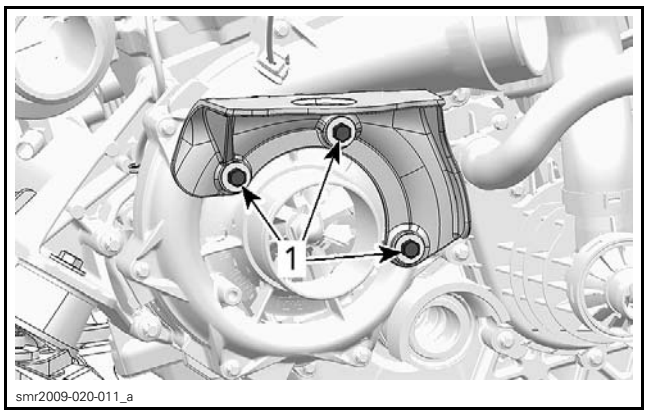

MANY PARTS REMOVED FOR CLARITY PURPOSE
1. Support screws

Removing the Supercharger

Remove air inlet and outlet hoses from supercharger.

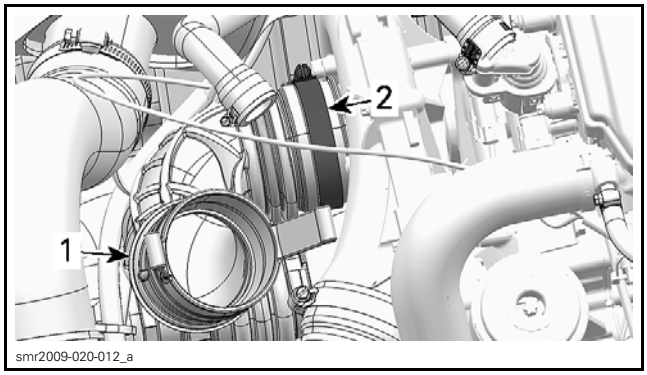

1. Air inlet hose
2. Hose clamp

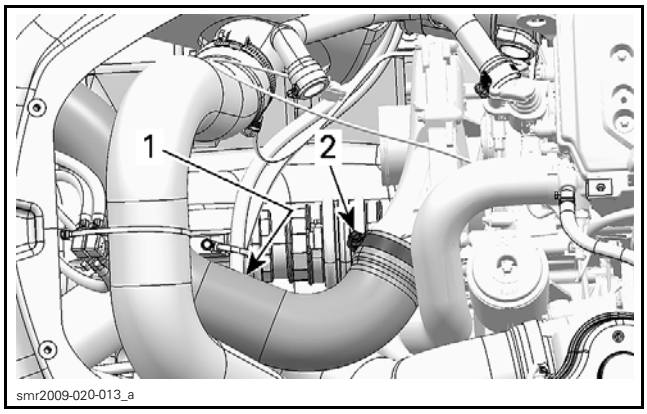

1. *Air outlet hose*
2. *Hose clamp*

Unscrew blow-by valve screws and move it aside to make room.

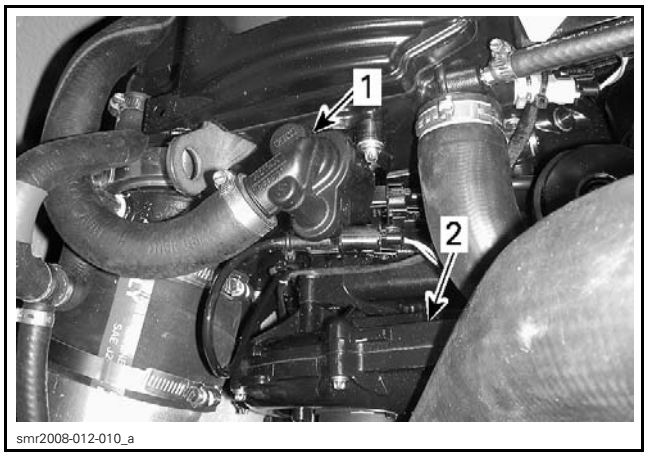

1. *Blow-by valve*
2. *Supercharger*

Using a marker, trace a mark on rubber adapter and exhaust pipe.

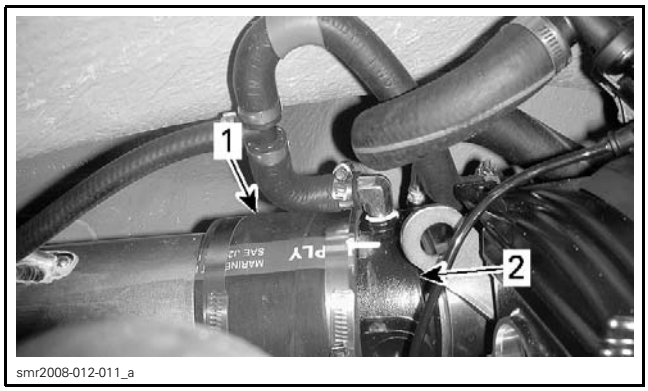

1. *Rubber adapter*
2. *Exhaust pipe*

Loosen clamp securing rubber adapter to exhaust pipe.

Detach muffler strap.

Move muffler back (± 5 cm (2 in)).

Remove retaining screws and pull out the supercharger.

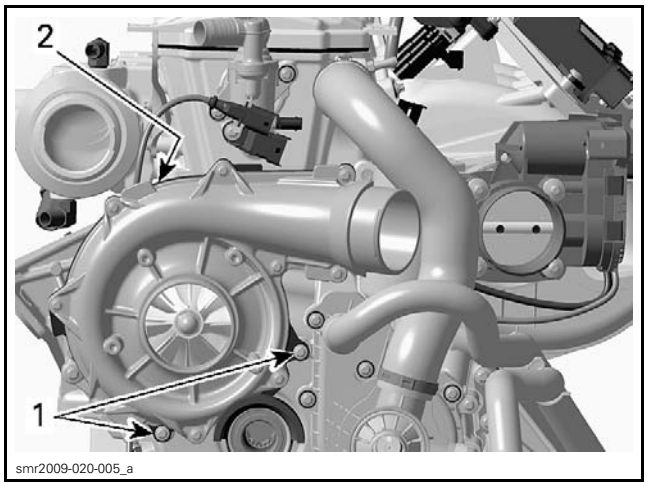

1. *Retaining screws*
2. *Upper retaining screw (hidden behind the supercharger)*

NOTE: Use the following tool to remove the upper retaining screw.

REQUIRED TOOL	
TORX ADAPTER (P/N 529 035 938)	

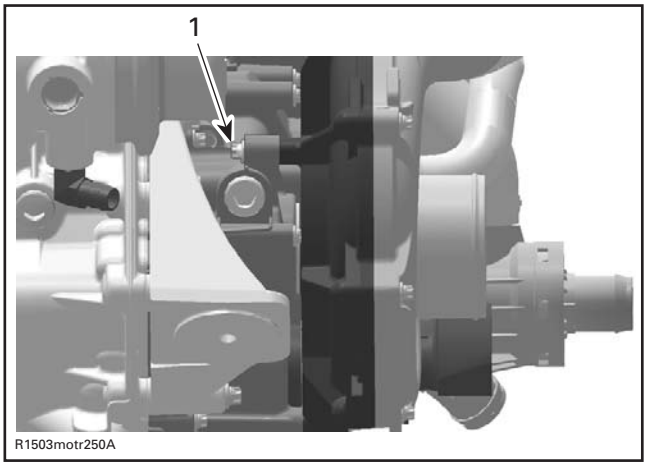

1. *Upper retaining screw*

Disassembling the Supercharger

NOTICE **Be scrupulous when working on supercharger parts. Supercharger rotation reaches 45 000 RPM. Any modification, improper repair, assembly or damage on the parts, may result in damage of the supercharger. Strictly follow the described procedures.**

1. Secure the supercharger on its support plate.

REQUIRED TOOL
SUPPORT PLATE (P/N 529 035 947)

2. Take apart supercharger housing.

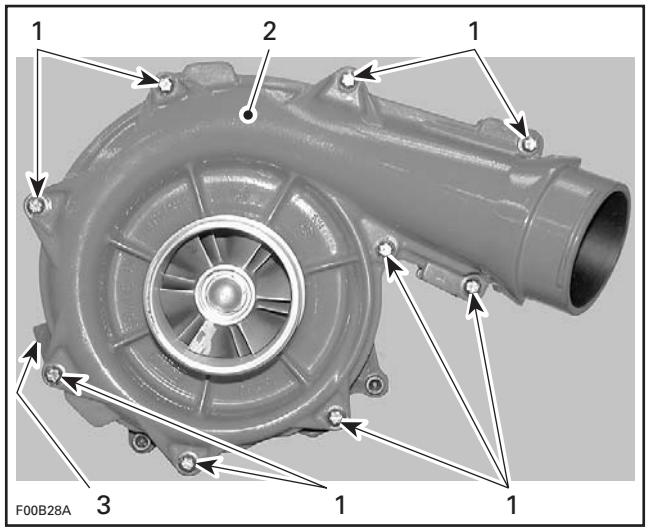

1. Retaining screws
2. Housing half (intake side)
3. Housing half (engine side)

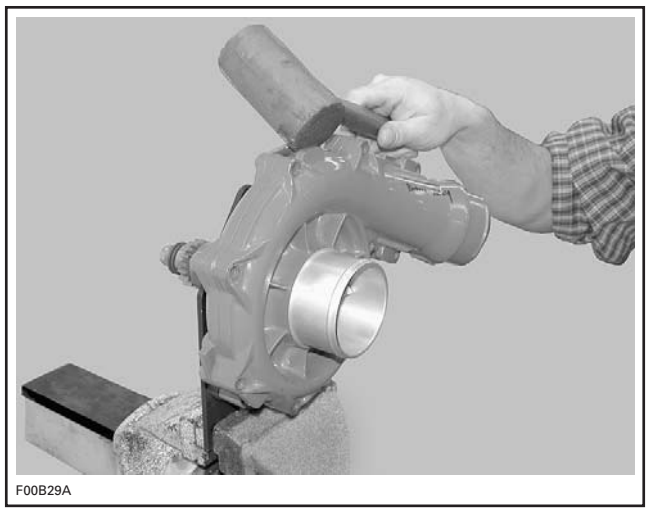

PLASTIC HAMMER

3. Loosen cap nut (turn **clockwise**) on supercharger shaft turbine side.

REQUIRED TOOL
SUPERCHARGER RETAINING KEY (P/N 529 036 027)

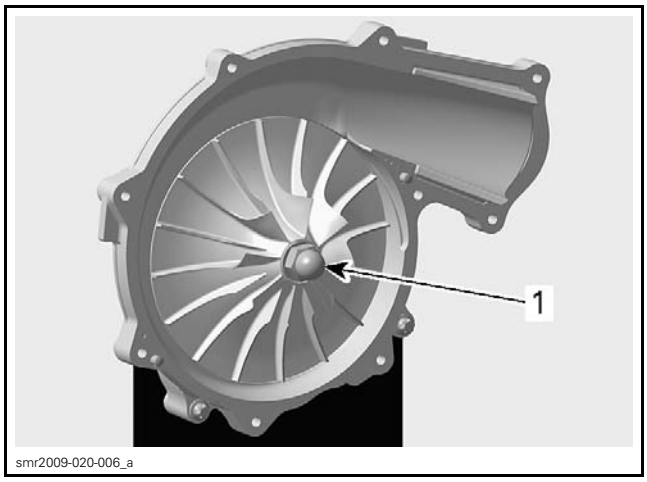

1. Cap nut (left-hand thread)

4. Remove washer, turbine, O-ring and step collar from supercharger shaft.

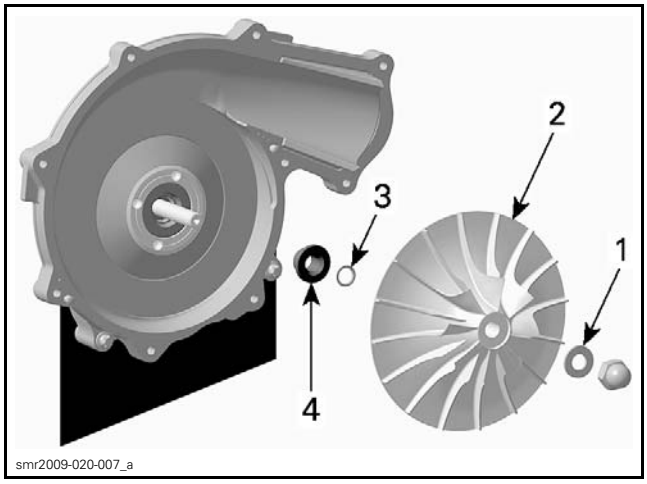

1. Washer
2. Turbine
3. O-ring
4. Step collar

5. Loosen nut on supercharger shaft engine side (turn **counterclockwise**).

REQUIRED TOOL
SUPERCHARGER RETAINING KEY (P/N 529 036 027)

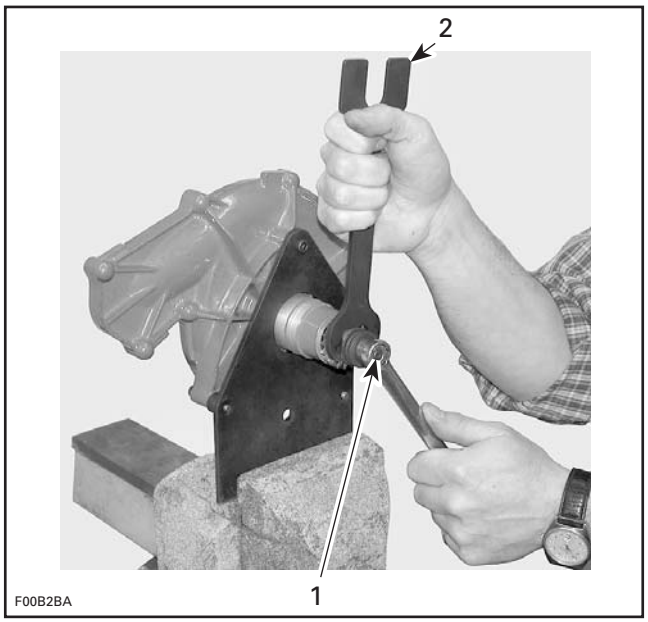

1. *Nut*
2. *Retaining key*

6. Remove L-ring, spring washers, lock washer, drive gear and needle pins by turning the supercharger upside down. Discard all needle pins.

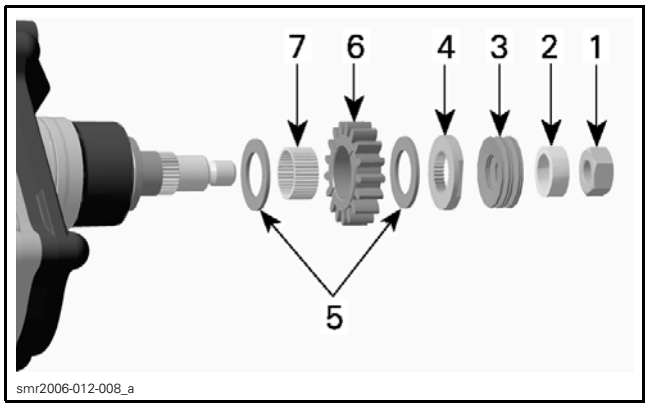

1. *Nut*
2. *L-ring*
3. *Spring washers (5x)*
4. *Lock washer*
5. *Friction shims*
6. *Drive gear*
7. *Needle pins (discard all)*

7. Carefully push out supercharger shaft towards engine side by using a press.

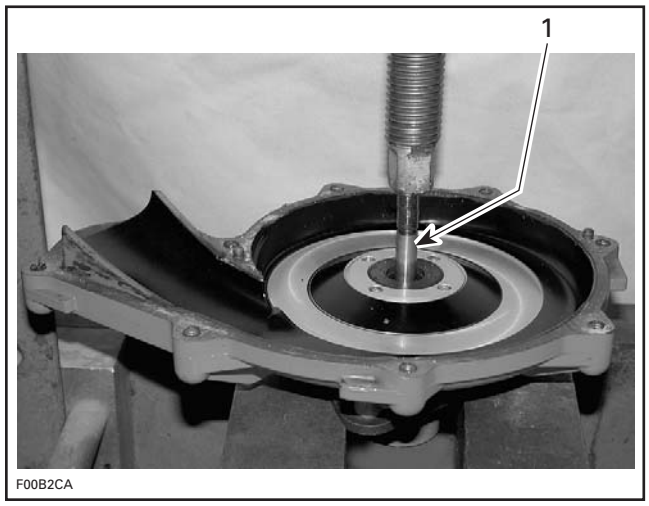

1. *Supercharger shaft*

8. Press out ball bearing from supercharger shaft by using a press.

REQUIRED TOOL	
SUPERCHARGER RETAINING KEY (P/N 529 036 027)	

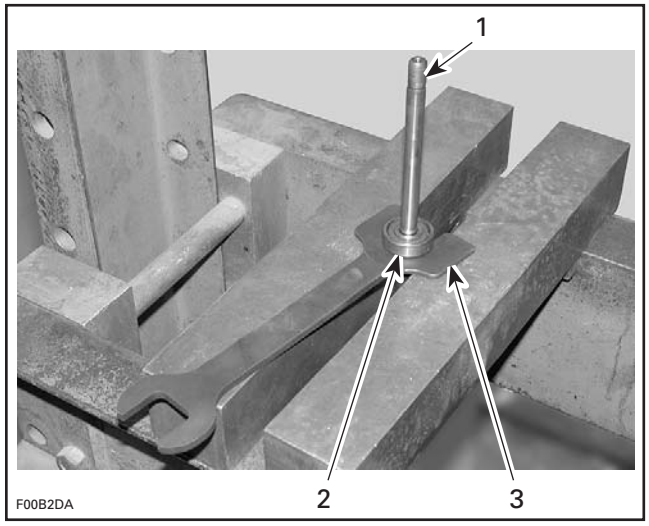

1. *Supercharger shaft*
2. *Ball bearing*
3. *Retaining key*

9. Remove retaining disc with seal from housing half (engine side).

REQUIRED TOOL	
4-PIN SOCKET (P/N 529 035 948)	

NOTE: It may be necessary to heat the housing with a heat gun to release the retaining disc.

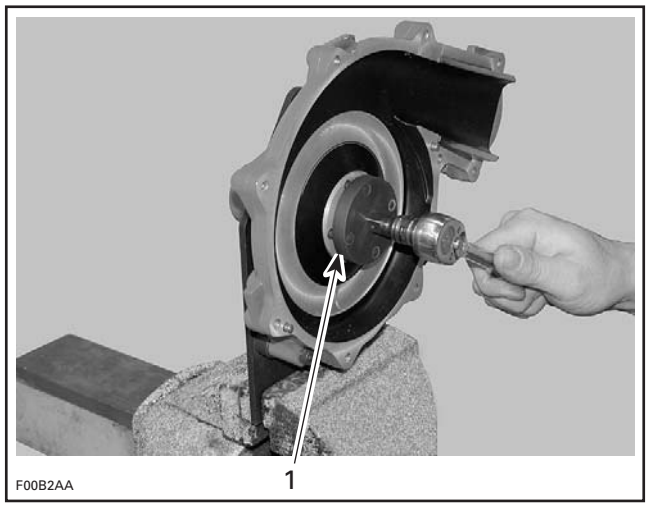

1. 4-pin socket

10. Discard the oil seal.
11. Remove and discard ball bearing from supercharger housing half (engine side) by using a press and a suitable bearing pusher.

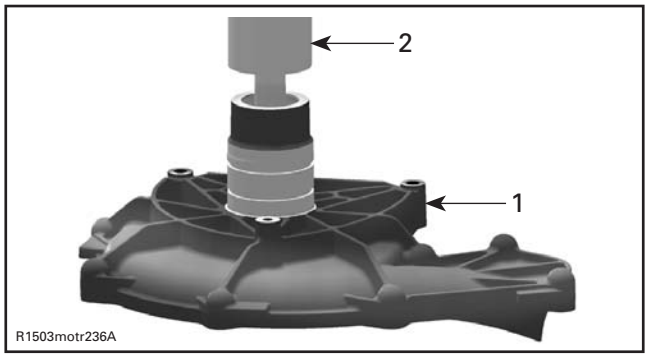

1. Supercharger housing half (engine side)
2. Bearing pusher

Inspecting the Supercharger

Supercharger Clutch Components and Gear

Check the wear limit on drive gear, lock washer and driven plate on supercharger shaft. Check drive gear for cracks.

NOTE: If parts are worn out or damaged, repair supercharger only by using supercharger repair kit.

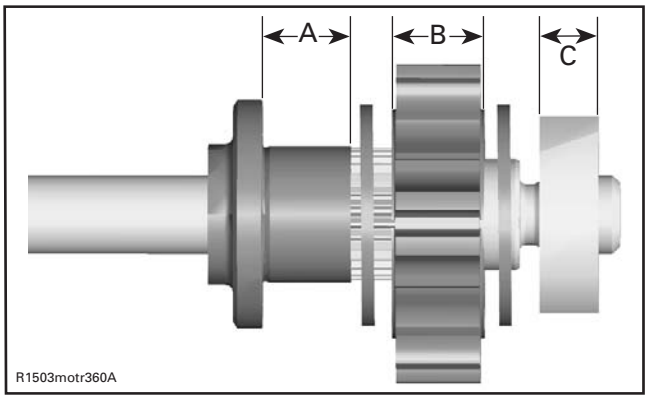

A. Driven plate journal depth
B. Drive gear thickness
C. Lock washer thickness

DRIVEN PLATE JOURNAL DEPTH	
NEW	14.460 mm to 14.500 mm (.5693 in to .5709 in)
SERVICE LIMIT	14.600 mm (.5748 in)

DRIVE GEAR THICKNESS	
NEW	11.000 mm to 11.050 mm (.4331 in to .435 in)
SERVICE LIMIT	10.900 mm (.4291 in)

LOCK WASHER THICKNESS	
NEW	4.050 mm to 4.150 mm (.1594 in to .1634 in)
SERVICE LIMIT	3.950 mm (.1555 in)

Spring Washer

Put spring washer package together as it is assembled on the supercharger shaft. Measure the height of the unloaded spring washer package.

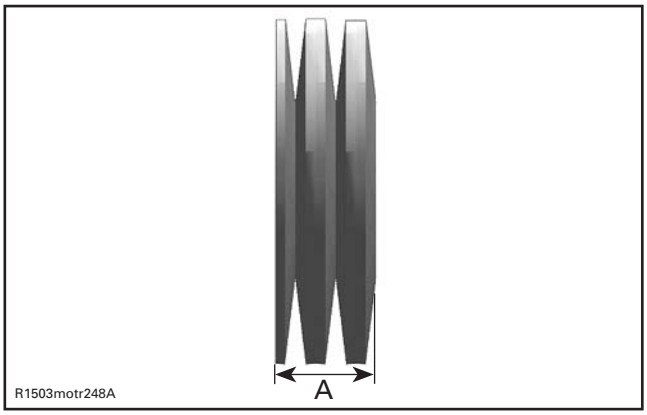

A. Spring washer package height

SPRING WASHER PACKAGE HEIGHT	
NEW	10.7 mm to 10.9 mm (.4213 in to .4291 in)
SERVICE LIMIT	10.2 mm (.4016 in)

Assembling the Supercharger

NOTICE Every time when supercharger shaft has been removed, both ball bearings have to be replaced.

NOTICE Both ball bearings have to be installed with cages facing turbine side.

1. Install ball bearing on supercharger shaft. Hold bearing using the following tool.
   1.1 Apply enough engine oil on NEW ball bearing.
   1.2 Press the bearing. Use the following tool to hold the bearing.

REQUIRED TOOL	
SUPPORT PLATE (P/N 529 035 947)	

NOTICE Ensure to position ball bearing against protrusion of support plate for the installation. This way, the installation pressure will be applied to the inner race and will not be transmitted to the bearing balls which would otherwise shorten the bearing life.

NOTICE To install ball bearings and supercharger shaft always use a press, never use any beating force like a hammer.

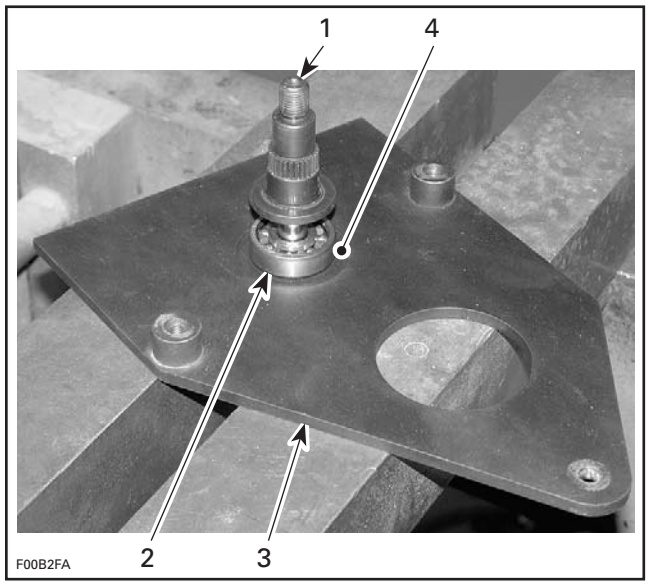

1. Supercharger shaft
2. Ball bearing
3. Bearing support plate
4. Protrusion of support plate on this side (underneath inner race)

2. Press in the ball bearing in supercharger housing half (engine side).
   2.1 Apply enough engine oil on NEW ball bearing.
   2.2 Press the bearing using the following tool.

REQUIRED TOOL	
BEARING SUPPORT/PUSHER (P/N 529 035 950)	

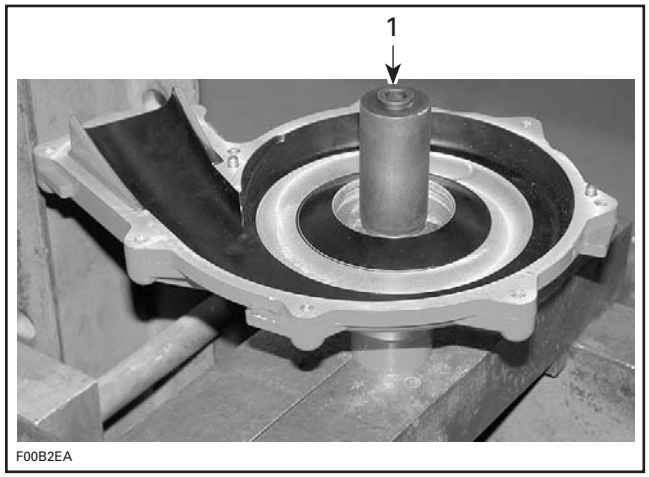

1. Bearing support/pusher

3. Secure the supercharger housing plate (engine side) in a vice.

REQUIRED TOOL	
SUPPORT PLATE (P/N 529 035 947)	

4. Apply LOCTITE 243 (BLUE) (P/N 293 800 060) on retaining disc. If a new retaining disc is used, the threads are coated with a self-locking product.
5. Install the retaining disc in supercharger housing half.

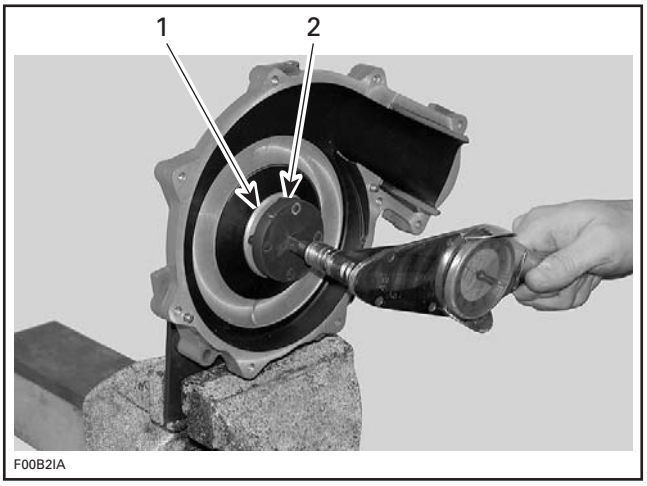

1. Retaining disc
2. 4-pin socket

REQUIRED TOOL	
4-PIN SOCKET (P/N 529 035 948)	

TIGHTENING TORQUE	
Retaining disc	40 N•m (30 lbf•ft)

6. Press supercharger shaft in housing half (engine side).
   6.1 Properly support bearing using the following tools under supercharger housing half.

REQUIRED TOOLS	
SUPPORT PLATE (P/N 529 035 947)	
BEARING SUPPORT/PUSHER (P/N 529 035 950)	

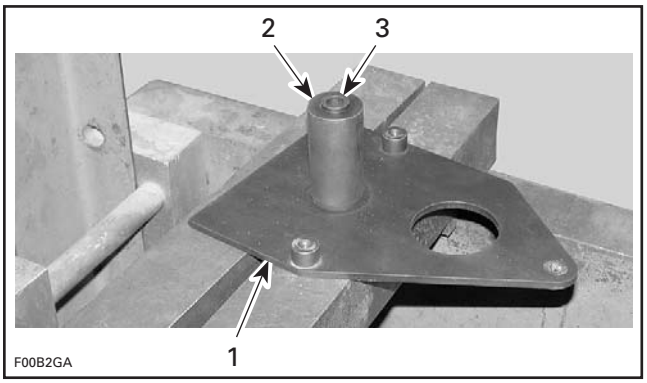

1. Support plate
2. Bearing support/pusher
3. Protrusion here

NOTICE **Before pressing in the supercharger shaft, be sure to properly support the inner race of ball bearing in supercharger housing half with the recommended tool. This way, the installation pressure will be applied to the inner race and will not be transmitted to the bearing balls which would otherwise shorten the bearing life.**

6.2 Apply heat outside of the housing with a heat gun to expand its diameter prior to inserting the shaft. Ensure there is no O-ring on the housing half prior to heating.

6.3 Apply engine oil on supercharger shaft. Press shaft with thrust washer and distance sleeve together in supercharger housing half.

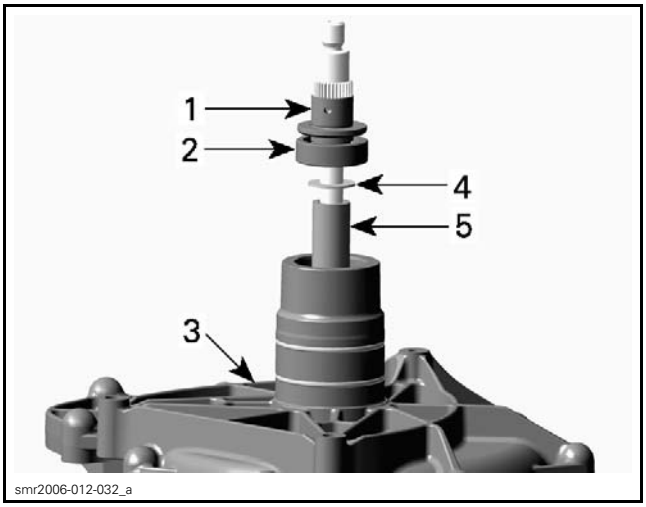

1. Compressor shaft
2. Ball bearing
3. Supercharger housing half
4. Thrust washer
5. Distance sleeve

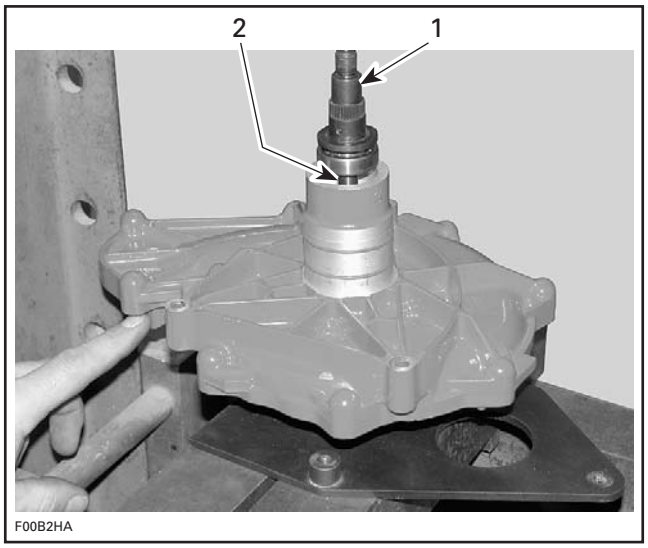

1. *Supercharger shaft*
2. *Distance sleeve*

7. Apply engine oil on seal and push into retaining disc by hand.

NOTE: Always use a NEW oil seal when assembling the supercharger.

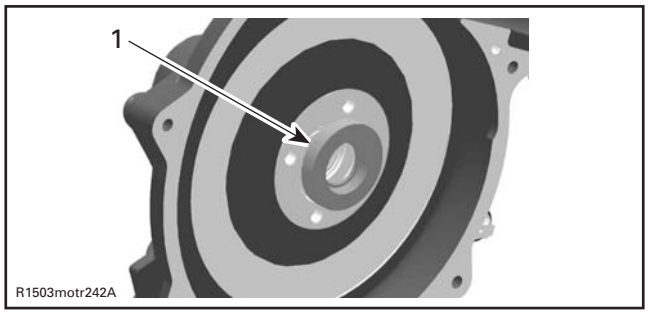

1. *Oil seal*

8. Install step collar, O-ring, turbine and washer on supercharger shaft. Apply LOCTITE 243 (BLUE) (P/N 293 800 060) on cap nut and temporary finger tight cap nut.

NOTE: The cap nut on the supercharger shaft has a left-handed thread. The Loctite has to be applied in a small dose into the nut.

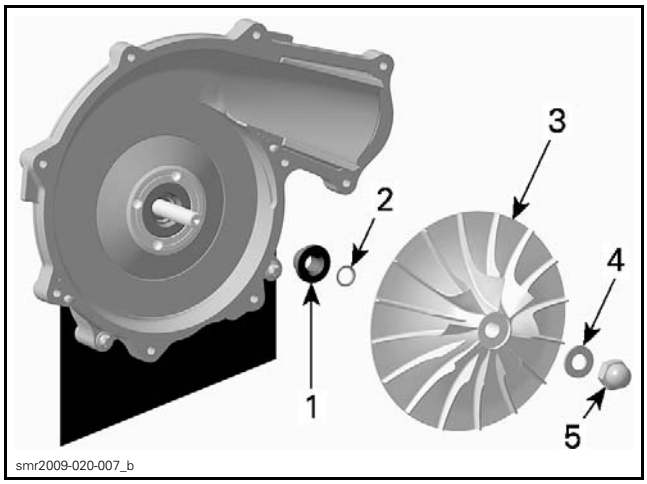

1. *Step collar*
2. *O-ring*
3. *Turbine*
4. *Washer*
5. *Cap nut*

Complete installation of supercharger shaft, engine side as follows:

NOTICE **It is of the utmost importance that all parts be absolutely clean. The compressor shaft spins at up to 45 000 RPM and any debris could cause a failure.**

9. Prepare the following parts for assembly by applying ISOFLEX GREASE TOPAS NB 52 (P/N 293 550 021) as shown in the next illustrations.

NOTICE **No other grease can be used, otherwise damage to needle bearing will occur.**

Shaft (needle bearing seat and collar)	
Drive gear (inner diameter)	
Friction shims (inner diameter and both sides)	
Lock washer (inner splines and friction shim thrust surface)	

10. Put the first friction shim on a workbench.

NOTICE **Manipulate friction shims with care, those parts are sensitive.**

11. Put the drive gear on the friction shim.
12. Install the **NEW** needle bearing in drive gear.
    12.1 Position the needle bearing on the drive gear.

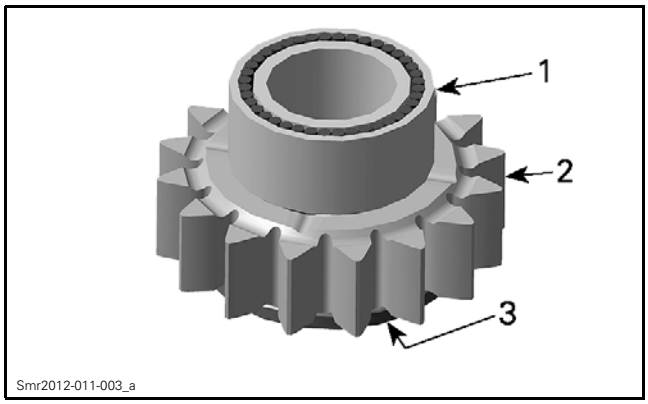

1. Needle bearing
2. Drive gear
3. Friction shim

    12.2 Push the needle pins with inner plastic cage into the drive gear.

REQUIRED TOOL
NEEDLE BEARING PUSHER (P/N 529 036 237)

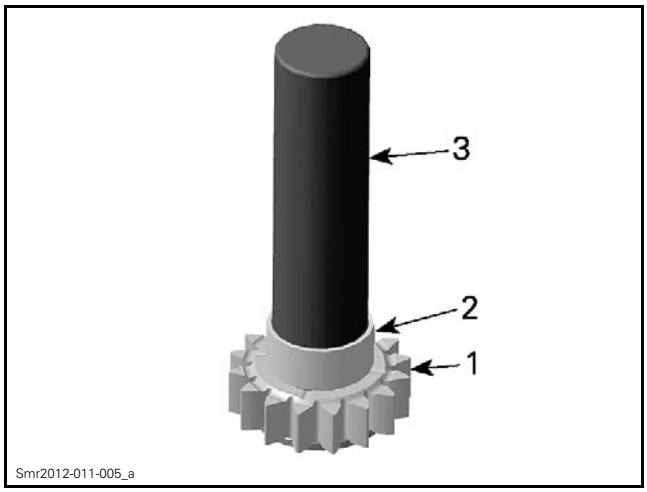

1. Drive gear
2. Outer plastic cage
3. Needle bearing pusher

    12.3 Remove needle bearing pusher and discard outer plastic cage.
    12.4 Check if all 40 needle pins are in place.

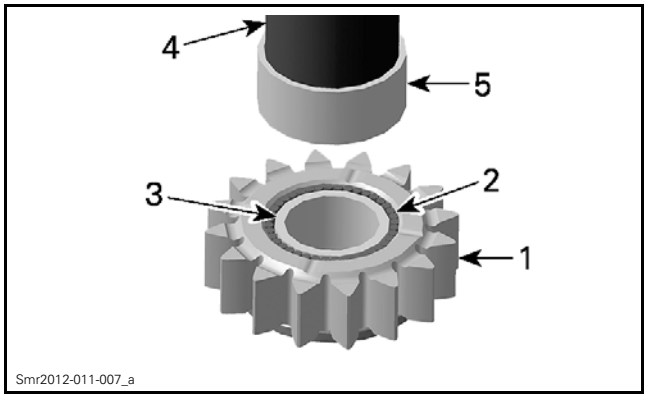

1. Drive gear
2. 40 needle pins
3. Inner plastic cage
4. Needle bearing pusher
5. Outer plastic cage

13. Place the second friction shim on the drive gear.
14. Install the package consisting of friction shim, drive gear with needle bearing and friction shim on the hub side of the compressor shaft.

NOTE: The inner plastic cage is pushed out upon installation on compressor shaft.

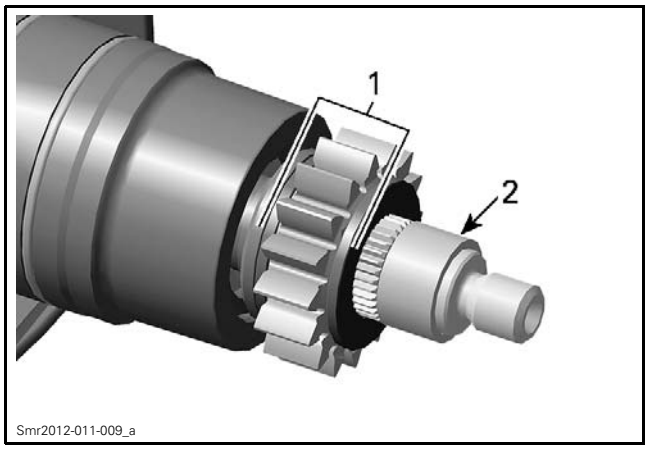

1. Package of friction shims, drive gear and needle bearing
2. Inner plastic cage

15. Discard the inner plastic cage and install the lock washer.
16. Apply engine oil to the spring washers.
17. Position the spring washers as per illustration.

NOTICE **When installing the spring washers, take care of the exact installation direction of the washers.**

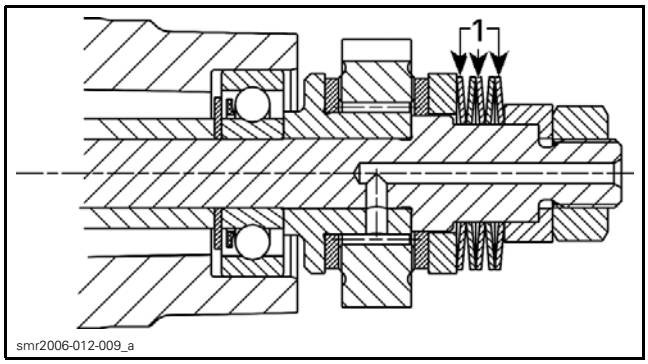

1. Spring washers

18. Install the L-ring on the compressor shaft.
19. Apply LOCTITE 243 (BLUE) (P/N 293 800 060) on the hexagonal nut threads.

TIGHTENING TORQUE	
Hexagonal nut	29 N•m (21 lbf•ft)

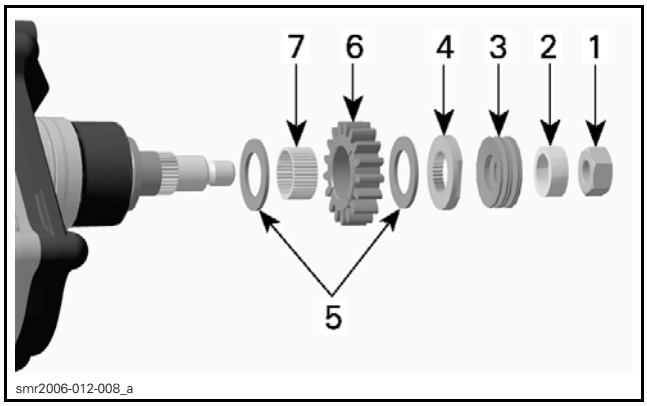

1. Nut
2. L-ring
3. Spring washers
4. Lock washer
5. Friction shims
6. Drive gear
7. Needle bearing

NOTE: The L-ring will preload the spring washers.

20. Hold the lock washer of the supercharger shaft (engine side) and tighten the cap nut.

REQUIRED TOOL	
SUPERCHARGER RETAINING KEY (P/N 529 036 027)	

TIGHTENING TORQUE	
Cap nut	29 N•m (21 lbf•ft)

21. Apply LOCTITE 5910 (P/N 293 800 081) on supercharger housing sealing surface.

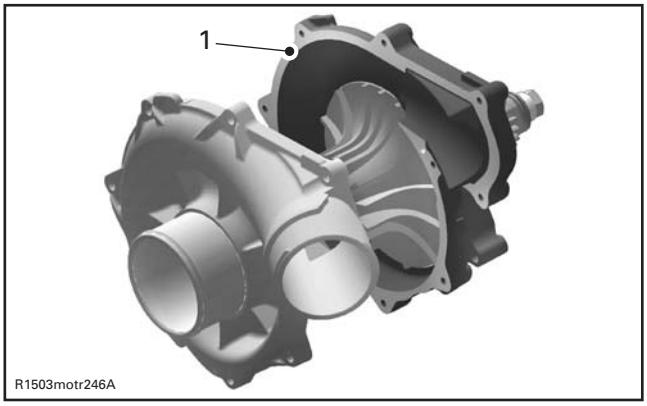

1. Apply Loctite 5910 on sealing surface

22. Assemble supercharger housing halves.
    - 22.1 Apply LOCTITE 243 (BLUE) (P/N 293 800 060) on retaining screws.
    - 22.2 Tighten supercharger housing halves screws according to the following sequence.

TIGHTENING TORQUE	
Supercharger housing halves screws	9 N•m (80 lbf•**in**)

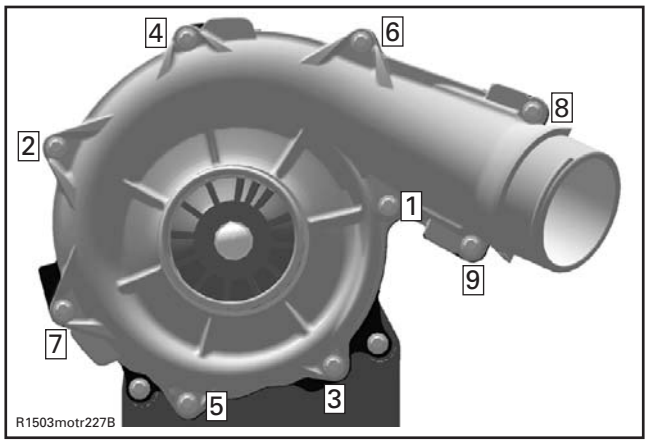

SUPERCHARGER TIGHTENING SEQUENCE

23. Verify the clutch slipping moment. Refer to *SUPERCHARGER REMOVED FROM ENGINE (BENCH TEST)* in this subsection.

Installing the Supercharger

1. Grease sealing surface between supercharger and PTO housing with SUPER LUBE GREASE (P/N 293 550 030).

NOTE: Ensure O-rings are installed.

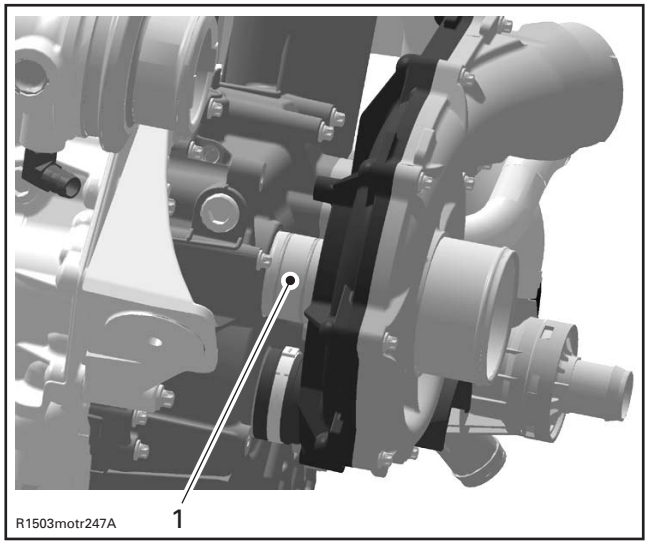

1. Super Lube grease

2. Install supercharger on PTO housing.
3. Apply LOCTITE 243 (BLUE) (P/N 293 800 060) on the retaining screws.
4. Tighten supercharger retaining screws to specifications.

TIGHTENING TORQUE	
Supercharger retaining screws	9 N•m (80 lbf•**in**)

NOTE: For the upper retaining screw the following tool must be used mounted 90° to torque wrench.

REQUIRED TOOL	
TORX ADAPTER (P/N 529 035 938)	

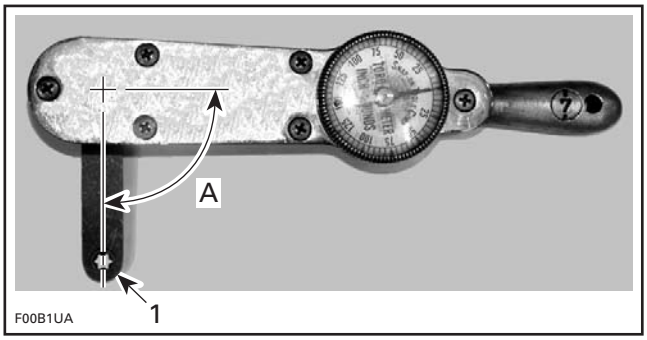

1. Torx adapter perpendicular to torque wrench
A. 90°

NOTICE **Not installing the tool as shown will change the torque applied to the screw.**

5. After complete installation of the supercharger, the slipping moment has to be rechecked. Refer to *SUPERCHARGER CLUTCH SLIPPING MOMENT (ON ENGINE)* at the beginning of this subsection.

INTERCOOLER (215 ENGINE)

SERVICE TOOLS

Description	Part Number	Page
VACUUM/PRESSURE PUMP	529 021 800	2

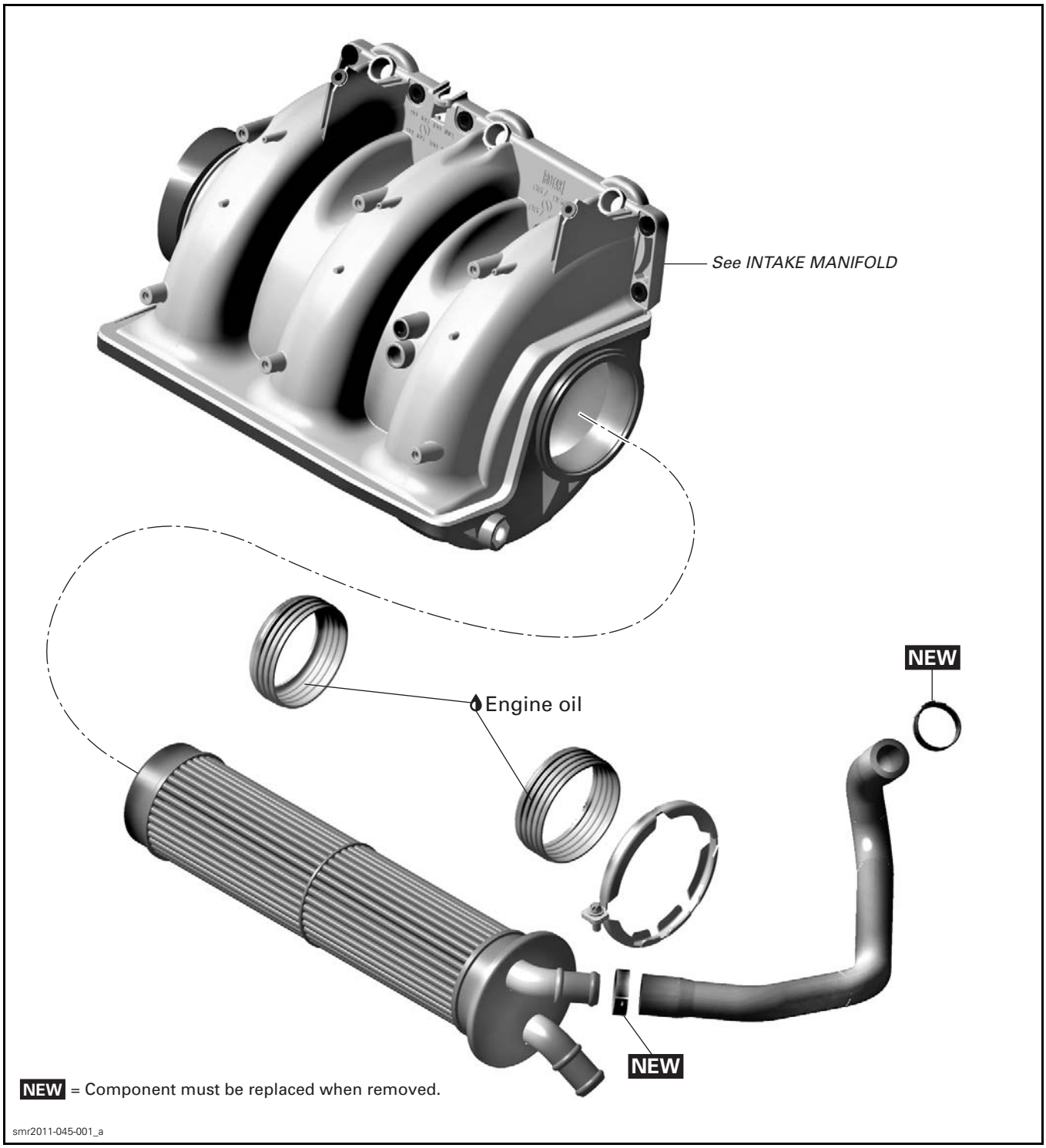

PROCEDURES

INTERCOOLER

Intercooler Leak Test

Perform intercooler leak test when engine looses performance, when there is white exhaust smoke or when temperature in exhaust system is to high.

⚠ WARNING

Let engine cool down prior to perform leak test. Direct contact with hot engine may result in skin burn.

NOTE: The inspection can be done while intercooler remains installed in intake manifold.

Remove:
- Outlet hose from exhaust manifold
- Inlet hose from intercooler.

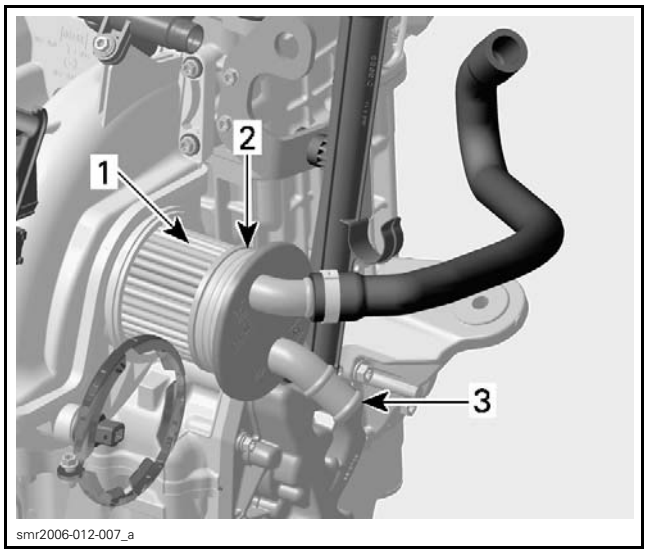

INTERCOOLER PULLED OUT FOR CLARITY PURPOSE ONLY
1. *Intercooler*
2. *Outlet hose*
3. *Inlet nipple*

Plug intercooler inlet nipple.

Install an adapter on the outlet hose to connect a pressure pump.

REQUIRED TOOL	
VACUUM/PRESSURE PUMP (P/N 529 021 800)	

Pressurize the intercooler as follows:

PRESSURE TEST
69 kPa (10 PSI) for 10 minutes minimum

If there is a pressure drop, first spray hoses and adapters with a soapy solution to ensure they are not leaking.

Otherwise, remove intercooler from manifold to spray soapy water on it. If air bubbles are present, replace the intercooler. Refer to procedures further in this subsection.

Properly reinstall removed parts.

Make sure the intercooler outlet hose is installed in the holding device (located on the oil filler tube) otherwise the hose will scuff on the engine block.

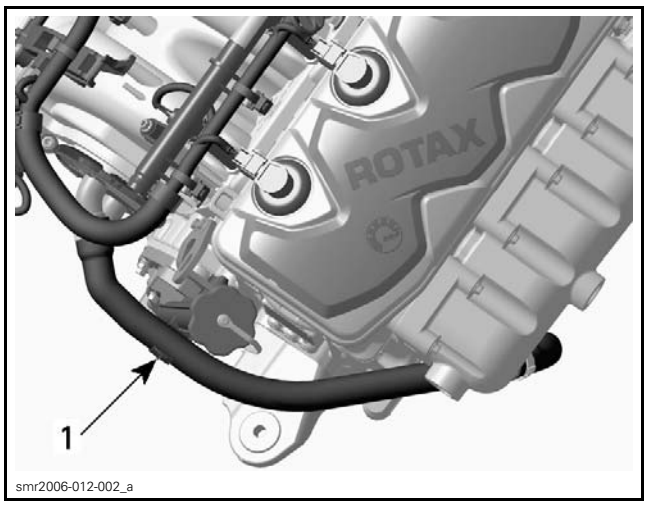

1. *Intercooler outlet hose holding device*

Removing the Intercooler

Remove intake manifold. Refer to *INTAKE MANIFOLD* subsection.

Remove collar from intercooler.

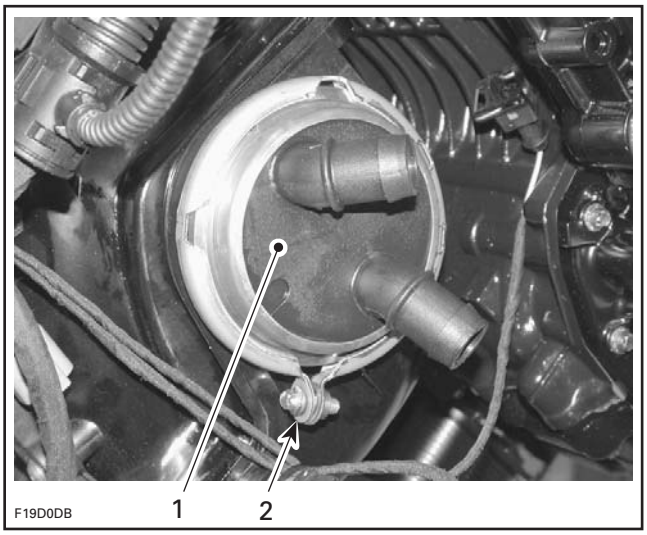

TYPICAL
1. *Intercooler*
2. *Collar*

Carefully pull intercooler out of intake manifold.

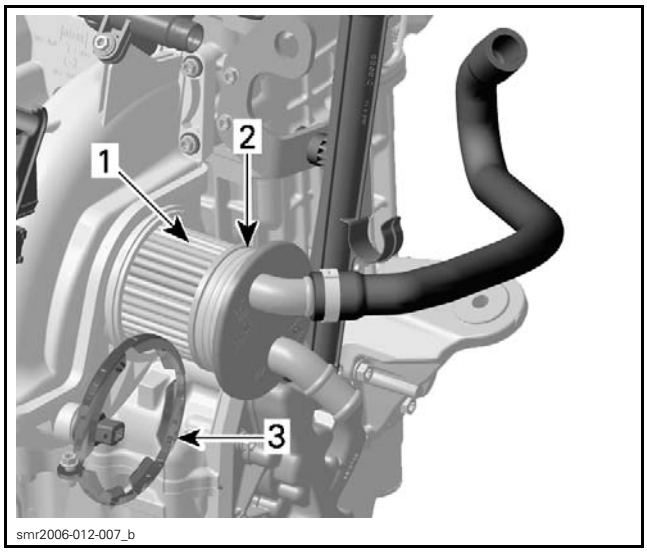

1. *Intercooler*
2. *Profile ring*
3. *Collar*

Installing the Intercooler

Installation is essentially the reverse of removal procedures. However pay particular attention to the following.

Ensure profile rings are properly installed on intercooler and apply engine oil on them to ease installation.

While properly aligning the inner end of intercooler in intake manifold, gently push intercooler until it bottoms.

Align mark on intercooler with middle rib of the intake manifold.

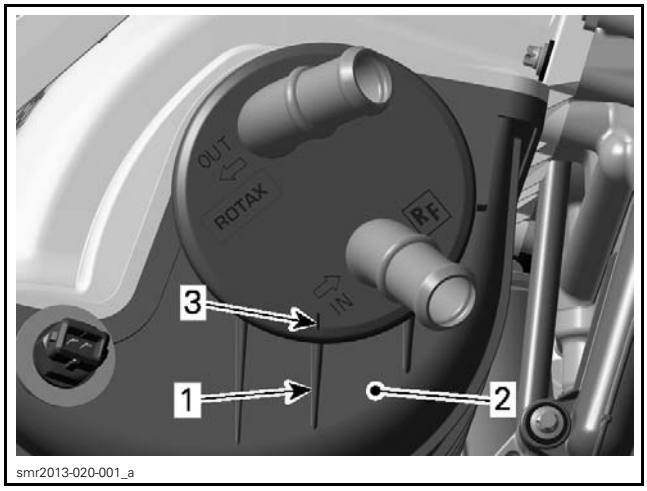

1. *Middle rib*
2. *Intake manifold*
3. *Mark on intercooler*

NOTE: If intercooler is hard to push in, a clamp can be used to press intercooler in.

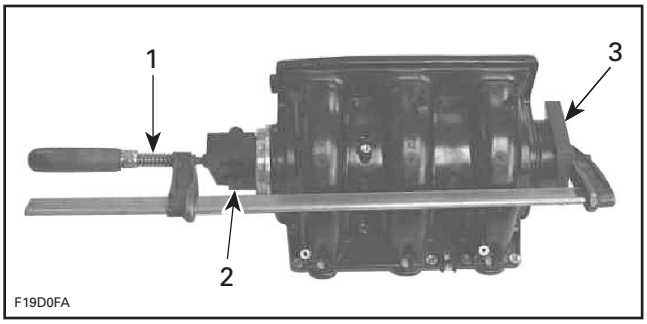

1. *Clamp*
2. *Plastic block between nipples*
3. *Plastic block*

Reinstall collar.

Align recess of collar with ribs on intake manifold.

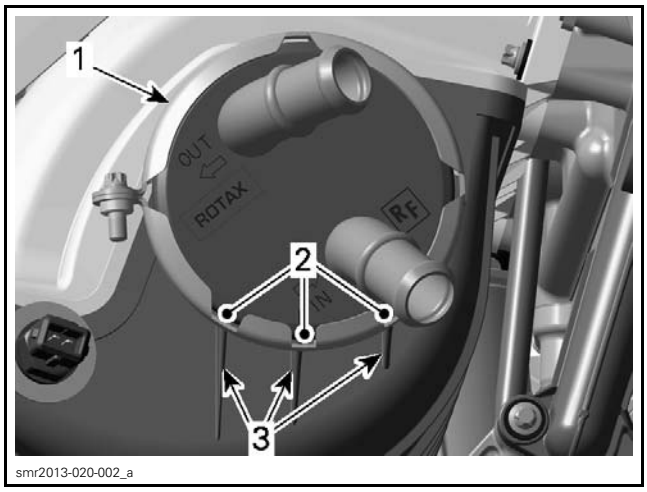

1. *Collar*
2. *Recess*
3. *Ribs*

Reinstall intake manifold.

INTERCOOLER (260 ENGINE)

SERVICE TOOLS

Description	Part Number	Page
LARGE HOSE PINCHER	529 032 500	4
VACUUM/PRESSURE PUMP	529 021 800	4

SERVICE PRODUCTS

Description	Part Number	Page
CLEAR SILICONE SEALANT	296 000 309	6

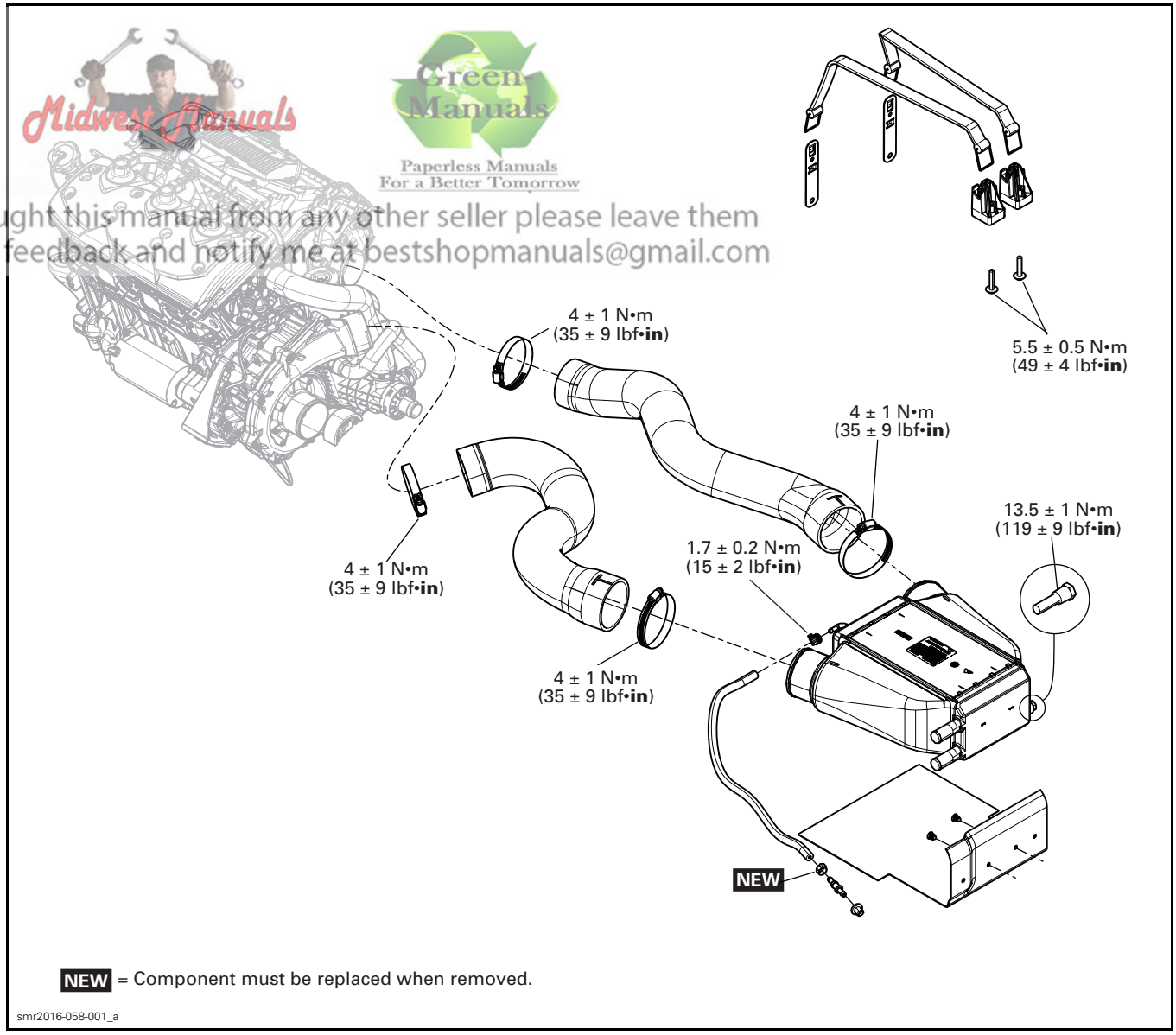

Midwest Manuals
Green Manuals
Paperless Manuals
For a Better Tomorrow
If you bought this manual from any other seller please leave them
NEGATIVE feedback and notify me at bestshopmanuals@gmail.com

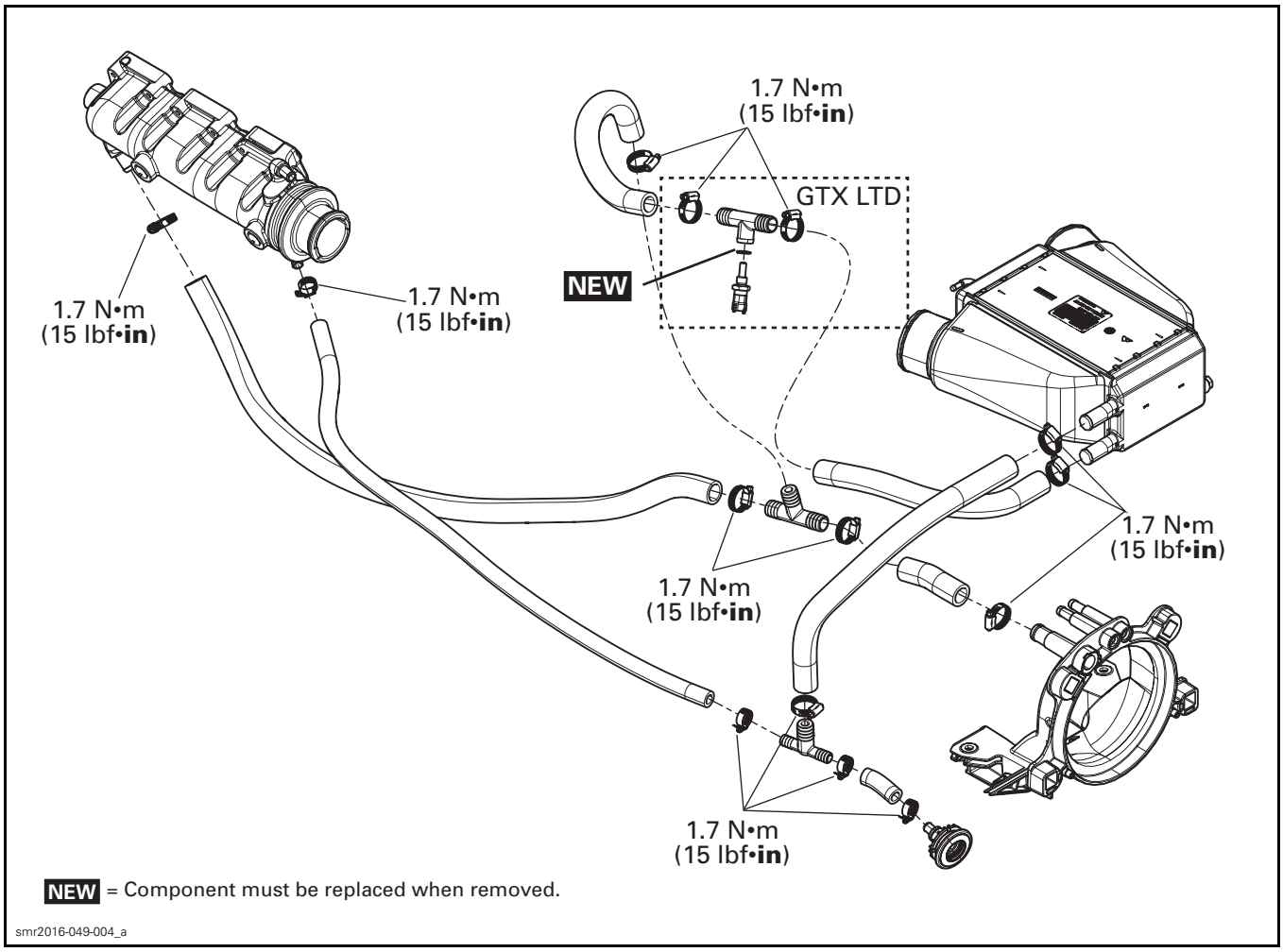
1.7 N•m
(15 lbf•in)
GTX LTD
NEW
1.7 N•m
(15 lbf•in)
1.7 N•m
(15 lbf•in)
1.7 N•m
(15 lbf•in)
1.7 N•m
(15 lbf•in)
1.7 N•m
(15 lbf•in)
NEW = Component must be replaced when removed.
smr2016-049-004_a

MAINTENANCE

FLUSHING THE INTERCOOLER

Flushing the intercooler with fresh water is essential to neutralize corroding effects of salt or other chemical products present in water. It will help to clean up sand, salt, shells or other particles in intercooler.

NOTE: Intercooler is flushed with the exhaust system, as they are on the same circuit.

Exhaust system and intercooler should be flushed each time:

– Watercraft is used in salt water and is not expected to be used further the same day.
– Watercraft is used in foul water.
– Watercraft is stored for any extended time.

Refer to *EXHAUST SYSTEM* subsection for flushing procedure.

NOTICE **Failure to flush the system, when necessary, will severely damage engine intercooler and/or exhaust system.**

PROCEDURES

SACRIFICIAL ANODE

Inspecting the Sacrificial Anode

Check for wear. If worn more than half, replace anode.

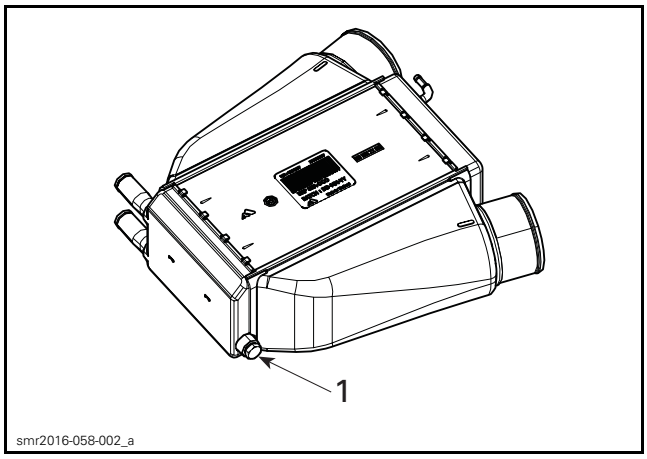

1. Sacrificial anode location

Removing the Sacrificial Anode

Unscrew and discard anode.

Installing the Sacrificial Anode

The installation is the reverse of the removal procedure.

TIGHTENING TORQUE	
Sacrificial anode screw	13.5 N•m ± 1 N•m (119 lbf•**in** ± 9 lbf•**in**)

INTERCOOLER

⚠ WARNING

Let engine cool down prior to work on or near intercooler.

Cleaning the Intercooler

If temperature in intake manifold is too high or if engine is down in performance, intercooler may require to be cleaned.

The exhaust system should be flushed first, as it may unclogged the intercooler. If not, then proceed with the intercooler cleaning procedure as detailed here.

NOTE: The exhaust temperature will decrease when the intercooler is clogged because more water is rerouted through the exhaust system.

To clean the intercooler, do the following:

NOTICE **Never try to clean the intercooler with chemical products. Only use fresh water. Chemical products will permanently damage the internal parts of intercooler.**

1. Remove the intercooler from the watercraft. See procedure further in this subsection.
2. Pour fresh water into the water outlet fitting.

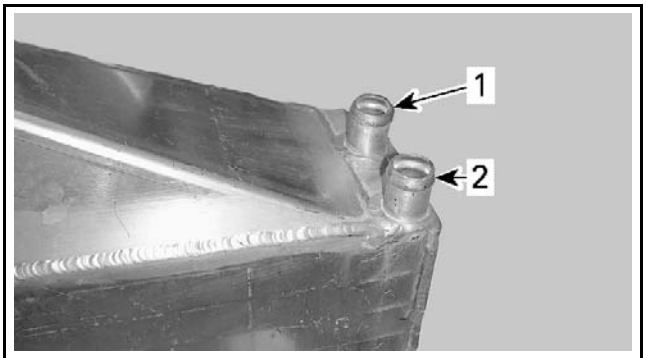

1. Intercooler water outlet fitting
2. Intercooler water inlet fitting

3. Let water soak in intercooler for a couple of hours. Occasionally, shake the intercooler to soak off deposits.
4. Rinse the intercooler using a garden hose installed on water outlet.
5. Let water flow out of intercooler a few minutes to evacuate internal deposits.

6. Check water flow.

WATER FLOW	
LOW OR ERRATIC	1. Repeat cleaning procedure.
	2. Replace the intercooler.
HIGH AND REGULAR	Intercooler is not clogged.

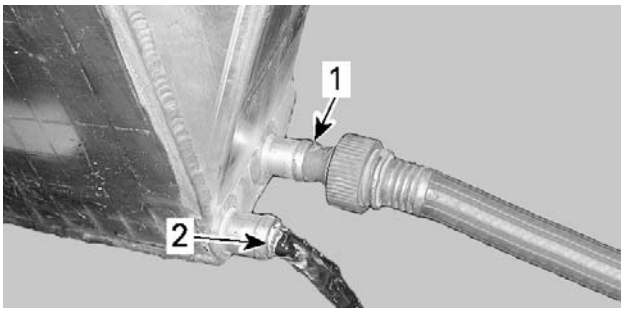

smr2009-019-009_a

1. Garden hose installed on water outlet
2. High and regular water flow

7. Perform a leak test before installing the intercooler in the watercraft.

Intercooler Leak Test

Block intercooler water outlet hose and vent hose.

REQUIRED TOOL	
LARGE HOSE PINCHER (P/N 529 032 500)	

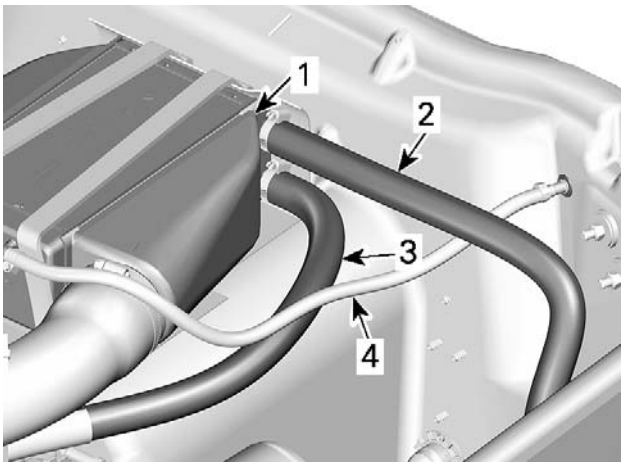

smr2016-058-003_a

MANY PARTS REMOVED FOR CLARITY PURPOSE
1. Intercooler
2. Intercooler water outlet hose
3. Intercooler water inlet hose
4. Vent hose

Unplug the intercooler water inlet hose from the intercooler.

Install the VACUUM/PRESSURE PUMP (P/N 529 021 800) on intercooler water inlet fitting.

529021800

VACUUM/PRESSURE PUMP

Pressurize the intercooler.

PRESSURE TEST
69 kPa (10 PSI) for 10 minutes minimum

If there is a pressure drop, first spray tool, hoses and adapters with a soapy water solution to ensure they are not leaking. If they are not leaking, replace the intercooler.

Intercooler Access

Models with Suspension

Open the boarding platform and remove both storage baskets.

Models Without Suspension

Open the seat and remove the seat bridge.

To make room, detach exhaust hose from muffler.

Removing the Intercooler

Disconnect the following parts:
1. Intercooler water outlet hose
2. Intercooler water inlet hose
3. Intercooler air inlet hose
4. Intercooler air outlet hose
5. Vent hose
6. Intercooler straps.

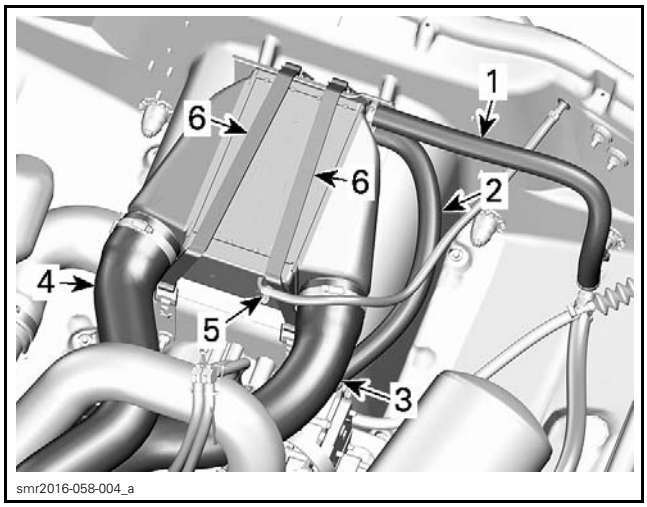

Pull intercooler out of vehicle.

Installing the Intercooler

The installation is the reverse of the removal procedure.

NOTE: Ensure hoses are routed correctly and locking ties are positioned at proper locations.

INTERCOOLER ATTACHMENTS

Replacing the Front Attachment

iS Models

Remove the *INTERCOOLER*, see procedure in this subsection.

Detach iS module from its support and move the module aside to make room.

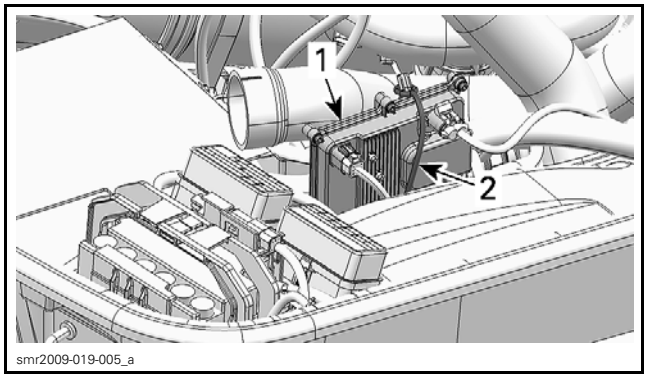

FIXED DECK REMOVED FOR CLARITY PURPOSE
1. *iS module*
2. *Retaining latch*

Cut locking ties securing wiring harnesses to iS module support and front attachment.

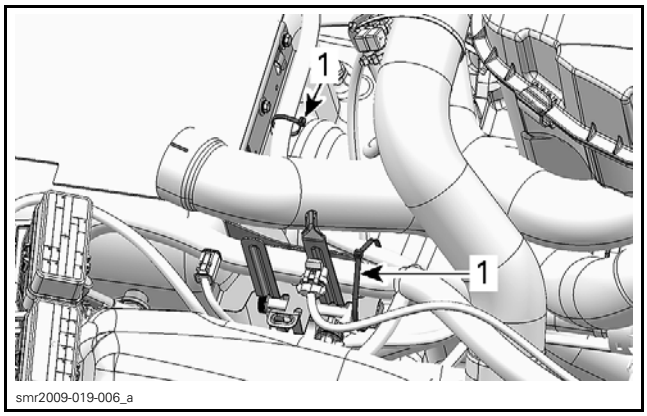

1. *Cut these locking ties*

Unscrew upper nuts of jet pump support and drill both rivets retaining the end of the attachments.

NOTICE **Drill slowly to avoid damaging the hull.**

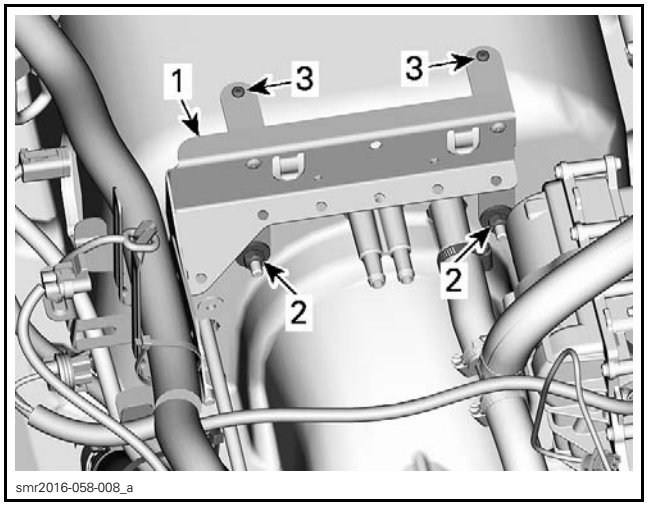

1. *iS nodule support*
2. *Upper nuts of the jet pump support*
3. *Rivets (to be drilled)*

Detach the front attachments from the is module support.

When reinstalling parts, refer to appropriate *HULL* subsection to have the proper torque of nuts.

All Other Models

Remove the *INTERCOOLER*, see procedure in this subsection.

Unscrew upper nuts of jet pump support.

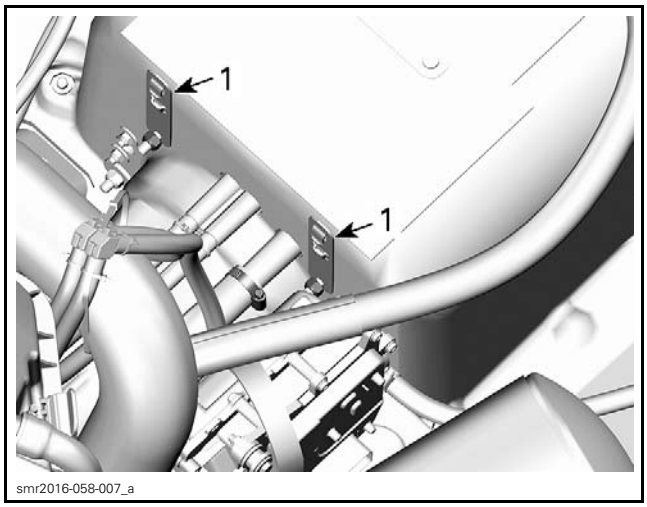

When reinstalling parts, refer to appropriate *HULL* subsection to have the proper torque of nuts.

Replacing the Rear Attachment

Remove the intercooler, see procedure in this subsection.

Remove darts and rubber pad.

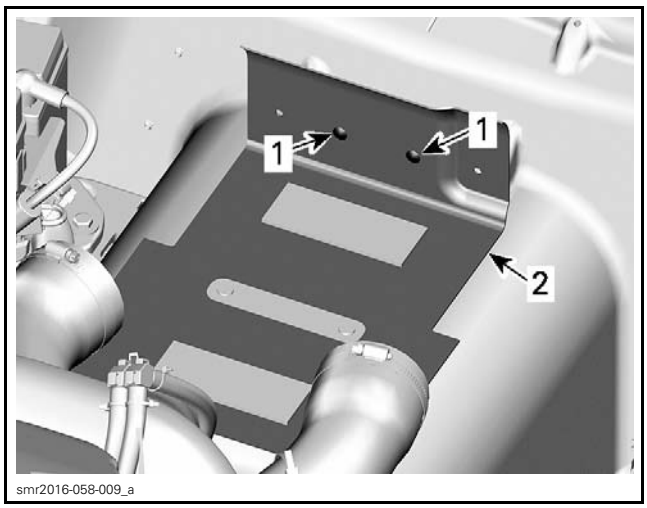

1. *Dart*
2. *Rubber pad*

Use the iBR OVERRIDE function as required to access fasteners.

NOTICE **Do not try to manually force the iBR gate when all components are installed.**

Remove the iBR gate protector.

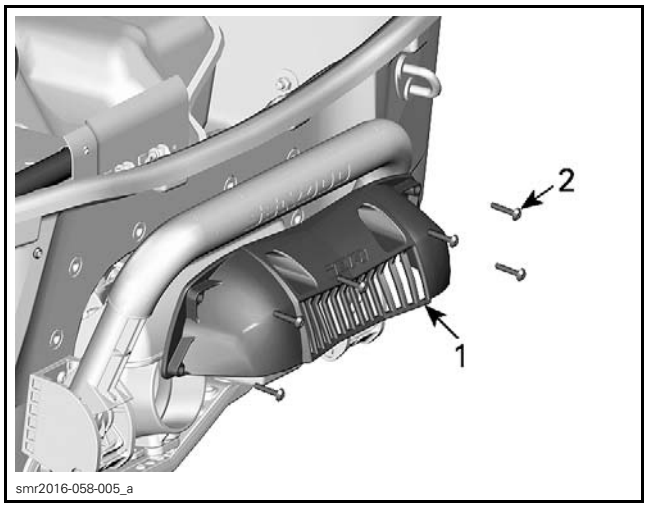

1. *iBR gate protector*
2. *Retaining screws (6x)*

Remove screw securing the rear attachments.

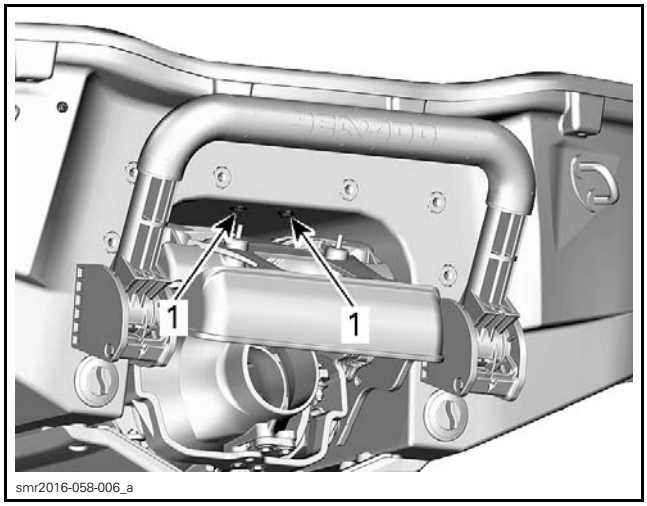

1. *Retaining screw*

Put CLEAR SILICONE SEALANT (P/N 296 000 309) into screw hole of the rear attachment.

Install a new attachment using previously removed screw.

Tighten rear attachment screw to specification.

TIGHTENING TORQUE	
Rear attachment screw	5.5 N•m (49 lbf•**in**)

Install all other removed parts.

ENGINE MANAGEMENT SYSTEM

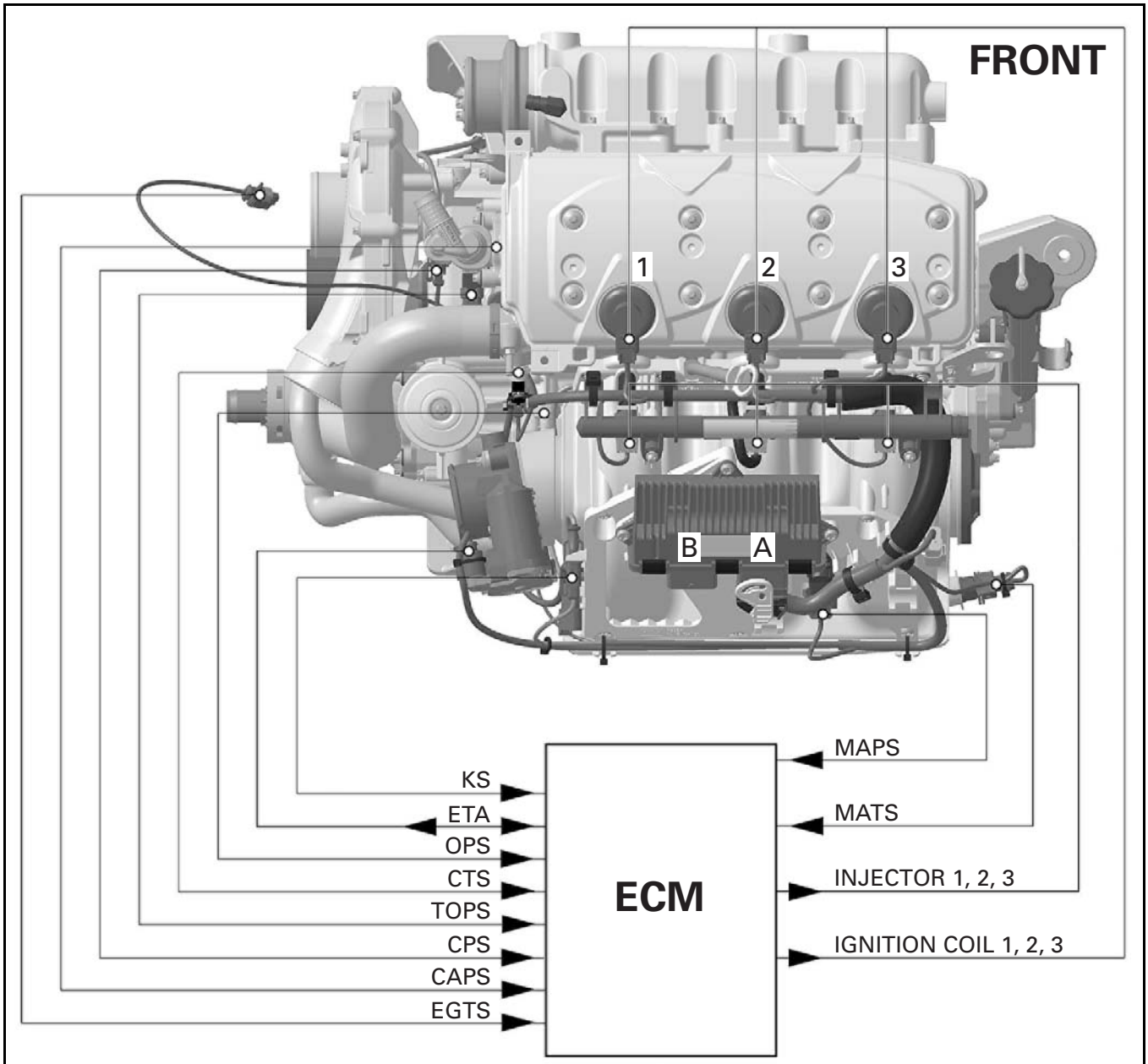

A	Engine Wiring Harness Connector
B	Vehicule Wiring Harness Connector
CAPS	Camshaft Position Sensor
CPS	Crankshaft Position Sensor
CTS	Coolant Temperature Sensor
ECM	Engine Control Module
EGTS	Exhaust Gas Temperature Sensor

KS	Knock Sensor
OPS	Oil Pressure Sensor
MAPS	Manifold Absolute Pressure Sensor
MATS	Manifold Air Temperature Sensor
ETA	Electric Throttle Actuator
TLS	Throttle Lever Sensor
TOPS	Tip-Over Protection System

IN → ECM

OUT ← ECM

smr2009-027-002_en

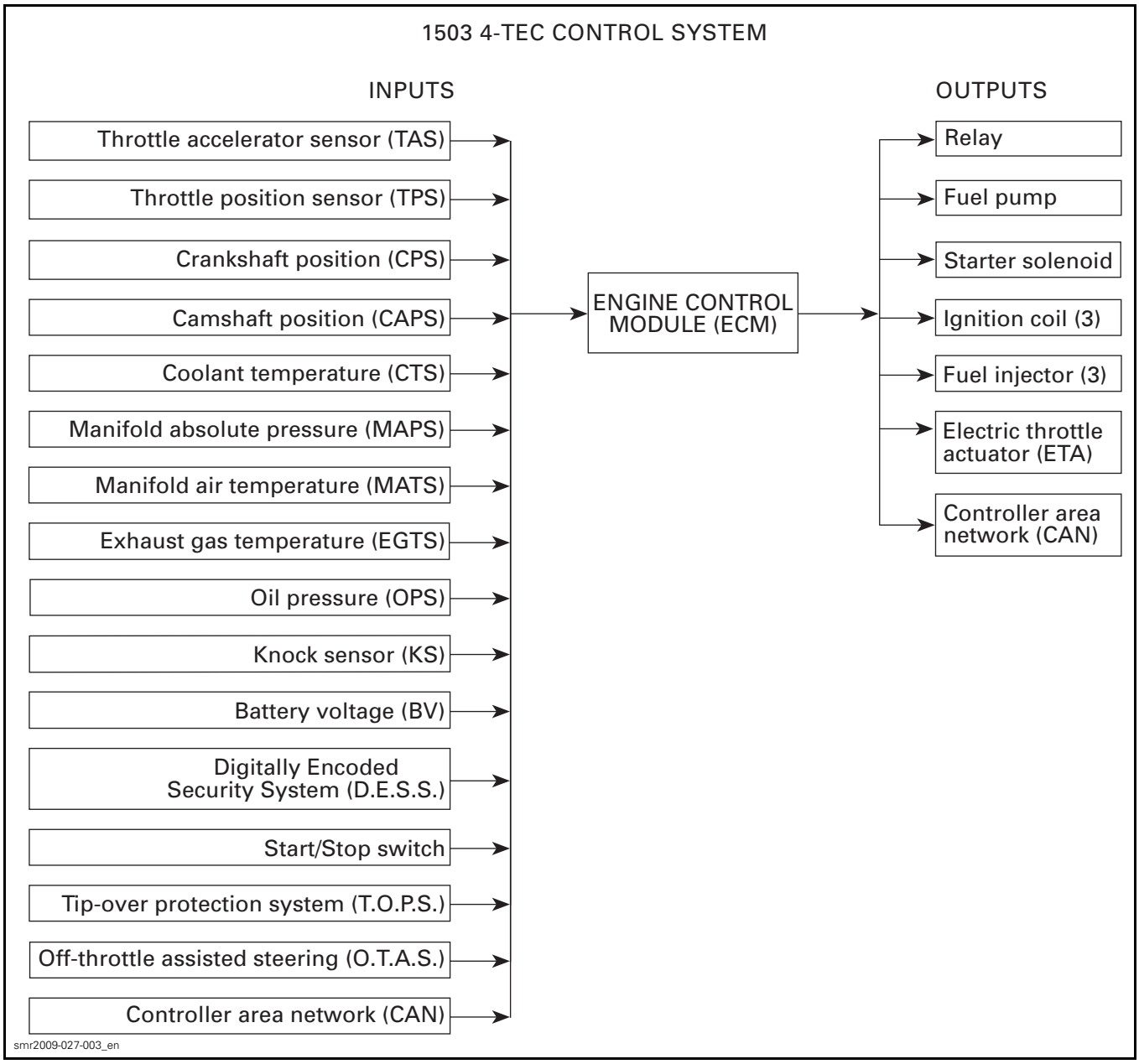
1503 4-TEC CONTROL SYSTEM
INPUTS
OUTPUTS
Throttle accelerator sensor (TAS)
Throttle position sensor (TPS)
Crankshaft position (CPS)
Camshaft position (CAPS)
Coolant temperature (CTS)
Manifold absolute pressure (MAPS)
Manifold air temperature (MATS)
Exhaust gas temperature (EGTS)
Oil pressure (OPS)
Knock sensor (KS)
Battery voltage (BV)
Digitally Encoded Security System (D.E.S.S.)
Start/Stop switch
Tip-over protection system (T.O.P.S.)
Off-throttle assisted steering (O.T.A.S.)
Controller area network (CAN)
ENGINE CONTROL MODULE (ECM)
Relay
Fuel pump
Starter solenoid
Ignition coil (3)
Fuel injector (3)
Electric throttle actuator (ETA)
Controller area network (CAN)
smr2009-027-003_en

GENERAL

SYSTEM DESCRIPTION

A highly advanced engine management system (EMS) is used to ensure a high power output with cleaner combustion.

There are 7 main systems that interact with the engine management system:

1. Electronic fuel injection
2. D.E.S.S. System
3. Ignition System
4. Starting System
5. O.T.A.S.
   (Off-Throttle Assisted Steering)
6. T.O.P.S.
   (Tip-Over Protection System)
7. iControl System

Engine Control Module (ECM)

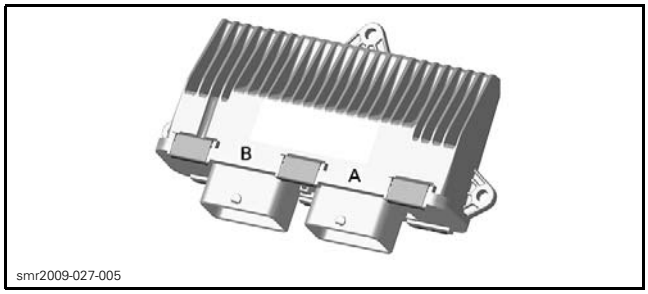

ECM

The ECM is the main component of the engine management system. It controls the electrical system and the engine management functions by processing the information obtained from various switches, controls and sensors that it compares to predetermined parameters stored in the ECM.

It also interacts with the other electronic systems through the CAN bus (information center and iControl System) for various functions that affect engine management.

The ECM is mounted on the intake manifold.

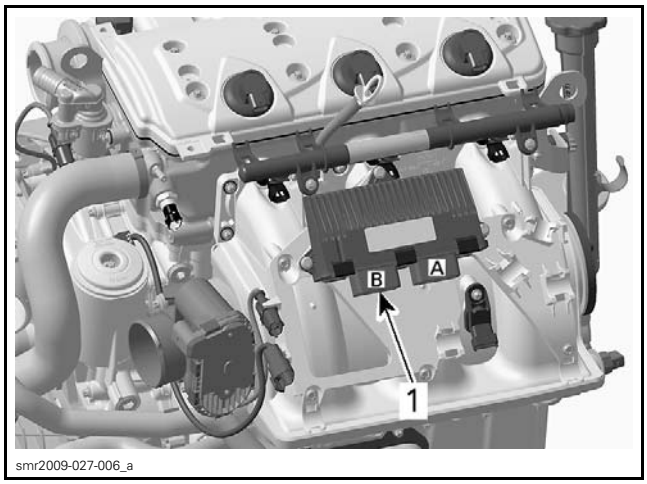

1. ECM on intake manifold

It features a permanent memory that will store fault codes, customer information and other engine information, even when the battery is removed from the vehicle.

The ECM controls the following engine management functions:

Engine RPM Limiter

The ECM limits maximum engine speed. It monitors engine RPM through the CPS and varies fuel injection, ignition and throttle plate opening as necessary.

Engine Speed Control

The ECM controls the engine idle RPM. In addition, it can vary the engine speed by commanding the electronic throttle actuator (ETA) to open or close based on throttle position and various other inputs. The ETA also allows for other functions of the iControl system.

Drowned Mode

If the engine is flooded and does not start, this special mode can be activated to prevent fuel injection and ignition while cranking in order to ventilate the engine to dry the cylinder walls.

NOTE: This mode can also be used if the engine is water-flooded.

To activate DROWNED MODE, proceed as per following steps.

1. Install the tether cord cap on the engine cut out switch.
2. While the engine is stopped, fully pull and HOLD the throttle lever.
3. Press the START/STOP button. DROWNED MODE is now on.

Releasing the throttle lever will allow the ECM to revert back to normal mode.

If the engine does not start, it may be necessary to remove the spark plugs and crank the engine with rags over the spark plug holes. Refer to *IGNITION SYSTEM* subsection.

Monitoring System

The ECM monitors:

- The electrical and electronic components of the engine system
- The iControl system
- The information center (gauge)
- Some components of the electrical system
- Signals from other electronic modules

For more information, refer to *DIAGNOSTIC AND FAULT CODES.*

Limp Home Mode

The ECM may automatically set the engine in LIMP HOME MODE using default parameters when certain major faults are detected. For more information, refer to *DIAGNOSTIC AND FAULT CODES*.

Diagnostic Mode

The ECM features a self-diagnostic mode that is initiated on system power up for certain systems and components (when pressing the START button), and when the engine is running for others. Refer to *DIAGNOSTIC AND FAULT CODES* subsection for more information.

iCONTROL SYSTEM

GENERAL

The iControl (intelligent Control) system may consist of the following systems depending on the PWC model:

– Intelligent Throttle Control (iTC)
– Intelligent Brake and Reverse (iBR)
– Intelligent Suspension (iS).

The information center (gauge) and handlebar switches are used to navigate through and select several functions, modes of operation and change certain settings and system parameters using the appropriate handlebar controls.

Each control is electronic and provides a command signal to an electronic module whose function is to assure proper operation of its system within set parameters.

For a comprehensive and complete description of the information center, refer to *INFORMATION CENTER (GAUGE)* subsection.

iTC (INTELLIGENT THROTTLE CONTROL)

The iTC is an electronic throttle control system (ETC) that includes a cable-less throttle control (TAS) located on the RH side of handlebar and an electric throttle actuator (ETA) located on the throttle body.

The iTC allows functions such as touring/sport mode, cruise control, slow speed mode, ski mode and O.T.A.S.™ as well as a more precise control of the engine power.

For a comprehensive and complete description of this system, refer to *INTELLIGENT THROTTLE CONTROL (ITC)* subsection.

iBR (INTELLIGENT BRAKE AND REVERSE)

The iBR is a brake and reverse system used to avoid obstacles, gradually slow down or stop the watercraft, or drive backwards by lowering the iBR gate that redirects the water flow at the outlet of the jet pump nozzle.

For a comprehensive and complete description of this system, refer to *IBR AND VTS* subsection.

iS (INTELLIGENT SUSPENSION)

The intelligent suspension is an electronically controlled hydro/mechanical system consisting of a hydraulic pump, an actuator, suspension arms, springs and one shock absorber. They are installed in the hull and connected to the moving deck. The suspension system is used to isolate the riders from the rough water.

CONTROLLER AREA NETWORK (CAN)

GENERAL

SYSTEM DESCRIPTION

The CAN (Controller Area Network) protocol is an ISO standard for serial data communication.

The CAN bus is the nervous system of the iControl system and the engine management system (EMS). It links the electronic modules (ECMs) together so that they communicate to interact as required.

Two wires connect each component and they are in constant communication with each other at a rate of about every 10 or 100 milliseconds depending on the component. CAN lines consist of a pair of twisted wires (WHITE/BLACK and WHITE/BEIGE).

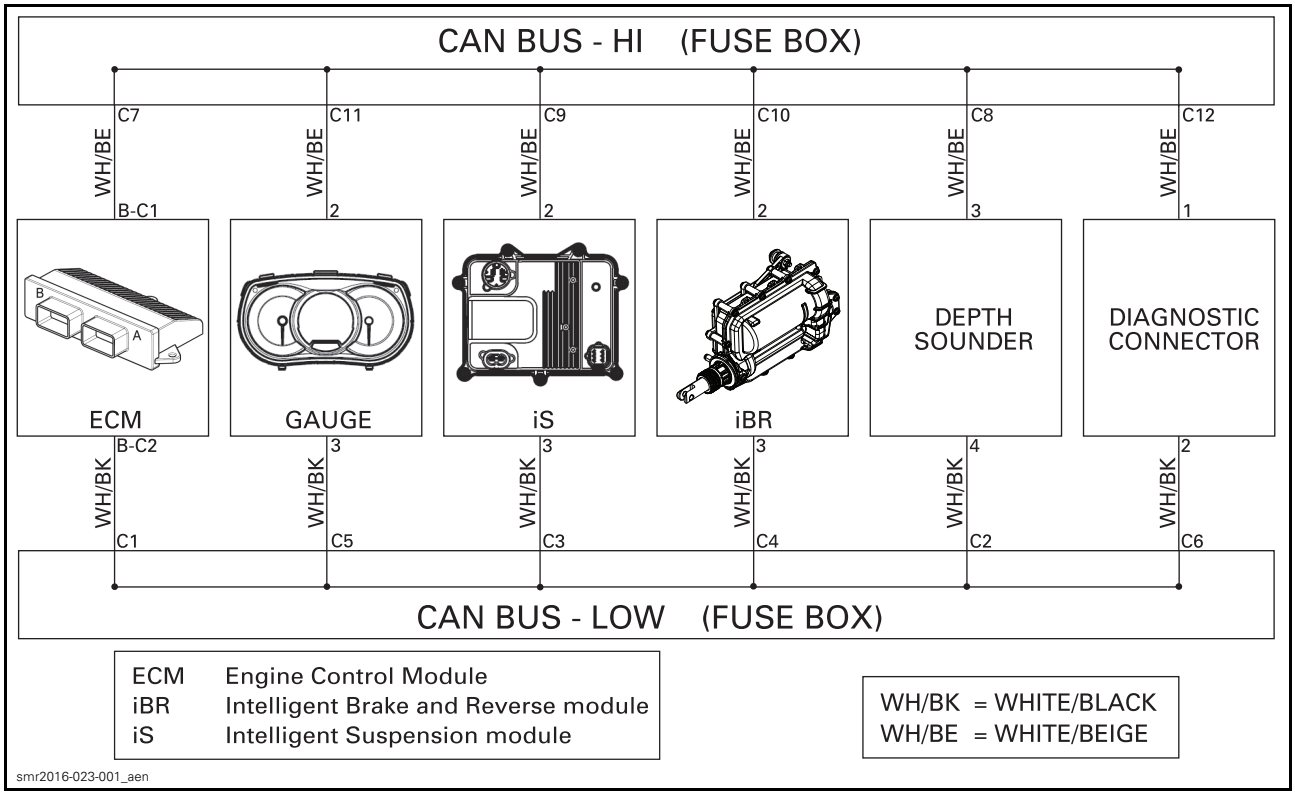

CAN BUS DIAGRAM

TROUBLESHOOTING

DIAGNOSTIC TIPS

Check the fault codes using B.U.D.S. as a first troubleshooting step. Refer to *DIAGNOSTIC AND FAULT CODES* subsection.

Make sure the modules are powered before testing CAN.

CAN Communication Problems

The following chart gives some symptoms and behaviors relative to the CAN component in cause. The list is not exhaustive, only the most significant items are given to help in troubleshooting.

CAN FAULTY WIRES (no communication)	VEHICLE BEHAVIOR OR OBSERVATION IN INFORMATION CENTER	OBSERVATION IN B.U.D.S.
Diagnostic connector not secured in its holder (holder contains a 120Ω resistor)	CAN intermittent problems. NOTE: Occurs more frequently on watercraft equipped with 2 electronic modules.	Nothing
Water in holder of diagnostic connector (particularly with salt water)	Communication problems and strange behavior of information center. Inoperative electronic systems in watercraft.	Nothing
Short circuit in CAN wires	Engine is set to limp home mode. iBR gate will not move. "Locked" in neutral. iBR light is ON. Check engine light is ON.	B.U.D.S. will not be able to communicate with any electronic module. "No vehicle detected" message will be displayed in B.U.D.S.
Information center (cluster)	Check engine light is ON. iBR light is ON. Some functions not displayed such as: Engine hours, iS, VTS and RPM.	3 modules instead of 4 will be active. "Cluster" tab and its data will not be available in B.U.D.S. ECM, iBR and iS will report a cluster CAN problem.
ECM (Engine Control Module)	Engine is set to limp home mode. Check engine light is ON. iBR light is ON. iBR gate "locked" in neutral. Some functions not displayed such as: Engine hours and RPM.	3 modules instead of 4 will be active. ECM tab and its data will not be available in B.U.D.S. iBR and iS will report an ECM CAN problem.
iBR (intelligent Brake and Reverse)	Engine is set to limp home mode. iBR gate will not move. "Locked" in neutral. iBR light is ON. Check engine light is ON. Some functions not displayed such as: Lake water temperature, no VTS, no F, N and R indication.	3 modules instead of 4 will be active. iBR tab and its data will not be available in B.U.D.S. ECM and iS will report an iBR CAN problem.

CAN FAULTY WIRES (no communication)	VEHICLE BEHAVIOR OR OBSERVATION IN INFORMATION CENTER	OBSERVATION IN B.U.D.S.
iS (intelligent Suspension)	iS handlebar controls have no effect. No DOCK mode. Suspension will remain to its last position before the CAN problem. iS position is not displayed.	3 modules instead of 4 will be active. iS tab and its data will not be available in B.U.D.S.
Depth sounder	The menu Depth Sounder Indicator will not be visible. The Depth menu will not be available.	Nothing will be observable.
Diagnostic connector	Nothing will be observable.	B.U.D.S. will not be able to communicate with any electronic module. "No vehicle detected" message will be displayed in B.U.D.S.

NOTE: If the gauge cannot communicate with an optional module (iS module or depth sounder) during the initial power up, the gauge will interpret this as if the vehicle is not equipped with it. No further test of the system occurs and no indication or fault message will be visible. If communication is interrupted after the gauge has already detected them, then the gauge will indicate that there is a communication fault.

COMMUNICATION TOOLS AND B.U.D.S.

SERVICE TOOLS

Description	Part Number	Page
DIAGNOSTIC CABLE	710 000 851	2, 4
MPI-2 INTERFACE CARD	529 036 018	2
MPI-3 INTERFACE CARD	529 036 353	2

GENERAL

Refer to *PROCEDURES* for instructions on the communication tools.

If communication problems occur, refer to *TROUBLESHOOTING* in this subsection.

REQUIRED TOOLS

MANDATORY TOOLS	
A personal computer (laptop or desktop)	
MPI-2 INTERFACE CARD (P/N 529 036 018) **OR** MPI-3 INTERFACE CARD (P/N 529 036 353)	
DIAGNOSTIC CABLE (P/N 710 000 851)	
OPTIONAL TOOL	
Extension cable available at electronic retail outlets. Do not exceed 7.5 m (25 ft)	

TROUBLESHOOTING

DIAGNOSTIC TIPS

IMPORTANT: Make sure all connections are made and vehicle is powered up **before starting B.U.D.S.** to allow proper communication between the vehicle and B.U.D.S. software.

Troubleshooting the MPI Connection

MPI Status Lights

The MPI includes 2 status lights that indicate the connection condition: USB and CAN. **Both lights must be GREEN** for the MPI to function properly. Otherwise, refer to the following charts.

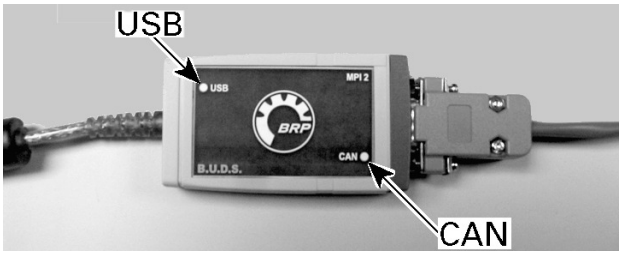

vdd2006-001-151_b

vmr2016-128-001_a

MPI-3 CARD

Prerequisite for USB communication:

– PC Computer turned on
– MPI connected to PC computer.

USB LIGHT	
STATUS	WHAT TO DO
Light is OFF	Check USB connection between MPI card and PC computer. Check USB operation on PC computer (hardware or USB drivers)
Light is GREEN	Connections are GOOD. Communication can take place on USB side

Prerequisite for CAN Communication:

– MPI card connected to diagnostic connector on vehicle.
– Ignition key installed and turned to ON (electrical system powered up without engine started).
– B.U.D.S. started and logged on.

CAN LIGHT	
STATUS	WHAT TO DO
Light is OFF	Check connection between MPI card and diagnostic connector on vehicle
Light is RED	Check CAN wires/connectors on vehicle
Light is GREEN	Connections are GOOD. Communication can take place on CAN side

Communication Problems when Using B.U.D.S.

Missing Module

If one or more ECM is not communicating with the MPI, refer to *DIAGNOSTIC AND FAULT CODES* subsection.

No Vehicle Detected

If an “X” is shown in the status bar and the protocol tool is blinking between Kw2000 500K and Kw2000, it means that no ECM is communicating with the MPI.

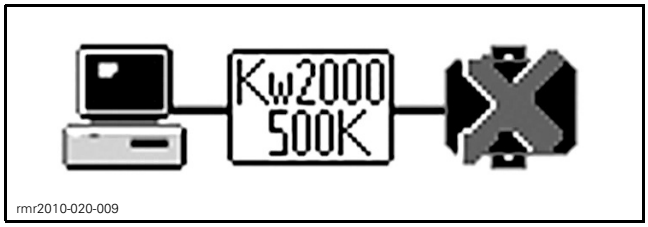

rmr2010-020-009

1. Check connections between the PC computer and the vehicle.
2. Ensure the electrical system is powered up.

NOTE: The **tether cord** must be installed.

3. Ensure both USB and CAN lights on the MPI are GREEN. Refer to *TROUBLESHOOTING THE MPI CONNECTION* subsection.

If B.U.D.S. does not automatically exit the following message box, click the **Try active detection mode** button. This will manually establish the communication with the ECUs.

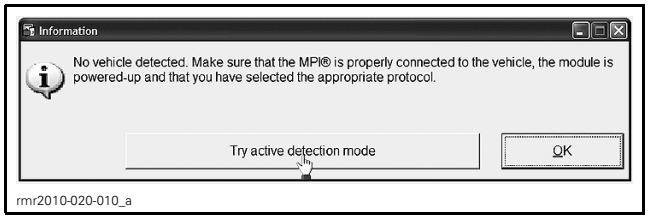

rmr2010-020-010_a

Message Box: "Some of the Information Normally Displayed..."

If the following message box is displayed in B.U.D.S.:

smr2009-028-016

1. Click on the **OK** button in the box.
2. Ensure the tether cord is properly installed.
3. **Briefly** press the vehicle START button to activate the ECM. **Do not hold START button to avoid engine starting**.
4. Click on the **Read Data** button in B.U.D.S.

Message Box: "Engine must be Stopped..."

If the following message box is displayed in B.U.D.S.:

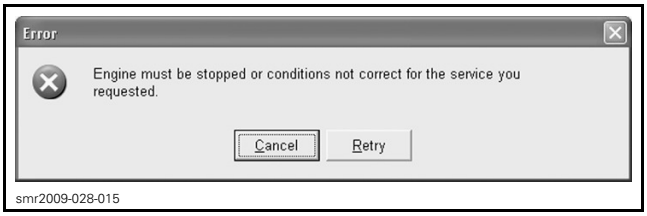

smr2009-028-015

1. Click on the **Cancel** button in B.U.D.S.
2. Ensure the tether cord is properly installed.
3. **Briefly** press the vehicle START button to activate the ECM. **Do not hold START button to avoid engine starting**.
4. Continue with the procedure undertaken prior to the appearance of the message box.

PROCEDURES

MULTI-PURPOSE INTERFACE CARD (MPI-2 OR MPI-3)

The MPI (Multi-Purpose Interface) in conjunction with the diagnostic cable is used with B.U.D.S. to communicate with the ECM (engine control module) and other modules.

MPI Card Power

The MPI card uses the power from the PC computer's USB port.

Diagnostic Connector Location

The 6-pin diagnostic connector is located beside the battery, stored in it's protective cap.

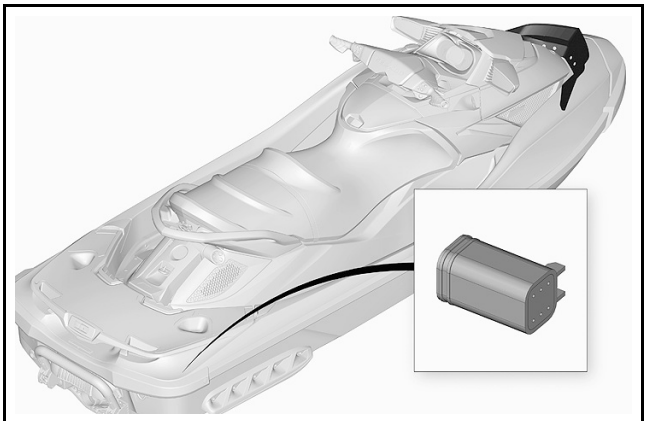
smr2016-024-002

MODELS WITH SUSPENSION

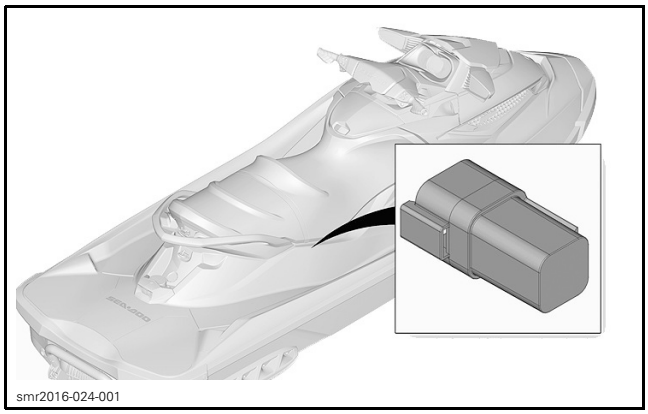

MODELS WITHOUT SUSPENSION

Connecting the PC to the Vehicle

⚠ WARNING

If the computer you are using is connected to the 110 Vac power outlet, there is a potential risk of electrocution when working in contact with water. Be careful not to touch water while working with the VCK.

1. Locate the 6-pin diagnostic connector, refer to *DIAGNOSTIC CONNECTOR LOCATION* in this subsection.
2. Disconnect the 6-pin diagnostic connector from it's holder (protective cap).
3. Connect one end of the DIAGNOSTIC CABLE (P/N 710 000 851) to the vehicle connector.

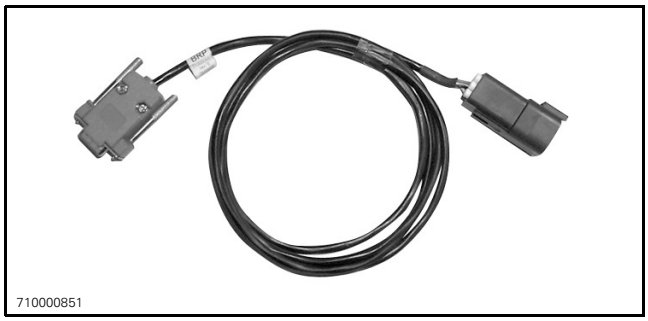

DIAGNOSTIC CABLE CONNECTED TO VEHICLE

4. Connect the other end of diagnostic cable to the MPI card.
5. Connect the MPI card to the USB port of a PC (personal computer).

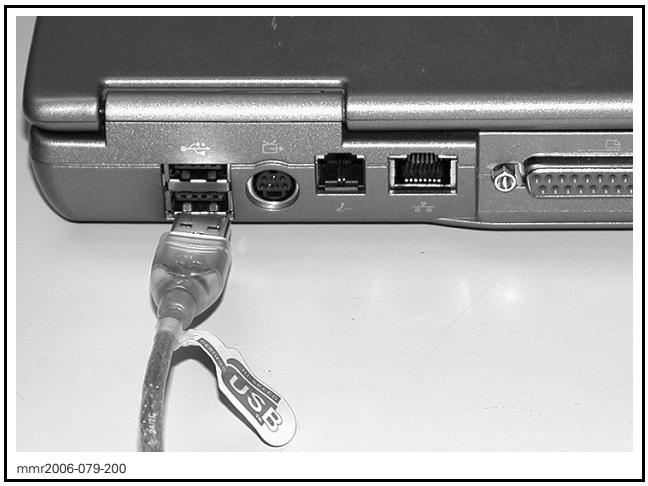

MPI CARD CABLE CONNECTED TO USB PORT

6. Use B.U.D.S. as described further in *B.U.D.S. SOFTWARE* topic

B.U.D.S. SOFTWARE

B.U.D.S. (BRP Utility and Diagnostic Software) is designed to allow programming key(s) to the vehicle, allow electrical and electronic component monitoring, activation of certain components for diagnostic purposes, and to carry out settings changes.

For more information pertaining to the use of the B.U.D.S. software, use its help which contains detailed information on its functions.

Always use the latest applicable B.U.D.S. version available on BOSSWeb.

Reading Electronic Control Units Using B.U.D.S.

IMPORTANT: Ensure all connections have been made **before starting B.U.D.S.** to allow proper operation. Refer to *MPI* in this subsection.

1. Press the START button to wake up the electrical system.
2. Install the tether cord on the engine cut-off switch.
3. Start B.U.D.S. and logon.

NOTE: B.U.D.S. will automatically choose the appropriate MPI protocol.

4. Ensure the appropriate number of modules is shown in the status bar.

NUMBER OF MODULES	MODULES
2	ECM and cluster
3	ECM, cluster and iBR
4	ECM, cluster, iBR and iS

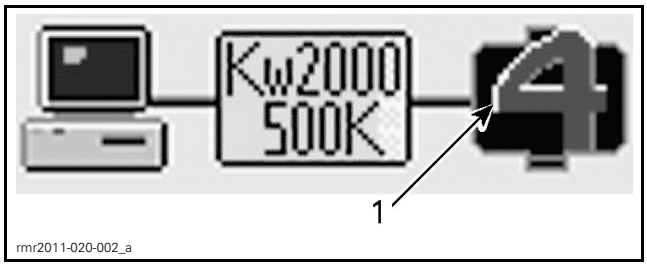

1. *Number of modules*

5. Read electronic modules by clicking the **Read Data** button.

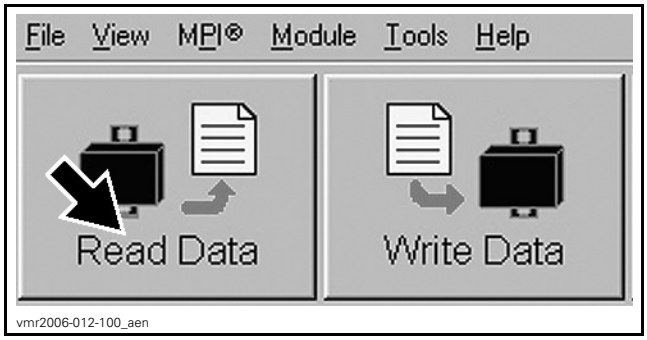

B.U.D.S. is now ready to use.

Updating Electronic Control Module (ECM) Software

NOTICE **Failure to strictly follow a procedure to update a module may permanently damage the module.**

Whenever B.U.D.S. is first connected to a vehicle, check for an update icon in the status bar at the bottom of the **Vehicle** page.

TYPICAL

If the update icon is visible, B.U.D.S. indicates that a file is available to update at least one of the electronic modules:

NOTE: If an update file is available on *KNOWLEDGE CENTER* but the B.U.D.S. software being used is not up to date, the update icon will not appear. Refer to the *SERVICE BULLETINS* to see if there is an update available.

Use the **Module** submenu and check all modules one at a time to see which module(s) can be updated.

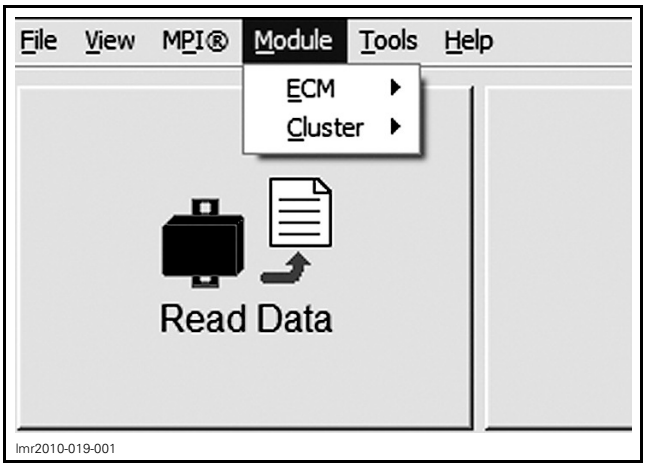

TYPICAL - MODULE SUBMENU LIST

1. If the **Update** option is **greyed out**, no update file is available for this module.
2. If the **Update** option is **black**, an update file is available for this module.

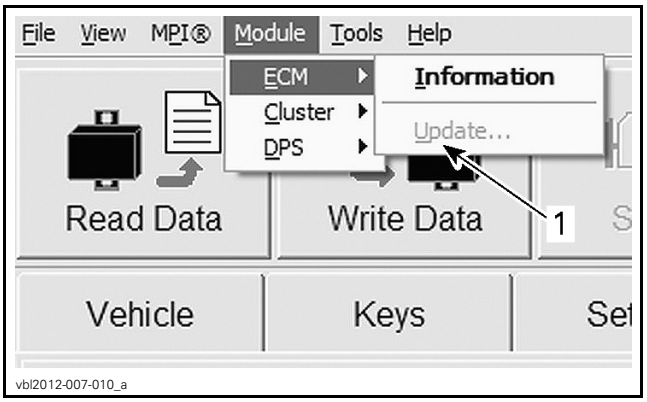

1. *Greyed out: No update to perform*
   Black: Update file available

Before applying an update, log onto *KNOWLEDGE CENTER* and search the vehicle's VIN to find the unit's history.

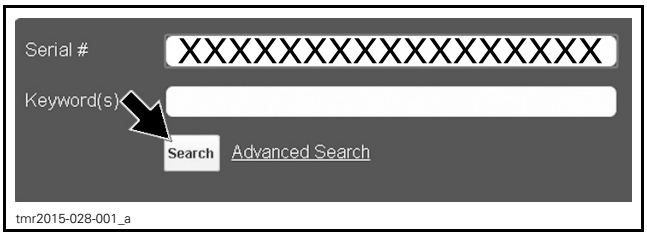

Complete all *WARRANTY CAMPAIGNS TO VERIFY*.

NOTE: *PRODUCT HISTORY* will show all repairs performed and claimed under warranty.

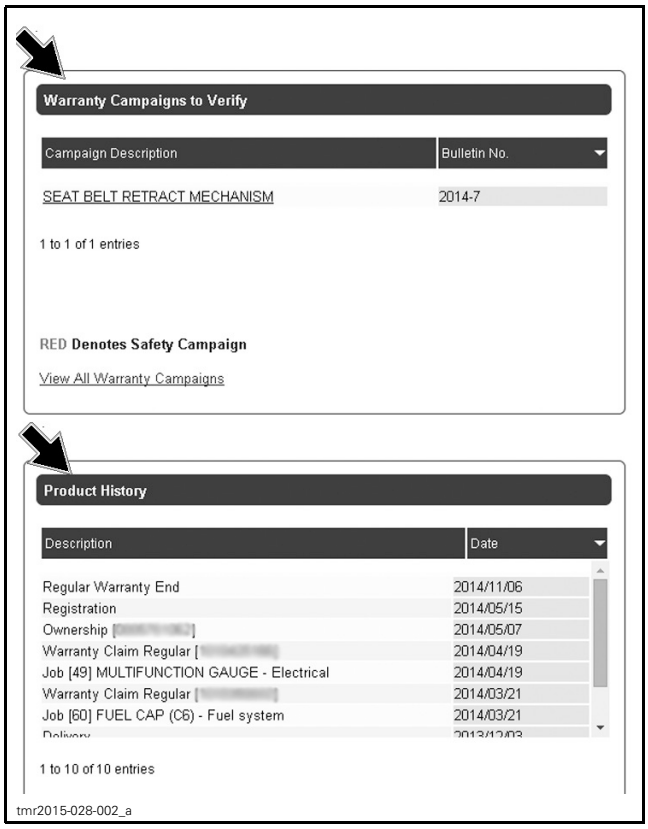

NOTE: When selecting the update menu in B.U.D.S., a dialog box will appear and the update file description may give some clue to finding the vehicle-related information on *KNOWLEDGE CENTER* .

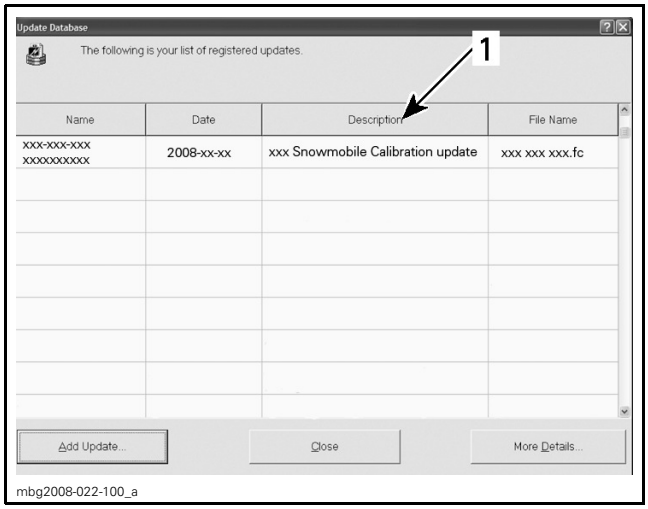

TYPICAL
1. *File description*

Writing Changes in an ECM

If the word **Modified** appears at the end of the vehicle file name at the top of the B.U.D.S. page, then a change has been made that requires it to be saved to the proper electronic module.

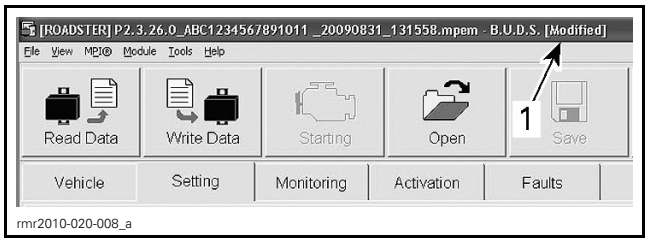

TYPICAL
1. *Indicate setting or data modified; Write Data to save*

Click the **Write Data** button.

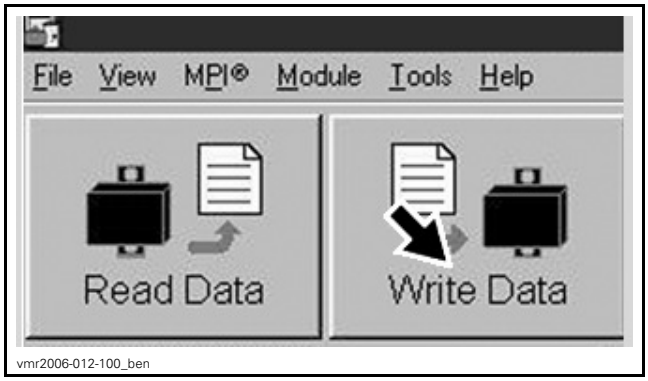

NOTE: A message box will confirm a successful operation.

In such a case, turn ignition switch OFF, then wait for the message to disappear before disconnecting the MPI.

Disconnect MPI card and store the vehicle diagnostic connector in its protective cap.

NOTICE **Failure to secure the diagnostic connector in its protective cap may result in corrosion or other damage to the terminals.**

DIAGNOSTIC AND FAULT CODES

GENERAL

MONITORING SYSTEM

This system monitors the electronic components of the EMS (engine management system), iBR, information center, iS and other components of the electrical system to detect if they are faulty or defective. The monitoring system becomes active when the START button is pressed.

NOTE: Some components need the engine to be running to be monitored (fuel injectors for example).

The following components or functions are monitored.

EMS MONITORING
Battery voltage
EMS sensors (TAS, TPS, CPS, CAPS, MAPS, MATS, CTS, OPS, EGTS, TOPS, knock sensor). Throttle actuator, ignition coils and fuel injectors
ECM
Engine RPM
CAN
D.E.S.S. system
START switch and starter solenoid
Fuel pump
O.T.A.S.
Information center
iBR module

iBR MONITORING
iBR module and motor
BRLS
Engine RPM
Vehicle speed
iBR gate position
CAN
Lake temperature sensor
Information center
ECM

INFORMATION CENTER MONITORING
Information center
VTS, Sport and ECO switch
MODE and SET switch
Cruise switch
CAN
GPS
Fuel level sensor
Depth sounder
ECM
iBR module
iS module

iS MONITORING
iS module and motor
Vehicle speed
Suspension position
CAN
TOPS
Information center
iBR module

When a malfunction is currently detected, the related electronic module:

- Sets an active fault code.
- Adapts the proper protection strategy according to the failure.
- Sends out warning signals to the information center/beeper codes to inform the rider of a particular condition.

When a minor or transient fault occurs, the fault message and beeper will cease automatically if the condition that caused the fault does not exist anymore.

If a minor fault is active, the engine will operate without a noticeable loss of performance.

Releasing the throttle and letting the engine return to idle speed may allow normal operation to resume. If this does not work, try the following:

- Remove tether cord from the engine cut-off switch.
- Wait 3 minutes to allow the ECM to shut down.
- Start engine.
- Check if the fault code is still active.

The electronic system will react differently depending on the fault type. If a severe failure occurs, the engine may not be allowed to be started. In other cases, the engine may operate in limp home mode (reduced speed) or not be affected at all.

These strategies are used to protect the engine system from damage and to maintain safe operation of the vehicle.

Limp Home Mode

When a major component of the EMS or the iBR is not operating properly, limp home mode will be set. Engine speed will be limited and therefore vehicle speed.

This mode allows the rider to return home which would otherwise not be possible.

When this mode is active, LIMP HOME MODE will be displayed in the information center.

Indicator Lights and Message Display Information

The fault indicators and messages displayed in the information center will inform you of a particular condition or if an anomaly occurs.

Standard Gauge

FAULT INDICATOR (ON)	MESSAGE DISPLAY	DESCRIPTION
	HIGH TEMPERATURE	Engine or exhaust system overheating
	CHECK ENGINE or LIMP HOME MODE	Check engine (minor fault req. maint.) or iBR system fault or LIMP HOME MODE (major eng. fault)
	LOW or HIGH BATTERY VOLTAGE	Low/high battery voltage
	LOW OIL PRESSURE	Low engine oil pressure detected
	iBR MODULE ERROR	iBR system fault

X Gauge

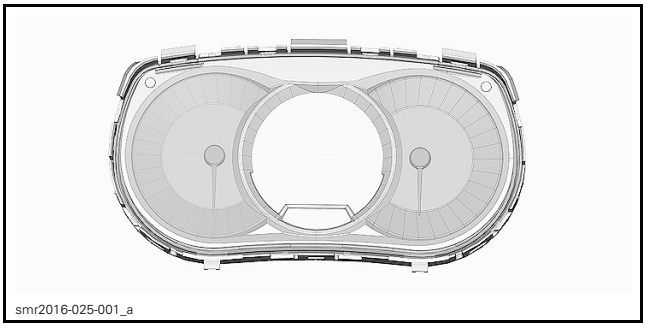
smr2016-025-001_a

PILOT LAMPS (ON)	MESSAGE DISPLAY	DESCRIPTION
	LOW or HIGH BATTERY VOLTAGE	Low/high battery voltage
	HIGH TEMPERATURE	Engine or exhaust system overheating
	CHECK ENGINE or LIMP HOME MODE	Check engine (minor fault req. maint.) or LIMP HOME MODE (major eng. fault)
	LOW OIL PRESSURE	Low oil pressure
	_	iBR system fault
O.T.A.S.	_	OTAS system fault

FAULT MESSAGES	
RIGHT KEYPAD ERROR	Gauge control button malfunction
LOW OIL PRESSURE	Engine low oil pressure detected
HIGH EXHAUST TEMPERATURE	High exhaust temperature detected
HIGH TEMPERATURE	High engine temperature detected
CHECK ENGINE	Engine management system malfunction or maintenance required
HIGH BATTERY VOLTAGE	High battery voltage detected
LOW BATTERY VOLTAGE	Low battery voltage detected
LIMP HOME MODE	Major fault detected, engine power limited
FUEL SENSOR DEFECTIVE	Fuel level sensor fault
WATER TEMP SENSOR DEFECTIVE	Problem in iBR, not sending water temperature info
CALIBRATION CHECKSUM ERROR	Information center programming corrupted
MAINTENANCE REQUIRED	Watercraft maintenance required
DEPTH SOUNDER MODULE COMMUNICATION PROBLEM	Error message if depth sounder is disconnected while riding
IS MODULE COMMUNICATION PROBLEM	Error message if communication with the suspension module is lost while riding
iBR MODULE ERROR	Error message if communication with the iBR module is lost while riding
FUNCTION CANNOT BE ACTIVATED	Message when a function is not or cannot be properly activated
WRONG KEY	Key not programmed for this watercraft
O.T.A.S. MAINTENANCE REQUIRED	Maintenance on O.T.A.S. required

Beeper Signals

When one of the below conditions occurs, the monitoring system emits the following beep signals.

BEEPER CODES	DESCRIPTION
A 1 second beep every 5 second interval (while installing D.E.S.S. key on engine cut-off switch if ECM is on)	**Bad D.E.S.S. system connection.** Reinstall tether cord correctly over engine cut-off switch.
	Wrong D.E.S.S. key. Use a tether cord with a D.E.S.S. key that has been programmed for the watercraft.
	Defective D.E.S.S. key. Use another programmed D.E.S.S. key.
	Defective engine cut-off switch. Check. Refer to *IGNITION SYSTEM* subsection.
	Improper operation of ECM or defective wiring harness. Check. Refer to *ELECTRONIC FUEL INJECTION (EFI)* subsection.
A 2 second beep every 5 minute interval	**Low fuel level.** Refill fuel tank. If problem persists, check sensor and circuit. Refer to *FUEL TANK AND FUEL PUMP* subsection.
	Fuel tank level sensor or circuit malfunction. Check sensor and circuit. Refer to *FUEL TANK AND FUEL PUMP* subsection.
Continuously beeps	**High engine coolant temperature.** Refer to *COOLING SYSTEM* subsection.
	High exhaust temperature. Refer to *ELECTRONIC FUEL INJECTION (EFI)* subsection.
	Low oil pressure. Turn off engine as soon as possible. Check oil level and refill. Refer to *LUBRICATION* subsection.

FAULT CODES

A fault code is an indication that a malfunction is detected by the monitoring system of the vehicle.

Fault Code Categories

A fault code consists of an alphanumeric designator followed by a hexadecimal number of 3 digits. The alphanumeric designator defines the category of the fault code while the hexadecimal number refers to a unique fault.

FAULT CODE CATEGORIES		
ALPHANUMERIC DESIGNATOR	MODULE/ SYSTEM	EXAMPLE OF FAULT CODE
From B0 to B3	Body (include information center and switch faults)	B2211
From C0 to C3	iBR and iS	C007B
From P0 to P3	Power train and related system faults (includes ECM)	P062F
From U0 to U3	Communication between modules and sensors	U0179

RELATED MODULE AND FAULTS	
MODULE	FAULT CODE CATEGORY
ECM (engine control module)	Stores mainly “P” codes and some “U” codes
iBR (intelligent brake and reverse)	Stores mainly “C” codes and a few “U” codes
iS (intelligent suspension)	Stores mainly “C” codes and a few “U” codes
Cluster	Stores mainly “C” codes and a few “U” codes

Reading Fault Codes Using the Information Center

NOTE: A fault code must have the "Active" state to be displayed in the multifunction gauge.

1. Press the MODE button repeatedly until the FAULT CODE function is visible in the multifunction display.
2. Press the SET button or the UP or DOWN arrow button to enter the function and display the first fault code.
3. Press the UP or DOWN arrow button repeatedly to display each subsequent code.

NOTE: When the last fault code has been displayed and the button is pressed again, the system loops back to the first fault code displayed, and all fault codes can again be displayed. If there was one active fault code when entering FAULT CODE mode, and it becomes occurred (no longer active), a NO ACTIVE FAULT CODE message will scroll in the display.

4. To exit the FAULT CODE display function, the MODE or SET button must be pressed once. There is no time-out on this function.

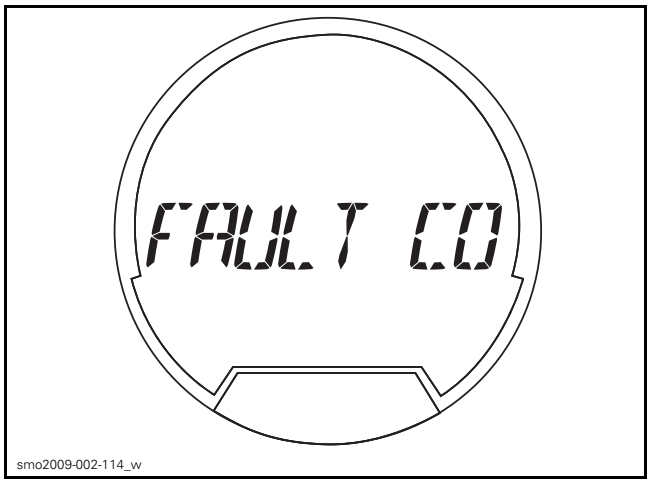

FAULT CODE DISPLAY FUNCTION

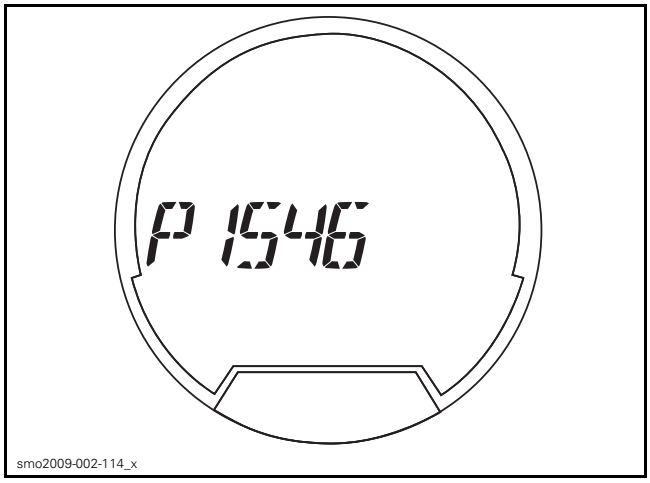

TYPICAL - ENGINE FAULT CODE EXAMPLE

Reading Fault Codes Using B.U.D.S. Software

NOTE: All fault code types can be read with B.U.D.S.

1. Connect vehicle to the latest applicable B.U.D.S. software. Refer to *COMMUNICATION TOOLS AND B.U.D.S.* subsection.

2. Click on the **Read Data** button.
3. Click on the **Faults** tab.

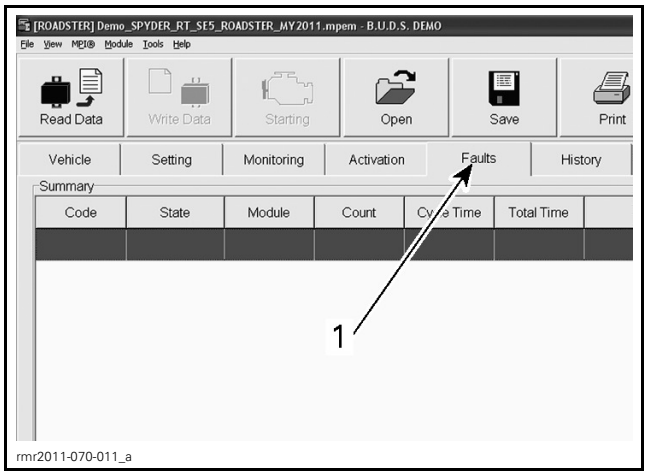

TYPICAL
1. *Fault tab*

4. Click on the drop-down list on the LH lower corner.
5. Choose the fault state to display.

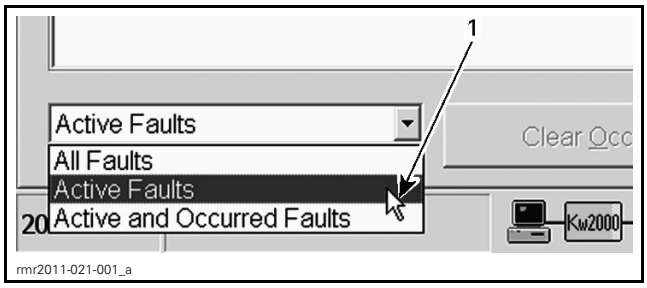

TYPICAL
1. *Drop down list*

FAULT STATE	INFORMATION
All faults	Display all possible faults regardless of state
Active faults	Display only faults matching this state. Empty area if there is no active fault
Active and occurred faults	Display only faults that have either state. Empty area if there is neither active nor occurred fault

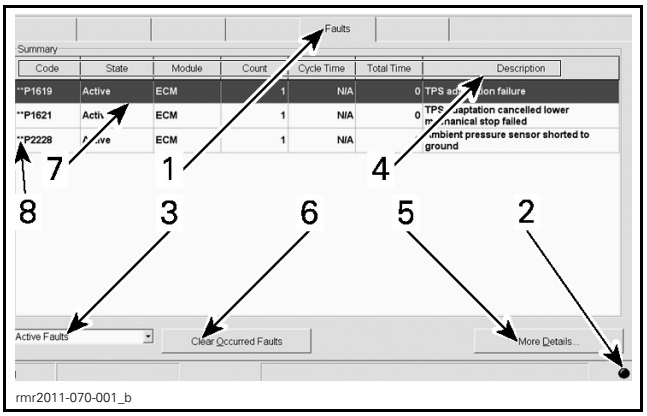

TYPICAL FAULT PAGE
1. *Fault tab*
2. *Fault indicator light*
3. *Fault code state drop box*
4. *Fault nomenclature*
5. *More details button*
6. *Clear occurred faults button*
7. *Selected fault*
8. *More information indicator*

FAULT PAGE DESCRIPTION	
ITEM	INFORMATION
Fault tab	Click tab to display the fault page
Fault indicator light	When flashing, it indicates there is active fault(s)
Fault code state drop box	Click drop box to select the type of faults to display
Fault nomenclature	Display specific information and statistics related to the fault (see fault nomenclature table)
More details button	To display possible causes and service actions related to the selected fault
Clear occurred faults button	To clear all occurred faults in related ECU(s)
Selected fault	When a fault is selected, additional information pertaining to that fault will be displayed when clicking the "More details" button. To select a fault, click on the fault with the mouse or use the cursor up or down to scroll to the desired fault

FAULT NOMENCLATURE	
COLUMN	INFORMATION
Code	Fault code number. When 2 stars (**) precedes the code, detailed conditions when the fault occurred, can be displayed by clicking the "More details" button
State	Display the fault state (active, occurred, inactive)
Module	Displays the module that reports the fault code. This is the module that detects or has received a message of an anomaly and reports it. List of modules: Multifunction gauge ECM (engine control module) iBR (intelligent brake and reverse) iS (intelligent suspension)
Count	Number of times this fault occurred within the driving cycle Value: From 0 to 255
Cycle time	Not to be used Value: From 0 to 255 minutes
Total time	Not to be used Value: From 0 to 64 255 minutes
Description	Provides a short description of the fault

When reading a fault code in B.U.D.S., pay particular attention to which module reports a fault. It is indicated in the **Module** column.

The **Description** column gives a short description of the fault.

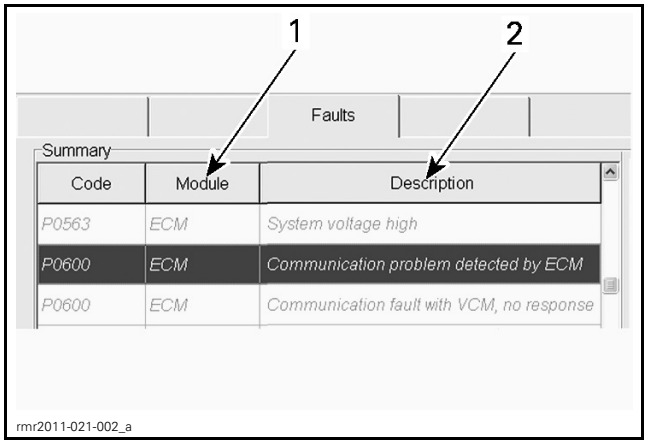

SOME COLUMNS REMOVED FOR CLARITY PURPOSE
1. *Module that reports a fault*
2. *Fault description*

Click on the **More Details** button, on the RH lower corner, to display the "Possible Causes" and the "Service Actions" to step further in the diagnosis.

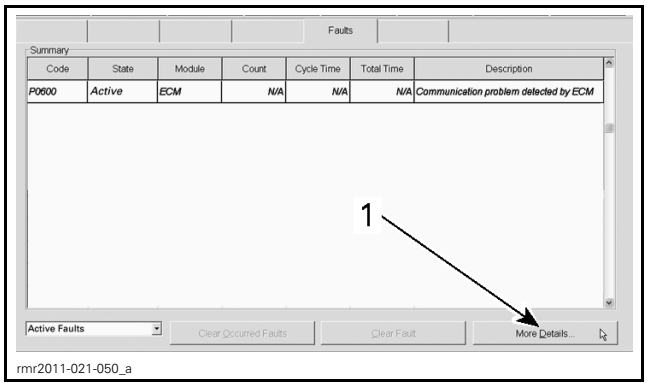

TYPICAL
1. *Click here*

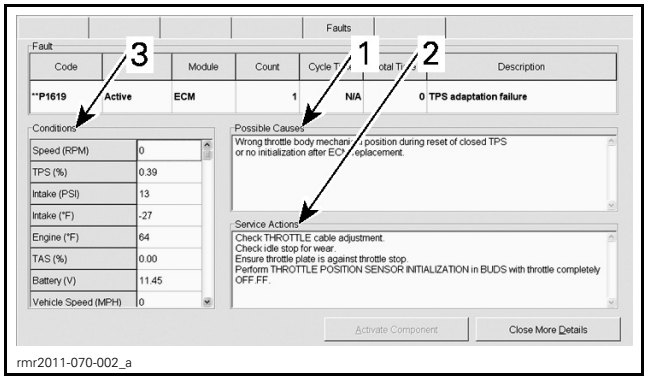

TYPICAL — MORE DETAILS PAGE
1. *Possible causes related to the selected fault*
2. *Service actions*
3. *Operating conditions when fault occurred*

MORE DETAILS PAGE DESCRIPTION	
ITEM	INFORMATION
Possible causes	List the possible causes that triggered the fault
Service actions	List the possible actions to perform to solve the fault
Conditions when fault occurred	List the operating conditions of the engine and/or vehicle when the fault was triggered

Fault Code States

The various electronic control units (ECUs) used in the vehicle can generate a variety of fault codes depending on the level of monitoring they are capable of. Fault codes have 3 possible states:

– Active
– Occurred
– Inactive.

Click the **Fault** tab then click on the drop-down list on the LH lower corner.

Choose the fault code state you want to display.

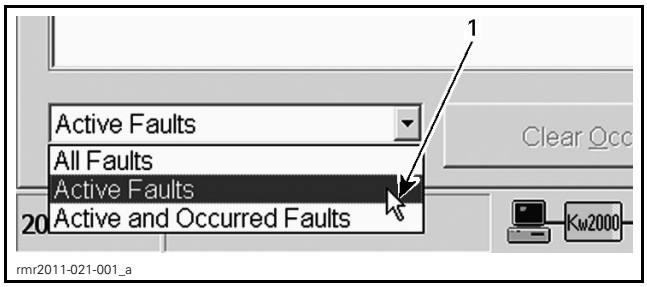

TYPICAL
1. Drop down list

FAULT STATE	INFORMATION
All faults	Display all possible faults regardless of state
Active faults	Display only faults matching this state. Empty area if there is no active fault
Active and occurred faults	Display only faults that have either state. Empty area if there is neither active nor occurred fault

Active Fault Codes

An active fault code is an indication of a fault that is **currently triggered**.

The active fault may or may not compromise normal operation of the related system(s). Service action in B.U.D.S. should be used to correct the problem that caused the fault code.

Once the fault condition(s) of the active fault is no longer present, its state will change to "occurred".

Occurred Fault Codes

An occurred fault code indicates a fault that was active, but **no longer** is.

The occurred fault does not presently affect system or component operation but is retained as a history of the faults that were detected.

Inactive Fault Codes

An inactive fault code represents a fault code that is neither active, nor occurred. It is simply part of a list of all possible faults which may be monitored by the various ECUs, which may become active or occurred if the monitoring system detects an applicable fault.

Clearing Fault Codes

Connect vehicle to the latest applicable B.U.D.S. software. Refer to *COMMUNICATION TOOLS AND B.U.D.S.* subsection.

Click on the **Read Data** button.

Click on the **Faults** tab.

NOTE: Only the **Occurred** state faults can be cleared.

Click the **Clear Occurred Faults** button.

CLEAR OCCURED FAULTS

This will reset the appropriate counter(s) and will also record that the problem has been fixed in the related module memory.

Observe the "Occurred" fault(s). They should all disappear. Otherwise, follow this procedure.

– Remove tether cord cap from engine cut-off switch.
– Wait 3 minutes.
– Repeat procedure to clear faults again.

FAULT CODE DIAGNOSTIC

Missing Module

If a module is missing, several fault codes will appear.

To quickly find which module is missing, perform the following:

1. Connect vehicle to the latest applicable B.U.D.S. software. Refer to *COMMUNICATION TOOLS AND B.U.D.S.* subsection.
2. Click on the **Read Data** button.
3. Click **Module** in the menu bar.
4. Look at the list of modules.
5. If a module is not visible, then it is not communicating through the CAN bus (controller area network).

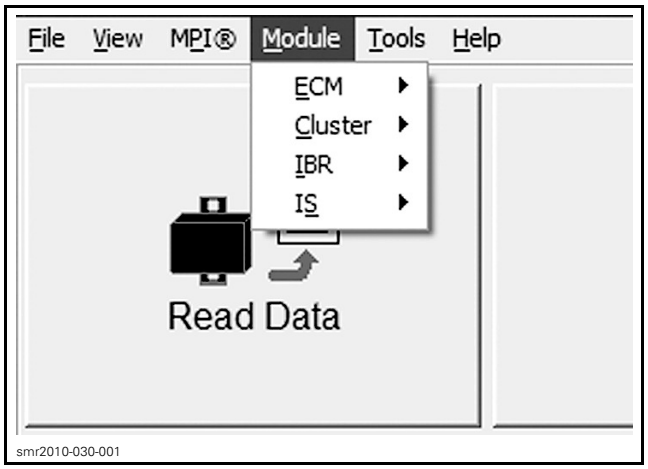

TYPICAL — MODULE SUBMENU LIST (MODELS WITH iBR AND iS)

6. Refer to the following table to find the appropriate subsection in this manual to diagnose the missing module.

MISSING MODULE	SECTION TO REFER TO
ECM	*ELECTRONIC FUEL INJECTION (EFI)*
Cluster	*INFORMATION CENTER (GAUGE)*
iBR	*iBR AND VTS*
iS	*SUSPENSION (iS)*

Diagnostic Tips Using B.U.D.S.

History Page

HISTORY PAGE DESCRIPTION	
ITEM	INFORMATION
Last minute	Displays several parameters recorded in the last minute of engine operation
Minimum/ Maximum	Display the minimum and maximum values encountered. Click "Clear Min/Max" to reset the values
Run time	Display the time proportion in what mode the engine was running in
RPM profile	Display the RPM range proportion in which the engine was running in

To see the last minute of operating conditions, click on the **History** tab in B.U.D.S.

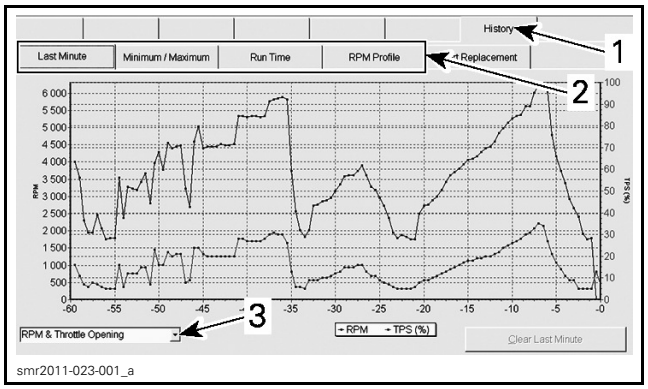

1. *History tab*
2. *Additional history pages*
3. *Drop-down list in Last Minute page*

Last Minute Drop-Down List:

From the **Last Minute** page, click on the drop-down list on the LH lower corner.

Choose the values to display.

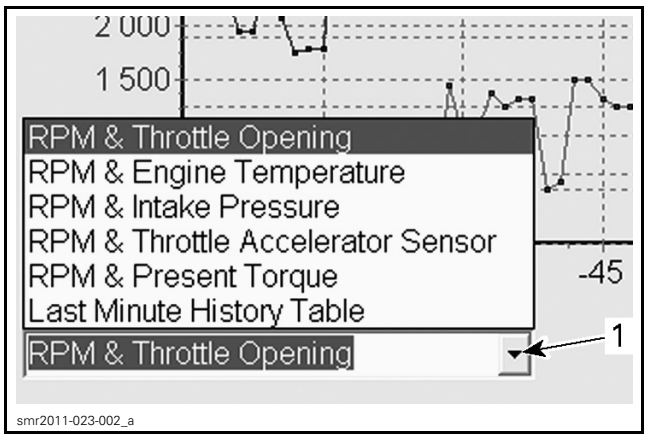

1. *Drop down list*

Guidelines to Solve Fault Codes

CONDITION	ACTION
Troubleshooting vehicle	Use B.U.D.S. to: Read fault codes. Display "Active" faults to see components currently not operating normally. Display "Occurred" faults to troubleshoot intermittent problems. Monitor system(s), sensor(s), switches and actual conditions. Activate component(s) for troubleshooting. Set components etc. Know the last minute of operating conditions by using the "History" page. Know the operating conditions, if available, when a fault code occurred by using the "More details" button in the fault page.
New fault(s) appear after a vehicle maintenance or repair	Check sensor connections or mixed up connections. **Before** vehicle maintenance: Read the electronic modules with B.U.D.S. Save and print the B.U.D.S. file (keep faults option only). **After** vehicle maintenance: Read the electronic modules with B.U.D.S. Compare the fault code(s) before and after the maintenance using the printed copy and the current B.U.D.S. reading. Investigate only the newly fault codes. Clear all occurred faults in B.U.D.S.
Communication faults displayed as "Occurred" after module flashing	Normal behavior when flashing a module. Clear all occurred faults and check again.
Sensor "Active" fault	Read the fault description in B.U.D.S. Click on the "More Details" button. Look at the "Conditions" when available. Read the "Possible Causes". Apply the "Service Actions".
Several fault codes active at the same time	Likely to be caused by burnt fuse(s) or bad bus bar connection(s).
Low system voltage on one module Power problem on sensor(s)	Check related fuse(s) and relay. Check related power and ground wires. Check for common power supply to several sensors/modules (refer to *POWER DISTRIBUTION AND GROUNDS)*. **NOTE:** Some sensors are supplied by the battery while others are supplied by a module.
Low system voltage on several modules (several communication faults will also appear)	Check battery condition and connections. Check related fuse(s) and relay. Check voltage regulator/rectifier.
High system voltage on several modules	A battery charger has likely been used to substitute the vehicle battery. Clear all occurred faults and check again. Check voltage regulator/rectifier.
When all modules report that a module is missing	Check the module that is reported as missing. Check related fuse(s) and relay. Check related power and ground wires.
When several modules are in fault	Search for a common problem such as a faulty sensor.

CONDITION	ACTION
CAN bus failure, CAN buss OFF	When several modules and sensors report that a module is missing. The missing module may report CAN bus failure, CAN bus off. Check related CAN wires (continuity, short to ground, short between CAN low and high). Check module pins and wiring terminals. Then, the other modules should stop reporting that module is missing.
Occurred fault(s)	May have been generated due to a system or component that was momentarily operating outside normal parameters.
	May be generated when disconnecting and reconnecting a component, replacing a burnt fuse, or may be due to a momentary high or low voltage.
	Before being "Occurred", a fault has always been "Active" for a certain time, indicating that an unexpected condition or problem has been present during the driving cycle. A frequent momentarily fault or an intermittent fault may never be seen as "Active" in B.U.D.S. while there is still a pending problem. This type of malfunctions can be discovered by looking at the "Occurred" faults and then by evaluating the fault count. As long as a fault is present, it is displayed as "Active".
Fault count (0 - 255)	**Low value:** Suggests handling problems (connections, terminal contact/shape etc.). **High value:** Suggests a frequent and unsolved problem. The problem should be investigated.
Fault conditions (More details button)	Look for abnormal, excessive values.
Hard to find problems	When the basic troubleshooting has been done and the fault code(s) persists, often the problem is related to the wiring harness, connections or electromechanical components. Short to ground, to battery or between wires. Wire splices, chafing, terminal problems (pulled out, bent, out of shape, corroded etc.). Bad contacts in switch or relay.

GUIDELINES TO SOLVE SPECIFIC FAULT CODES

Refer to the fault code table available on *KNOWLEDGE CENTER*.

INTELLIGENT THROTTLE CONTROL (iTC)

SERVICE TOOLS

Description	Part Number	Page
DIAGNOSTIC HARNESS	529 036 188	11
FLUKE 115 MULTIMETER	529 035 868	12, 15

SERVICE PRODUCTS

Description	Part Number	Page
DIELECTRIC GREASE	293 550 004	13

GENERAL

SYSTEM DESCRIPTION

NOTE: Some functions or features described in this section may not apply to every PWC model, or may be available as an option.

The iTC is an electronic throttle control system that includes a cableless throttle control located on the RH side of handlebar, an electric throttle actuator (ETA) located on the throttle body and the engine control module (ECM). The iTC is often referred to as a "throttle by wire" system.

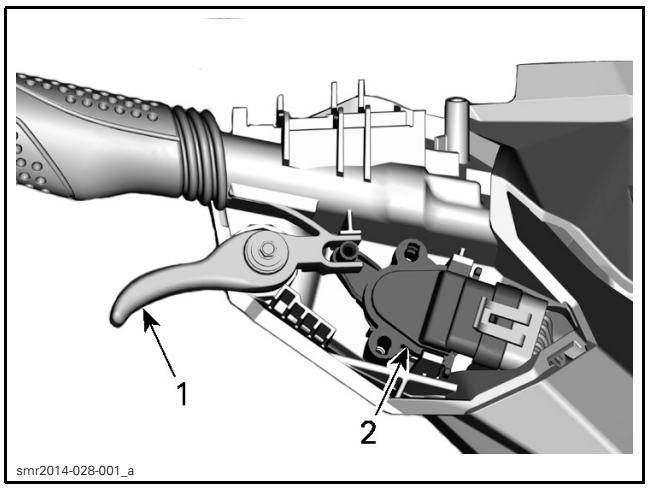

TYPICAL
1. *Throttle lever*
2. *Throttle accelerator sensor (TAS)*

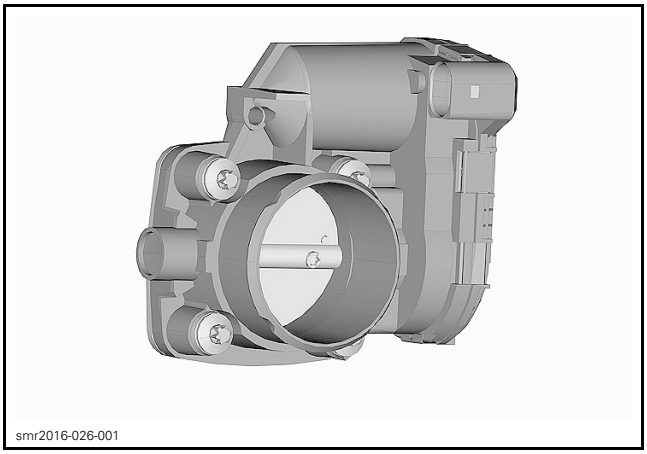

The throttle lever operates the throttle accelerator sensor (TAS). It is a double output hall effect sensor. The redundancy is used for security purposes.

The throttle actuator (ETA) is a DC motor on the throttle body that regulates the throttle plate via a drive gear. Pulse width modulation (PWM) is used to control the motor. In the throttle body, there is a double throttle position sensor (TPS). The redundancy is used for security purposes. The TPS is a potentiometer that supplies the ECM the actual angle position of the throttle plate.

According to the torque demand from the TAS, the ECM powers the ETA motor to rotate towards open or close the throttle plate. When the ECM detects through the TPS that the throttle plate has reached the targeted opening, the ECM stops the throttle actuator.

The iTC allows the throttle actuator to be moved irrespective of the accelerator sensor position since it is not directly linked by a throttle cable.

While the throttle lever might be fully pulled in and held, the ECM could close the throttle plate instead of opening it if the iBR lever were pulled in. Then, the ECM could open the throttle plate to accelerate the engine to increase the braking effect. These different throttle plate movements could be achieved while the throttle lever was still fully pulled in. This is one of the great flexibility of the iTC.

The use of the iTC allows the following additional engine modes of operation.

Touring Mode

Touring mode allows the operator to choose for progressive throttle response at certain engine speed.

Available engine power and acceleration is reduced when accelerating from a complete stop and when operating in the low engine power range under certain conditions.

When throttle is applied, the engine will progressively accelerate to an operating range whereby full power eventually becomes available. If the engine is throttled down sufficiently and for a long enough period of time, engine power and acceleration will again be reduced.

Sport Mode

Sport mode allows the operator for instant throttle response.

Maximum engine power is available throughout the engine operational range.

ECO Mode

When ECO mode is selected (fuel economy mode), engine RPM is limited whereby an optimal cruising speed is maintained in order to reduce fuel consumption.

Cruise Control

Cruise mode is a function of iTC (intelligent Throttle Control) system that allows the operator to set the desired maximum watercraft speed.

This is useful when cruising for long distances, operating in limited speed zones, or towing a tuber, skier or wake boarder.

Cruise mode only limits forward speed, the operator must keep the throttle depressed to maintain forward speed.

Once the maximum cruise speed is set, the operator can vary the watercraft speed from idle speed up to the set cruise speed using the throttle lever. The set cruise speed will not be exceeded even if the throttle lever is fully depressed.

As you proceed under a constant cruising speed setting, keep your attention level up to maintain good situational awareness.

Slowing down is a matter of releasing the throttle lever further than the set point, or by pulling the iBR lever in or decrease speed with the DOWN button.

If the iBR lever is pulled in for braking, CRUISE mode is overridden but **not deactivated**.

Once the iBR lever is released and the throttle is pulled in to engage forward position, the cruise function will reengage to limit the watercraft speed as it was set before iBR lever activation.

Slow Speed Mode

The Intelligent Throttle Control also allows for a Slow Speed Mode where the driver can adjust and set idle speed. This is useful when operating in slow speed zones where the driver must be especially attentive to possible obstacle avoidance.

The throttle plate will open and close as necessary to maintain the set speed.

Ski Mode

Ski mode allows for repeated and precisely controlled launches and a set towing speed, designed specifically for towing a skier or wake boarder.

RAMP Function

The RAMP function available in ski mode is a preprogrammed function used for launching and accelerating the PWC when towing a skier or wakeboarder.

TARGET SPEED Function

The TARGET SPEED function limits the maximum towing speed.

Learning and Rental Keys

Learning and Rental keys limit the watercraft maximum speed. The full stroke of the throttle lever is used while only a partial stroke of the throttle plate is achieved. Therefore, greater throttle lever movement is used while a smaller engine speed and torque variation is applied through the throttle actuator. This permits a more accurate and easier throttle operation to control the engine within a specified torque curve and maximum speed setting for a learner.

O.T.A.S. ™ System (Off-Throttle Assisted Steering)

The O.T.A.S. (Off-Throttle Assisted Steering) system provides additional maneuverability in off-throttle situations. The O.T.A.S. system is electronically activated and slightly increases engine speed under a pre-defined RPM when the driver initiates a full turn. When the handlebar is brought back to its center position, the throttle reverts to idle.

The throttle plate will open and close as necessary to assist the steering.

Limitations

The O.T.A.S. system cannot help maintaining control or prevent collisions in all situations.

OPERATING MODES

Touring Mode

By default, the watercraft is set to TOURING mode of operation when started.

A TOURING mode indicator is ON in the multi-function gauge to confirm the active mode of operation.

Sport Mode

When selected, SPORT MODE provides for instant throttle response and more rapid accelerations than TOURING MODE.

NOTE: Sport mode is not available if using a LEARNING key.

Once activated, SPORT MODE will remain active until it is deactivated by the operator, or the engine is shut down whereby it defaults back to TOURING MODE.

Activating Sport Mode

To quickly activate sport mode while riding at speed, carry out the following:

⚠ WARNING

When activating sport mode, be sure to maintain situational awareness of other watercrafts, obstacles, or persons in the water.

1. Depress and hold the SPORT button for at least 1 seconds.

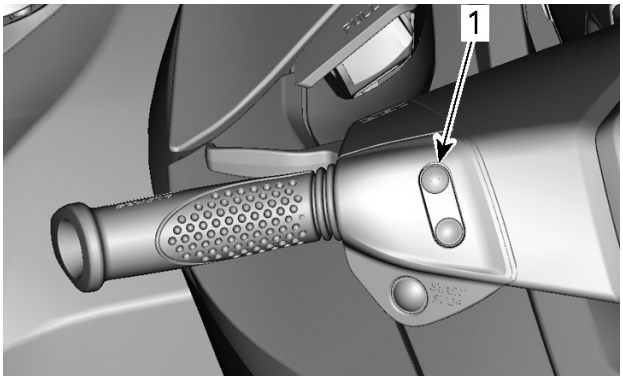

smo2012-002-009_a

TYPICAL
1. Sport button

The following message will be displayed:

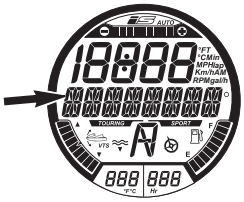

MESSAGE DISPLAYED
ENTERING SPORT MODE - INCREASED ACCELERATION - INSTRUCT PASSENGERS TO HOLD - PRESS_SPORT_BUTTON

⚠ WARNING

Ensure passengers are advised that sport mode provides for increased accelerations and that they are to hold on tightly.

2. Press the SET button again to activate sport mode.

A scrolling SPORT MODE ACTIVATED message will momentarily confirm that sport mode has been activated.

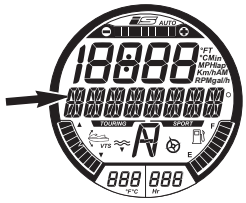

MESSAGE DISPLAYED
SPORT MODE ACTIVATED

NOTE: After a few seconds, the gauge will revert to its normal display.

3. Ensure the SPORT mode indicator is turned on.

SPORT MODE INDICATOR (ALL MODELS EXCEPT RXT-X)

NOTE: The SPORT mode indicator will come on and stay on as long as sport mode is active.

There is no SPORT mode indicator in the multifunction display, but only a SPORT MODE indicator light in the tachometer.

Deactivating Sport Mode

To quickly deactivate sport mode while riding at speed, carry out the following:

⚠ WARNING

When deactivating sport mode, be sure to maintain situational awareness of other watercrafts, obstacles, or persons in the water.

1. Depress and hold the SPORT button for at least 1 seconds.

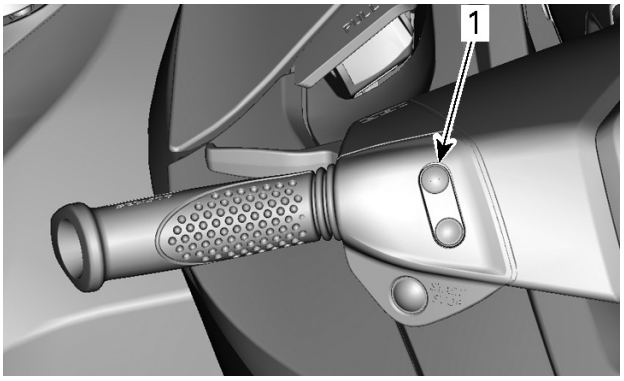

smo2012-002-009_a

TYPICAL
1. Sport button

NOTE: The following message will scroll in the multifunction display: SPORT MODE DEACTIVATED.

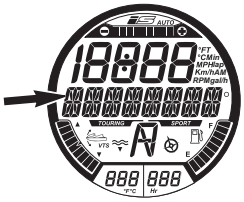

MESSAGE DISPLAYED
SPORT MODE DEACTIVATED

NOTE: After a few seconds, the gauge will revert to its normal display.

2. Ensure the TOURING mode indicator is on.

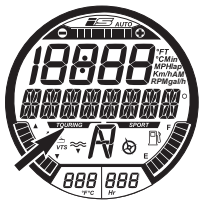

TOURING MODE INDICATOR (ALL MODELS EXCEPT RXT-X/RXT-X aS)

ECO Mode (Fuel Economy Mode)

Activating ECO Mode

1. Depress the ECO button for at least 1 seconds.

smr2016-026-002

The following message will be displayed on the multifunction display:

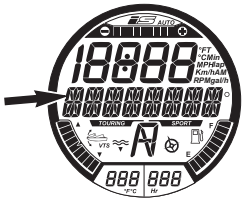

MESSAGE DISPLAYED
ECO MODE

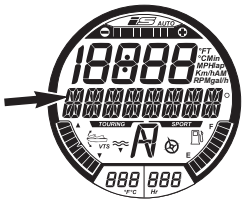

MESSAGE DISPLAYED
FUEL ECONOMY MODE - HOLD SET TO ACTIVATE OR MODE TO EXIT

The ECO mode indicator will also be activated.

Deactivating ECO Mode

1. Depress the ECO button for at least 1 seconds.

The ECO mode indicator will be deactivated.

Cruise Mode

Activating Cruise Mode at Idle Speed

NOTE: This function is available up to approximately 10 km/h (6 MPH).

To activate and preset CRUISE MODE at idle speed, carry out the following:

1. Tap the throttle lever to move the iBR to the forward position.
2. Press and hold the cruise button.

smr2016-026-003

The following message will appear in the multifunction display.

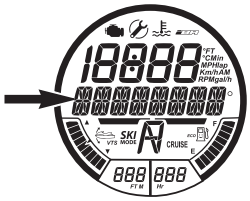

MESSAGE DISPLAYED
CRUISE MODE _ SELECT SPEED _ PRESS SET TO ACCEPT OR MODE TO EXIT

3. Press the UP button until the desired cruise speed is indicated in the numerical display.

The following will be displayed in the multifunction gauge.

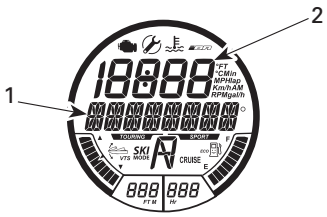

FUNCTION SELECTED - CRUISE MODE
1. CRUISE MODE _ SPEED ADJUSTING 2. Cruise speed set point indication

4. Press the SET button to save the cruise speed selected and engage cruise mode. The following scrolling message will appear in the multifunction display.

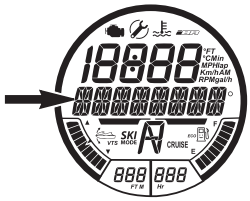

MESSAGE DISPLAYED
CRUISE MODE ACTIVE

A beep indicating that you are now in cruise mode will sound, and a CRUISE indicator will come on in the multifunction gauge.

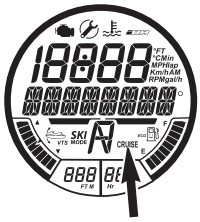

CRUISE MODE INDICATOR

Activating Cruise Mode Above Idle Speed

To activate cruise mode above idle speed (10 km/h (6 MPH)):

1. Accelerate to the desired watercraft speed and hold throttle lever steady.
2. Press and hold the cruise button for approximately 1 second.

A beep indicating that you are now in cruise mode will sound, and a CRUISE indicator will come on in the multifunction gauge.

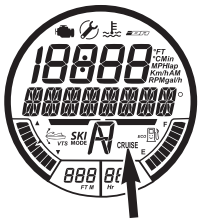

CRUISE MODE INDICATOR

Changing Set Cruise Speed

To **increase** or **decrease** the set cruise speed:

1. Hold the throttle lever all the way in to the handlebar.
2. On the RH handlebar, press UP/DOWN button.

While the UP/Down is being pressed to change the speed setting, the following will appear in the multifunction gauge.

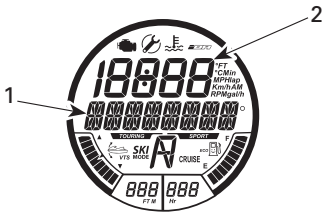

FUNCTION SELECTED - CRUISE MODE
1. CRUISE MODE _ SPEED ADJUSTING 2. Cruise speed set point indication

NOTE: Pressing the UP/DOWN button repeatedly will change the cruise set speed in single increments. Pressing and holding the button will increase or decrease the speed until the button is released.

Deactivating Cruise Mode

To deactivate cruise mode:

1. Release the throttle lever.
2. Press the cruise button.

Deactivation of cruise mode is indicated by:

– The CRUISE indicator will turn off.
– A BEEP will be heard.

NOTE: If the throttle lever is not fully released when the cruise button is pressed to deactivate cruise mode, the BEEP will not be heard and the cruise indicator will remain on. The speed limiting function of cruise mode will stay active until the throttle is fully released, then the BEEP will be heard and the cruise indicator will go out.

Slow Speed Mode

The Intelligent Throttle Control also allows for a Slow Speed Mode where the driver can adjust and set idle speed. This is usefull when operating in slow speed zones where the driver must be especially attentive to possible obstacle avoidance.

The operator can set idle speed between 1.6 km/h to 11 km/h (1 MPH to 7 MPH).

If you accelerate above approximately 14 km/h (9 MPH) , Slow Speed Mode will be deactivated and the engine will return to idle RPM when the throttle is released.

Should a situation arise where the operator must stop or accelerate quickly away from a hazardous situation, pulling in the iBR lever, or pulling in on the throttle lever will deactivate slow speed mode and normal control of the watercraft will be returned to the operator.

Activating Slow Speed Mode

To activate slow speed mode of operation:

1. Release the throttle lever to idle RPM.
2. Pull in and release the iBR lever to engage neutral.
3. Press and hold the cruise button for approximately 1 second.

smr2016-026-003

The CRUISE indicator will come on in the speedometer or multifunction display to indicate cruise activation.

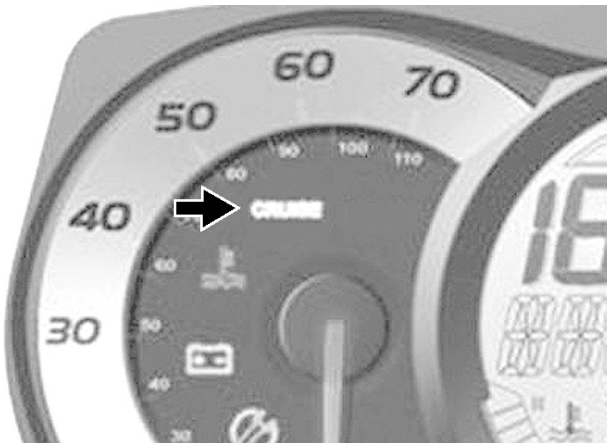

sdd2009-001-034_a

TYPICAL - CRUISE MODE INDICATOR LIGHTIN SPEEDOMETER

A message will scroll in the multifunction display to specify that you are now in slow speed mode.

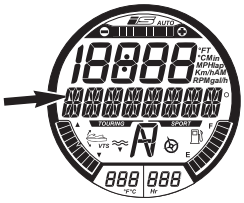

MESSAGE DISPLAYED
SLOW SPEED MODE _ SPEED ADJUSTING

The default slow speed setting of 1 will also come on for a few seconds in the numerical display.

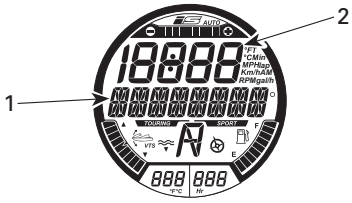

SLOW SPEED MODE INDICATION
1. SLOW SPEED MODE ACTIVATED message 2. Slow speed setting is displayed here for a few seconds

NOTE: The scrolling SLOW SPEED MODE message repeats itself as long as slow speed mode is activated. The numerical display reverts back to the previous indication after a few seconds.

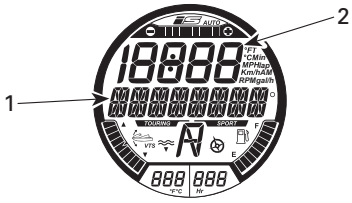

SLOW SPEED MODE INDICATION
1. SLOW SPEED MODE message 2. Numerical display reverts to previous indication

Changing Set Slow Speed

To **increase** or **decrease** the set slow speed, press the UP/DOWN button on the RH handlebar once, or repeatedly.

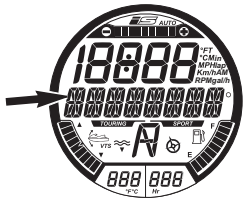

MESSAGE DISPLAYED
SLOW SPEED MODE _ SPEED ADJUSTING

The setting point indication in the digital screen will come back on to indicate the slow speed setting change.

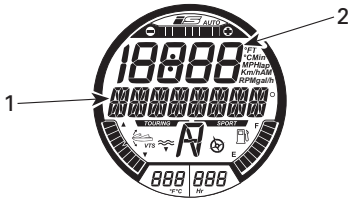

SLOW SPEED MODE INDICATION
1. SLOW SPEED MODE message 2. Numerical display reverts to previous indication

The displays will revert back to their previous indication a few seconds after the last activation of the UP or DOWN button.

NOTE: There are 5 slow speed settings available (1 through 5). Adjust slow speed mode to desired speed.

The following message will scroll across the multifunction display periodically as a reminder.

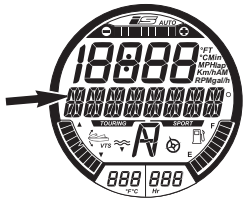

MESSAGE DISPLAYED
SLOW SPEED MODE ACTIVE

The displays will revert back to their previous indication a few seconds after the last activation of the UP or DOWN button.

Deactivating Slow Speed Mode

The slow speed mode can be deactivated using any of the following methods:

– Pressing the cruise button.
– Depressing the iBR lever.
– Accelerating past the set slow speed.

When deactivating SLOW SPEED MODE by pressing the cruise button, or accelerating using the throttle lever, the iBR gate stays in the forward position.

When using the iBR lever, the iBR gate will move towards the reverse position, then neutral when the lever is released.

SLOW SPEED MODE deactivation will be indicated in the following manner:

– The CRUISE indicator will go out.
– The scrolling SLOW SPEED MODE ACTIVE message will cease.

Ski Mode

Ski mode allows for repeated and precisely controlled launches, and a set towing speed, specifically for towing a skier or wake boarder.

Ski mode is not available if using a LEARNING key.

RAMP Function

The RAMP function offers a pre-programmed setting for launching and accelerating the PWC.

RAMP 1 provides:

– Slowest launch (smoothest)
– Slowest acceleration rate
– Slowest TARGET SPEED range.

RAMP 5 provides:

– Quickest launch
– Quickest acceleration rate
– Highest TARGET SPEED range.

TARGET SPEED Function

The TARGET SPEED function limits the maximum towing speed.

Once the RAMP has been selected, an average PWC target speed for that RAMP will be visible in the numerical display.

The average speed displayed and the speed range available is dependent on the RAMP selected. The higher the RAMP number, the higher the speed range.

The operator may increase or decrease the target speed to any value within the selected RAMP speed range.

NOTE: If the desired target speed cannot be set in the selected RAMP, you must exit then reengage SKI MODE, and select a different RAMP.

Activating and Using Ski Mode

To engage ski mode, carry out the following steps:

1. Release throttle lever.

NOTE: Ski mode cannot be engaged if the throttle lever is not fully released, and if CRUISE or SLOW SPEED mode is engaged. A message will appear in the multifunction display advising you of the situation. Follow the instructions in the display.

2. Press the MODE button repeatedly until SKI MODE is visible in the multifunction display.

smr2016-026-003

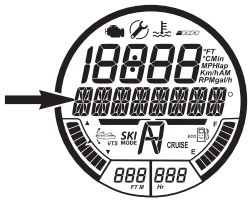

MESSAGE DISPLAYED
SKI MODE

3. Press SET to enter the function. The multifunction gauge message will change to RAMP. The RAMP setting number will be visible in the numerical display.

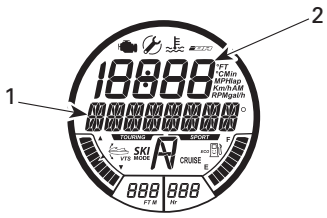

FIRST SETTING AVAILABLE - RAMP
1. RAMP message 2. Ramp setting

4. To change the RAMP setting, press the UP/DOWN button until the desired ramp number is visible in the numerical display.
5. Press SET to lock in the ramp setting; the multifunction display will change to the TARGET SPEED setting function.

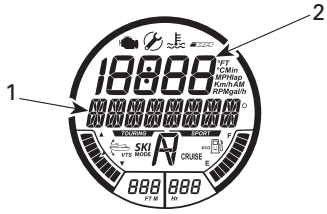

SECOND SETTING AVAILABLE - TARGET SPEED
1. TARGET SPEED message 2. Target speed setting

6. Press the UP/DOWN button to increase or decrease the target speed.
7. Press SET to lock in the target speed; the display will switch to the following scrolling message.

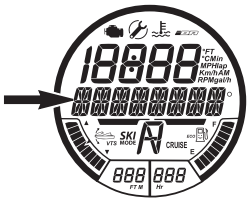

MESSAGE DISPLAYED
SKI MODE_PRESS_SET_TO START OR MODE TO EXIT

NOTE: A BEEP will be heard every 5 seconds as a SKI MODE engaged reminder.

8. Press SET again; the following confirmation message will appear.

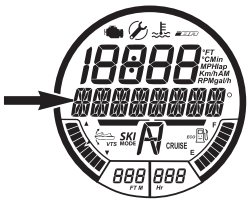

MESSAGE DISPLAYED
SKI MODE ACTIVE_PRESS_MODE_AND RETURN TO IDLE TO CANCEL

NOTE: The SKI MODE indicator will also come ON and blink when ski mode becomes active. It will be ON steady when the operator pulls and holds the throttle lever all the way in to the handlebar.

SKI MODE INDICATOR

9. To launch the PWC in ski mode, pull in and hold the throttle lever all the way to the handlebar grip. The PWC will accelerate to the set TARGET SPEED and the SKI MODE indicator will be on steady.
10. To increase or decrease the TARGET SPEED during a ski run, press the UP/DOWN button, **do not** release the throttle lever.

NOTE: If the throttle is partly released during a ski run, the SKI MODE indicator light will start to blink and the speed adjust function using the UP/DOWN arrow button will be deactivated.

11. To end a ski run or to pick up a fallen skier or wakeboarder, fully release the throttle to regain normal throttle control.

NOTE: When the throttle is fully released during ski mode operation, the system returns to ski mode engaged status. The SKI MODE indicator light will go out but, ski mode will remain engaged and a message to that effect will reappear in the multifunction display.

12. Press SET to reactivate ski mode and fully pull in the throttle lever to start another ski run.

Deactivating Ski Mode

To exit ski mode at any given point during the ski mode setting process, press the MODE button.

To end a ski run and completely deactivate ski mode, release the throttle to idle, then press the MODE button.

Learning Key Mode

There are 5 speed settings available.

By default, the speed setting is no 3.

Changing Learning Key Speed Settings

NOTE: Changing key settings is only available when the engine is not running.

To change learning key settings, carry out the following:

1. Press the START/STOP button to wake up the electrical system and install the NORMAL key on the engine cut-off switch.
2. Wait for the information center to complete its self-test and display the key recognition message.
3. Press the MODE button repeatedly until KEY MODE is visible in the digital screen of the information center.

smr2016-026-003

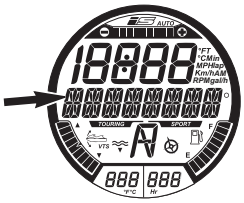

MESSAGE DISPLAYED

KEY MODE

4. Press the SET button once to enable learning key mode setting function. The display will change to L-Key.

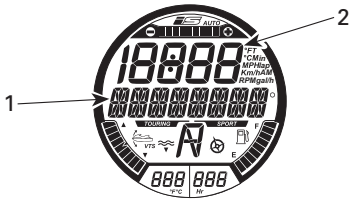

FUNCTION SELECTED - LEARNING KEY

1. L-KEY message
2. Learning key setting

5. Press the UP or DOWN button to toggle the key setting between 1 and 5. See table for speed limitations according to setting.
6. Press the SET button once to save the setting, twice to exit the function, or simply wait for the function to time-out. The change in key setting will automatically be saved.

NOTE: The key speed setting is applicable to any key of the same type used on a specific watercraft. The same key type used on a different watercraft may therefore have a different key speed setting.

D.E.S.S. KEY TYPE	KEY SPEED SETTING	APPROX. MAX. SPEED
LEARNING KEY	5	80 km/h (50 MPH)
	4	74 km/h (46 MPH)
	3	68 km/h (42 MPH)
	2	60 km/h (37 MPH)
	1	51 km/h (32 MPH)

PROCEDURES

THROTTLE ACCELERATOR SENSOR (TAS)

General

The throttle accelerator sensor (TAS) is a double hall effect sensor that sends a signal to the ECM which is proportional to the throttle lever angle.

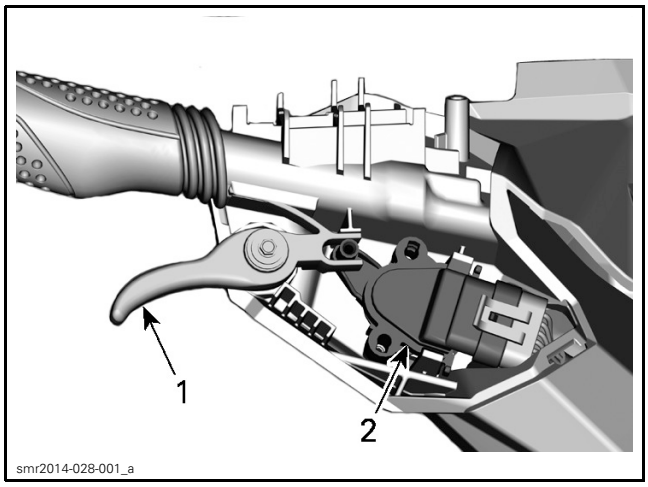

1. Throttle lever
2. Throttle accelerator sensor (TAS)

First ensure the throttle lever functions adequately. Pull the throttle lever fully in towards the handlebar, then release it. It must reach the wide open position and return to the idle position freely when released. Otherwise, refer to *STEERING SYSTEM* for an inspection.

Testing TAS Voltage

1. Disconnect the 24-pin steering connector.

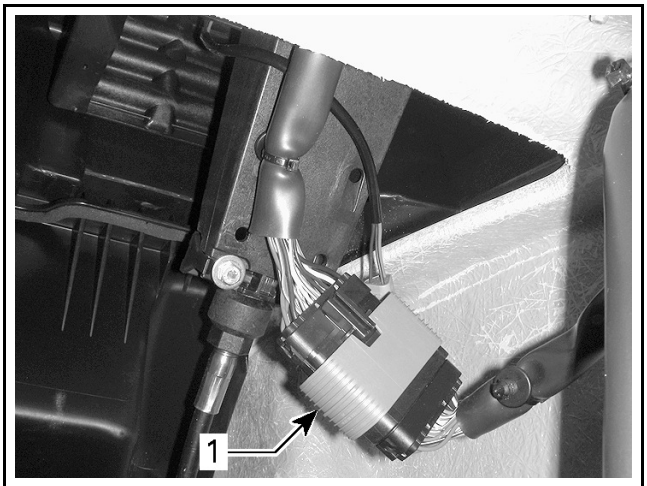

1. 24-pin connector

2. Connect the DIAGNOSTIC HARNESS (P/N 529 036 188) to make an in-line connection between the disconnected connectors.

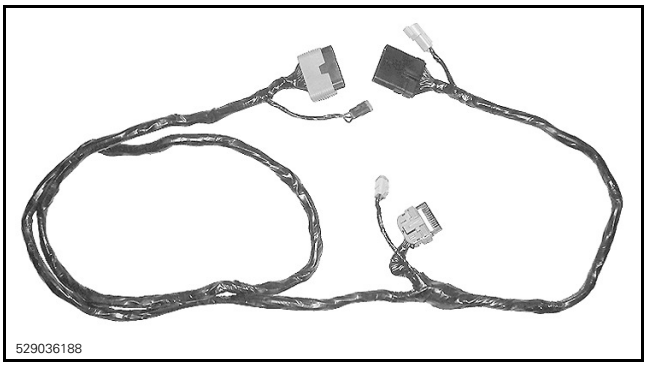

NOTE: Use only the 24 pin connectors.

3. Install the tether cord on the engine cut-off switch.
4. Briefly press the START button to wake up the ECM.
5. Measure the voltage readings on the installed diagnostic harness connector as follows. Refer to wiring diagram for details.

24-PIN CONNECTOR		IDLE POSITION	WIDE OPEN POSITION
PIN		VOLTAGE (VDC)	
9 (VI/BU)	3 (BK)	4.9 - 5.1	
3 (BK)	6 (YL/BU)	0.15 - 0.35	1.4 - 1.6
10 (VI/GN)	4 (BK)	4.9 - 5.1	
4 (BK)	7 (YL/GY)	0.4 - 0.6	2.9 - 3.1

If voltage is as per specification, the TAS sensor is functional.

If voltage is out of specification, check continuity of wires between the ECM and the sensor. If continuity is good, replace sensor.

6. Reinstall removed components.

Replacing the TAS

Refer to BRLS in iBR subsection.

CRUISE SWITCH

Testing Cruise Switch

If pressing the cruise switch does not engage the CRUISE or SLOW SPEED modes, test the cruise switch as per following procedure.

1. Connect the watercraft to the latest B.U.D.S. software. Refer to *COMMUNICATION TOOLS AND B.U.D.S.* subsection for details.
2. In B.U.D.S., click the **Monitoring** tab then the **Cluster** tab.
3. Press the cruise button on the RH handlebar and look for the **Cruise** indicator light to come on in the **Switch inputs** area.

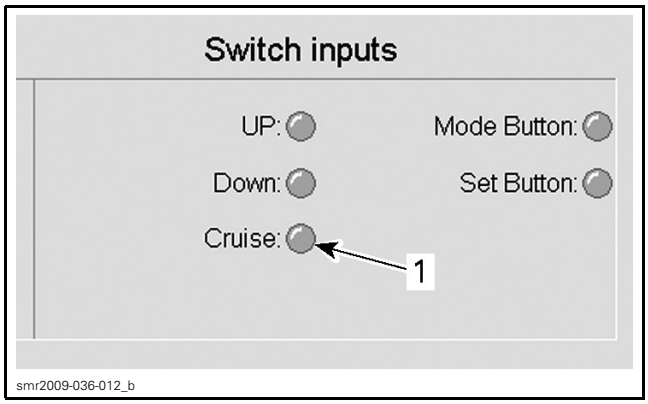

TYPICAL
1. Cruise indicator light

If the test succeeded, the switch and wiring are good and the problem may be related to the information center or ECM. Check for related fault codes. Refer to *DIAGNOSTIC AND FAULT CODES*.

If the test failed, test the switch and wiring as described in the following steps.

4. Remove the gauge support cover. Refer to *GAUGE* subsection.
5. Disconnect the gauge connector.

NOTICE **Pull connector lock out sideways. Do not twist the screwdriver.**

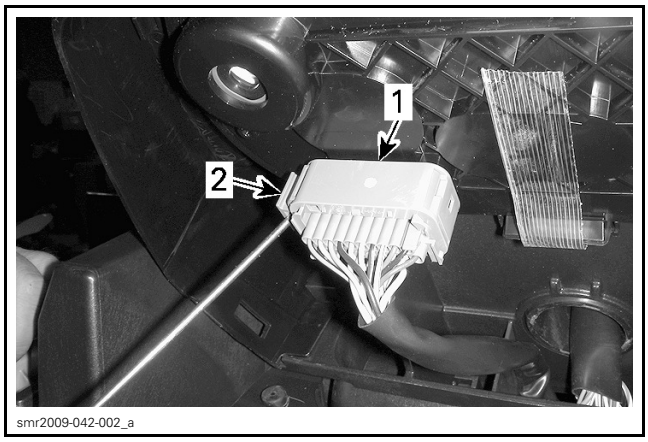

1. Gauge connector
2. Pull out to unlock connector

6. Use the FLUKE 115 MULTIMETER (P/N 529 035 868).
7. Select the Ω (ohm) function.
8. Test the cruise switch as per following table.

CRUISE SWITCH TEST			
GAUGE CONNECTOR		SWITCH POSITION	RESISTANCE
Pin 7	Pin 10	Switch released	OL
		Switch depressed	Close to 0 Ω

If the test failed, replace the cruise switch.

If the test succeeded, the problem may be internal to the information center. Try a new one.

Replacing the Cruise Switch

1. Disconnect information center connector.

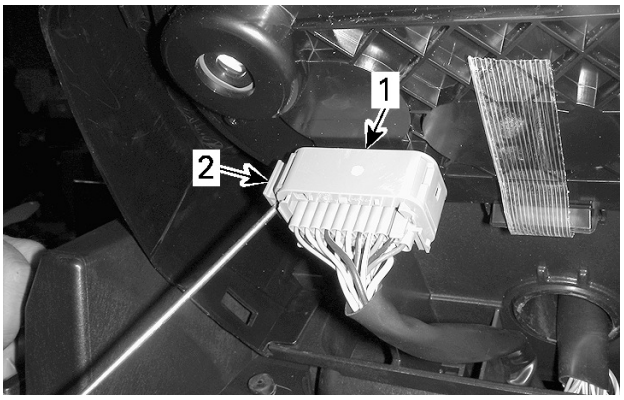

smr2009-042-002_a

1. *Gauge connector*
2. *Pull out to unlock connector*

2. Remove terminal 7 (GRAY wire) and 10 (BLACK wire) from the gauge connector.

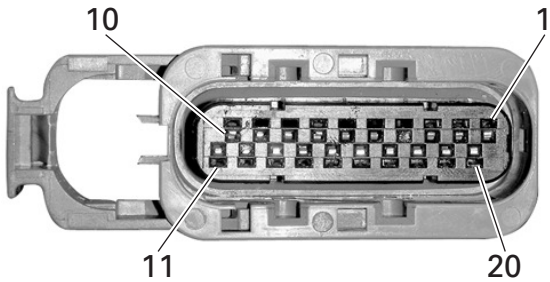

smr2009-036-003_e

GAUGE CONNECTOR PIN-OUT

3. Attach a string approximately 1.2 m (4 ft) to the end of the wires which will be used for drawing the new switch wires through the harness protective sheath.
4. Remove steering cover. Refer to *STEERING AND O.T.A.S.* subsection.
5. Remove the MODE/SET and UP/DOWN arrow switches from its support.

NOTE: It is not necessary to disconnect switches.

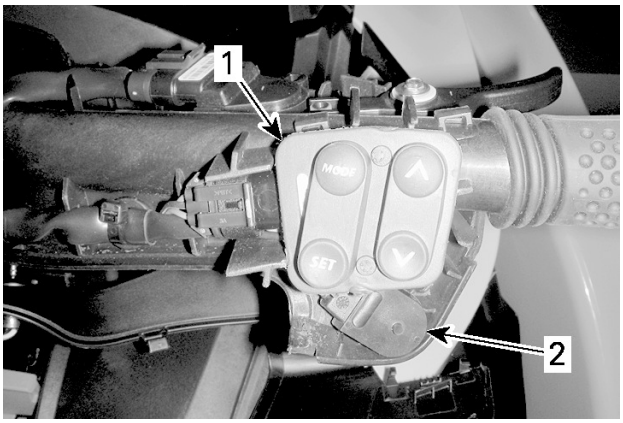

smr2009-036-013_b

1. *MODE/SET and UP/DOWN arrow switches*
2. *Cruise switch*

6. Remove the cruise switch by lifting it off its support.
7. Cut the locking ties from the harness sheath as necessary.
8. Carefully pull the wires out of the harness. Ensure the string draws through the harness sheath.
9. Tie the string to the new cruise switch wire ends and pull the new wires through the harness.
10. Install new switch terminals in the gauge connector.
11. Apply a small amount of DIELECTRIC GREASE (P/N 293 550 004) on switch terminals.
12. Reconnect gauge connector.
13. Properly insert cruise switch wiring in slot in switch support before installing MODE/SET and UP/DOWN arrow switches.

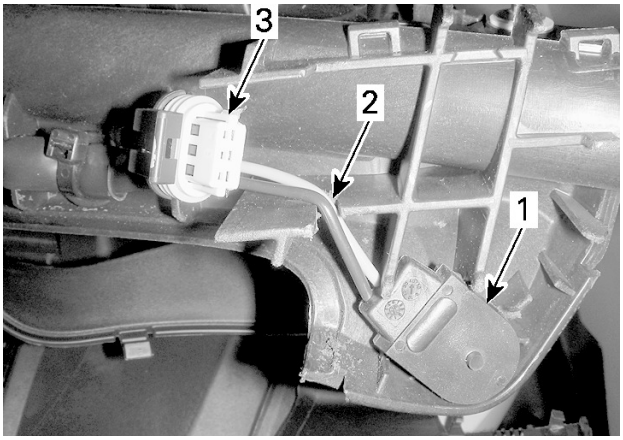

smr2009-036-014_a

SOME PARTS REMOVED FOR CLARITY
1. *Cruise switch*
2. *Wiring in slot*
3. *MODE/SET and UP/DOWN arrow switch connector*

14. Complete installation in reverse order of removal.

SPORT/ECO SWITCH

Sport/ECO Switch Overview

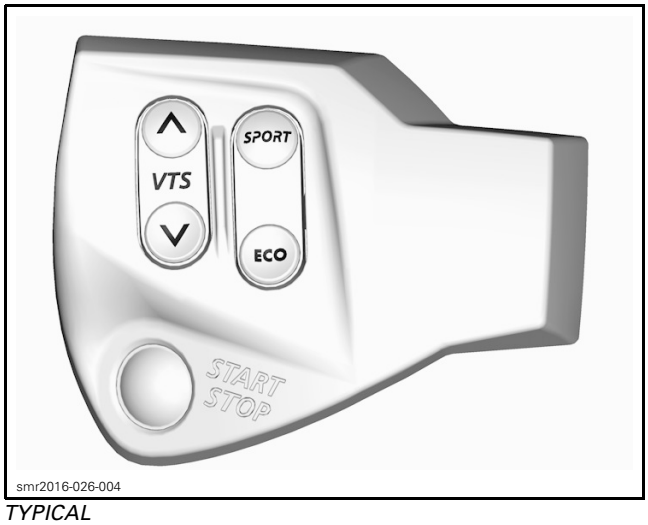

TYPICAL

The Sport/ECO switch contain a series of 4 diodes for the Sport and ECO switches.

The center wire to the switches (pin C), is common for Sport/ECO switch and VTS switch. The other two wires (pins A and B), act as signal wires for each set of switches to the gauge. They actually each form one branch of an electronic circuit within the gauge.

Each diode (in circuit) drops a nominal 0.6 Vdc when conducting electricity. If the circuit current passes through all four diodes (if the Sport/ECO switch is open), a drop of 2.4 Vdc would be measured across the 4 the diodes (pin B to pin C). This 2.4 Vdc at pin B tells the gauge the Sport/ECO switch is open.

If the Sport button is pressed, 2 diodes are bypassed. The remaining two diodes in the circuit drop 1.2 Vdc (at pin B).

If the ECO button is pressed, 1 diode is bypassed. The remaining three diodes in the circuit drop 1.8 Vdc (at pin B).

The gauge senses these voltages through pin 14 of its connector, and interprets them as signals that tell it which switch is activated.

When Sport or ECO button is pressed, a circuit within the gauge will translate it to CAN protocol and transmit it through the CAN bus. The ECM (engine control module) will react to the command and carry out the function.

NOTE: The above stated voltages vary slightly depending on the actual voltage applied to the circuit and the current flow through the diodes. When using a Fluke 115 multimeter for testing in diode test mode, the voltage and current applied by the multimeter are lower than in circuit. The quality of probe contact, the actual probes and leads, and the precision of the meter calibration will all affect the results, which will most likely be slightly lower than nominal values stated.

Testing the Sport/ECO Switch

If Sport/ECO switches do not allow the selection, test the switches as follows:

– Check the Sport/ECO switch operation using B.U.D.S. software. Refer to *COMMUNICATION TOOLS AND B.U.D.S. SOFTWARE* subsection to connect B.U.D.S.
– Check if there is any occurred or active fault code(s). If not, proceed with the following test.
– Depress the Sport button on steering and check if the **Sport** light turn on in B.U.D.S.
– Repeat with the ECO switch. **ECO** light should turn on in B.U.D.S.

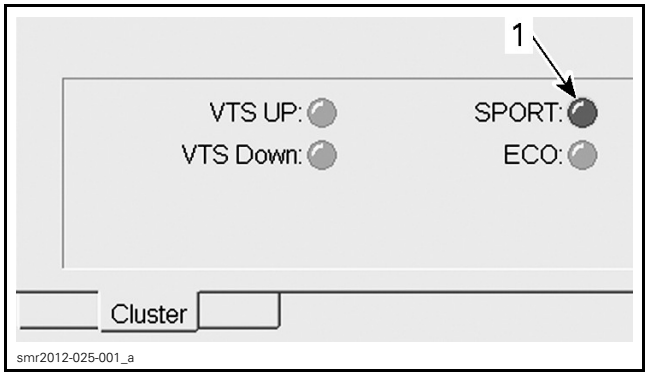

MONITORING AND CLUSTER TABS
1. Sport light

If one switch does not function, replace Sport/ECO switch.

If both switches stay off, do the following to verify the circuit.

1. Remove the gauge support cover.
2. Disconnect the gauge connector.

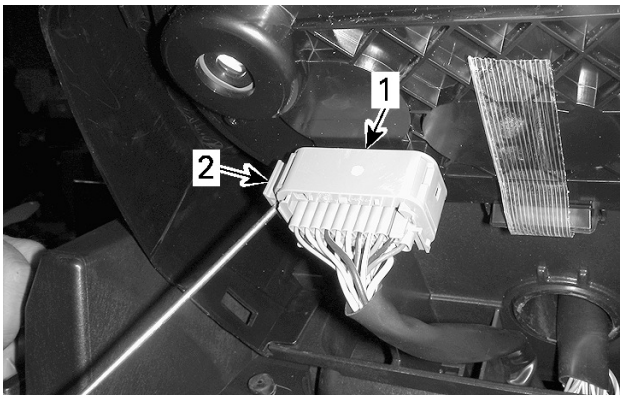

smr2009-042-002_a

1. *Gauge connector*
2. *Slide out gauge connector tab to unlock*

3. Using the FLUKE 115 MULTIMETER (P/N 529 035 868) set to the diode test function, test the Sport or ECO switches as per following tables.

NOTE: In diode test mode, the multimeter will test the voltage drop through the diodes.

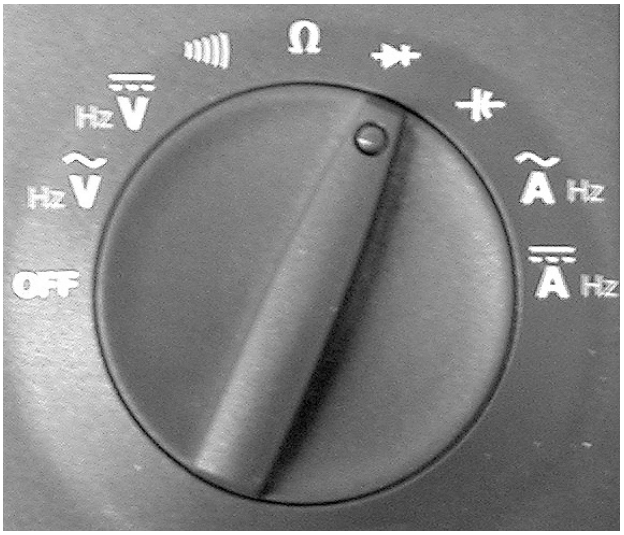

vmr2006-020-005

iS SWITCH TEST		
SWITCH POSITION	MULTIMETER LEAD/GAUGE CONNECTOR	VOLTAGE
Switch released	BLACK/WHITE lead/Pin 14 WHITE/GN lead/Pin 15	Approx. 2 Vdc
	WHITE/GN lead/Pin 14 BLACK/WHITE lead/Pin 15	OL
UP depressed	BLACK/WHITE lead/Pin 14 WHITE/GN lead/Pin 15	Approx. 1.1 Vdc
	WHITE/GN lead/Pin 14 BLACK/WHITE lead/Pin 15	OL
DOWN depressed	BLACK/WHITE lead/Pin 14 WHITE/GN lead/Pin 15	Approx. 1.6 Vdc
	WHITE/GN lead/Pin 14 BLACK/WHITE lead/Pin 15	OL

NOTE: Remember that each diode should drop approximately 0.6 Vdc when positively biassed, and read as an OL (open circuit) when negatively biassed (leads reversed).

If, when measuring between pins 14 and 15 an OL is obtained with both positive and negative diode biassing, test the wiring harness continuity between the gauge and switch assembly. If harness continuity is good, replace the switch assembly.

If any reading is significantly different than listed, carry out the same test at the switch connector, refer to the wiring diagram. If you obtain the same results, replace the switch assembly.

If voltages measured on every switch are as listed in the previous tables (or very close to it), the switches and the wiring harness are good. The fault may be within the gauge, or in the circuit or component the function applies to.

ELECTRONIC FUEL INJECTION (EFI)

SERVICE TOOLS

Description	Part Number	Page
ECM ADAPTER TOOL	529 036 166	4, 6, 16, 23, 25, 29, 32–33, 35–36
FLUKE 115 MULTIMETER	529 035 868	4–6, 15–16, 23, 25, 27, 29, 32–33, 36
FUEL HOSE DISCONNECT TOOL	529 036 037	10

SERVICE TOOLS – OTHER SUPPLIER

Description	Part Number	Page
FLUKE AUTOMOTIVE BACK PROBE PIN	TP40	27
FLUKE SUREGRIP INSULATED TEST LEADS	TL224	27

SERVICE PRODUCTS

Description	Part Number	Page
LOCTITE 243 (BLUE)	293 800 060	7, 11, 25, 28, 34, 37
LOCTITE 518	293 800 038	35

GENERAL

⚠ WARNING

Always disconnect battery prior to working on the fuel system. Always disconnect battery exactly in the specified order, BLACK (-) cable first. Electrical connections should be disconnected prior to disconnecting fuel lines.

⚠ WARNING

Fuel vapors are flammable and explosive under certain conditions. Ensure work area is well ventilated. Do not smoke or allow open flames or sparks in the vicinity.

Use B.U.D.S. software to release the fuel pressure in the system prior to disconnecting a fuel line. Refer to *FUEL TANK AND FUEL PUMP* subsection.

Cover the fuel line connection with an absorbent shop rag before disconnecting them. Slowly disconnect the fuel hose to minimize spilling.

⚠ WARNING

Fuel lines remain under pressure at all times. Always proceed with care and use appropriate safety equipment when working on a pressurized fuel system. Wear safety glasses. Do not allow fuel to spill on hot engine parts and/or on electrical connectors. Proceed with care when removing or installing high pressure test equipment, or disconnecting fuel line connections. Wipe off any fuel spillage in the bilge. Never use a hose pincher on high pressure hoses.

When the repair is completed, ensure the hose from the fuel rail to the fuel pump is properly connected and secured in its support. Test for fuel leaks as described in *FUEL TANK AND FUEL PUMP* subsection.

⚠ WARNING

Always perform the fuel system high pressure leak test if any component has been removed or disconnected.

⚠ WARNING

If a gasoline leak and/or odor is present, do not start the engine. Repair the leak.

SYSTEM DESCRIPTION

The electronic fuel injection system (EFI) is comprised of various sensors used for detecting ongoing operating conditions of the engine and watercraft, and includes all the actuators that perform the required adjustment to the engine.

This system also introduces torque management functions.

Electrical System

ECM (Electronic Control Module)

From input signals (e.g. throttle lever, iBR lever), the ECM acknowledges driver demands and converts them to an engine torque requirement through calculation of several variables. Then, the ECM controls the iTC (intelligent Throttle Control), the injection system and the ignition system to meet the torque requirement.

The ECM manages the engine torque requirements and controls engine operation to ensure it is delivering optimum performance, fuel economy and meeting emission regulations. The ECM also controls idle speed and limits maximum engine speed.

Since the ECM manages several torque requirements at the same time including contradictory demands (such as the throttle lever and the iBR lever being fully pulled in at the same time), it must prioritize the most important requirement according to predefined conditions and apply the proper action.

EFI Sensors

The ECM reads the inputs from the sensors which it compares to predetermined parameters stored in the ECM, makes computations, and activates the outputs accordingly (injectors, ignition coils etc.).

Signals from sensors are used by the ECM to determine the injection and ignition parameters (referenced to fuel and ignition maps) as required to maintain the optimum air-fuel ratio.

Air Induction

Throttle Body

A 60 mm throttle body is mounted on the intake manifold.

Air for combustion is drawn in by a mechanically-driven supercharger. The air flows through the throttle body and is controlled by a throttle plate.

Fitted on the throttle body, an electronic throttle actuator (ETA) allows the ECM to electronically control the throttle plate opening which regulates the amount of air that enters the engine, and therefore engine speed.

There is no idle air control valve (IACV).

Fuel System

Fuel Rail

A single fuel rail is mounted on the intake manifold. The fuel rail ensures that enough fuel can be delivered to the fuel injectors throughout the engine operating range.

The fuel rail is fed by the fuel pump. The fuel pressure applied to the fuel rail is regulated by the fuel pressure regulator located in the fuel pump module.

Fuel Injectors

One injector per cylinder is used to inject fuel into the intake ports of the cylinder head.

Fuel Pump

An electric fuel pump with an integrated pressure regulator is used. Refer to *FUEL TANK AND FUEL PUMP* subsection.

ADJUSTMENT

IDLE SPEED

Idle speed is not adjustable. The ECM controls the idle speed of the engine through the iTC system by controlling throttle plate opening using the ETA (electronic throttle actuator).

Idle speed can be monitored in B.U.D.S.

CLOSED THROTTLE RESET

General Information

This operation performs a reset of the TPS values of the throttle body in the ECM.

Closed throttle reset must be carried out only when:

– Replacing the throttle body.
– Replacing the ECM.

Closed Throttle Reset Procedure

1. Use the B.U.D.S. software to perform this setting. Refer to *COMMUNICATION TOOLS AND B.U.D.S.* subsection.
2. Press the START button to wake up the ECM.

3. Install the tether cord on the engine cut-off switch.
4. Ensure throttle lever is completely released.
5. In B.U.D.S., click the ECM **Setting** tab, then click on the **Reset** button.

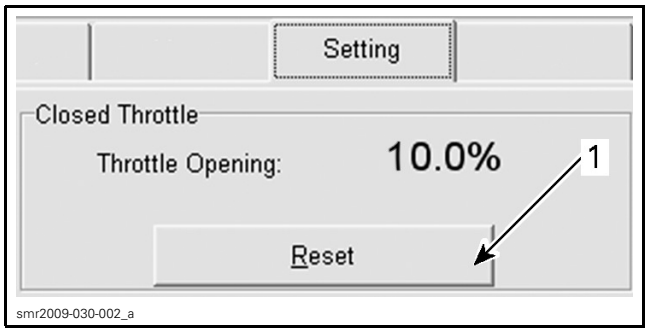

ECM SETTING PAGE IN B.U.D.S.
1. Click Reset button

The following message will confirm the operation.

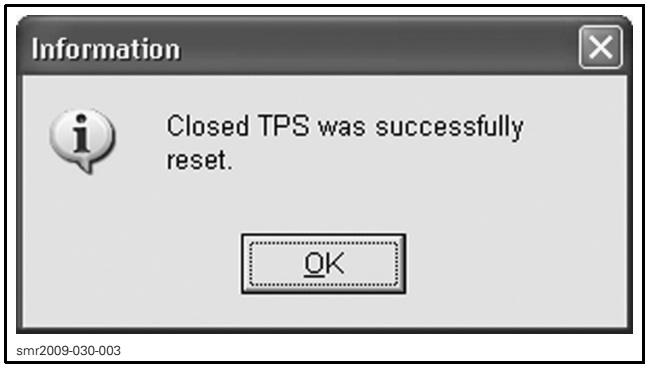

Reset is completed.

NOTE: It is not necessary to click on the Write button in B.U.D.S.

Exit B.U.D.S.

NOTE: If the throttle valve was not within the allowed range when the **Closed Throttle** reset was carried out, no error message would be displayed. However, a fault code would be set when the engine is started.

6. Start engine and make sure it operates normally through its full engine RPM range.
7. Check for fault codes using B.U.D.S. If a fault code related to the throttle actuator appears, clear it, then carry out another **Closed Throttle** reset procedure. To clear faults, refer to *DIAGNOSTIC AND FAULT CODES* subsection.

TROUBLESHOOTING

DIAGNOSTIC TIPS

Engine problems are not necessarily related to the fuel injection system.

It is important to ensure that the engine/propulsion system, fuel delivery and electrical systems are functioning normally.

For diagnostics purposes, use B.U.D.S. software. See *COMMUNICATION TOOLS AND B.U.D.S.* subsection.

After a problem has been solved, be sure to clear the fault(s) in the ECM using the B.U.D.S. software.

⚠ WARNING

All electrical actuators and electronic modules are powered as soon as the START button is pressed. Always disconnect the battery prior to disconnecting any electrical or electronic parts.

Never use a battery charger to temporarily substitute the battery as it may cause the ECM to function erratically, or not at all.

Check related-circuit fuse solidity and condition with an ohmmeter. A visual inspection could lead to a false diagnosis.

Electrical Related Problems

It is important to check the following in the electrical system:

– Battery voltage
– Fuses
– Bus bar condition in fuse box
– Ground connections
– Wiring and connectors.

Ensure that all electronic components are genuine OEM. Any modification to the wiring harness may lead to poor system operation or generate fault codes.

Electrical Connections

Pay particular attention to ensure that terminals and pins are not out of their connectors, corroded, or out of shape.

When probing terminals, pay attention not to deform the terminals as this could cause a loose or intermittent connection that would be difficult to troubleshoot.

PROCEDURES

ENGINE CONTROL MODULE (ECM)

CAN Continuity Tests

If a communication problem is present, perform the appropriate continuity test relating to the component reported by, or not available in B.U.D.S.

Test wire continuity between the corresponding terminal of the CAN bus bar in the fuse box and the suspected component as follows.

For fuse is covered in *POWER DISTRIBUTION AND GROUNDS* subsection.

Remove both CAN bus bars.

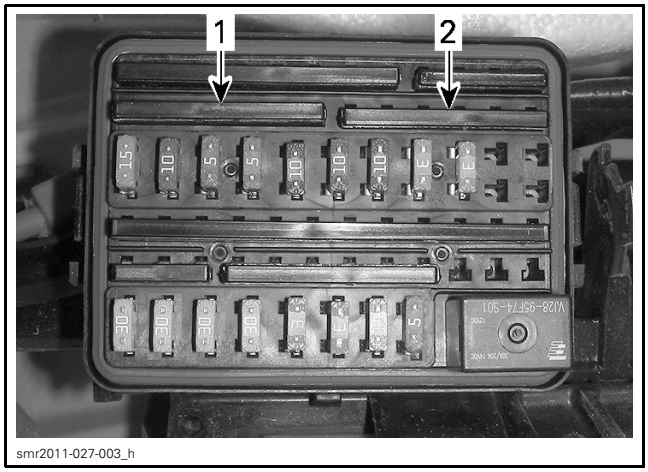

1. *CAN LO bus bar*
2. *CAN HI bus bar*

Inspect bus bar condition.

Disconnect the connector from the component to be tested. Refer to its appropriate subsection.

Use the FLUKE 115 MULTIMETER (P/N 529 035 868) and select Ω.

Refer to the *CAN BUS DIAGRAM* above and read wire resistance between the each bus bar terminal and the applicable component terminal. Check the continuity of the WHITE/RED wire and the continuity of the WHITE/BLACK wire.

The following gives an example between the CAN LO wire and the ECM.

NOTE: When working with the ECM, install the ECM ADAPTER TOOL (P/N 529 036 166) on ECM "B" connector. For connector identification, refer to *ECM CONNECTOR IDENTIFICATION* in this subsection.

CONTINUITY TEST EXAMPLE: ECM TO FUSE BOX		
ECM CONNECTOR	FUSE BOX TERMINAL	RESISTANCE
B-C2	G1	Close to 0 Ω (continuity)

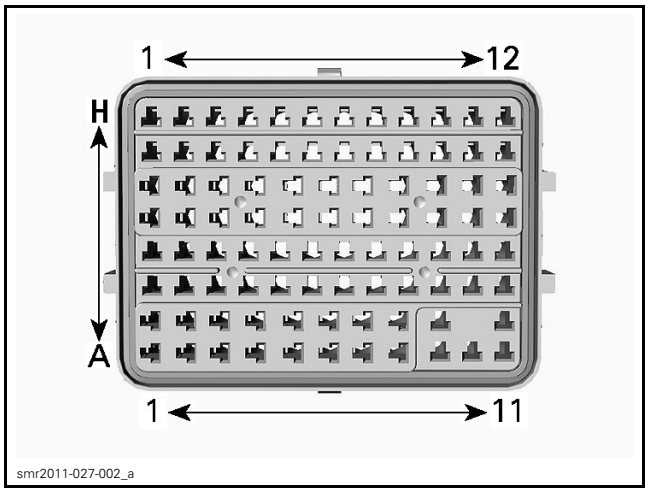

FUSE BOX PIN IDENTIFICATION

If continuity is good, CAN wires are in good condition.

If continuity is not good, check wiring, connectors and terminals condition.

NOTE: It may be necessary to check the continuity to more than one component.

Reconnect connectors and reinstall removed parts.

ECM Location

The ECM is located above the valve cover.

ECM Connector Identification

There are 2 connectors connected to the ECM.

The engine harness female connector is connected to the ECM module male connector "A".

The vehicle system control harness female connector is connected to the ECM module male connector "B".

The ECM connectors have 48 pins.

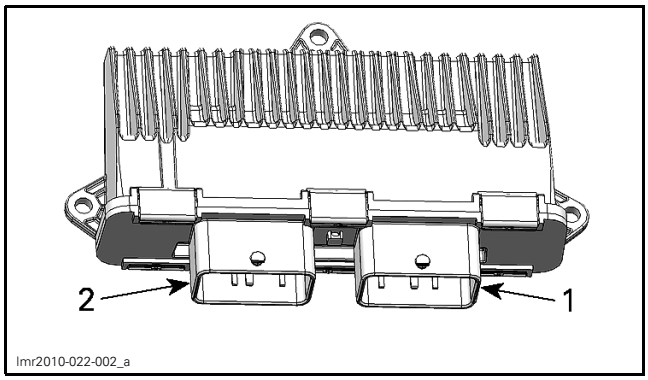

ECM CONNECTOR IDENTIFICATION
1. Connector A
2. Connector B

NOTE: For connector information, cleaning and probing, refer to *WIRING DIAGRAM* subsection.

ECM Wake Up Validation

Press the START button.

NOTE: Do not install the tether cord.

QUICK INDICATION THAT ECM IS POWERED (assuming the observed component is working)
Information center turns on.
Fuel pump turns on for approximately 5 seconds.

NOTE: Since the tether cord is not installed, the information center will turn off a few s econds after the self-test, but the ECM and electrical system will stay powered for approximately 3 minutes longer.

If the ECM does not turn on, check the following:
- Fuses F8, F19 and F3 in fuse box
- Battery voltage. Refer to *CHARGING SYSTEM*
- The 12 Vdc power bus bars in fuse box
- The ground bus bar in fuse box
- Relay and wiring. Refer to *POWER DISTRIBUTION*
- ECM power supply wires and ground wires. See following procedure.

ECM Wake Up Logic

With Tether Cord Installed

When the START button is pressed to start engine:
- ECM pin B-D1 receives current from battery via the START switch. ECM is woken up.
- ECM pin B-H2 provides a ground to the relay coil in fuse box.
- The relay contacts close and provides main 12 Vdc power to the ECM at pin B-M4.
- The relay also powers the other components in the electrical system.
- ECM pin B-E4 monitors for a tether cord installed on the engine cut-off switch.
- When a tether cord is installed, the magnet in the tether cord cap closes the reed switches in the engine cut-off switch and the ECM pin B-F2 provides a ground. This tells the ECM the tether cord is installed.
- ECM pin B-B2 reads the D.E.S.S. key in the tether cap and determines if it is valid. If so, the engine can be started.

Without a Tether Cord Installed

When the START button is pressed:
- The information center turns on, goes through the self-test function, displays applicable messages and turns off a few seconds later.
- The engine cannot be cranked.
- The ECM stays powered up until it removes the ground to the relay coil after 3 minutes (pin B-H2).
- Relay contacts open and power to the ECM is removed.
- Power is also removed on all other electrical systems except the GPS supply to the information center.

ECM Shut Down Logic

When the engine is stopped by using the STOP button or by removing the tether cord from the engine cut-off switch, the following occurs:
- ECM stops the engine.
- After 5 seconds, the information center turns off.
- After 60 seconds, ECM (pin B-H2) removes the ground to the relay coil.
- Relay contacts open and power to the ECM is removed.
- Power is also removed on all other electrical systems except the GPS supply to the information center.

Testing ECM Power Supply

1. Remove cover from fuse box. Refer to *POWER DISTRIBUTION* subsection.
2. Press the START button to wake up the ECM.

NOTE: Do not install the tether cord.

3. Use the FLUKE 115 MULTIMETER (P/N 529 035 868) and select Vdc.
4. Probe fuse F19 as illustrated.

NOTE: This will validate the fuse at the same time.

FUSE BOX	BATTERY POST	VOLTAGE
Fuse F19 terminal at F1	Ground	Battery voltage
Fuse F19 terminal at E1		

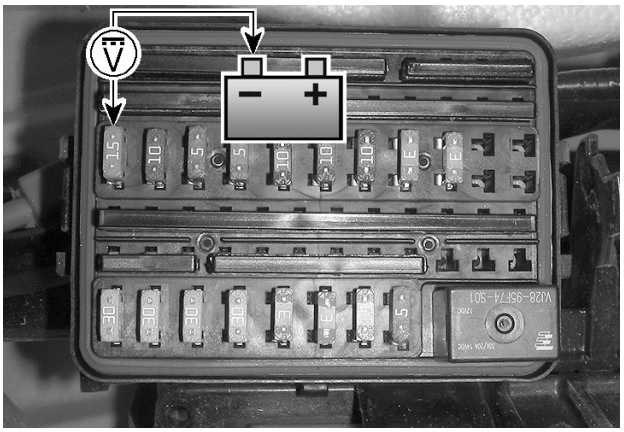
smr2011-027-003_i

If battery voltage is measured at E1 but not at F1, replace the fuse.

If voltage is not measured at E1, check the wiring and connections between the relay output and F19 output. Refer to *WIRING DIAGRAM*.

If voltage is as per specification, carry out the *CONTINUITY TEST OF ECM POWER CIRCUIT*.

Testing Continuity of ECM Power Circuit

1. Wait for electrical power to go off (approximately 3 minutes).
2. Disconnect "B" connector from ECM.
3. Install ECM ADAPTER TOOL (P/N 529 036 166) on ECM connector.

smr2009-030-010

4. Use the FLUKE 115 MULTIMETER (P/N 529 035 868) and select Ω.
5. Probe terminals as per following table.

FUSE BOX	ECM ADAPTER	RESISTANCE
Terminal F1	Pin B-M4	Close to 0 Ω

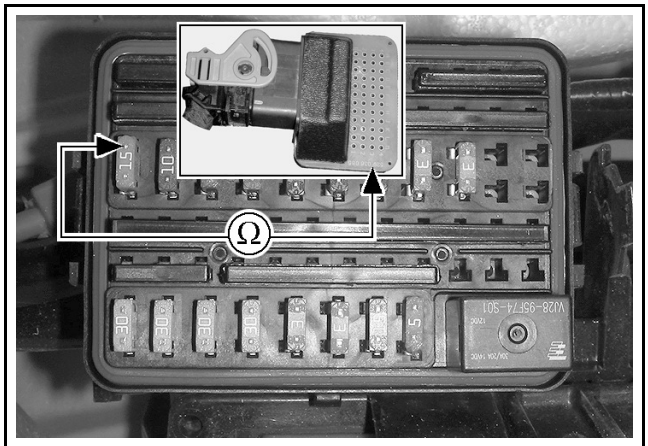
smr2011-027-003_J

If an open circuit is measured, repair or replace wiring and connectors.

If the ECM power circuit tests good, the problem may be one of the following:

– Start switch circuit open to ECM, refer to *STARTING SYSTEM* subsection.
– ECM not providing a ground to relay in fuse box, refer to *POWER DISTRIBUTION* subsection.
– ECM ground wire open circuit, refer to *CONTINUITY TEST OF ECM GROUND CIRCUITS* in this subsection.
– ECM internal problem.

Testing Continuity of ECM Ground Circuits

1. Disconnect "B" connector from ECM.
2. Install ECM ADAPTER TOOL (P/N 529 036 166) on ECM connector.
3. Use the FLUKE 115 MULTIMETER (P/N 529 035 868) and select Ω.
4. Probe adapter terminals as per following table.

ECM ADAPTER	BATTERY POST	RESISTANCE
Pins B-L1, B-M2 and B-M3	Ground	Close to 0 Ω (continuity)

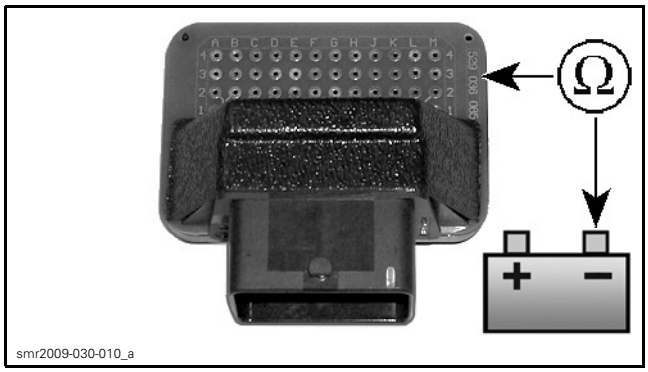

If measurement is out of specification, check ground bus bar in fuse box and continuity of its wires and connections with the engine grounds. Also check battery ground and engine grounds. Refer to *POWER DISTRIBUTION AND GROUNDS*.

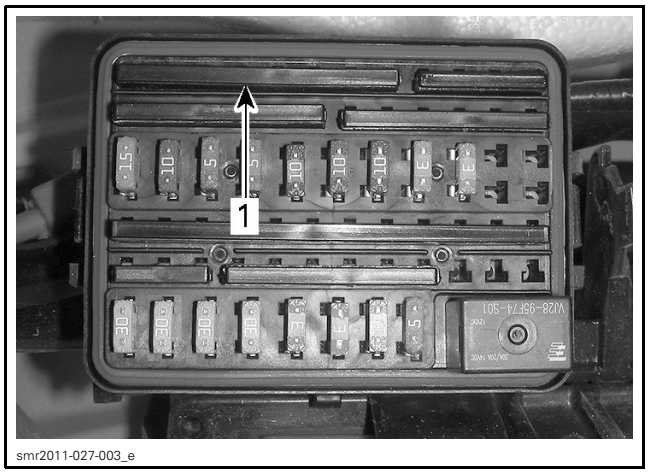

TYPICAL
1. Ground bus bar in fuse box

If everything tests good and ECM does not power up, try a new ECM. Refer to *ECM REPLACEMENT*.

Removing the ECM

NOTE: If a new ECM is to be installed, first read the procedures in *ECM REPLACEMENT* in this subsection.

1. Disconnect battery cables.

⚠ WARNING

Always disconnect the BLACK negative (–) battery cable first, then disconnect RED positive (+) cable.

2. Disconnect both ECM connectors from ECM.
3. Unscrew all retaining screws and remove the engine ECM from its support on the intake manifold.

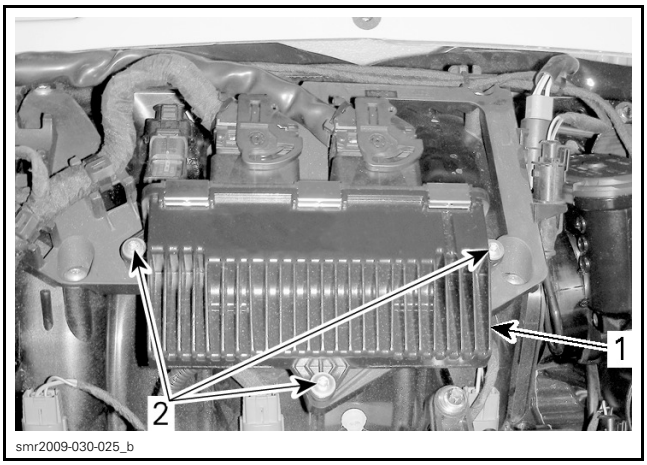

1. ECM
2. Retaining screws

Installing the ECM

Reverse removal procedure however, pay attention to the following.

1. Install ECM.

TIGHTENING TORQUE	
Service product	LOCTITE 243 (BLUE) (P/N 293 800 060)
ECM retaining screws	5.5 N•m ± 0.6 N•m (49 lbf•**in** ± 5 lbf•**in**)

NOTICE **Always replace ECM by the same part number or by a BRP approved equivalent.**

2. Reconnect ECM connectors.
3. Reconnect battery cables.

⚠ WARNING

Always reconnect the RED positive (+) battery cable first, then reconnect BLACK negative (–) cable.

4. If a new ECM is installed, refer to *ECM REPLACEMENT* in this subsection.

ECM Replacement

Prior to replacing a suspected ECM, ensure that all the recommendations in the general introduction of this section have been followed.

When installing a new ECM, data must be entered and a reset is required.

ECM Manual Data Entry

There are 2 possible methods to collect the required information. The 1st being the easiest:

1. Use B.U.D.S. software and obtain the data from a saved **.mpem** file on your PC computer.
2. Collect the information from the vehicle and BOSSWeb.

1st Collecting Method: Obtaining the Data from a Saved .mpem File

1. Use the B.U.D.S. software.

NOTE: It is not necessary to perform any connection. The PC computer can be used alone.

2. In B.U.D.S., click on the **Open** button.

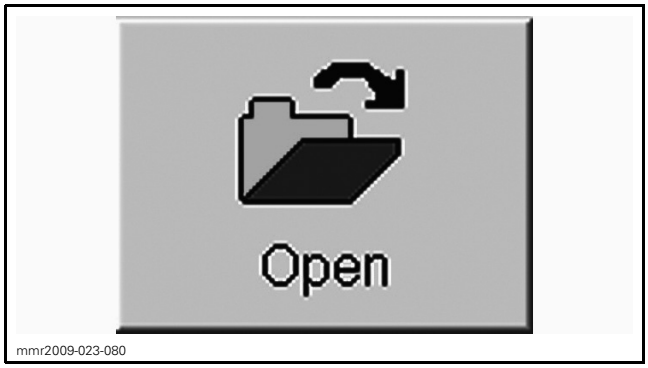

mmr2009-023-080

3. Click once on the **Folder Up** button in the **Open** box.

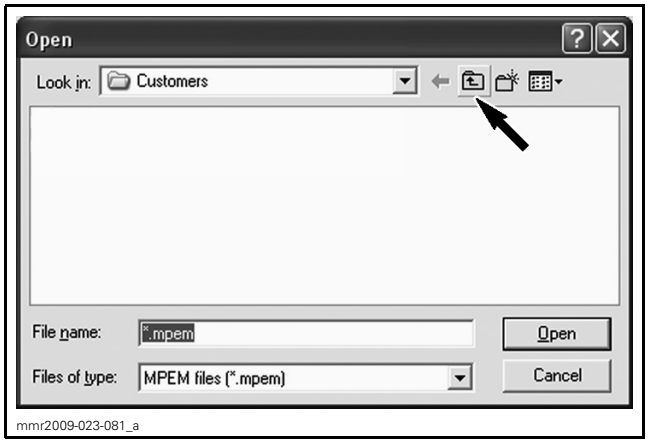

mmr2009-023-081_a

Double click on the **AutoSave** folder.

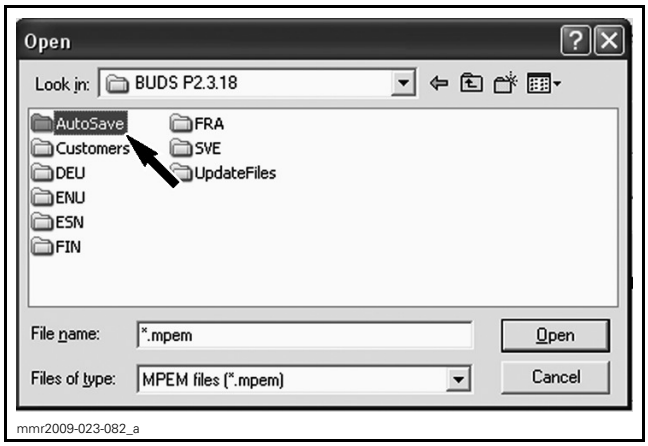

mmr2009-023-082_a

NOTE: You may have to go to another **AutoSave** folder from a previous version of B.U.D.S.

4. Choose the latest file saved for this specific vehicle.

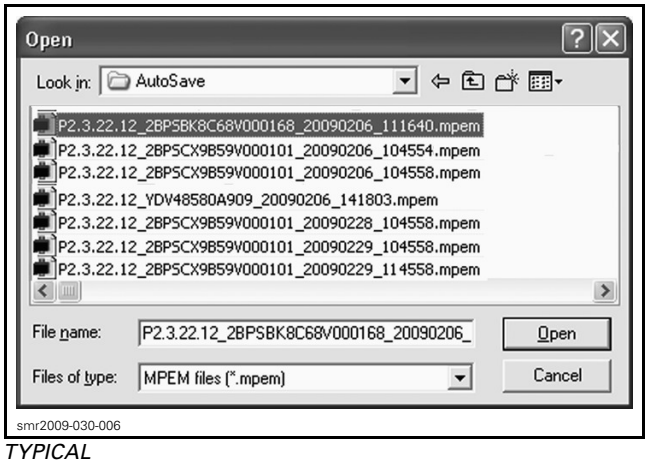

smr2009-030-006

TYPICAL

IMPORTANT: Be sure to use the file that specifically matches the vehicle you are servicing.

NOTE: The file name structure is as follows:
BUDS version_VIN_date read (yyyymmdd)_hour read (hhmmss).mpem
Example: **P2.3.22.12_2BPSBK8C68V000168_20090206_111640.mpem** Hence: B.U.D.S. version: P2.3.22.12 VIN: 2BPSBK8C68V000168 Date: 2009 02 06 Hour: 11h 16m 40s

5. Go in the **Vehicle** tab and record the following information.
   1. Vehicle serial number
   2. Engine serial number (without the leading "M")

3. Vehicle model number
4. Customer name.

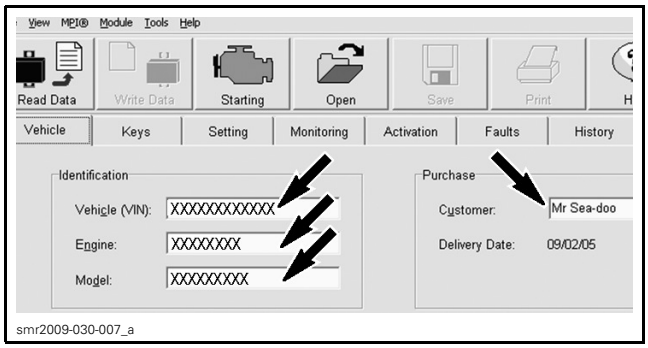

VEHICLE TAB

6. Enter recorded data in ECM as detailed in *ENTERING THE COLLECTED INFORMATION INTO THE ECM*.

2nd Collecting Method: Collect the Information from the Vehicle andKnowledge Center

1. Record engine serial number.

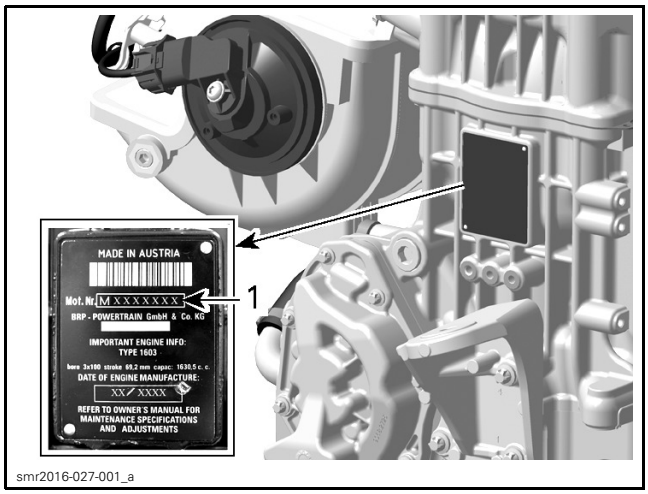

1. Engine serial number

2. Record the following numbers using *KNOWLEDGE CENTER*, enter the unit's serial # in the search..
   1. Vehicle model number
   2. Customer name.
3. Enter the recorded data in the new ECM as detailed in *ENTERING THE COLLECTED INFORMATION INTO THE ECM*.

Entering the Collected Information into the ECM

1. Use the latest applicable B.U.D.S. software. Refer to *COMMUNICATION TOOLS AND B.U.D.S.* subsection.
2. Press the START button to wake up the ECM.
3. Install the tether cord on the engine cut-off switch.
4. In B.U.D.S., click the **Read Data** button to read the new ECM.

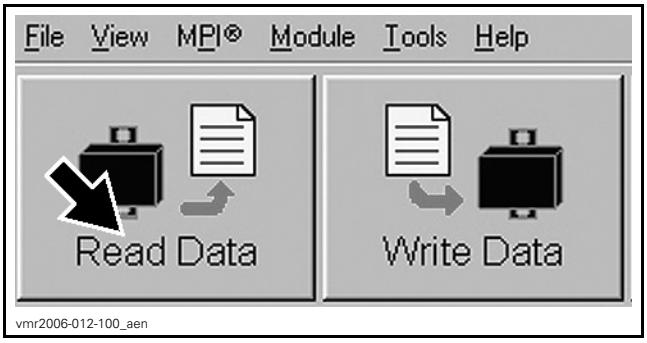

The following window will pop up.

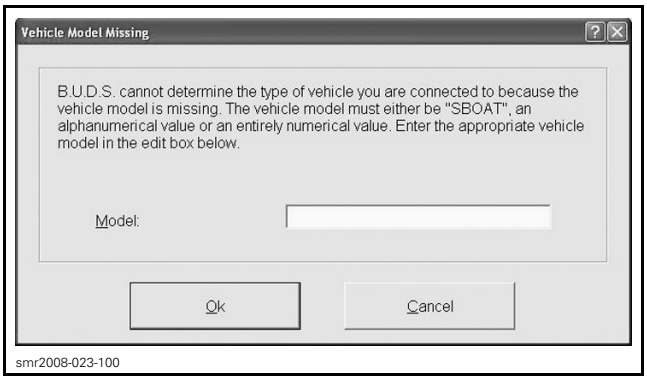

5. Enter the vehicle model number.

NOTICE **Do not enter SBOAT for a PWC. Enter only the appropriate model number as obtained when gathering the information.**

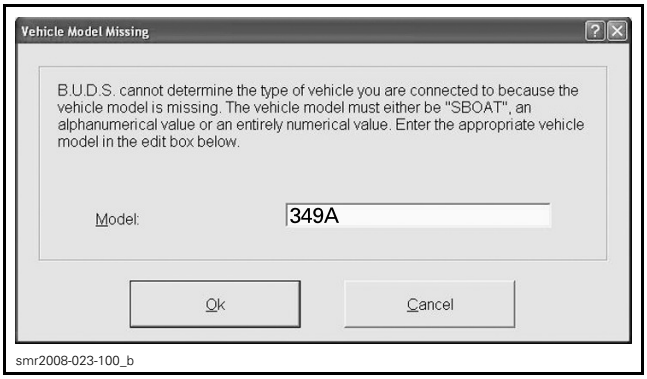

TYPICAL

6. Click the **Vehicle** tab and enter the information you recorded previously.
   1. Vehicle serial number
   2. Engine number (**do not** enter the "M" at the beginning of the engine number)
   3. Customer name.

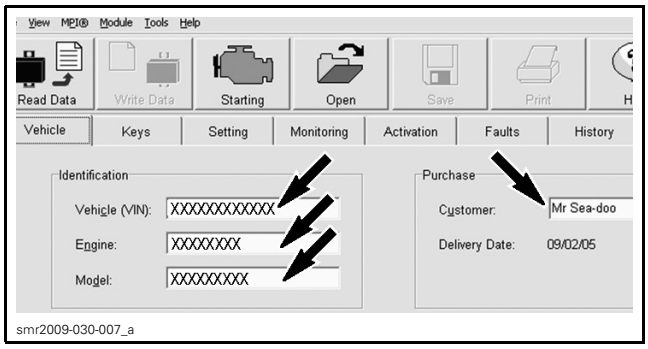

VEHICLE TAB

7. Click on the following tabs:
   - **History**
   - **Part Replacement**
   - **Add Part in History**.
8. Enter the **old** ECM serial number in the **Add Part In History** window.

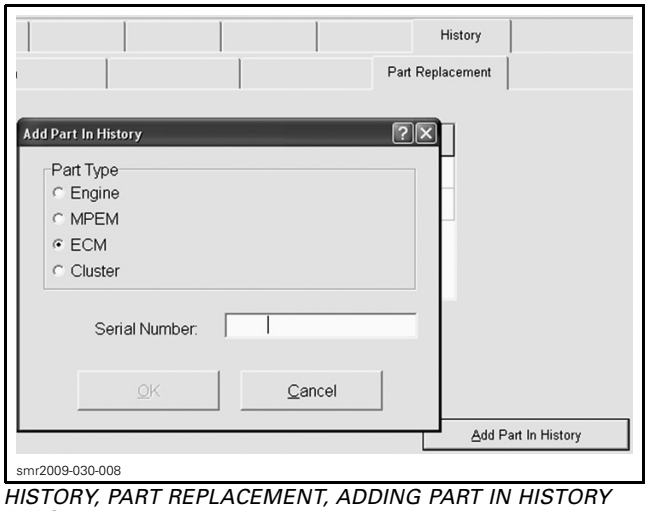

HISTORY, PART REPLACEMENT, ADDING PART IN HISTORY TABS

NOTE: The ECM serial number can be found on the ECM sticker that also identifies the part number.

9. Click the **Keys** tab and click on the **Erase All Keys** button.

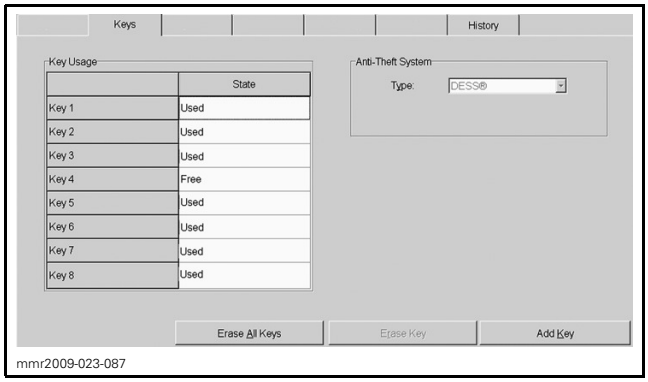

10. Program the desired D.E.S.S. key(s) to the watercraft. Refer to *D.E.S.S. SYSTEM* subsection.

NOTE: If you do not program at least one D.E.S.S. key to the watercraft, you will not be able to write the data to the new ECM, and will be prompted to do so.

11. Briefly press the vehicle START button to wake up the ECM. **Engine must not crank.**
12. Click on the **Write Data** button.

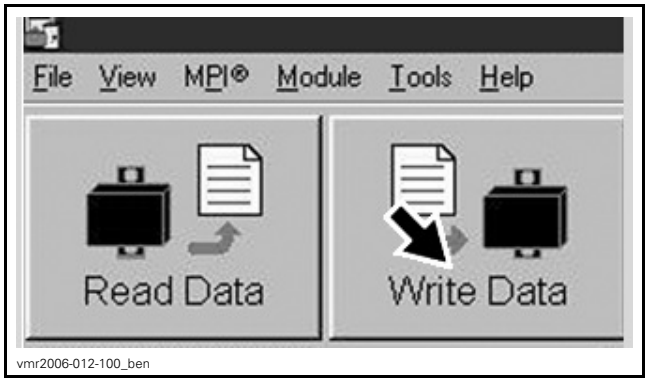

13. Perform the **Closed throttle** reset. Refer to **Closed Throttle Reset (TPS)** in *ADJUSTMENTS* in this subsection.
14. Reinstall remaining removed parts.

FUEL RAIL

Fuel Rail Location

Fuel rail is located above intake manifold.

Removing the Fuel Rail

Fuel Rail Hose Disconnection

1. Release fuel pressure. Refer to *FUEL PUMP* in *FUEL TANK AND FUEL PUMP* subsection.
2. Place an absorbent shop rag under the fuel supply hose fitting at the fuel rail to catch any fuel leakage.
3. Disconnect fuel hose from fuel rail.

REQUIRED TOOL	
FUEL HOSE DISCONNECT TOOL (P/N 529 036 037)	

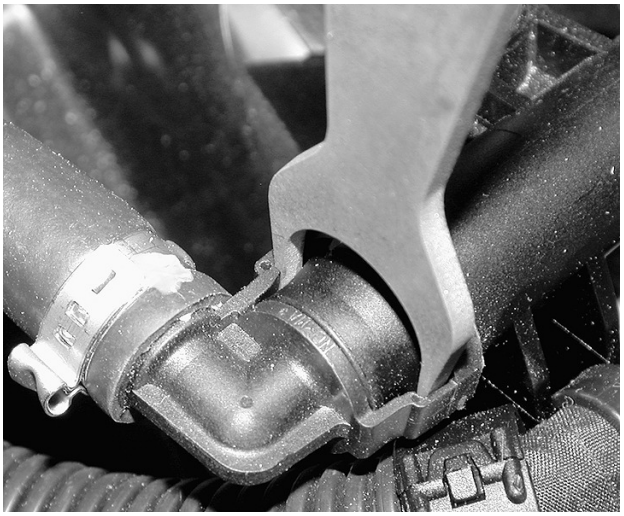

lmr2006-008-010

NOTE: It may be necessary to rotate fuel hose fitting to align the tool ends with the openings of the locking mechanism.

Removing the Fuel Rail

1. Cut locking ties retaining engine harness to fuel rail.

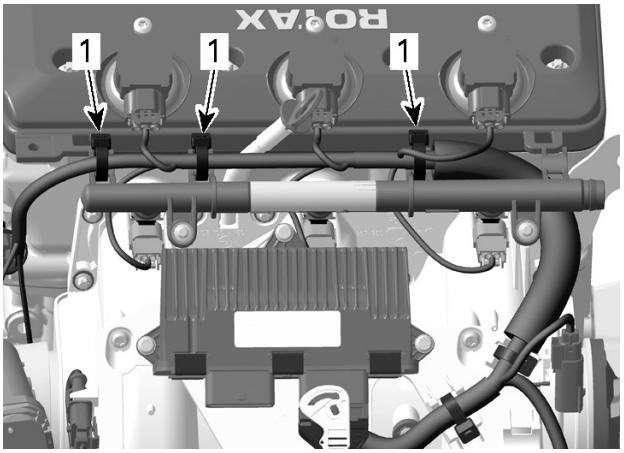

smr2016-027-002_a

1. Cut locking ties

2. Remove screws retaining the fuel rail.

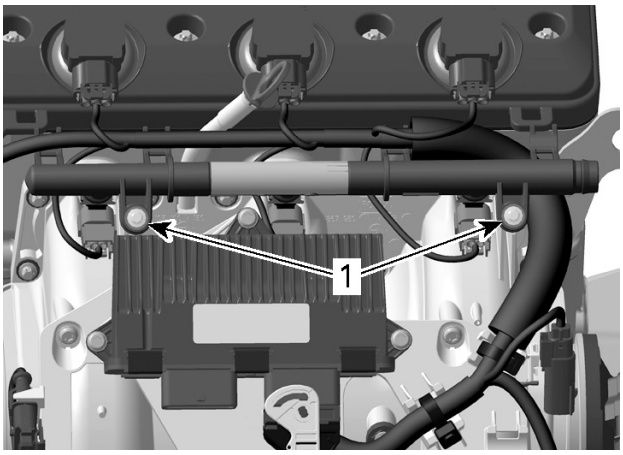

smr2016-027-003_a

1. Retaining screws

3. Gently pull fuel rail side to side (wiggle).

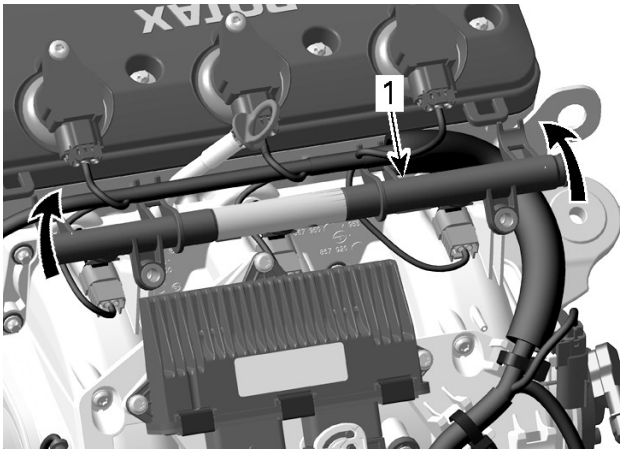

smr2016-027-004_a

1. Fuel rail

4. Disconnect all injector connectors.
5. Pull fuel rail out with fuel injectors.

Installing the Fuel Rail

Reverse the removal procedure. However, pay attention to the following.

1. Install fuel rail with injectors.

Lubricate O-rings of fuel injectors.

FUEL INJECTOR O-RINGS	
Service product	Engine oil

2. Tighten fuel rail retaining screws to specification.

TIGHTENING TORQUE	
Service product	LOCTITE 243 (BLUE) (P/N 293 800 060)
Fuel rail retaining screws	9 N•m ± 1 N•m (80 lbf•**in** ± 9 lbf•**in**)

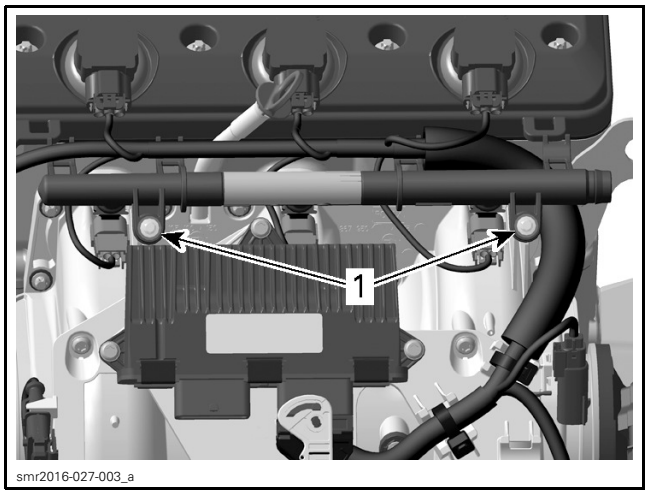

1. Retaining screws

3. Properly install new locking ties to secure engine harness to fuel rail.

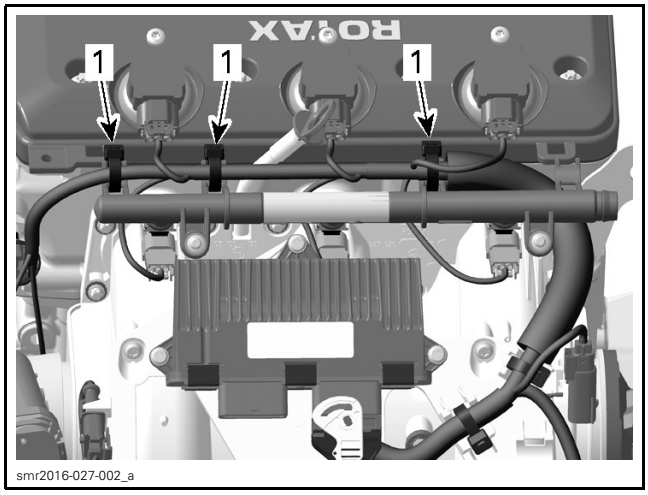

1. New locking ties

Fuel Rail Hose Connection

1. Apply engine oil on O-rings of fitting.

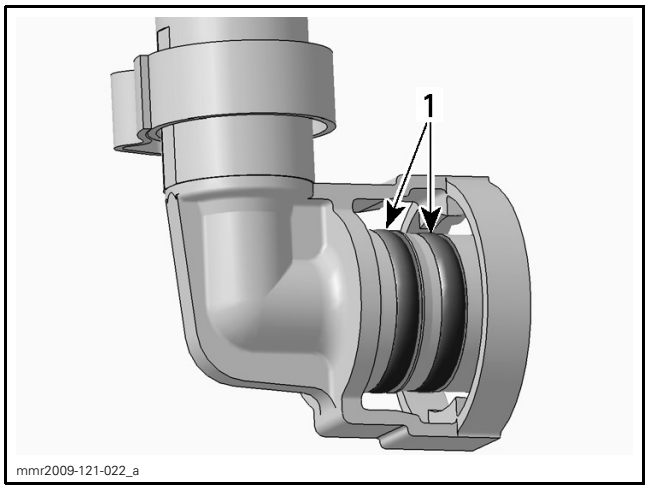

1. Apply oil on O-rings

2. Connect fuel hose to fuel rail.

IMPORTANT: Push fuel hose fitting on fuel rail until you hear a "click". Try pulling fuel hose off fuel rail to ensure fitting is properly locked.

3. Pressurize the fuel system and check for a fuel leak. Refer to *FUEL TANK AND FUEL PUMP* subsection.

⚠ WARNING

Failure to pressurize the fuel system may result in severe injury or a life threatening situation should a leak occur.

4. Reinstall all remaining removed parts.

FUEL INJECTOR

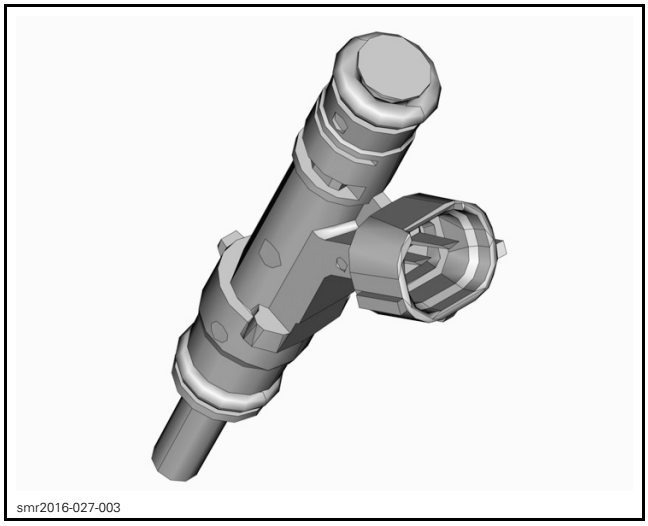

Testing the Fuel Injector Operation with B.U.D.S. (Dynamic)

1. Connect watercraft to B.U.D.S. software. Refer to *COMMUNICATION TOOLS AND B.U.D.S.*
2. Start engine.
3. In B.U.D.S., click the following:
   - **Read Data** button
   - **Monitoring** tab.
4. Using the B.U.D.S. software, shut down each engine cylinder one at a time by clicking on the button under the applicable cylinder.

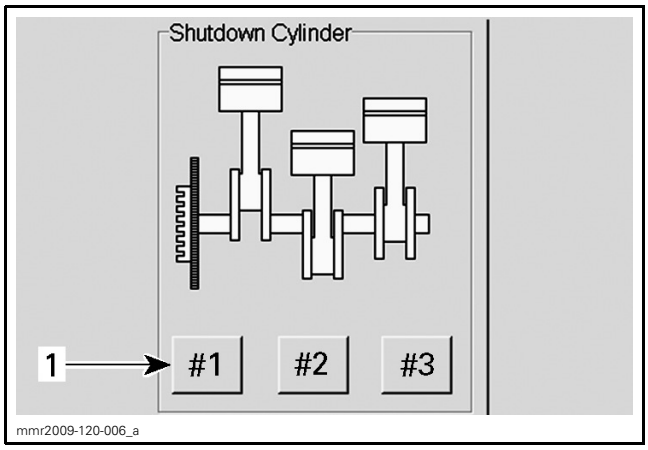

MONITORING AND ECM TABS
1. Click on cylinder number to be tested

If the engine RPM drops when clicking on a cylinder, the injector and the ignition of this cylinder are functioning normally.

If the engine RPM does not drop when clicking on a cylinder, this cylinder is not functioning properly. Check the following:

– Fuel injector operation. Refer to *TESTING THE FUEL INJECTOR OPERATION* in this subsection.
– Spark plug and ignition coil. Refer to *IGNITION SYSTEM* subsection.
– Engine condition.

Testing the Fuel Injector Operation with B.U.D.S. (Static)

NOTICE **After fuel injector activation using B.U.D.S., always crank engine in drowned mode to ventilate engine and prevent a potential backfire due to fuel accumulation in the engine.**

1. Connect watercraft to B.U.D.S. software. Refer to *COMMUNICATION TOOLS AND B.U.D.S.*
2. Press the START button to wake up the ECM.
3. Install the tether cord on the engine cut-off switch.
4. In B.U.D.S., click the following:
   – **Read Data** button
   – **Activation** tab.
5. On the ECM Activation page, energize the fuel injector to be tested by clicking on it in B.U.D.S.

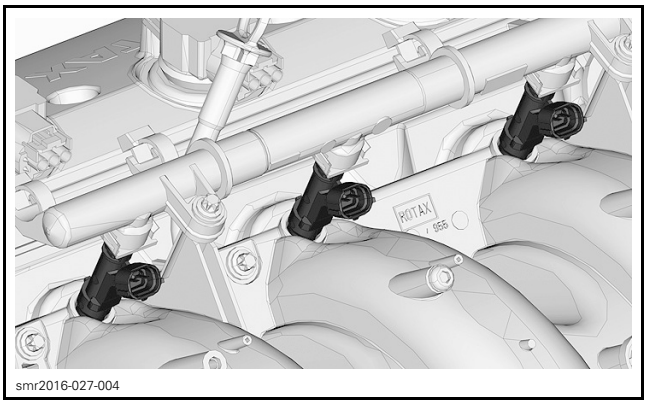

ACTIVATION AND ECM TABS

6. Listen to the injector.

If you can hear the injector, it validates its operation. Carry out *TESTING THE FUEL INJECTOR BALANCE*.

If you do not hear the injector, carry out *TESTING THE INJECTOR INPUT VOLTAGE*.

Testing the Fuel Injector Balance with B.U.D.S.

NOTICE **After fuel injector activation using B.U.D.S., always crank engine in drowned mode to ventilate engine and prevent a potential backfire due to fuel accumulation in engine.**

1. Install a fuel pressure gauge as described in *FUEL TANK AND FUEL PUMP* subsection.
2. Connect watercraft to B.U.D.S. software. Refer to *COMMUNICATION TOOLS AND B.U.D.S.*
3. Press the START button to wake up the ECM.
4. Install tether cord on engine cut-off switch.
5. In B.U.D.S., click the following:
   – **Read Data** button
   – **Activation** tab.
6. In B.U.D.S., click the **Fuel Pump** button to activate fuel pump.

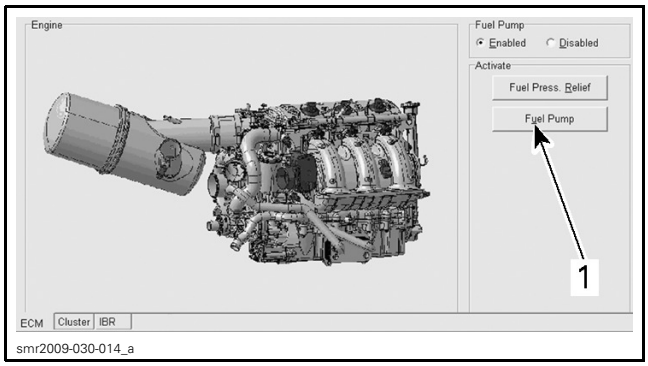

TYPICAL ACTIVATION AND ECM TABS
1. **Fuel Pump** *activation button*

7. Fuel pressure must be within specification. Refer to *FUEL TANK AND FUEL PUMP* subsection. Re-activate fuel pump as necessary.
8. In B.U.D.S., energize fuel injector **no. 1**.

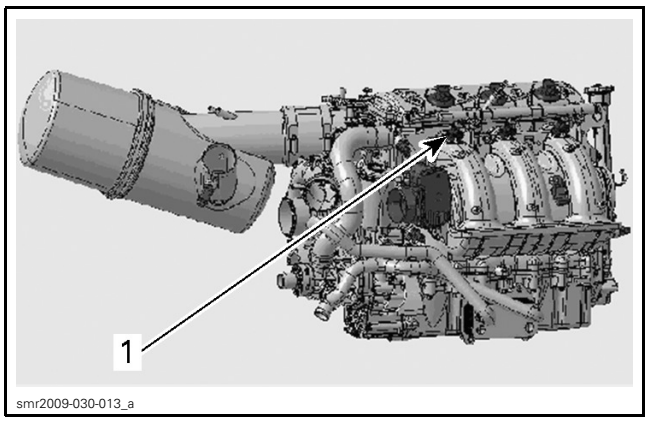

TYPICAL ACTIVATION AND ECM TABS
1. Injector of cylinder no. 1 shown

9. Record the fuel pressure drop for injector **no. 1**.
10. In B.U.D.S., click the **Fuel Pump** button to activate fuel pump.

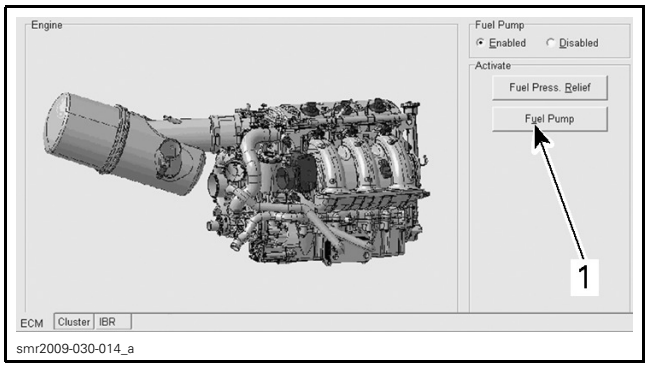

ACTIVATION AND ECM TABS
1. Fuel pump

11. Repeat the procedure for fuel injectors **no. 2** and **no. 3** and record the pressure drop for each injector.
12. The maximum fuel pressure drop between injectors should not exceed the following specification:

MAXIMUM FUEL PRESSURE DROP ALLOWED BETWEEN FUEL INJECTORS
10 kPa (1.5 PSI)

If pressure drop of any fuel injector is greater than the specification, replace that injector then repeat the test.

13. Using the valve on the fuel pressure gauge, release the pressure in the system (if so equipped).
14. Remove fuel pressure gauge and reinstall removed parts.

Testing the Fuel Injector Input Voltage

1. Open/remove seat.

Models with Suspension

2. Remove rear ventilation box. Refer to *BODY*.

All Models

3. Remove ECM from its support.
4. Disconnect fuel injector connectors.

NOTE: Push against tab underneath connector as illustrated to unlock it.

PUSH HERE TO UNLOCK

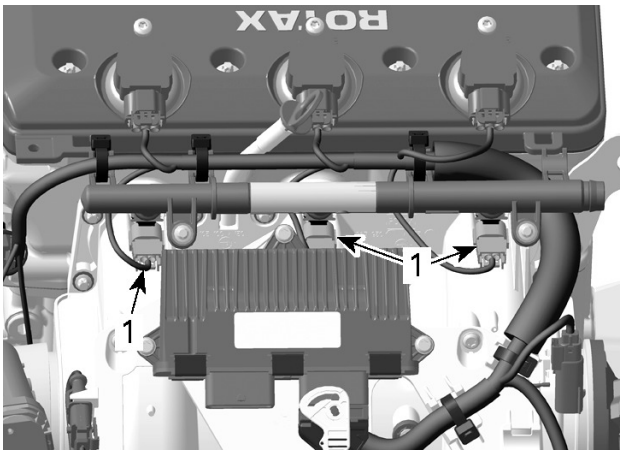

smr2016-027-002_b

1. Fuel injector connectors

5. Press the START button to wake up the ECM.
6. Install tether cord on engine cut-off switch.
7. Read input voltage to the applicable injector as per following table.

Set multimeter to Vdc.

REQUIRED TOOL	
FLUKE 115 MULTIMETER (P/N 529 035 868)	

PROBE INJECTOR CONNECTOR	MEASUREMENT
VIOLET wire with a tracer to battery ground	Battery voltage

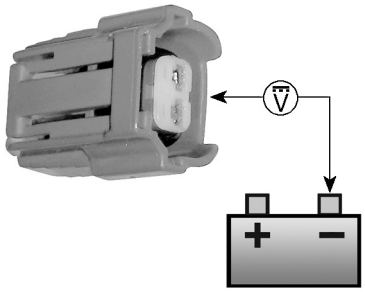

smr2009-030-029_a

If battery voltage is measured, carry out *TESTING THE INJECTOR CONTROL CIRCUIT*.

If battery voltage is not measured, check continuity between fuse box and injector as follows.

Testing the Continuity of Injector Power Circuit

1. Remove cover of fuse box. Refer to *POWER DISTRIBUTION* subsection.
2. Remove the long bus bar.

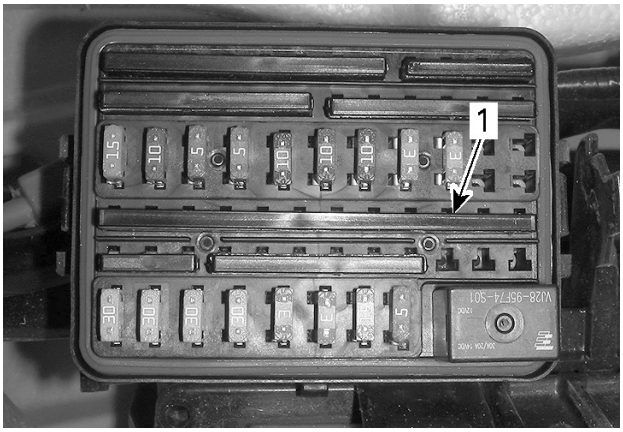

smr2011-027-003_L

TYPICAL
1. Long bus bar

3. Read resistance of the applicable injector circuit as per following table.

Set multimeter to Ω.

REQUIRED TOOL	
FLUKE 115 MULTIMETER (P/N 529 035 868)	

INJECTOR	INJECTOR CONNECTOR	FUSE BOX	MEASUREMENT
1 (rear)	VIOLET wire with a tracer	Terminal F7	Close to 0 Ω
2		Terminal F6	
3		Terminal F5	

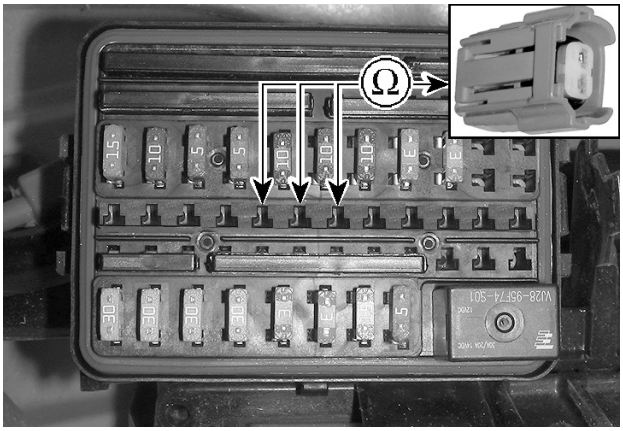

smr2011-027-003_m

If continuity is good, the fuse, wiring and connectors are functional.

If continuity is not obtained, first check the fuse and replace as required.

4. If fuse is good, repair/replace wiring and connectors from fuse box to injector. Refer to *WIRING DIAGRAM* subsection.
5. Reinstall bus bar and cover.

Testing the Fuel Injector Control Circuit

1. Disconnect ECM-A connector.
2. Probe terminals as per following table.

REQUIRED TOOL	
ECM ADAPTER TOOL (P/N 529 036 166)	
FLUKE 115 MULTIMETER (P/N 529 035 868)	

Install ECM connector on ECM adapter.

Set multimeter to Ω.

INJECTOR	ECM ADAPTER	INJECTOR	MEASUREMENT
1 (rear)	Pin A-B3	BROWN wire with a tracer	Close to 0 Ω
2	Pin A-K1		
3	Pin A-J1		

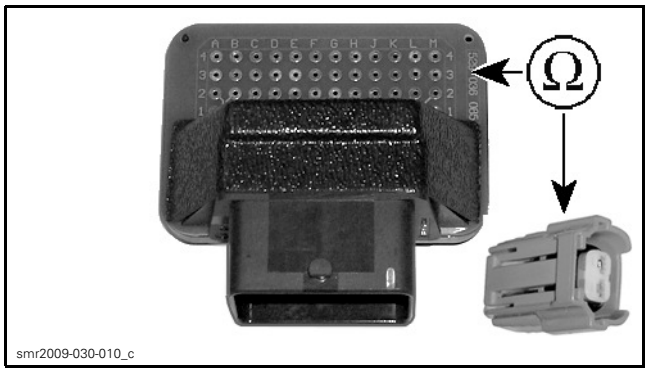

smr2009-030-010_c

If control circuit is at fault, repair or replace wiring and connectors.

If control circuit and all tests applicable to the injector are good, try a new ECM. Refer to *ECM*.

Testing the Fuel Injector Resistance (at ECM Connector)

1. **Reconnect** the injector connector.
2. Disconnect the ECM-A connector.
3. Remove the long bus bar from fuse box.

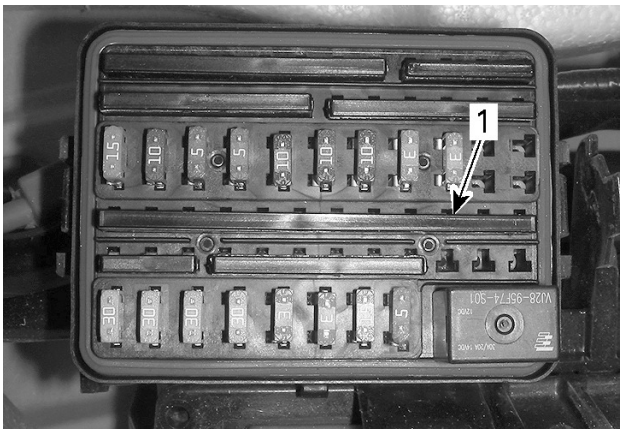

smr2011-027-003_L

TYPICAL
1. Long bus bar

4. Measure resistance value between terminals as follows.

REQUIRED TOOL	
ECM ADAPTER TOOL (P/N 529 036 166)	
FLUKE 115 MULTIMETER (P/N 529 035 868)	

Install ECM connector on ECM adapter.

Set multimeter to Ω.

INJECTOR	FUSE BOX TERMINAL	ECM ADAPTER PIN	RESISTANCE @ 20°C (68°F)
1	F7	A-B3	11.4 - 12.6 Ω
2	F6	A-K1	
3	F5	A-J1	

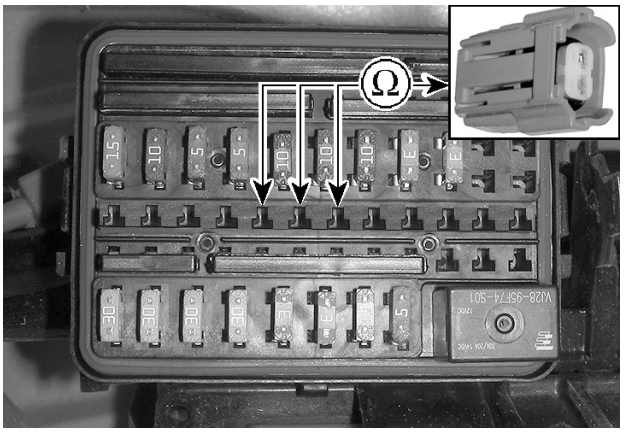

smr2011-027-003_m

If resistance values are as specified, injector coil is in good condition.

If resistance value are not as specified, repeat test at injector connector.

5. Reinstall bus bar and fuse box cover.

Testing the Fuel Injector Resistance (at Component)

1. Remove injector connector.
2. Check resistance value between injector pins as per followings table.

INJECTOR PIN		RESISTANCE @ 20°C (68°F)
1	2	11.4 - 12.6 Ω

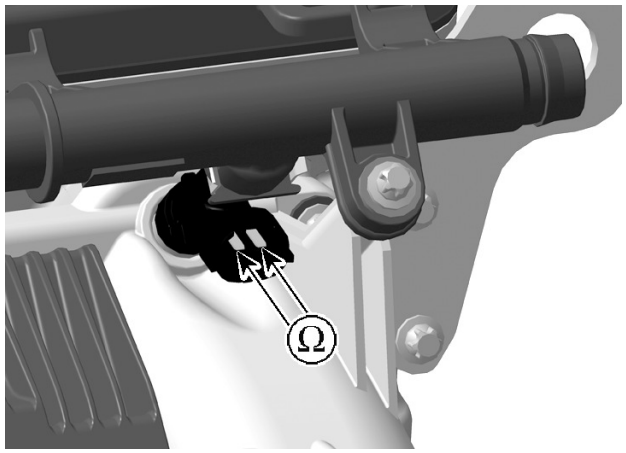

smr2016-027-005_a

If readings are not as specified, replace injector.

If readings are as specified, repair or replace wiring and connectors from ECM to injector.

Removing the Fuel Injector

1. Remove fuel rail. Refer to *FUEL RAIL* in this subsection.
2. Remove the injector clip.

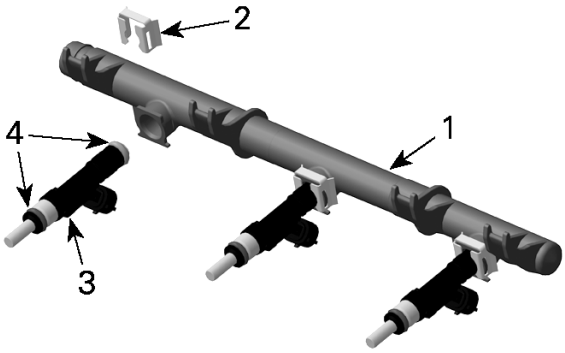

smr2016-027-006_a

FUEL RAIL ASSEMBLY
1. Fuel rail
2. Injector clip
3. Fuel injector
4. O-rings

3. Pull the fuel injector out of the fuel rail.

Installing the Fuel Injector

Installation is the reverse of the removal procedure. However, pay attention to the following details.

FUEL INJECTOR IDENTIFICATION	
ENGINE	INJECTOR COLOR CODE
1603	Yellow green

1. If you reinstall a used injector replace O-rings with **NEW** ones.
2. Apply a thin film of engine oil to O-rings.
3. Insert the fuel injector in the fuel rail.
4. Secure injector to fuel rail with a retaining clip.
5. Install fuel rail on engine. Refer to *FUEL RAIL* in this subsection.
6. Pressurize the fuel system and check for a fuel leak. Refer to *FUEL TANK AND FUEL PUMP* subsection.

⚠ WARNING

Always carry out a fuel system high pressure leak test after working on the fuel system.

7. Reinstall all remaining removed parts, refer to applicable subsections.

THROTTLE BODY

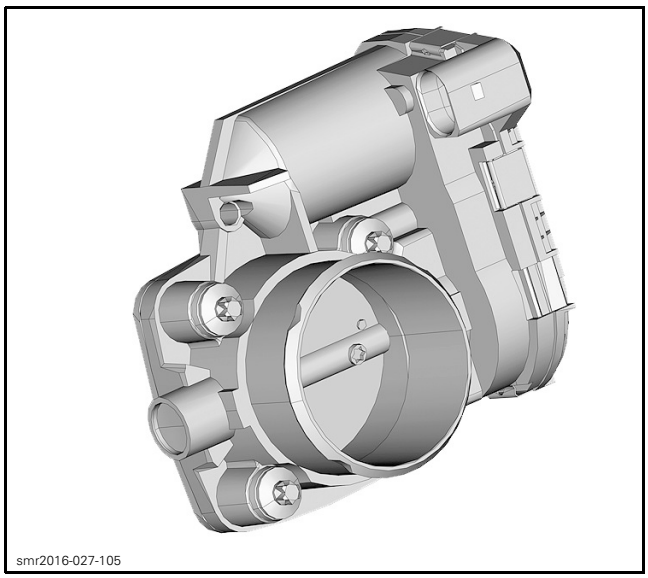
smr2016-027-105

Throttle Body Description

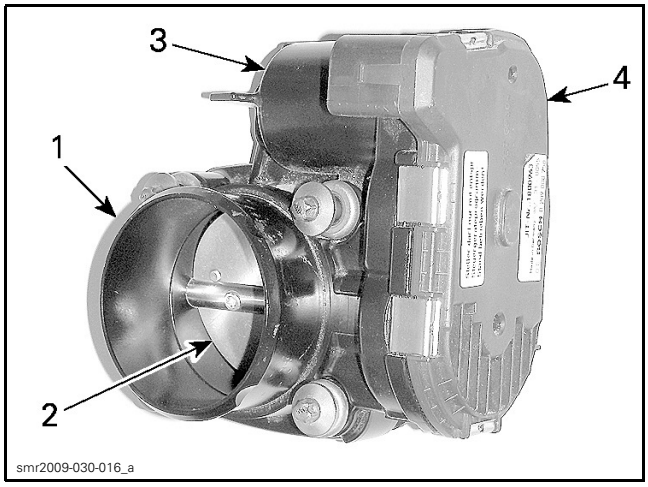

smr2009-030-016_a

1. *Throttle body*
2. *Throttle plate*
3. *Throttle actuator (electric motor inside)*
4. *Throttle position sensor (TPS) (inside)*

Electronic Throttle Actuator (ETA)

The electronic throttle actuator (ETA) is a DC motor on the throttle body that regulates the throttle plate via a drive gear. Pulse width modulation (PWM) is used to control the motor.

Throttle Plate Operating Positions

Two torsional springs are connected to the throttle plate. A main spring and another one in a plunger mechanism.

When there is no power to the throttle actuator (ETA), the plunger mechanism maintains the throttle plate at a rest position. This also serves as the limp home position.

When the throttle plate is opened by the ETA as commanded by the ECM, it acts against the main spring. If the ETA failed, the return spring would bring the throttle plate back to the limp home position.

ECM	ENGINE	THROTTLE BODY
OFF	Stopped	Throttle actuator: Off. Throttle plate: Rest position, maintained opened at approximately 8° (1). This is also the limp home position.
ON	Not started	Throttle actuator: On. Throttle plate: Moves from the rest position to approximately 14°. It then moves back to the rest position. This is the diagnostic mode where the rest position, actuator opening force to overcome the return springs and the motor return rate are monitored. If any of these parameters are out of range, a fault code is initiated.
ON	Started. Normal operation at idle	Throttle actuator: On. Throttle plate: Moves from the rest position to idle position (approximately 1-3°) according to ECM injection and ignition maps. Throttle plate is opened and closed as necessary to control the idle speed.
ON	Started. Normal operation at various RPM	Throttle actuator: On. Throttle plate: Opens and closes according to ECM torque management priorities.

(1) Degree values are given from the fully closed position.

Throttle-Body Faults and Effects

NOTE: Among other things, a weak or broken spring and a sticky throttle plate (carbon build-up, dried salt water etc) are validated by the throttle body diagnostic mode.

FAULT	EFFECT
Partial failure of TAS sensor (one internal sensor only)	Limp home mode. Engine speed limited to idle. ECM will use the remaining TAS sensor. Fault code set and beeper activated to emit warning signals. Check engine light is turned ON. Driveability could be reset by releasing and reapplying the throttle.
Complete failure of TAS sensor (both internal sensors)	Limp home mode. Engine speed limited to 2500 RPM. Fault code set and beeper activated to emit warning signals. Check engine light is turned ON.
Any throttle body failure	Limp home mode. Engine speed limited to 2500 RPM. Engine speed can still be increased up to 3200 RPM using the throttle lever. Fault code set and beeper activated to emit warning signals. Check engine light is turned ON.
NOTE: When one of these faults is active, O.T.A.S. and iBR will continue to monitor their input signals. However, since the engine speed is limited, the O.T.A.S. will not be activated. Also, since the ECM cannot control the throttle body, the iBR may produce a fault since the ECM does not react to its specific torque requests. It all depends on the circumstances when the iBR is applied. (vehicle and engine speed will be a factor).	

Lubricating the Throttle Body

No lubrication is required.

Testing the ETA

Testing the Throttle Body Actuator (ETA) with B.U.D.S.

NOTE: Use the **Setting** page, to confirm ETA movement. The **Monitoring** page will not read the actual ETA movement.

1. Enable electrical system.
2. Connect vehicle to the latest B.U.D.S. version.
3. Select the **Setting**, then **ECM** tabs.
4. Slowly depress the throttle lever from the idle to WOT. The ETA should go from 0% to 100%.

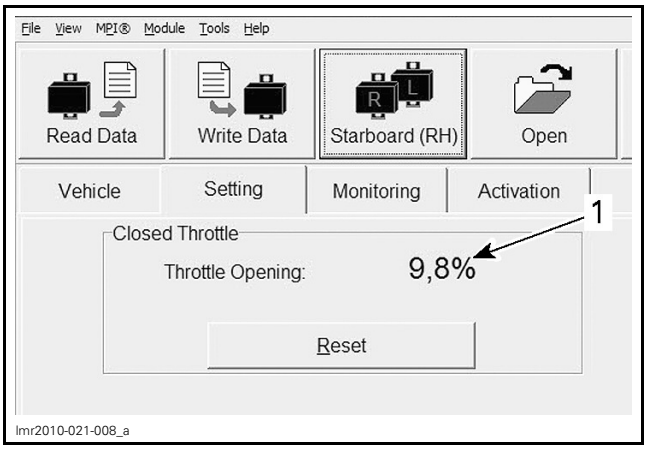

TYPICAL
1. ETA position

If result is out of specification, carry out a *CLOSED THROTTLE RESET*. Refer to *ADJUSTMENT* in this subsection.

NOTE: The ETA is reset at the same time as the TPS.

After the reset, test ETA again.

If the result is still out of specification, check wire continuity between ECM and throttle body before assuming the ETA is at fault.

Inspecting the ETA

Always check for corroded terminals or damaged wiring when diagnosing throttle body problems.

Testing the ETA (Dynamic)

1. Remove the parts required to access the throttle body.
2. Remove the air inlet hose from the throttle body.
3. Observe the throttle plate with the engine stopped.

NOTE: The throttle plate should be in the rest position (slightly opened).

⚠ WARNING

Keep your fingers out of the throttle plate area while the ECM turns on. The throttle actuator will cycle. This could cause serious finger injuries as throttle plate quickly moves.

4. As you observe the throttle plate, have someone press the START button to wake up the ECM.

NOTE: The throttle plate should cycle quickly from the rest position to a partially open position (approximately 14°), then back to the rest position.

5. Install the tether cord on the engine cut-off switch.

NOTE: The throttle plate should cycle again.

6. As you observe the throttle plate, have someone gradually and evenly pull in the throttle lever, then release it in the same way.

NOTE: The throttle plate should open then close according to throttle lever position. However, the movement of the throttle plate may not be linear with the displacement of the throttle lever.

If any test failed, proceed with the *TESTING THE THROTTLE BODY (STATIC)*.

Testing the ETA (Static)

⚠ WARNING

First ensure the ECM is off. Do not move the throttle plate using your fingers. Otherwise, if the START button is pressed the ECM turn on and quickly cycle the throttle plate which could cause serious finger injury.

1. Using a blunt tool, push in on the throttle plate and ensure it opens smoothly within the throttle body.

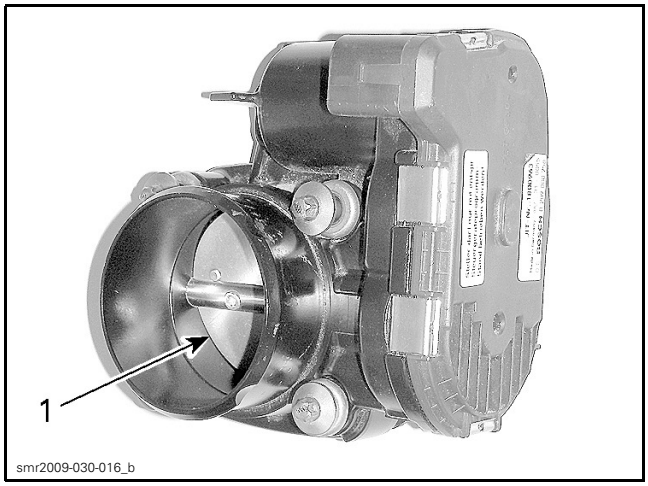

1. Push here to open

NOTE: The throttle plate must open fully and return freely to the rest position (slightly opened) when released.

2. Push throttle plate closed as indicated in following illustration. It must close completely and return freely to the rest position (slightly opened) when released.

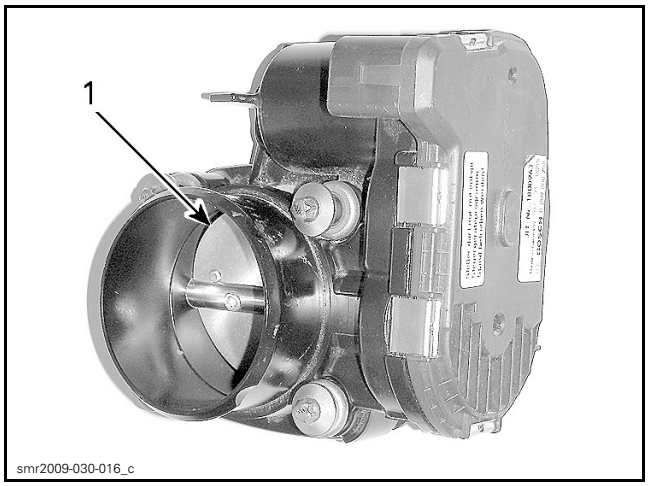

1. Push here to close

If the throttle plate does not move smoothly or does not return freely to the rest position, the problem is mechanical. Check for salt accumulation on throttle plate shaft. It may also be an actuator or gear problem. Replace throttle body as necessary.

If throttle plate operates normally, the problem is electrical. Check throttle actuator (ETA) wiring continuity, throttle position sensor (TPS) and throttle accelerator sensor (TAS).

⚠ WARNING

If the throttle plate does not return properly after a proper cleaning, replace the throttle body.

Cleaning the Throttle Body

Remove the parts required to access the throttle body.

Check throttle body cleanliness using a flashlight. Fully open throttle plate and verify:

– Throttle body bore
– Throttle plate edge.

Look for:

– Dirt
– Oily surfaces
– Carbon and salt deposits on throttle plate and the surrounding bore.

Clean as necessary.

NOTICE **Only use an appropriate throttle body cleaner that will not damage O-rings and EFI sensors.**

⚠ WARNING

Use the product in well ventilated area. Refer to product manufacturer's warnings. Wipe off any product leakage in bilge.

To avoid getting dirt into engine, spray cleaner on a clean rag (outside the bilge) then rub rag against throttle plate and bore. A toothbrush works well too.

⚠ WARNING

First ensure ECM is off. Otherwise, if ECM should suddenly turn off, it would quickly close the throttle plate which could cause serious finger injury.

Manually open throttle and hold fully open to reach all surfaces.

⚠ WARNING

Ensure nobody presses the START button. The ECM would turn on and the throttle actuator (ETA) would cycle. This could cause serious finger injury as the throttle plate moves quickly.

To remove residual dirt, spray cleaner on throttle plate and on bore.

Reinstall removed parts.

Throttle Body Replacement

Throttle Body Location

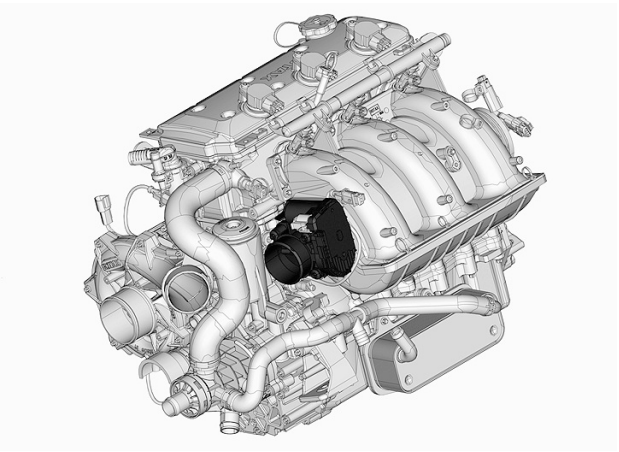

smr2016-027-106

Removing the Throttle Body

1. Disconnect inlet hose from throttle body.
2. Disconnect throttle body connector.

To remove connector from throttle body, press connector locking tab illustrated.

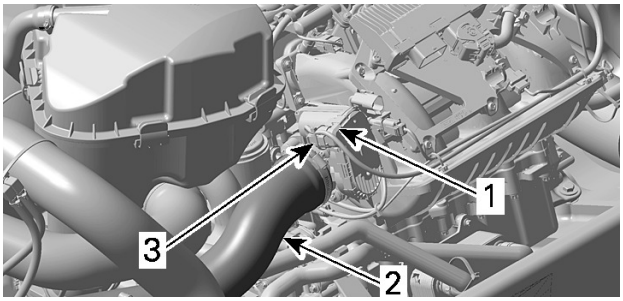

smr2009-030-024_a

1. *Throttle body*
2. *Inlet hose*
3. *Connector*

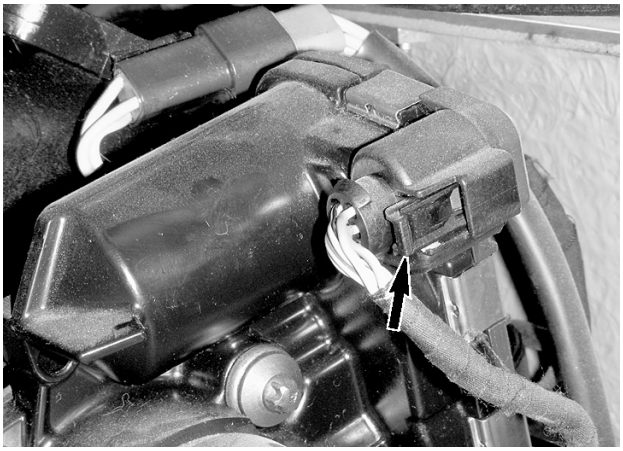

smr2009-030-031_a

PRESS HERE TO UNLOCK

3. Remove retaining screws from throttle body.

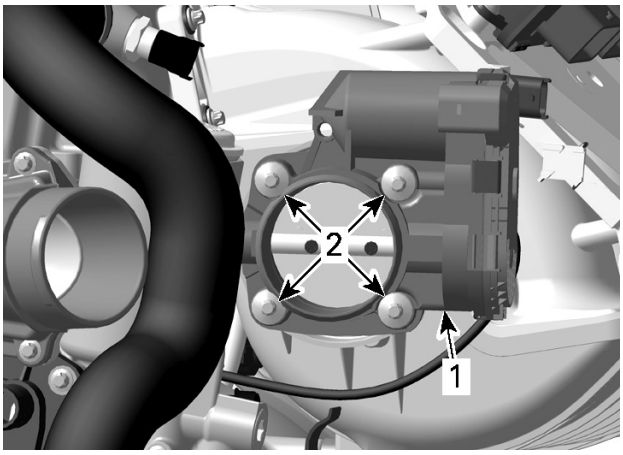

smr2016-027-007_a

1. *Throttle body*
2. *Retaining screws*

4. Pull throttle body off intake manifold.

Installing the Throttle Body

Installation is the reverse of the removal procedure. However, pay attention to the following.

1. Tighten retaining screws in a criss-cross sequence.

TIGHTENING TORQUE	
Throttle body retaining screws	9 N•m ± 1 N•m (80 lbf•**in** ± 9 lbf•**in**)

2. Perform the **Closed Throttle** reset. See procedure in *ADJUSTMENTS* in this subsection.

TPS (THROTTLE POSITION SENSOR)

General

NOTE: The TPS is part of the throttle body.

The throttle position sensor (TPS) is a double potentiometer that sends signals to the ECM that are proportional to the throttle plate angle. The TPS is located inside the throttle body.

Testing the TPS Wear

1. With the engine turned off, slowly pull in throttle lever and pay attention for smooth operation without physical stops.
2. Press the START button to wake up the ECM.
3. Install the tether cord on the engine cut-off switch.
4. Connect watercraft to B.U.D.S. software. Refer to *COMMUNICATION TOOLS AND B.U.D.S.* subsection.
5. In B.U.D.S., click the following:
   – **Monitoring** tab
   – **ECM** tab.
6. Slowly and regularly depress the throttle lever.
7. Observe the **Throttle Opening** needle movement in B.U.D.S.

MONITORING AND ECM TABS

NOTE: The needle should move gradually and regularly as you move the throttle lever. If the needle "sticks", bounces or suddenly drops, it may indicate a worn TPS that needs to be replaced. An initial slight delay after the throttle lever is pulled and before the needle starts to move is normal.

If the needle behavior is not as expected, proceed with the following steps.

8. Manually move the throttle plate in throttle body using a blunt tool (without sharp tip).

⚠ WARNING

Do not move throttle plate with your fingers. Otherwise, if ECM should turn off, it would quickly close the throttle plate which could cause serious finger injury.

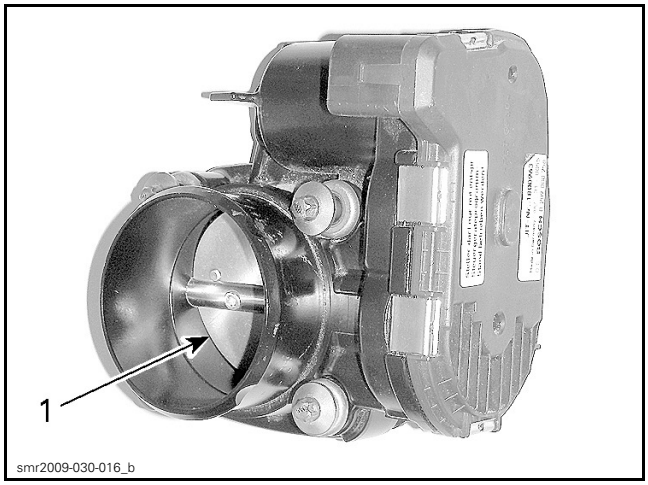

1. Push here

9. Check needle movement again.
– If needle moves as expected, check the throttle accelerator sensor (TAS). Refer to *INTELLIGENT THROTTLE CONTROL (ITC)* subsection.
– If needle does not move as expected, perform *TESTING THE TPS RESISTANCE* in this subsection.

Testing the TPS Resistance

1. Remove the parts required to access the throttle body.
2. Ensure the throttle body connector is properly connected.
3. Disconnect ECM-A connector from the ECM, refer to *ECM ACCESS* in this subsection.
4. Probe circuit as per following table while using a finger to manually move throttle plate.

REQUIRED TOOL	
ECM ADAPTER TOOL (P/N 529 036 166)	
FLUKE 115 MULTIMETER (P/N 529 035 868)	

Install ECM connector on ECM adapter.

Set multimeter to Ω.

ECM ADAPTER		FULLY CLOSED THROTTLE PLATE (1)		FULLY OPEN THROTTLE PLATE	
		RESISTANCE (Ω)			
PIN		MIN.	MAX.	MIN.	MAX.
A-A2	A-K4	875	1625	875	1625
A-A2	A-K3	954	1934	228	585
A-A2	A-F3	254	634	980	1983
A-K3	A-K4	228	585	954	1934
A-K3	A-F3	1385	2315	1385	2315
A-K4	A-F3	980	1983	254	634

(1) To obtain the fully closed position, it is necessary to push against the throttle plate in the throttle body with a finger and hold it in this position for the measurement.

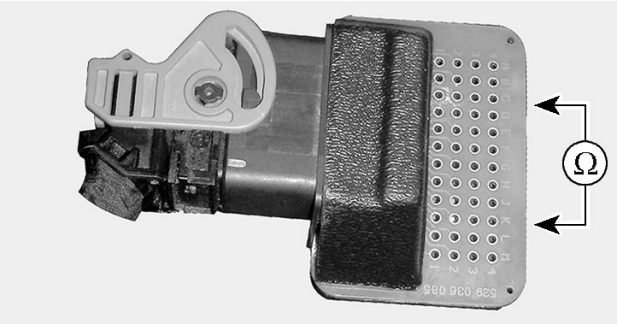

vmr2008-022-005_a

If any resistance value is incorrect, check wire continuity between ECM and throttle body before assuming the TPS is at fault. Refer to *WIRING DIAGRAM* subsection.

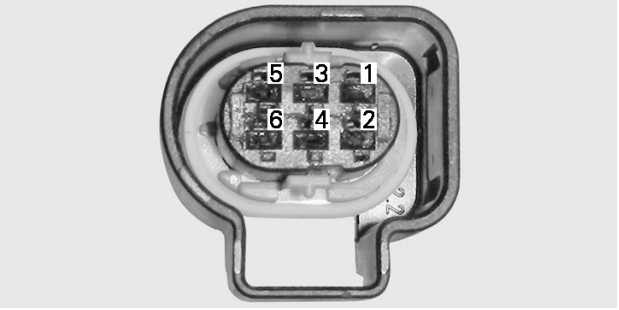

smr2009-030-032_a

TPS CONNECTOR PIN-OUT

If the TPS resistance values are correct, try a new ECM. Refer to *ENGINE CONTROL MODULE (ECM)* in this subsection.

CRANKSHAFT POSITION SENSOR (CPS)

Troubleshooting the CPS

NOTICE Take into account that a CPS fault can be triggered by electronic or mechanical fault:

1. Check for fault codes
2. Test the CPS as per following procedure
3. If it tests good, check trigger wheel teeth condition. Refer to *PTO HOUSING AND MAGNETO* subsection.

CPS and CPS Connector Location

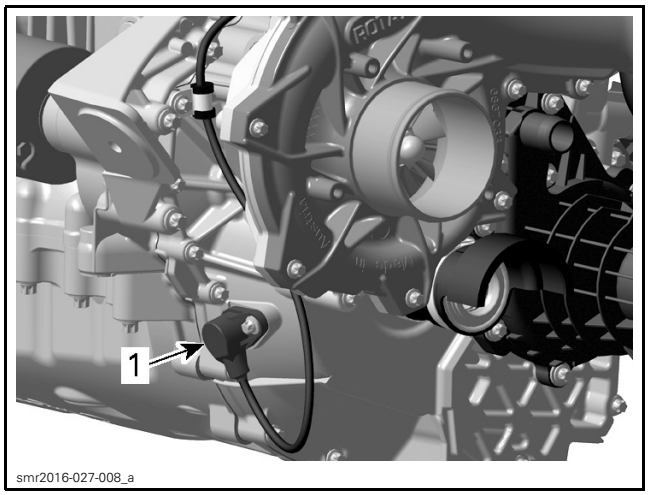

1. Crankshaft Position Sensor (CPS)

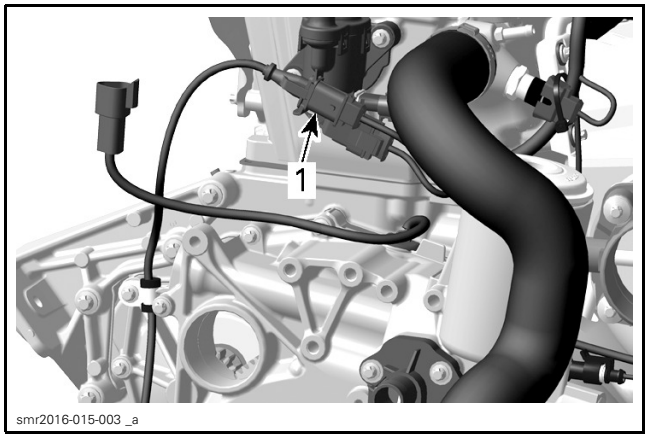

SUPERCHARGER REMOVED FOR CLARITY
1. CPS connector

Testing the CPS Voltage

1. Disconnect CPS wiring harness connector.
2. Press the START button to wake up the ECM.
3. Install the tether cord on the engine cut-off switch.
4. Pull the throttle lever completely in to the handlebar and hold (drowned mode).
5. While cranking the engine, probe CPS terminals.

CPS CONNECTOR		MEASUREMENT
PIN		VOLTAGE
1	2	Approximately 3.7 Vac

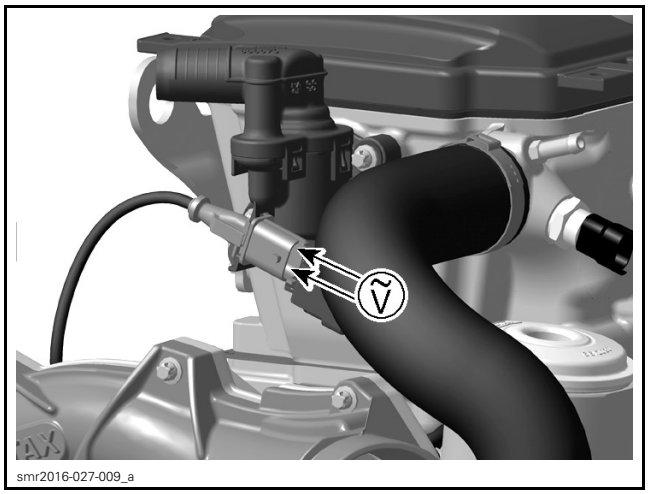

If voltage is not as specified, carry out *TESTING THE CPS RESISTANCE AT CPS CONNECTOR*.

If voltage is as specified, check continuity of wiring between CPS connector and ECM connector. Refer to *TESTING THE CPS RESISTANCE AT ECM CONNECTOR*.

Testing the CPS Resistance at CPS Connector

1. Probe CPS connector terminals as per following table.

CPS CONNECTOR		MEASUREMENT
PIN		RESISTANCE Ω @ 20°C (68°F)
1	2	775 - 950 Ω

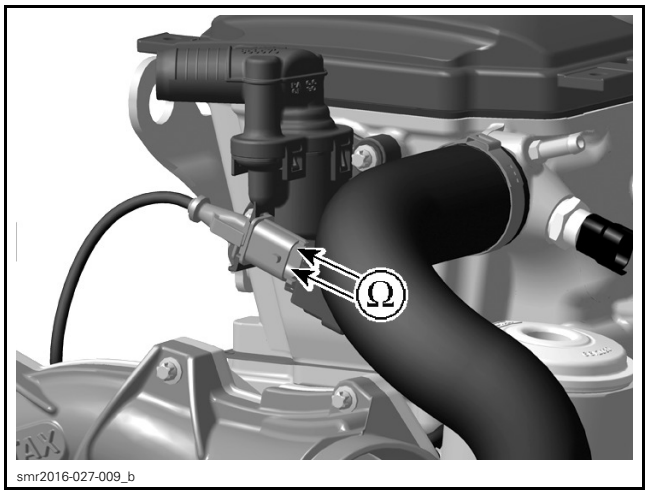

If resistance is not within specifications, replace the CPS.

If resistance tests good carry out *TESTING THE CPS RESISTANCE AT ECM CONNECTOR*.

Testing the CPS Resistance at ECM Connector

1. Remove parts required to access ECM-A connector.
2. Disconnect ECM-A connector from the ECM.
3. Probe CPS terminals as per following table.

REQUIRED TOOL	
FLUKE 115 MULTIMETER (P/N 529 035 868)	
ECM ADAPTER TOOL (P/N 529 036 166)	

Set multimeter to Ω.

Install ECM connector on ECM adapter.

ECM-A CONNECTOR		MEASUREMENT
PIN		RESISTANCE Ω @ 20°C (68°F)
A-H1	A-K2	775 - 950 Ω

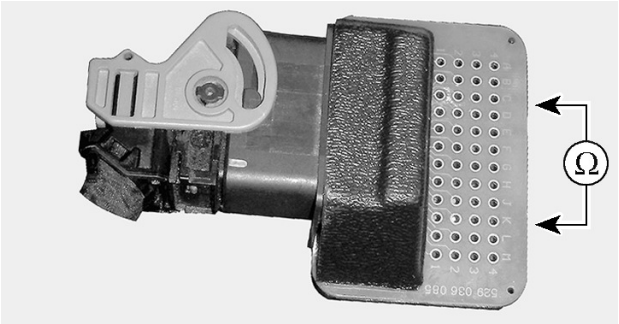

vmr2008-022-005_a

If resistance measured is as specified, check ECM. Refer to *ENGINE CONTROL MODULE (ECM)* in this subsection.

If resistance measured is not as specified, repair or replace wiring and connectors between ECM and the CPS.

CPS Replacement

CPS Replacement

1. Drain oil from PTO housing. Refer to *PTO HOUSING, MAGNETO AND STARTER*.

NOTE: It is not necessary to drain oil from engine.

2. Disconnect CPS connector.

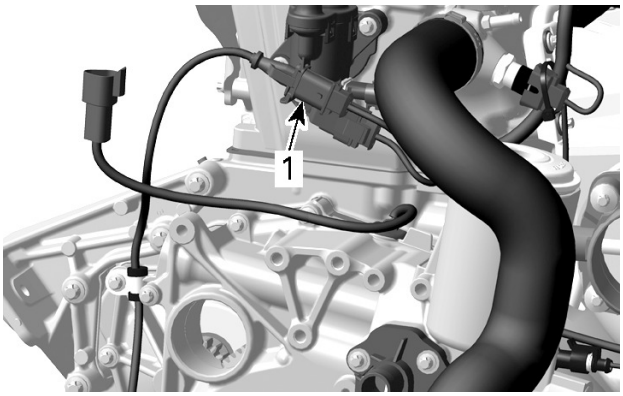

smr2016-015-003 _a

SUPERCHARGER REMOVED FOR CLARITY
1. CPS connector

3. Remove CPS harness retaining clamp.
4. Remove CPS retaining screw.

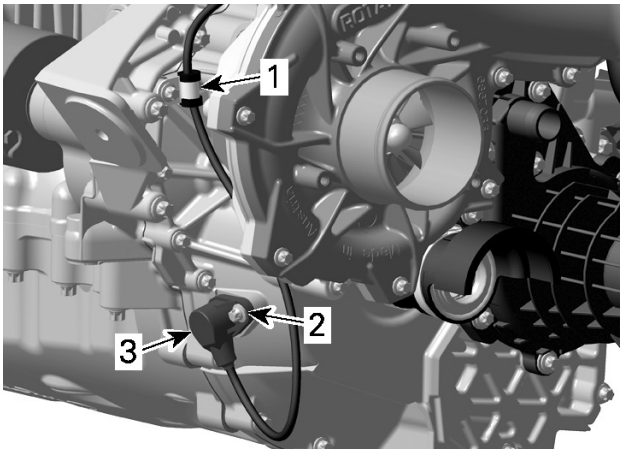

smr2016-027-008_b

1. CPS harness retaining clamp
2. CPS retaining screw
3. CPS

5. Pull out CPS.

Installation is the reverse removal procedure. However, pay attention to the following.

6. Tighten CPS retaining screw to specification.

TIGHTENING TORQUE	
Service product	LOCTITE 243 (BLUE) (P/N 293 800 060)
CPS retaining screw	9 N•m ± 1 N•m (80 lbf•**in** ± 9 lbf•**in**)

7. Refill engine oil and check oil level, refer to *LUBRICATION SYSTEM* subsection.

CAMSHAFT POSITION SENSOR (CAPS)

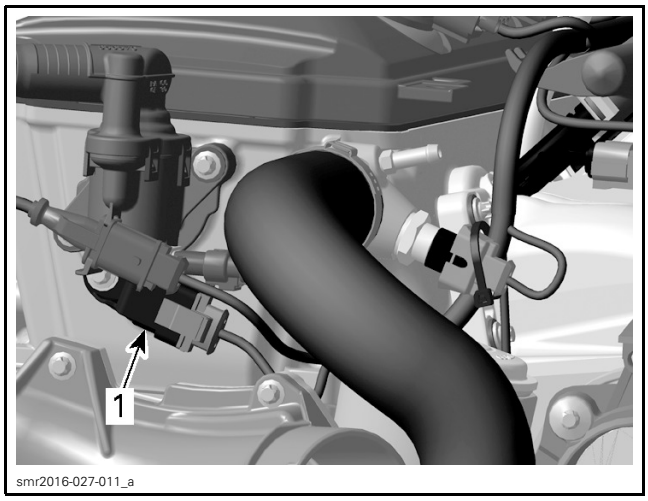

1. CAPS

Testing the CAPS Voltage (Harness Side)

1. First check fuse F12 in fuse box. Replace as required.
2. Remove the parts required to access the CAPS.
3. Disconnect CAPS connector.

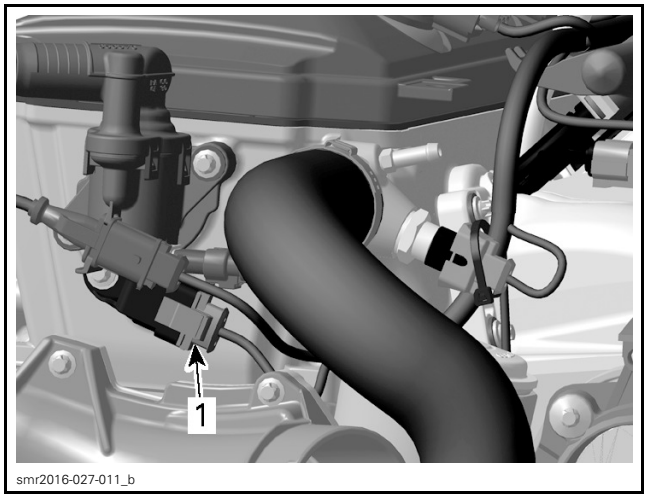

1. CAPS connector

4. Press the START button to wake up the ECM.
5. Install tether cord on engine cut-off switch.
6. Probe harness connector terminals as per following table.

CAPS CONNECTOR		MEASUREMENT
PIN		VOLTAGE
3	1	Battery voltage

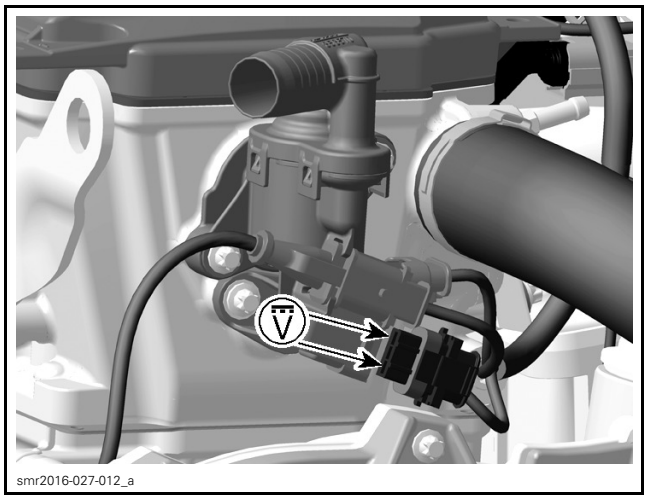

If battery voltage is read, proceed with *TESTING THE CAPS (DYNAMIC)* in this subsection.

If battery voltage is not read, probe circuit as per following table.

MEASUREMENT		VOLTAGE
CAPS connector pin 3	Battery ground	Battery voltage

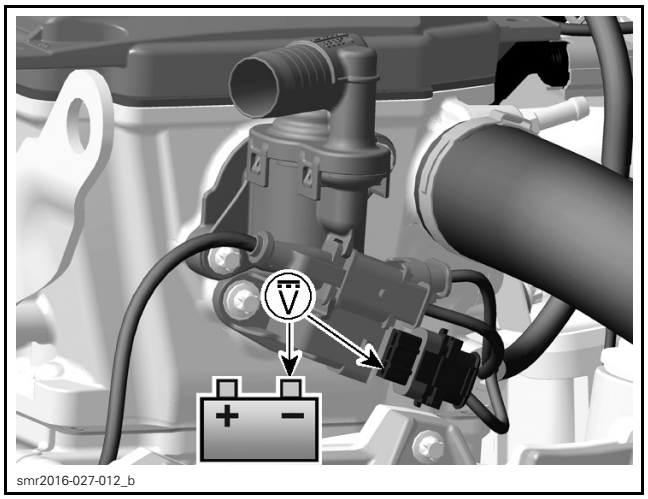

If voltage is read to battery ground, check continuity of ground circuit between CAPS pin 1 and ECM-A connector pin D4. Repair or replace wiring and connectors.

If voltage is not read to battery ground, carry out *TESTING THE CONTINUITY OF CAPS POWER CIRCUIT*.

Testing the Continuity of CAPS Power Circuit

1. Remove cover from fuse box. Refer to *POWER DISTRIBUTION*.
2. Remove the long bus bar.

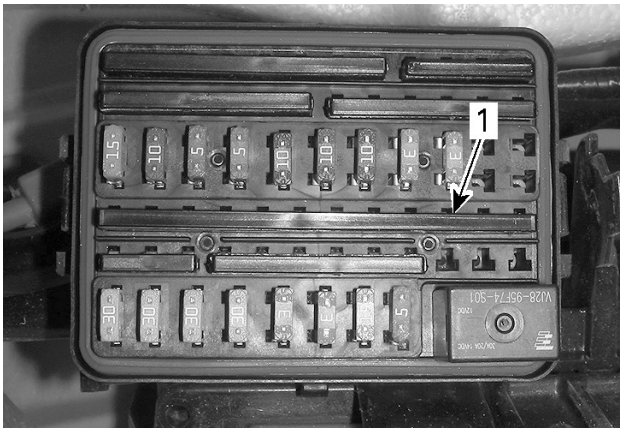

smr2011-027-003_L

1. Pull out

3. Read resistance of the CAPS circuit as per following table.

REQUIRED TOOL	
FLUKE 115 MULTIMETER (P/N 529 035 868)	

Set multimeter to Ω.

FUSE BOX	CAPS CONNECTOR	RESISTANCE
TERMINAL	PIN	Ω
H10	3	Close to 0 Ω (continuity)

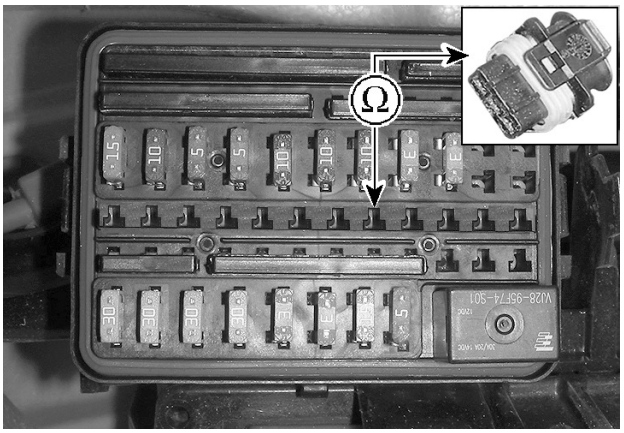

smr2011-027-003_o

If continuity is good, wiring and connectors are functional.

If a high resistance or an open circuit is measured, check the short bus bar in fuse box, repair or replace wiring and connectors from fuse box terminal to CAPS connector.

4. Reinstall bus bar and cover.

Testing the CAPS (Dynamic)

1. Remove the parts required to access the CAPS.
2. Remove CAPS sensor from engine.
3. Back-probe connector and read voltage as follows.

NOTE: To safely probe wire terminals through the back of the connector, using following tools or equivalent. Care must be taken not to damage connector seals.

REQUIRED TOOL	
FLUKE AUTOMOTIVE BACK PROBE PIN (P/N TP40)	
FLUKE SUREGRIP INSULATED TEST LEADS (P/N TL224)	

NOTICE **Do not use sharp end probes. They could damage the connector seal.**

CAPS CONDITION	CAPS CONNECTOR		VOLTAGE
Free	2	1	Close to 12 Vdc

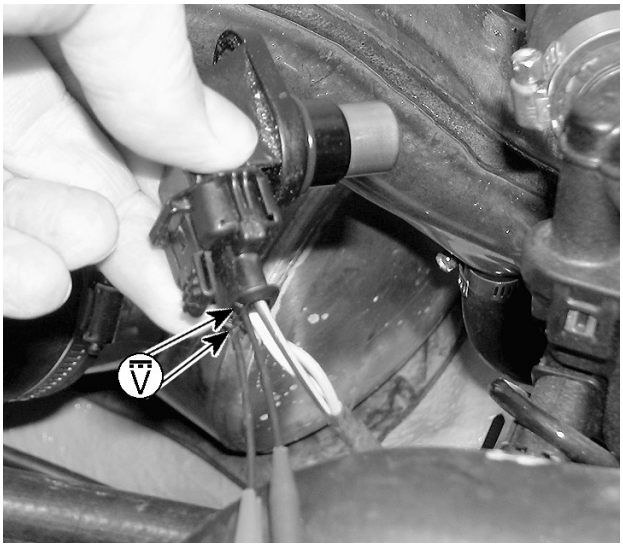

smr2007-021-010_a

TYPICAL

CAPS CONDITION	CAPS CONNECTOR		VOLTAGE
Metallic object on sensor just for a few seconds	2	1	Close to 0 Vdc

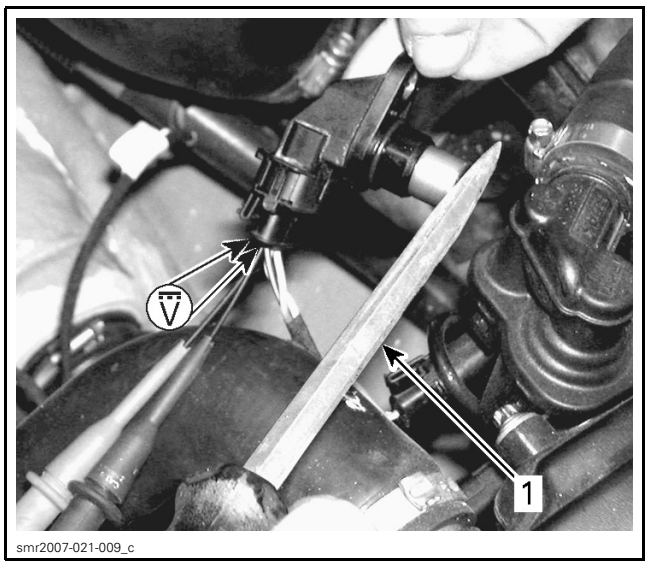

1. Metallic object

NOTE: Check several times if voltage follows the placement of the metallic object. Voltage must change each time.

If voltage is as specified, repair or replace wiring and connectors between sensor and ECM.

If wiring is good, check ECM. Refer to *ENGINE CONTROL MODULE (ECM)*.

If voltage is not measured as specified, try a new CAPS.

CAPS Replacement

CAPS Replacement

1. Detach CPS connector from its holder.

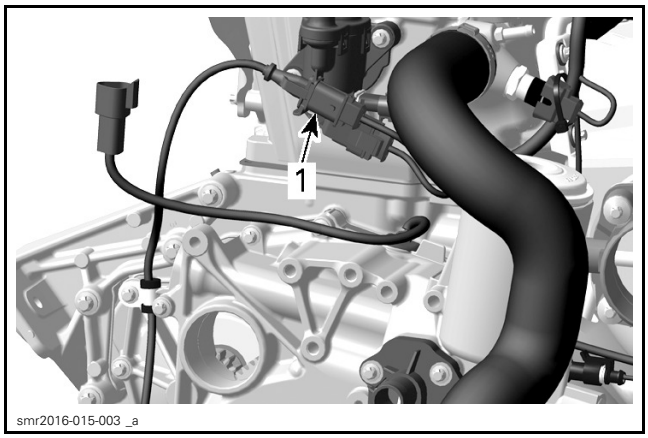

SUPERCHARGER REMOVED FOR CLARITY
1. CPS connector

2. Disconnect CAPS connector.

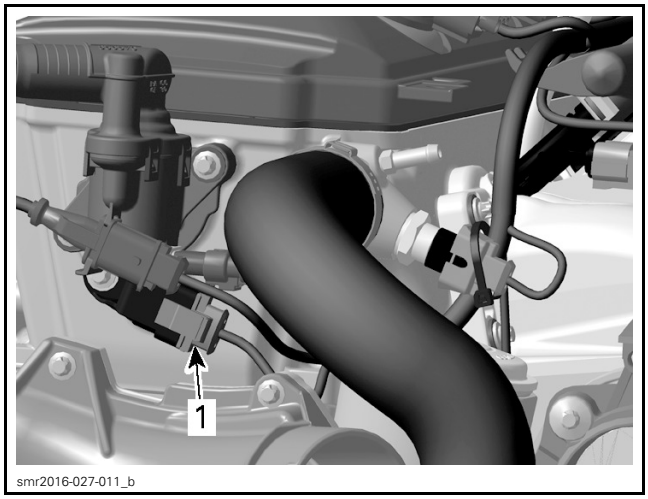

1. CAPS connector

3. Unscrew the CAPS retaining screw.
4. Pull CAPS from engine.
5. Install the CAPS.

NOTICE **Be sure to install new O-ring on a reused CAPS.**

6. Tighten CAPS retaining screw to specification.

TIGHTENING TORQUE	
Service product	LOCTITE 243 (BLUE) (P/N 293 800 060)
CAPS retaining screw	9 N•m ± 1 N•m (80 lbf•**in** ± 9 lbf•**in**)

COOLANT TEMPERATURE SENSOR (CTS)

The CTS is located between the intake manifold and the oil filter cover.

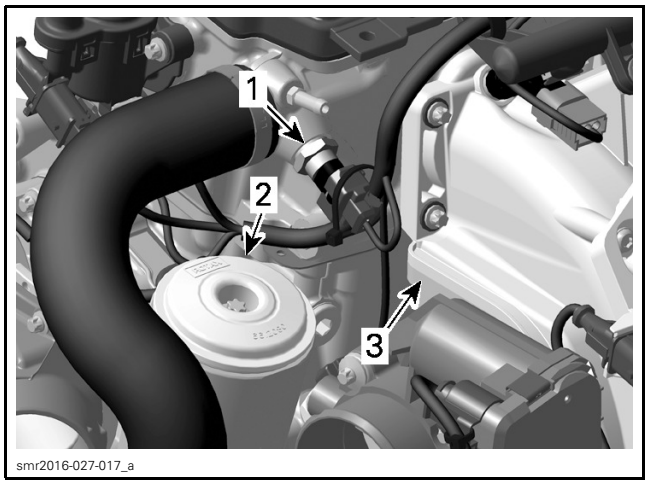

1. Coolant temperature sensor (CTS)
2. Oil filter cover
3. Intake manifold

NOTE: The CTS will cause the engine overheat warning to come on when the coolant temperature is above:

OVERHEAT TEMPERATURE
110°C (230°F)

Check for debris or blockage in cooling system.

CTS Quick Test

1. Connect the vehicle B.U.D.S. Refer to *COMMUNICATION TOOLS AND B.U.D.S.* subsection.
2. In B.U.D.S., select the following:
   - **Read Data** button
   - **Monitoring** page tab
   - **ECM** page.
3. Look for the engine temperature indication.

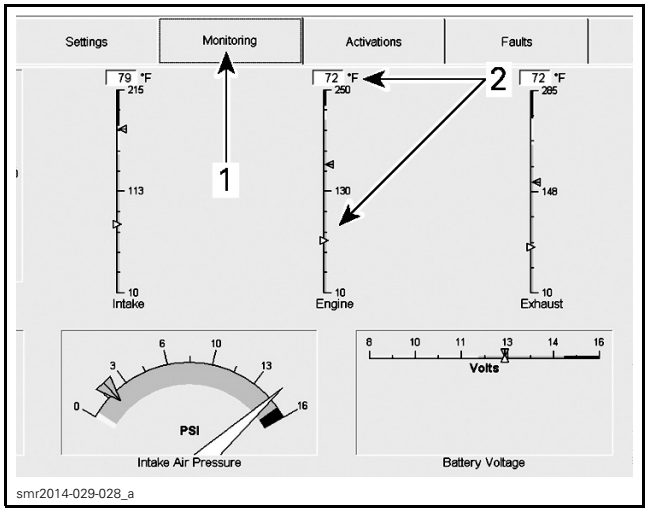

TYPICAL
1. Monitoring tab
2. Engine temperature

The engine temperature gauge in B.U.D.S. should provide an indication of the actual engine coolant temperature. Otherwise, test the *CTS RESISTANCE* .

Testing the CTS Resistance

1. Remove parts required to access ECM connectors.
2. Disconnect the ECM-A connector.
3. Check the CTS circuit resistance as per table.

REQUIRED TOOL	
FLUKE 115 MULTIMETER (P/N 529 035 868)	
ECM ADAPTER TOOL (P/N 529 036 166)	

Set multimeter to Ω.

Install ECM connector on ECM adapter.

CTS RESISTANCE TEST		
ECM ADAPTER PIN		RESISTANCE Ω
A-A1	A-J2	See *CTS TEMPERATURE SENSOR TABLE*

If resistance test is good, replace the ECM.

If resistance is out of specification, proceed with the following steps.

4. Remove the parts required to access the CTS.
5. Disconnect the CTS connector.
6. Check continuity of wiring between ECM and CTS connector, refer to *WIRING DIAGRAM*. If there is an open circuit, repair or replace wiring and connectors.
7. If continuity of wiring is good, test the resistance of the sensor as per following tables.

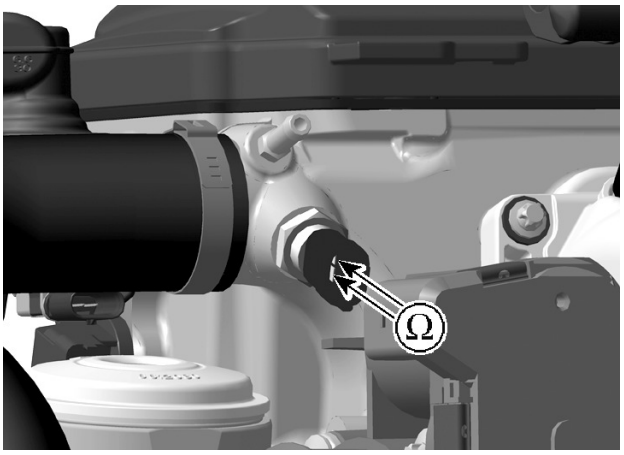

smr2016-027-013_a

CTS RESISTANCE TEST		
CTS SENSOR PIN		RESISTANCE Ω
1	2	See *CTS TEMPERATURE SENSOR TABLE*

CTS TEMPERATURE SENSOR TABLE			
TEMPERATURE		RESISTANCE (OHMS)	
°C	°F	LOW	HIGH
- 40	- 40	38457	52630
- 10	14	8208	10656
20	68	2233	2780
80	176	297	349
120	248	105	122

NOTE: To test sensor at various temperatures, remove sensor and use a heat gun, ice and a thermometer. Refer to *REPLACING THE CTS*.

If the resistance value measured is as specified, repair the connectors or replace the wiring harness between ECM connector and CTS connector.

If the resistance value is not within specification replace CTS.

Replacing the CTS

CTS Replacement

1. Drain engine coolant to below CTS level, refer to *COOLING SYSTEM* subsection.
2. Cut locking tie on wiring harness and move wiring aside for access. Be sure to take note of their position.
3. Disconnect CTS connector and remove CTS.
4. Install the new CTS and tighten to specification.

TIGHTENING TORQUE	
Coolant temperature switch	17 N•m ± 2 N•m (150 lbf•**in** ± 18 lbf•**in**)

5. Reinstall remaining removed parts. Be sure to secure wiring harness as noted prior to removal.
6. Refill and bleed the cooling system, refer to *COOLING SYSTEM* subsection.
7. Reinstall remaining removed parts.

MANIFOLD ABSOLUTE PRESSURE AND TEMPERATURE SENSOR (MAPTS)

NOTE: This sensor is a multifunction device. It measures manifold absolute pressure and intake air temperature for air flow calculations.

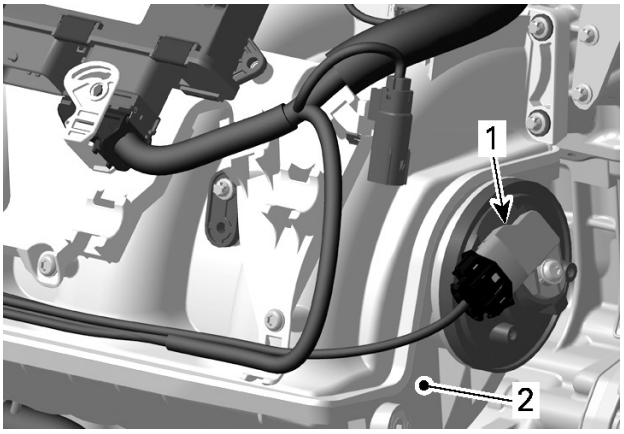

FRONT SIDE OF ENGINE
1. *Manifold absolute pressure and temperature sensor (MAPTS)*
2. *Intake manifold*

MAPTS Pressure Function

NOTE: This sensor is a dual function device. Before the engine is started, when power is applied to the system, the sensor measures the ambient atmospheric pressure and stores it in the ECM. Thereafter, once the engine is started, it measures the air pressure in the intake manifold at operating RPMs.

Ensure sensor is correctly installed on intake manifold. Otherwise, the MAPTS could generate a fault code for an unexpected sensor range at idle when it reads an erroneous intake manifold pressure. Remove sensor and check for oil or dirt on its end and if problem persists, check throttle plate condition/position and the wiring harness. Perform the following tests.

MAPTS Pressure Function Quick Test

1. Connect vehicle to the applicable B.U.D.S. software version.
2. In B.U.D.S., select the following:
   - **Read Data**
   - **Monitoring** tab
   - **ECM** tab.

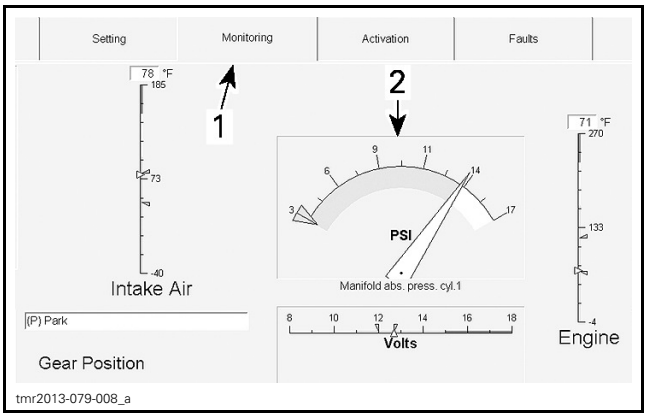

1. *Monitoring tab*
2. *MAPTS pressure reading*

3. Look for and take note of the MAPTS pressure reading while the engine is stopped.

Values have to be within ± 3.4 kPa (.5 PSI).

MAPTS PRESSURE FUNCTION QUICK TEST			
RESULT	SERVICE ACTION		
NO READING	Circuit Continuity Test of MAPTS Pressure Function	MAPTS Input Voltage Test	Repair or replace wiring
VALUE IS OUT OF RANGE	Replace MAPTS		

4. Perform the same test with a new MAPTS and compare both readings.

Testing the MAPTS Input Voltage (Pressure Function)

1. Remove the parts required to access the MAPTS.
2. Disconnect connector from MAPTS.

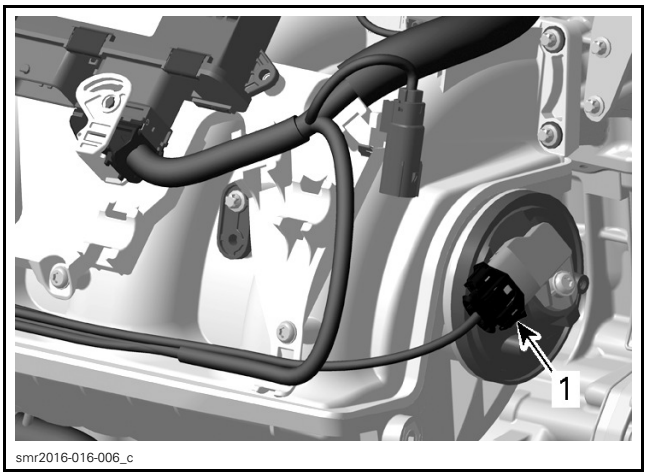

1. *MAPTS connector*

3. Press the START button to wake up the ECM.
4. Install the tether cord on the engine cut-off switch.
5. Read voltage as per following table.

REQUIRED TOOL	
FLUKE 115 MULTIMETER (P/N 529 035 868)	

Set multimeter to Vdc.

MAPTS CONNECTOR	VOLTAGE
Terminal 3 to battery ground	Approx. 5 V
Terminal 4 to battery ground	Approx. 0 V
Terminal 1 to battery ground	Approx. 0 V

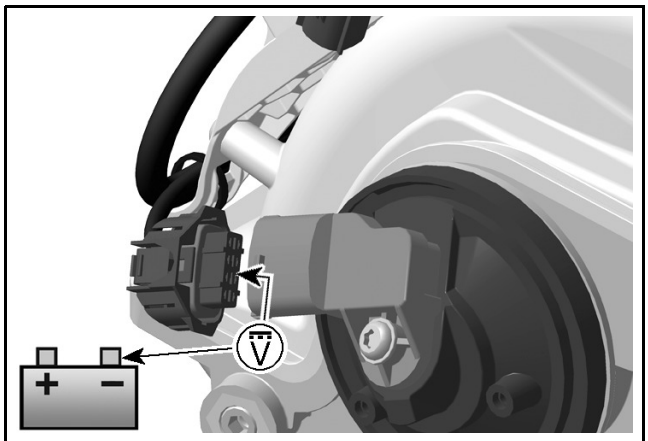

smr2016-027-016_a

If voltage measured is as specified, replace the MAPTS.

If voltage measured is not as specified, refer to *TESTING THE CONTINUITY OF MAPTS WIRING HARNESS (PRESSURE FUNCTION)*.

Testing the Continuity of MAPTS Wiring Harness (Pressure Function)

1. Disconnect ECM-A connector from the ECM.
2. Test for circuit continuity as per following table.

REQUIRED TOOL	
ECM ADAPTER TOOL (P/N 529 036 166)	
FLUKE 115 MULTIMETER (P/N 529 035 868)	

Install ECM connector on ECM adapter.

Set multimeter to Ω.

MAPTS CONNECTOR	ECM CONNECTOR	RESISTANCE
Pin 1	A-H2	Close to 0 Ω continuity
Pin 3	A-B4	
Pin 4	A-G4	

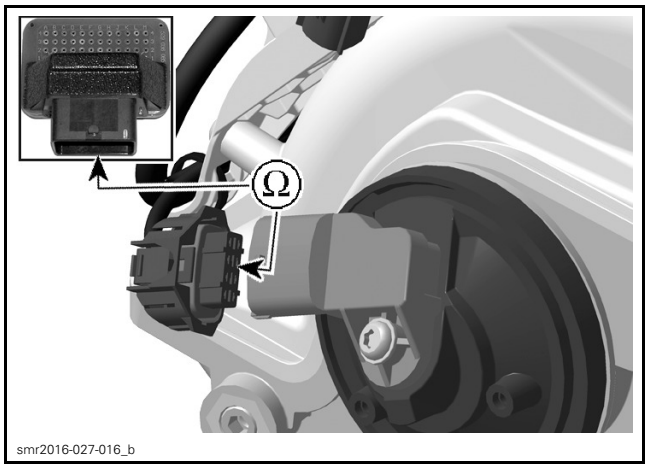

smr2016-027-016_b

If resistance is not within specification, repair or replace the wiring harness between ECM connector and the MAPTS. Refer to *WIRING DIAGRAM*.

MAPTS Temperature Function

The sensor monitors the air temperature inside the intake manifold.

MAPTS Quick Test (Temperature Function)

1. Connect vehicle to the applicable B.U.D.S. software version.
2. In B.U.D.S., select the following:
   – **Read Data**
   – **Monitoring** tab
   – **ECM** tab.
3. Look for the **Intake Air** temperature reading while the engine is stopped.

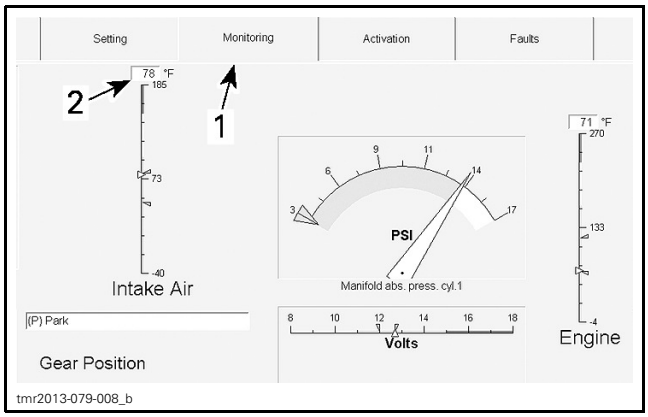

1. *Monitoring tab*
2. *MAPTS temperature reading*

NOTE: If the complete vehicle is at room temperature, B.U.D.S. should display the ambient air temperature at the intake manifold.

4. Perform the same test with a new MAPTS and compare both readings.

If the engine's MAPTS temperature reading is significantly different than the new MAPTS, replace it.

NOTE: Both sensors must measure the same ambient air temperature.

If there is no reading, carry out *TESTING THE MAPTS RESISTANCE (TEMPERATURE FUNCTION)*.

Testing the MAPTS Resistance (Temperature Function)

Disconnect the connector from the MAPTS.

Check the resistance of the sensor itself as shown.

REQUIRED TOOL	
FLUKE 115 MULTIMETER (P/N 529 035 868)	

Set multimeter to Ω.

MAPTS		MEASUREMENT
PIN		
1	2	Refer to MAPTS TEMPERATURE SENSOR TABLE

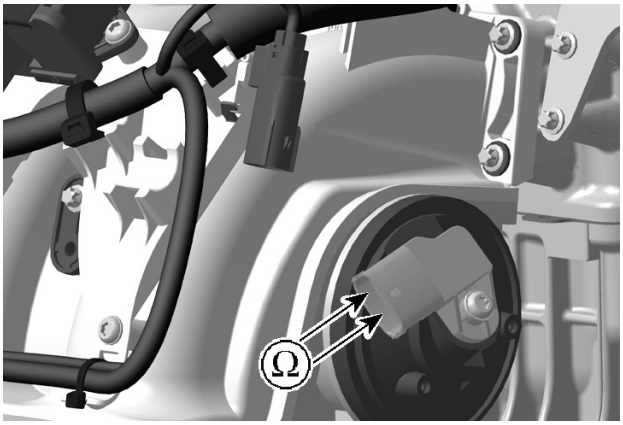

MAPTS TEMPERATURE SENSOR TABLE			
TEMPERATURE		RESISTANCE (OHMS)	
°C	°F	LOW	HIGH
- 40	- 40	40528	56935
- 10	14	8103	10919
20	68	2193	2863
80	176	294	368
120	248	98	122

If resistance is not within specification, replace the MAPTS.

If resistance tests good, **reconnect** the MAPTS and disconnect the ECM-A connector.

Using a multimeter, recheck resistance value as per following table.

REQUIRED TOOL	
ECM ADAPTER TOOL (P/N 529 036 166)	

Install ECM connector on ECM adapter.

ECM CONNECTOR		MEASUREMENT
PIN		
A-H2	A-H3	Refer to MAPTS TEMPERATURE SENSOR TABLE

MAPTS TEMPERATURE SENSOR TEST RESULTS			
RESULT	SERVICE ACTION		
NO READING	Circuit Continuity Test of MAPTS Temperature Function	MAPTS Input Voltage Test	Repair or replace wiring
INCORRECT RESISTANCE VALUE	Replace MAPTS		
CORRECT RESISTANCE VALUE	Try a new ECM		

Testing the MAPTS Circuit Continuity (Temperature Function)

MAPTS CIRCUIT CONTINUITY TEST (TEMPERATURE FUNCTION)		
ECM-A	MAPTS CONNECTOR	RESISTANCE VALUE
Pin H2	Pin 1	Close to 0 Ω
Pin H3	Pin 2	

MAPTS Replacement

MAPTS Replacement

1. Disconnect MAPTS connector and remove the MAPTS.
2. Install the new MAPTS paying attention to index its tab into the adaptor notch.
3. Tighten retaining screw to specification.

TIGHTENING TORQUE	
Service product	LOCTITE 243 (BLUE) (P/N 293 800 060)
MAPTS retaining screw	5.5 N•m ± 0.6 N•m (49 lbf•**in** ± 5 lbf•**in**)

4. Reinstall remaining parts removed, refer to applicable subsections.

EXHAUST GAS TEMPERATURE SENSOR (EGTS)

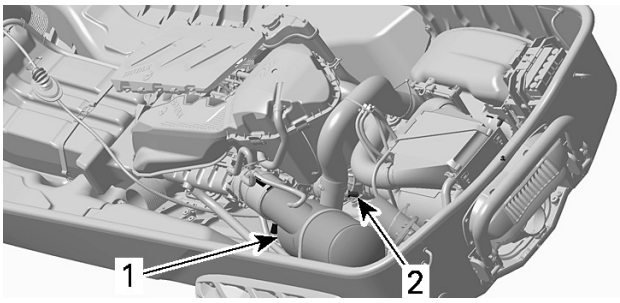

smr2009-030-040_a

1. Muffler
2. Exhaust gas temperature sensor (EGTS)

NOTE: An overheat signal will come on in the information center when the exhaust temperature reaches.

OVERHEAT TEMPERATURE
110°C (230°F)

Testing the EGTS Resistance

1. Remove the parts required to access the EGTS.
2. Disconnect the connector from the EGTS.
3. Measure the resistance of the sensor.

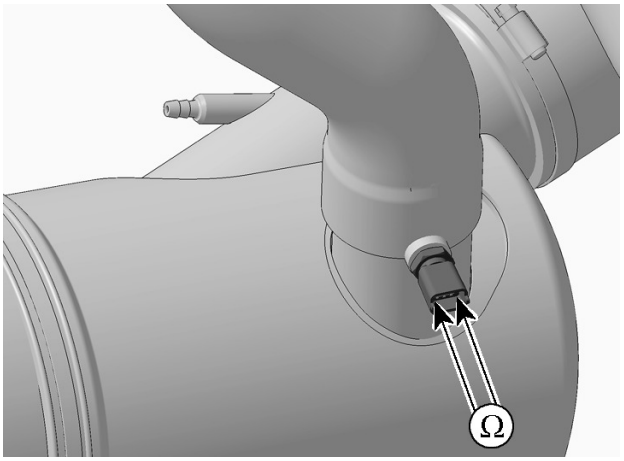

smr2008-023-018_a

The resistance should be as per the *EGTS RESISTANCE CHART* that follows. Otherwise, replace the EGTS.

If the EGTS resistance is within specifications, proceed with the following steps.

4. Reconnect the EGTS and disconnect ECM-A connector from the ECM.

5. Using a multimeter and the ECM ADAPTER TOOL (P/N 529 036 166), check the circuit resistance as per following table.

ECM ADAPTER		MEASUREMENT
PIN		RESISTANCE Ω
B-F3	B-G4	See *EGTS RESISTANCE CHART*

EGTS RESISTANCE CHART				
TEMPERATURE		RESISTANCE (OHMS)		
°C	°F	NOMINAL	LOW	HIGH
- 30	- 22	12600	11800	13400
- 20	- 4	11400	11000	11800
- 10	14	9500	8000	11,000
0	32	5900	4900	6900
10	50	3800	3100	4500
20	68	2500	2200	2800
30	86	1700	1500	1900
40	104	1200	1080	1320
50	122	840	750	930
60	140	630	510	750
70	158	440	370	510
80	176	325	280	370
90	194	245	210	280
100	212	195	160	210
110	230	145	125	160
120	248	115	100	125

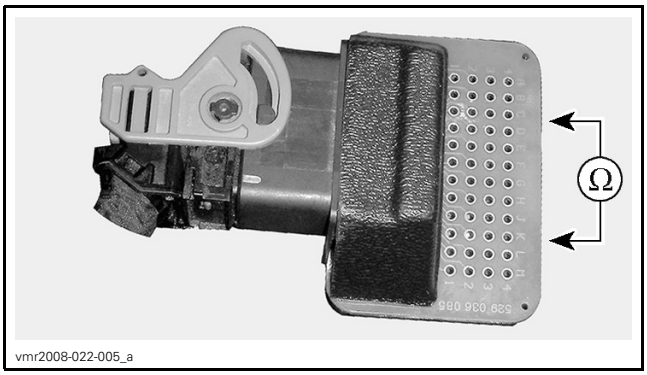

vmr2008-022-005_a

If resistance value is as specified, check ECM. Refer to *ENGINE CONTROL MODULE (ECM)* in this subsection.

If resistance value is not within specifications, repair or replace wiring and connectors between the ECM and the EGTS.

Replacing the EGTS

1. Disconnect the EGTS connector.
2. Unscrew EGTS from muffler.
3. Apply LOCTITE 518 (P/N 293 800 038) on the middle threads of the new EGTS.

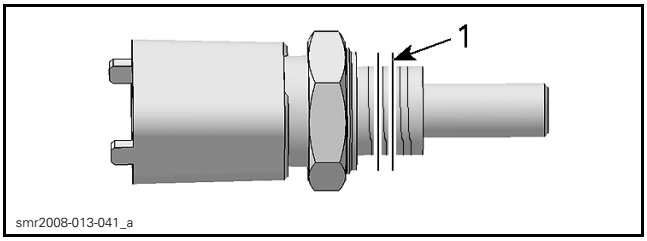

smr2008-013-041_a

1. Apply Loctite 518 in this area

4. Install the EGTS.

TIGHTENING TORQUE	
EGTS	16 N•m (142 lbf•**in**)

5. Install the EGTS connector.
6. Install all other removed parts, refer to applicable subsections.

KNOCK SENSOR (KS)

Knock Sensor Location

The KS is located in the cylinderblock behind the intake manifold

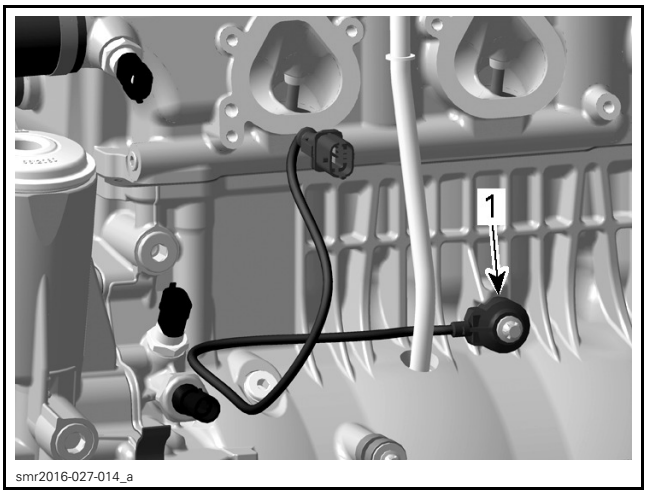

smr2016-027-014_a

1. Knock sensor (KS)

Testing the KS (Dynamic)

1. Connect watercraft to B.U.D.S. software, refer to *COMMUNICATION TOOLS AND B.U.D.S.* subsection.
2. In B.U.D.S., click the **Faults** tab and look for a **Knock sensor fault**.
3. Start engine and throttle it to above 5000 RPM.

NOTE: The engine must not run out of the water without providing proper cooling to the exhaust system. Maximum engine run time out of water is 2 minutes. Failure to do so may result in damage to the exhaust system and engine. Refer to *EXHAUST SYSTEM* subsection.

4. Using the B.U.D.S. software, monitor the knock sensor for a fault code.

If no fault occurs, the knock sensor is good.

If a fault occurs, carry out the following steps.

5. Ensure sensor and cylinder block contact surfaces are clean.
6. Ensure the correct mounting bolt and washer are used and are properly torqued.

NOTE: It is necessary to remove the intake manifold to inspect the contact surfaces. Refer to *INTAKE MANIFOLD* subsection.

7. Check the knock sensor resistance, refer to *TESTING THE KS RESISTANCE*.

Testing the KS Resistance

1. Remove parts required to access knock sensor,
2. Disconnect the knock sensor connector.

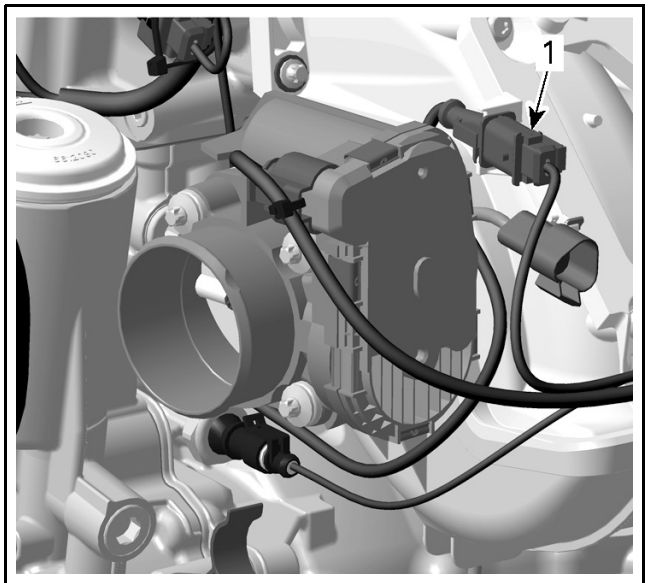

smr2016-016-013_b

1. KS connector

3. Measure the resistance between the knock sensor terminals.

REQUIRED TOOL	
FLUKE 115 MULTIMETER (P/N 529 035 868)	

Set multimeter to Ω.

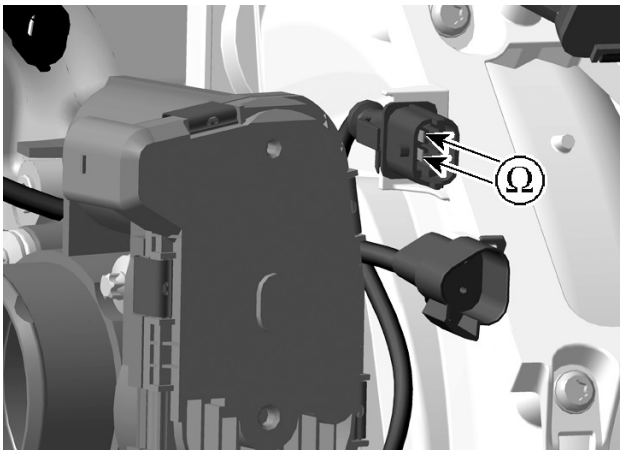

smr2016-027-015_a

KNOCK SENSOR RESISTANCE @ 20°C (68°F)
Approximately 5 MΩ

If resistance is not as specified, replace knock sensor.

If resistance is as specified, carry on with the following steps.

4. Reconnect the knock sensor connector.
5. Disconnect ECM-A connector.
6. Check circuit resistance through the knock sensor as per following table.

REQUIRED TOOL	
ECM ADAPTER TOOL (P/N 529 036 166)	

Install ECM connector on ECM adapter.

ECM ADAPTER		MEASUREMENT
PIN		RESISTANCE @ 20°C (68°F)
A-C3	A-G2	Approximately 5 MΩ

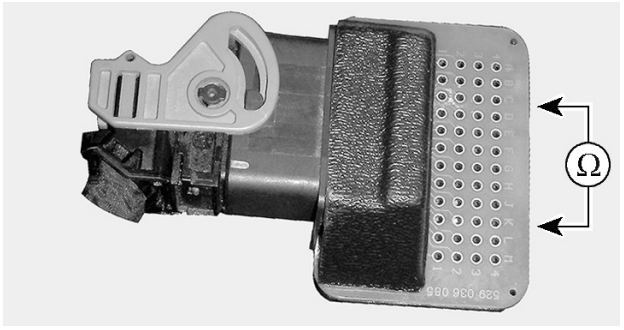

vmr2008-022-005_a

If wiring harness is good, check ECM. Refer to *ENGINE CONTROL MODULE (ECM)* in this section.

If an open circuit is measured, repair or replace wiring and connectors between ECM and knock sensor.

KS Replacement

KS Replacement

1. Disconnect KS sensor connector.

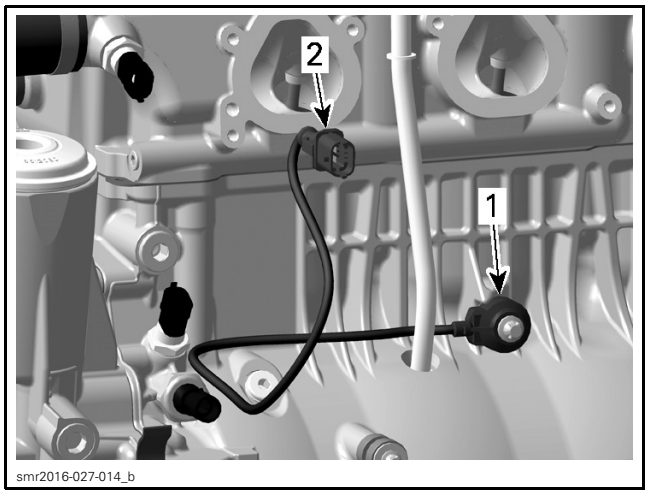

TYPICAL - INTAKE MANIFOLD REMOVED
1. Knock sensor
2. Knock sensor connector

2. Unscrew and remove knock sensor from engine.
3. Clean contact surfaces.
4. Apply thread locker in threaded hole.
5. Install the new knock sensor and tighten retaining screw to specification.

NOTICE **Improper torque may interfere with knock sensor operation and lead to severe internal engine damage.**

TIGHTENING TORQUE	
Service product	LOCTITE 243 (BLUE) (P/N 293 800 060)
KS retaining screw	23 N•m ± 3 N•m (17 lbf•ft ± 2 lbf•ft)

6. Reconnect knock sensor connector.
7. Reinstall remaining removed parts, refer to applicable subsections.

FUEL TANK AND FUEL PUMP

SERVICE TOOLS

Description	Part Number	Page
DIAGNOSTIC HARNESS	529 036 188	13
ECM ADAPTER TOOL	529 036 166	9
FLUKE 115 MULTIMETER	529 035 868	8, 14
FUEL HOSE ADAPTER	529 036 023	7
FUEL PUMP MODULE SOCKET	529 036 125	11
FUEL TANK TEST CAP	529 036 242	5
FUEL TANK TEST CAP (FLIP)	529 036 244	5
OETIKER PLIERS	295 000 070	8
PRESSURE GAUGE	529 035 709	7
VACUUM/PRESSURE PUMP	529 021 800	5

FUEL TANK AND FUEL PUMP

Models Without Suspension

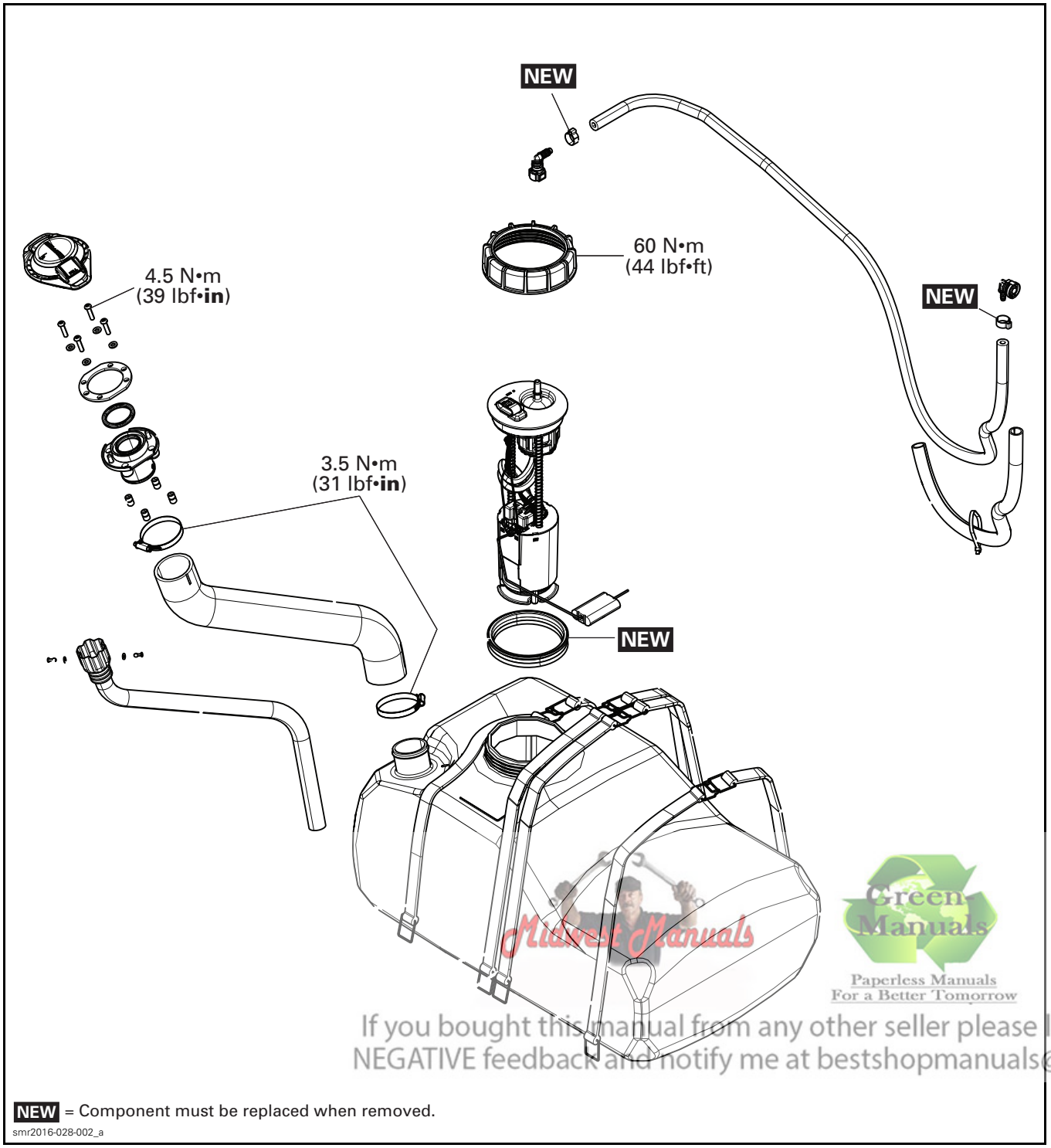

Midwest Manuals
Green Manuals
Paperless Manuals
For a Better Tomorrow
If you bought this manual from any other seller please leave them
NEGATIVE feedback and notify me at bestshopmanuals@gmail.com

NEW = Component must be replaced when removed.

smr2016-028-002_a

FUEL TANK AND FUEL PUMP

Models With Suspension

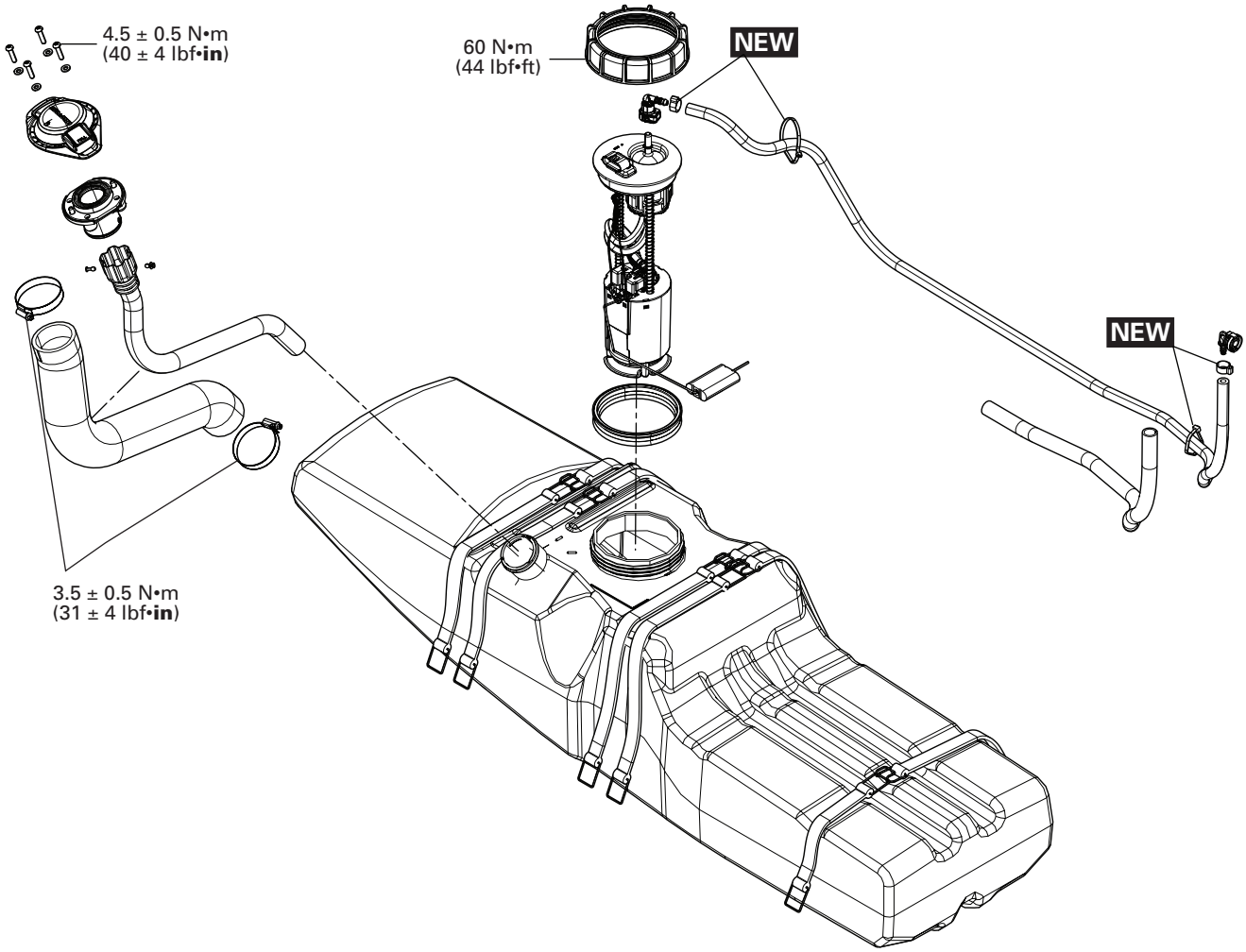

NEW = Component must be replaced when removed.

smr2016-028-001_a

GENERAL

⚠ WARNING

Fuel lines remain under pressure at all times. Always proceed with care and use appropriate safety equipment when working on a pressurized fuel system. Wear safety glasses.

⚠ WARNING

Always disconnect battery prior to working on the fuel system. Fuel vapors are flammable and explosive under certain conditions. Always work in a well ventilated area. Do not allow fuel to spill on hot engine parts and/or on electrical connectors. Proceed with care when removing/installing high pressure test equipment or disconnecting fuel line connections. Cover the fuel line connection with an absorbent shop rag. Wipe off any fuel spillage in the bilge.

⚠ WARNING

When the repair is completed, ensure that hoses and connections from fuel rail to the fuel pump are properly secured. Then, pressurize the fuel system. After carrying out a fuel pump pressure test, use the valve on the fuel pressure gauge to release the pressure (if so equipped).

⚠ WARNING

The fuel pump is energized for a few seconds each time the START button is depressed. It builds fuel system pressure very quickly. Prior to pressing the START button, ensure there are no disconnected or damaged fuel lines that may leak fuel. A high pressure leak test must be carried out whenever a fuel system component has been disconnected.

⚠ WARNING

Ensure wires and hoses are routed and secured away from any vibrating, rotating, moving or hot components or sharp edges. Use appropriate shields and fastening devices as per factory standards.

NOTICE Whenever repairing the fuel system, always check for water infiltration in the fuel tank. Replace any damaged, leaking or deteriorated fuel line.

SYSTEM DESCRIPTION

The fuel system is comprised of:
- A fuel tank
- A vented fuel tank cap
- A fuel pump module mounted inside the fuel tank
- A fuel vent system, and
- A variety of hoses.

The fuel pump module is basically comprised of:
- An electric fuel pump mounted inside a canister type pump reservoir
- A lower inlet filter
- An upper outlet filter
- A pressure regulator
- A float type fuel level sensor.

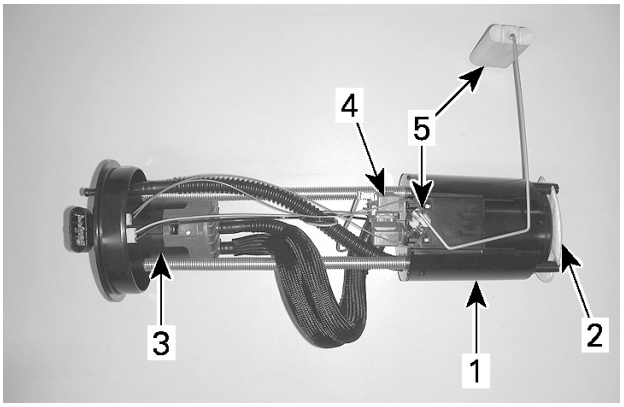

smr2008-022-007_a

FUEL PUMP MODULE
1. *Fuel pump reservoir*
2. *Lower inlet filter*
3. *Upper outlet filter*
4. *Fuel pressure regulator*
5. *Float type fuel level sensor*

Fuel Pump Operation

When the pump is in operation, it draws fuel into the canister through a lower inlet filter and a disk type valve.

The pressurized fuel is pushed through an upper outlet filter to the fuel rail.

Excess fuel pressure generated by the pump is routed from the upper filter back to the pump canister reservoir by a pressure regulator mounted on the pump reservoir cover.

When the START button is pressed, the electrical system is powered. The fuel pump will come on for approximately 2 seconds to pressurize the fuel rail in preparation for the engine start.

The ECM supplies the ground signal to turn on the fuel pump motor.

The pressure regulator will ensure appropriate fuel pressure is supplied to the injectors.

When the ECM receives a signal to shut down the engine (START/STOP switch, engine cut-off switch, or T.O.P.S. switch) it removes the fuel pump ground signal.

Fuel Level Indication

An electric float type fuel level sensor is mounted on the side of the fuel pump reservoir. As the float moves with changing fuel levels, it varies a resistance that changes the voltage signal coming from the information center (multifunction gauge). This signal is representative of the fuel level.

The information center interprets the fuel level voltage signal that comes back from the fuel level sensor. It then displays the proper fuel level in the information center and a low fuel warning message when required.

The information center will also trigger the beeper which produces the appropriate beep signal to warn the driver of a low fuel condition.

The fuel level sensor resistance is at its lowest value when the fuel tank is full, and at its highest value when the tank is empty.

Refer to the *FUEL LEVEL SENSOR* in this subsection for fuel level sensor testing procedures.

Fuel Tank Venting

The entire vent system is incorporated within the fuel tank cap.

⚠ WARNING

If the cap requires replacement, it must be replaced with an approved vented cap of the same type supplied by BRP. Use of any other cap, or use of a non-vented cap will not allow proper venting of the fuel tank. The result may be engine fuel starvation, fuel tank overpressure, or fuel leaks which could lead to a fire or an explosion.

INSPECTION

TESTING FUEL TANK FOR LEAKS

1. Visually inspect condition of hoses and clamps.
2. Remove/open fuel tank cap.
3. Fill up fuel tank.
4. Install test cap on filler neck.
5. Use the following tool to pressurize fuel tank.

REQUIRED TOOL	
VACUUM/PRESSURE PUMP (P/N 529 021 800)	
FUEL TANK TEST CAP (P/N 529 036 242)	
FUEL TANK TEST CAP (FLIP) (P/N 529 036 244)	

NOTE: A Y-fitting and a check valve can be installed to use compressed air for quick pressure build-up when the fuel tank is not full.

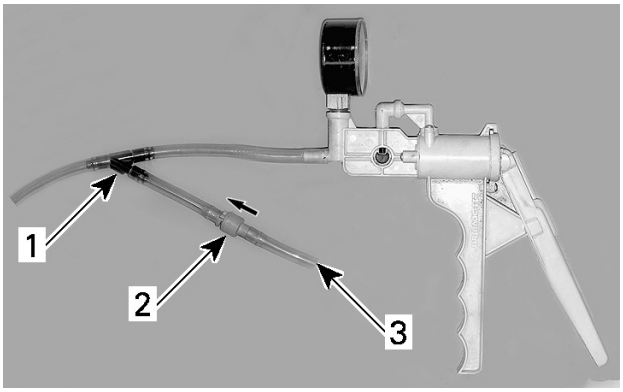

mmr2009-121-004_a

1. Y-fitting (P/N 293 710 059)
2. Check valve (P/N 275 500 505)
3. Apply compressed air here

6. Install the applicable fuel tank test cap.

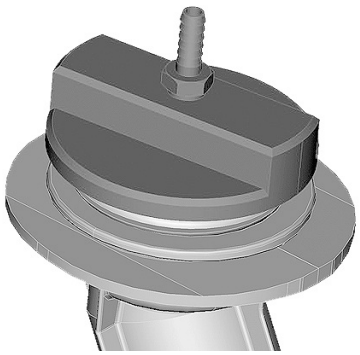

sbs2015-007-002

SCREW TYPE TEST CAP

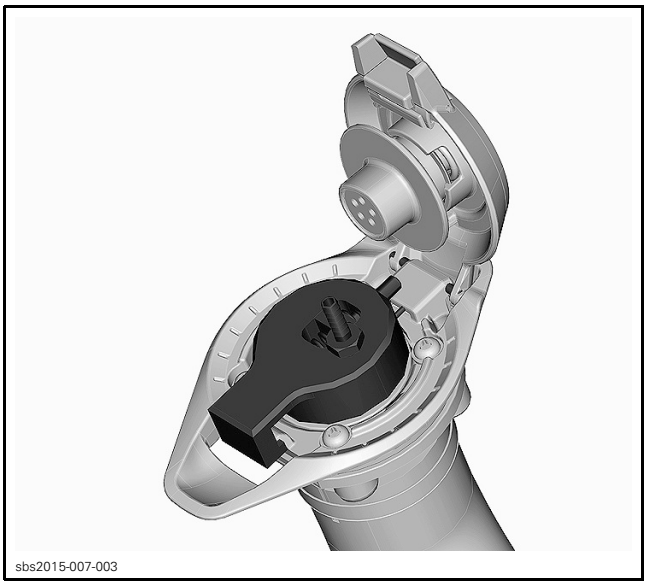

FLIP TYPE TEST CAP

7. Connect the vacuum/pressure pump to the nipple of fuel tank test cap.
8. Set vacuum/pressure pump to PRESSURE.

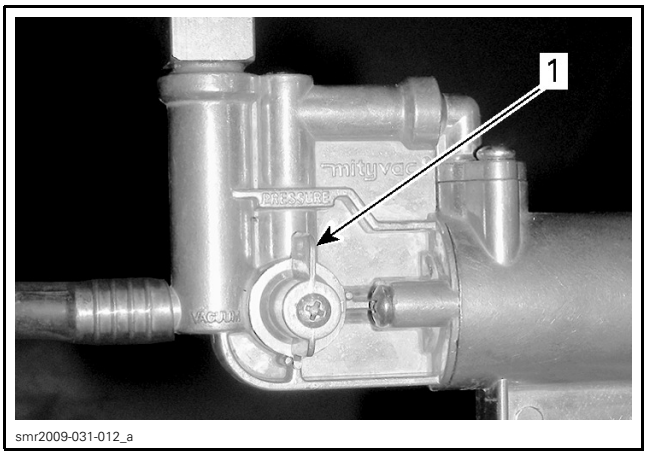

1. *Pressure selected*

9. Pressurize fuel tank to specification.

NOTICE **Do not exceed the specification when pressurizing the fuel tank.**

FUEL TANK LEAK TEST	
PRESSURE	TIME WITHOUT PRESSURE DROP
21 kPa (3 PSI)	10 minutes

If the pressure drops, locate fuel leak(s), repair/replace leaking component(s) and retest.

Possible leak areas are:

– Filler neck, hose and connections
– Fuel tank
– Fuel tank neck
– Fuel pump gasket
– Fuel pump check valve (unlikely)

To locate a leak, check for a fuel smell or leaking fuel.

If a leak is not visible, spray a soapy water solution on components to ease locating the leak(s); bubbles will indicate the leak location(s).

NOTE: If the pressure drops and no leak has been found, it is possibly fuel pump check valve.

NOTICE **When the fuel system leak test is completed, thoroughly rinse all components of the soapy water solution with clear water. A soapy water residue may cause premature deterioration and must be rinsed away.**

⚠ WARNING

If a leak is found, do not start the engine. Wipe off any fuel that leaked and ventilate the hull thoroughly to remove any accumulated fuel vapors. Do not use electric powered tools on watercraft unless system has passed the leak test.

10. Remove test cap.

TESTING FUEL PUMP PRESSURE

Preparation

The pressure test will show the available pressure at the fuel pump outlet. It validates the pressure regulator, the fuel pump and check valve and it tests for leaks in the system.

1. Ensure the battery is fully charged, refer to *CHARGING SYSTEM*.
2. Ensure hoses and fittings are not leaking. Repair any leaks.
3. Ensure there is enough gas in the fuel tank.
4. Disconnect the pressure outlet hose from the fuel pump.

⚠ WARNING

Cover the fuel line connection with an absorbent shop rag. Wipe off any fuel spillage inside the bilge.

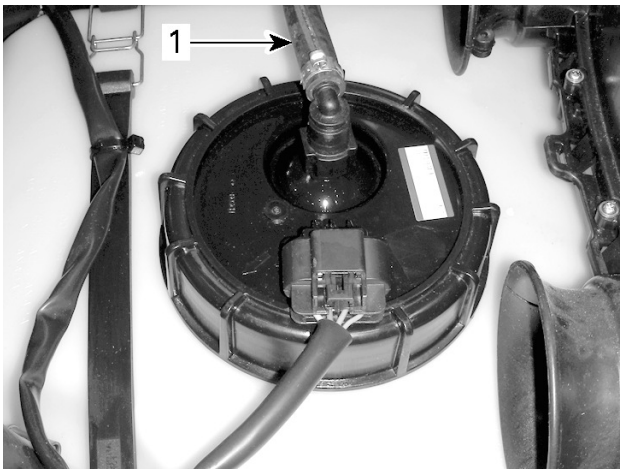

smr2012-027-010_a

1. Outlet hose

5. Install pressure test tools between disconnected hose and fuel pump fitting (in line installation).

REQUIRED TOOLS	
PRESSURE GAUGE (P/N 529 035 709)	
FUEL HOSE ADAPTER (P/N 529 036 023)	

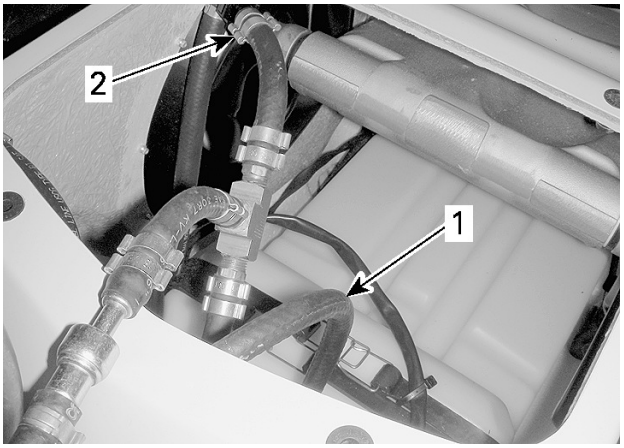

smr2009-031-018_a

TYPICAL
1. Connect to fuel pump
2. Connect to outlet hose

Test when Engine Is Stopped

1. Remove tether cord from the engine cut-off switch to prevent engine starting.
2. Press the START button and observe fuel pressure.
3. Release pressure in system using the valve on the pressure gauge between each test so that the reading returns to zero (0).
4. Repeat test twice and compare readings to specifications in following table.

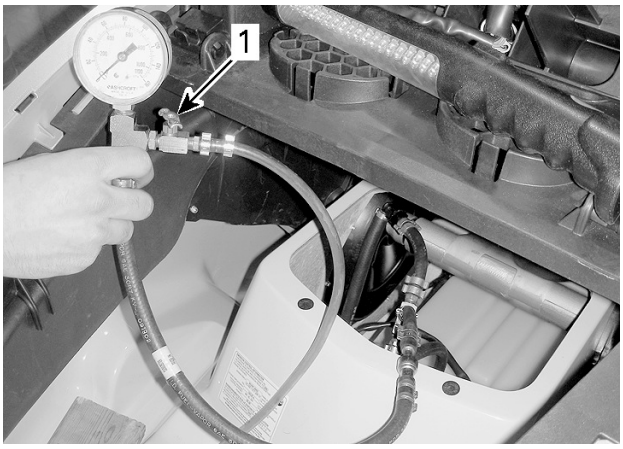

smr2009-031-019_a

FUEL PUMP PRESSURE TEST
1. Valve on gauge

MODELS	FUEL PRESSURE (WHEN PRESSING THE START BUTTON)
All	386 kPa - 414 kPa (56 PSI - 60 PSI)

Test when Cranking or Starting Engine

1. **Crank or start engine** and observe fuel pressure. The fuel pressure should be the same as in previous test.

If pressure is good, fuel pump and pressure regulator are functioning correctly.

2. Stop the engine.

A rapid pressure drop indicates leakage either from the fuel rail or from the fuel pump check valve. Check fuel rail for leaks.

If a pressure drop occurs when pressing the START button and the fuel rail is not leaking, then replace the fuel pump module.

A slow pressure drop indicates leakage either from a fuel injector or from the fuel pressure regulator in the fuel pump module. To check fuel injectors for leaks, refer to the *ELECTRONIC FUEL INJECTION (EFI)* subsection. If injectors are not leaking, then replace fuel pump.

3. Release fuel pressure in system using the valve on the pressure gauge.
4. Remove pressure gauge and reinstall fuel hose on fuel pump module.

⚠ WARNING

Wipe off any fuel spillage in the bilge. Fuel is flammable and explosive under certain conditions. Always work in a well ventilated area.

5. Reinstall all other removed parts, refer to applicable subsections.

PROCEDURES

FUEL HOSES AND OETIKER CLAMPS

Inspecting Fuel Hoses

1. Inspect all fuel hoses for wear, kinks, cracks or any other types of damages.
2. Inspect all clamps for tightness.

Replacing Fuel Hoses

When replacing fuel hoses, be sure to use hoses and clamps as available from BRP parts department. This will ensure continued proper and safe operation.

⚠ WARNING

Use of fuel lines other than those recommended by BRP may compromise fuel system integrity.

⚠ WARNING

- **Never use a hose pincher on high pressure hoses.**
- **Never change the routing of a fuel hose.**
- **Always reinstall the corrugated protective tubing on fuel hoses.**
- **Secure fuel hoses using the appropriate locking tie or fastener to prevent contact with sharp edges or hot, rotating and moving parts.**
- **After connecting a hose or a quick connect fitting, pull on the hose near the fitting to make sure it is securely locked.**
- **Always validate fuel system tightness by testing fuel tank for leaks.**

Replacing Oetiker Clamps

REQUIRED TOOL	
OETIKER PLIERS (P/N 295 000 070)	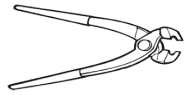

⚠ WARNING

Whenever removing a hose in the fuel system, always use new Oetiker clamps at assembly.

FUEL PUMP

Testing the Fuel Pump

1. Remove tether cord from the engine cut-off switch to prevent engine starting.
2. Press START button.
3. The fuel pump should run for 2 seconds to build up fuel system pressure.
4. If fuel pump runs, test the *FUEL PUMP PRESSURE* as described in this subsection.
5. If the fuel pump does not run:
   - Ensure ECM is powered. Refer to *ELECTRONIC FUEL INJECTION (EFI)* subsection.
   - Check fuse F18. If fuse is faulty, replace it and repeat test. If fuse is good, test the *FUEL PUMP INPUT VOLTAGE* in this subsection.

Testing Fuel Pump Pressure

Refer to *INSPECTION* in this subsection.

Testing Fuel Pump Input Voltage

1. Ensure the fuel pump fuse (F18) is in good condition.
2. Disconnect fuel pump harness connector. Refer to *FUEL PUMP REMOVAL*.
3. Use the FLUKE 115 MULTIMETER (P/N 529 035 868).
4. Select Vdc.
5. Press the START button.
6. Read voltage at fuel pump harness connector as per following table.

INPUT VOLTAGE TEST		
TEST PROBES		VOLTAGE
Pin B (+ probe)	Battery ground (- probe)	Battery voltage

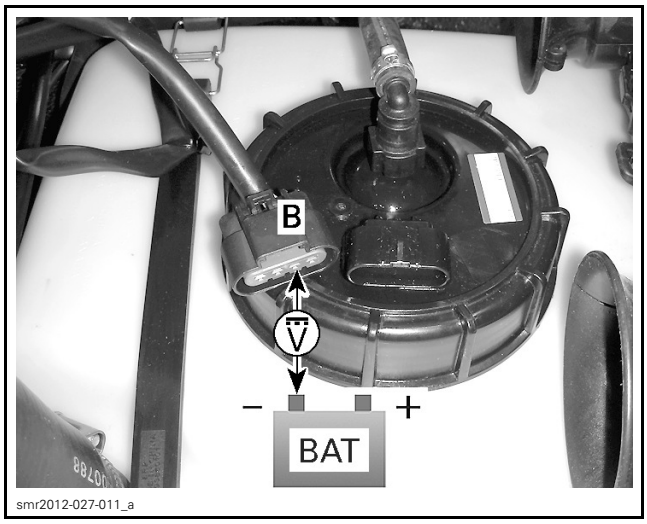

FUEL PUMP INPUT VOLTAGE TEST

If battery voltage is read, power circuit is good. Test the *FUEL PUMP CIRCUIT*.

If battery voltage is not read, power circuit is faulty. Test continuity of power circuit wiring between fuse box and fuel pump. Test the *FUEL PUMP CIRCUIT* in this subsection.

Testing Fuel Pump Circuit

1. Reconnect the fuel pump harness connector.
2. Remove cover of fuse box.
3. Remove the long bus bar.

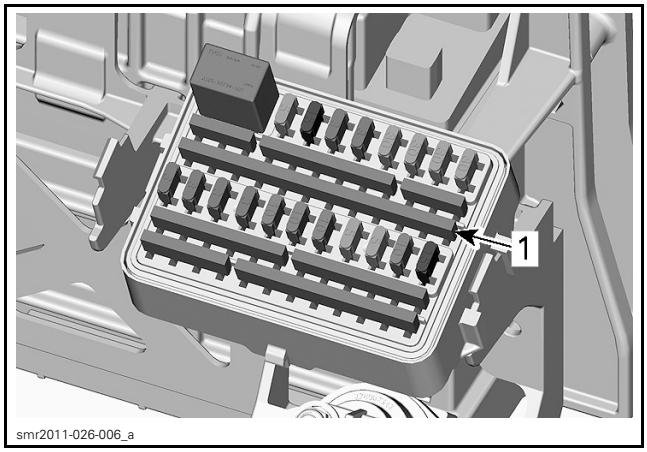

1. Long bus bar

4. Remove ECM connector "B" and install it on the ECM ADAPTER TOOL (P/N 529 036 166).

5. Set multimeter to Ω and test pump circuit as per following table.

PUMP CIRCUIT TEST THROUGH FUEL PUMP		
TEST PROBES		RESISTANCE @ 20°C (68°F)
Fuse box terminal D2	ECM connector B pin B-M1	Approx. 12 Ω

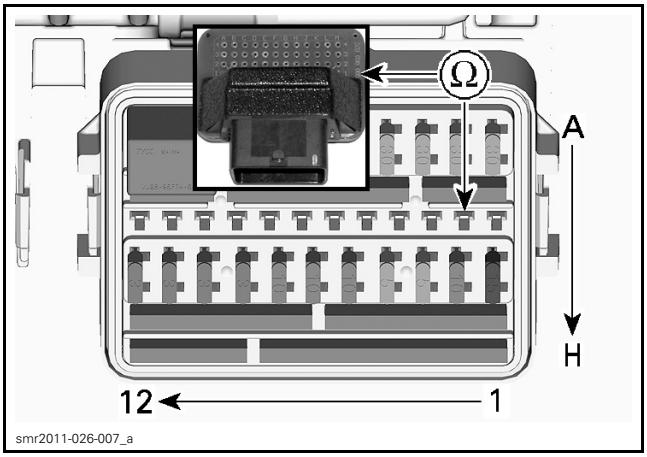

6. If test succeeded, the fuel pump, its fuse and its wiring harness are good.
7. If test failed, test wiring continuity as per table.

FUEL PUMP HARNESS CONTINUITY TEST (WIRING ONLY)		
TEST PROBES		RESISTANCE @ 20°C (68°F)
Pump harness connector pin B	Fuse box terminal F2	Close to 0 Ω (continuity)
Pump harness connector pin A	ECM connector B pin B-M1	

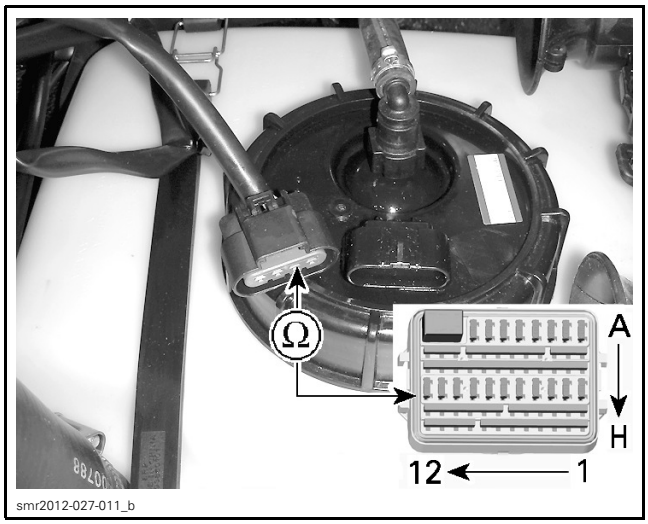

smr2012-027-011_b

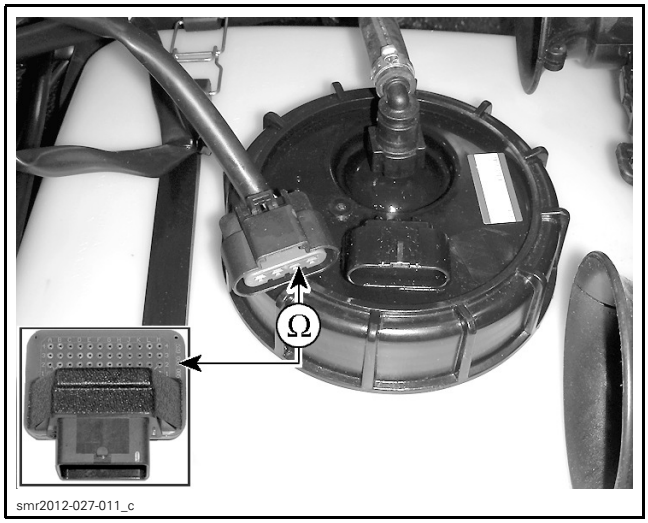

smr2012-027-011_c

If there is an open circuit to FB-F2, repair wiring/connector between fuel pump and fuse box.

If there is good continuity to FB-F2 and fuel pump fuse (F18) is good, check continuity of the wire jumper between D2 and E2. Repair or replace wiring as required.

If every test succeeded and fuel pump still does not work, try a new ECM. Refer to *ELECTRONIC FUEL INJECTION (EFI)* subsection.

Removing the Fuel Pump

1. Open front storage compartment cover.
2. Remove storage bin or partitions. Refer to *BODY* subsection.

Models with Suspension

3. Remove front ventilation box.

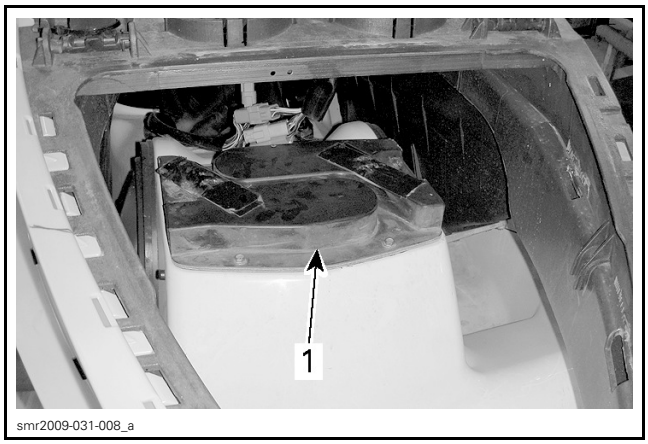

smr2009-031-008_a

1. Ventilation box

4. Lift suspension to gain access.

NOTE: If more height is required or if the suspension cannot be used, manually lift suspension by the anchor points close to handlebar and safely lock in this position. Do not lift the watercraft from the anchor points.

Models Without Suspension

5. Disconnect the top of the two front air ventilation hoses, refer to *BODY* subsection.

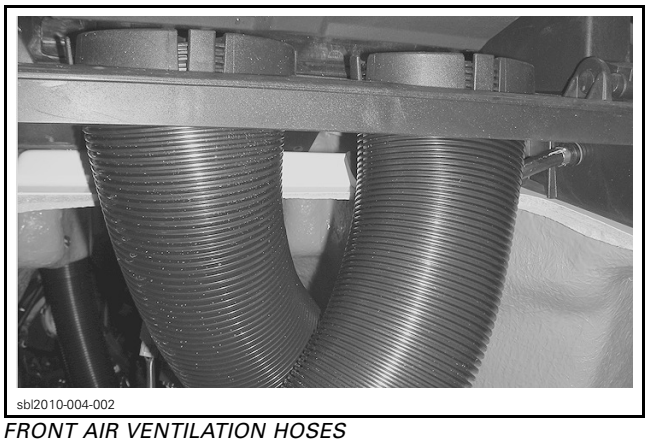
sbl2010-004-002

FRONT AIR VENTILATION HOSES

All Models

6. Disconnect the negative battery terminal, refer to *CHARGING SYSTEM* subsection.
7. Disconnect fuel pump electrical connector.
8. Disconnect the vent tube from the fuel pump.
9. Wrap shop rags around the high pressure fuel hose fitting, then press on the release button of the quick connect fitting and disconnect the hose.

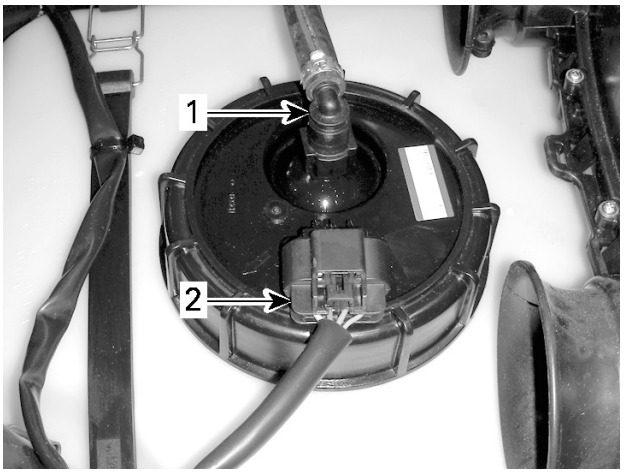

smr2012-027-010_b

1. *Quick connect fitting (high pressure fuel hose)*
2. *Harness connector*

10. Unscrew the fuel pump retaining nut.

REQUIRED TOOL	
FUEL PUMP MODULE SOCKET (P/N 529 036 125)	

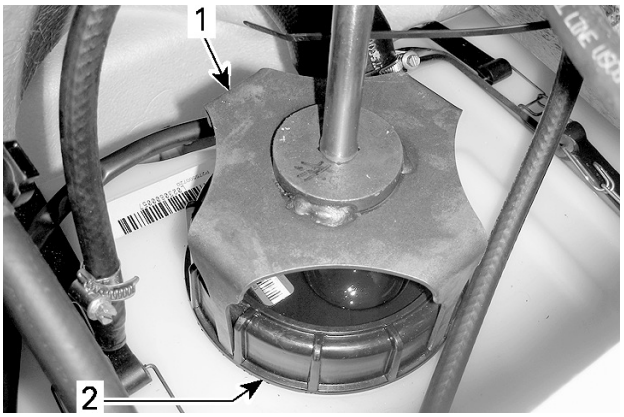

smr2009-031-022_a

1. *Fuel pump module socket*
2. *Fuel pump retaining nut*

NOTICE **While pulling out the fuel pump module, pay attention to the corrugated tubes and fuel sensor float arm. Float arm can get caught up and bend which will reduce fuel sensor accuracy. If fuel pump module is dropped or damaged, it must be replaced.**

11. Slowly pull fuel pump module up through opening until corrugated tubes contact sides of opening. Tilt the fuel pump module as you slowly pull the pump upwards.

⚠ WARNING

The upper filter and fuel pump reservoir on the fuel pump module contain fuel which will drain out when fuel pump module is not in an upright position.

12. Carefully pull fuel pump module out.

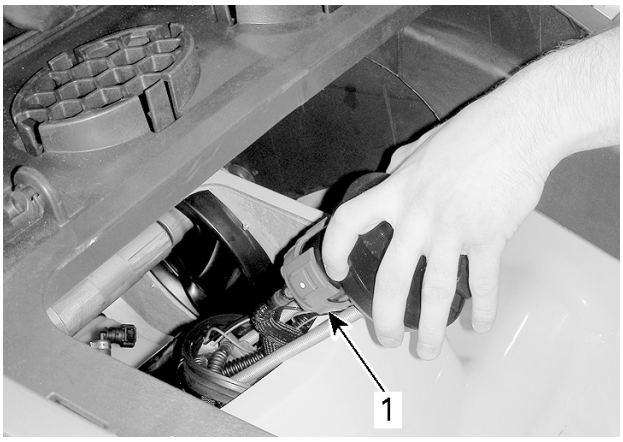

smr2009-031-023_a

iS MODEL SHOWN

1. *Pull out fuel pump module*

⚠ WARNING

Always wipe off any fuel spillage from the watercraft. When working with fuel or fuel system and its components, always work in a well ventilated area.

Installing the Fuel Pump

Reverse the removal procedure however, pay attention to the following.

1. Carefully insert fuel pump module in fuel tank so as not to bend float arm.
2. Install a NEW fuel pump module gasket each time the module is reinstalled.

NOTE: Wipe off parts to prevent fuel pump from turning while torquing fuel pump nut.

3. Align arrow on top of fuel pump module with index mark on top of fuel tank or fuel sensor accuracy will be affected.

NOTE: Index mark and arrow locations are highlighted for clarity in following illustration.

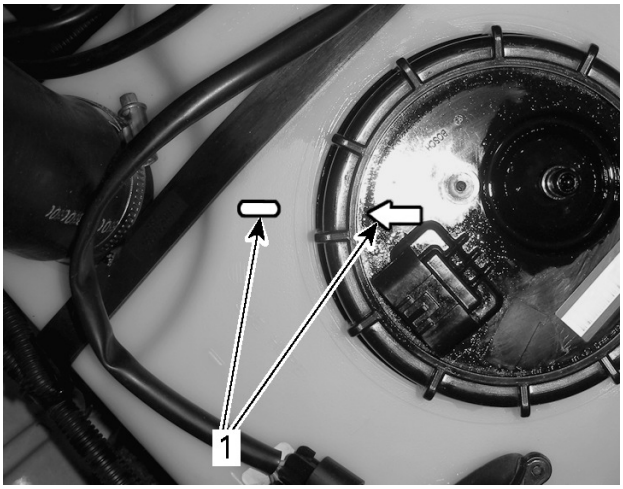

FUEL PUMP MODULE INDEXING
1. Align marks

4. Tighten fuel pump nut.

TORQUE	
Fuel pump nut	60 N•m (44 lbf•ft)

5. Test the fuel tank for leaks. Refer to *TESTING FUEL TANK FOR LEAKS*.

FUEL FILTER

Inspecting the Fuel Filter

Inspect fuel filter. If dirty, partially clogged or damaged, replace it.

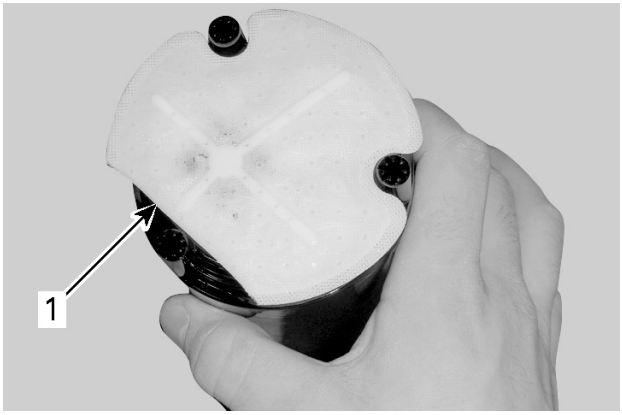

1. Fuel filter

Removing the Fuel Filter

NOTE: The lower fuel filter on the fuel pump module does not require replacement under normal operating conditions. Replace only if permanently clogged or damaged.

1. Remove fuel pump. Refer to *FUEL PUMP* in this subsection.

⚠ WARNING

The upper filter and fuel pump reservoir on the fuel pump module contain fuel which will drain out when fuel pump module is not in an upright position.

2. Turn fuel pump upside down.
3. Using a small flat screwdriver, pry up the filter locking tabs.

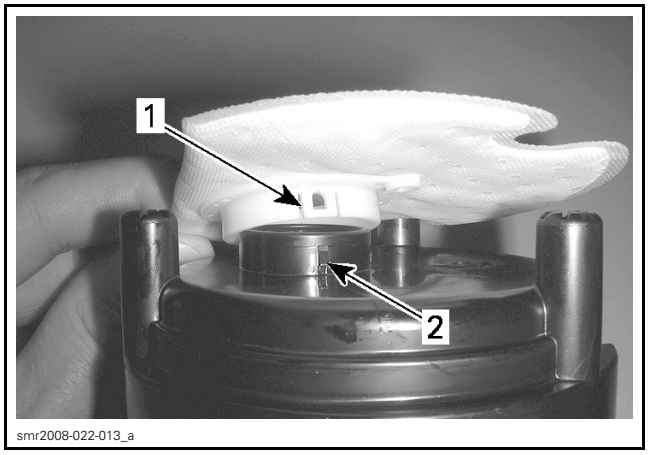

1. Fuel filter locking tab (x2)
2. Filter locking pin (x2)

4. Pull filter off fuel pump reservoir housing.

Installing the Fuel Filter

1. Align new filter with pump reservoir housing.
2. Press new filter on by hand. Ensure it is fully seated and locked onto the pump reservoir housing.
3. Reinstall fuel pump as per procedure in this subsection.
4. Test the fuel tank for leaks. Refer to *TESTING FUEL TANK FOR LEAKS*.
5. Install all other removed parts, refer to applicable subsection.

FUEL LEVEL SENSOR

Fuel Level System Overview

A float type fuel level sensor mounted on the fuel pump module sends a signal to the information center.

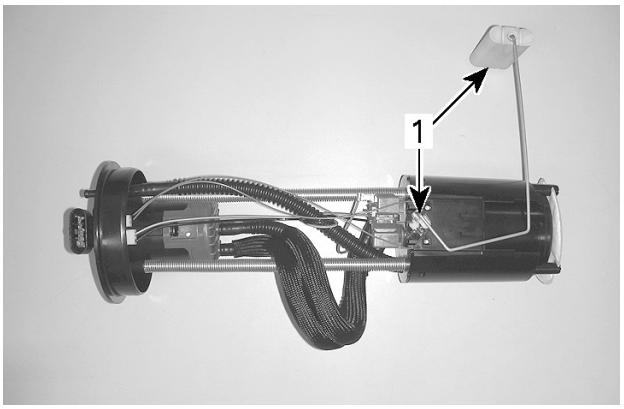

smr2008-022-007_b

TYPICAL — FUEL PUMP MODULE
1. Fuel level sensor

The information center interprets this signal and turns on the appropriate number of segments of a bar type fuel level indication in the lower RH side of the digital screen in the information center.

Troubleshooting the Fuel Level Sensor

FUEL LEVEL TROUBLESHOOTING	
SYMPTOM	POSSIBLE CAUSE
Fuel gauge always display EMPTY	– Wiring/connectors – Fuel level sensor – Float stuck in low position
Fuel gauge always display FULL	– Water in fuel pump connector – Float stuck in full position
Fuel level sensor fault code	– Wiring/connectors – Fuel level sensor
Fuel gauge displays wrong level	– Low battery voltage – Fuel level sensor fault

Use B.U.D.S. to check for a fault code. Refer to *DIAGNOSTIC AND FAULT CODES*.

Testing Fuel Level Sensor Voltage

1. First ensure battery is fully charged.

Models with Suspension

2. Lift suspension to gain access.

Models Without Suspension

3. Disconnect the top of the two front air ventilation hoses, refer to *BODY* subsection.

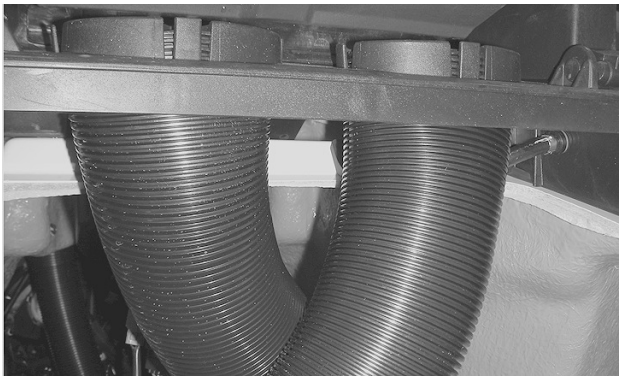

sbl2010-004-002

FRONT AIR VENTILATION HOSES

All Models

4. From under the steering support area, disconnect the 24-pin connector.

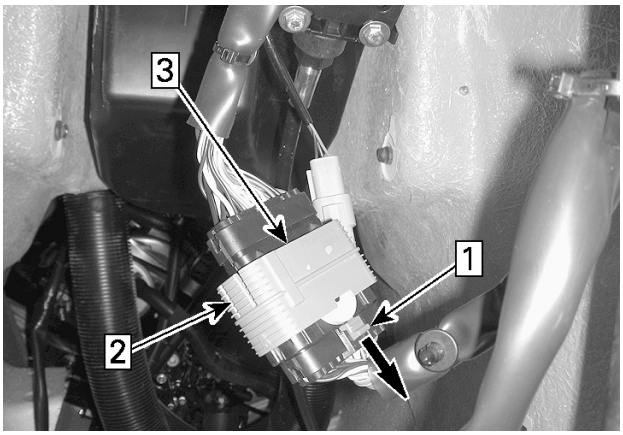

sbl2010-034-018_b

24-PIN STEERING CONNECTOR DISCONNECT
Step 1: Pull out safety lock
Step 2: Press in on release tab
Step 3: Pull locking collar down

5. Connect the DIAGNOSTIC HARNESS (P/N 529 036 188) to make an in-line connection between the disconnected connector.

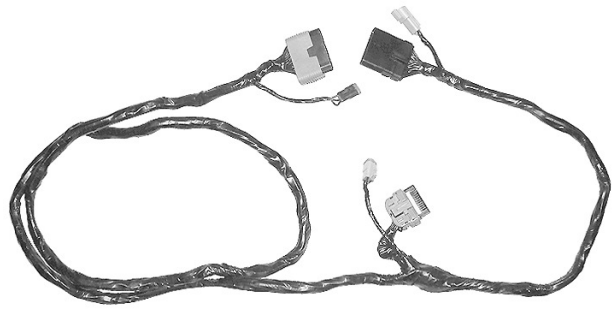

529036188

6. Briefly press the START button to wake up the ECM.
7. Install the tether cord on the engine cut-off switch.

8. Use the FLUKE 115 MULTIMETER (P/N 529 035 868) and select Vdc.
9. Measure the voltage at the test connector of the diagnostic harness as follows.

FUEL TANK LEVEL	TEST CONNECTOR OF DIAGNOSTIC HARNESS	VOLTAGE
Full	Pins 5 and 17	0.14 Vdc
Empty		2.7 Vdc

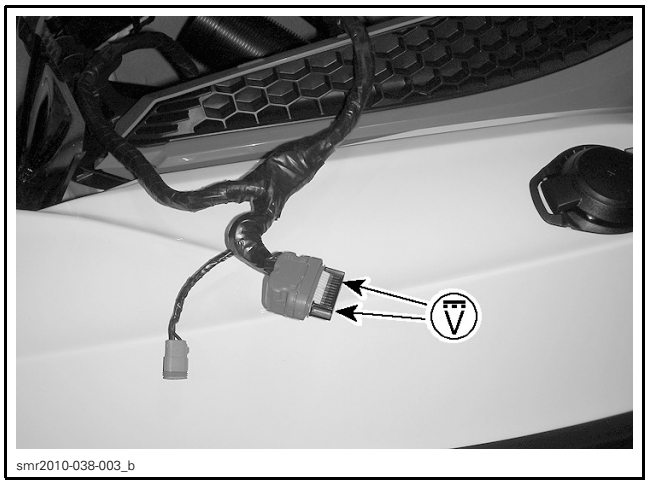

smr2010-038-003_b

TEST CONNECTOR OF DIAGNOSTIC HARNESS

NOTE: Voltage could be slightly different depending on battery voltage but should remain relatively close to this range. If fuel tank is not full or empty, the voltage value will be proportional to the fuel level (somewhere in-between).

If voltage is as per specifications the fuel level circuit and sensor are good. If fuel level does not work in information center, try a new one.

If voltage is out of specifications, test the *FUEL LEVEL SENSOR RESISTANCE AT INFORMATION CENTER* as described in this subsection.

Remove diagnostic harness and reconnect connector.

Testing Fuel Level Sensor Resistance at Information Center

1. Disconnect information center (multifunction gauge) connector. Refer to *GAUGE* subsection.

NOTICE **Pull connector lock out. Do not twist the screwdriver.**

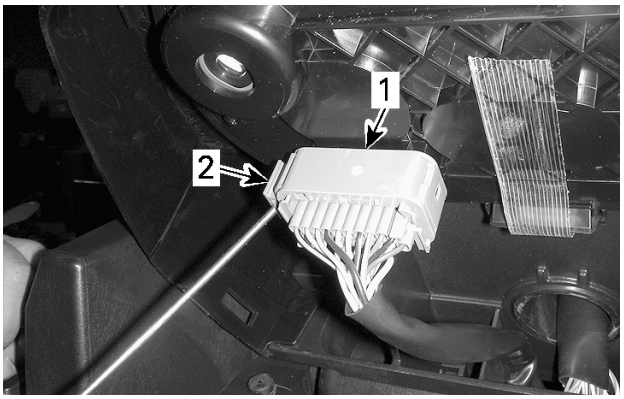

smr2009-042-002_a

1. Gauge connector
2. Pull out to unlock connector

2. Use the FLUKE 115 MULTIMETER (P/N 529 035 868) and select Ω.
3. Alternately drain then fill fuel tank and measure the sensor resistance between pins 19 and 20 as follows.

RESISTANCE (Ω)	FLOAT HEIGHT
4.8 ± 2.2	Maximum (FULL)
47.8 ± 2.2	Middle (HALF)
89.8 ± 2.2	Minimum (EMPTY)
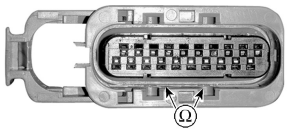	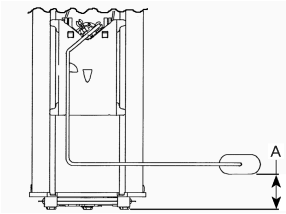 A. Float height

NOTE: If fuel tank is not full or empty, the resistance value will be proportional to the fuel level (somewhere in-between).

If readings are as per specifications, the fuel level circuit and sensor are good. If fuel level does not work in information center, try a new one.

If readings are out of specifications, test the *FUEL LEVEL SENSOR RESISTANCE AT FUEL PUMP*.

If an open circuit is measured, carry out a continuity test of the wiring from the information center to the 24-pin steering connector, and from the 24-pin steering connector to the fuel pump module connector. Refer to *WIRING DIAGRAM*.

If the wiring is good, test *FUEL LEVEL SENSOR RESISTANCE AT FUEL PUMP*.

4. Reconnect information center (multifunction gauge) connector.

Testing Fuel Level Sensor Resistance at Fuel Pump

1. Disconnect fuel pump module connector.

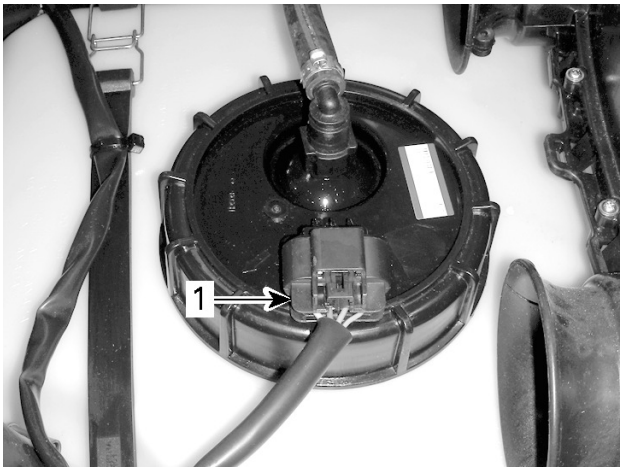

smr2012-027-010_c

FUEL PUMP MODULE
1. Fuel pump module connector

2. Alternately drain then fill fuel tank and measure the sensor resistance between pins "C" and "D" of the fuel pump connector. See table in *TESTING FUEL LEVEL SENSOR RESISTANCE AT INFORMATION CENTER*.

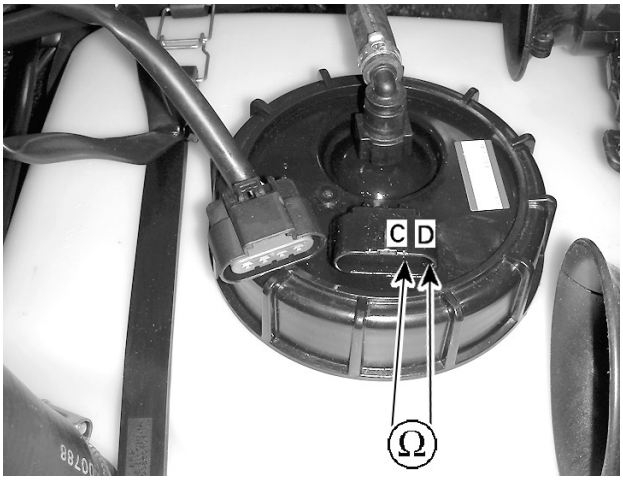

smr2012-027-011_d

FUEL LEVEL SENSOR RESISTANCE TEST

If readings are out of specifications, replace sensor.

When everything else has been tested and fuel level is still not working, try a new information center.

Removing the Fuel Level Sensor

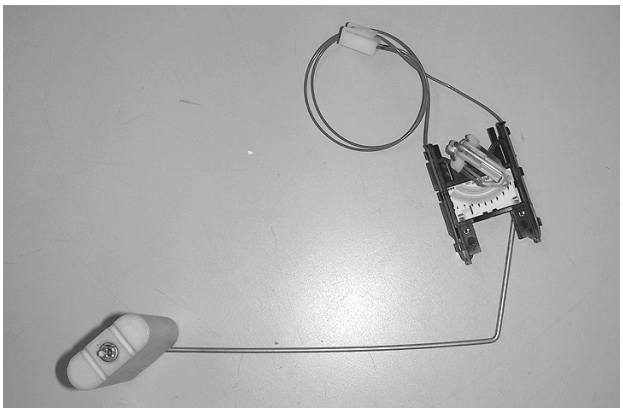

smr2008-022-029

FUEL LEVEL SENSOR

1. Remove fuel pump module from fuel tank, see *FUEL PUMP REMOVAL* in this subsection.

⚠ WARNING

The upper filter and fuel pump reservoir on the fuel pump module contain fuel which will drain out when fuel pump module is not in an upright position.

2. Drain all fuel from the upper fuel filter and fuel pump reservoir in an appropriate container.

NOTE: Note routing of fuel level sensor wires prior to disconnecting the sensor from the fuel pump module flange.

3. Disconnect the fuel level sensor connector from the fuel pump module upper flange.

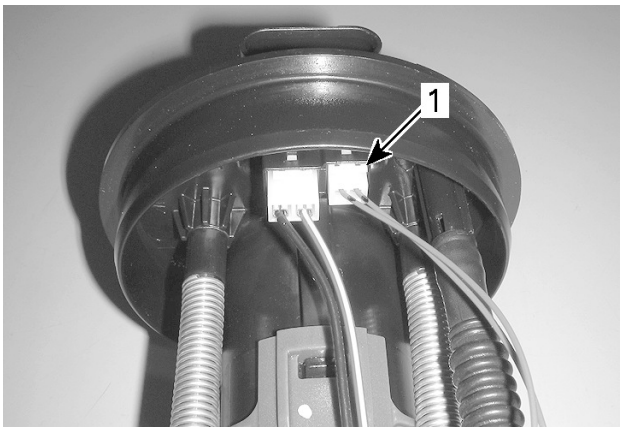

smr2008-022-021_a

1. Fuel level sensor connector

4. Disconnect the ground wire from the pressure regulator. Be careful not to bend the ground contact on the pressure regulator.

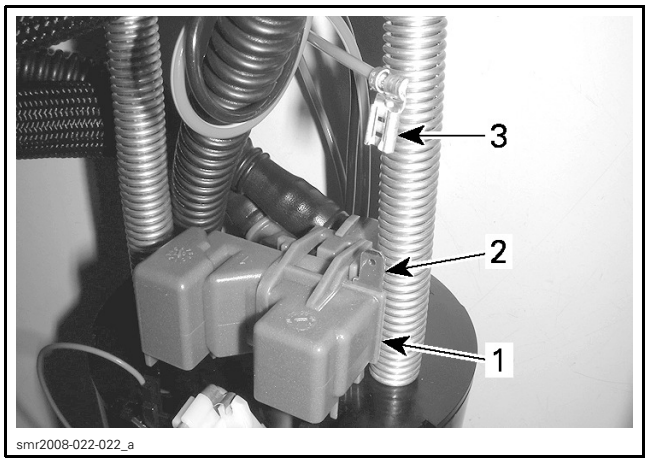

1. *Pressure regulator*
2. *Ground wire contact on pressure regulator*
3. *Ground wire disconnected*

5. Using a flat screwdriver, press down on the locking tab just below the pressure regulator to release it from the pump reservoir cover, and rotate it clockwise simultaneously so that it slips over the locking tab.

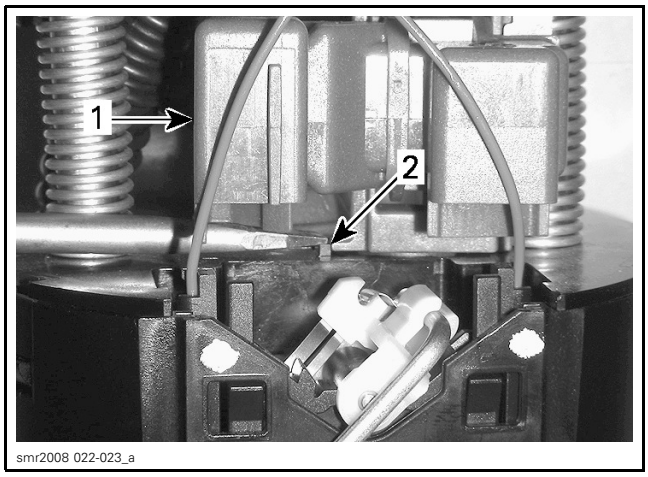

1. *Pressure regulator*
2. *Pressure regulator locking tab*

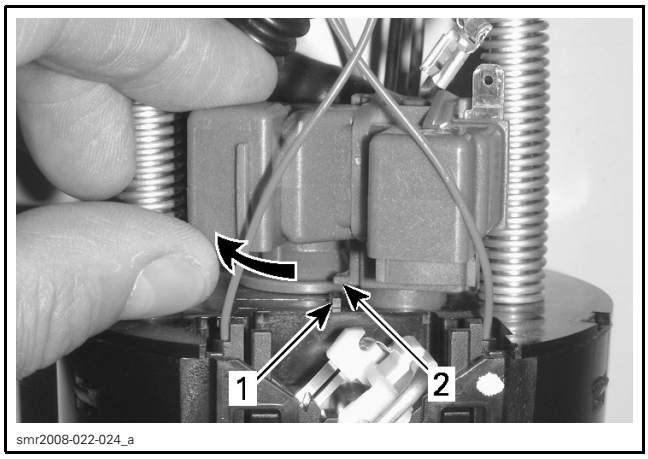

1. *Pressure regulator locking tab*
2. *Pressure regulator rotated clockwise over locking tab*

6. Once the pressure regulator is rotate over the locking tab, pull up on it to remove it from the pump reservoir cover.

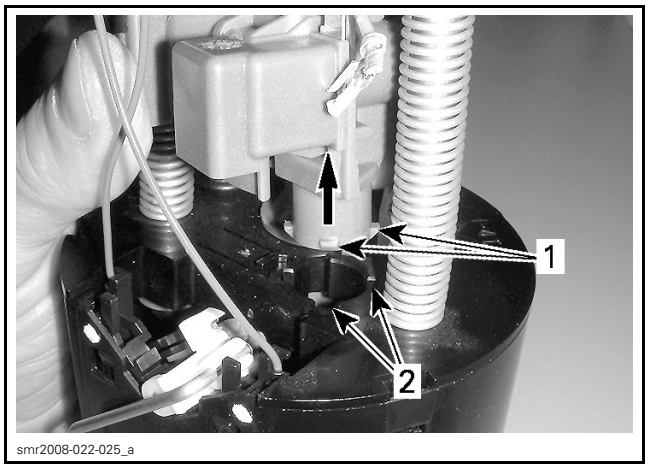

1. *Pressure regulator alignment tabs*
2. *Fuel pump reservoir alignment tabs*

NOTE: The pressure regulator cover must not be removed from the pressure regulator housing assembly.

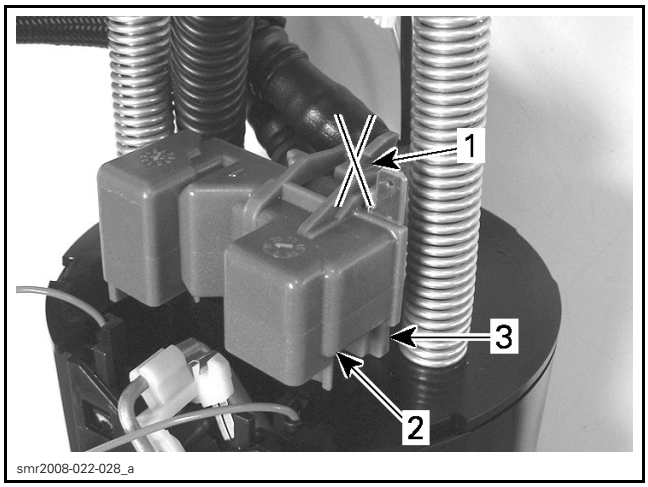

1. *Do not remove pressure regulator cover at locking tabs*
2. *Pressure regulator cover*
3. *Pressure regulator housing*

7. Push in on the release tabs at the top of the fuel level sensor to unlock it from the fuel pump reservoir housing, and simultaneously pull up on the fuel level sensor to remove it.

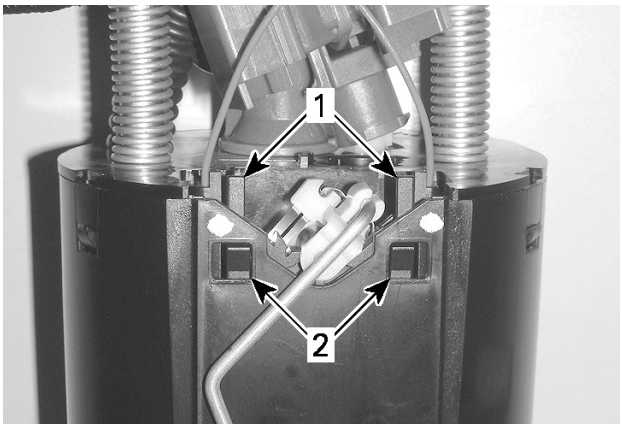

smr2008-022-026_a

1. *Fuel level sensor release tabs*
2. *Locking pins*

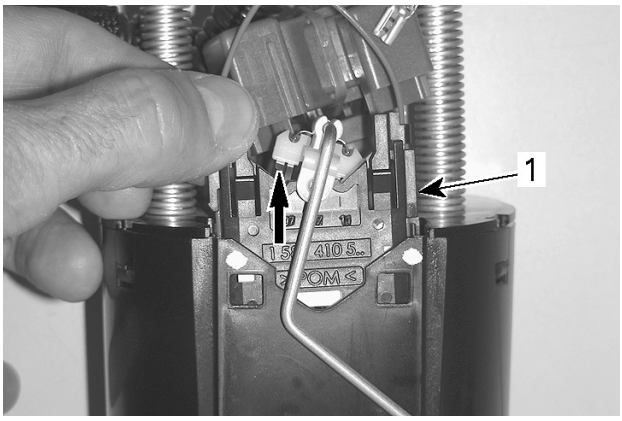

smr2008-022-027_a

1. *Pull up on fuel level sensor*

Installing the Fuel Level Sensor

Installation is the reverse of the removal procedure however, pay attention to the following.

1. Ensure fuel level sensor locking pins are properly engaged into the fuel pump reservoir.

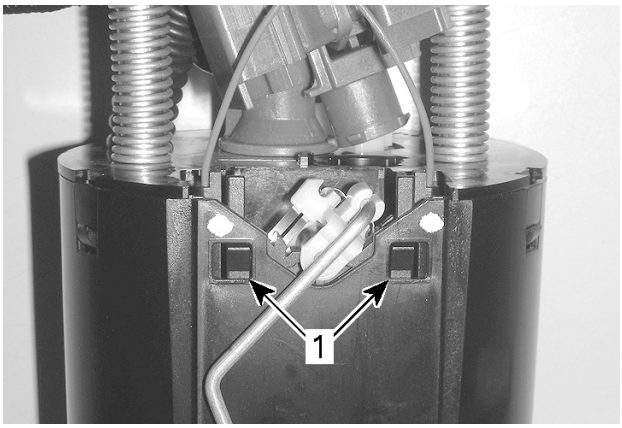

smr2008-022-026_b

1. *Ensure engagement of sensor locking pins*

2. Align the fuel pressure regulator tabs into the pump reservoir cover and turn it counterclockwise until it locks properly.

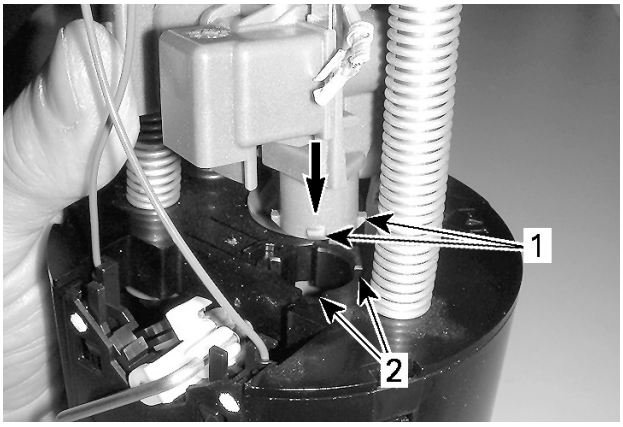

smr2008-022-025_b

PRESSURE REGULATOR INSERTION INTO PUMP RESERVOIR COVER

1. *Pressure regulator alignment tabs*
2. *Fuel pump reservoir alignment tabs*

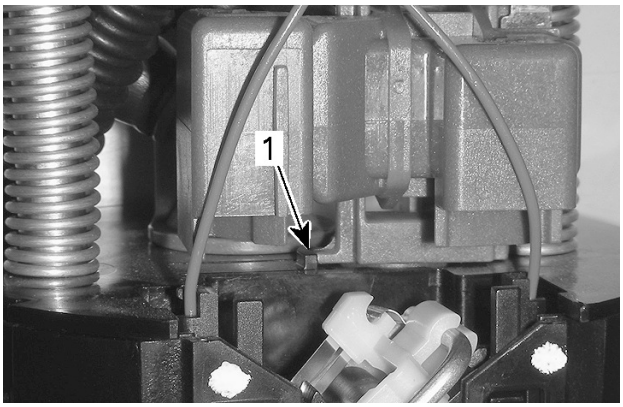

smr2008-022-030_a

TAB UP WHEN PRESSURE REGULATOR PROPERLY LOCKED

1. *Pressure regulator locking tab*

3. Reconnect the ground wire onto the pressure regulator.

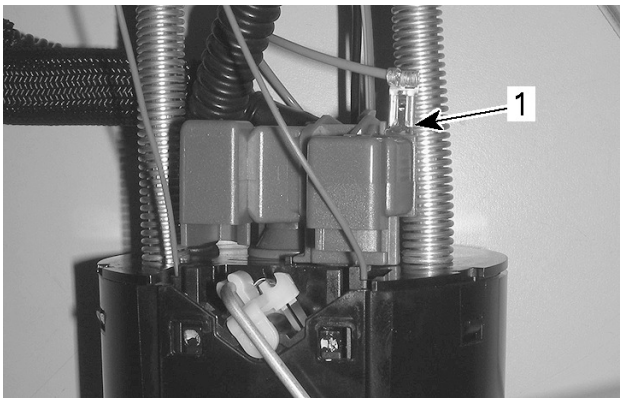

smr2008-022-031_a

1. *Pressure regulator ground wire installed*

4. Ensure fuel level sensor connector is locked into the module flange connector.

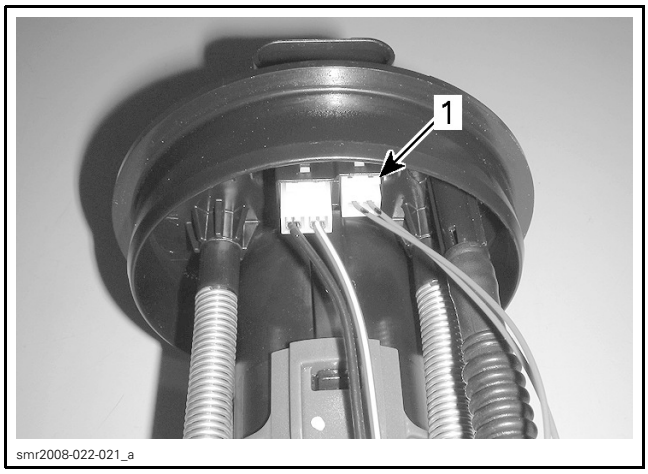

1. Fuel level sensor connector

5. Test fuel level sensor resistance as described in this subsection.
6. Reinstall the fuel pump module. Refer to *INSTALLING THE FUEL PUMP* in this subsection.

FUEL TANK

Inspecting the Fuel Tank

1. Open front storage compartment cover.
2. Remove storage bin or partitions. Refer to *BODY* subsection.

Models with Suspension

3. Remove front ventilation box.

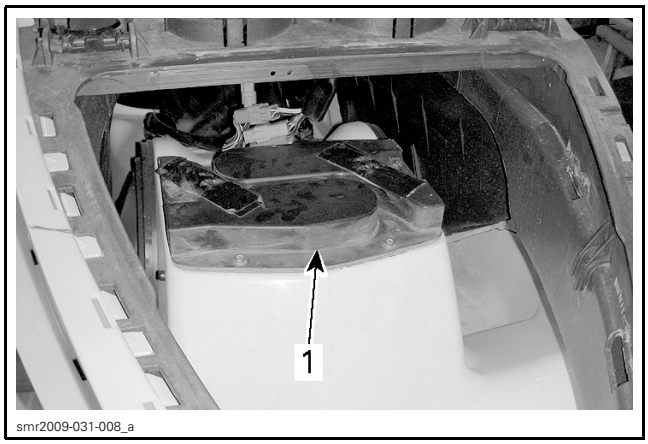

1. Ventilation box

Models Without Suspension

4. Open or remove seat for access to aft end of fuel tank.

All Models

5. Inspect fuel tank retaining straps for wear, cracks or any other damages. Inspect strap clip anchors.
6. Inspect fuel tank for wear caused by any abnormal contact or rubbing with other component(s).
7. Disconnect fuel filler hose from fuel tank.
8. Inspect fuel tank filler hose for wear, cracks or other damages.
9. Visually inspect the inside and outside of the fuel tank filler necks for crack(s). If crack(s) are found, replace fuel tank.
10. With your fingers, feel the inside and outside surfaces of fuel tank, especially near the filler neck.
11. Flex fuel tank neck to ensure there are no hidden cracks.

NOTE: A fuel tank is comprised of 2 components: the tank and the filler neck. The filler neck is injection molded and the tank is then blow molded over the neck. During the molding process, a small molding seam may appear on the inner side of the neck at approximately 4 mm (5/32 in) from the base of the neck. It is normal to have a molding seam and it should not be confused with a crack.

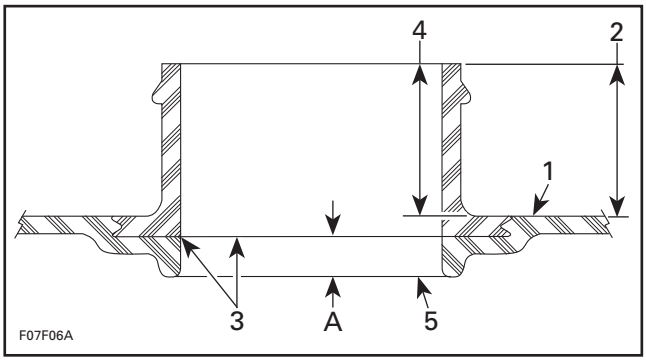

1. Tank upper surface area
2. Inspect outer upper surface at filler neck
3. Normal molding seam
4. Inspect upper surface area inside filler neck
5. Base of filler neck

A. Approx. 4 mm (5/32 in)

12. Install filler hose and torque retaining clamps.

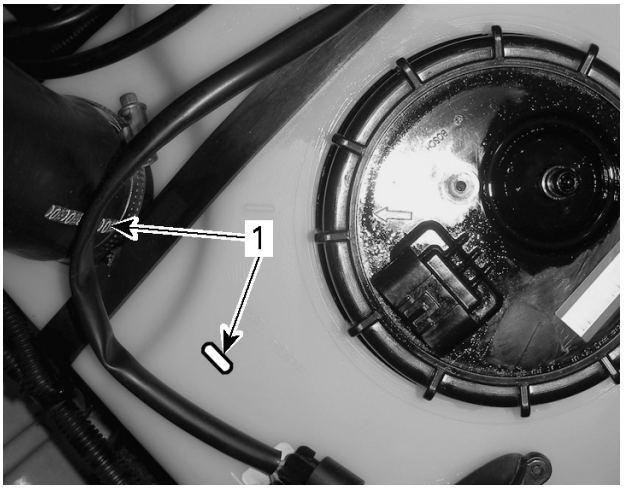

smr2012-027-012_b

INDEXING WITH FUEL TANK
1. Align mark with the writing on hose

TORQUE	
Filler hose retaining clamps	3.5 N•m (31 lbf•**in**)

13. Reinstall all other removed parts. Refer to appropriate subsection.

Removing the Fuel Tank

1. Remove engine. Refer to *ENGINE REMOVAL AND INSTALLATION*.

Models with Suspension

2. Remove suspension base. Refer to *SUSPENSION*.

All Models

1. Siphon fuel tank.
2. Disconnect fuel pump connections.

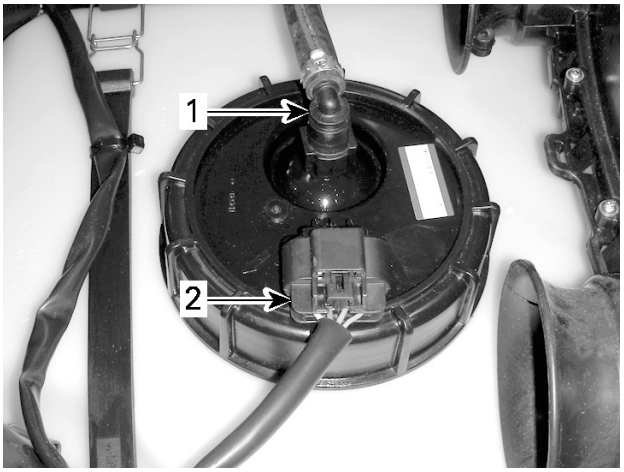

smr2012-027-010_b

1. Quick connect fitting (high pressure fuel hose)
2. Harness connector

3. Disconnect filler hose from fuel tank.

NOTE: Removing retaining screws of the filler neck may help to disconnect hose from fuel tank.

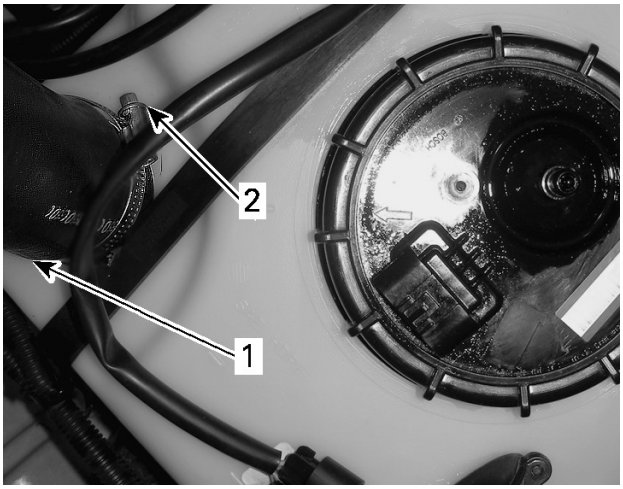

smr2012-027-012_c

1. Filler hose
2. Retaining clamp

NOTE: Take note of wiring harness, hose and cable routing for proper reinstallation. Also note method used for securing with locking ties.

4. Detach fuel tank retaining straps.
5. Remove fuel tank from the vehicle.
6. Remove fuel pump as necessary. Refer to *FUEL PUMP* in this subsection.
7. Inspect hull and flotation foams for wear.

Installing the Fuel Tank

NOTE: Apply torque values as specified in the exploded view.

1. Reinstall fuel pump if it was removed. Refer to *FUEL PUMP* in this subsection.
2. Ensure flotation foams are properly positioned under fuel tank.
3. Insert fuel tank in hull.
4. Place fuel tank retaining strap ends in anchoring clips.

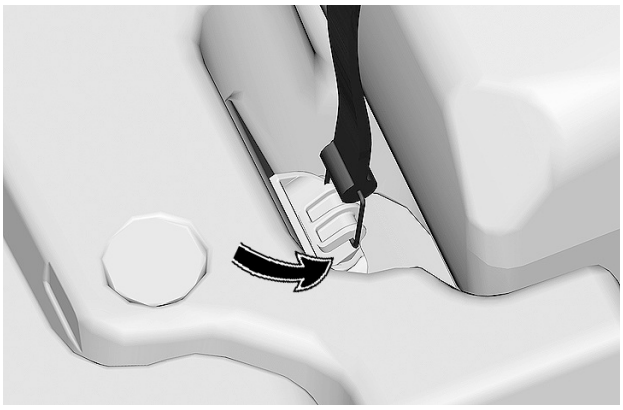

smr2016-028-003_a

5. Secure retaining strap ends on top of fuel tank.
6. Properly secure wire harness, cables and hose as prior to removal using appropriate locking ties.
7. Install fuel tank filler hose as illustrated.

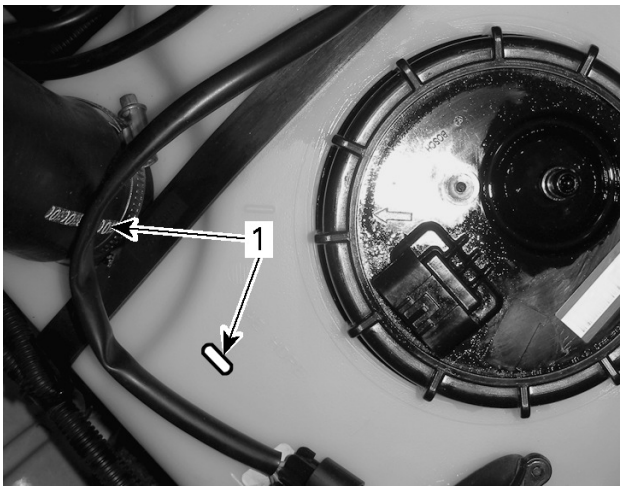

smr2012-027-012_b

INDEXING WITH FUEL TANK
1. Align mark with the writing on hose

TORQUE	
Filler hose retaining clamps	3.5 N•m (31 lbf•**in**)

8. Reinstall all other removed parts. Refer to their subsections.
9. When vehicle reassembly is complete, test fuel tank for leaks as described in this subsection.

POWER DISTRIBUTION AND GROUNDS

GENERAL

POWER DISTRIBUTION DIAGRAM

Refer to the *WIRING DIAGRAM*.

Power distribution is shown in red on the color wiring diagram. Refer to *KNOWLEDGE CENTER*.

NOTE: Refer to *WIRING DIAGRAM INFORMATION* subsection for how to properly interpret the *WIRING DIAGRAM*.

FUSE BOX

Location

Models with Suspension

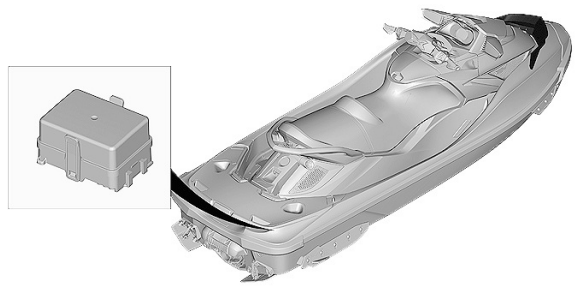

smr2016-029-001

Models without Suspension

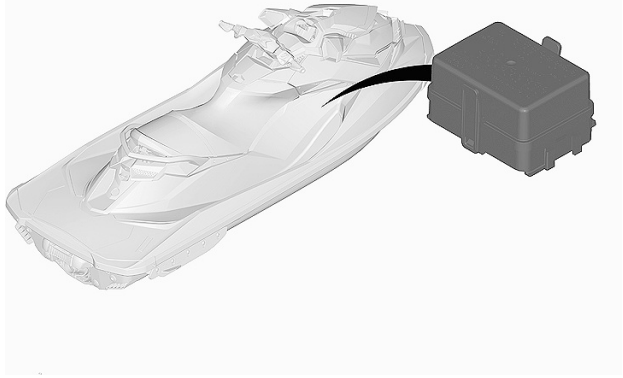

smr2016-029-002

Fuse Identification

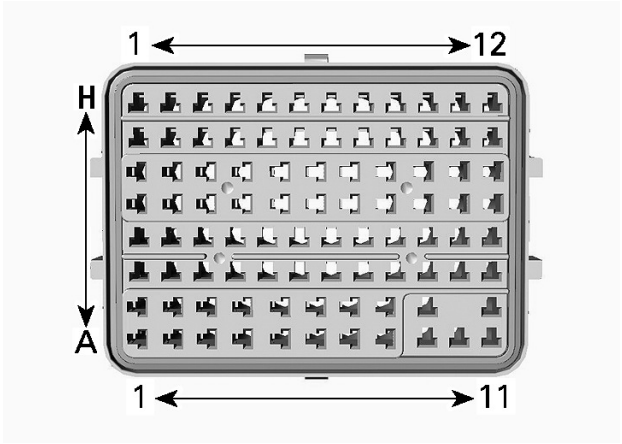

smr2011-027-002_a

FUSE BOX PIN IDENTIFICATION

NUMBER OF CAVITIES BY ROW	
ROW	NUMBER OF CAVITIES
A-B	11
C-D	12
E-F	11
G-H	12

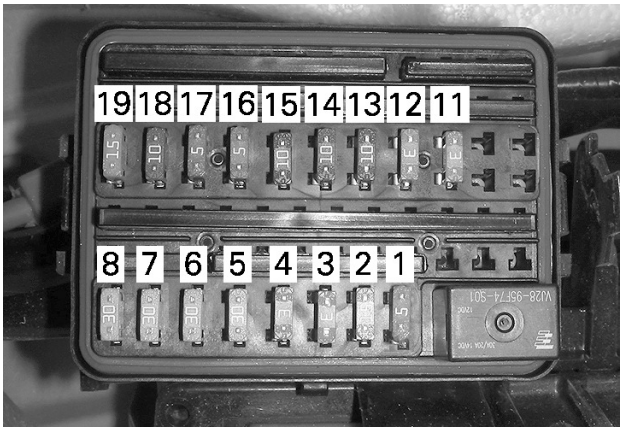

smr2011-027-003_a

FUSE IDENTIFICATION

NO.	DESCRIPTION	
F1	Through relay: – iS control	5 A
F2	Direct power (through F8): – Diagnostic connector	15 A
F3	Direct power (through F8): – START/STOP	3 A
F4	Direct power (through F8): – GPS [2]	3 A
F5	Direct power: – iBR power [1]	30 A
F6	Direct power: – Voltage regulator/rectifier	30 A
F7	Direct power: – iS power	30 A
F8	– F2 – F3 – F4 – Relay	30 A
F11	Through relay: – Depth sounder	3 A
F12	Through relay: – O.T.A.S. – Gauge start up – CAPS	3 A
F13	Through relay: – Fuel injector cyl. 1 – Ignition coil cyl. 1	10 A
F14	Through relay: – Fuel injector cyl. 2 – Ignition coil cyl. 2	10 A
F15	Through relay: – Fuel injector cyl. 3 – Ignition coil cyl. 3	10 A
F16	Through relay: – Starter solenoid	5 A
F17	Through relay: – iBR control	5 A
F18	Through relay: – Fuel pump	10 A
F19	Through relay: – ECM power	15 A

Note 2: If so equipped.

RELAY

Relay Pin Identification

The relay is in the fuse box. Refer to *FUSE BOX LOCATION*.

RELAY PIN IDENTIFICATION		
FUNCTION	FUSE BOX PIN	CONDITION
12-volt input at winding	B9	Direct battery power from fuse F8
Control	A11	Grounded by ECM B pin H2 **once START/STOP is depressed**
12-volt input at contacts	A9	Direct battery power from fuse F8
12-volt output	B11	-

GROUNDS

Ground Location

All the ground terminals are located on the front of engine.

There is no splice in the ground wiring, the interconnections are made through a bus bar in the fuse box.

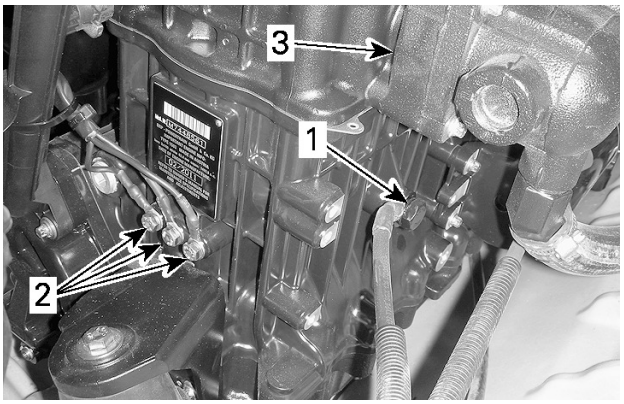

smr2011-027-004_a

FRONT OF ENGINE
1. *Battery ground*
2. *Electrical components grounds*
3. *Exhaust manifold*

IGNITION SYSTEM (1503 4-TEC)

SERVICE TOOLS

Description	Part Number	Page
D.E.S.S. POST REMOVER	529 035 943	8
DIAGNOSTIC HARNESS	529 036 188	8
ECM ADAPTER TOOL	529 036 166	5, 8
FLUKE 115 MULTIMETER	529 035 868	3, 8

SERVICE PRODUCTS

Description	Part Number	Page
DOW CORNING 111	413 707 000	6
LOCTITE 767 (ANTISEIZE LUBRICANT)	293 800 070	7

GENERAL

⚠ WARNING

Torque wrench tightening specifications must be strictly adhered to.
Locking devices when removed (e.g.: locking tabs, elastic stop nuts, self-locking fasteners, cotter pins, etc.) must be replaced.

Hoses, cables or locking ties removed during a procedure must be reinstalled as per factory standards.

⚠ WARNING

Never check for engine ignition spark from an open coil and/or spark plug as spark may cause potential fuel vapors to ignite. Always use an approved spark tester.

SYSTEM DESCRIPTION

The engine control module (ECM) controls the ignition system, as well as many other engine related functions.

The battery supplies power to the primary side of the ignition coils through a relay while the ECM completes the circuit to each coil primary winding by switching it to ground at the appropriate moment.

The ignition system is a digital inductive type system.

Ignition system parameters such as ignition timing, dwell time, and firing order are controlled by ECM in order to meet engine operational requirements.

Three separate ignition coils receive power from three separate fuses.

When a ground signal is provided by the ECM to an ignition coil primary winding, a high voltage is induced in the coil secondary winding that is used to produce a spark at the spark plug electrode.

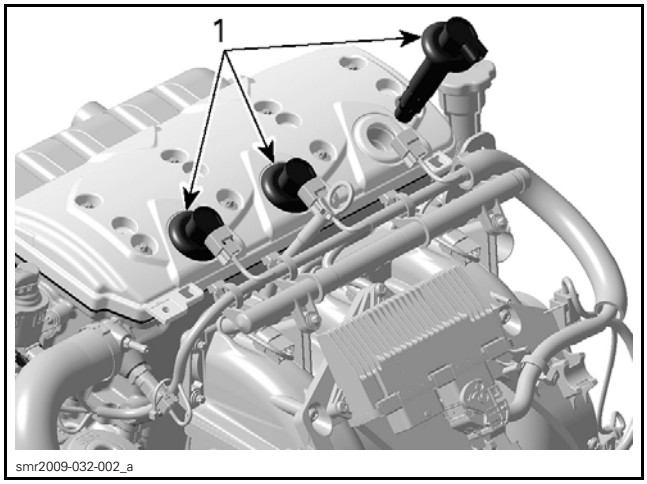

1. Ignition coils

Ignition Timing

Ignition timing is not adjustable.

The ECM is programmed with ignition maps that it uses along with data received from a variety of sensors to establish optimum ignition timing under all engine operating conditions.

The firing of each spark plug is independent of the others.

Engine RPM Limiter

The ECM will limit the maximum engine speed by cutting off ignition spark and fuel at a predetermined engine RPM.

ENGINE	RPM LIMITER
155	7750 RPM
215 and 260	8300 RPM

Knock Sensor

A knock sensor is mounted on the cylinder block behind the intake manifold. It detects specific vibrations that would typically be generated by engine detonation.

If detonation occurs, the knock sensor detects it and the ECM goes into a specific operating mode whereby it temporarily retards the ignition advance until detonation stops.

The ECM is able to identify in which cylinder the knocking occurs and modifies the ignition advance on that cylinder only.

Refer to the *ELECTRONIC FUEL INJECTION (EFI)* section for testing and replacement procedures.

TROUBLESHOOTING

It is good practice to check for fault codes using the B.U.D.S. as a first troubleshooting step. Refer to *DIAGNOSTIC AND FAULT CODES* subsection.

Refer to *POWER DISTRIBUTION* for fuses and relay information.

Always refer to the *WIRING DIAGRAM* when troubleshooting an electrical circuit.

TESTING THE IGNITION SYSTEM

1. Ensure fuses F13, F14 and F15 are powered and in good condition.
2. If a fuse is burnt, test for a short circuit or faulty component on that fuse circuit before replacing the fuse.

⚠ WARNING

Due to the possibility of flammable vapors accumulating in the bilge, you should always test for a short circuit which may produce a spark and ignite the vapors before replacing a burnt fuse.

3. If there is no active fault code, start diagnostic by carrying out *TESTING THE IGNITION COIL USING B.U.D.S.*
4. If a primary winding of an ignition coil or a circuit is at fault, a fault code will be set. Refer to *DIAGNOSTIC AND FAULT CODES* subsection.

DIAGNOSTIC GUIDELINES

The following is provided to help in diagnosing the probable cause of a problem. It is a guideline and should not be assumed to list all possible causes.

ENGINE WILL NOT STOP WHEN REMOVING KEY FROM ENGINE CUT-OFF SWITCH

1. **Defective engine cut-off switch**
   - *Check engine cut-off switch. Replace if necessary.*

ENGINE WILL NOT START (ENGINE TURNS OVER)

1. **Fouled or defective spark plug**
   - *Check spark plug condition. Replace if necessary.*
2. **Defective CPS**
   - *Test CPS, refer to ELECTRONIC FUEL INJECTION (EFI) subsection.*
3. **Defective trigger wheel**
   - *Check. Refer to PTO HOUSING, MAGNETO AND STARTER subsection.*
4. **Defective ignition circuit**
   - *Check fuses, ignition coils, wiring and connectors.*

ENGINE HARD TO START

1. **Faulty, fouled or worn out spark plug**
   - *Check spark plug condition. Replace if necessary.*
2. **Drowned engine**
   - *Check engine temperature value using B.U.D.S. monitoring page. If the temperature read is lower than the ambient temperature, CTS sensor may be defective or have a bad connection. Therefore, the ECM would erroneously set the engine in cold start mode and it could flood the spark plugs.*

ENGINE MISFIRES, RUNS IRREGULARLY

1. **Fouled, defective, worn spark plugs**
   - *Check spark plug condition. Replace if necessary.*
2. **Defective T.O.P.S. sensor**
   - *Test T.O.P.S. Refer to LUBRICATION subsection.*
3. **Damaged trigger wheel/loose CPS**
   - *Check. Refer to PTO HOUSING, MAGNETO AND STARTER subsection.*

4. Defective ignition circuit
   - *Check fuses, ignition coils, wiring and connectors.*
5. Poor engine grounds
   - *Check ground condition, refer to POWER DISTRIBUTION AND GROUNDS subsection.*

ENGINE CONTINUALLY BACKFIRES

1. Fouled, defective spark plugs
   - *Check spark plug condition. Replace if necessary.*
2. Damaged trigger wheel/defective or loose CPS
   - *Check, refer to PTO HOUSING, MAGNETO AND STARTER and ELECTRONIC FUEL INJECTION (EFI) subsections.*

ENGINE DETONATION OR PINGING

1. Faulty or disconnected knock sensor
   - *Check, refer to ELECTRONIC FUEL INJECTION (EFI) subsection.*

ENGINE LACKS ACCELERATION OR POWER

1. Weak spark
   - *Check spark plugs, coils, wiring and connections.*

PROCEDURES

IGNITION COILS

⚠ WARNING

Never check for engine ignition spark from an open coil and/or spark plug in the engine compartment as a spark may cause fuel vapors which may have accumulated in the bilge to ignite.

Ignition Coil Location

1. Open or remove seat.

Models with a Suspension

2. Remove the rear ventilation cover.

All Models

Ignition coils are located on top of the valve cover.

NOTE: Some models have an engine cover that has to be removed to access the ignition coils.

Testing the Ignition Coil Using B.U.D.S.

1. Connect to the latest applicable B.U.D.S. software. Refer to *COMMUNICATION TOOLS AND B.U.D.S.* section.
2. Select the **Activation** and **ECM** tabs.
3. Energize the ignition coil to be tested by clicking on the corresponding illustration.

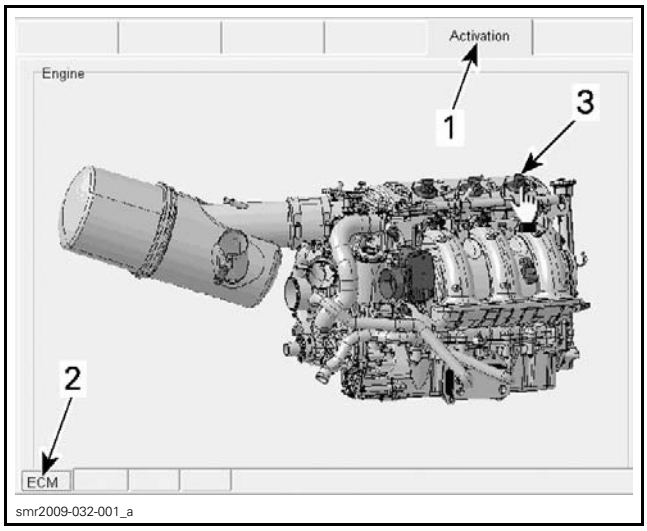

IGNITION COIL ACTIVATION
1. Activation tab
2. ECM tab
3. Click on the desired ignition coil

You should hear the spark occurring. If in doubt, use a sealed **vapor proof** spark tester or an inductive spark tester as available from tool suppliers, to prevent a spark from occurring in the bilge.

If there is no ignition at one or more coils, carry out a *TESTING THE IGNITION COIL INPUT VOLTAGE*.

If spark is weak, try a new spark plug. If spark is still weak, try a new ignition coil.

NOTE: The voltage required to produce a spark in the combustion chamber is higher when the engine is running.

Testing the Ignition Coil Input Voltage

Make sure fuses F13, F14 and F15 are good before testing.

1. Disconnect the applicable ignition coil connector.
2. Remove tether cord from the engine cut-off switch.
3. Set the FLUKE 115 MULTIMETER (P/N 529 035 868) to Vdc.

4. Press the START button to activate the ECM.
5. Measure voltage within 3 minutes after depressing START/STOP button.

TEST PROBES		VOLTAGE
VIOLET/BLUE wire (ignition coil no. 1)	Battery ground	Battery voltage
VIOLET/GREEN wire (ignition coil no. 2)		
VIOLET/ORANGE wire (ignition coil no. 3)		

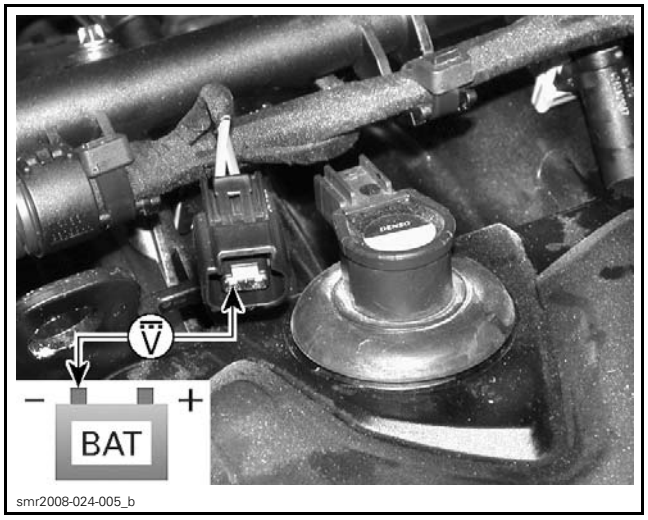

IGNITION COIL INPUT VOLTAGE TEST

If test succeeds, carry out an *TESTING THE IGNITION COIL RESISTANCE*.

If test fails, carry out an *TESTING THE IGNITION COIL POWER CIRCUIT CONTINUITY*.

Testing the Ignition Coil Power Circuit Continuity

1. Remove fuses F13, F14 and F15.

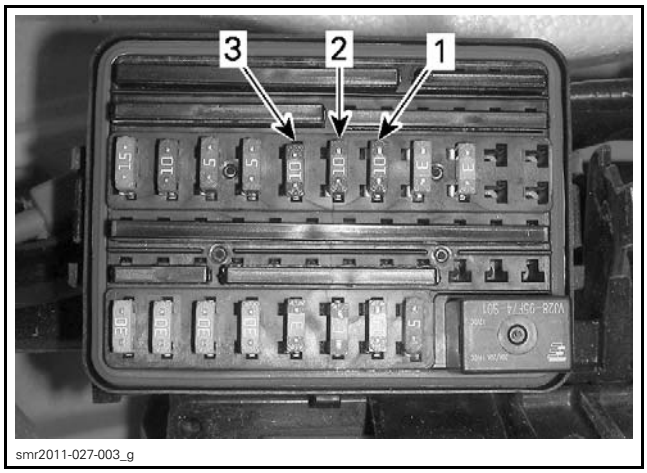

1. Fuse F13
2. Fuse F14
3. Fuse F15

2. Read resistance of the desired ignition coil circuit.
3. Set multimeter to Ω.

IGNITION COIL	IGNITION COIL WIRE	FUSE BOX	MEASUREMENT
1 (rear)	VT/BU	Terminal F7	Close to 0 Ω
2	VT/GN	Terminal F6	
3	VT/OG	Terminal F5	

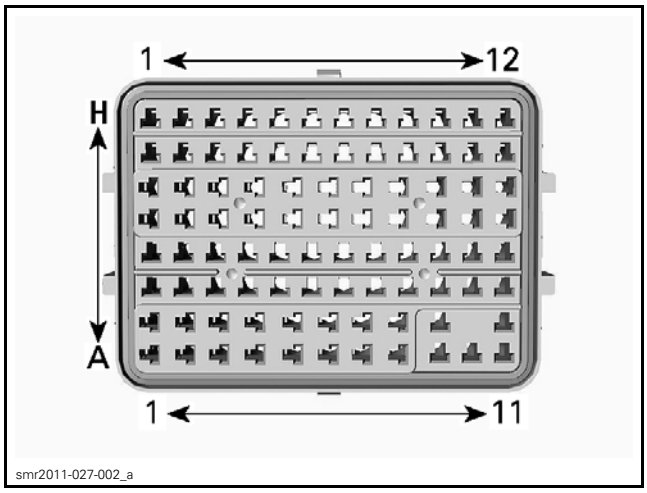

FUSE BOX PIN IDENTIFICATION

If test fails at any ignition coil, test the following items separately and repair/replace wiring or terminals from fuse box to the applicable ignition coil.

– Wiring from fuse box to engine C04-4POS connector
– Wiring from C04-4POS connector to ignition coil.

Refer to *WIRING DIAGRAM* for details.

Testing the Ignition Coil Control Circuit Continuity

REQUIRED TOOL	
ECM ADAPTER TOOL (P/N 529 036 166)	

1. Disconnect ECM connector "A". For connector identification, refer to *WIRING HARNESS AND CONNECTOR* subsection.
2. Connect ECM connector to the adapter.
3. Disconnect ignition coil connector.
4. Test for continuity of circuit as per following table.

COIL	IGNITION COIL WIRE	ECM ADAPTER	RESISTANCE
Cylinder 1 (rear)	BN/BK	A-M4	Close to 0 Ω (continuity)
Cylinder 2	BN/OG	A-M2	
Cylinder 3	BN/YE	A-M1	

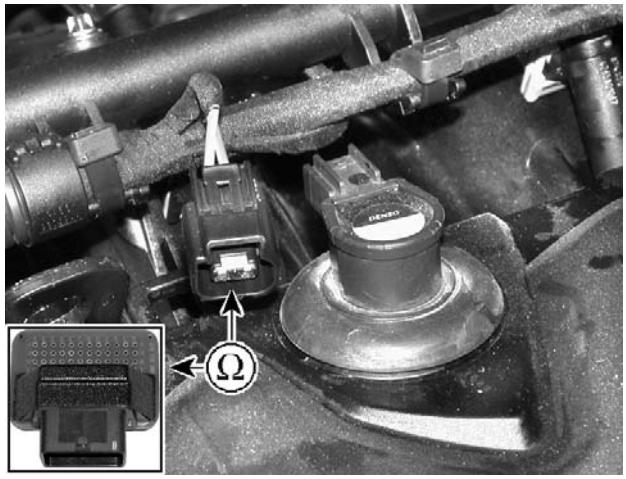

smr2007-023-003_d

IGNITION COIL CONTROL CIRCUIT TEST

If test fails, repair the connector or replace the engine wiring harness.

Testing the Ignition Coil Resistance

An ignition coil with a good resistance measurement can still be faulty. Current leakage can occur at high voltage levels which is not detectable with an ohmmeter. Replacing the ignition coil may be necessary as a test.

1. Remove ignition coil. Refer to *REMOVING THE IGNITION COIL* in this subsection.
2. Perform a visual inspection of the ignition coils. Check for corrosion, bent pins, loose or burnt contacts, and cracked or torn insulator.
3. Using a multimeter, test the resistance in both primary and secondary windings.

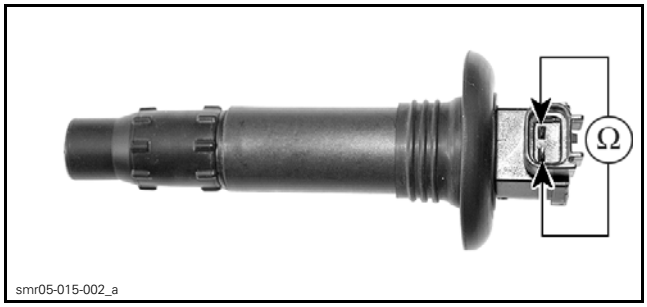

smr05-015-002_a

PRIMARY WINDING

CIRCUIT	TERMINAL	RESISTANCE @ 20°C (68°F)
Primary winding	1 and 2	0.85 - 1.15 Ω

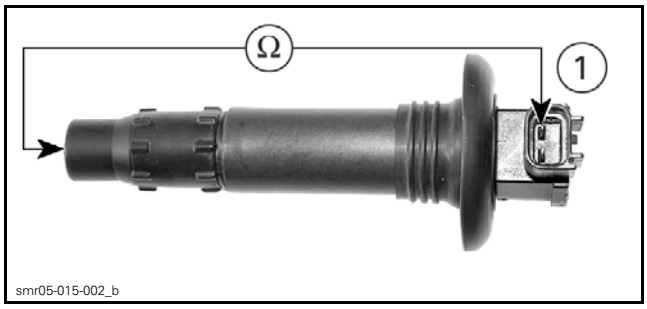

smr05-015-002_b

SECONDARY WINDING

CIRCUIT	TERMINAL	RESISTANCE @ 20°C (68°F)
Secondary winding	1 and spark plug terminal	9.5 - 13.5 kΩ

If any test fails, replace ignition coil.

If test succeeds, carry out an *TESTING THE IGNITION COIL CONTROL CIRCUIT CONTINUITY*.

Removing the Ignition Coil

1. Disconnect ignition coil connector.

NOTICE **Do not remove the ignition coil before disconnecting the input connector or the wires may be damaged. Do not pry up ignition coil with a screwdriver to avoid damage.**

NOTE: Twist ignition coil in both directions as you pull it up to ease removal.

2. Remove ignition coil from spark plug.

Lubricating the Ignition Coil

1. Push rubber seal down.

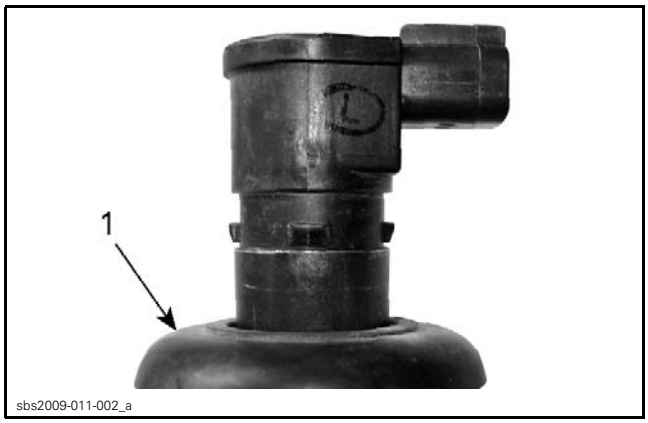

1. Rubber seal pulled down

2. Apply DOW CORNING 111 (P/N 413 707 000) to rubber seal seat as shown.

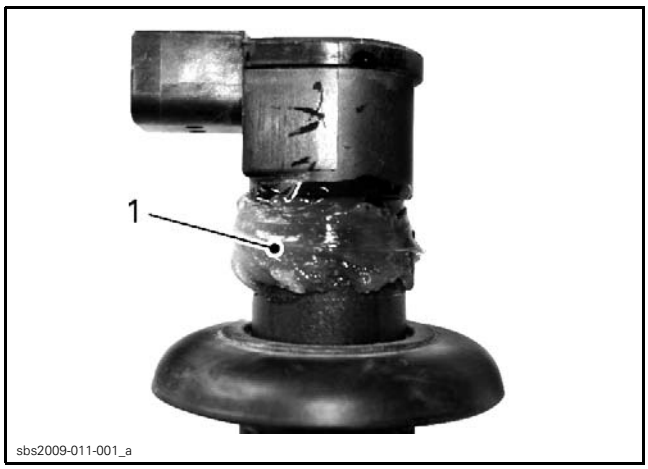

1. Apply product here

3. Pull rubber seal back on its seat making sure the tabs on the ignition coil and the slots in the seal properly match together.
4. Leave a ring of grease on top of the seal as shown to act as a water barrier. Wipe off the excess.

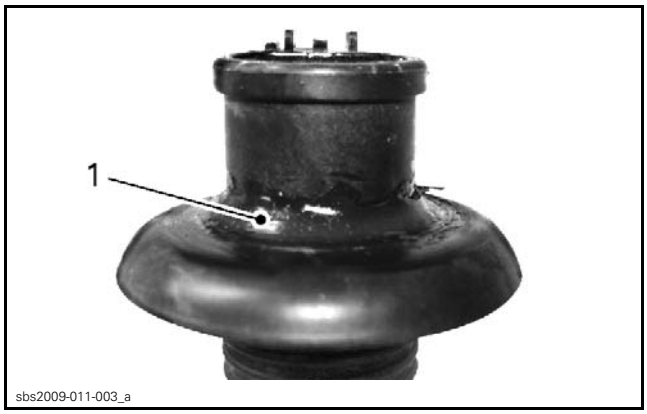

1. Correctly shaped excess of product

5. Apply DOW CORNING 111 (P/N 413 707 000) on rubber seal contact area.

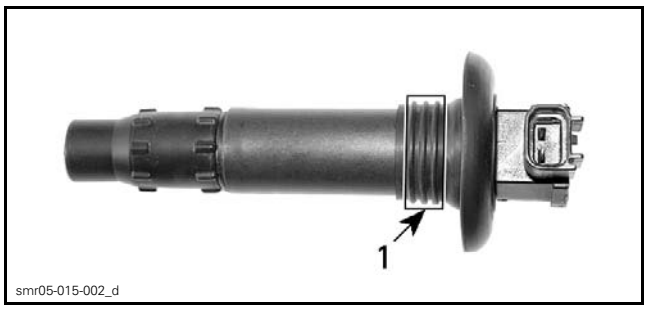

1. Apply product here

Installing the Ignition Coil

NOTE: Prior to inserting the ignition coil on its spark plug, apply sealant as described in *LUBRICATING THE IGNITION COIL*.

1. Install coil in cylinder head hole.
2. Push the ignition coil down to securely install it on the spark plug tip.
3. Ensure the seal seats properly with top surface of engine valve cover.

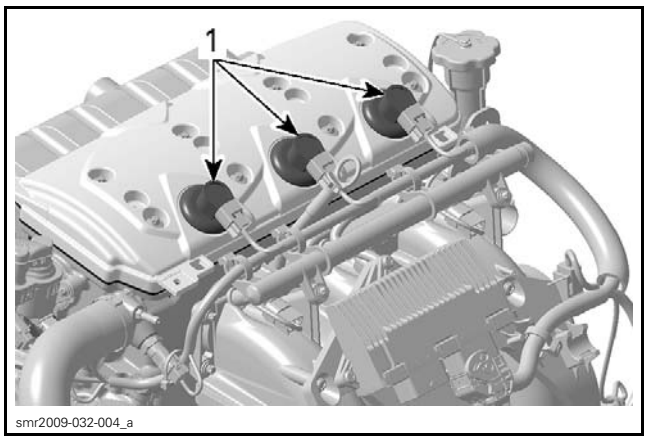

1. Seal properly seated

SPARK PLUGS

Removing the Spark Plug

1. Remove ignition coil. Refer to *REMOVING THE IGNITION COIL* in this subsection.

⚠ WARNING

Never remove an ignition coil from a spark plug without disconnecting it from the wiring harness. Flammable vapors may be present in the bilge. Should the tether cord be installed on the engine cut-off switch, a spark could be generated at the spark plug end of the coil possibly resulting in an explosion.

2. Using a spark plug socket, release the torque applied to the spark plug.

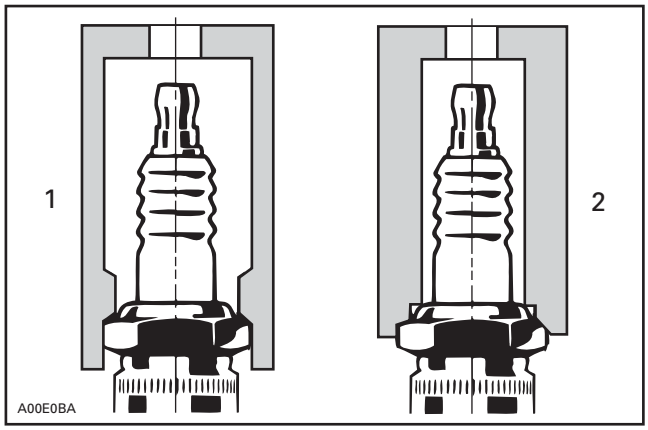

1. Approved socket
2. Improper socket

3. Clean the spark plug and cylinder head with pressurized air.
4. Unscrew spark plug then use the ignition coil to take spark plug out of spark plug hole.

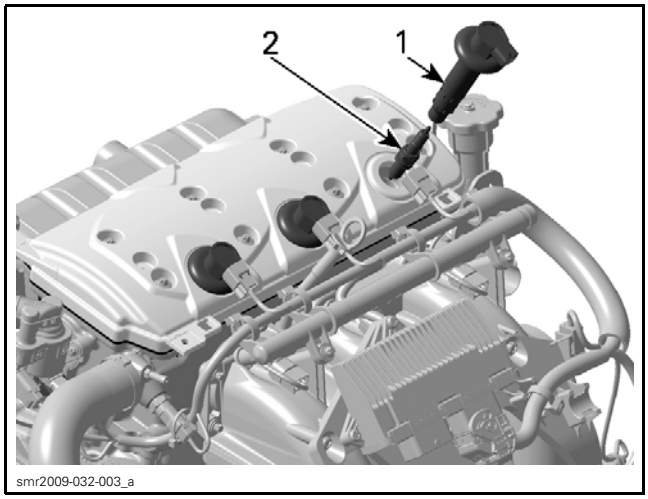

1. Ignition coil
2. Spark plug

Troubleshooting a Fouled Spark Plug

Fouling of the spark plug is indicated by irregular running or misfiring of the engine, decreased engine speed due to misfiring, reduced performance, and increased fuel consumption.

Other possible causes are: use of an incorrect or bad fuel, defective ignition system, incorrect spark plug gap, loss of compression, or lubricating oil entering the combustion chamber.

The plug face of a fouled spark plug has either a wet or dry black carbon deposit. Such coatings form a conductive connection between the center electrode and the ground electrode.

Spark Plug Analysis

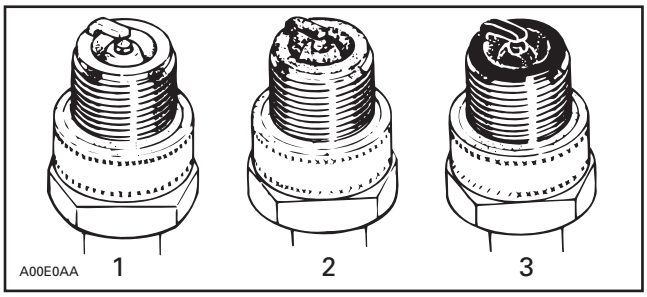

TYPICAL
1. Overheated (light gray, white)
2. Normal (light brown, brown)
3. Fouled (black, wet or dry, dark deposits, gray, melted coating)

The plug face reveals the condition of the engine, operating condition, method of driving and fuel mixture. For this reason it is advisable to inspect the spark plug at prescribed intervals, examining the plug face (i.e. the part of the plug projecting into the combustion chamber).

Installing the Spark Plug

Prior to installation, ensure the contact surfaces of the cylinder head and spark plug are free of grime.

1. Using a wire feeler gauge, set electrode gap as specified in the *TECHNICAL SPECIFICATIONS*.
2. Apply LOCTITE 767 (ANTISEIZE LUBRICANT) (P/N 293 800 070) over the spark plug threads to prevent possible seizure.
3. Hand screw spark plug into cylinder head.
4. Then, tighten the spark plug clockwise to specification using an approved spark plug socket.

TIGHTENING TORQUE	
Spark plug	18 N•m ± 2 N•m (159 lbf•**in** ± 18 lbf•**in**)

5. Install ignition coil. Refer to *INSTALLING THE IGNITION COIL* in this subsection.
6. Complete the installation in the reverse order of the removal.

ENGINE CUT-OFF SWITCH

Testing the Engine Cut-Off Switch Operation

Refer to *RADIO FREQUENCY DIGITALLY ENCODED SECURITY SYSTEM (RF D.E.S.S.)* subsection for testing procedure.

Testing the Continuity of Vehicle Harness to Engine Cut-Off Switch

1. Disconnect the 24-pin steering connector. Refer to *START/STOP SWITCH* in the *STARTING SYSTEM* subsection for details.

REQUIRED TOOLS
DIAGNOSTIC HARNESS (P/N 529 036 188)
FLUKE 115 MULTIMETER (P/N 529 035 868)
ECM ADAPTER TOOL (P/N 529 036 166)

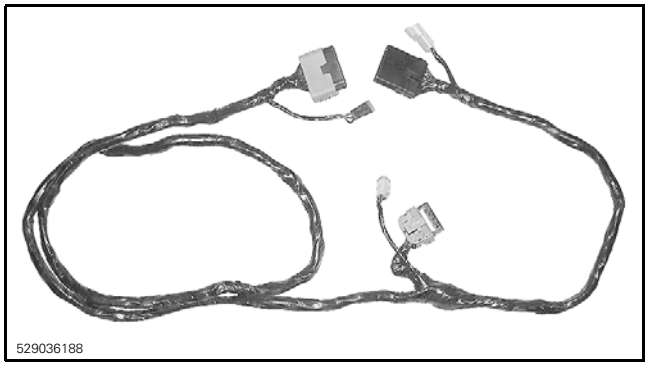
529036188

529035868

529036166

2. Connect the DIAGNOSTIC HARNESS (P/N 529 036 188) to the 24-pin vehicle harness connector only, **NOT** to the steering harness connector.
3. Disconnect connector "B" from ECM. Refer to *WIRING HARNESS AND CONNECTOR* subsection.
4. Install the ECM ADAPTER TOOL (P/N 529 036 166) on ECM connector "B".
5. Probe test connector as follows.

24-PIN TEST CONNECTOR	ECM ADAPTER TOOL	READING
11	B-E4	Close to 0 Ω
14	B-B2	
13	B-F2	

If any continuity test failed, check wiring harness between 24-pin steering connector and ECM connector.

If problem persists and all tests have been performed, try a new ECM. Refer to *ELECTRONIC FUEL INJECTION (EFI)* subsection.

6. Reconnect 24-pin steering harness connector.
7. Reinstall removed components.

Replacing the Engine Cut-Off Switch

REQUIRED TOOL
D.E.S.S. POST REMOVER (P/N 529 035 943)

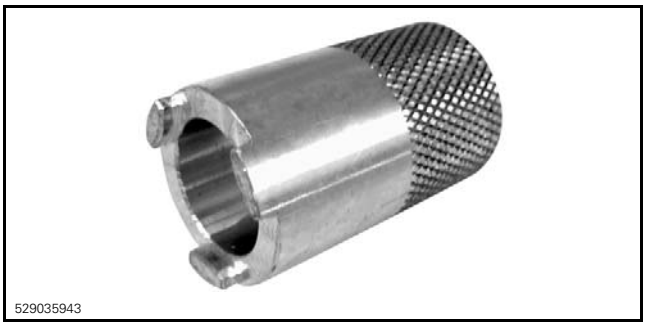
529035943

CHARGING SYSTEM

SERVICE TOOLS – OTHER SUPPLIER

Description	Part Number	Page
ELECTRO SPECIALTIES BATTERY LOAD TESTER	710	7
EXTECH INDUCTIVE AMMETER	380941	2

GENERAL

NOTICE **When performing a test on iS models with the engine running above approximately 4500 RPM for 3 seconds, be aware that the suspension will move to its predefined up position and then stop in that position. Wait until suspension is stopped before working on the watercraft. Keep away from moving parts.**

SYSTEM DESCRIPTION

The purpose of the charging system is to maintain the battery at a full state of charge and to provide the electrical system with the required electrical power for normal vehicle operation.

Magneto

The magneto is the primary source of electrical energy. It transforms a magnetic field into an electric current (AC).

The magneto has a 3 phase, delta wound, 18 pole stator that is rated at 420 watts.

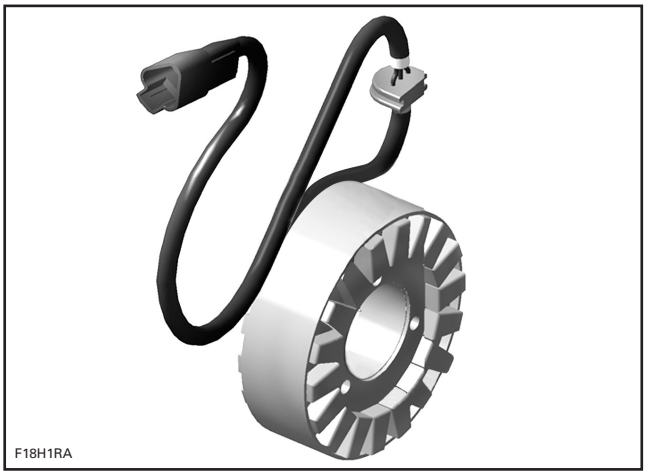

TYPICAL

Voltage Regulator/Rectifier

The rectifier receives AC current from the magneto and transforms it into direct current (DC).

The voltage regulator, included in the same unit, limits voltage to a maximum level to prevent any damage to electrical components.

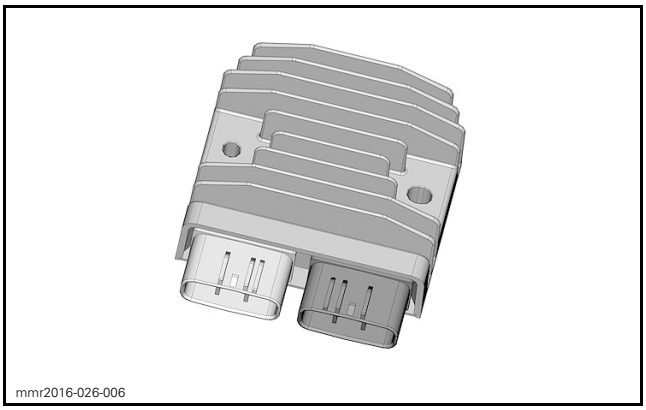

Battery

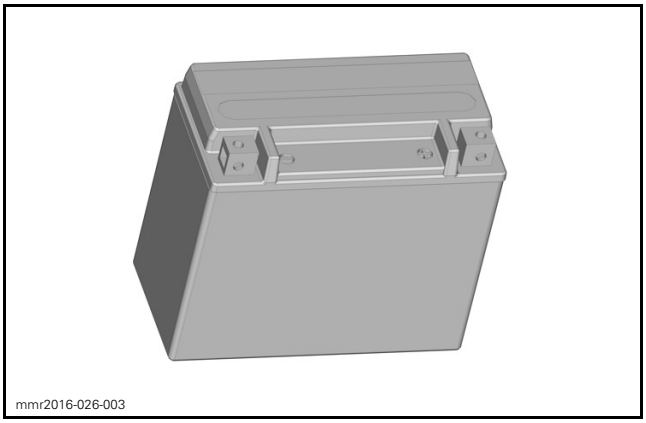

The battery supplies DC power to the electric starter for cranking the engine. During engine starting, it also supplies DC power to every electrical and electronic system in the vehicle as well as all accessories.

At low engine RPM operation and high current load conditions, it supplements the magneto output and helps to maintain a steady system voltage.

INSPECTION

CHARGING SYSTEM OUTPUT

First ensure that battery is in good condition prior to performing the following tests.

NOTE: It is good practice to check for fault codes using the B.U.D.S. as a first troubleshooting step. Refer to *DIAGNOSTIC AND FAULT CODES* subsection.

Testing Output Voltage Using B.U.D.S.

1. Connect to the latest applicable B.U.D.S. software. Refer to *COMMUNICATION TOOLS AND B.U.D.S.* subsection.
2. Select the **Monitoring** and **ECM** tabs.
3. Start engine.

NOTE: Connect a garden hose to cool exhaust system. Refer to *EXHAUST SYSTEM* subsection.

4. Increase engine RPM as specified in the following table and read voltage in B.U.D.S.

OUTPUT VOLTAGE TEST USING B.U.D.S.	
TEST ENGINE SPEED	VOLTAGE (DC)
5500 RPM	14.5 ± .5 Vdc

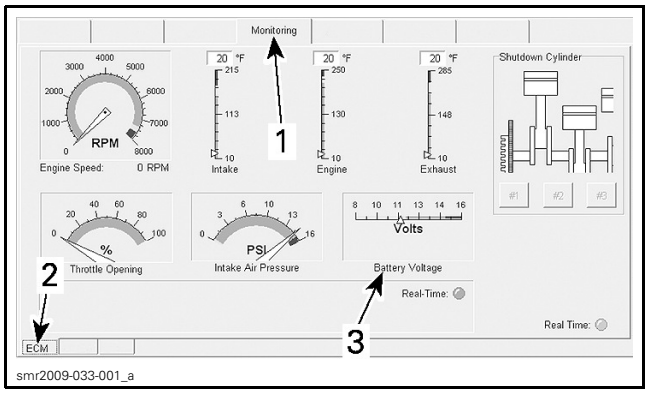

TYPICAL
1. Monitoring tab
2. ECM tab
3. Battery voltage

If voltage is above specification, replace voltage regulator/rectifier.

If voltage is below specification, check stator output and wiring harness prior to concluding that voltage regulator/rectifier is defective. Refer to *PTO HOUSING, MAGNETO AND STARTER* subsection.

Testing Output Voltage Using a Multimeter

For battery access, refer to *BATTERY ACCESS* in this subsection.

1. Set multimeter to Vdc.
2. Connect multimeter to battery posts.
3. Start engine.

NOTE: Connect a garden hose to cool exhaust system. Refer to *EXHAUST SYSTEM* subsection.

4. Increase engine RPM as specified in the following table and read voltage with the multimeter.

OUTPUT VOLTAGE TEST USING A MULTIMETER	
TEST ENGINE SPEED	VOLTAGE (DC)
5500 RPM	14.5 ± .5 Vdc

If voltage is above specification, replace voltage regulator/rectifier.

If voltage is below specification, check stator output and wiring harness prior to concluding that voltage regulator/rectifier is defective. Refer to *PTO HOUSING, MAGNETO AND STARTER* subsection.

Testing Output Current with an Inductive Ammeter

Use an inductive ammeter such as the EXTECH INDUCTIVE AMMETER (P/N 380941) or equivalent.

1. Turn on the ammeter and select 40 Adc.

NOTE: Zero set the ammeter before use or reading may be erroneous.

VOLTAGE REGULATOR
RE1-1

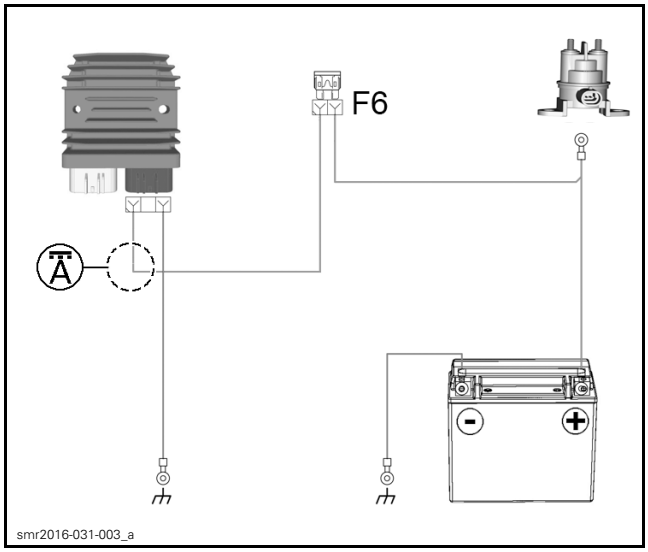

2. Start engine.

NOTE: Connect a garden hose to cool exhaust system. Refer to *EXHAUST SYSTEM* subsection.

3. Increase engine RPM as specified in the following table and read current with the ammeter.

TEST ENGINE SPEED	CURRENT
5500 RPM	Approx. 10 A (while suspension does not move)

NOTE: Initial current reading will be higher than specified due to the battery drain from the engine start. This is an indication that the charging system is operating normally. Current load will come down as the battery recovers its charge.

If current reading is far below specification, test stator output and wiring harness prior to concluding the voltage regulator/rectifier is faulty.

NOTE: If the battery is in poor condition or is not at a full state of charge, current reading will be above specification. Refer to *BATTERY* in this subsection for battery testing.

TROUBLESHOOTING

DISCHARGED OR WEAK BATTERY

1. **Battery posts and/or cable terminal oxidized.**
   - *Clean battery terminals, posts, and coat with dielectric grease.*
2. **Loose or bad connections.**
   - *Check for wiring and connector tightness, frayed or broken wires. Repair or replace cables or connectors.*
3. **Worn or faulty battery (sulfated, fretting, shorted plates or cell, damaged casing, loose post).**
   - *Test BATTERY VOLTAGE (LOAD APPLIED).*
   - *Replace battery.*
4. **Burnt fuse(s) or faulty rectifier.**
   - *First check fuse(s). If in good condition, check voltage regulator/rectifier.*
5. **Faulty stator.**
   - *Test stator and replace as required.*
6. **Parasitic or "Key Off" current loads.**
   - *Isolate, reduce or eliminate such loads.*
   - *Recharge battery as recommended if vehicle is not used for extended periods of time.*

   NOTE: "Key Off" or parasitic loads may be loads due to installed accessories. Parasitic loads may also be due to water infiltration in connectors, or partial short circuits that slowly drain a battery without causing a fuse to burn.

LOW OR NO CHARGING SYSTEM VOLTAGE

1. **Blown F6 fuse.**
   - *Check F6 fuse.*
2. **Defective stator.**
   - *Test stator. Refer to PTO HOUSING, MAGNETO, AND STARTER subsection.*
3. **Defective charging system wiring or connections.**
   - *Check for damaged wiring.*
   - *Check for damaged or loose connections.*

REPETITIVE BLOWN F6 FUSE

1. **Voltage regulator/rectifier internal circuit shorted to ground.**
   - *Refer to TESTING VOLTAGE REGULATOR/RECTIFIER FOR BLOWN F6 FUSE in this subsection.*

PROCEDURES

VOLTAGE REGULATOR/RECTIFIER

Testing the Voltage Regulator Continuity

Due to internal circuitry, there is no static test available to check continuity.

Voltage Regulator/Rectifier Location

Models with suspension

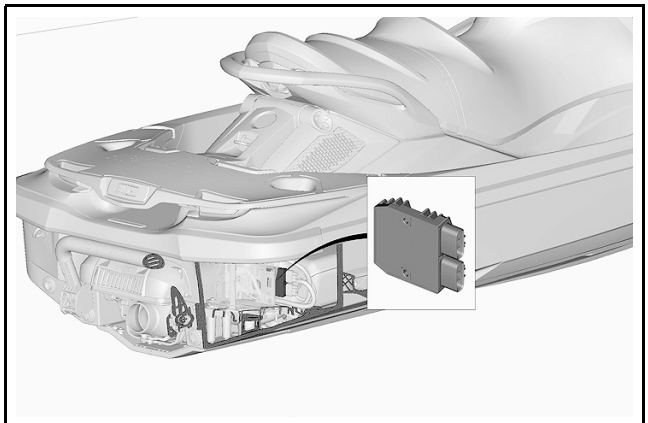

smr2016-031-006

Models without suspension

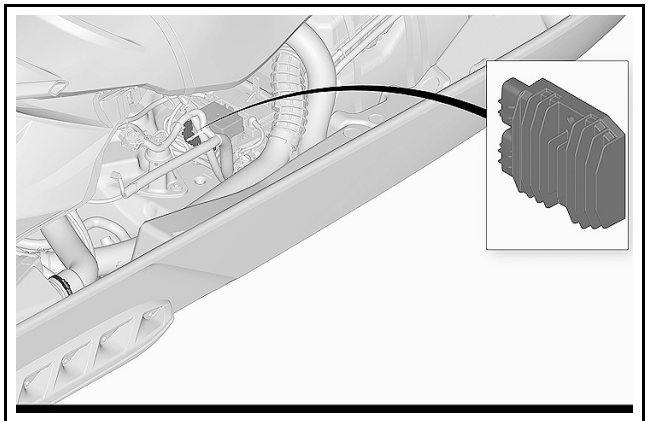

smr2016-031-007

Testing Voltage Regulator/Rectifier for Blown F6 Fuse

1. Detach the voltage regulator/rectifier from the electrical component support. Refer to *REMOVING THE VOLTAGE REGULATOR/RECTIFIER* in this subsection.
2. Disconnect the voltage regulator/rectifier 2-wire connector.
3. Install a new fuse.

If the fuse still burns, check for a shorted wire or connector pin.

If fuse does not burn, replace regulator/rectifier.

Removing the Voltage Regulator/Rectifier

1. Disconnect both connectors from the voltage regulator/rectifier.

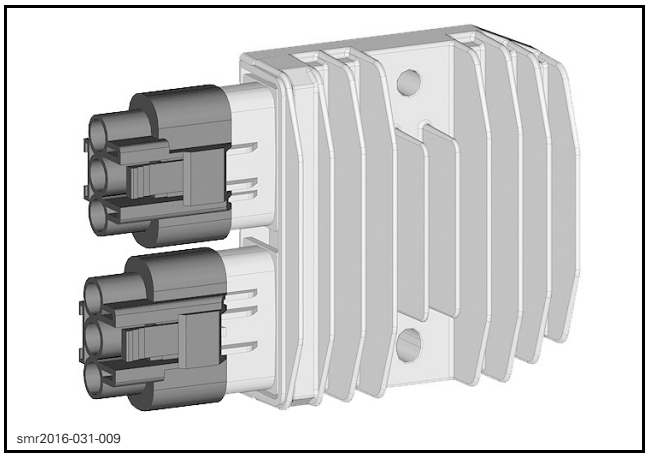

smr2016-031-009

2. Remove screw.

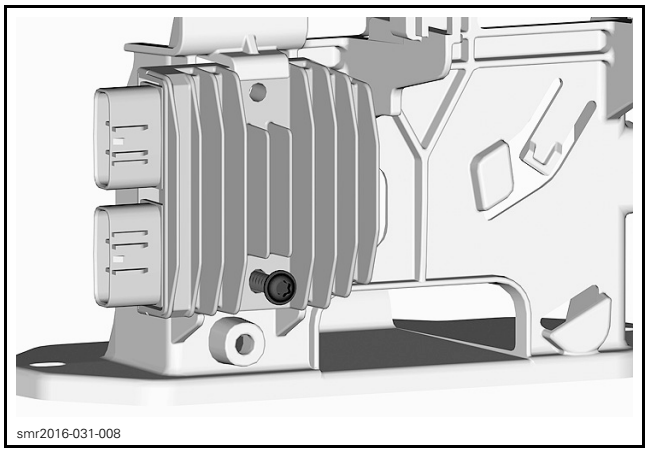

smr2016-031-008

3. Rotate and remove regulator/rectifier.

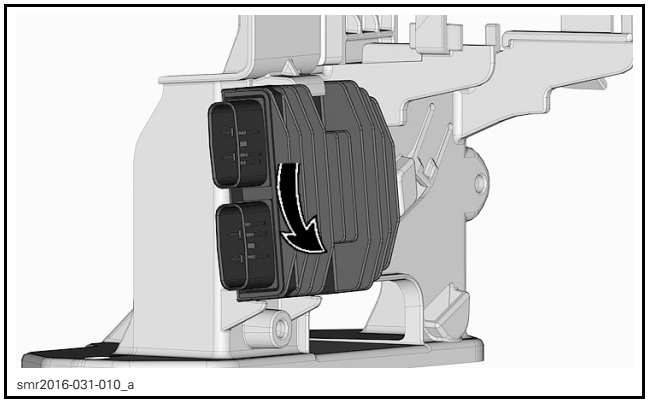

smr2016-031-010_a

Installing the Voltage Regulator/Rectifier

Installation is the reverse of the removal procedure

TIGHTENING TORQUE	
Regulator/Rectifier Screw	5 N•m ± 1 N•m (44 lbf•**in** ± 9 lbf•**in**)

ELECTRICAL COMPONENT SUPPORT

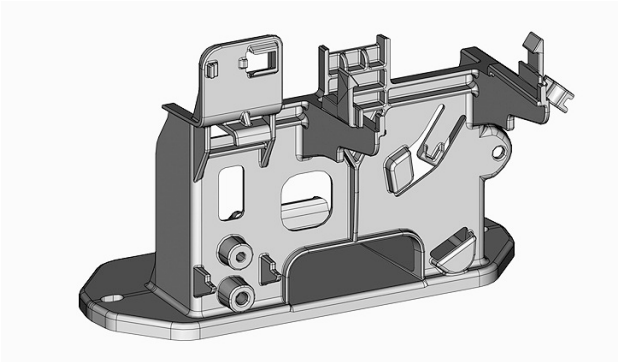

smr2016-031-017

Removing the Electrical Component Support

Remove the following components from the electrical component support.

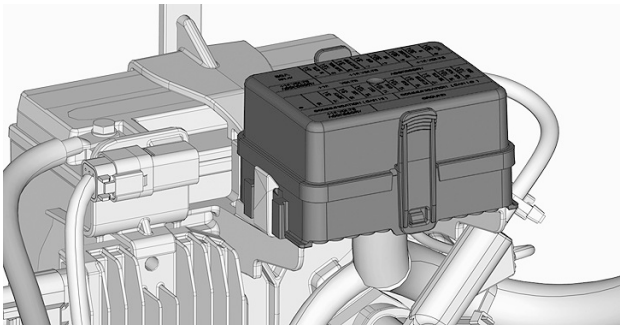

smr2016-031-011

FUSE BOX

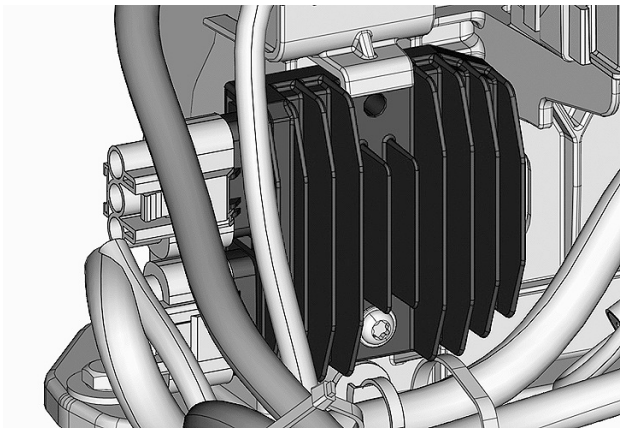

smr2016-031-012

REGULATOR/RECTIFIER

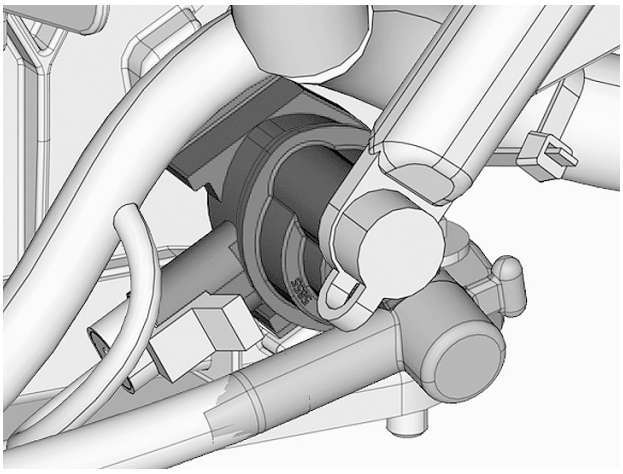

smr2016-031-013

STARTER SOLENOID

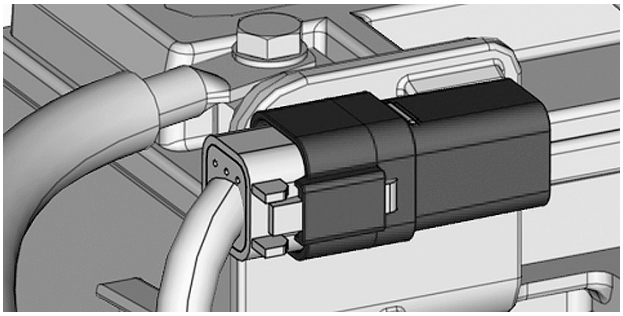

smr2016-031-014

DIAGNOSTIC CONNECTOR

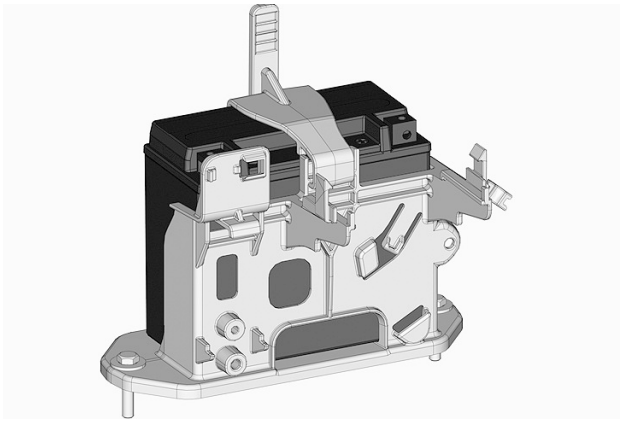

smr2016-031-015

BATTERY

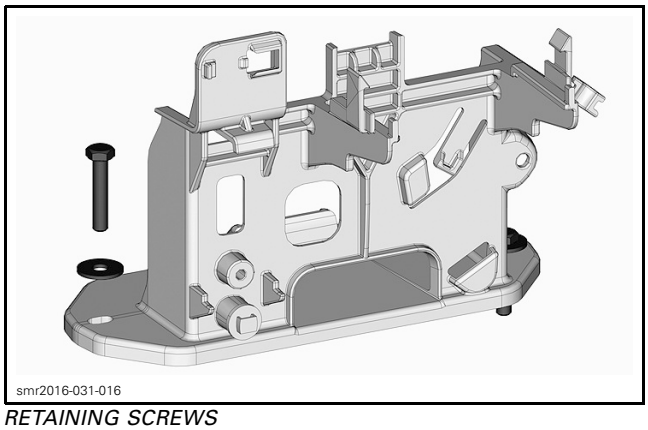
smr2016-031-016

RETAINING SCREWS

Installing the Electrical Component Support

Installation is the reverse of removal procedure.

TIGHTENING TORQUE	
Retaining Screws	16 N•m ± 2 N•m (142 lbf•**in** ± 18 lbf•**in**)

⚠ WARNING

Replace all locking ties.

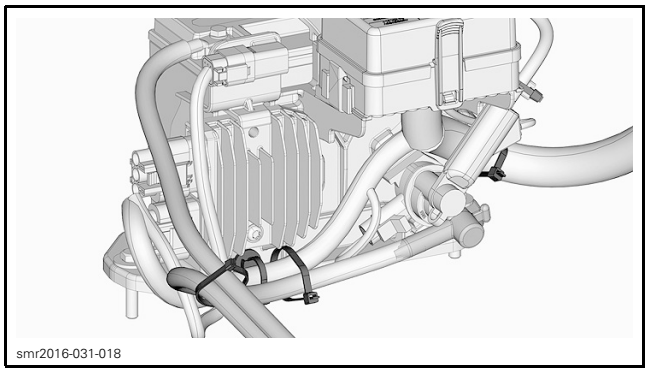
smr2016-031-018

BATTERY

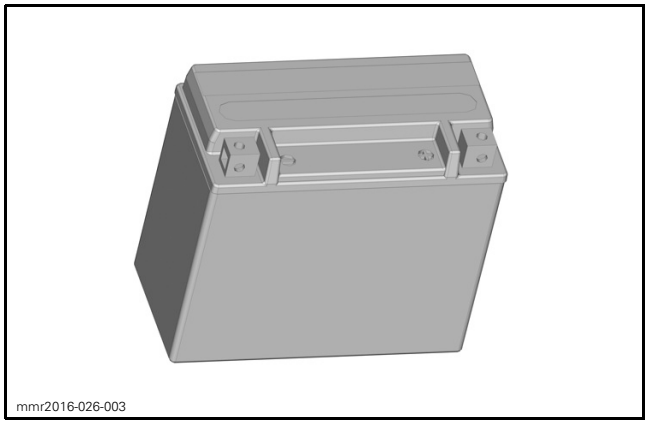
mmr2016-026-003

Battery Location

Models with suspension

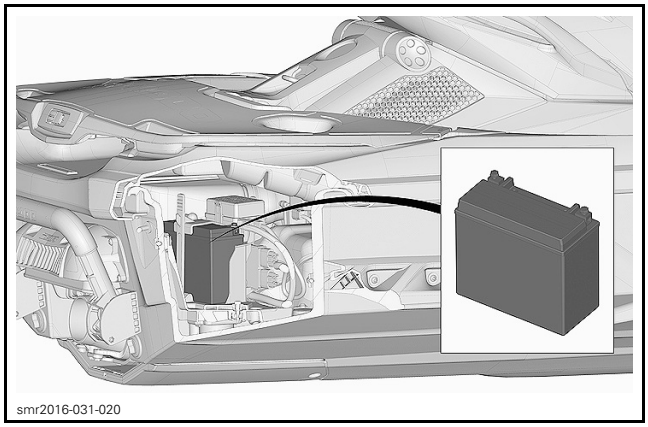
smr2016-031-020

Models without suspension

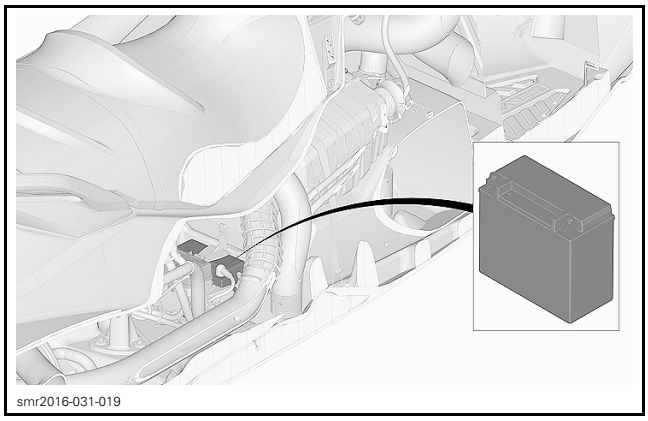
smr2016-031-019

Removing the Battery

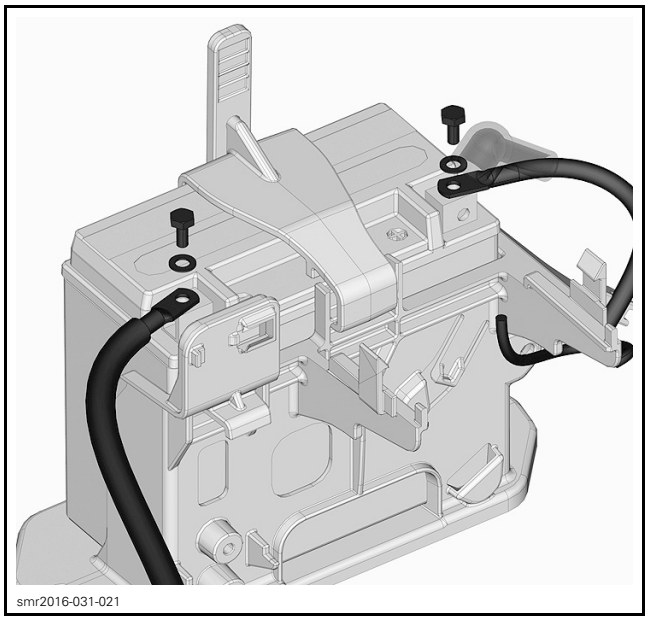
smr2016-031-021

Cleaning the Battery

Clean the battery casing, caps, cables and battery posts using a solution of baking soda and water.

NOTICE **Do not allow cleaning solution to enter battery.**

Remove corrosion from battery cable terminals and battery posts using a firm wire brush. Rinse with clear water then dry well.

Inspecting the Battery

- Keep the top free of grime
- Check casing, cables, clamps, and case for obvious damage or loose connections.
- Clean terminals and connectors as necessary

Refer to battery manufacturer guidelines.

Battery Testing

There are 3 types of battery tests.

TEST METHOD	COMMENT
Testing voltage (load applied)	A dynamic voltage test with a load applied gives an accurate indication of the condition of the battery. **This is the most recommended method.**
Testing voltage (no load)	A static voltage test is carried out without discharging current. It is the simplest and most commonly used but the most likely to give false results.

Testing Battery Voltage(Load Applied)

Use a load testing device such as the ELECTRO SPECIALTIES BATTERY LOAD TESTER (P/N 710). It has a 500 A carbon pile adjustable load.

Follow battery load tester instructions.

Apply a load of 3 times the ampere-hour rating of the battery for 14 seconds, then check battery voltage.

BATTERY VOLTAGE TEST (LOAD APPLIED)	
TIME TO MEASURE INTO TEST	VOLTAGE (WITH LOAD APPLIED)
14 seconds	10.5 Vdc min.

If battery voltage has dropped below specification, the battery storage capacity has decreased appreciably and the battery should be replaced.

Testing Battery Voltage(No Load)

NOTE: Be aware that the voltage test can indicate that the battery is in good condition even though the battery does not have enough stored energy to crank the engine. A load test gives a more accurate indication of the condition of the battery.

If the battery has just received a charge, wait 1-2 hours before taking a voltage reading.

Set multimeter to Vdc and measure voltage at battery terminals.

FULLY CHARGED BATTERY VOLTAGE (NO LOAD)
12.6 Vdc minimum

Storing the Battery

Disconnect and remove battery from watercraft as explained in *BATTERY REMOVAL*.

NOTICE **Battery storage is critical for battery life. Regularly charging the battery during storage will prevent cell sulfation. Keeping the battery in vehicle for storage may lead to contacts degradation/corrosion and case damage if freezing occurs. A discharged battery will freeze and crack in areas where freezing conditions are experienced. Electrolyte leakage will damage surrounding parts. Always remove battery from vehicle for storage and regularly recharge it to keep an optimal condition.**

The battery must always be stored fully charged. If required, recharge until the recommended specific gravity is obtained prior to storage.

NOTICE **Battery electrolyte temperature must not exceed 50°C (122°F) during charging. The battery casing should not feel hot to the touch.**

Clean battery terminals and cable connections using a wire brush.

Apply a light coat of dielectric grease on terminals.

Clean battery casing and caps using a solution of baking soda and water.

Rinse battery with clear water and dry well using a clean cloth.

Store battery in a cool dry place. Such conditions reduce self-discharging and keep fluid evaporation to a minimum. Keep battery away from dew, high moisture and direct sunlight.

AMBIENT TEMPERATURE	CHARGING FREQUENCY
Below 16°C (60°F)	Every month
Above 16°C (60°F)	Every 2 weeks

⚠ WARNING

Batteries must always be stored out of reach of children.

Activating a New Battery

YTX20-L batteries are factory activated. Test and charge battery as required before installing it.

Charging a Used Battery

To find the recommended charger current output in amps for a specific battery, divide the battery amp hour rating by 10. For example a 14 AH battery should be charged at 1.4 amps (14 AH ÷ 10 = 1.4 amp current).

⚠ WARNING

Never charge battery while installed in watercraft.

For best results, battery should be charged when it is at room temperature. A battery that is cold may not accept current for several hours after charging has begun.

Do not charge a frozen battery. If the battery charge is very low, the battery may freeze. If you suspect the battery to be frozen, move it to a heated area for about 2 hours (or more if required) to let it thaw out before charging.

⚠ WARNING

Always charge a battery in a well ventilated area.

The time required to charge a battery will vary depending on several factors, such as:

– Battery temperature: The charging time is increased for a cold battery as charging current accepted by a cold battery will be lower than for a warm battery. As the battery warms up, it will accept a higher rate of charge.
– State of charge: As a battery discharges, it gives up its stored energy. The greater the discharge, the longer it will take to fully recharge it.
– Type of charger: Battery chargers vary in the amount of voltage and current that they can supply.

Charging a Very Flat or Completely Discharged Battery

The battery charger used should have an adjustable charging rate. A unit which can be adjusted in small increments is acceptable.

The battery charger must be equipped with an ammeter capable of accurately measuring current of less than 1 ampere.

Unless this procedure is properly followed, a good battery may be needlessly replaced.

1. Measure the voltage at the battery posts with an accurate voltmeter. If it is below 10 volts, the battery will accept current at very low rate. It could be some time before the charging rate increases. Such low current flow may not be detectable on some charger ammeters and the battery will not seem to accept the charge.
2. Exceptionally for this particular case, set the charger to a high rate.

NOTE: Some chargers have a polarity protection feature which prevents charging unless the charger leads are connected to the correct battery terminals. A completely discharged battery may not have enough voltage to activate this circuitry, even though the leads are connected properly. This will make it appear that the battery will not accept a charge. Follow the charger manufacturer's instruction on how to bypass or override this circuitry so that the charger will turn on and charge a low-voltage battery.

3. Since battery chargers vary in the amount of voltage and current they provide, the time required for the battery to accept a measurable charger current may be up to 10 hours or more.
4. If the charging current is not up to a measurable amount after 10 hours, the battery should be replaced.
5. If the charging current is measurable before the end of the 10 hour period, the battery is good and charging should be completed at a lower rate.
6. It is recommended that any battery recharged using this procedure be tested under load prior to returning it to service.

Installing the Battery

Installation is the reverse of removal procedure.

⚠ WARNING

Always connect battery cables in the specified order, RED positive cable first, BLACK negative cable last.

1. Connect RED (+) cable.
2. Connect BLACK (-) cable last.
3. Apply dielectric grease on battery posts.
4. Verify cable routing and attachments.

STARTING SYSTEM (1503 4-TEC)

SERVICE TOOLS

Description	Part Number	Page
DIAGNOSTIC HARNESS	529 036 188	3
ECM ADAPTER TOOL	529 036 166	2, 4
FLUKE 115 MULTIMETER	529 035 868	2–4

GENERAL

BASIC STARTING SYSTEM OPERATION

Engine Cranking Conditions

The following conditions must be met to allow engine cranking:

1. START/STOP button pressed and released to activate the ECM.
2. The tether cord securely installed on the engine cut-off switch and the D.E.S.S. key recognized by the ECM as valid (2 short beeps)
3. START/STOP button pressed and held.

Starting System Logic

If the ECM recognizes a valid D.E.S.S. key, it allows engine cranking by providing the ground to the starter solenoid when the START/STOP button is pressed and held.

If the START/STOP button is activated while the throttle lever is depressed more than 60%, the engine will crank but will not start (engine drowned mode).

If the START/STOP button is held after engine has started, the ECM automatically stops the starter if engine speed reaches at least 1400 RPM.

If the START/STOP button is pressed when the engine is running, the engine will shut down.

TROUBLESHOOTING

DIAGNOSTIC TIPS

NOTE: It is a good practice to check for fault codes using B.U.D.S. as a first troubleshooting step. Refer to *DIAGNOSTIC AND FAULT CODES* subsection.

Starting system failures are not necessarily related to the starter but may be due to one the following:

– Starter solenoid fuse F16
– Battery, refer to *CHARGING SYSTEM*
– START/STOP switch
– Starter solenoid
– Engine cut-off switch
– ECM
– Wiring/connections.

Check these components before removing the starter.

NOTE: This subsection assumes the problem is related to an electrical component of the starting system. If the starting system tests good, ensure engine and jet pump integrity. Refer to applicable subsection.

DIAGNOSTIC GUIDELINES

NOTHING HAPPENS WHEN START/STOP BUTTON PRESSED

1. **Battery not connected**
   - *Connect battery.*
2. **Burnt fuse**
   - *F3 fuse: (START/STOP switch circuit).*
   - *F8 fuse: (main DC power fuses).*
   - *F19 fuse (ECM power fuse).*
3. **Defective relay or related circuits**
   - *Test relay and circuits.*
4. **Defective START/STOP switch**
   - *Test START/STOP switch, wiring and connections.*

ENGINE DOES NOT CRANK

1. **D.E.S.S. not functional or wrong D.E.S.S. key**
   - *If 2 short beeps are not heard when pressing the START/STOP button, refer to RADIO FREQUENCY DIGITALLY ENCODED SECURITY SYSTEM subsection.*
2. **Burnt fuse**
   - *F16 fuse: (starter solenoid power) Carry out TESTING THE SOLENOID INPUT VOLTAGE.*

3. Discharged battery
   - *Recharge and test. Refer to CHARGING SYSTEM subsection.*
4. Battery connections
   - *Check/clean/tighten.*
5. Poor/bad or corroded ground contacts (engine, battery ground cable, starter etc.)
   - *Check/clean/repair, refer to POWER DISTRIBUTION AND GROUNDS subsection.*
6. Starter solenoid
   - *Test solenoid, wiring and connections.*
7. Damaged starter or ground cables
   - *Carry out TESTING THE SOLENOID (DYNAMIC).*
8. Obstructed starter drive gear assembly
   - *Check/repair, refer to PTO HOUSING, MAGNETO AND STARTER.*
9. No ground provided by ECM to starter solenoid
   - *Refer to TESTING THE CONTINUITY OF START/STOP SWITCH CONTROL CIRCUIT in this subsection.*
10. Engine cannot be rotated (possibly seized or jet pump blocked)
    - *Refer to ENGINE subsection.*

ENGINE CRANKS SLOWLY

1. Loose, corroded or dirty battery cable connections
   - *Check/clean/tighten.*
2. Discharged/weak battery
   - *Recharge and test. Refer to CHARGING SYSTEM subsection.*
3. Low voltage from starter solenoid
   - *Carry out a TESTING THE SOLENOID (DYNAMIC).*
4. Damaged starter or ground cables
   - *Carry out TESTING THE SOLENOID (DYNAMIC).*
5. Worn starter
   - *Check.*

STARTER TURNS, BUT STARTER DRIVE DOES NOT MESH WITH RING GEAR

1. Worn starter drive gear/starter gear/ring gear
   - *Replace worn parts. Refer to STARTER GEAR in this subsection and PTO HOUSING, MAGNETO AND STARTER subsection.*
2. Defective drive
   - *Replace starter drive. Refer to PTO HOUSING, MAGNETO AND STARTER subsection.*

STARTER KEEPS RUNNING

1. Shorted solenoid winding
   - *Replace solenoid.*
2. Melted solenoid contacts
   - *Replace solenoid.*
3. Sticking or defective starter drive
   - *Lubricate or replace. Refer to PTO HOUSING, MAGNETO AND STARTER.*

PROCEDURES

⚠ WARNING

When carrying out any kind of maintenance on the starting system, always disconnect the battery ground cable. This will eliminate the possibility of shorting out a power cable, and generating a spark which could result in a fire or and explosion. Do not place any tool on the battery.

ENGINE START/STOP SWITCH

Testing the START/STOP Switch Circuit Continuity

1. Remove START/STOP switch fuse (F3).

For fuse box access, refer to *POWER DISTRIBUTION AND GROUNDS* subsection.

Disconnect connector "B" from the ECM, refer to *WIRING HARNESS AND CONNECTOR* subsection.

Install ECM ADAPTER TOOL (P/N 529 036 166) on ECM harness connector "B".

529036166

Set the FLUKE 115 MULTIMETER (P/N 529 035 868) to Ω.

Press and hold the START/STOP switch and test for continuity of the switch circuit as per following table.

CONTINUITY TEST OF START/STOP SWITCH CIRCUIT (BUTTON PRESSED AND HELD)		
FUSE BOX	ECM CONNECTOR B	RESISTANCE
Pin A6	B-D1	Close to 0 Ω (continuity)

2. If the reading is as specified, the START/STOP switch and its wiring are good.
3. If a high resistance or an open circuit is measured, carry out *TESTING THE START/STOP SWITCH CONTINUITY*.

Testing the START/STOP Switch Continuity

1. Remove START/STOP switch fuse (F3).

GTX and RXT Models Without Suspension and Wake Pro

Open front storage compartment cover.

Remove front storage bin.

Disconnect the top air ventilation hoses.

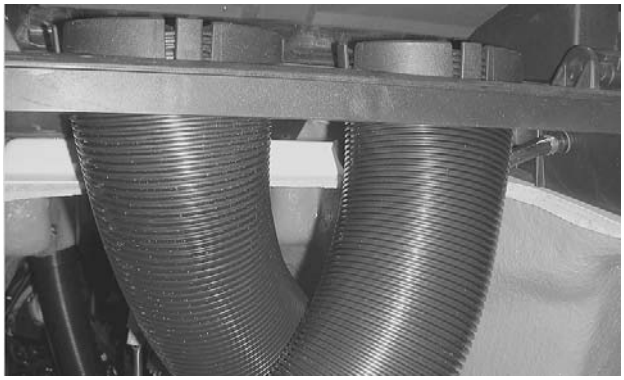

sbl2010-004-002

FRONT AIR VENTILATION HOSES

GTX and RXT Models With Suspension

Open front storage compartment cover.

Remove front storage bin.

For easier access, rise the moving deck using the gauge.

All Models

2. Disconnect the 24-pin steering connector:

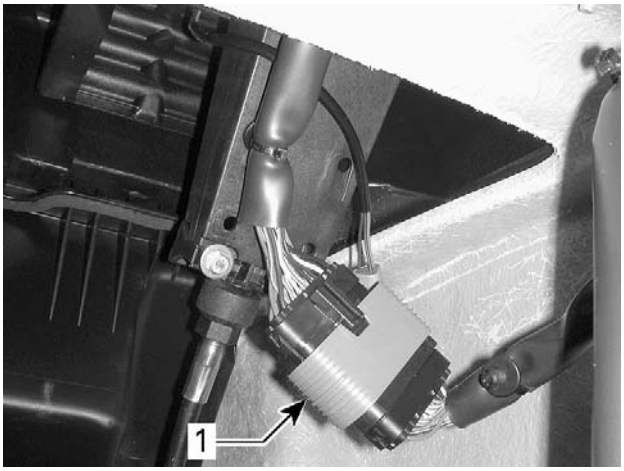

sbl2010-034-019_c

1. 24-pin steering connector

3. Connect the DIAGNOSTIC HARNESS (P/N 529 036 188) to make an in-line connection between the disconnected connector.

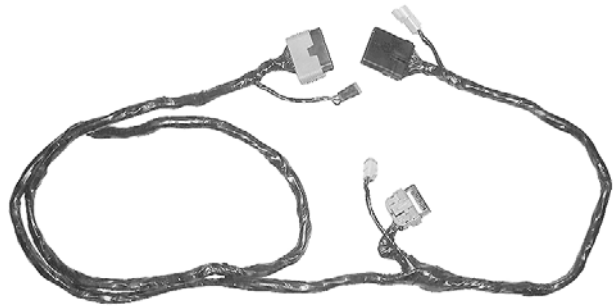

529036188

NOTE: Use the 24 pin connectors only.

4. Use the FLUKE 115 MULTIMETER (P/N 529 035 868) and select Ω.
5. Measure resistance through switch as per following table.

CONTINUITY TEST OF START/STOP SWITCH CIRCUIT		
SWITCH POSITION	DIAGNOSTIC HARNESS CONNECTOR	RESISTANCE
Released	Pins 2 and 23	Infinite (OL)
Pressed and held		Close to 0 Ω

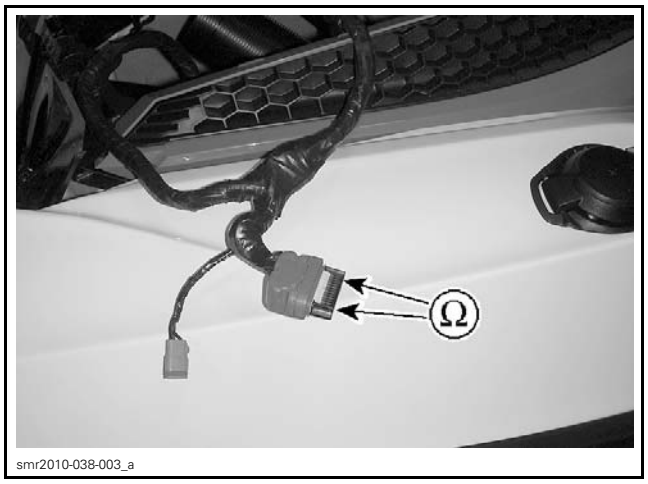

smr2010-038-003_a

If the switch does not test as specified, replace the engine START/STOP switch.

If the switch tests as specified, check for an open circuit between connections as per table:

OPEN CIRCUIT TEST		
CIRCUIT CONNECTIONS		RESISTANCE
Fuse box pin A6	Steering connector pin 23	Must be close to 0 Ω
Steering connector pin 2	ECM connector B, pin D1	

STARTER SOLENOID

Starter Solenoid Location

Models Without Suspension

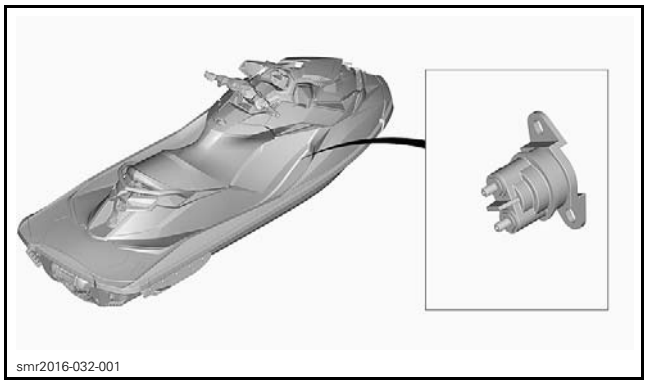
smr2016-032-001

Models With Suspension

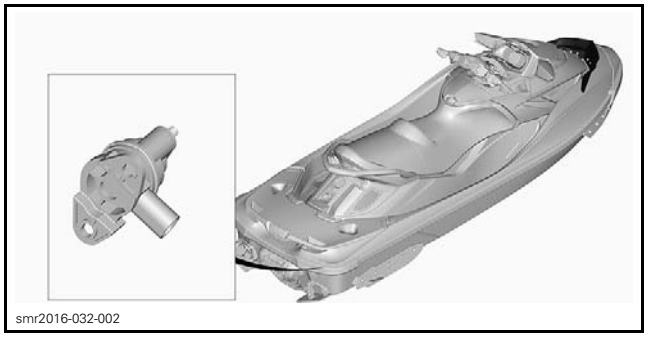
smr2016-032-002

Testing Solenoid Input Voltage

1. Make sure F16 fuse is powered and in good condition before testing.
2. Disconnect solenoid connector.
3. Set the FLUKE 115 MULTIMETER (P/N 529 035 868) to Vdc.
4. Install tether cord on the engine cut-off switch.
5. Press the START/STOP button to activate ECM.
6. Measure voltage within 3 minutes after START/STOP switch has been depressed.

SOLENOID INPUT VOLTAGE TEST (SOLENOID COIL)		
TEST PROBES		VOLTAGE READING
Pin A	Battery ground	Battery voltage

If test succeeded, carry out *TESTING SOLENOID CONTROL CIRCUIT*.

If test failed, carry out *TESTING THE START/STOP SWITCH CIRCUIT CONTINUITY*.

Testing Solenoid Control Circuit Continuity

1. Set the FLUKE 115 MULTIMETER (P/N 529 035 868) to Ω.
2. Disconnect connector "B" from ECM.
3. Install ECM ADAPTER TOOL (P/N 529 036 166) on ECM harness connector.
4. Test continuity of wiring from solenoid to ECM as per following table.

SOLENOID CONTROL CIRCUIT TEST		
SOLENOID CONNECTOR	ECM CONNECTOR B	RESISTANCE
Pin B	B-L4	Close to 0 Ω (continuity)

If test failed, repair or replace wiring/connectors.

If test succeeded, carry out *TESTING SOLENOID COIL RESISTANCE*.

Testing Solenoid Coil Resistance

1. Set multimeter to Ω.
2. Disconnect solenoid connector.
3. Measure solenoid coil resistance as per following table.

SOLENOID COIL RESISTANCE TEST		
SOLENOID CONNECTOR		RESISTANCE
Pin A	Pin B	4.5 to 5.5 Ω

If test fails, replace solenoid.

Testing Solenoid (Dynamic)

1. Ensure fuse F16, battery, and starter solenoid are properly connected.
2. Make sure the battery ground cable is securely connected to the engine. Refer to *POWER DISTRIBUTION AND GROUNDS*.
3. Set ECM in engine drowned mode:
   3.1 Depress throttle lever.
   3.2 Install a rubber band to hold lever in full throttle position.
4. Set multimeter to Vdc.
5. Crank engine.
6. **As engine is cranking**, measure the voltage as per following tables.

SOLENOID DYNAMIC TEST (ENGINE CRANKING)		
TEST PROBES		VOLTAGE (DC)
Solenoid battery post	Battery ground	Battery voltage

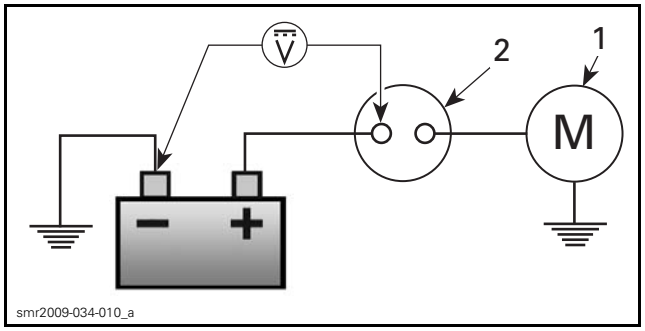

1. *Starter motor*
2. *Starter solenoid*

7. If test failed, check battery positive cable (from battery to solenoid).
8. If test succeeded, continue with next step.

SOLENOID DYNAMIC TEST (ENGINE CRANKING)		
TEST PROBES		VOLTAGE (DC)
Solenoid starter post	Battery ground	Battery voltage

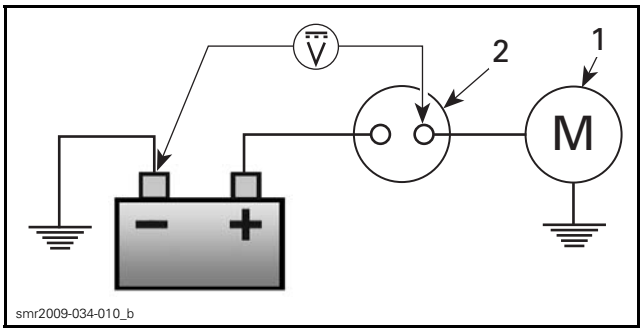

1. *Starter motor*
2. *Starter solenoid*

9. If test failed, carry out a *TESTING SOLENOID INPUT VOLTAGE*.
10. If test succeeded, continue with next step.

SOLENOID DYNAMIC TEST (ENGINE CRANKING)		
TEST PROBES		VOLTAGE (DC)
Solenoid battery post	Solenoid starter post	0.2 Vdc max.

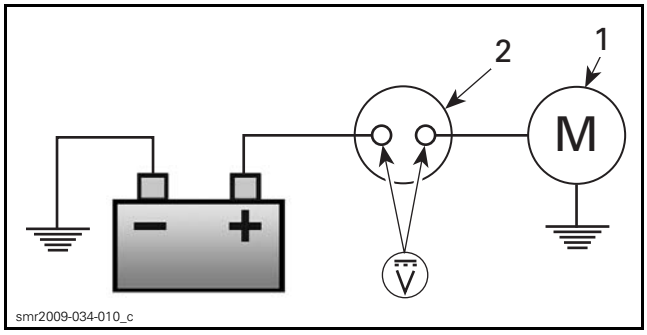

1. *Starter motor*
2. *Starter solenoid*

If test failed, replace solenoid.

If all solenoid dynamic tests are as specified, replace starter.

11. Remove rubber band from throttle lever.
12. Attach the electrical component support to the battery holder. Refer to *ELECTRICAL COMPONENT SUPPORT* in *CHARGING SYSTEM* subsection.
13. Reinstall removed parts.

Removing the Solenoid

1. Disconnect battery. Refer to *CHARGING SYSTEM* subsection.

⚠ WARNING

Always disconnect the BLACK (-) battery cable first and reconnect last.

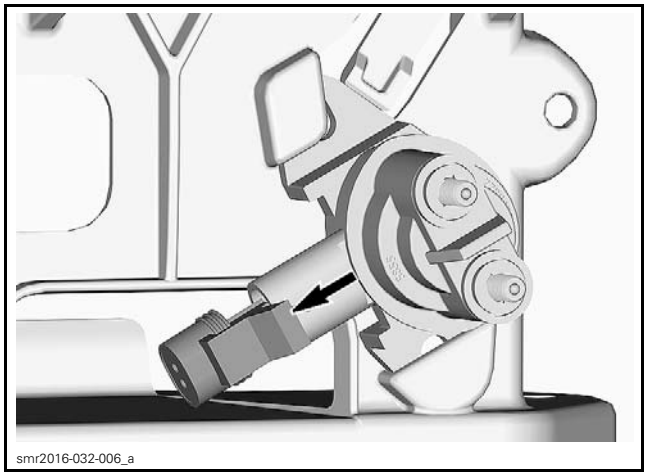

smr2016-032-006_a

2. Disconnect solenoid cables.

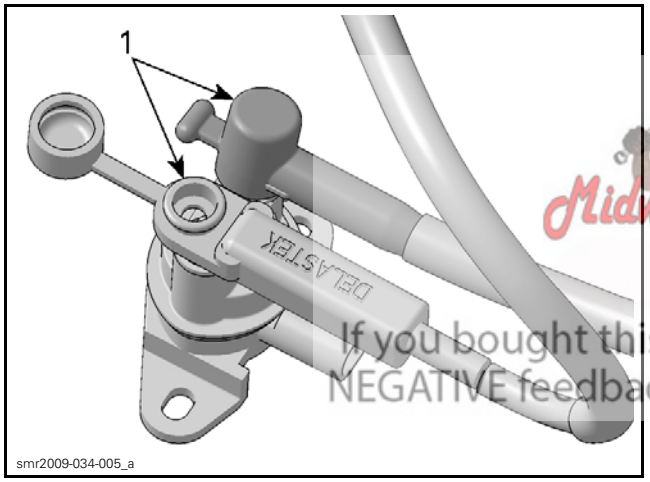

smr2009-034-005_a

TYPICAL
1. Cables

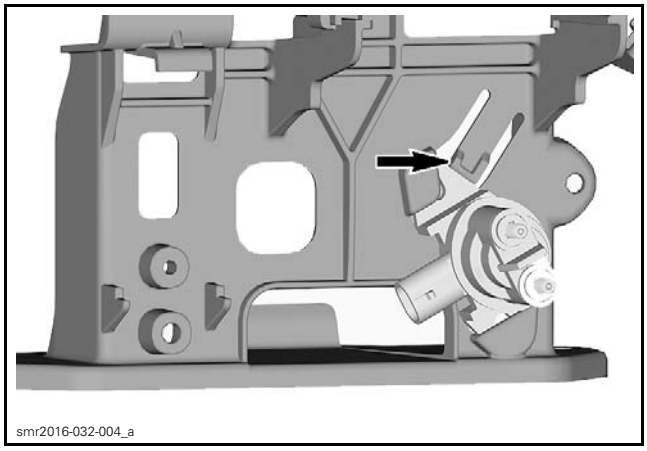

smr2016-032-004_a

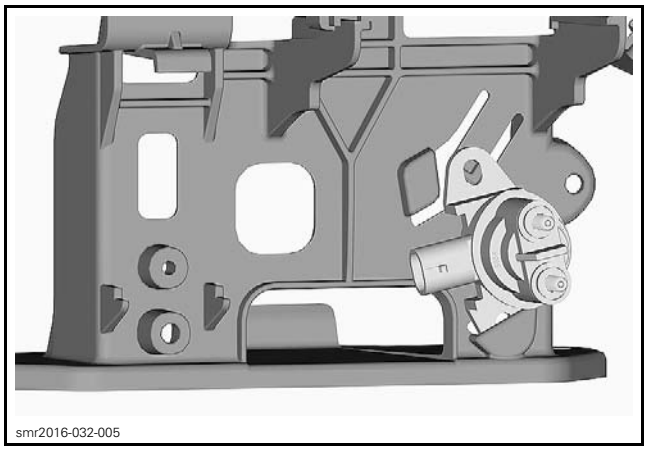

smr2016-032-005

Installing the Solenoid

Reverse the removal procedure and pay attention to the following.

STARTER

For starter information refer to *PTO HOUSING, MAGNETO AND STARTER* subsection.

Midwest Manuals
Green Manuals
Paperless Manuals
For a Better Tomorrow
If you bought this manual from any other seller please leave them NEGATIVE feedback and notify me at bestshopmanuals@gmail.com

RADIO FREQUENCY DIGITALLY ENCODED SECURITY SYSTEM (RF D.E.S.S.)

GENERAL

SYSTEM DESCRIPTION

The following components are specially designed for this system: ECM, D.E.S.S. key (inside tether cord cap) and engine cut-off switch.

The D.E.S.S. key contains a magnet and a RFID chip.

- The magnet closes the hall effect switch inside the engine cut-off switch.
- The RFID chip contains a unique digital code. It is the equivalent of the tooth-pattern cut on a conventional ignition key.

The D.E.S.S. system allows the engine to start only if a tether cord cap is installed on the engine cut-off switch and the D.E.S.S. key is recognized as valid by the ECM.

The D.E.S.S. key is quite flexible:

- Up to 8 D.E.S.S. keys may be programmed in the ECM memory using the B.U.D.S. The keys can also be erased individually.
- The same D.E.S.S. key can be used on another vehicle equipped with the D.E.S.S. system. It only needs to be programmed for that vehicle.

D.E.S.S. Key Types

Three types of keys can be used:

- Normal key
- Learning key
- Rental key.

To ease key type recognition, the tether cord float comes in different colors.

KEY TYPE	FLOAT COLOR
Normal	Yellow or Black
Learning	Green
Rental[1]	Orange
[1] Rental key can be programmed to a rental watercraft only.	

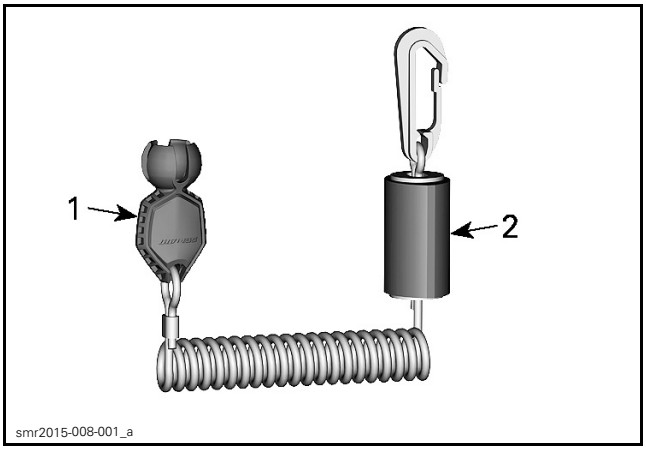

1. D.E.S.S. Key
2. Tether cord float

Upon tether cord installation, the key type used is momentarily displayed by the multifunction gauge.

Both learning and rental keys provide a mode of operation whereby engine power and speed is limited.

There are 5 speed settings available for the learning key mode. By default, the key modes are preset to the speed setting (3). Refer to *INTELLIGENT THROTTLE CONTROL (iTC)* subsection.

NOTE: Changing key settings is only available when the engine is not running.

D.E.S.S. Key Beeper Codes

BEEPER	SIGNIFICATION
A 0.5 second beep every 5 seconds	Indicates the D.E.S.S. is reading the key.
2 short beeps	Indicates the D.E.S.S. recognizes the key.
A 1 second beep every 5 seconds	Indicates the D.E.S.S. does not recognize the key.

NOTE: Other beeps not related to D.E.S.S. can be heard. Refer to *DIAGNOSTIC AND FAULT CODES*.

TROUBLESHOOTING

DIAGNOSTIC GUIDELINES

The following is provided to help in diagnosing the probable cause of a problem. It is a guideline and should not be assumed to list all possible causes.

NO BEEP CODE WHEN KEY IS INSTALLED ON ENGINE CUT-OFF SWITCH — ENGINE CAN NOT BE STARTED

1. **Gauge shuts-down after its WOW test: Defective engine cut-off switch**
   - *Check engine cut-off switch. Refer to IGNTION SYSTEM subsection.*

NO BEEP CODE WHEN KEY IS INSTALLED ON ENGINE CUT-OFF SWITCH — ENGINE CAN BE STARTED

1. **Defective gauge beeper**
   - *Check gauge beeper. Refer to INFORMATION CENTER (GAUGE).*

GAUGE DISPLAYS "READING KEY" AND THERE IS NO KEY INSTALLED ON ENGINE CUT-OFF SWITCH

1. **Gauge shuts-down after 3 minutes: Defective engine cut-off switch**
   - *Check engine cut-off switch.*

PROCEDURES

D.E.S.S. KEY

D.E.S.S. Key Recognition

To allow key recognition, carry out the following steps:

1. Briefly press the START/STOP button to wake up the ECM.
2. Securely install the tether cord on watercraft engine cut-off switch.
3. Press and hold the START/STOP button to start engine.

Programming D.E.S.S. Keys

1. Connect the watercraft to latest applicable B.U.D.S. Refer to *COMMUNICATION TOOLS AND B.U.D.S.* subsection.

IMPORTANT: Ensure all connections have been made **before starting B.U.D.S.** to allow proper operation.

2. Briefly press START/STOP button to power the ECM.
3. Install a tether cord on the engine cut-off switch to program a D.E.S.S. key.

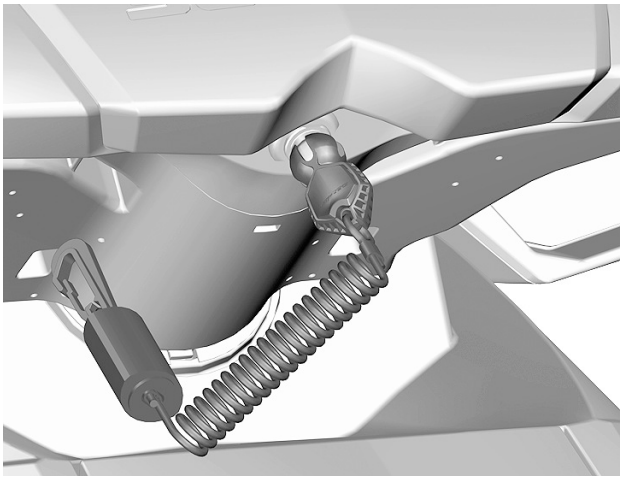

smr2015-008-002

4. Read ECM using **Read Data** button.

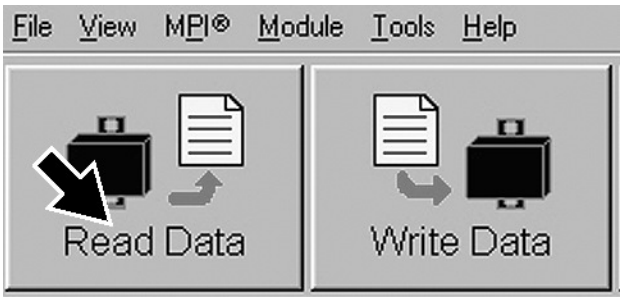

vmr2006-012-100_aen

5. Click on **Keys** tab.

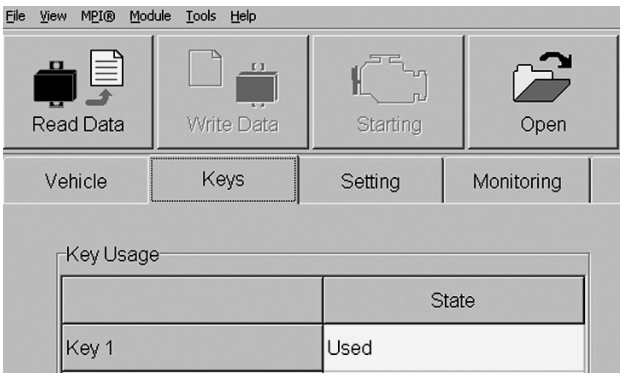

smr2005-072-001_en

Adding a Key

1. Click on the **Add Key** button at the bottom of the screen according to the key type you want to program.

⚠ WARNING

If programming a Learning or Rental key, be sure to use the proper key type (color) to avoid possible confusion.

NOTE: A rental key can be programmed to a rental watercraft only.

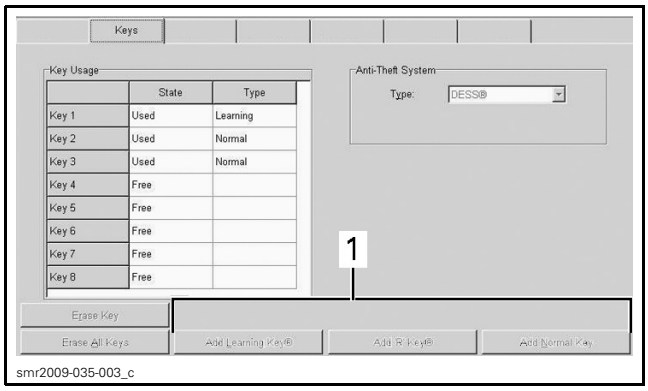

1. **Add Key** *buttons*

2. After approximately 10 seconds, the following window will pop up confirming the new key has been saved **in the PC computer**.

3. If programming is complete, write the changes to the ECM. Refer to *WRITING CHANGES TO ECM* in this subsection.

Adding Another Key

1. Remove the tether cord from the engine cut-off switch.
2. Install the next tether cord on the engine cut-off switch.
3. Click on the **Add Key** button.
4. If programming is complete, write the changes to the ECM. Refer to *WRITING CHANGES TO ECM* in this subsection.

Erasing Keys

1. Install the tether cord on the engine cut-off switch.

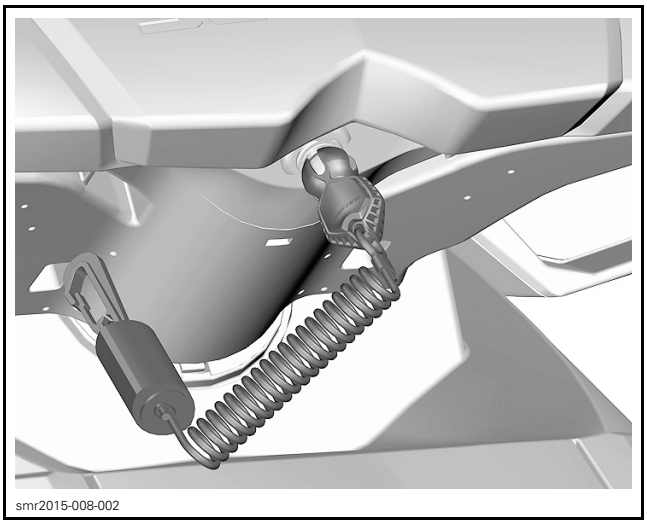

2. Click on **Erase Key** button at bottom of B.U.D.S. screen.

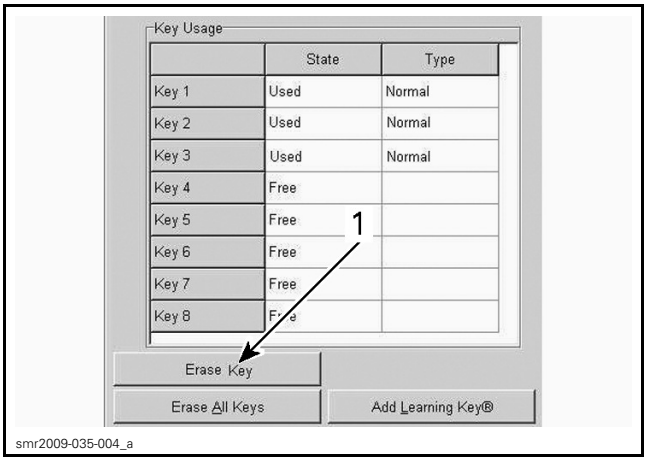

1. Click on this button

After approximately 10 seconds the following message will appear.

The key is now erased **in the PC computer**.

3. If programming is complete, write the changes to the ECM. Refer to *WRITING CHANGES TO ECM* in this subsection.

Erasing Another Key

1. Remove the tether cord from the engine cut-off switch.

2. Install the next tether cord to be erased on the engine cut-off switch.
3. Click on **Erase Key** button.
4. If programming is complete, write the changes to the ECM. Refer to *WRITING CHANGES TO ECM* in this subsection.

Erasing All Keys

1. Click on **Erase All Keys** button at bottom of screen.

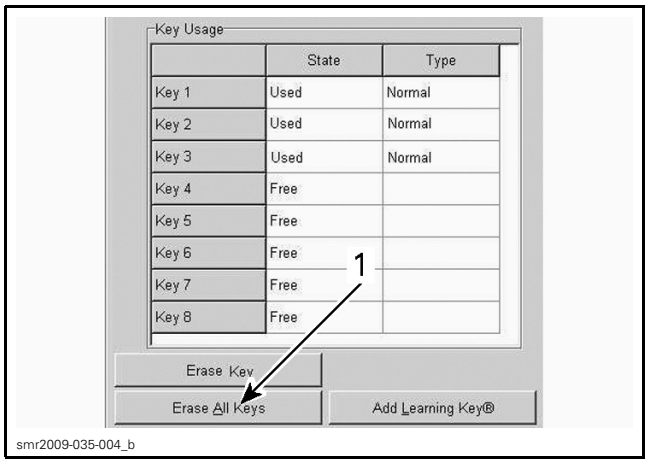

1. Click on this button

NOTE: The following message will be displayed in B.U.D.S.

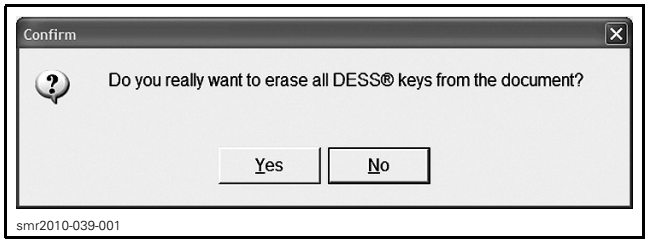

2. Click **Yes** to proceed with erasing all keys.
3. When done, program at least one new key to the vehicle. Refer to *ADDING A KEY* in this subsection.
4. When programming is complete, write the changes to the ECM. Refer to *WRITING CHANGES TO ECM* in this subsection.

NOTE: If there isn't at least one key programmed to the watercraft, B.U.D.S. will not allow you to write the changes to the ECM and will prompt you to add a key.

Writing Changes to ECM

Save the changes made in B.U.D.S. **into the ECM** as follows.

1. Click the **Write Data** button.

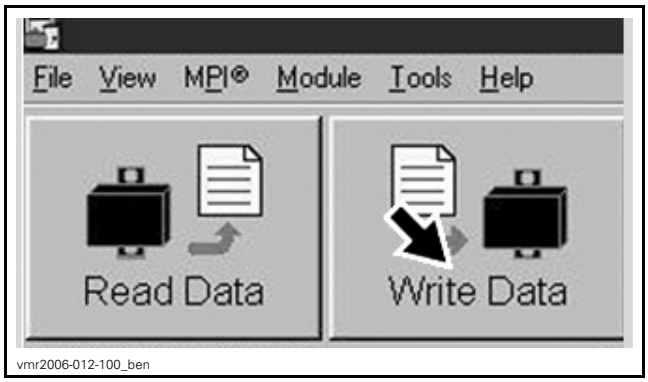

NOTE: If for some reason the writing operation fails, exit B.U.D.S. Restart B.U.D.S. and reenter all the previously lost information.

2. After the write operation, remove key from D.E.S.S. post.
3. Try the key(s) on the watercraft.

D.E.S.S. / Engine cut-off Operation

Normal Operation

MONITORING PAGE, ECM TAB

Refer to *WIRING DIAGRAM*.

RFID CONNECTOR PIN	SPECIFICATIONS
A	ECM ground
B	12 - 15 Vdc
C	5 Vdc
D	12 Vdc

Key Not Read

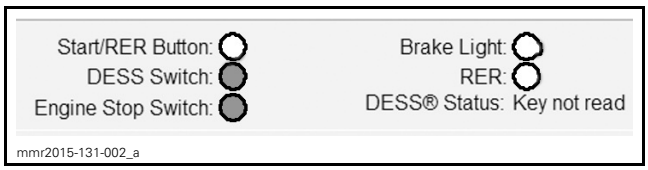

MONITORING PAGE, ECM TAB

Possible causes:

– Damaged RFID chip
– No voltage at RFID-D connector
– No voltage at RFID-C connector

Condition can be duplicated with a magnet on the D.E.S.S. post.

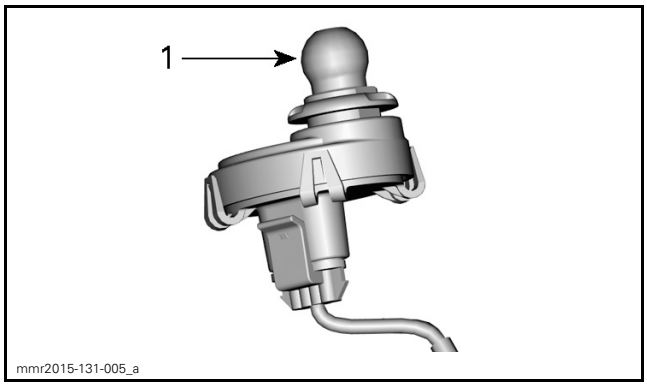

1. D.E.S.S. post

Key Not Present

MONITORING PAGE, ECM TAB

Possible causes:

– No key installed
– No **ground** at RFID-A connector
– No voltage at RFID-B connector
– No voltage at RFID-C connector
– No voltage at RFID-D connector

Condition can be duplicated by unplugging the RFID connector.

Invalid Key

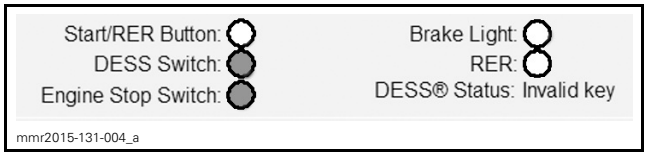

MONITORING PAGE, ECM TAB

Possible causes:

– Key not programmed to ECM

INFORMATION CENTER (GAUGE)

SERVICE PRODUCTS

Description	Part Number	Page
DIELECTRIC GREASE	293 550 004	12, 20

GENERAL

INFORMATION CENTER

⚠ WARNING

Do not adjust the display while riding, you could lose control.

Information Center Description

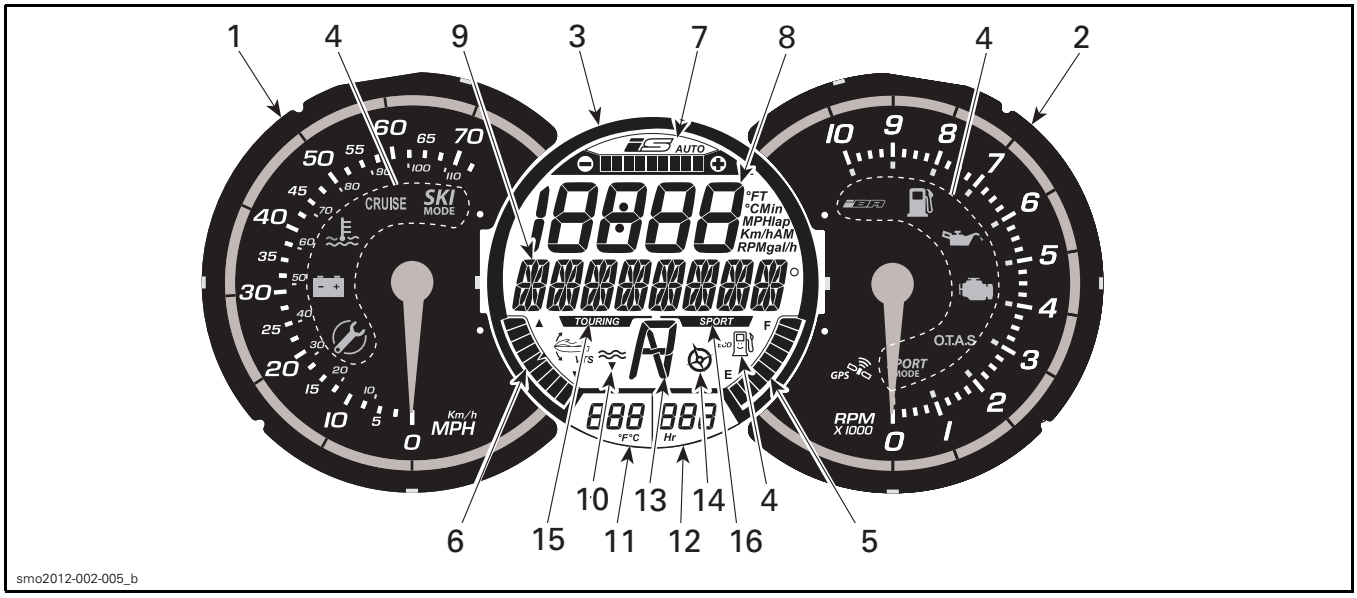

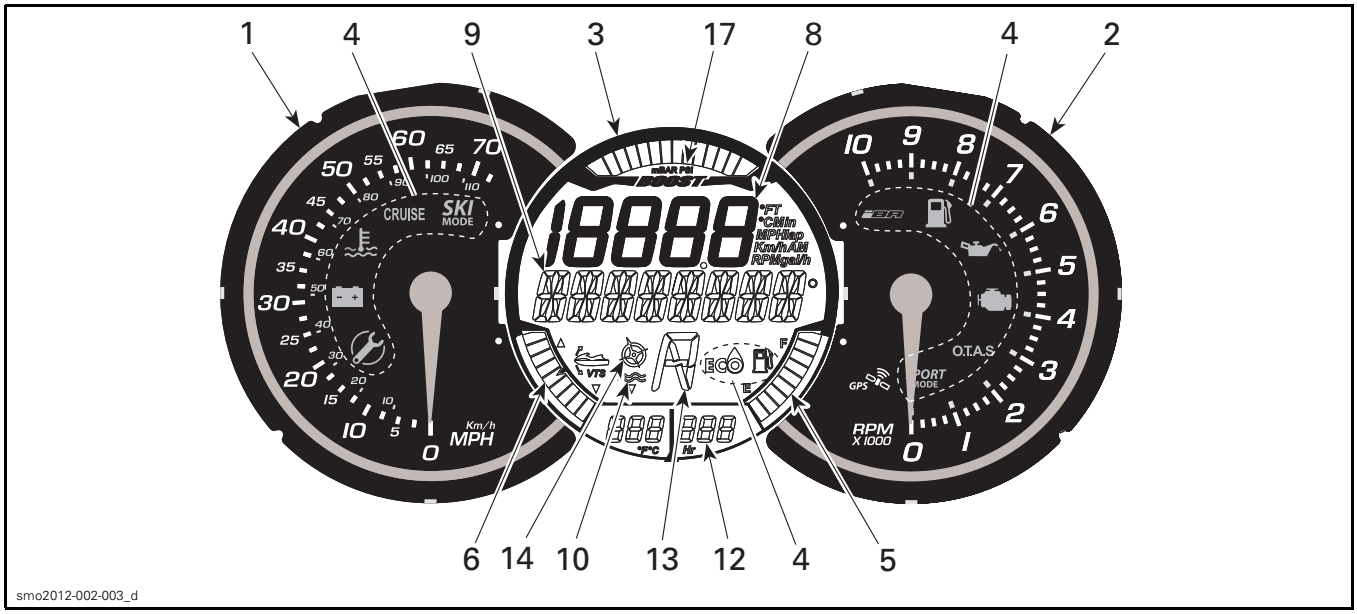

1) Speedometer

The speedometer, located in the LH side of the information center, provides an analog indication of the speed of the watercraft in miles per hour (MPH) and kilometers per hour (km/h).

The speed indication is based on a GPS (Global Positioning System) incorporated within the information center.

If for some reason the GPS signal is lost, a default mode is used whereby, the speed is calculated using information received from other systems to provide an estimated watercraft speed.

2) Tachometer

The tachometer provides an analog indication of the revolutions per minute (RPM) of the engine. Multiply the indicated number by 1000 to obtain the actual engine RPM.

3) Multifunction Gauge

The multifunction gauge, located in the center of the information center, is capable of displaying different indications simultaneously.

Numerical and multifunction displays in the digital screen indicator can be used to display various indications, or for selecting modes of operation and changing settings as explained in their respective sections.

4) Indicator Lights

Indicator lights (pilot lamps), inform you of a selected function or a system anomaly.

An indicator light may be accompanied by a scrolling message in the multifunction display.

See the following table for information on the usual pilot lamps. Refer to *MONITORING SYSTEM* for details on malfunction pilot lamps.

PILOT LAMPS (ON)	MESSAGE DISPLAY	DESCRIPTION
	MAINTENANCE REMINDER	Maintenance required.
	LOW-FUEL	Low fuel level, approx. 25% tank capacity, 14 L (3.7 U.S. gal.) or fuel level sensor disconnected.
CRUISE	Scrolling SLOW SPEED MODE message	CRUISE mode or SLOW SPEED MODE engaged.
SKI MODE	Scrolling SKI MODE messages	Ski Mode activated.
SPORT MODE	Scrolling SPORT MODE messages	Sport Mode activated.

PILOT LAMPS (ON)	MESSAGE DISPLAY	DESCRIPTION
ALL MODELS EXCEPT RXT-X/RXT-X aS MODELS		
	FUEL ECO	Fuel Economy Mode
RXT-X/RXT-X aS		
	FUEL ECO	Fuel Economy Mode activated.

5) Fuel Level Indication

A bar gauge located in the bottom RH side of the multifunction display continuously indicates the amount of fuel in the fuel tank while riding.

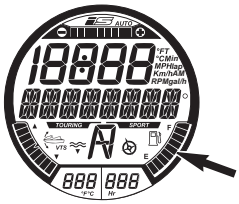

FUEL LEVEL INDICATION

When the fuel tank is full, 8 segments (bars) of the indicator are turned on. The top segment is not used.

Low Fuel Level Warning

It is active when there is only 2 segments of fuel indicated (approximately 25% fuel tank capacity or 14 L (3.7 U.S. gal.).

6) VTS Position

The VTS position indication located in the bottom LH side of the digital screen shows the riding attitude of the watercraft.

A single segment of a bar gauge type indicator is turned on to indicate the relative position of the watercraft bow.

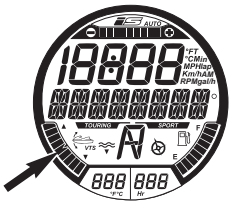

VTS POSITION INDICATION

Refer to *OPERATING INSTRUCTIONS* for more details on using the VTS.

7) iS Position

GTX Ltd iS

The iS display (intelligent Suspension) provides a visual indication of the relative height of the suspension.

It also indicates if the suspension is in AUTO mode of operation.

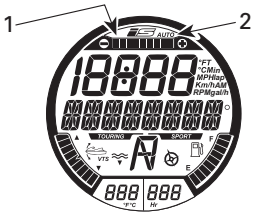

1. iS position indicator
2. iS AUTO mode indicator

When the suspension system is operating in AUTO mode, the AUTO indicator and all bar segments of the position indicator will be on.

When the suspension height is adjusted manually using the UP/DOWN buttons (while in IS mode), the system switches to MANUAL mode of operation. The AUTO indication disappears and only one bar segment of the position indicator will be on.

Refer to *OPERATING INSTRUCTIONS* for more information on using the suspension.

8) Numerical Display

The numerical display is used to provide a variety of indications as selected by the operator using the DISPLAY function in the multifunction display.

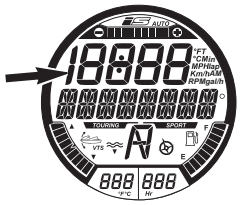

NUMERICAL DISPLAY

The available indications are dependent on the watercraft model or option installed.

When the information center is first powered up, the numerical display defaults to the last selected indication.

9) Multifunction Display

The multifunction display is used to:

– Display the WELCOME message on power up.
– Display the KEY recognition message.
– Provide various indications as selected by the operator.
– Activating and setting various functions and modes of operation.
– Display scrolling messages of function activation or system faults.
– Display fault codes.

NOTE: The default indication in the multifunction display is the compass direction.

10) Water Depth Display

The water depth display provides an indication of the lake water depth.

The system is capable of indicating water depth under the hull in single increments up to 50 m (164 ft).

NOTE: Under certain conditions, the display may stop indicating. The display ability to provide an indication of the water depth depends on the conditions of use.

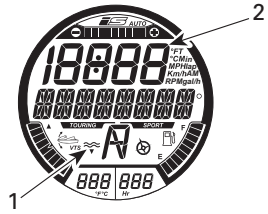

WATER DEPTH DISPLAY

1. Depth finder indicator
2. Water depth indication

NOTE: The water depth indication is only available when a depth finder is installed and detected.

⚠ WARNING

Never use the depth finder as a warning device to ride in shallow water.

11) Lake Water Temperature Display

GTX Limited Only

Continuously displays surface water temperature.

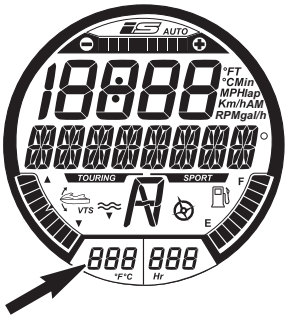

smo2012-002-001_f

The numerical display may also be selected to display water temperature. See *NUMERICAL DISPLAY* in this section.

To change the unit of measurement, refer to *SETTING THE UNITS OF MEASUREMENT AND LANGUAGE* in this subsection.

12) Hour Meter Display (HR)

Continuously displays the accumulated engine hours.

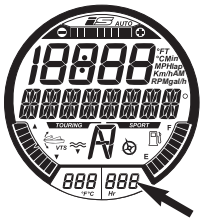

HOUR METER DISPLAY

13) iBR Position

Provides an indication of the iBR gate position.

– N (neutral)
– F (forward)
– R (reverse).

iBR POSITION INDICATOR

14) Compass

A GPS incorporated in the information center provides the indication in the multifunction display.

The cardinal points, intermediate cardinal points, as well as the azimuth the watercraft is travelling are displayed in the multifunction display by default when the watercraft is moving.

For a compass indication to be displayed, the GPS must have a good link with the navigation satellites.

This is confirmed when the COMPASS active indicator is visible in the digital screen.

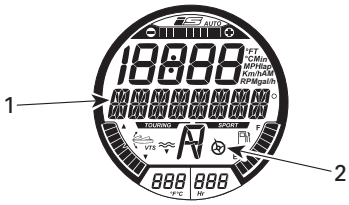

COMPASS (GAUGE WITHOUT BOOST GAUGE)

1. Compass indication
2. Compass active indicator

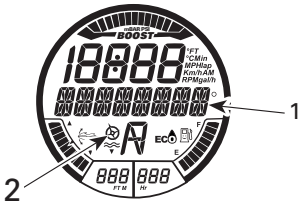

COMPASS (GAUGE WITH BOOST GAUGE)

1. Compass indication
2. Compass active indicator

NOTE: The compass indication is only available above 5 km/h (3 MPH).

⚠ WARNING

Use the compass as a guide only. Not to be used for precision navigation purposes.

15) Touring Mode Indicator

All Models Except RXT-X/RXT-X aS/RXP-X.

When the TOURING mode indicator is ON, the default TOURING mode is active.

TOURING MODE INDICATOR

Refer to *OPERATOR'S GUIDE*.

16) Sport Mode Indicator

SPORT MODE INDICATOR (GAUGE WITHOUT BOOST GAUGE)

When sport mode of operation is selected, the sport mode indicator will come on and stay on until sport mode is deactivated, or the watercraft is shut down.

NOTE: The sport mode is not the default riding mode. To be active, it must be selected after starting the engine.

Refer to *OPERATOR'S GUIDE*.

GTX LTD iS/RXT/WAKE PRO

In addition to the sport mode indicator in the multifunction display, a SPORT MODE indicator light turns ON in the tachometer.

RXT-X/RXT-X aS/RXP-X

There is no sport mode indicator in the multifunction display, only a SPORT MODE indicator light turns ON in the tachometer.

17) Boost Gauge

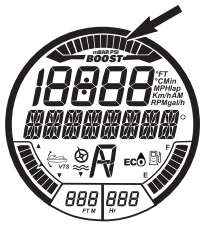

BOOST INDICATOR

The boost gauge indicates the manifold pressure of the engine provided by the supercharger.

Navigating the Multifunction Display

When the electrical system is powered up and the cluster has completed its self test function, a WELCOME ABOARD SEA-DOO scrolling message will appear for a few seconds. After the welcome message, nothing will appear in the display until the watercraft is operated.

When the watercraft is being operated, the multifunction display provides an indication of compass heading or scrolling messages from the monitoring system.

The multifunction display is also used to display a menu for the selection of various functions which, permit changing the numerical display indication, system modes of operation, settings, active system fault codes, and a lap timer.

⚠ WARNING

Selecting various numerical displays, system modes of operation or changing settings should only be carried out with the watercraft stopped. Selecting these various functions while operating the watercraft at speed is not recommended as it deters your attention from situational awareness.

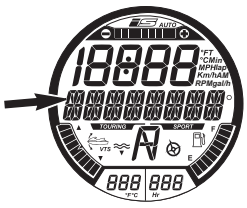

MULTIFUNCTION DISPLAY

To change the unit of measurement, refer to *SETTING THE UNITS OF MEASUREMENT AND LANGUAGE* in this subsection.

Selecting Functions

When operating at speed, the multifunction display normally provides an indication of the compass direction and azimuth the watercraft is traveling.

To select the various functions available through the multifunction display, press the MODE button repeatedly until the desired function is visible:

- LAP TIME
- SKI MODE
- LAP TIME
- FUEL CONSUMPTION
- VTS MODE
- DISPLAY
- FAULT CODES
- KEY MODE
- SETTINGS.

Then press the SET button to enter that function.

NOTE: The fault code function is only available when there is an active fault. The settings and key mode functions are only available when the engine is shut off. The key mode function is only available with a normal key.

Function Description

Lap Timer

The lap timer can be used to record up to 50 individual lap times.

To activate and use the lap timer, carry out the following:

1. Press the MODE button repeatedly until LAP TIME is visible in the multifunction display.

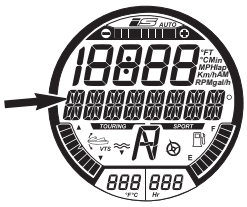

MESSAGE DISPLAYED

LAP TIME

2. Press the SET button to enter the function, the lap timer will be activated and visible in the display.

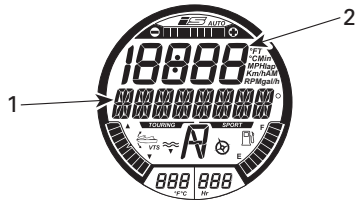

FUNCTION SELECTED: LAP TIMER

1. Lap time
2. Lap count

3. To start the timer, press the SET button.

NOTE: The timer starts immediately when pressing the SET button.

4. To record each lap time, press the SET button at the start of each lap.

NOTE: The lap time will be recorded, the lap counter in the numerical display will count the number of laps recorded, and the timer will continue to run.

5. To save the last lap and stop the timer, press the MODE button.

To view each lap time, use the UP or DOWN button. The lap counter will indicate which lap is indicated.

To view the cumulative lap time of all laps recorded, use the UP or DOWN button until ALL is visible in the lap counter.

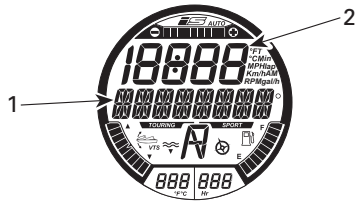

MESSAGE DISPLAYED: LAP TIMER

1. Total time
2. ALL is displayed here

To reset the lap timer and lap counter, press and hold the SET button until the timer and counter are reset to 0 (zero).

Ski Mode

Ski mode is used for repeated controlled launches when towing a skier or wakeboarder. Refer to *OPERATOR'S GUIDE*.

Fuel Consumption

The FUEL CONSUMPTION function is used to display the watercrafts fuel consumption in four different ways.

– Instant fuel flow per hour (gal/h or l/h)
– Average fuel flow per hour (gal/h or l/h)
– Distance to empty (Mi or Km)
– Time to empty (h or min).

The fuel consumption functions are not continuously active.

A fuel consumption function becomes active only when selected as the indication in the numerical display.

When the LOW FUEL indications come on in the multifunction gauge, the "TIME TO EMPTY" and "DISTANCE TO EMPTY" functions will indicate "0" (zero) if they are the selected indication.

To display the watercraft fuel consumption, carry out the following:

1. Press the MODE button repeatedly until FUEL CONSUMPTION is visible in the multifunction display.

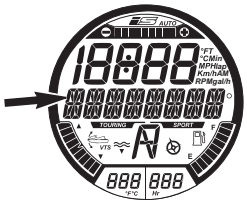

MESSAGE DISPLAYED

FUEL CONSUMPTION

2. Press the UP or DOWN button to toggle to the desired fuel consumption display mode.

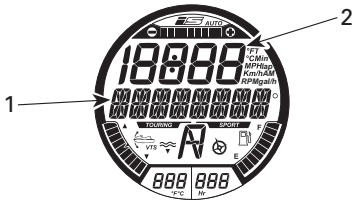

FUEL CONSUMPTION DISPLAY MODE

1. INSTANT FUEL CONSUMPTION message
2. Fuel consumption value

3. Press the SET button to save the setting and return to the main display.

NOTE: The fuel consumption value will be displayed in the numerical display. Double click the SET button to reset the average fuel consumption indication. The display will momentarily indicate zero (0).

VTS Mode

The VTS MODE function is used to manually set the VTS or change VTS PRESET settings. Refer to *OPERATING INSTRUCTIONS* subsection in the *OPERATOR'S GUIDE* for details.

Display

The DISPLAY function is used to change the indication in the numerical display. Refer to *CHANGING NUMERICAL DISPLAY INDICATION*.

Fault Codes

The FAULT CODES function is used to display active fault codes. Refer to *MONITORING SYSTEM* subsection.

Key Mode

The KEY MODE function is used for changing LEARNING key settings. Refer to *OPERATING INSTRUCTIONS* subsection in the *OPERATOR'S GUIDE* for details.

Settings

The SETTINGS function is used for:
- Clock setting. Refer to *MULTIFUNCTION GAUGE SETUP*
- Dock mode setting. Refer to iS (INTELLIGENT SUSPENSION) in the *SUSPENSIONS* subsection
- iBR override function for maintenance.

Changing Numerical Display Indication

To change the indication in the numerical display, carry out the following:

1. Press the MODE button on the RH handlebar repeatedly until DISPLAY is visible in the multifunction display.

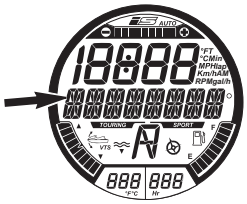

MESSAGE DISPLAYED
DISPLAY

2. Press the SET button to enter the DISPLAY function.
3. Press the UP or DOWN button until the preferred available indication appears.
   - RPM
   - SPEED
   - LAKE TEMPERATURE (only on model GTX Limited
   - DEPTH
   - ENGINE TEMP
   - ALTITUDE (only on Limited models)
   - TOP SPEED
   - AVG SPEED
   - TOP RPM
   - AVG RPM
   - CLOCK.

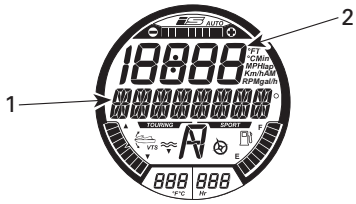

NUMERICAL DISPLAY SELECTION
1. Type of selected numerical display indication 2. Applicable value

4. Press the SET button to select and save the preferred indication, or wait for the display function to time out. The last indication visible will be automatically saved.

The following abbreviations are used in the numerical display:
- FT or M
- RPM
- MPH or Km/h
- °F or °C
- AM or PM
- Gal/h or l/h.

Resetting Numerical Display Indication

The following numerical display indications can be reset:
- Average fuel consumption
- Top speed
- Average speed
- Top RPM
- Average RPM.

To reset indications, double click the SET button. The numerical display will momentarily indicate zero (0).

NOTE: Each of these functions become active ONLY when selected as the numerical display indication.

Multifunction Display Messages

For a list of usual messages that may be displayed in the multifunction display, refer to *MULTIFUNCTION DISPLAY MESSAGES* in this section.

OPERATING MODES

Refer to *OPERATOR'S GUIDE*.

Refer to *INTELLIGENT THROTTLE CONTROL (ITC)*.

MULTIFUNCTION DISPLAY MESSAGES

FAULT MESSAGES	
WRONG KEY	Wrong key selected for model
RIGHT KEYPAD ERROR	MODE/SET, UP/DOWN arrow button malfunction
LOW OIL PRESSURE	Engine low oil pressure detected
HIGH EXHAUST TEMPERATURE	High exhaust temperature detected
HIGH ENGINE TEMPERATURE	High engine temperature detected
CHECK ENGINE	Engine system malfunction or maintenance required
HIGH BATTERY VOLTAGE	High battery voltage detected
LOW BATTERY VOLTAGE	Low battery voltage detected
LIMP HOME MODE	Major fault detected, engine power limited
FUEL SENSOR DEFECTIVE	Fuel level sensor fault
CALIBRATION CHECKSUM ERROR	Cluster programming corrupted, need to be re-flashed using B.U.D.S.
MAINTENANCE REQUIRED	Watercraft maintenance required
DEPTH finder MODULE COMMUNICATION PROBLEM	Error message if depth finder is disconnected while riding
iS MODULE COMMUNICATION PROBLEM	Error message if communication with the suspension module is lost while riding
iBR MODULE ERROR	Error message if communication with the iBR module is lost while riding
OTAS DEFECTIVE – MAINTENANCE REQUIRED	OTAS is not correctly adjusted

TROUBLESHOOTING

DIAGNOSTIC TIPS

NOTE: It is a good practice to check for fault codes using B.U.D.S. software as a first troubleshooting step. Refer to *COMMUNICATION TOOLS AND B.U.D.S.* subsection.

IMPORTANT: When troubleshooting an electrical system fault, check battery condition, cables and connections first.

Electrical System Activation

1. Press the START/STOP button.

NOTE: Pressing the START/STOP button without the tether cord (D.E.S.S. key) installed on the engine cut-off switch will turn on electrical power without starting the engine; the information center will cycle through a self-test function and shut off its display after a few seconds. However, the electrical system will stay powered up for approximately three minutes after the START button was pressed.

2. Install the tether cord on the engine cut-off switch to activate ECM and Information Center when testing procedures require a component or system to be supplied with electrical power.

IMPORTANT: When B.U.D.S. is being used, the ECM will stop communicating with B.U.D.S. approximately 3 minutes after the START button is pressed. Therefore, operations with B.U.D.S. will be interrupted. To reestablish communication, briefly press the START button. **Do not hold** the START button to avoid engine starting.

Circuit Testing

Check the related-circuit fuse condition with a fuse tester or ohmmeter (a visual inspection could lead to a wrong conclusion).

Electrical Connection Inspection

When replacing an electric or electronic component, always check electrical connections. Make sure they are tight, make good contact, and are

corrosion-free. Dirty, loose or corroded contacts are poor conductors and are often the source of a system or component malfunction.

Pay particular attention to ensure that pins are not bent or pushed out of their connectors.

Ensure all wire terminals are properly crimped on wires, and connector housings are properly fastened.

Check for signs of moisture, corrosion or dullness. Clean pins properly and coat them with DIELECTRIC GREASE (P/N 293 550 004) or other appropriate lubricant when reassembling them, except if otherwise specified such as for the ECM connectors.

Pay attention to ground wires.

TROUBLESHOOTING GUIDELINES

Press the START/STOP button and install the tether cord on the engine cut-off switch.

NOTE: Information center should come on, cycle through its self test function, and stay on for approximately 3 minutes after which all electrical power will turn off.

Briefly press the START/STOP button every 3 minutes to reenergize the electrical system. Do not hold the START/STOP button to avoid engine starting.

NOTE: When troubleshooting using the following guidelines, it is important to remember that some indications, functions and features described may not apply to every PWC model, or may be available as an option.

Information Center "Does Not Turn ON"

If the information center does not turn ON when the START/STOP button is pressed, the power circuit or ground circuit to the information center is probably open.

iS Models

Double click the iS button to move the suspension to the up position. If the suspension does not move to the up position, the problem is related to the electrical power system. Refer to *POWER DISTRIBUTION AND GROUNDS* subsection.

If the suspension moves to the up position, the electrical power system is functioning normally.

All Models

Test the 3 A GAUGE/OTAS/CAPS fuse (fuse 12) in fuse box 1 (FB1).

If the fuse tests good, test *INFORMATION CENTER INPUT VOLTAGE*.

If the information center input voltage test is good, test for continuity of the gauge ground circuit (gauge connector pin 11 (BLACK wire) to the ground bus-bar (pin H7) in FB1.

Refer to *WIRING DIAGRAM* for circuit details.

Information Center Turns ON with Some Indications Missing

1. Connect to the latest applicable B.U.D.S. version, refer to *COMMUNICATION TOOLS AND B.U.D.S.* subsection.
2. Read the fault codes, refer to *DIAGNOSTIC AND FAULT CODES* subsection.

If a fault code is related to a communication problem, carry out a continuity test of the CAN bus wires between the applicable module and the CAN bus-bars in FB1. Refer to *WIRING DIAGRAM* and *CONTROLLER AREA NETWORK (CAN)* subsections.

NOTE: The information center, ECM, iS module, iBR module, and the diagnostic connector are linked together through CAN bus-bars in fuse box 1. If one wire of the two wire CAN bus system is open, communication will be slower than normal. Multiple fault codes may be generated and the ECM will put the watercraft in LIMP HOME mode.

If one module cannot be seen in B.U.D.S., the fault may be the wires that link the module to the CAN bus bars, or a problem internal to that module. Test the CAN bus wires from the faulty module to the CAN bus-bars in FB1 for continuity before assuming the problem is the module.

Information Center Goes Blank Except for:

- GPS indicator ON
- Compass ON (if watercraft moving)
- Fuel level ON
- iBR fault indicator light ON
- Indicated speed
- No other indications visible.

There is no communication between the information center and all other modules (ECM, iS, iBR).

Carry out a continuity check of the CAN bus wires from the CAN bus-bars in FB1 to the information center (pins 2 and 3). Refer to the *WIRING DIAGRAM* and *CONTROLLER AREA NETWORK (CAN)* subsections for details.

If an open circuit is detected, carry out same test from the pin steering connector (pins 8 and 20).

All Indications ON Except for:

– LAKE WATER TEMP indication
– VTS indication
– iBR position indication
– CHECK ENGINE light is on.

NOTE: The lake water temperature indication is only available for the GTX Limited model.

The iBR CAN bus circuit is open or the iBR module is at fault.

NOTE: The ECM will generate several fault codes and engage LIMP HOME mode.

Carry out a continuity check of the CAN bus wires from the CAN bus-bars in FB1 to the iBR module (pins 2 and 3). Refer to the *WIRING DIAGRAM* and *CONTROLLER AREA NETWORK (CAN)* subsections for details.

NO RPM Indication and NO Engine Hour Display

If there is NO RPM indication and NO engine hour display, and the watercraft is in LIMP HOME mode, the CAN bus to the ECM is open.

Carry out a continuity check of the CAN bus wires from the CAN bus-bars in FB1 to the ECM module, connector "B" pins C1 and C2 (B-C1 and B-C2). Refer to the *WIRING DIAGRAM* and *CONTROLLER AREA NETWORK (CAN)* subsections for details.

NO iS Position Display

If there is no iS position display (suspension position), the iS module is at fault, or its CAN bus circuit is open.

Carry out a continuity check of the CAN bus wires from the CAN bus-bars in FB1 to the iS module (pins 2 and 3). Refer to the *WIRING DIAGRAM* for details.

NOTE: If communication with the iS module cannot be established when electrical power is first applied, the monitoring system assumes this is a normal situation (PWC not equipped with iS) and will not display an error message.

NO Fuel Level Indication

If there is no fuel level indication, test the fuel level sensor and its wiring circuit to the information center. Refer to *FUEL TANK AND FUEL PUMP* subsection.

NO Depth Gauge Indication

If there is no depth gauge indication available and the depth finder active indicator is not on, refer to *DEPTH FINDER* in this subsection.

NOTE: If communication with the depth finder cannot be established when electrical power is first applied, the monitoring system assumes this is a normal situation (PWC not equipped with depth finder) and will not display an error message.

NO Speed or Compass Indication

To obtain a speed or compass reading and to turn on the GPS indicator, the GPS requires a good uplink to at least three navigation satellites.

If there is no speed or compass indication, look for the GPS indicator icon. If the GPS indicator is off, either the GPS cannot uplink with the satellites, or the GPS system in the information center is at fault.

If another watercraft nearby displays a good GPS uplink (GPS indicator light on in cluster), the information center may need to be replaced.

NOTE: If the GPS uplink is lost while navigating at speed, the speedometer will provide an estimated speed indication based on other parameters. The compass indication will not be available until a good satellite uplink is reestablished.

Speed and Compass Indication Slow to Come ON

When initially powering up the watercraft and driving away, the speed and compass indications may be slow to come on. This is normal as the GPS requires time to establish an uplink with the navigation satellites (cold start).

If the watercraft was run long enough to display the compass and speed indications, shut down for a short period of time and then restarted (hot start), the speed and compass indications should not take more than 30 seconds to come on.

If the speed and compass indications take more than 30 seconds to come on, test for the following:

– GPS fuse 4 in FB1
– Battery voltage at pin 1 of the information center
– Continuity of wire between information center (pin 1) and contact A5 of FB1.

NOTE: This circuit provides 12 Vdc to the GPS in the information center so that it memorizes the satellites it was linked to for a period of two hours. This allows the indications to be available within a few seconds of restarting the watercraft (hot start). After a two hour period, the GPS will have to reestablish new satellite links.

Beeper Does Not Function

The beeper is incorporated within the information center.

If no beep code is heard when installing the tether cord, first ensure ECM is powered. Refer to *ELECTRONIC FUEL INJECTION (EFI)* subsection.

In B.U.D.S., carry out the following:

– **Cluster Buzzer Test** on the cluster activation page
– Check for fault codes. Carry out service actions as applicable.

If the **Cluster Buzzer Test** failed, the ECM is powered, and the ECM and information center are communicating properly through the CAN bus, replace the information center.

PROCEDURES

INFORMATION CENTER

Information Center Self Test Function

When the START/STOP button is pressed momentarily and the vehicle powers up, all LCD segments and indicator lights in the information center will turn **ON for 3 seconds** (self test function). This self test function allows the driver time to ensure that all indications are functioning properly.

It also validates the information centers internal circuits, however, this does not validate proper operation of the individual external circuits and sensors that provide inputs to the information center.

If a system fault is detected by the ECM, the applicable message and/or indicator light will be displayed, and a beep code may be heard.

If the tether cord is not installed, the indications in the information center will shut off a few seconds after the self test function, but the electrical system power stays on for approximately 3 minutes. Installing the tether cord on the engine cut-off switch will turn the indications back on.

If the tether cord is installed, the cluster will stay on for approximately 3 minutes.

NOTE: If the START/STOP button is pressed and held without the tether cord installed, the information center will stay on as long as the START button is held.

Multifunction Gauge Setup

Setting the Clock

1. Press the MODE button repeatedly until SETTINGS is visible in the multifunction display.

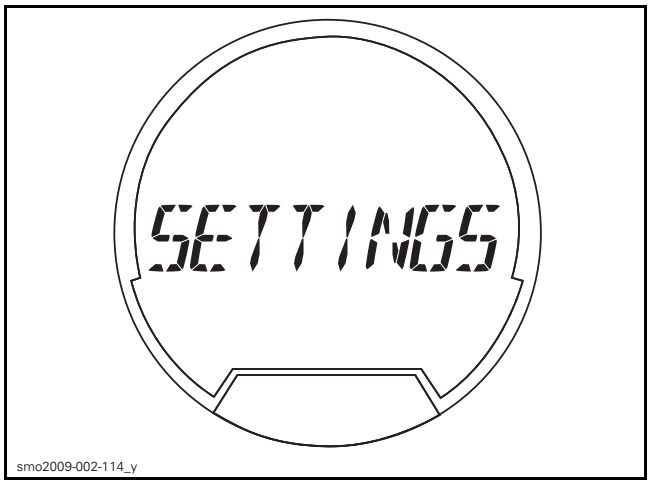

FUNCTION SELECTED: SETTINGS

2. Press the UP or DOWN arrow button repeatedly until CLOCK is visible.

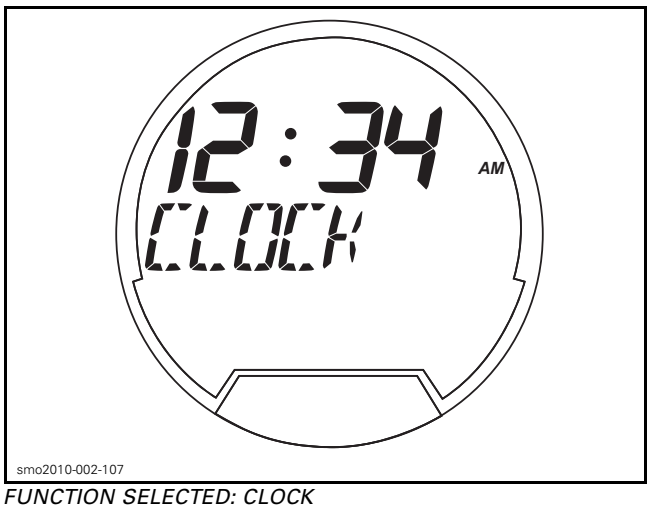

FUNCTION SELECTED: CLOCK

3. Press the SET button to enter the function. CHANGE CLOCK OFFSET message will be displayed.

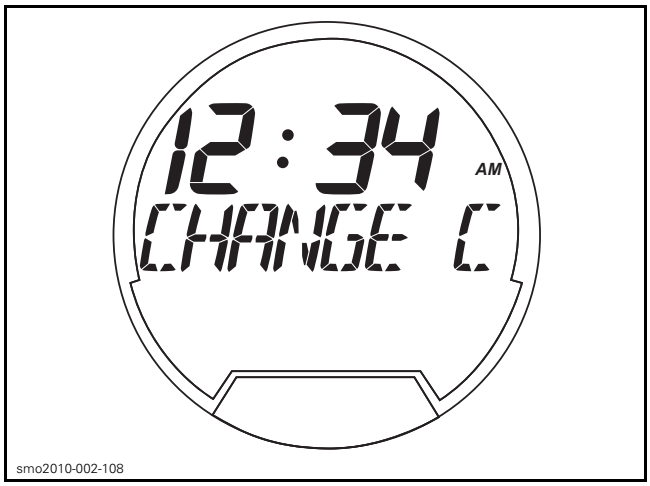

FUNCTION SELECTED: CHANGE CLOCK OFFSET

4. Press the UP or DOWN arrow button to adjust the clock to the correct local time.
5. Press the SET button to save the setting and return to the main display.

NOTE: The clock uses the GPS signal to maintain the appropriate time referenced to Greenwich Mean Time (GMT). When setting the clock, only the hour digits may be changed. For the clock to function, the GPS requires a good satellite uplink.

Setting the Units of Measurement and Language

1. Connect vehicle to the latest applicable B.U.D.S. version, refer to the *COMMUNICATION TOOLS AND B.U.D.S.* subsection.
2. Press the START/STOP button to energize the electrical system.

NOTE: You will need to press the START button every three minutes or the electrical system will shut off.

3. Select the **Read Data** button.
4. Choose the **Setting** tab at the top of the page.

At the bottom LH side of the setting page, select the **Cluster** tab.

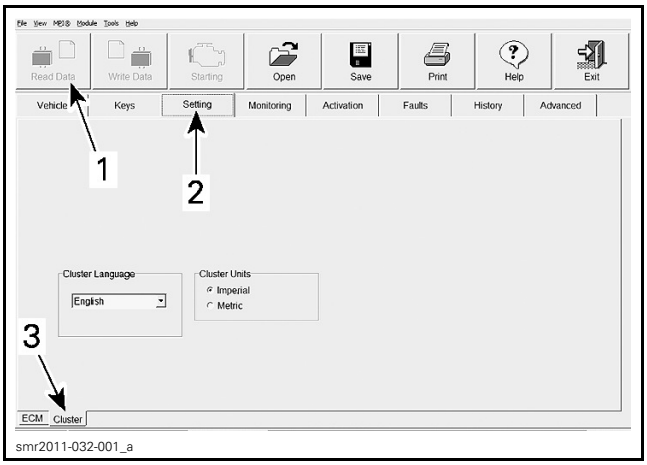

TYPICAL
1. *Read Data*
2. *Setting tab*
3. *Cluster tab*

In the **Cluster Language** field, choose the desired unit of language.

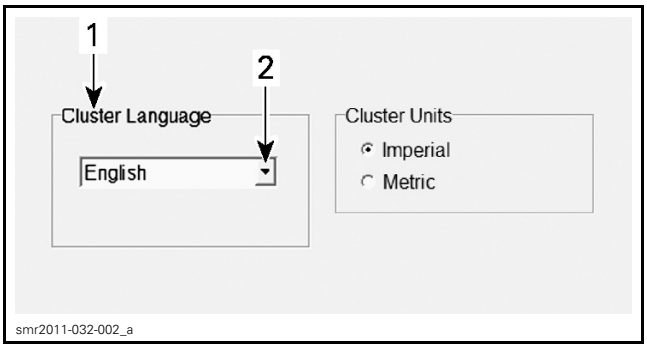

TYPICAL
1. *Cluster Language field*
2. *Click on this arrow to expand list of available languages*

In the **Cluster Units** field, choose the desired unit of measurement, **Imperial** or **Metric**.

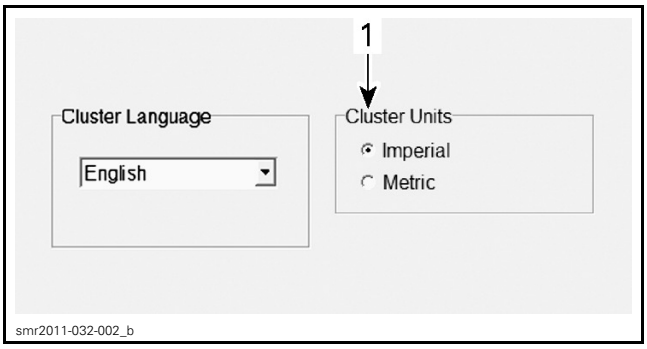

TYPICAL
1. *Cluster Units field*

Clearing the Maintenance Reminder Indicators

When the watercraft, engine or supercharger are due for maintenance, the maintenance reminder indicator will come on, and a scrolling **MAINTENANCE REQUIRED** or **SUPERCHARGER**

MAINTENANCE REQUIRED message will scroll in the digital screen. These maintenance reminders must be cleared using B.U.D.S.

1. Connect vehicle to the latest applicable B.U.D.S. version, refer to the *COMMUNICATION TOOLS AND B.U.D.S.* subsection.
2. Press the START/STOP button to energize the electrical system.

NOTE: You will need to press the START button every three minutes or the electrical system will shut off.

3. Select the **Read Data** button.
4. Choose the **Vehicle** tab at the top of the page.
5. At the bottom RH side of the vehicle page in the **Last Service** field, choose **Reset Service/"Maint"** or **Reset Supercharger Maintenance** button as applicable.

NOTE: If the supercharger maintenance was carried out before the reminder appeared in the information center, the supercharger maintenance reminder must be reset in order to reset the supercharger maintenance hour counter and prevent the reminder from appearing prematurely.

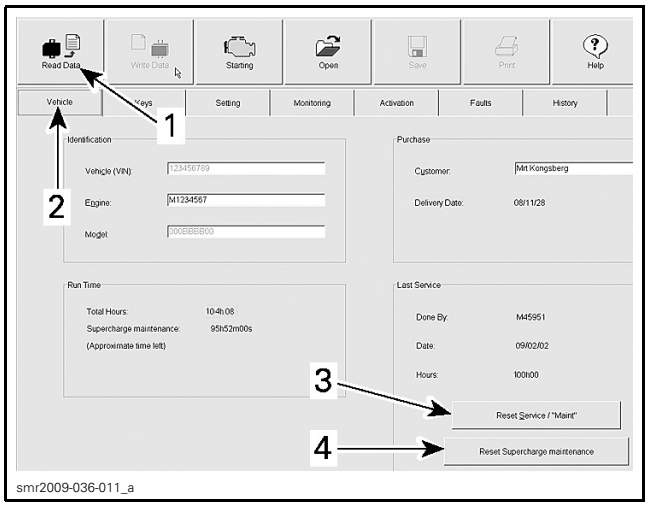

TYPICAL
1. Read Data
2. Vehicle tab
3. Reset Service/"Maint" button
4. Reset Supercharger Maintenance button

Information Center Pin-Out

NOTE: Depending on watercraft model and installed accessories, some multifunction gauge connector pins may not be used. Refer to *WIRING DIAGRAM*.

Testing Information Center Input Voltage

1. Disconnect the gauge connector.
2. Press the START button and install the tether cord on the engine cut-off switch.

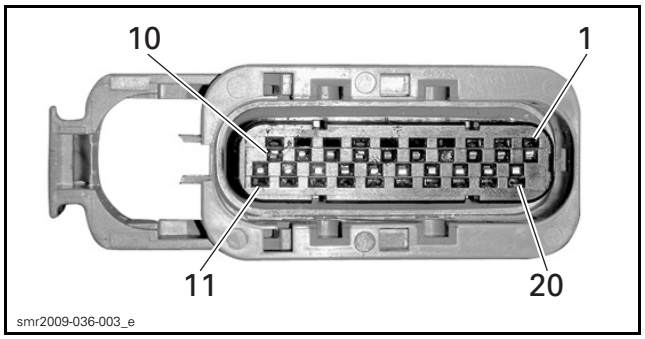

GAUGE CONNECTOR PIN-OUT

INPUT VOLTAGE TEST AT GAUGE CONNECTOR		
PROBE		VOLTAGE
Pin 1 (Hot at all times)	Pin 11 (Permanent ground)	Battery voltage
Pin 12 (Hot with main relay on)		

If battery voltage is measured as specified, replace the information center.

If battery voltage is measured to battery ground but not to pin 11, test *CONTINUITY OF GAUGE GROUND WIRE* circuit from the gauge connector to the ground bus-bar contact in FB1 as described further in this subsection.

3. If battery voltage is not measured at the gauge connector, check wiring. Refer to *WIRING DIAGRAM*.

Testing Gauge Ground Wire Continuity

1. Disconnect the 24-pin steering connector.

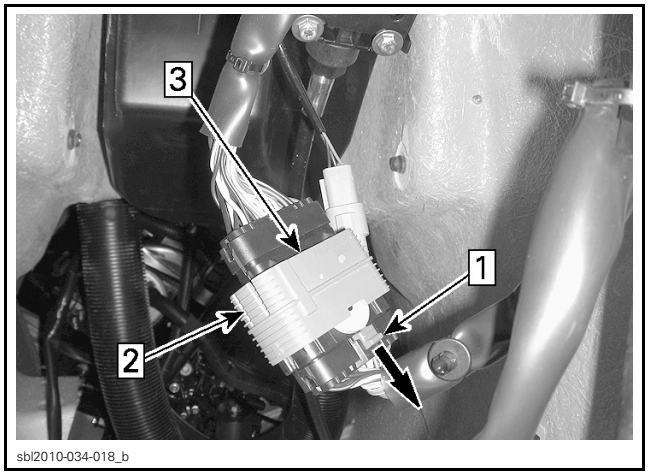

TYPICAL - 24-PIN STEERING CONNECTOR DISCONNECT
Step 1: Pull out safety lock
Step 2: Press in on release tab
Step 3: Pull locking collar down

GROUND TEST AT STEERING CONNECTOR	
PROBE	VOLTAGE
Pin 11 (Permanent ground)	Battery voltage

2. Repair wiring and connectors as required.

Removing the Information Center

smr2016-034-001

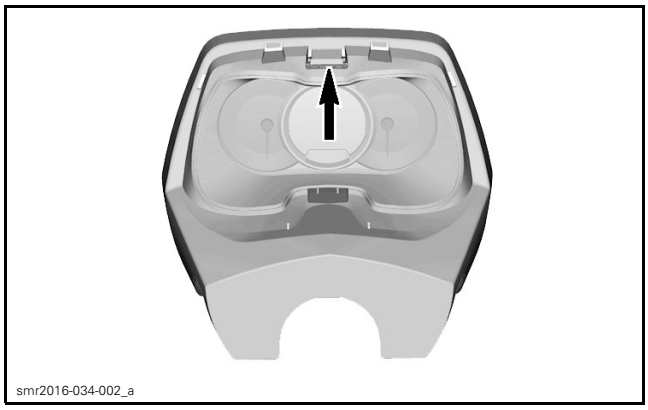
smr2016-034-002_a

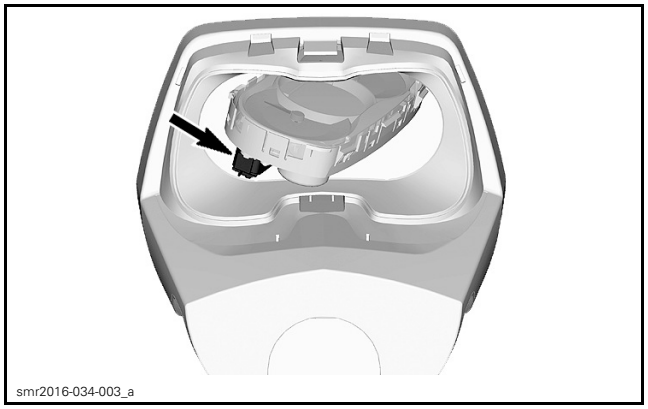
smr2016-034-003_a

Installing the Information Center

Installation of the information center is the reverse of the removal procedure. However, pay attention to the following.

NOTE: If you are installing a replacement information center, refer to *INFORMATION CENTER REPLACEMENT* in this subsection.

After the information center has been replaced, connect the watercraft to the latest applicable B.U.D.S. version and carry out any updates (if required). Refer to *COMMUNICATION TOOLS AND B.U.D.S.* subsection.

Once the information center has been updated (if required), select the applicable settings as described in *SETTING LANGUAGE AND UNITS OF MEASUREMENT* in this subsection.

MODE/SET AND UP/DOWN ARROW BUTTONS

Overview

The MODE/SET and UP/DOWN arrow buttons assembly contains a series of 4 diodes for the MODE and SET switches, and another 4 diodes for the UP/DOWN arrow switches. Refer to *WIRING DIAGRAM* for simplified diagram of switches.

The center wire to the switches (pin C), is common to both sides of the switch assembly (somewhat like a ground wire). The other two wires (pins A and B), act as signal wires to the information center for each set of switches. They actually each form one branch of an electronic circuit within the information center.

Each diode (in circuit) drops a nominal 0.6 Vdc when conducting electricity. If the circuit current passes through all four diodes (say MODE and SET switches open), a drop of 2.4 Vdc would be measured across the 4 the diodes (pin B to pin C). This voltage drop of 2.4 Vdc measured at pin B tells the gauge the MODE and SET switches are open.

If the MODE switch is pressed, 2 diodes are bypassed. The remaining two diodes in the circuit drop 1.2 Vdc (at pin B).

If the SET switch is pressed, 1 diode is bypassed. The remaining three diodes in the circuit drop 1.8 Vdc (at pin B).

The gauge senses these voltages through pin 17 of the gauge connector, and interprets them as signals that tell it which switch is activated.

If the command signal generated by the closure of a switch concerns another module, a circuit within the gauge will translate it to CAN protocol and transmit it through the CAN bus. The applica-

ble module will react to the command, carry out the function, and transmit the result back through the CAN bus.

The information center will use the signals from the switches and the transmitted information from the other modules, convert them to an indication, and cancel the command signal it sent out once the function has been carried out.

Command signals from the MODE and SET switches are used by the information center only.

The UP/DOWN arrow switch commands are used by the gauge for certain functions and settings. They will also be translated and sent out through the CAN bus to be used by the ECM for the CRUISE, SKI mode and SLOW SPEED functions for increasing or decreasing speed when the functions are active, and by the iBR for iBR gate positioning in SLOW SPEED mode of operation.

The UP/DOWN switches are also used for VTS trim on models without VTS buttons.

NOTE: The voltages stated previously vary slightly depending on the actual voltage applied to the circuit and the current flow through the diodes. When using a Fluke 115 multimeter for testing in diode test mode, the voltage and current applied by the multimeter are lower than in circuit. The quality of probe contact, the actual probes and leads, and the precision of the meter calibration will all affect the results, which will most likely be slightly lower than nominal values stated.

Testing MODE/SET and UP/DOWN Buttons Using B.U.D.S.

1. Connect the watercraft to the latest applicable B.U.D.S. version. Refer to *COMMUNICATION TOOLS AND B.U.D.S.*
2. Press the START/STOP button to energize the electrical system.

NOTE: You will need to press the START button every three minutes or the electrical system will shut off.

3. Select the **Read Data** button.
4. Choose the **Monitoring** tab at the top of the page.
5. At the bottom LH side of the monitoring page, select the **Cluster** tab.

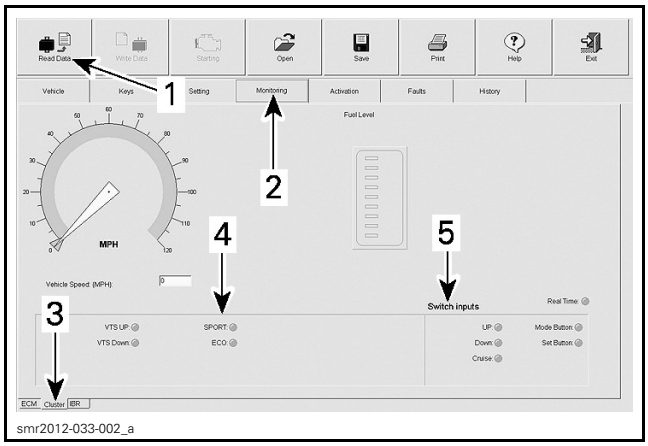

smr2012-033-002_a

1. *Read Data button*
2. *Monitoring tab*
3. *Cluster tab*
4. *LH switch inputs field*
5. *RH switch inputs field*

6. Press each of the MODE/SET and UP/DOWN arrow buttons and look for the applicable indicator light to come on in the **Switch inputs** field on lower RH side of the cluster page (Mode, Set, Up or Down).

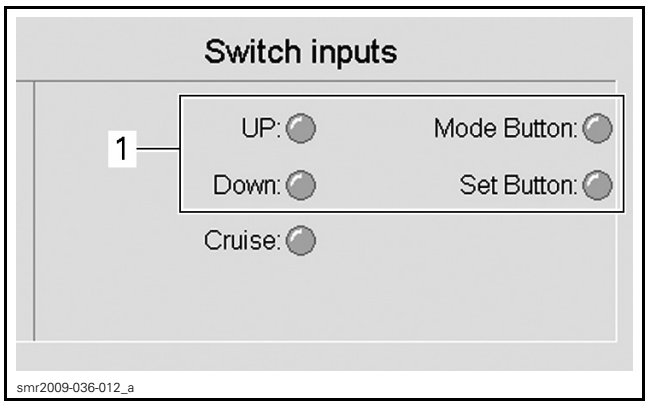

smr2009-036-012_a

SWITCH INPUTS
1. *MODE/SET and UP/DOWN arrow button indicator lights*

If each of the gauge button indicator lights come on when the applicable switch is pressed, the problem may be related to the information center.

If one or all of the indicator lights does not come on, test *MODE/SET AND UP/DOWN ARROW SWITCH USING A MULTIMETER*.

Testing MODE/SET and UP/DOWN Switch

NOTE: It is important to set the multimeter to the diode check function when testing the MODE/SET and UP/DOWN arrow switches as it contain diodes.

1. Test the MODE/SET and UP/DOWN arrow switches as per following tables.

MODE/SET SWITCH TEST			
SWITCH POSITION	FLUKE 115	GAUGE CONNECTOR	VOLTAGE
Switch released	RED lead BLACK lead	Pin 17 Pin 18	Approx. 2 Vdc or OL (see note 1)
	BLACK lead RED lead	Pin 17 Pin 18	OL
MODE depressed	RED lead BLACK lead	Pin 17 Pin 18	Approx. 1.1 Vdc
	BLACK lead RED lead	Pin 17 Pin 18	OL
SET depressed	BLACK lead RED lead	Pin 17 Pin 18	Approx. 1.6 Vdc
	BLACK lead RED lead	Pin 17 Pin 18	OL

UP/DOWN ARROW SWITCH TEST			
SWITCH POSITION	FLUKE 115	GAUGE CONNECTOR	VOLTAGE
Switch released	RED lead BLACK lead	Pin 16 Pin 18	Approx. 2 Vdc or OL (see note 1)
	BLACK lead RED lead	Pin 16 Pin 18	OL
UP depressed	RED lead BLACK lead	Pin 16 Pin 18	Approx. 1.1 Vdc
	BLACK lead RED lead	Pin 16 Pin 18	OL
DOWN depressed	RED lead BLACK lead	Pin 16 Pin 18	Approx. 1.6 Vdc
	BLACK lead RED lead	Pin 16 Pin 18	OL

NOTE: Remember that each diode should drop approximately 0.6 Vdc when positively biassed, and read as an OL (open circuit) when negatively biassed (leads reversed).

Note 1: May be OL on some multimeters.
If the readings are correct when testing with the switch depressed UP and DOWN, while it was OL with the switch released, then the switch is functional.

When measuring between pins 17 and 18, or 16 and 18, if an OL is obtained with both positive and negative diode biassing, test the continuity of each wire between the gauge and switch assembly. If continuity is good, replace the switch assembly.

If any reading is significantly different than specified, carry out the same test at the switch connector, refer to the wiring diagram. If you obtain the same results, replace the switch assembly.

If voltages measured on every switch are as specified (or very close to it), the switches and the wiring harness are good. The fault may be within the gauge. Replace the gauge.

Replacing the MODE/SET and UP/DOWN Switch Assembly (Except X Package)

1. Remove steering cover, refer to *STEERING AND O.T.A.S.* subsection.

2. Disconnect connector from switch assembly.

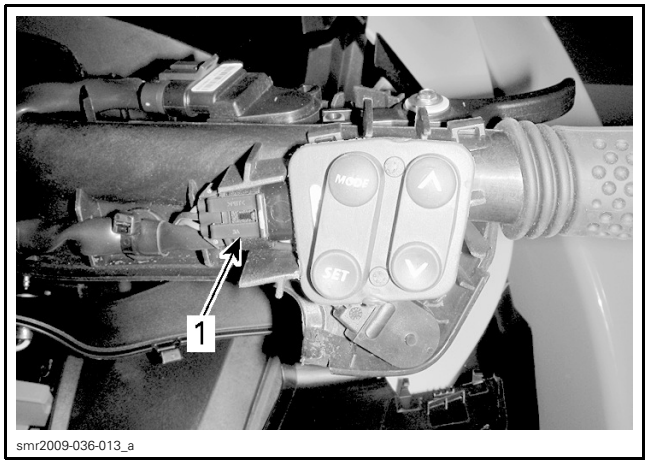

TYPICAL - GTX LIMITED iS ILLUSTRATED
1. MODE/SET and UP/DOWN switch connector

3. Remove switch assembly from support by lifting it off the support.
4. As applicable, ensure wiring from cruise switch is properly inserted in slot provided before installing MODE/SET and UP/DOWN arrow switch assembly.

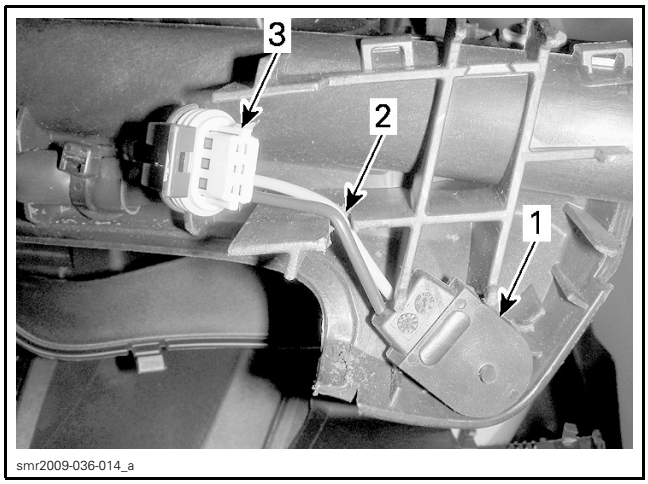

TYPICAL - GTX LIMITED iS ILLUSTRATED
1. Cruise switch
2. Wiring in slot provided in support
3. MODE/SET and UP/DOWN arrow switch connector

5. Apply a small amount of DIELECTRIC GREASE (P/N 293 550 004) on switch contact pins.
6. Install connector on new switch assembly.
7. Insert switch assembly in switch support.
8. Install steering cover, refer to *STEERING AND O.T.A.S.*

Replacing the MODE/SET and UP/DOWN Switch Assembly (X Package Only)

Removing the Switch

1. Remove the 2 screws in the front of the upper handlebar housing.

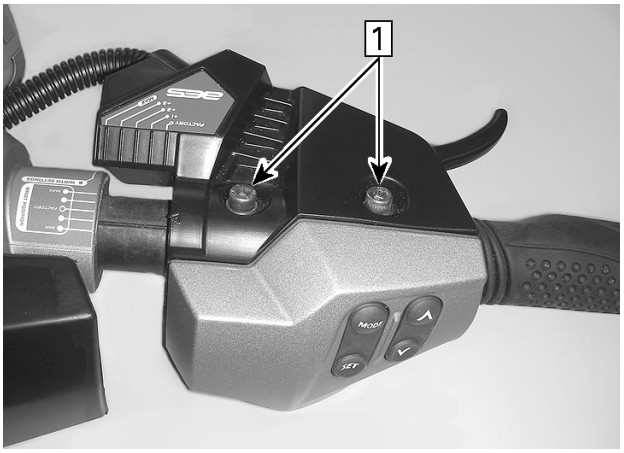

Step 1: Remove these two screws

2. Remove the screw at back of the handlebar.

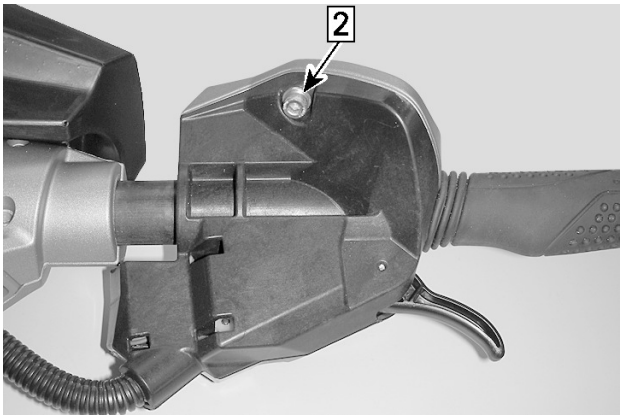

Step 2: Remove this screw

NOTICE **Do not try to pull the cover off the housing at this time or damage to the cover will occur.**

3. Take hold of the housing cover to prevent it from falling off the handlebar when unlocking the upper housing in the following step.
4. Using a small screwdriver, unlock the tab that retains the upper housing and pull the upper housing off.

NOTICE **As you remove the upper housing, hold on to the housing cover to prevent it from falling off the handlebar.**

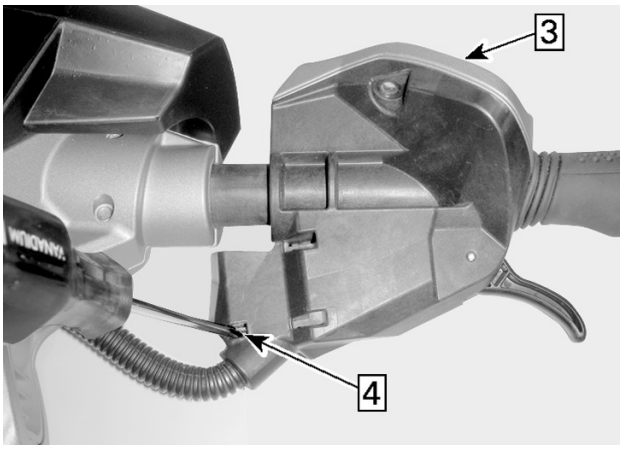

smr2010-031-003_a

Step 3: Hold on to this housing cover
Step 4: Unlock this tab

5. Remove the housing cover from the handlebar.

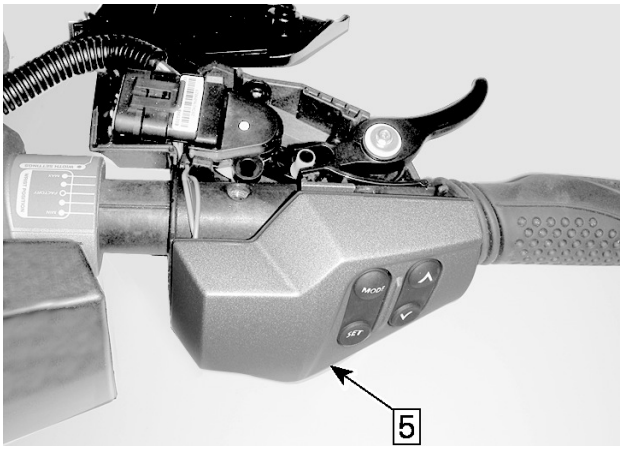

smr2010-031-004_a

Step 5: Remove housing cover

6. Remove switch from handlebar housing.
7. Remove connector from switch.

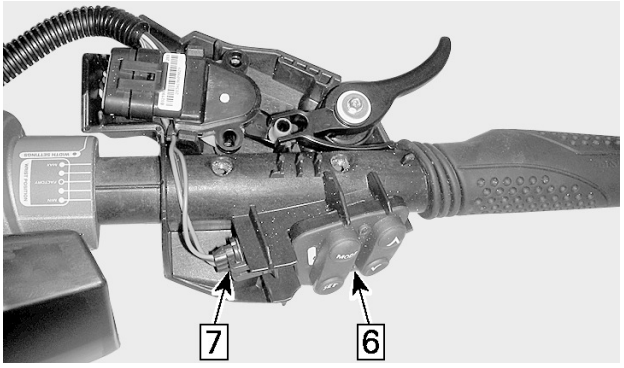

smr2010-040-001_c

Step 6: Remove switch
Step 7: Remove connector

Installing the Switch

Installation is the reverse of the removal procedure however, pay attention to the following.

1. Install connector on switch assembly.
2. Insert switch assembly in handlebar housing.
3. Ensure proper wire routing.
4. Ensure proper positioning of corrugated conduit.

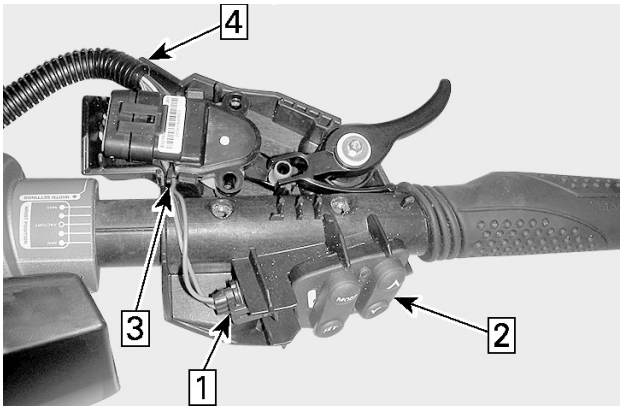

smr2010-040-001_b

Step 1: Install connector
Step 2: Insert switch in handlebar housing
Step 3: Ensure proper wire routing
Step 4: Ensure proper positioning of corrugated conduit

5. Ensure engagement of housing cover retaining tabs.
6. Ensure engagement of upper housing locking tabs.

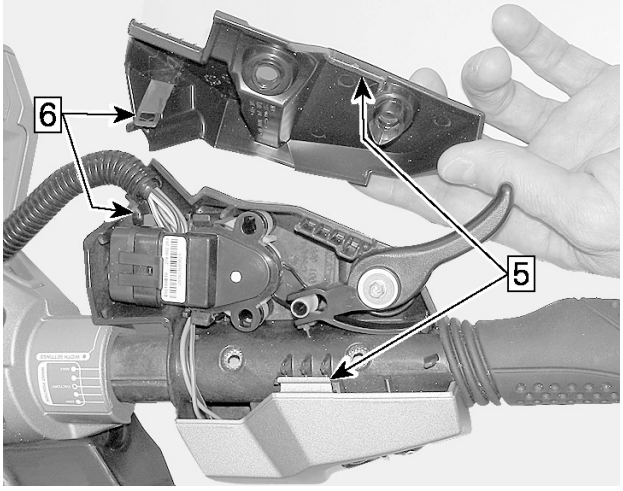

smr2010-031-010_c

Step 5: Ensure engagement of housing cover retaining tabs
Step 6: Ensure engagement of upper housing locking tabs

7. Position the upper housing on the handlebar housing.
8. Ensure proper engagement of the upper housing and cover tabs.

9. Install the three retaining screws for the upper housing and tighten them as specified.

UPPER SWITCH HOUSING SCREW TORQUE
2 N•m (18 lbf•**in**)

10. Connect watercraft to the latest applicable B.U.D.S. version, refer to *COMMUNICATION TOOLS AND B.U.D.S.* subsection.
11. Ensure there are no fault codes, refer to *DIAGNOSTIC AND FAULT CODES* subsection.
12. Ensure proper operation of throttle lever and switch assembly.

WATER TEMPERATURE SENSOR

The water temperature sensor is connected to the ECM.

Water from the jet pump passes through the intercooler inlet hose where the sensor measures its temperature, generating a signal that is interpreted by the ECM module. The ECM module then sends the information through the can-bus to the information center that translates it into a temperature indication.

If the temperature display is 0 degrees, water temperature sensor might be defective. Verify water temperature sensor and replace if necessary.

DEPTH FINDER

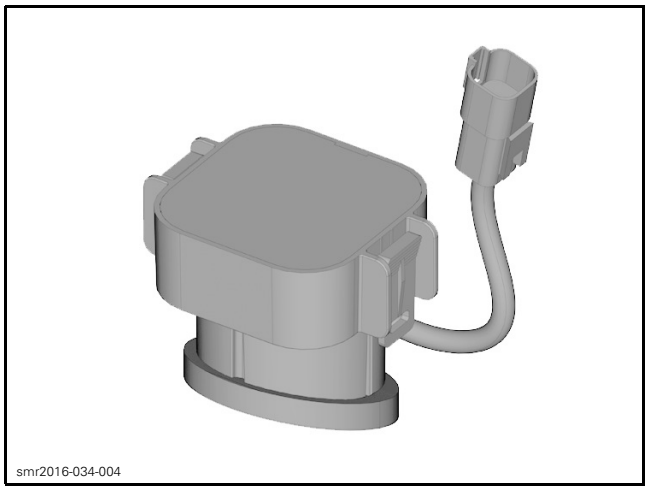
smr2016-034-004

⚠ WARNING

Never use the depth gauge as a warning device to ride in shallow water. Use it as a navigation guide only. Not to be used to get precise navigation data.

Depth Finder Troubleshooting

DEPTH FINDER TROUBLESHOOTING		
SYMPTOM	POSSIBLE CAUSE	REMEDY
Nothing is displayed in the information center	Depth finder not connected.	Properly connect depth finder.
	Depth finder not properly installed.	Make sure depth finder is properly installed in battery holder base. There must be no air gap between hull and silicone pad(s).
	12 Vdc wire or ground wire to depth finder open.	Check fuse and wiring harnesses.
	Problem with communication link wires.	Check wires to CAN bus-bars in FB1.
- - - - (ft or m) is displayed	Watercraft is not in water.	Launch watercraft in water and recheck.
	There is air between silicone pad and depth finder or between depth finder and battery holder base.	Remove depth finder. Replace silicone pad.
	Depth finder is defective.	Try a new depth finder.

Replacing the Depth Finder

Do not attempt remove the depth finder. Epoxy glue holds it in place.

Order a new depth finder from accessories (PAC) and follow the instructions provided with the kit.

Testing Depth Finder Operation

1. Press START/STOP button to activate gauge.
2. Confirm the depth finder icon is active in gauge.
3. If icon is not active, check in BUDS that icon box is checked.

NOTE: When watercraft is not in water, the icon is active but there is no reading. To verify proper operation, launch watercraft in water and compare depth indication with actual depth.

STEERING AND O.T.A.S.

SERVICE TOOLS

Description	Part Number	Page
DIAGNOSTIC HARNESS	529 036 188	22–23
FLUKE 115 MULTIMETER	529 035 868	22–23
STEERING CABLE TOOL	295 000 145	16

SERVICE PRODUCTS

Description	Part Number	Page
LOCTITE 243 (BLUE)	293 800 060	9, 12
LOCTITE 567 (PIPE SEALANT)	293 800 013	16
XPS SYNTHETIC GREASE	293 550 010	14

STEERING COLUMN

GTX, GTX iS, RXT and Wake Pro

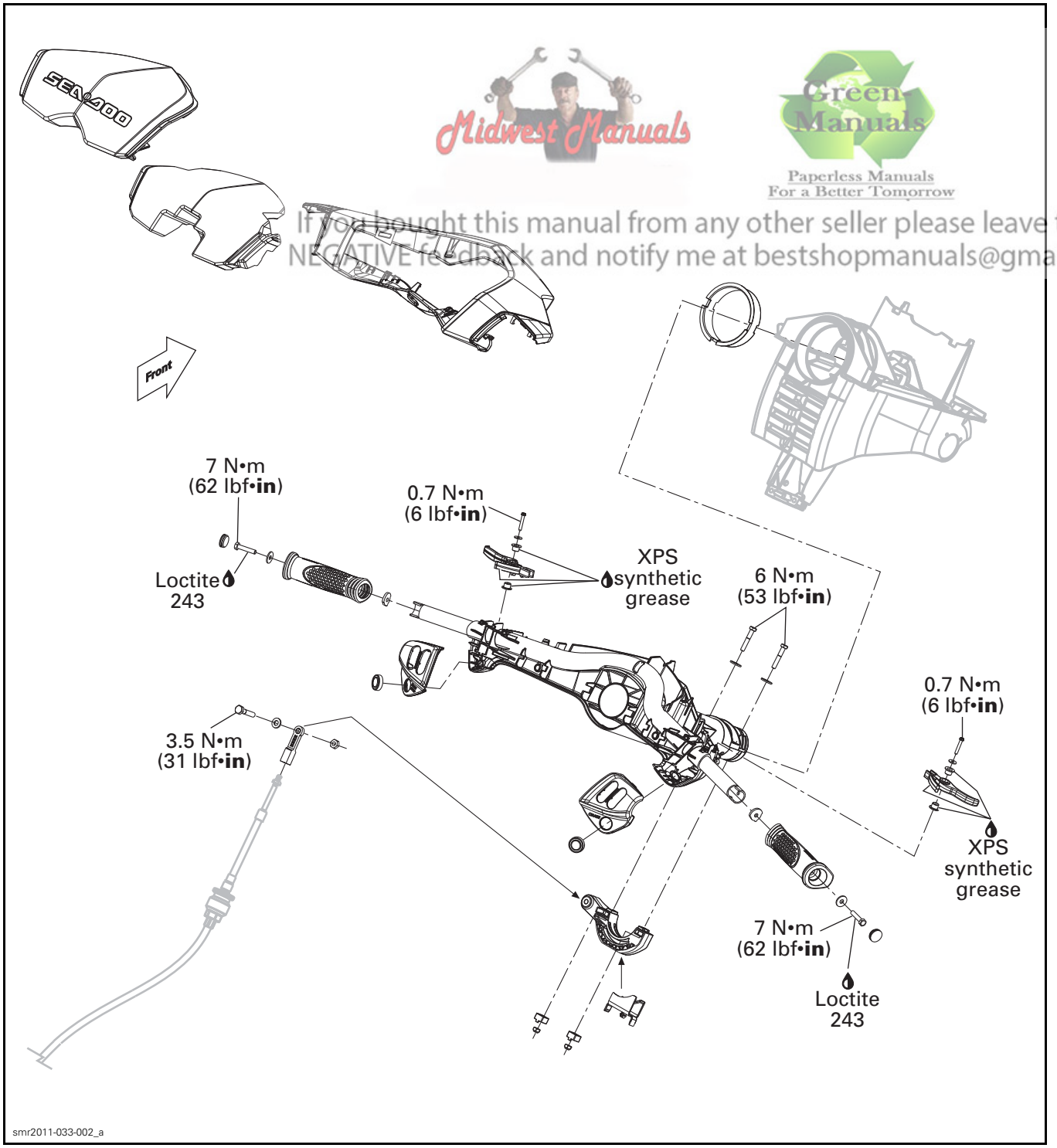

Midwest Manuals
Green Manuals
Paperless Manuals
For a Better Tomorrow
If you bought this manual from any other seller please leave them
NEGATIVE feedback and notify me at bestshopmanuals@gmail.com

STEERING COLUMN

RXT-X, RXT-X aS and RXT-X rs

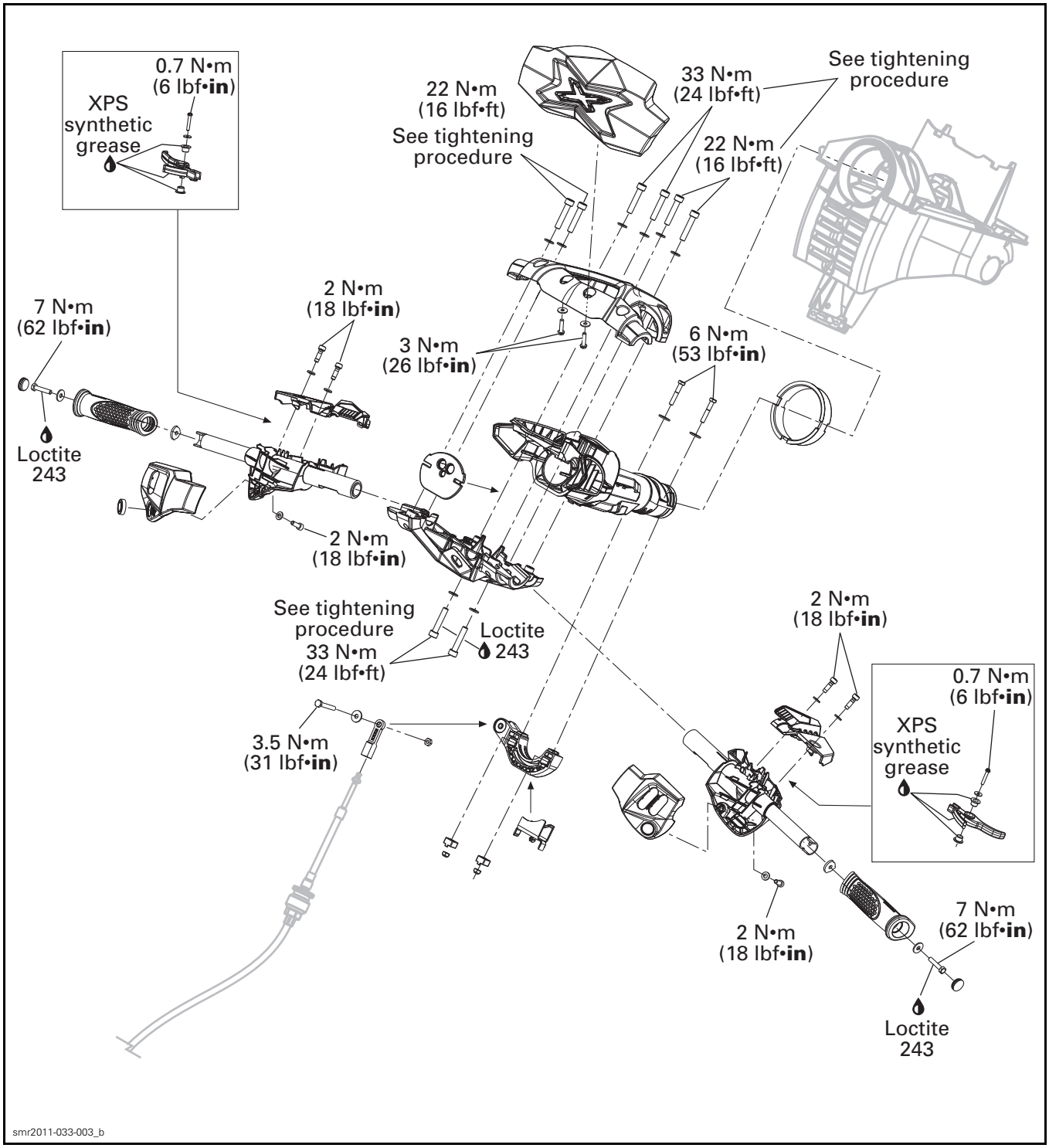

STEERING COLUMN AND CABLE

RXP-X Series

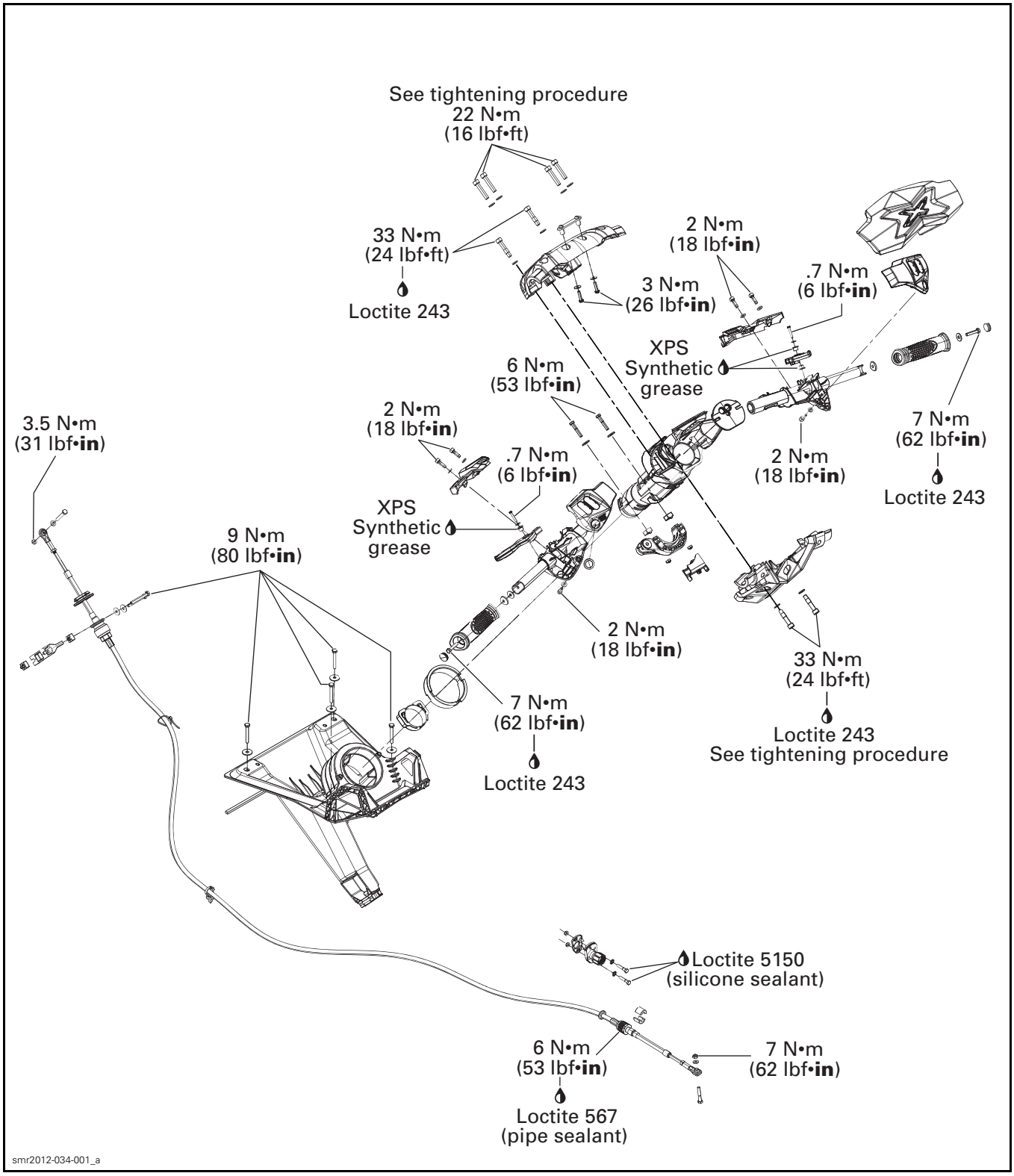

STEERING COLUMN SUPPORT AND CABLE

GTX/RXT Series and WAKE PRO

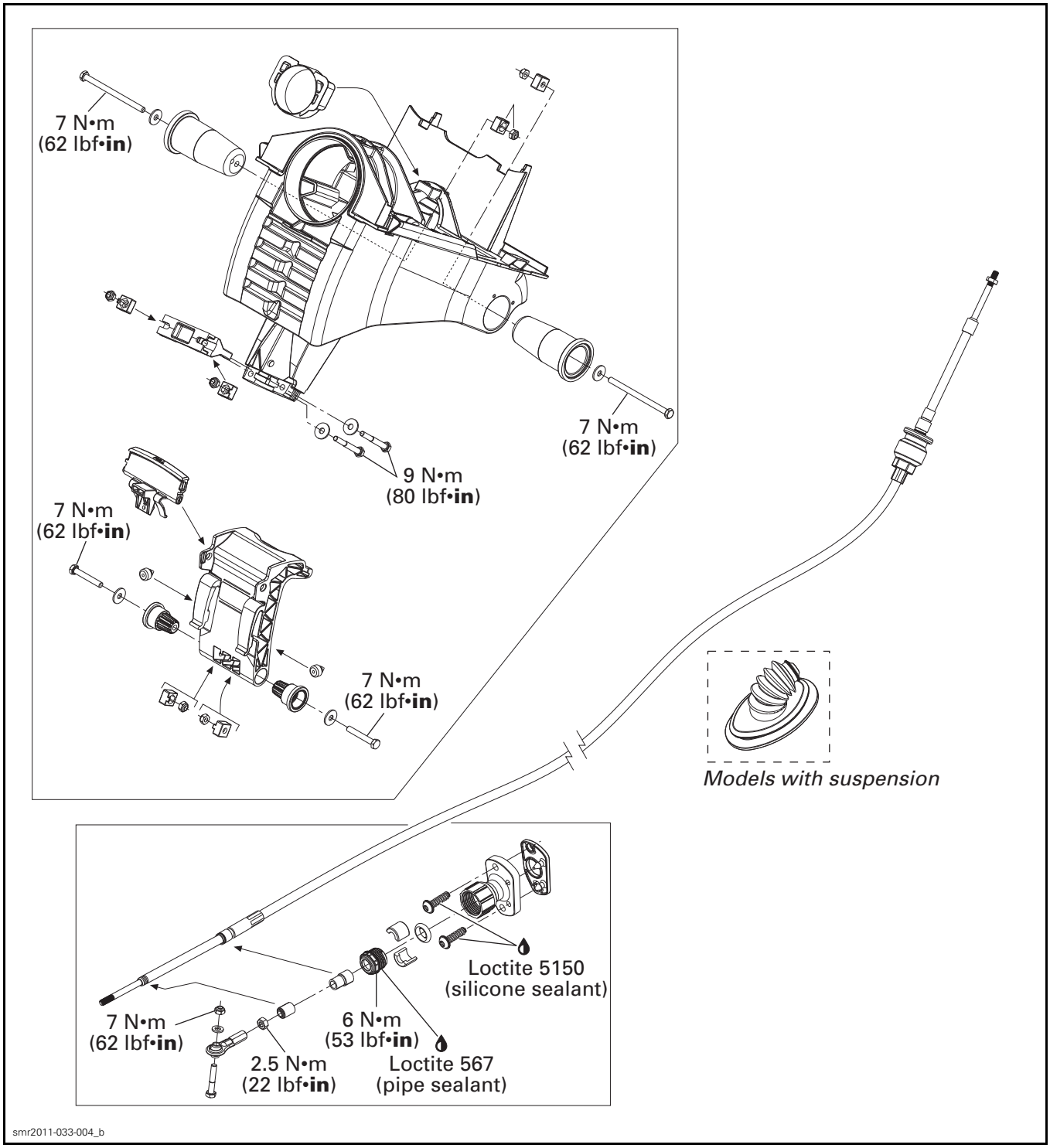

GENERAL

SYSTEM DESCRIPTION (O.T.A.S.)

The O.T.A.S. (Off-Throttle Assisted Steering) provides additional maneuverability in off-throttle situations.

The system uses a pair of magnets attached to the steering column and a Hall effect switch attached to the steering column support.

When activated by a magnet, the O.T.A.S. switch sends a signal to the ECM.

The ECM activates a pre-programmed RPM setting when the driver initiates a full turn after releasing throttle lever. The engine RPM is controlled by the Intelligent Throttle Control (iTC).

The O.T.A.S. system is activated in the following conditions:

– The engine speed must be above 4000 RPM for at least 1.5 second (approximately).
– The throttle lever must be released completely.
– The steering must be fully turned within approximately 4 seconds after throttle release.

The O.T.A.S. will stay activated for a random period of time as long as the O.T.A.S. switch is closed.

O.T.A.S. will be deactivated if:

– The throttle is reapplied, or
– The steering is turned sufficiently to open the O.T.A.S. switch for more than one second.

ADJUSTMENT

ADJUSTING THE ALIGNMENT OF THE STEERING

Models without Suspension

Work from engine compartment to reach adjustment nut.

1. Loosen steering cable clamp bolts. Do NOT remove bolts.

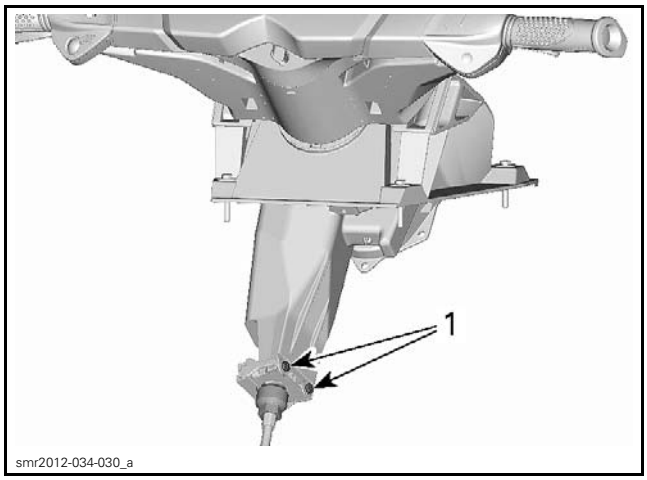

ACCESS FROM ENGINE COMPARTMENT
1. Loosen bolts

2. Turn adjustment nut 1 turn at a time in the direction shown in following table.

REQUIRED TOOL	
Cut a 22 mm (7/8 in) opened wrench to 100 mm (4 in) of length	

ACCESS FROM ENGINE COMPARTMENT	
WATERCRAFT BEHAVIOR	WHAT TO DO
Pulls on left side	Turn steering cable adjustment nut as shown 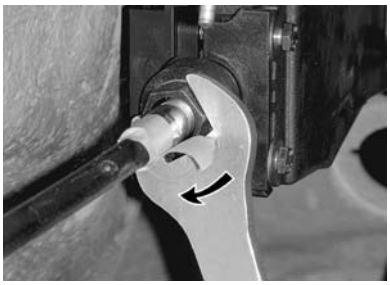
Pulls on right side	Turn steering cable adjustment nut as shown 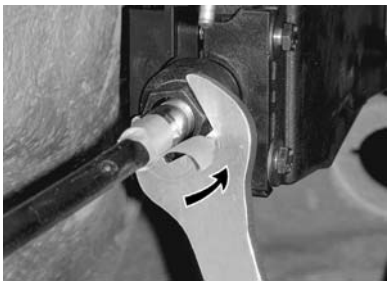

3. Tighten steering cable clamp bolts to specification.

TIGHTENING TORQUE	
Steering cable adjustment nut	6 N•m (53 lbf•**in**)

4. Test watercraft.
5. Readjust adjustment nut as necessary.

Models with Suspension

Set suspension to its maximum UP position or safely lift.

Work from front storage compartment to reach adjustment nut.

1. Loosen steering cable clamp bolts. Do NOT remove bolts.

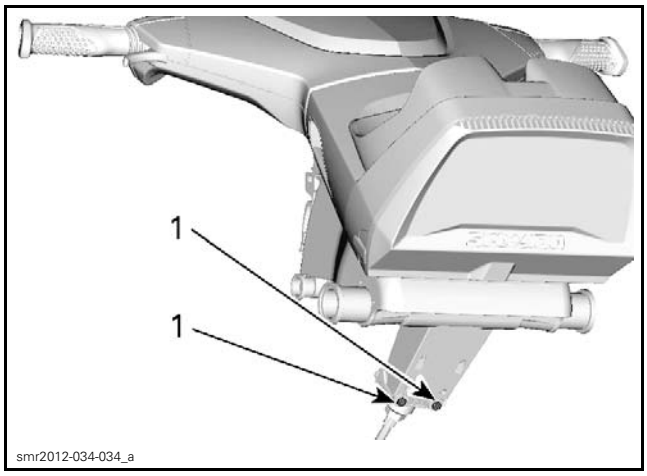

ACCESS FROM FRONT STORAGE COMPARTMENT
1. Loosen bolts

2. Turn adjustment nut 1 turn at a time in the direction shown in following table.

REQUIRED TOOL	
Cut a 22 mm (7/8 in) opened wrench to 100 mm (4 in) of length	

ACCESS FROM FRONT STORAGE COMPARTMENT	
WATERCRAFT BEHAVIOR	WHAT TO DO
Pulls on left side	Turn steering cable adjustment nut as shown 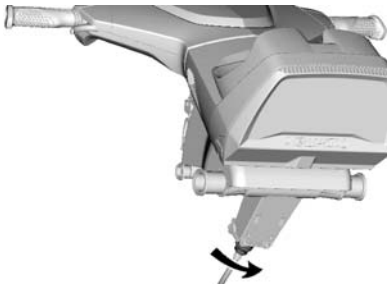
Pulls on right side	Turn steering cable adjustment nut as shown 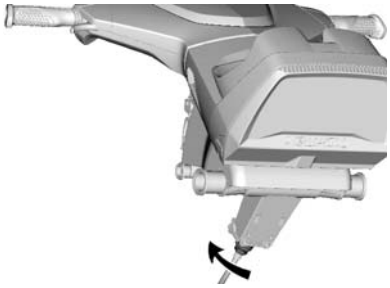

3. Tighten steering cable clamp bolts to specification.

TIGHTENING TORQUE	
Steering cable adjustment nut	6 N•m (53 lbf•**in**)

4. Test watercraft.
5. Readjust adjustment nut as necessary.

ADJUSTABLE ERGONOMIC STEERING (AES)

Models with AES Steering

The handlebar may be adjusted to driver preference by extending and rotating the handlebar extension tubes.

To adjust, carry out the following steps:

1. Loosen the screws (2 each side) that secure the handlebar extension tubes.

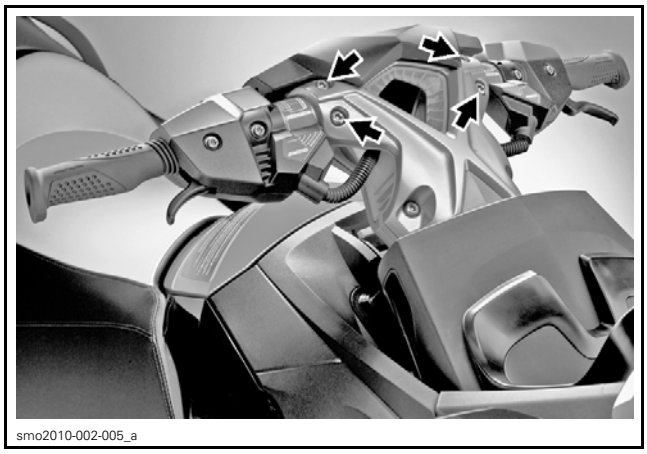
smo2010-002-005_a

EXTENSION TUBE RETAINING SCREWS (4)

2. Pull out or push in the handlebar grips to adjust handlebar width.

NOTE: The handlebar width factory set position is fully closed. The handlebar width may be increased by 2.5 cm (1 in) each side.

3. Rotate the handlebar grips to the desired position of the controls.

NOTE: Rotating the handlebar grips rotates the handlebar extension tubes and controls. The extension tubes may be rotated plus or minus 18° from the factory set position.

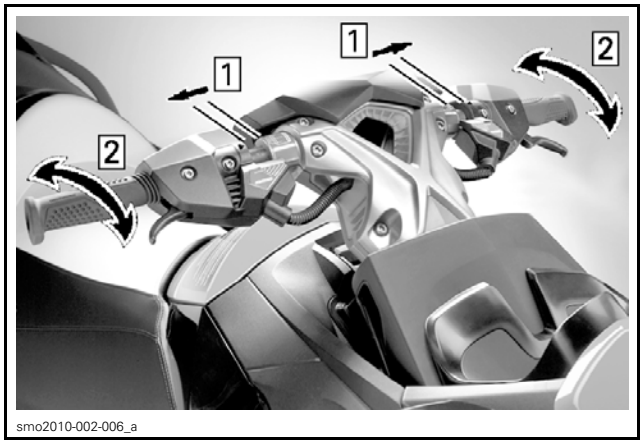

smo2010-002-006_a

ERGONOMIC ADJUSTMENTS
Step 1: Adjust handlebar width
Step 2: Adjust angular position of controls

4. Using the index marks and scales on each side of the handlebar, ensure identical width and angular position of both handlebar extension tubes.

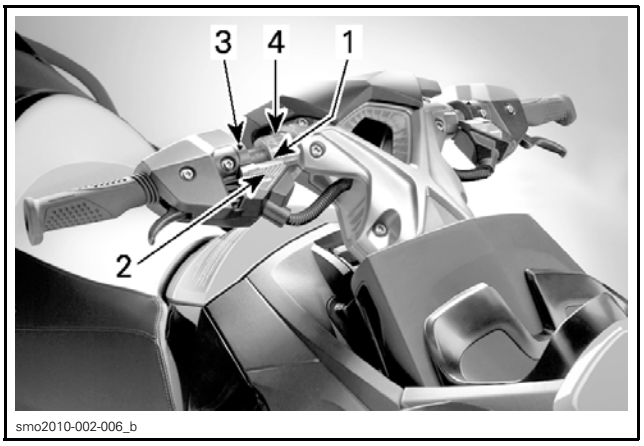

smo2010-002-006_b

1. *Width index*
2. *Width scale*
3. *Angular position index*
4. *Angular position scale*

TIGHTENING TORQUE	
Handlebar retaining screws	22 N•m (16 lbf•ft)

INSPECTION

O.T.A.S. OPERATION

This test is to be performed with the watercraft in the water (test tank or on a trailer).

NOTICE **If the test is performed on a trailer, ensure no debris or rocks can damage the jet pump.**

Start engine.

Raise engine speed higher than 4000 RPM for more than 1 second.

Release throttle while steering is in the straight ahead position.

Within 1 to 3 seconds, turn handlebar all the way to one side.

The O.T.A.S. should come on by keeping or increasing engine speed to approximately 3000 RPM.

Then, engine speed will gradually decrease to idle speed within approximately 5 seconds.

Repeat test for the other side.

If the engine does not behave as described, carry out the *TESTING THE O.T.A.S. SWITCH WITH B.U.D.S.*

TROUBLESHOOTING

DIAGNOSTIC TIPS

Check fault codes as a first troubleshooting step.

If O.T.A.S. works when handlebar is turned on one side only, check:

– Magnets condition
– If magnets and switch are securely installed.

To confirm is O.T.A.S. is functional, carry out *O.T.A.S. OPERATION* in this subsection. If it is not possible, carry out *TESTING THE O.T.A.S. SWITCH WITH B.U.D.S.*

PROCEDURES

HANDLEBAR GRIP

Removing the Handlebar Grip

To remove handlebar grip, remove the cap, then the retaining screw.

Pull out handlebar grip and remove grip insert from handlebar.

NOTE: Verify grip insert for damage.

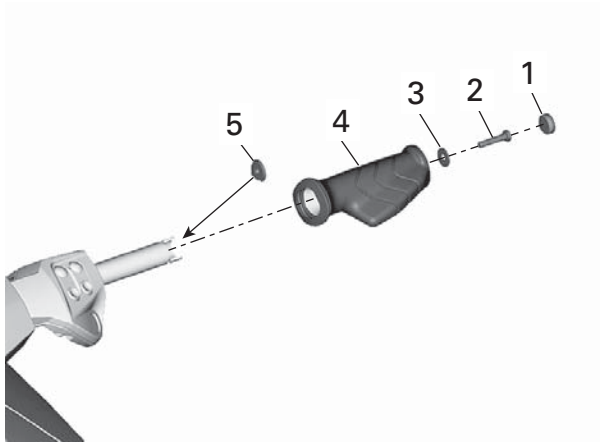

smr2016-035-001_a

1. *Handlebar grip cap*
2. *Handlebar grip screw*
3. *Flat washer*
4. *Handlebar grip*
5. *Handlebar grip insert*

Installing the Handlebar Grip

When installing the grip insert in the handlebar, ensure that it is properly inserted in the slot at the end of the handlebar tubing.

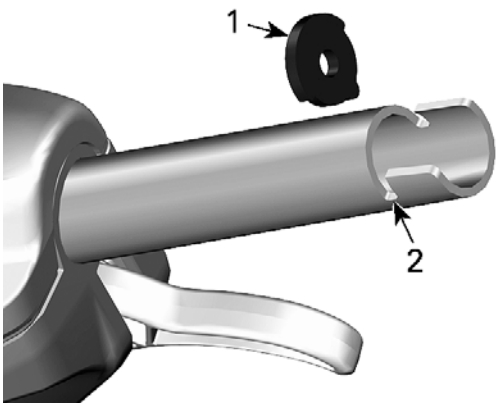

smr2016-035-003_a

TYPICAL
1. *Grip insert*
2. *Handlebar slot*

Install handlebar grip on handlebar matching it to the notch in the handlebar.

Apply LOCTITE 243 (BLUE) (P/N 293 800 060) on screw threads (or use new self-locking screws).

Install flat washer and handlebar grip screw.

NOTICE **Ensure to install flat washer otherwise screw will damage the grip end.**

Torque handlebar grip screw to specification.

TIGHTENING TORQUE	
Handlebar grip screw	7 N•m (62 lbf•**in**)

Install cap.

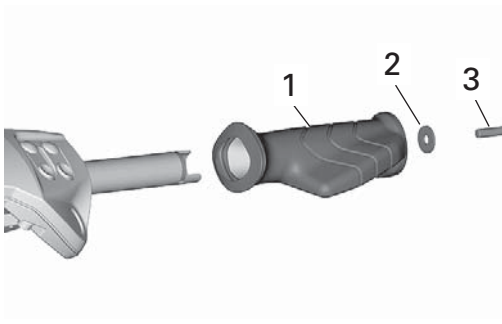

smr2016-035-002_a

TYPICAL
1. *Grip*
2. *Flat washer*
3. *Screw*
4. *Cap*

HANDLEBAR SWITCH COVER (LH OR RH)

Removing the Handlebar Switch Cover (LH or RH)

Models without AES Steering

1. Insert the end of a small screwdriver in one of cover slots.

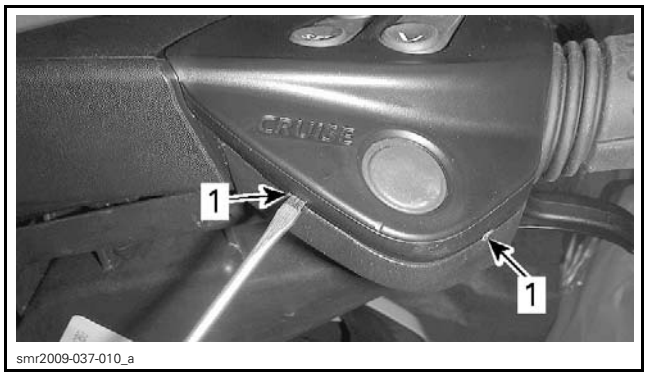

RH SIDE SHOWN
1. Cover slots

2. Twist screwdriver to open cover.
3. Remove the switch cover.

Models with AES Steering

1. Remove the 2 screws at front of the upper handlebar housing.

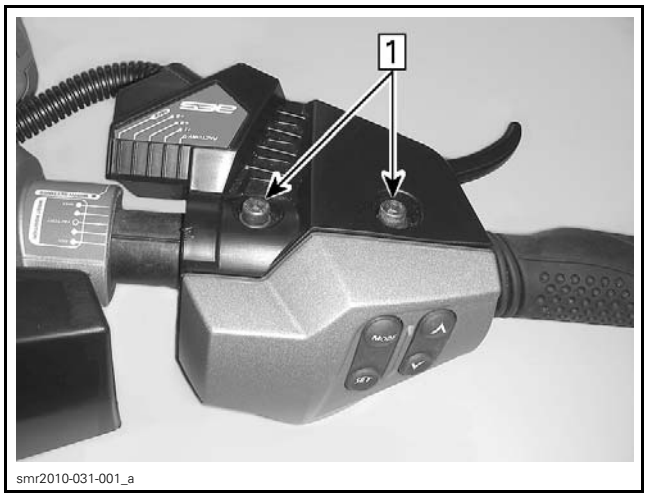

Step 1: Remove these two screws

2. Remove the screw at rear of the handlebar.

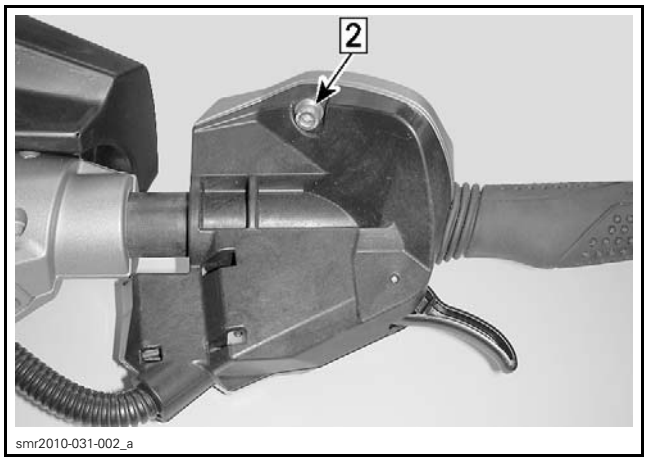

Step 2: Remove this screw

NOTICE **Do not try to pull the cover off the housing at this time.**

3. Hold the housing cover to prevent it from falling off the handlebar when unlocking the upper housing in the following step.
4. Using a small screwdriver, unlock the tab retaining the upper housing and pull the upper housing off.

NOTICE **As you remove the upper housing, hold the housing cover to prevent it from falling off the handlebar.**

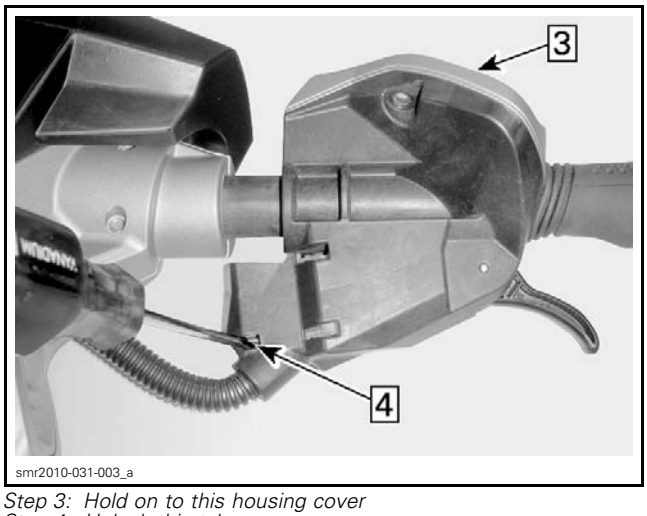

Step 3: Hold on to this housing cover
Step 4: Unlock this tab

5. Remove the housing cover from the handlebar.

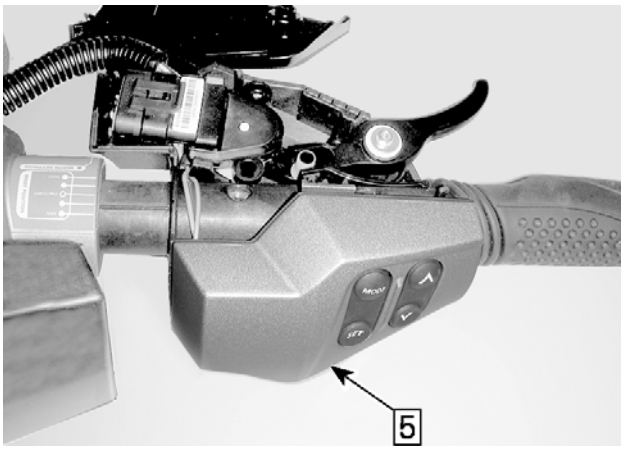

smr2010-031-004_a

Step 5: Remove housing cover

Installing the Handlebar Switch Cover (LH or RH)

Models without AES Steering

1. Install the round rubber button in the cover.
2. Insert the front tab and tilt the cover over the switches (applicable models).

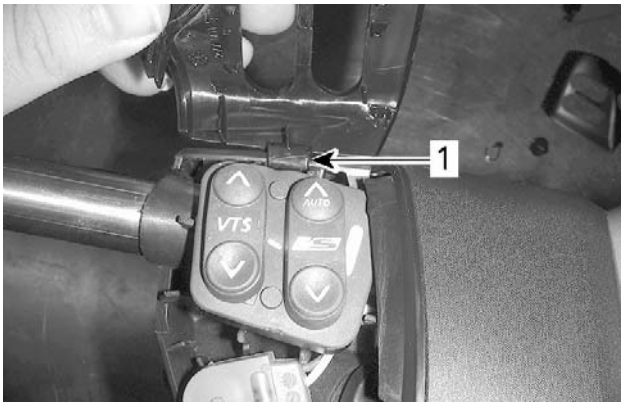

smr2009-037-012_a

TYPICAL — RH SIDE SHOWN
1. Front tab

3. Press on the cover to lock it.

Models without AES Steering

Installation is the reverse of the removal procedure however, pay attention to the following.

1. Route wires to avoid pinching them.
2. Position the housing cover onto the handlebar housing.
3. Ensure positioning of corrugated conduit

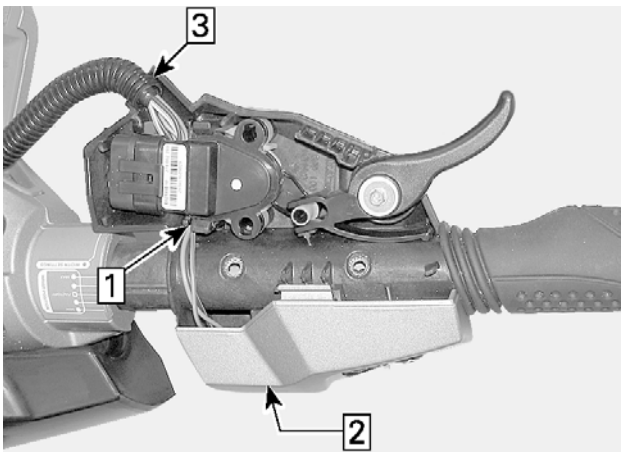

smr2010-031-009_b

Step 1: Ensure wiring is properly routed
Step 2: Install housing cover
Step 3: Ensure proper corrugated conduit positioning

4. Position the upper housing on the handlebar housing.
5. Ensure proper engagement of the upper housing and cover tabs.

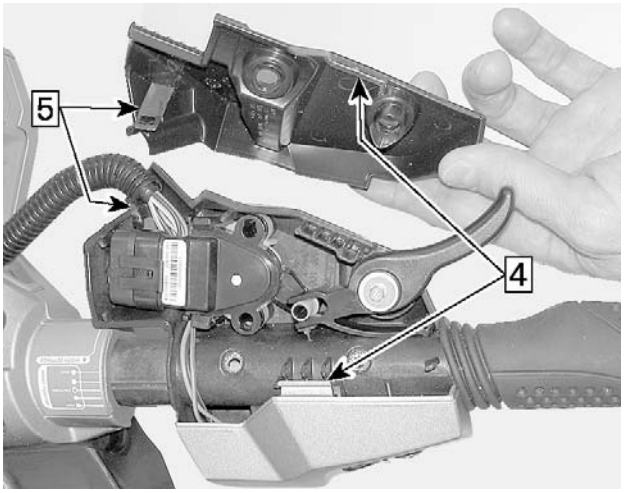

smr2010-031-010_b

Step 4: Ensure engagement of housing cover retaining tabs
Step 5: Ensure engagement of upper housing locking tabs

6. Install the three retaining screws for the upper housing and torque them to specification.

TIGHTENING TORQUE	
Upper housing screws	2 N•m (18 lbf•**in**)

7. Ensure proper operation of throttle lever.

EXTENSION BLOCKS (AES STEERING)

Extension Block Removal

1. Remove all socket screws (8x) that retain the front and the rear extension blocks.

2. Separate both extension blocks.
3. Remove the engine cut-off switch (D.E.S.S. post) retaining nut. Refer to *IGNITION SYSTEM.*

Extension Block Installation

Tighten screws to specification as per illustrated sequence.

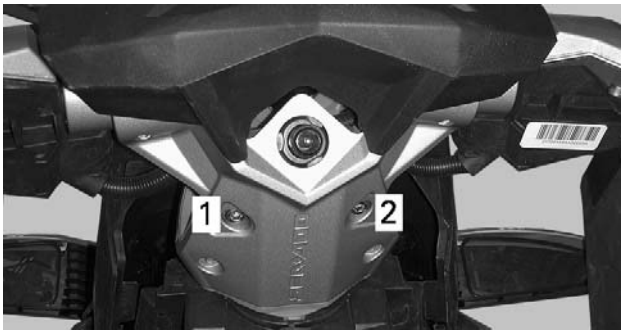

sbg2010-002-002_b

REAR STEERING EXTENSION BLOCK

TIGHTENING TORQUE	
Rear steering extension block screws	33 N•m (24 lbf•ft)

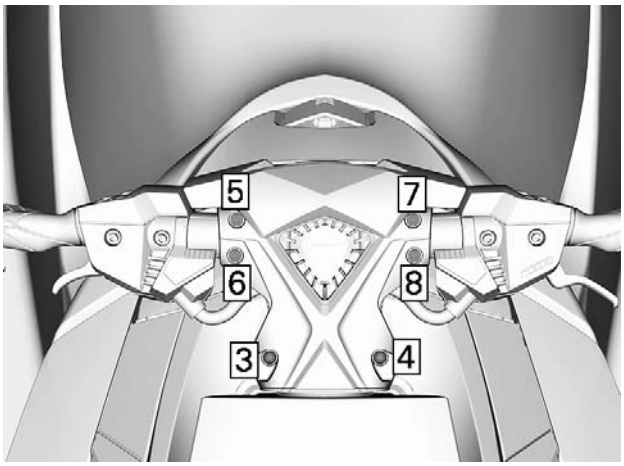

smr2016-035-006_a

FRONT STEERING EXTENSION BLOCK

TIGHTENING TORQUE		
Steps 3 and 4	Torx screw	33 N•m (24 lbf•ft) + LOCTITE 243 (BLUE) (P/N 293 800 060) or install new self-locking screws)
Step 5 to 8	Allen socket screws	22 N•m (16 lbf•ft)

Install engine cut-off switch (D.E.S.S. post) retaining nut. Refer to *IGNITION SYSTEM.*

STEERING COVER

Removing the Steering Cover

Models without AES Steering

1. Remove the engine cut-off switch (D.E.S.S. post) retaining nut. Refer to *IGNITION SYSTEM.*
2. Remove both handlebar switch covers. See procedure in this subsection.
3. Unlock steering cover from steering.
   3.1 Insert a small tool, such as an Allen key, into a steering cover hole. Press the tool against the retaining tab to unlock it. Repeat for the other side.

   NOTICE **The tool must be inserted perfectly straight to avoid breaking the tab holder.**

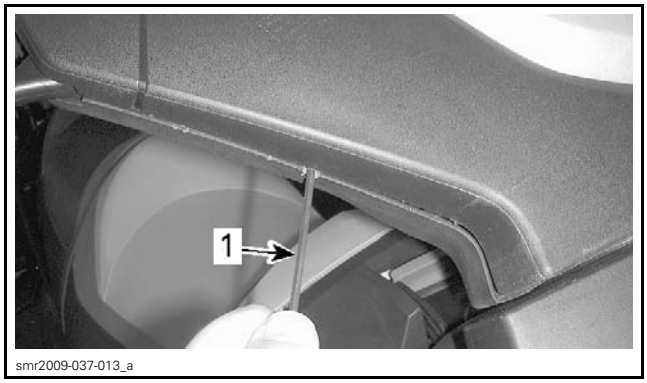

smr2009-037-013_a

1. Allen key

   3.2 In both cavities at the back of steering cover, release both inner retaining tabs using a long screwdriver.

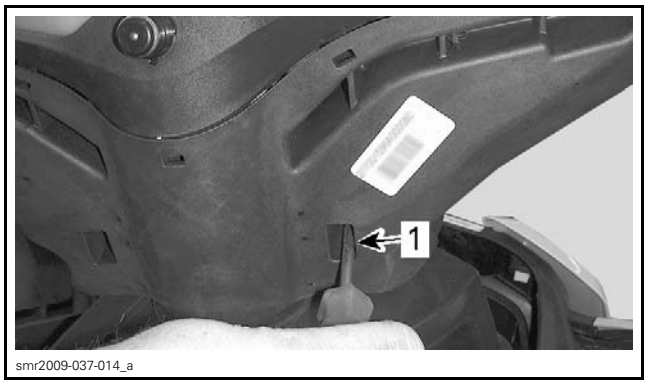

smr2009-037-014_a

1. Rear cavity

   3.3 Release the five retaining tabs at the rear of steering cover.

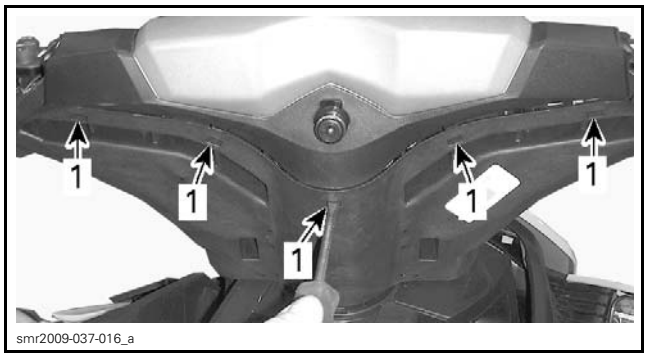

1. Retaining tabs

3.4 Remove the foam inside the steering cover.

3.5 Remove the engine cut-off switch from the steering cover.

RXT-X/RXP-X Series

1. Separate the extension blocks. See procedure in this subsection.
2. Remove screws securing the steering cover (underneath steering cover) to the front extension block.

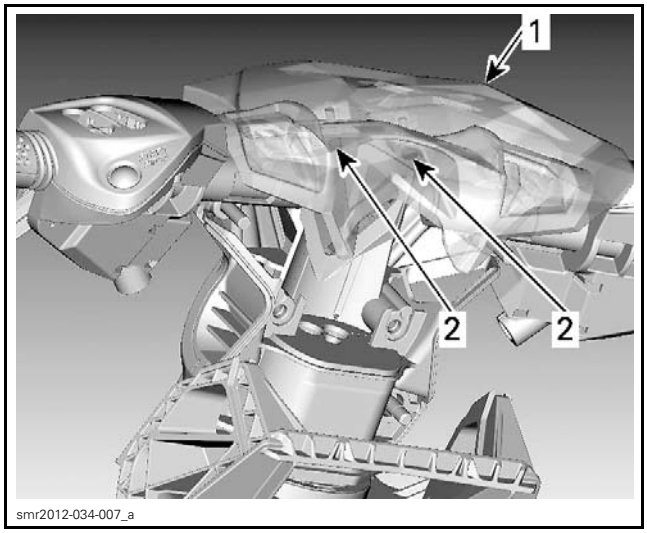

1. Steering cover
2. Retaining screws

Installing the Steering Cover

All Models Except RXT-X/RXP-X Series

1. Install the engine cut-off switch.

1.1 Index the alignment pin of the engine cut-off switch with the notch of steering cover.

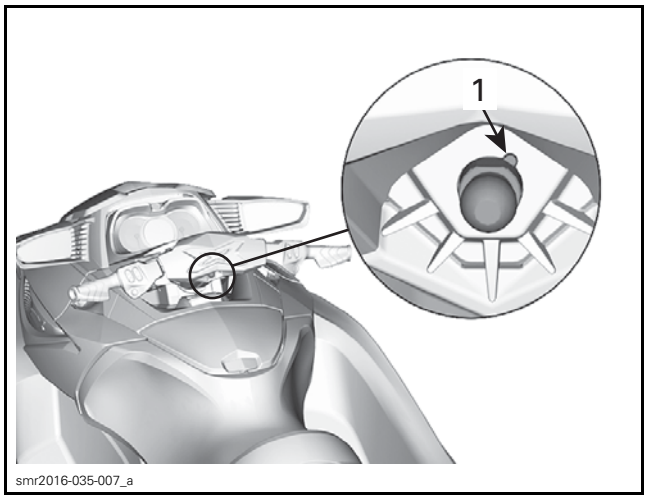

1. Steering cover notch

1.2 Press the engine cut-off switch until retaining tab is positioned correctly.

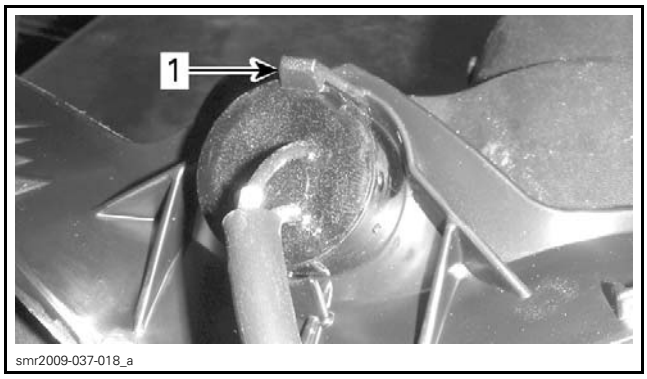

1. Retaining tab

2. Install the engine cut-off switch nut.

TIGHTENING TORQUE	
Engine cut-off switch nut	2 N•m (18 lbf•**in**)

3. Install the foam.
4. Place the engine cut-off switch harness in foam slot.
5. Install the steering cover.

5.1 Check if all harnesses are route properly. All harness must be inserted in its slot.

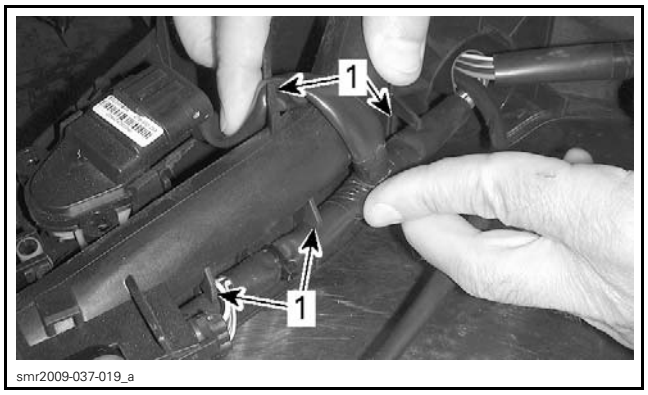

1. *Harness slots*

5.2 Clip the top of the cover.

5.3 Stretch the bottom of the steering cover until the cover edge passes over the inner ribs.

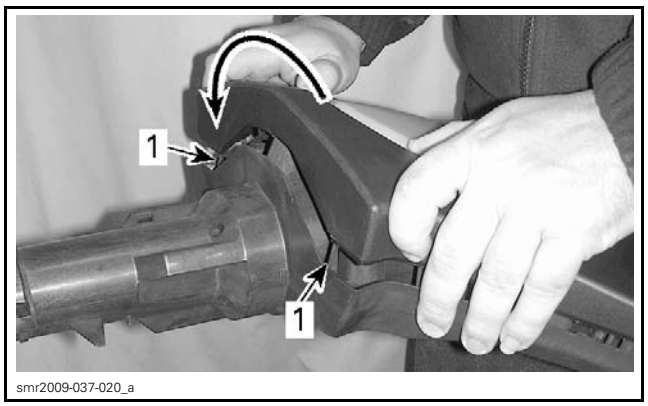

STEERING REMOVED FOR CLARITY PURPOSE
1. *Inner ribs*

5.4 Push both side of the cover to lock it with the steering column.

5.5 Install switch covers.

RXT-X/RXP-X Series

The installation is the reverse of the removal procedure.

THROTTLE AND iBR LEVERS

NOTE: The following procedure demonstrates the replacement of the throttle lever but the same procedure will be used for the iBR lever.

Replacing the Lever

1. Remove *HANDLEBAR SWITCH COVER*, see procedure in this subsection.
2. Remove the screw and washer securing throttle lever.
3. Remove throttle lever and its bushings.

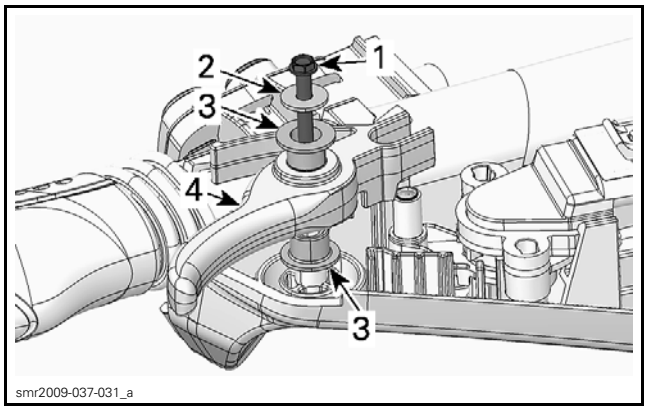

1. *Retaining screw*
2. *Washer*
3. *Bushings*
4. *Throttle lever*

4. Clean throttle lever area from dust or any deposits.
5. Apply XPS SYNTHETIC GREASE (P/N 293 550 010) on bushings and on the outer surface of the return tab.

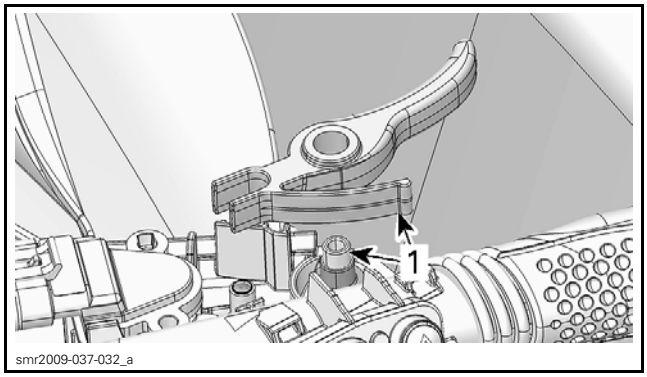

1. *Apply grease here*

6. Install the lever.
   6.1 Install both bushings in lever hole.
   6.2 Insert sensor lever end into throttle lever fork.
   6.3 Position the return tab against the handlebar.
   6.4 Secure the lever with washer and screw.

TIGHTENING TORQUE	
Lever screw	0.7 N•m (6 lbf•**in**)

7. Reinstall all removed parts using appropriate procedures.

STEERING CABLE

Replacing the Steering Cable

RXP-X Series

Remove seat.

Open the front storage compartment cover.

Remove access cover.

Remove the gauge trim. Refer to *BODY (RXP-X SERIES* subsection.

RXT/GTX without Suspension

Open the seat and the front storage compartment cover.

Remove the storage basket.

Remove the gauge support. Refer to *INFORMATION CENTER (GAUGE)* subsection.

RXT/GTX with Suspension

Remove the moving deck. Refer to *BODY (GTX, RXT AND WAKE PRO SERIES)* subsection.

Remove the adjusting nut from steering cable end.

All Models

1. Detach steering cable from steering column.
   1.1 Remove the bolt securing the ball joint to the steering column arm.

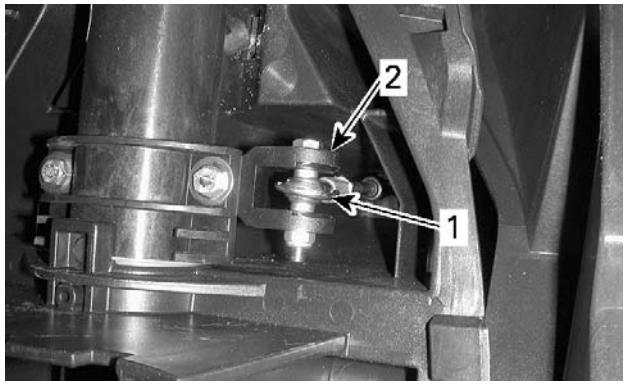

smr2009-042-006_a

1. Steering cable ball joint
2. Steering column arm

   1.2 Remove the steering cable clamp bolts.
   1.3 Unhook steering cable clamp.

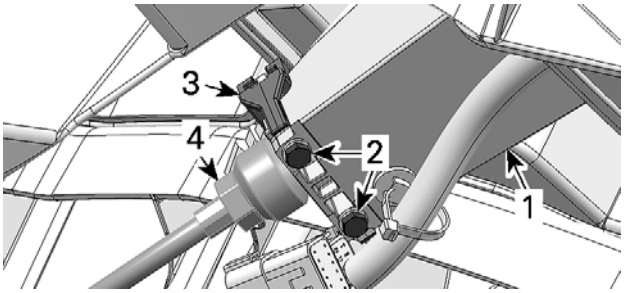

smr2009-042-007_a

TYPICAL
1. Steering column
2. Steering column clamp bolts
3. Steering column clamp
4. Steering cable adjusting nut

   1.4 Place steering in its lower position (models with tilt steering).
   1.5 Free steering cable from the clamp.
2. At rear of the watercraft, disconnect ball joint from jet pump nozzle arm.

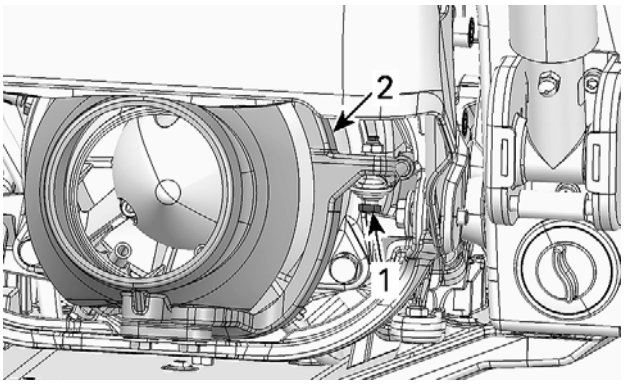

smr2009-037-004_a

1. Steering cable bolt
2. Nozzle arm

3. Remove ball joit and jam nut from cable.

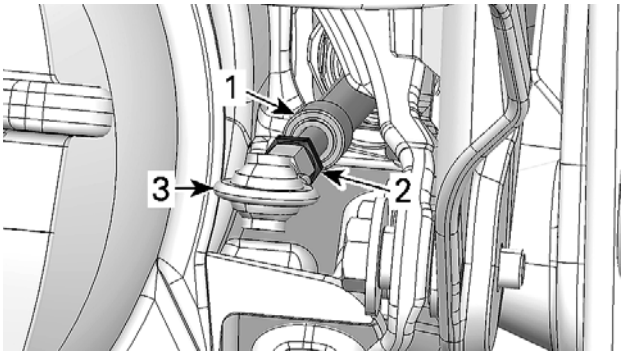

smr2009-037-021_a

1. Steering cable
2. Jam nut
3. Ball joint

4. Loosen steering cable nut.

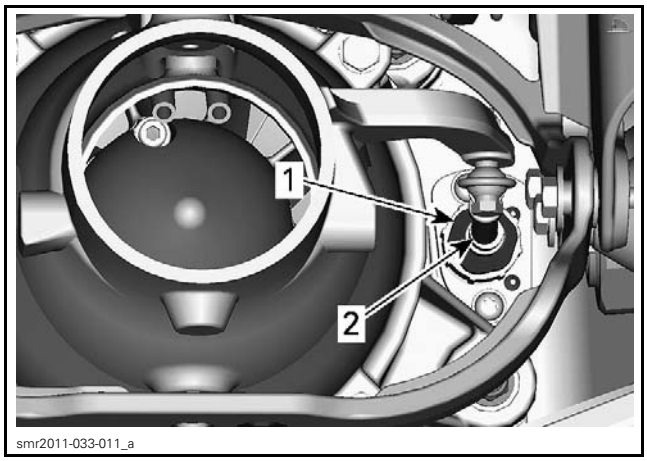

1. *Steering cable nut*
2. *Steering cable*

REQUIRED TOOL	
STEERING CABLE TOOL (P/N 295 000 145)	

5. Remove steering cable nut, half rings and O-ring.

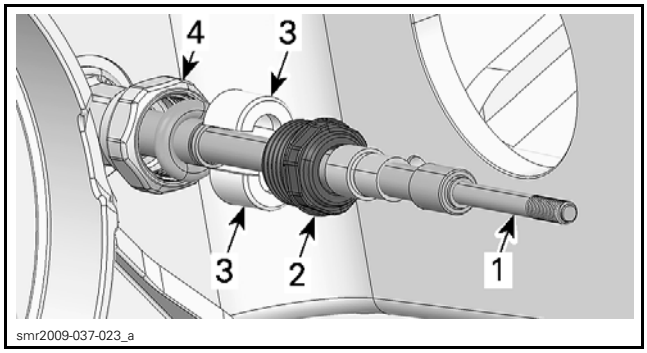

TYPICAL - PUMP AND iBR SYSTEM REMOVED FOR CLARITY PURPOSE ONLY
1. *Steering cable*
2. *Steering cable nut*
3. *Half rings*
4. *O-ring*

6. Remove the adjusting nut from the new steering cable.
7. From inside the hull, pull the aft end of the cable through the hull fitting.
8. Using a piece of hose, attach one end of the new cable to the opposite end of the old cable together.
9. Route the new cable in the hull by slowly pulling the old one, then separate cable ends.
10. From inside of the hull, pass the aft end of the cable through the hull fitting.
11. Secure the steering cable to the hull fitting.
    - 11.1 Install O-ring and half rings.
    - 11.2 Apply LOCTITE 567 (PIPE SEALANT) (P/N 293 800 013) on nut threads.
    - 11.3 Secure steering cable with the steering cable nut.

TIGHTENING TORQUE	
Steering cable nut	6 N•m (53 lbf•**in**)

12. Install the ball joint on the end of the steering cable.
    - 12.1 The threaded portion of steering cable inserted into ball joint should be within 9 mm ± 1 mm (.354 in ± .039 in).

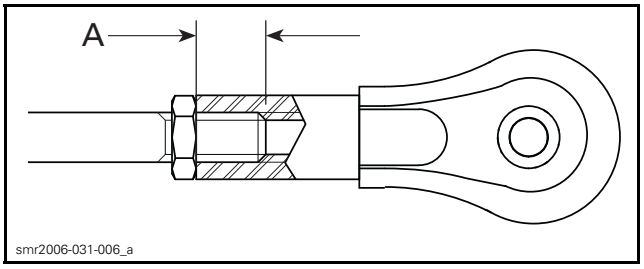

A. 9 mm ± 1 mm (.354 in ± .039 in)

    - 12.2 Tighten jam nut to specification.
    - 12.3 Position the steering cable ball joint to the nozzle as per following illustration.

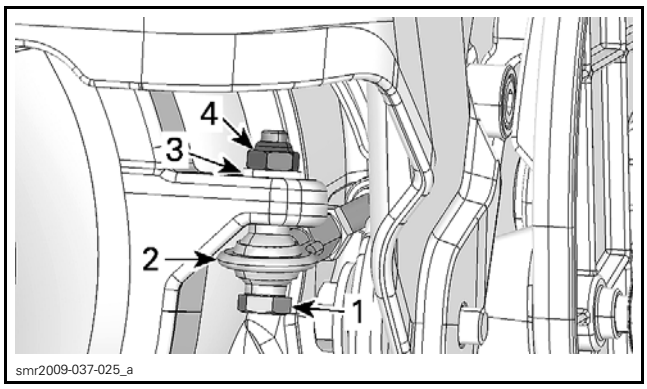

TYPICAL
1. *Ball joint bolt*
2. *Ball joint under nozzle arm*
3. *Washer*
4. *Nut*

    - 12.4 Tighten ball joint nut to specification.

TIGHTENING TORQUE	
Ball joint jam nut	2.5 N•m (22 lbf•**in**)
Ball joint nut	7 N•m (62 lbf•**in**)

RXT/GTX with Suspension

1. Check if the cable bellow is properly positioned all around steering cable.

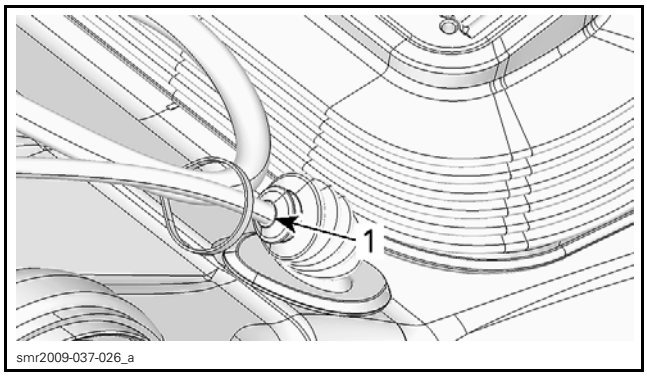

1. Check fit

2. Reinstall the moving deck. Refer to *BODY (GTX, RXT AND WAKE PRO SERIES)* subsection for complete procedure.

All Models

1. Carry out *ADJUSTING THE ALIGNMENT OF THE STEERING*. See procedure in this subsection.
2. Insert the steering cable through the bottom end of the steering column.
3. Install steering cable clamp and its bolts. Do not tighten bolts yet.

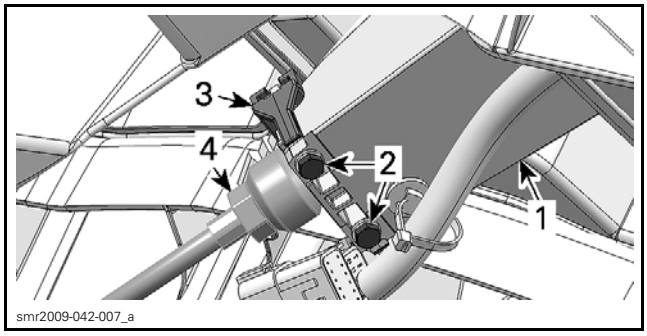

1. Steering column
2. Steering column clamp bolts
3. Steering column clamp
4. Steering cable adjusting nut

4. Attach steering cable to steering column arm.

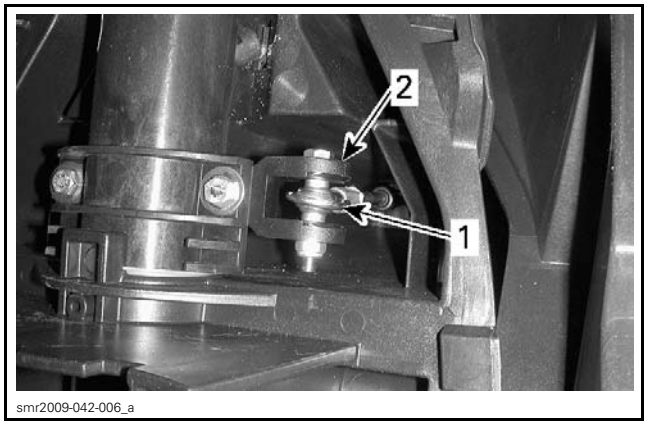

1. Steering cable ball joint
2. Steering column arm

TIGHTENING TORQUE	
Front steering cable screw	5 N•m (44 lbf•**in**)

5. Install other removed parts.

Adjusting the Steering Cable

1. Steering cable adjustment is required only if:
   – A steering cable end ball joint has been replaced or loosened/tightened.
   – Steering cable adjustment nut has been loosened/tightened.
   – Steering cable has been replaced.
   – Steering column or support has been replaced.
2. Raise the iBR gate by activating the iBR override function. Refer to *iBR AND VTS* subsection.
3. Refer to *STEERING CABLE* in this subsection and:
   – Detach steering cable end from steering column.
   – Unhook steering cable from retaining clamp of steering column support.
4. Position jet pump nozzle as follows:
   4.1 Place a straight edge on the nozzle end.
   4.2 Measure the distance from the transom each side of the straight edge.

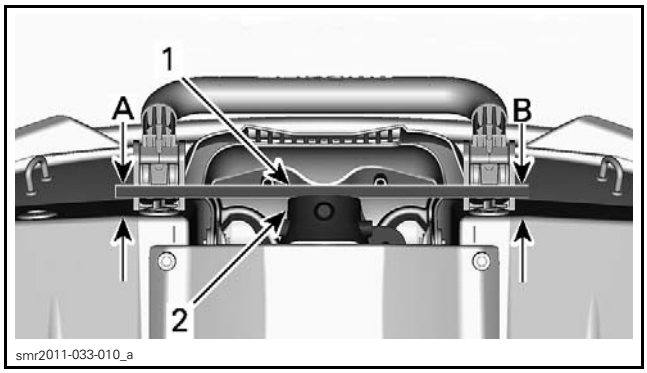

VIEW FROM UNDERNEATH THE HULL
1. Straight edge
2. Nozzle
A. LH side measure
B. RH side measure

   4.3 Turn nozzle so that measures A and B are equal.
5. Adjust steering cable as follows:
   5.1 Turn adjustment nut to reach specification.

STEERING ADJUSTMENT SPECIFICATION
187.7 mm (7.39 in)
NOTE: This specification gives the proper nozzle adjustment to offset the jet pump thrust.

NOTE: Be careful not to move inner rod as it would alter nozzle position.

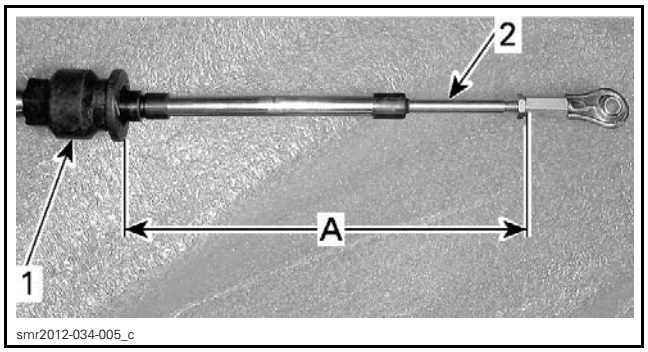

1. Adjustment nut
2. Do NOT move inner rod
A. 187.7 mm (7.39 in)

5.2 Recheck nozzle position. If it moved, reposition it and readjust cable nut.

5.3 Reinstall steering cable. Pay attention not to turn the adjustment nut as it would alter adjustment.

NOTE: Tape can be used over adjustment nut to prevent altering adjustment.

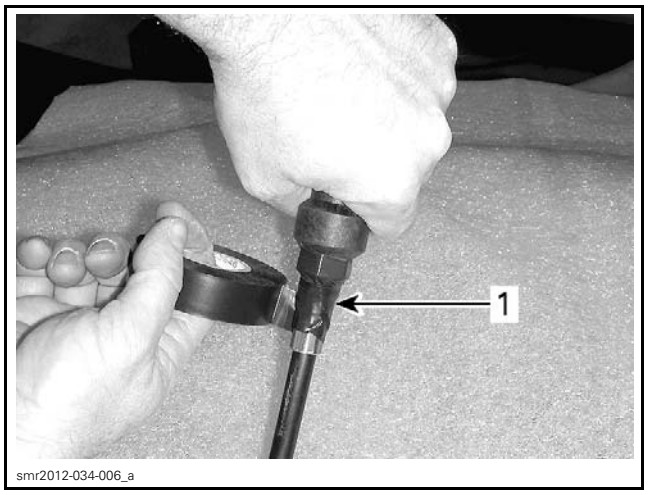

1. Tape adjustment nut to cable housing to prevent altering adjustment

5.4 Tighten steering cable clamp bolts to specification.

TIGHTENING TORQUE
6 N•m (53 lbf•**in**)

NOTE: When handlebar is in straight position and steering cable is installed, steering nozzle may not be parallel to transom. This is to offset jet pump thrust.

6. Test ride watercraft.

6.1 If watercraft pull on one side, carry out *STEERING ALIGNMENT* in this subsection.

STEERING COLUMN

Removing the Steering Column

RXP-X Series

Open the front storage cover.

Remove the access cover.

Remove gauge trim, refer to *BODY (RXP-X SERIES* subsection.

All Other Models

Open the front storage cover and remove the storage basket.

Remove the gauge support. Refer to *INFORMATION CENTER (GAUGE)* subsection.

All Models

1. Disconnect both connectors under the steering column.

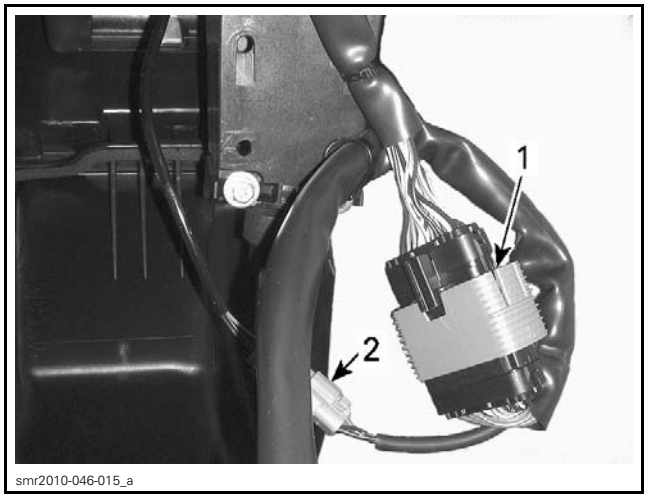

1. Steering connector
2. O.T.A.S. connector

2. Remove both screws securing the steering column.

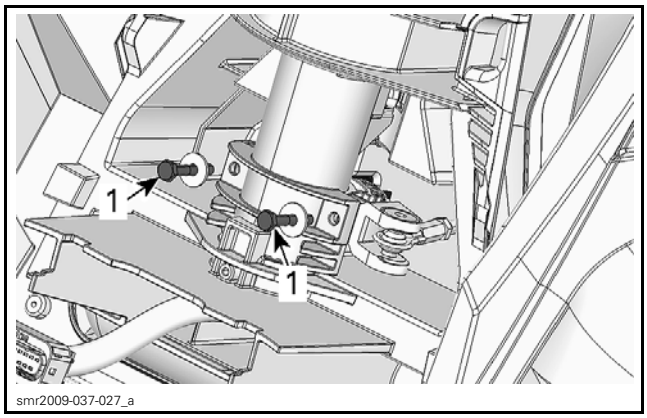

1. Steering column screws

3. Pull steering column out of its support. Ensure to not damage wiring harness connectors and O.T.A.S. magnets.

Inspecting the Steering Column

Check steering column for:

– Cracks
– Stress marks
– Sings of wear.

Check steering column support bushings.

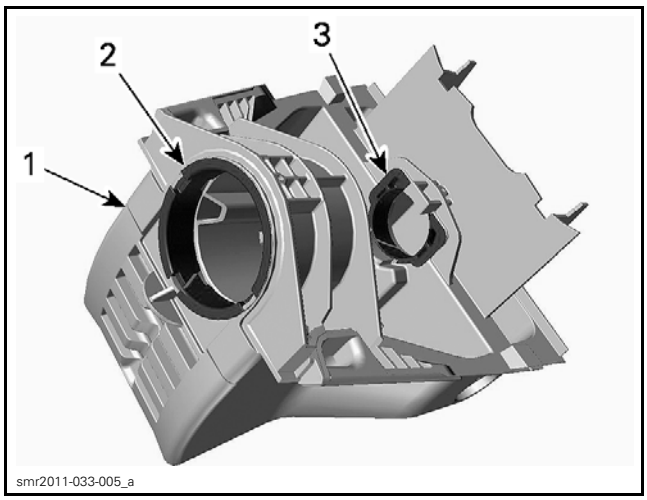

MODELS WITH TILT STEERING
1. Steering column support
2. Upper bushing
3. Lower bushing

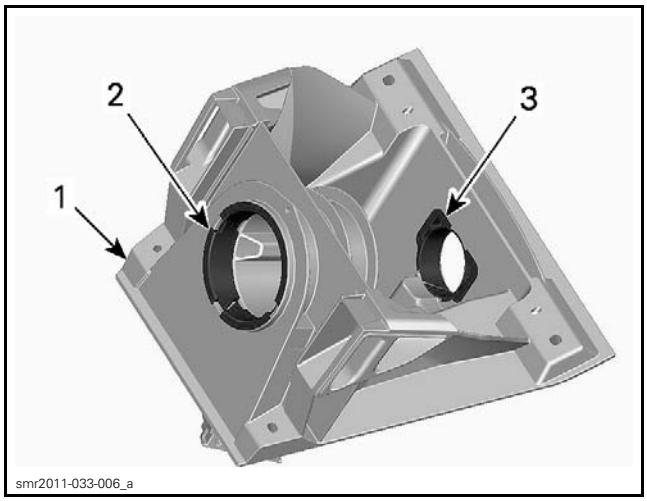

MODELS WITHOUT TILT STEERING
1. Steering column support
2. Upper bushing
3. Lower bushing

Check wear sleeve behind the steering column arm.

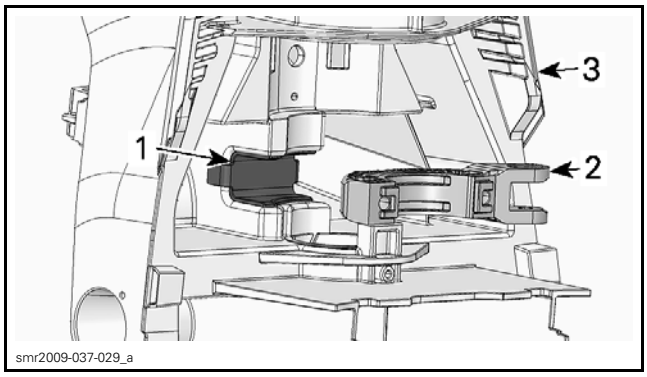

1. Wear sleeve
2. Steering column arm
3. Steering column support

Replace any damaged or worn parts.

Installing the Steering Column

The installation is essentially the reverse of the removal procedure. However, pay attention to the following.

Carefully, drive steering column through steering column support. Ensure not to hit the O.T.A.S. magnet during steering column installation.

Tighten steering column screws to specifications.

TIGHTENING TORQUE	
Steering column screws	6 N•m (53 lbf•**in**)

Reinstall all removed parts using appropriate procedure.

STEERING COLUMN SUPPORT

Removing the Steering Column Support (RXP-X Series)

1. Remove steering column, see procedure in this subsection.
2. Remove console, refer to *BODY (RXP-X SERIES)* subsection.
3. Remove steering column support retaining screws.

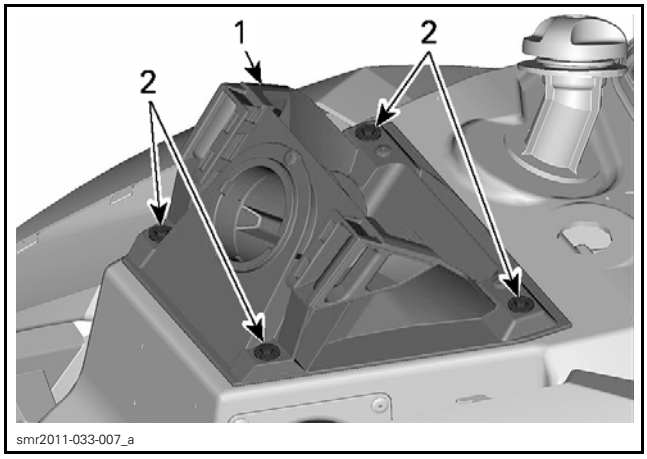

1. Steering column support
2. Retaining screws

Removing the Steering Column Support (GTX, RXT and WAKE PRO Series)

1. Refer to *BODY (GTX, RXT AND WAKE PRO SERIES)* and remove the following parts:
   – Storage compartment cover
   – Front grille **(models with suspension)**
   – Body covers.
2. Remove storage basket.
3. Disconnect both connectors under the steering column.

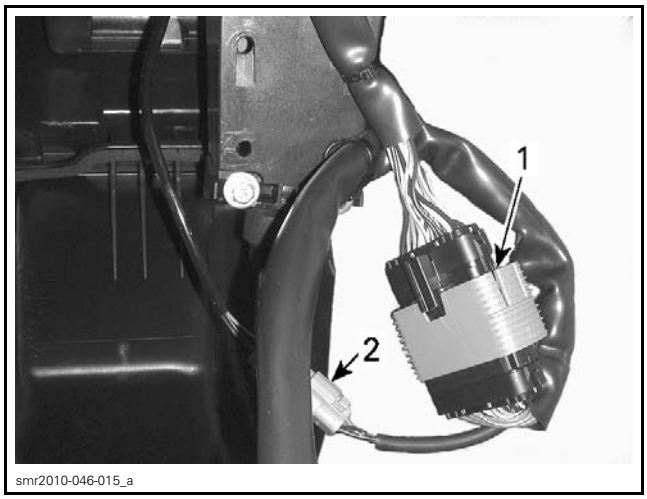

1. Steering connector
2. O.T.A.S. connector

4. Remove the gauge support. Refer to *INFORMATION CENTER (GAUGE)* subsection.
5. On both sides, remove both pivot bushings (steering column support and steering adjustment handle).

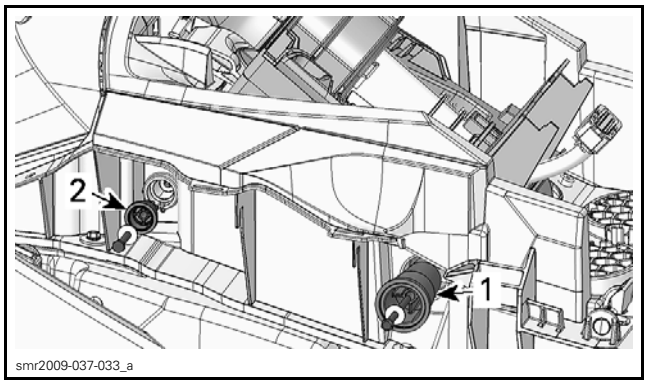

1. Pivot bushing of steering column support
2. Pivot bushing of steering adjustment handle

NOTE: If pivot bushings retaining steering column are hard to remove, remove the retaining screw from the center hole and tighten it into the offset hole. Tighten screw until the pivot bushing comes out of steering column support.

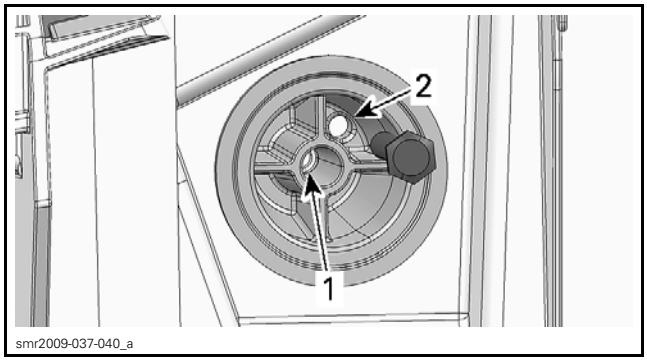

1. Center hole
2. Offset hole

6. Remove steering column support and steering adjustment handle from vehicle.
7. Remove *STEERING COLUMN* from its support. See the procedure in this subsection.

Installing the Steering Column Support

Installation is the reverse of the removal procedure.

STEERING TILT RELEASE HANDLE

Replacing the Steering Tilt Release Handle

Use the same procedure as for *STEERING COLUMN SUPPORT*.

O.T.A.S. SWITCH

Testing the O.T.A.S. SwitchUsing B.U.D.S.

Connect watercraft to B.U.D.S. Refer to *COMMUNICATION TOOLS AND B.U.D.S.* subsection.

Select the **Monitoring** and **iBR** tabs.

Briefly press the START/STOP button to wake up the ECM.

Install the tether cord on the engine cut-off switch.

While monitoring the O.T.A.S. indicator in B.U.D.S., completely turn steering in one direction and keep it in this position.

The O.T.A.S. indicator should turn on when handlebar reaches the stopper.

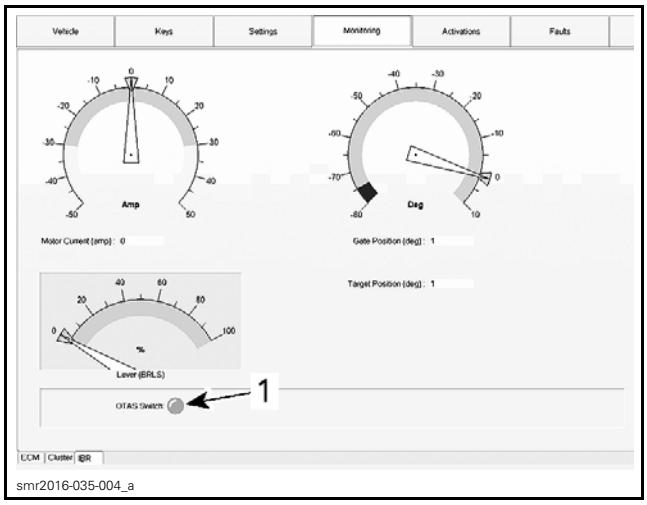

MONITORING AND iBR TABS
1. O.T.A.S. indicator

Repeat test for the other side.

If O.T.A.S. indicator does not turn on, carry out the *TESTING THE O.T.A.S. SWITCH INPUT VOLTAGE*.

Testing the O.T.A.S. Switch Input Voltage

Access the O.T.A.S. connector as follows:

RXP-X Series

Open the front storage cover and remove the access panel.

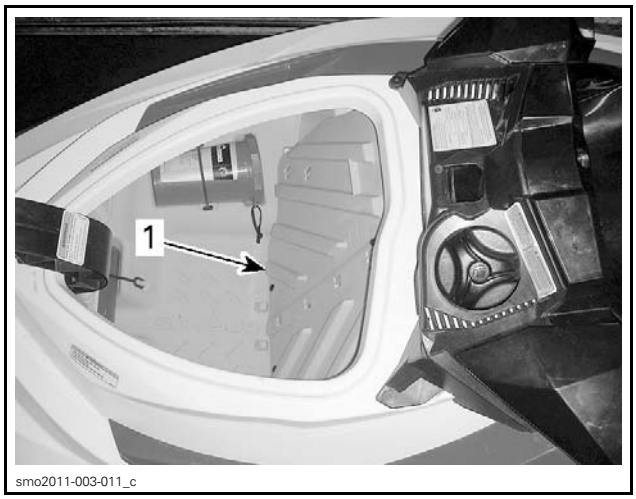

TYPICAL
1. Access panel

GTX/RXT Series and WAKE PRO

Open front storage compartment cover.

Remove front storage bin.

Remove the access panel.

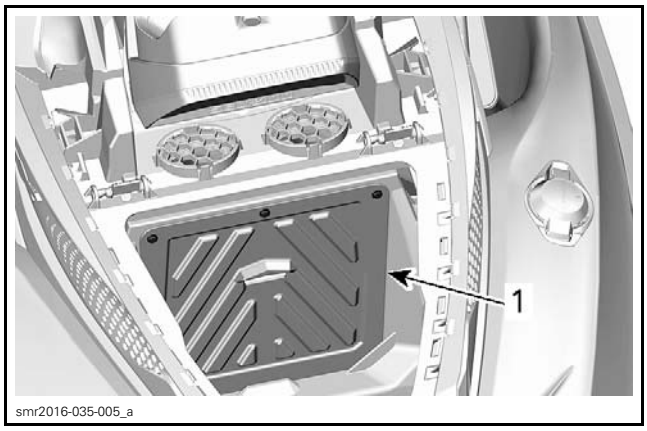

1. Access panel

Disconnect the top of the front air ventilation hoses.

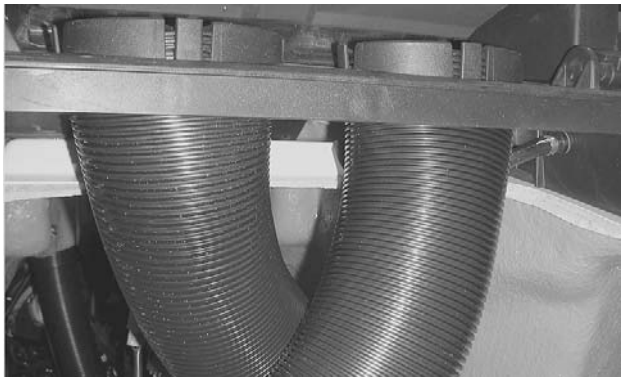

FRONT AIR VENTILATION HOSES

GTX and RXT with Suspension

Open front storage compartment cover.

Remove front storage bin.

For easier access, rise the moving deck using the iS "up" button.

All Models

Disconnect the O.T.A.S. connector (keep the 24-pin steering harness connected.

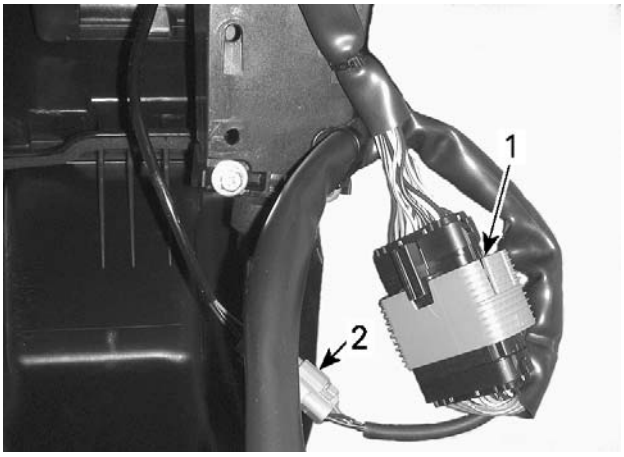

1. *Steering connector*
2. *O.T.A.S. connector*

Connect the DIAGNOSTIC HARNESS (P/N 529 036 188) in-line between the disconnected O.T.A.S. connectors.

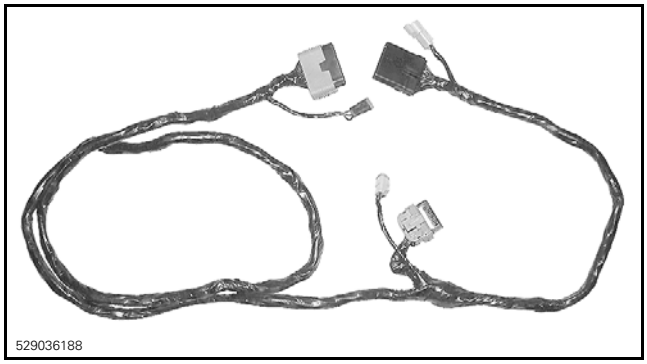

Press the START/STOP button to activate the electrical system.

Using the FLUKE 115 MULTIMETER (P/N 529 035 868), measure voltage as follows.

TEST PROBES		VOLTAGE (VDC)
PIN A (3-pin connector)	Battery negative post	Battery voltage

If voltage is not as specified, check wiring and connectors.

If voltage is as specified, carry out the *TESTING THE O.T.A.S. SWITCH GROUND*.

Testing the O.T.A.S. Switch Ground

Install the DIAGNOSTIC HARNESS (P/N 529 036 188) as described in *TESTING THE O.T.A.S. SWITCH INPUT VOLTAGE*.

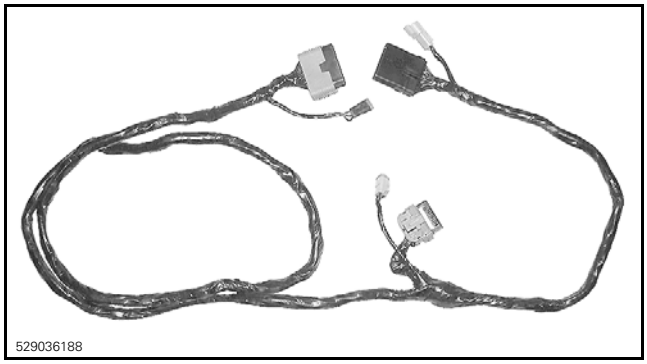

Press the START/STOP button to activate the electrical system.

Using the FLUKE 115 MULTIMETER (P/N 529 035 868), check ground circuit as follows.

TEST PROBES		VOLTAGE (VDC)
PIN A (3-pin connector)	PIN B (3-pin connector)	Battery voltage

If voltage is not as specified, check wiring and connectors.

If voltage is as specified, carry out the *TESTING THE O.T.A.S. SWITCH SIGNAL*.

Testing the O.T.A.S. Switch Signal

Install the DIAGNOSTIC HARNESS (P/N 529 036 188) as described in *TESTING THE O.T.A.S. SWITCH INPUT VOLTAGE*.

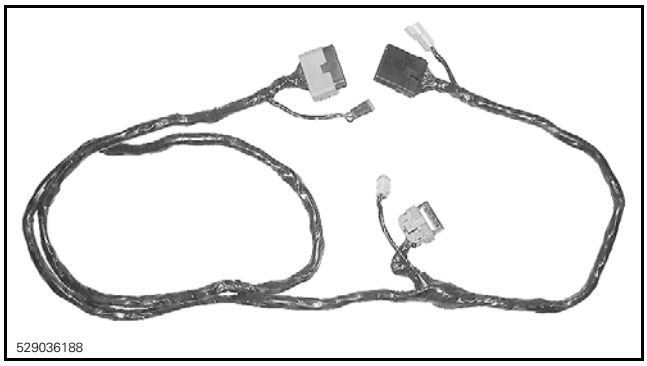

Press the START/STOP button to activate the electrical system.

Using the FLUKE 115 MULTIMETER (P/N 529 035 868), check switch signal as follows.

TEST PROBES		HANDLEBAR POSITION	VOLTAGE
PIN C (3-pin connector)	PIN B (3-pin connector)	Straight ahead	0.6 to 0.8 Vdc
		Turned completely to the right	2.0 to 2.5 Vdc
		Turned completely to the left	

If voltage is not as specified, replace the switch.

NOTE: To avoid useless switch replacement, make sure magnets are in good condition. Also, make sure magnets and switch are securely clipped.

Replacing the O.T.A.S. Switch

Models Without Tilt Steering

Remove steering column, see procedure in this subsection.

Models with Tilt Steering

Remove *STEERING COLUMN SUPPORT*, see procedure in this subsection.

Remove steering column from its support by removing both retaining screws.

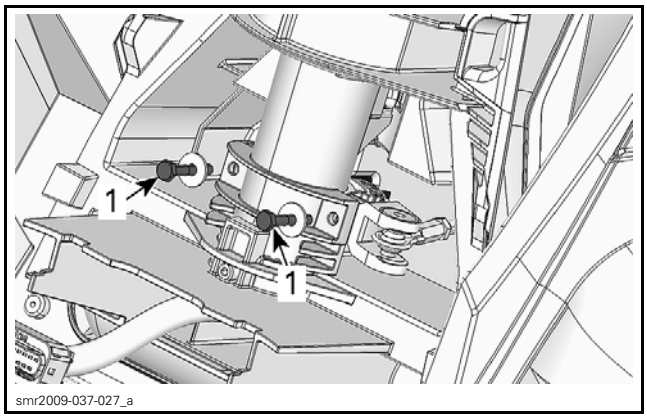

1. Steering column screws

All Models

1. Using a small screwdriver, unhook the switch from steering support.

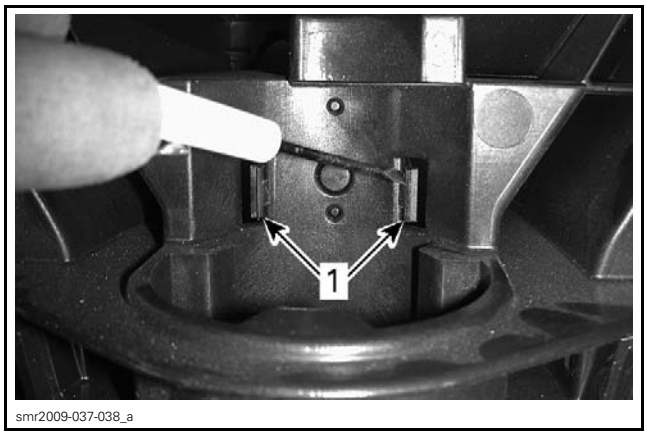

1. Switch retaining tabs

Reverse removal procedure to reinstall the O.T.A.S. switch.

O.T.A.S. MAGNETS

Replacing the Magnets

1. Remove *STEERING COLUMN*, see procedure in this subsection.
2. Pull magnets off the steering column.

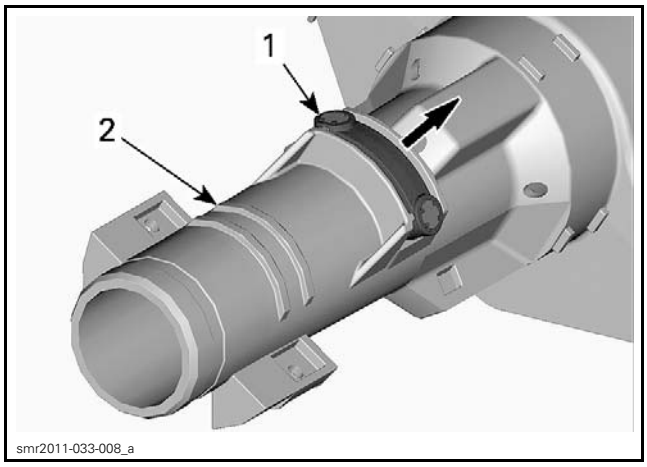

1. Magnets
2. Steering column

Reverse removal procedure to reinstall the magnets.

iBR AND VTS

SERVICE TOOLS

Description	Part Number	Page
DIAGNOSTIC HARNESS	529 036 188	26
IBR NUT SOCKET	529 036 379	19

SERVICE PRODUCTS

Description	Part Number	Page
LOCTITE 5900	293 800 066	19, 24

iBR ACTUATOR

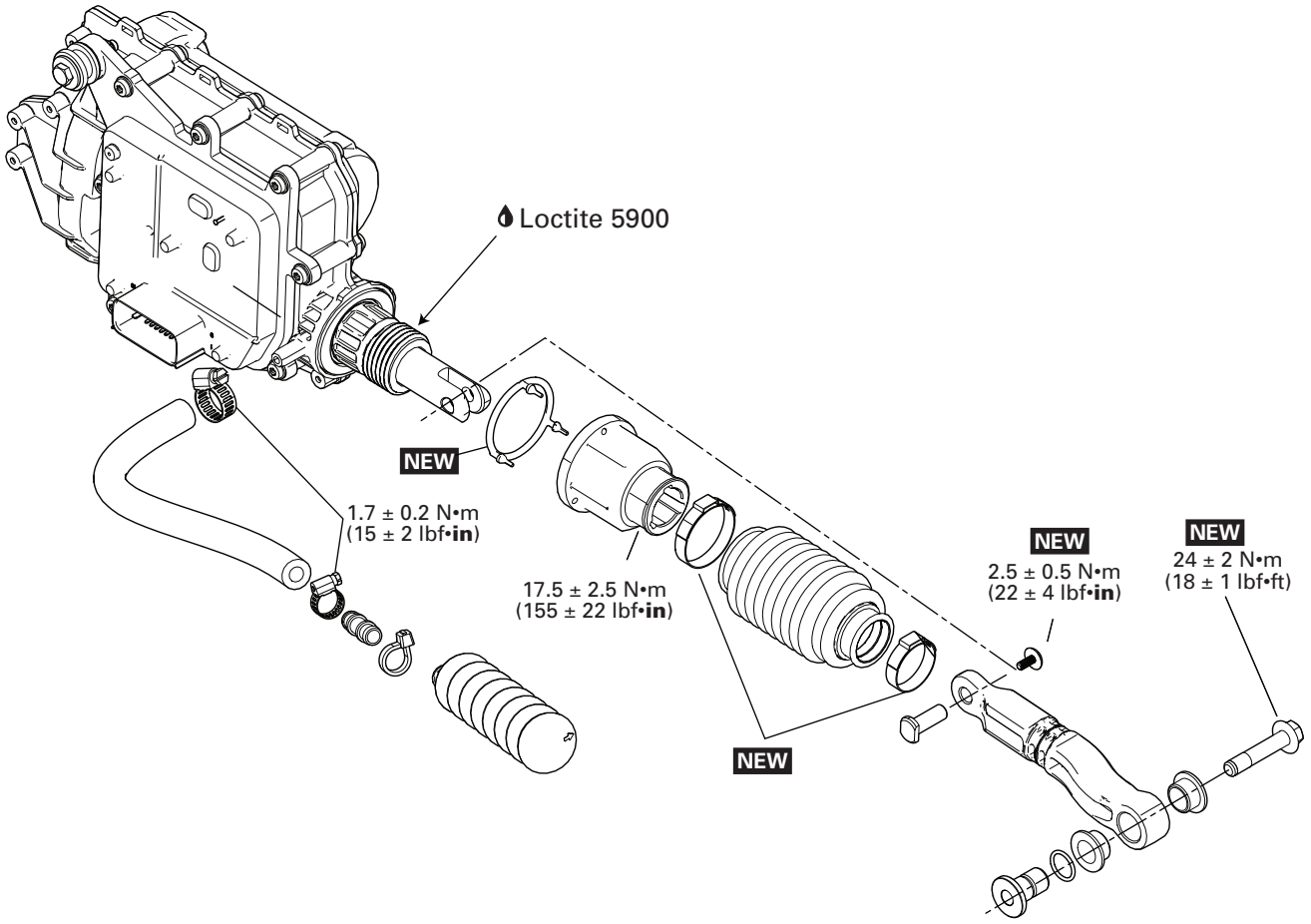

NEW = Component must be replaced when removed.

smr2016-036-002_a

iBR GATE SUPPORT BRACKET

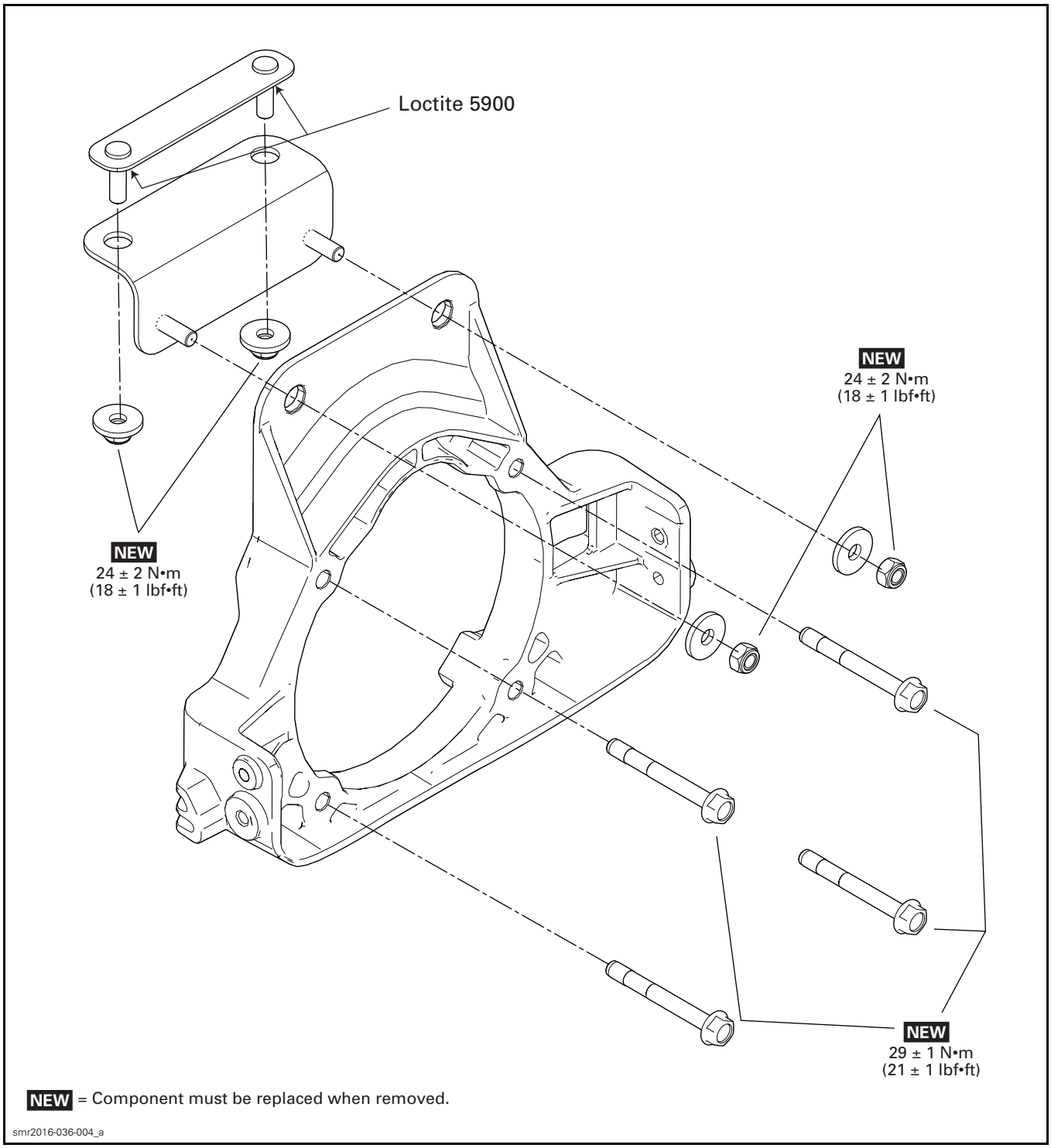

VTS TRIM RING

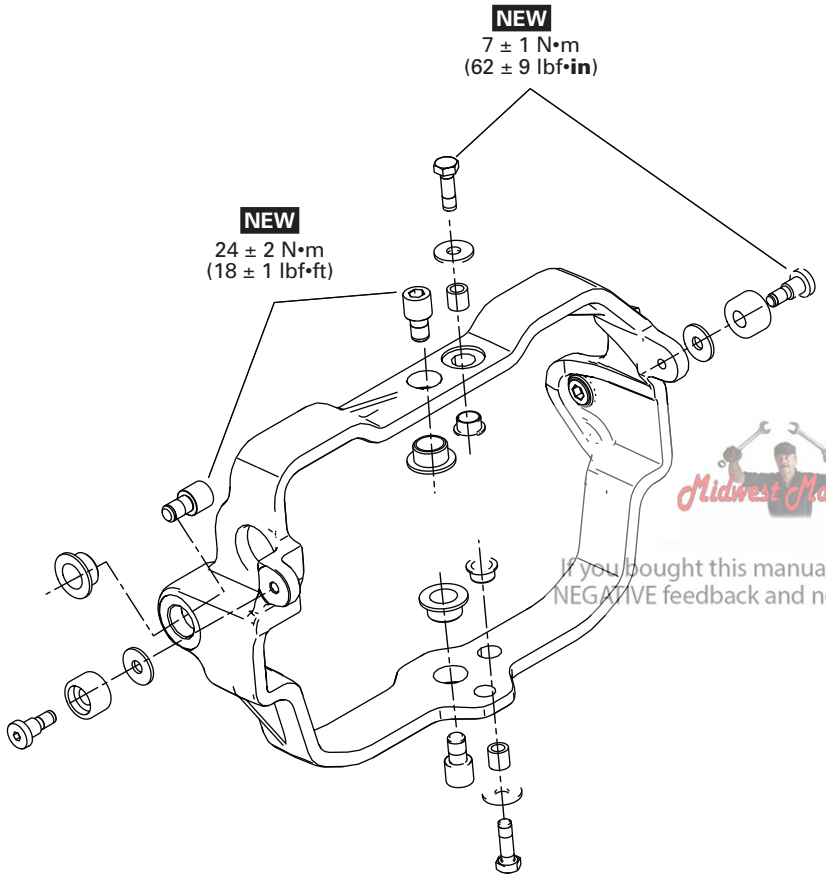

Midwest Manuals
Green Manuals
Paperless Manuals For a Better Tomorrow
If you bought this manual from any other seller please leave them NEGATIVE feedback and notify me at bestshopmanuals@gmail.com

NEW = Component must be replaced when removed.

smr2016-036-001_a

iBR GATE

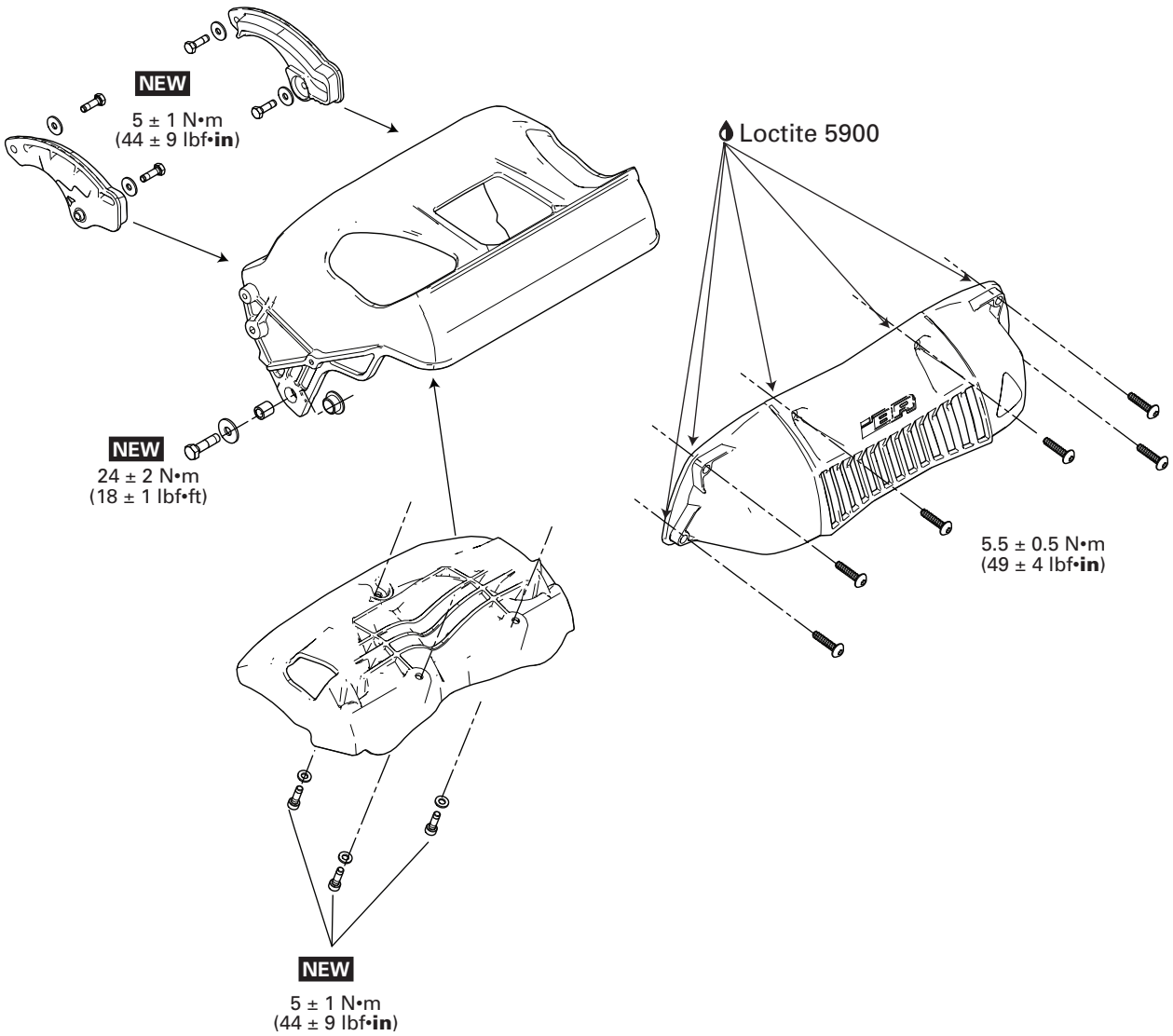

NEW = Component must be replaced when removed.

smr2016-036-003_a

NOZZLE AND STEERING MULTIPLIER

Steering multiplier on applicable models

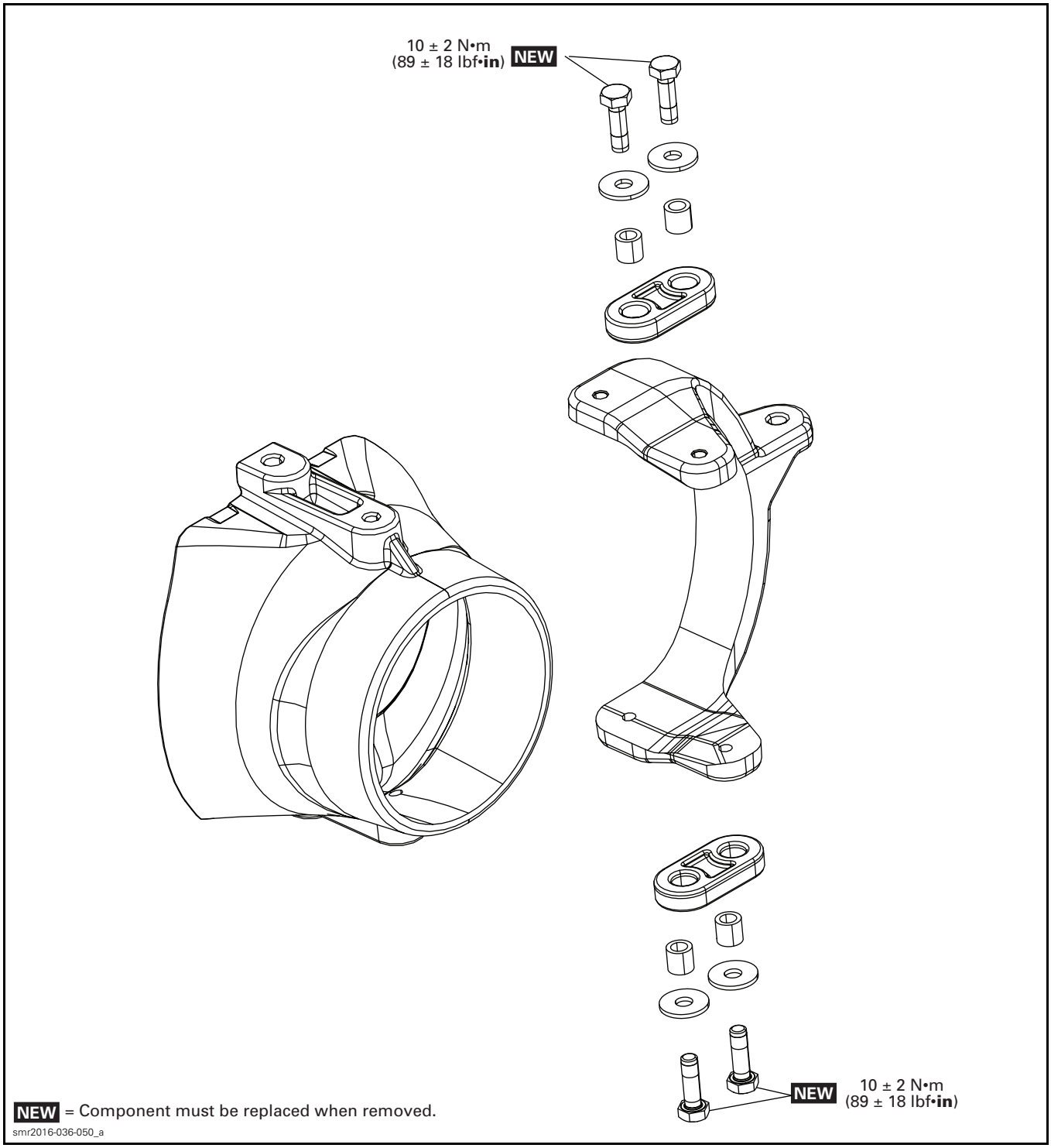

GENERAL

During assembly/installation, use torque values and service products as indicated in the exploded view.

Clean threads before applying a threadlocker. Refer to *SELF-LOCKING FASTENERS* and *LOCTITE APPLICATION* at the beginning of this manual for complete procedure.

⚠ WARNING

Torque wrench tightening specifications must be strictly adhered to.
Locking devices (e.g.: locking tabs, elastic stop nuts, self-locking fasteners, cotter pins, etc.) must be replaced with new ones.

Hoses, cables or locking ties removed during a procedure must be reinstalled as per factory standards.

SYSTEM DESCRIPTION (iBR)

The iBR (intelligent Brake and Reverse) is an electronically controlled braking and reverse system.

The iBR module controls the position of the iBR gate to provide forward thrust, reverse thrust, braking thrust, and neutral.

The operator commands the position of the iBR gate using either the throttle lever for forward thrust, or the iBR lever for neutral, reverse, and for the braking function.

The iBR lever is located on the LH side of the handlebar.

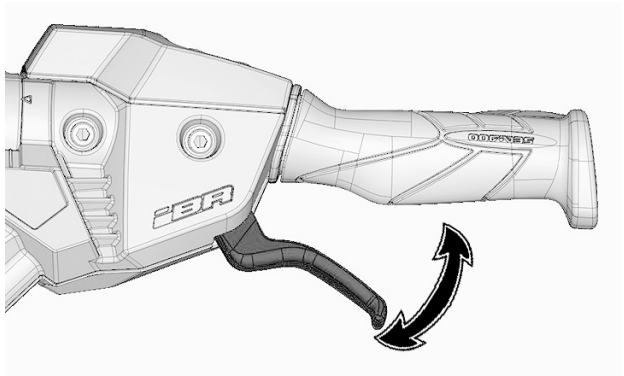

smr2016-036-006_a

When the iBR lever is pulled in, it operates the brake and reverse lever sensor (BRLS). It is a double output hall effect sensor. The redundancy is used for security purposes.

The BRLS sends the signals to the iBR module. The iBR module controls an electric motor that in turn raises or lowers the iBR gate through a mechanical drive unit.

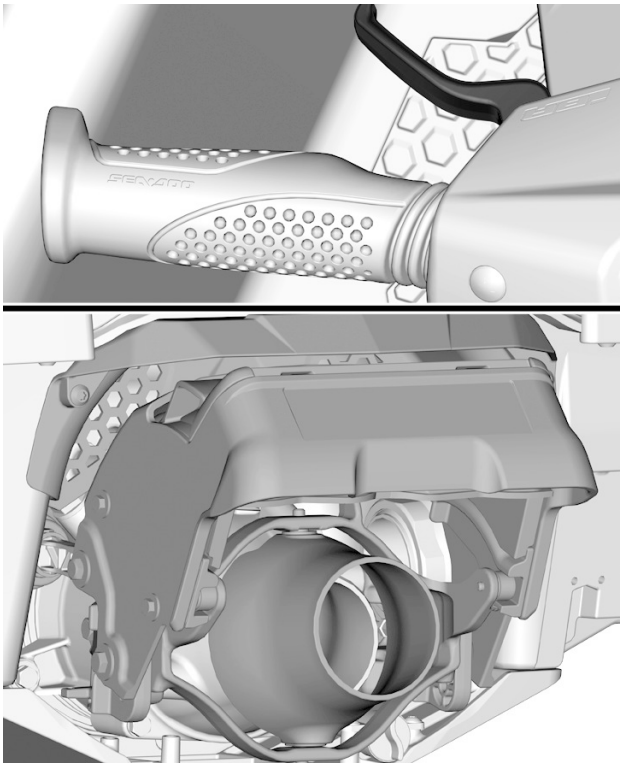

smr2014-119-001_a

TYPICAL - FORWARD

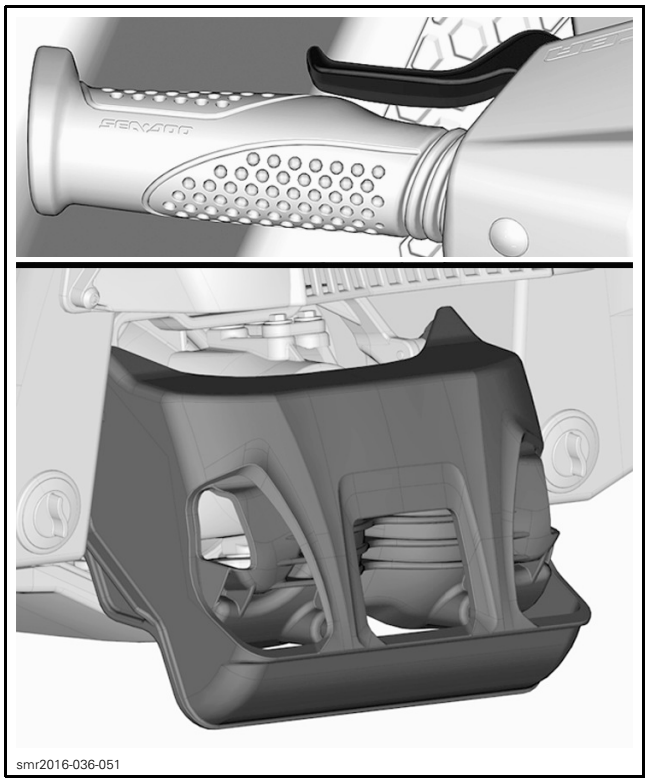

TYPICAL - REVERSE

NOTE: The iBR gate will move when commanded by the iBR lever only if the engine is running. For maintenance purposes, the iBR OVERRIDE function available through the gauge can be used to electrically move the gate to the desired position.

Depending on vehicle speed and how far the iBR lever is pulled in, the iBR module will automatically adjust the iBR gate movement speed and stroke.

NOTE: The iBR lever must be pulled in at least 25% of its travel (approximately) before the iBR gate starts to move. The first 25% of iBR lever travel has no effect on the iBR gate.

Every time the iBR gate moves when commanded by the iBR lever, engine RPM is momentarily reduced to idle speed as the gate moves.

⚠ WARNING

If it is necessary to remove any foreign object catch in the iBR gate, nozzle or linkages, strictly observe the following before proceeding:

- **Remove tether cord from engine cut-off switch.**
- **Wait at least 5 minutes or remove iBR fuses.**
- **Do not press on START/STOP button. If START/STOP button is pressed, wait another 5 minutes.**

Forward Mode

To engage forward:

- Start engine
- Pull in the throttle lever.

The iBR gate will automatically move to the forward position (full up).

NOTE: The full up position of the iBR gate is dependent on the selected VTS trim position.

Reverse Mode

If the watercraft speed is below 14 km/h (9 MPH) when the iBR lever is pulled in, reverse mode is engaged.

When the iBR lever is pulled in to engage reverse, the following occurs:

- Engine RPM is reduced to idle.
- The iBR gate moves to the reverse position.
- Engine RPM ramps up to the engine power commanded by the throttle lever.

When operating in reverse mode, the iBR lever controls the iBR gate position and the engine RPM is controlled by the throttle lever.

Maximum engine RPM in reverse is 5000 RPM.

Braking Mode

If the watercraft speed is 14 km/h (9 MPH) per hour and above when the iBR lever is pulled in, braking mode is engaged.

When the iBR lever is pulled in to engage braking, the following occurs:

- Engine RPM is reduced to idle.
- The iBR gate moves to the maximum down position.
- Engine power is requested by the iBR module depending on inputs of vehicle speed and iBR lever position.

When operating in braking mode, the iBR gate always moves to the maximum down position. The throttle lever signal is overridden and engine RPM is now dependent on watercraft speed and how far the iBR lever is pulled in.

If watercraft speed is high when braking is applied, engine power will be initially low and then ramp up to the power commanded by the iBR module. The engine RPM may be increased, as necessary, to apply a stronger braking effect with the jet pump thrust when the conditions dictate.

As the watercraft slows to less than 8 km/h (5 MPH), the following occurs:

- Braking mode ceases.

– Reverse mode takes over if the iBR lever is not released.
– Throttle control reverts back to the throttle lever.

Neutral Mode

Every time the iBR lever is pulled in and released, the iBR gate will default to the **neutral** position, except if the throttle lever is still pulled in when the iBR lever is released. If the throttle lever is still pulled, the iBR gate will move to the forward position when the iBR lever is released and the watercraft will accelerate forward.

iBR Override Function

Refer to *IBR ACTUATOR*.

SYSTEM DESCRIPTION (VTS)

The VTS system is actually part of the iBR system.

It provides watercraft pitch trim adjustments by adjusting the horizontal position of the jet nozzle.

The VTS can be electrically trimmed to the desired attitude within the VTS range, or to one of 2 preset trim positions (on applicable models).

The VTS switch (or Up/Down switch) sends command signals to the gauge. The gauge converts them to CAN protocol and sends them through the CAN bus to the iBR module on the iBR actuator. The actuator then moves the iBR gate which moves the nozzle to the desired trim position.

NOTE: The nozzle and iBR gate move together in the VTS trim range up to the maximum nozzle down position. If NEUTRAL, BRAKING or REVERSE is engaged, the iBR gate moves past the VTS full down position. When FORWARD thrust is reengaged, the nozzle and iBR gate move up to the last selected VTS trim position.

The nozzle trim position can be seen on the VTS position indicator in the information center.

NOTE: Changing the VTS trim position only changes the indication. The nozzle will move to the selected VTS trim position when forward thrust is engaged.

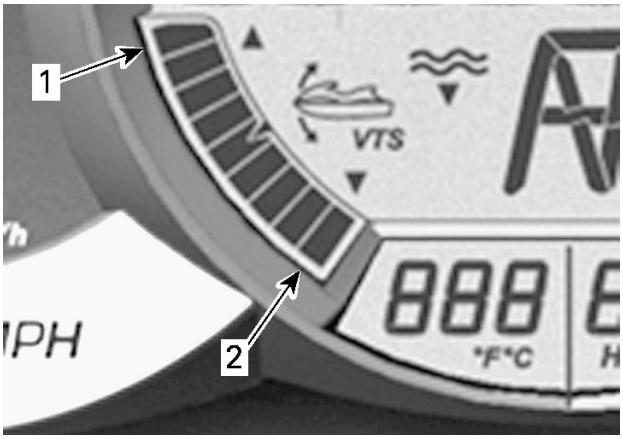

sdd2009-001-042_a

INFORMATION CENTER — VTS POSITION INDICATOR
1. Bow up
2. Bow down

NOTE: Only the segment indicating the relative position of the VTS will be on. The illustration shows all segments on as can be seen during the self test function.

The VTS system provides the following features according to models
– Nozzle trimming
– Selection of 2 preset trim positions
– Recording of 2 preset trim positions.

Nozzle Trimming

Watercraft must be operating in forward position.

Depending on the model, 5 or 9 trim positions are available.

Using the VTS Button (LH Side of Handlebar)

Models with VTS buttons

Press the UP or DOWN arrow button to change the VTS setting.

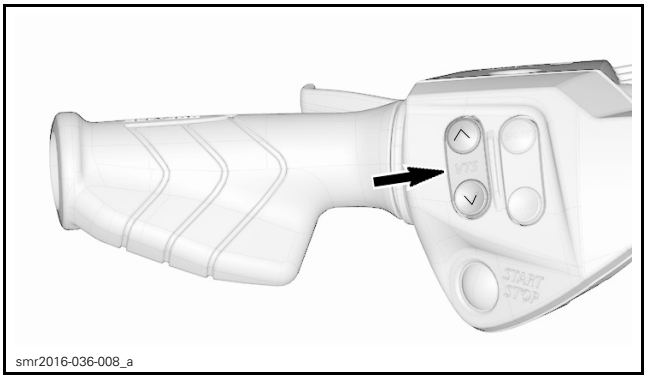

smr2016-036-008_a

TYPICAL - VTS CONTROL BUTTON

Using the Up/Down Button (RH Side of Handlebar)

Models without VTS buttons

1. Press the MODE button to display the VTS function in the gauge.
2. Press the UP or DOWN arrow button to change the VTS setting.

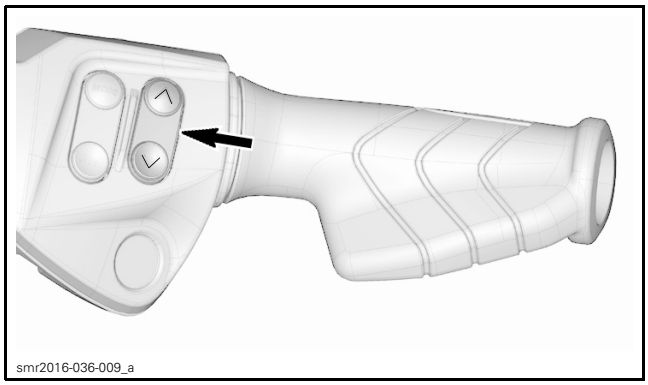
smr2016-036-009_a

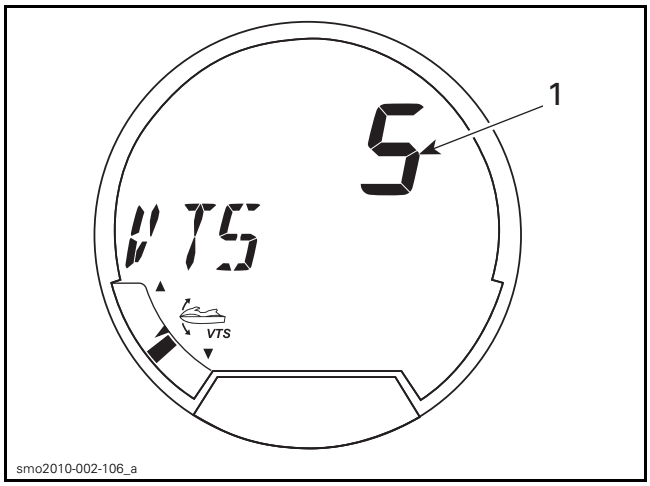

smo2010-002-106_a

FUNCTION SELECTED - VTS
1. VTS setting

3. Press the SET button to save the desired setting.

Using Preset Trim Positions

Two preset trim positions can be selected.

To select the **highest** trim position recorded, double-click on the VTS UP arrow button (bow up).

To select the **lowest** trim position recorded, double-click on the VTS DOWN arrow button (bow down).

Recording Preset Trim Positions

Two different VTS trim positions may be recorded for quickly selecting the preferred watercraft trim attitude.

When the VTS PRESET trim positions are changed, the new settings will remain recorded in memory.

To record VTS preset trim positions:

1. Press the START/STOP button.
2. Install the tether cord on the engine cut-off switch.
3. Press the MODE button repeatedly until VTS MODE is displayed.

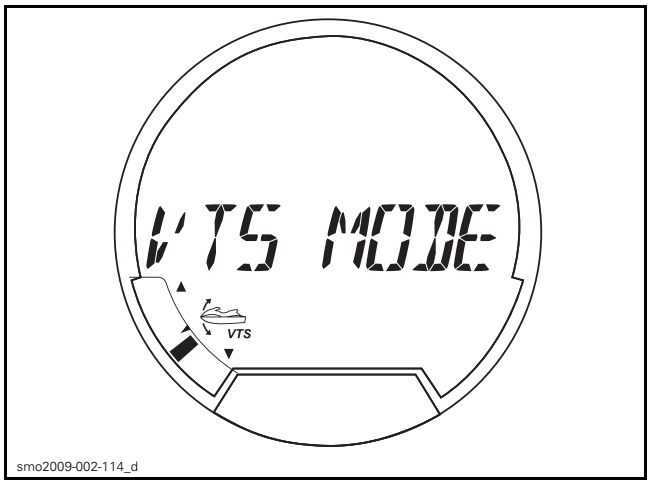

smo2009-002-114_d

FUNCTION SELECTED - VTS MODE

4. Press the SET button to display PRESET 1.
5. Press the VTS UP/DOWN button to change the PRESET 1 VTS position.

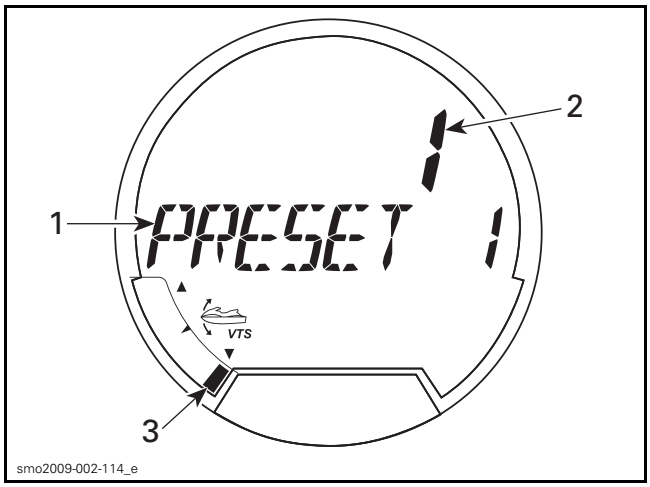

smo2009-002-114_e

FUNCTION SELECTED - PRESET 1
1. Preset 1 function
2. VTS setting selected to 1
3. VTS position indicator at setting 1 (bow down)

6. Press the SET button to save PRESET 1 and display PRESET 2.
7. Set PRESET 2
8. Press the SET button to save the settings.

NOTE: The VTS system will compare the preset trim settings recorded, the highest position will be assigned to the UP arrow (bow up), the lowest to the DOWN arrow.

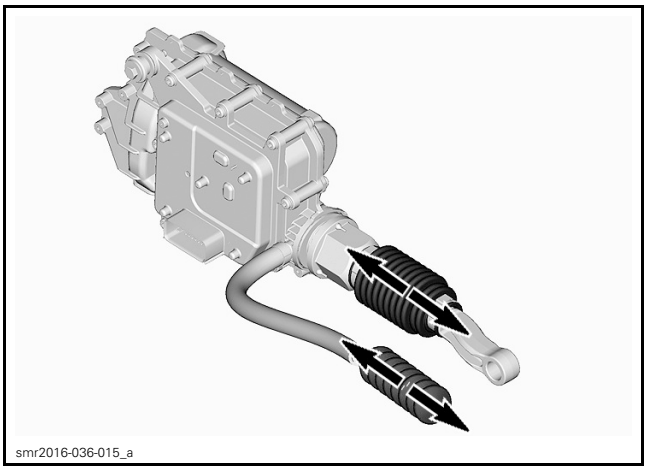

iBR ACTUATOR AIR CHAMBER MOVEMENT

iBR ACTUATOR

The iBR actuator is a sealed unit. As the actuator shaft moves, air is transferred between the boot and the air chamber.

Nomenclature

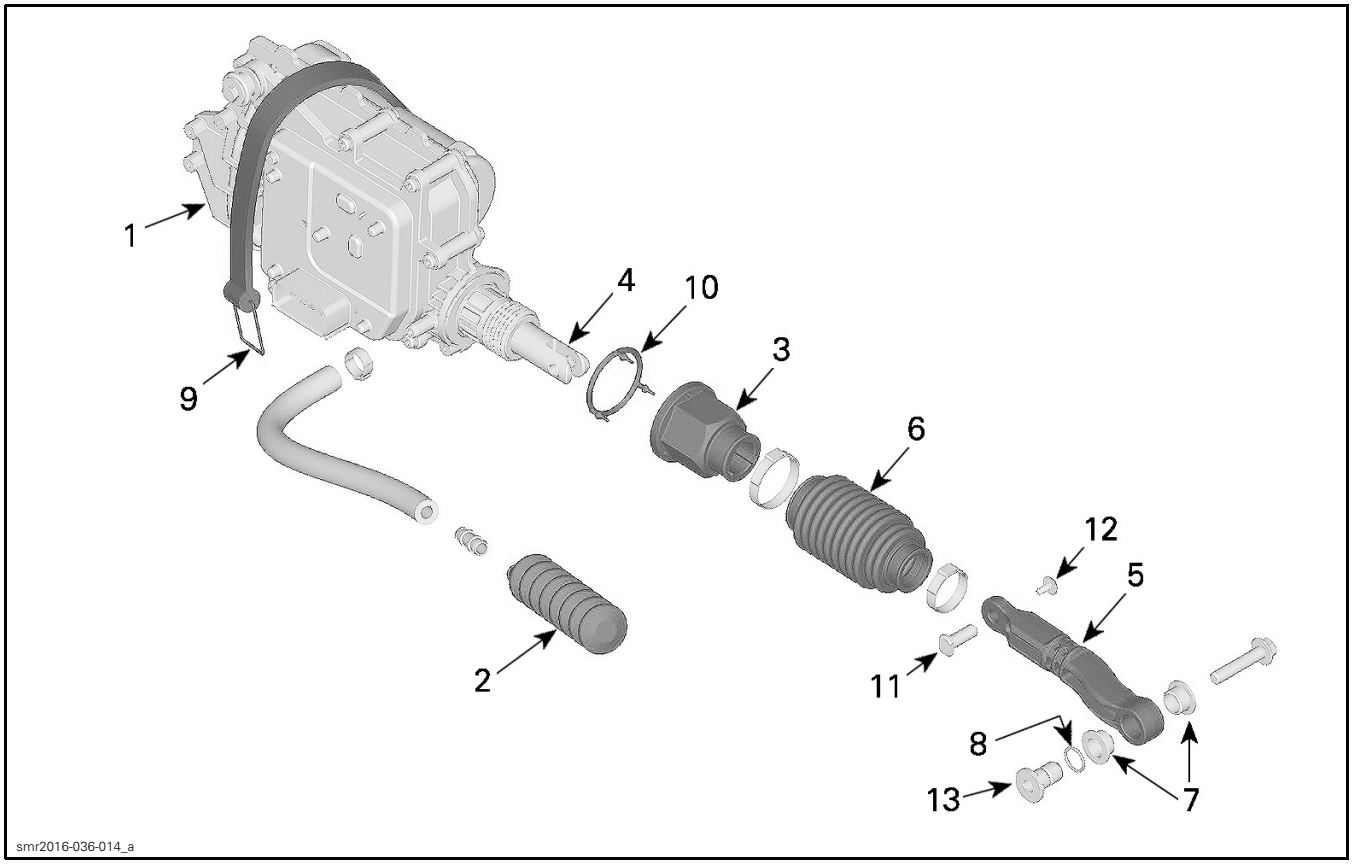

iBR ACTUATOR COMPONENTS
1. *Actuator*
2. *Air chamber*
3. *iBR nut*
4. *Actuator shaft*
5. *Connecting arm*
6. *Connecting arm boot*
7. *Plastic bushing*
8. *O-ring*
9. *Retaining strap*
10. *iBR nut o-ring*
11. *Connecting arm pin*
12. *Connecting arm pin screw*
13. *Shoulder sleeve*

iBR Override Function

iBR override moves the iBR actuator through its full range of motion.

NOTICE **Remove any foreign object that may obstruct iBR actuator movement.**

Activating iBR Override Function

1. Press the START/STOP button.
2. Install the tether cord.

NOTE: Do not start the engine. The tether cord must be installed to ensure the information center will not shut off all indications after its self test function. Briefly press the START/STOP button to reactivate the electrical system when required.

3. Pull in the iBR lever;
   3.1 There will be a beep.

Models with a VTS Switch

4. Press the VTS UP or DOWN button to move the iBR gate.

Models Without a VTS Switch

5. Press the UP/DOWN arrow button (RH handlebar) to move the iBR gate.

IBR GATE SUPPORT BRACKET

The iBR gate support bracket secures the iBR gate and support assembly to the watercraft.

IBR GATE

The iBR gate can move up and down.

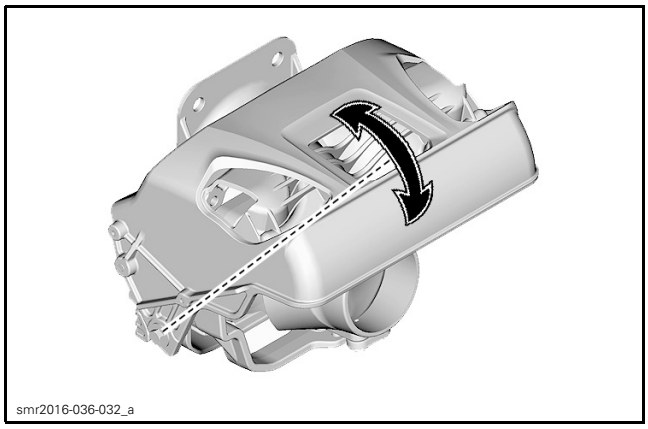

WATERCRAFT DIRECTION	GATE POSITION
Forward	UP
Neutral	Neutral
Reverse	Down

Nomenclature

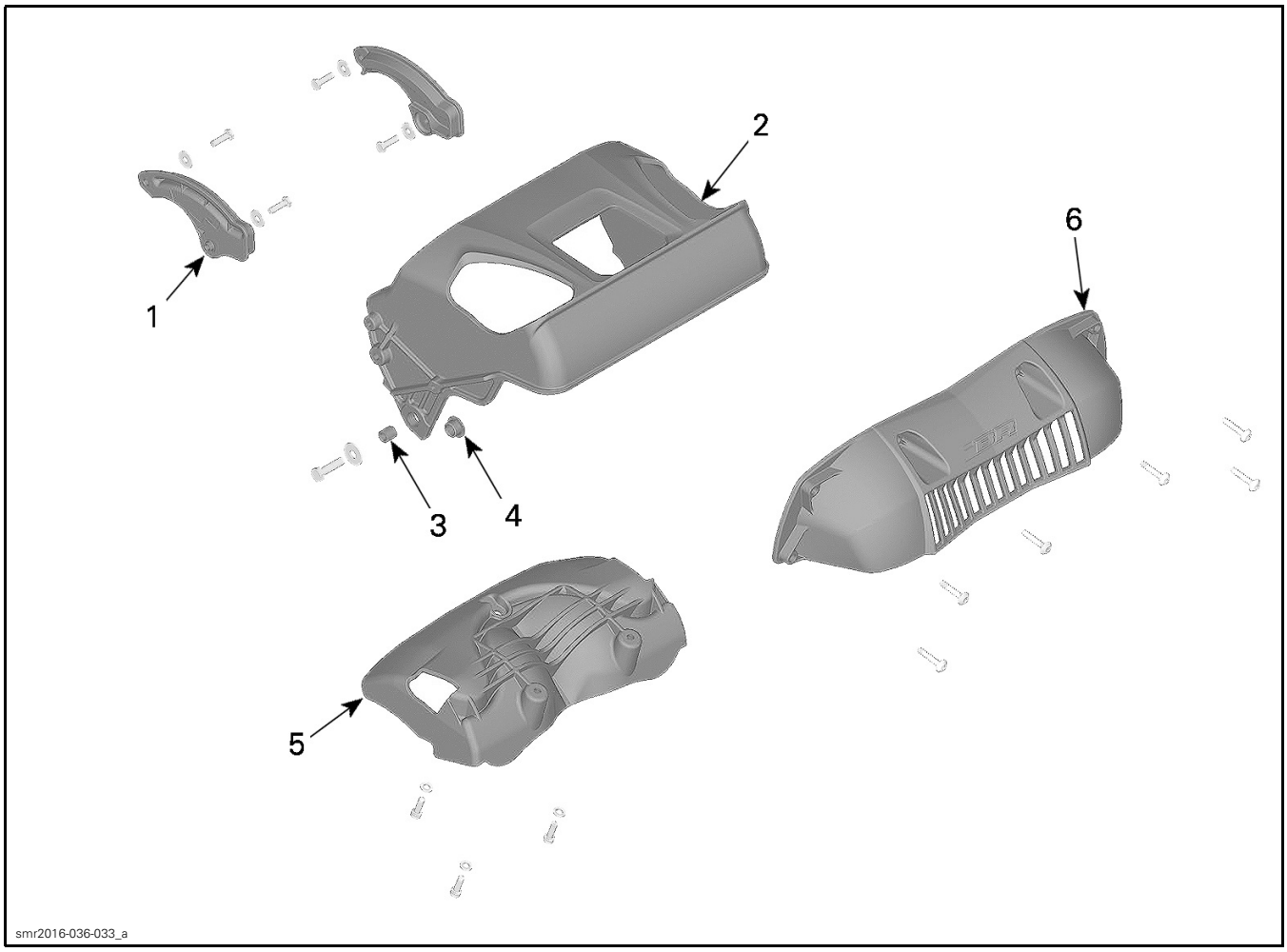

1. *iBR ramps*
2. *Gate*
3. *Sleeve*
4. *Plastic bushing*
5. *Inner gate*
6. *Guard*

VTS TRIM RING

The VTS trim ring supports the steering nozzle.

The VTS trim ring also allows VTS adjustment on applicable models.

Nomenclature

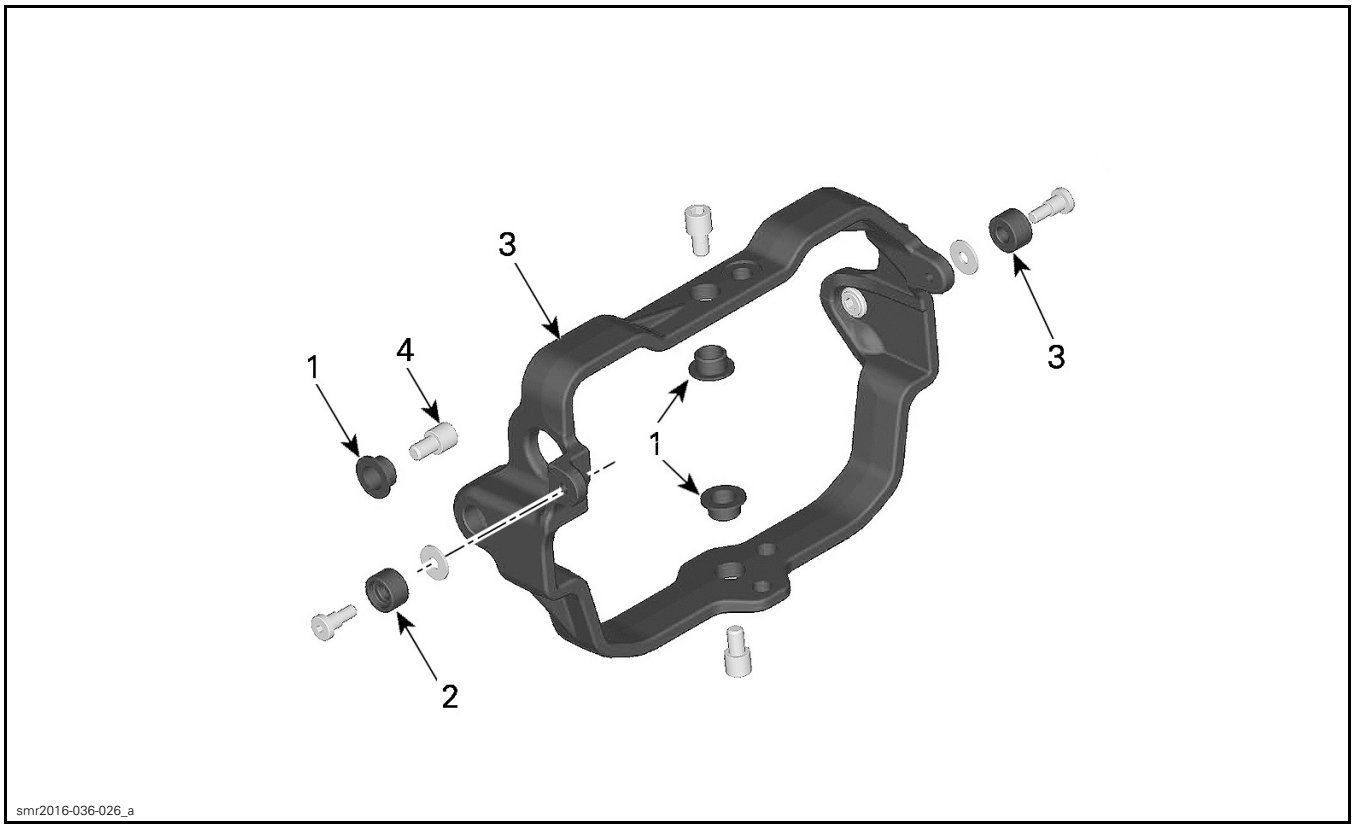

smr2016-036-026_a

1. *Plastic bushing*
2. *Roller bushing*
3. *VTS trim ring*
4. *Pivot screw*

BRAKE AND REVERSE LEVER SWITCH (BRLS)

The BRLS is a double potentiometer type sensor. It produces 2 signals (redundancy) for self-monitoring.

ADJUSTMENT

iBR AUTO CALIBRATION USING B.U.D.S.

NOTICE **iBR auto-calibration must be performed with the complete reverse gate assembly properly installed. Performing the auto-calibration procedure without the reverse gate assembly in place will damage the actuator.**

Perform after repairing or removing the jet pump and/or iBR system components.

Connect B.U.D.S.

New iBR Actuators

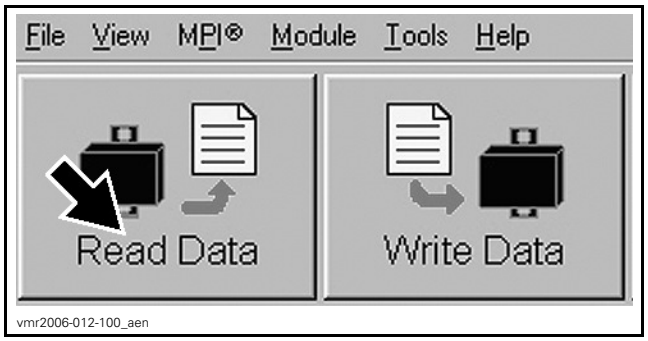

vmr2006-012-100_aen

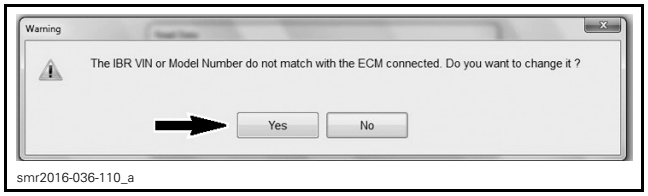

smr2016-036-110_a

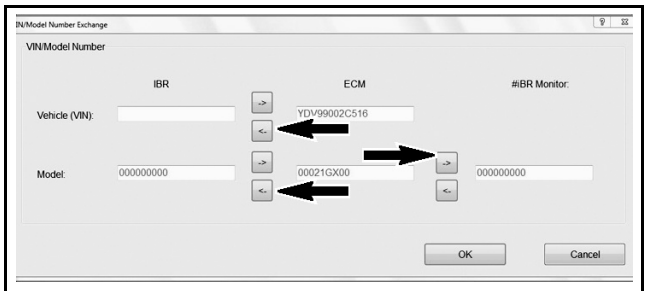

smr2016-036-101_a

NUMBERS VARY BY UNIT

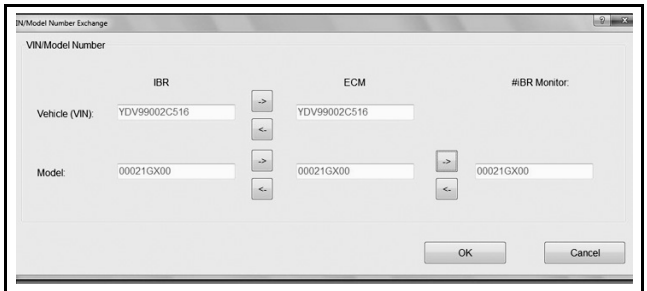

smr2016-036-102_A

NUMBERS VARY BY UNIT

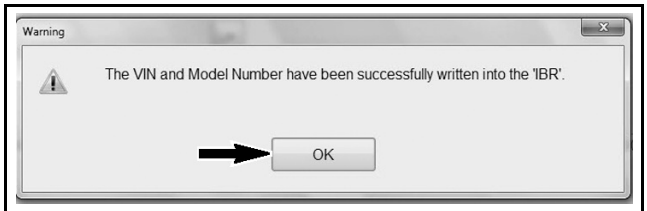

smr2016-036-104_a

smr2016-036-105_a

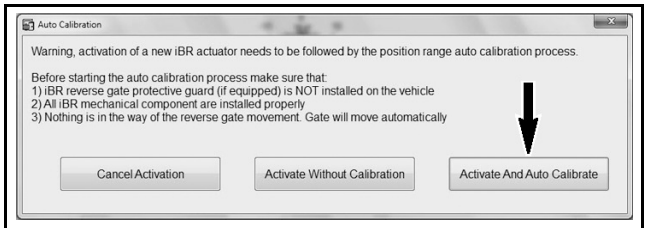

smr2016-036-106_a

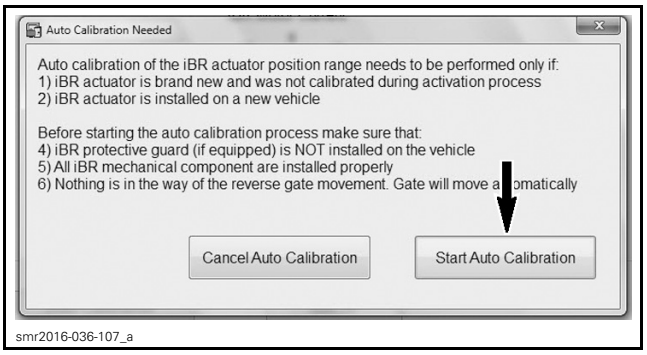

smr2016-036-107_a

Previously Installed (Activated) iBR Actuators

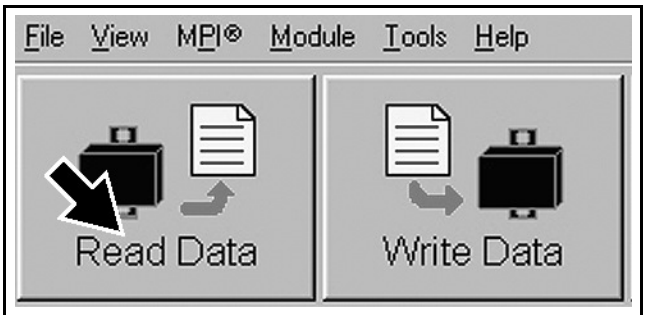

vmr2006-012-100_aen

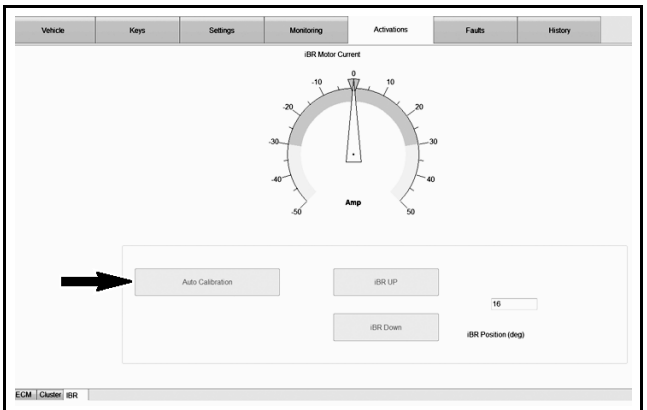

smr2016-036-109_a

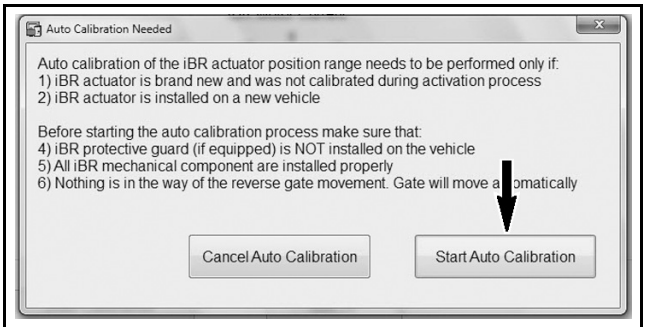

smr2016-036-107_a

INSPECTION

INSPECTION POINTS

Inspect:
- Inspect connecting arm boot condition
- Inspect roller bushings. They should not be deformed and must spin freely.
- Inspect plastic bushings. They should not be loose or deformed.
- Inspect iBR ramps for wear or cracking.

TESTING SEQUENCE

To troubleshoot the iBR system, carry out the following in this order:
- Ensure the iBR gate movement is not obstructed in any way.
- Ensure the iBR gate mechanism is in good condition and does not show signs of excessive wear or friction.
- Check system fuses.
- Check battery condition and state of charge.
- Make sure battery connections are clean and tight.
- Connect the watercraft to B.U.D.S. to check for iBR system or CAN bus related fault codes. Carry out service actions as indicated in B.U.D.S.
- If a CAN bus communication fault with the iBR actuator is indicated, or the iBR actuator is not visible in B.U.D.S., carry out a continuity test of the CAN bus wires.
- Try moving the iBR using the iBR UP and iBR DOWN buttons on the iBR activation page in B.U.D.S.
- Check for proper gate and actuator movement. Refer to *TESTING iBR SYSTEM*.
- Visually inspect system connectors for moisture ingress, corrosion, and proper contact.
- Remove the screw retaining the gate to the connecting arm. Move the gate up and down by hand to check for freedom of movement.

IBR SYSTEM FUNCTIONAL TEST

Test on Dry Land

NOTE: This test requires two persons. One person to start engine and operate controls, and one person to observe iBR gate movement.

1. Provide adequate ventilation of exhaust gases or move watercraft outside.

NOTICE **Do not install an exhaust ventilation hose in the iBR gate area or damage may occur when the iBR gate moves downward during operation.**

2. Connect a water hose to the watercraft to provide exhaust system cooling when operating engine. Refer to *EXHAUST SYSTEM* subsection for procedure.

NOTICE
- **Ensure there are no tools or other object that may interfere with the iBR gate movement.**
- **Do not run engine for more than 2 minutes out of water or damage may occur.**

⚠ WARNING

The person observing the iBR gate movement must stand to the side of the stern well clear of the iBR gate and pump nozzle in full view of the operator.

3. Start engine and let idle.

NOTE: If iBR gate was not in the neutral position, it will move to the neutral position on engine start up.

4. Depress the throttle lever slightly and visually confirm the iBR gate moves to the forward position (up to the VTS trim position), then release throttle. The iBR gate must remain in the forward position.
5. Depress the iBR lever fully and confirm the iBR gate moves to the full down position.
6. Release the iBR lever completely and confirm the iBR gate moves to the neutral position.
7. Disconnect water hose then shut engine off.

Test with Watercraft on a Waterway

1. Start engine and let idle.

NOTE: If iBR gate is not in the neutral position before the engine start, it will move to the neutral position on engine start up.

2. Depress the throttle lever slightly, then release it. Forward movement of the watercraft confirms the iBR gate has moved to the forward position.
3. Depress the iBR lever fully. Rearward movement of the watercraft confirms the iBR gate has moved to the reverse position.
4. Release the iBR lever completely. Reverse thrust should cease and the watercraft should continue to drift rearward on momentum.

5. Apply a small amount of forward thrust to stop rearward velocity, then tap the iBR lever to return the iBR gate to neutral.
6. Shut engine off.

TROUBLESHOOTING

The iBR system is self monitoring. If a fault occurs in the iBR system, it will raise a fault code and communicate it to the information center through the CAN bus. The information center will turn on the iBR indicator light to advise the operator of the iBR system fault. If the fault remains active, it may be displayed in the gauge. If it is no longer active, B.U.D.S. must be used to read the fault.

PROCEDURES

iBR ACTUATOR

Specifications

Always refer to *WIRING DIAGRAM*.

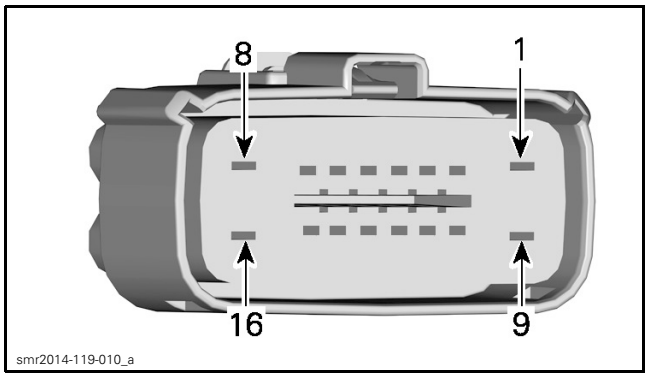

IBR ACTUATOR CONNECTOR

IBR ACTUATOR CONNECTOR	
PIN	SIGNAL
iBR-1	Battery voltage (Hot at all times)
iBR-2	Battery voltage (Hot with main relay on)
iBR-8	Ground

iBR ACTUATOR CURRENT DRAW	
DOWN SELECTION	-5 to -15 A
UP SELECTION	+10 to +20 A

Testing iBR Actuator Operation Using B.U.D.S.

1. Click the **Activation** tab.
2. Click the **iBR** tab.

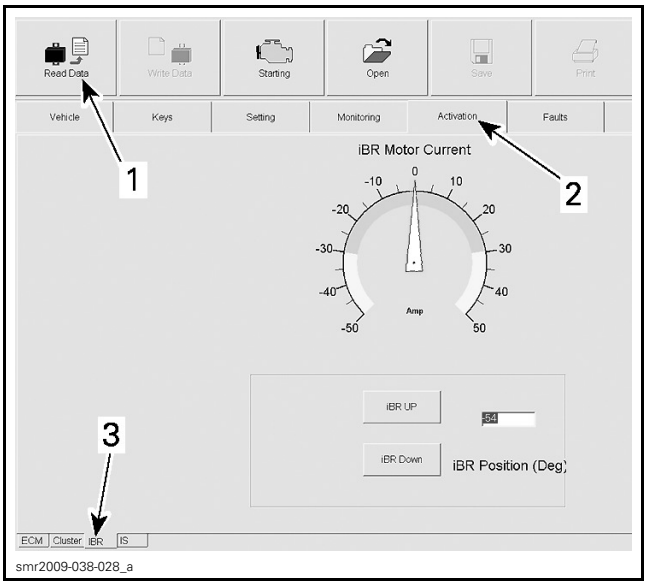

TYPICAL
1. *Read Data*
2. *Activation page*
3. *iBR tab*

3. Click **iBR UP** and **iBR DOWN** buttons alternately and look for a change in **iBR Position (Deg)**.

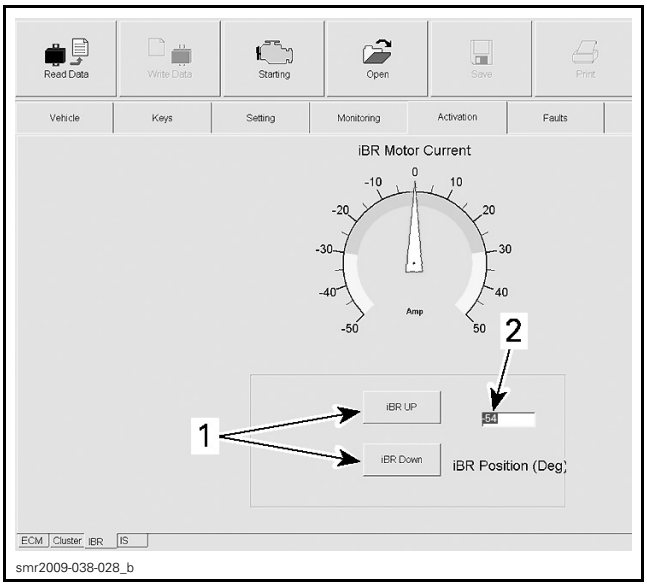

TYPICAL
1. *iBR UP/DOWN buttons*
2. *iBR position indication*

If the iBR moves using these buttons but does not move using the iBR lever, test *BRLS VOLTAGE* in this subsection.

If the iBR does not move, check the iBR fuse(s) in fuse box. If fuse(s) are good, check power and ground circuits.

Testing iBR Actuator Motor Current Using B.U.D.S.

1. On the iBR activation page in B.U.D.S., note the **iBR Position (Deg)** indication.

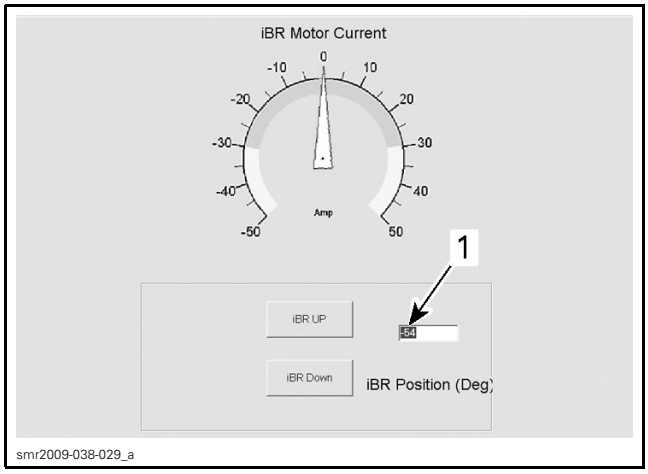

1. iBR position indication

2. Activate the iBR override function.
3. Move the iBR to the full up position and look for the **iBR Motor Current** indication in B.U.D.S. Also look for a change of **iBR Position (Deg)** indication.

NOTE: Current draw indication will not be stable. High and low peaks will be observed. Look for the maximum average current draw.

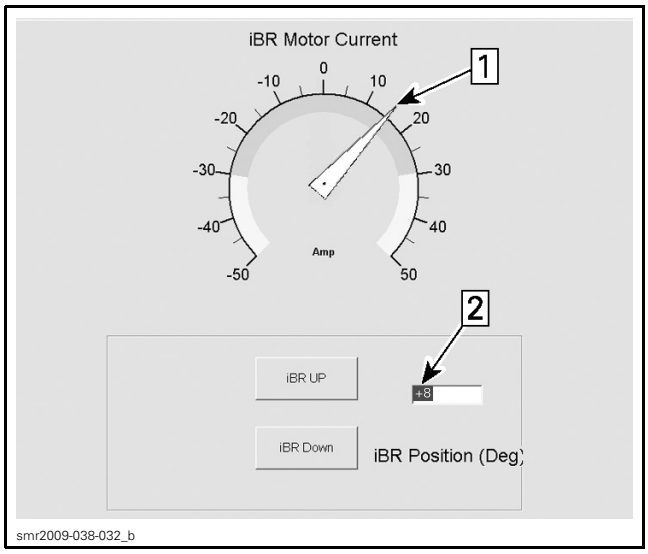

Step 1: Note iBR current draw
Step 2: Note iBR position indication change

4. Move the iBR to the full down position and look for the **iBR Motor Current** draw indication. Also look for a change of **iBR Position (Deg)** indication.

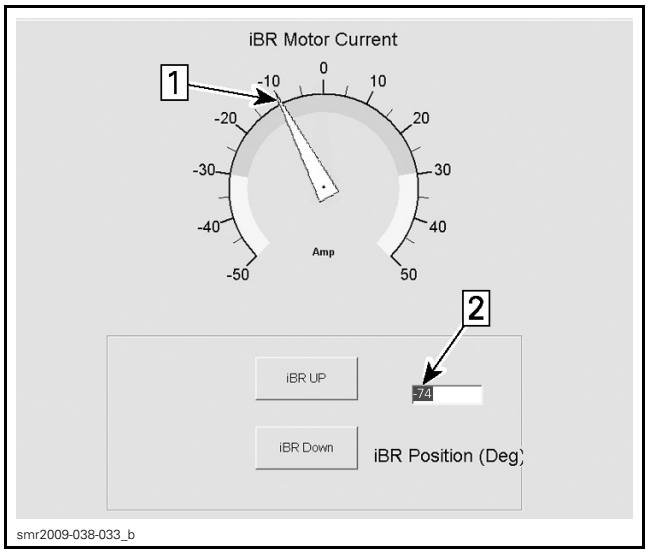

Step 1: Note iBR current draw
Step 2: Note iBR position indication change

If current draw is abnormally high (between 20 and 30 A), check the following:

– Ensure iBR gate is free of debris.
– Check for excessive friction in gate movement.
– Check roller bushings, plastic bushings and iBR ramps.
– Check for proper voltage to the iBR actuator.
– Check for fault codes using B.U.D.S.

Remove debris, replace iBR gate components, or replace the iBR actuator as applicable.

Removing the iBR Actuator

NOTICE **Do not try to manually force the iBR gate when all components are installed.**

1. Remove iBR gate assembly.
2. Remove small connecting arm boot Oetiker clamp.

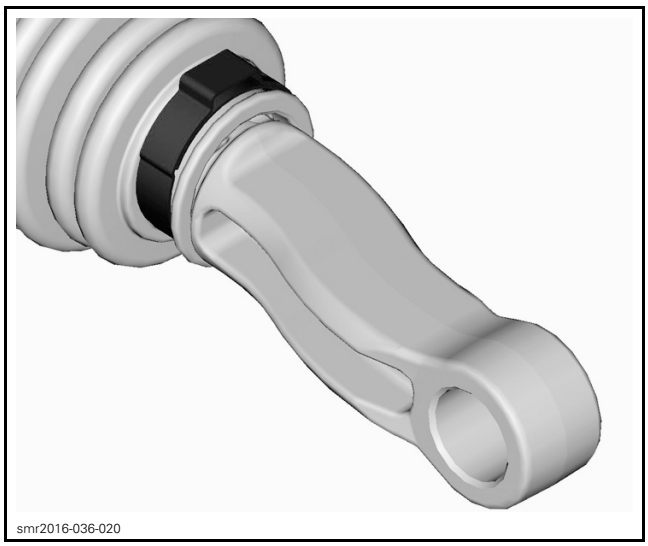

3. Remove connecting arm pin and screw.

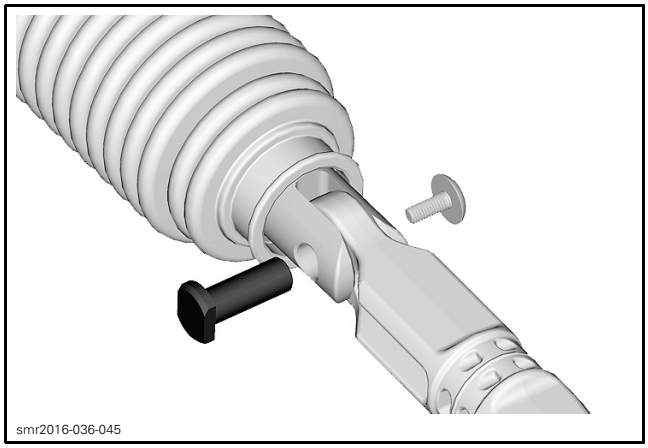
smr2016-036-045

4. Remove iBR nut and boot.IBR NUT SOCKET (P/N 529 036 379).

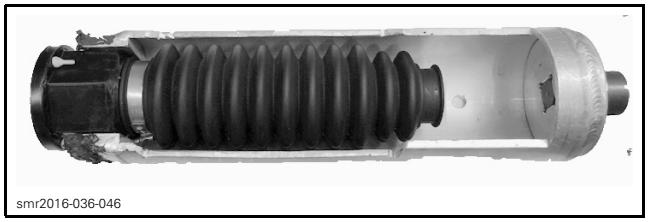
smr2016-036-046

5. Move muffler. Refer to *EXHAUST SYSTEM*.
6. Unplug electrical connector.
7. Remove retaining strap.
8. Remove iBR actuator and air chamber.

Installing the iBR Actuator

NOTICE **Failure to adhere to the sequence in the following steps will cause the iBR air chamber to rupture or burst and cause premature failure of the iBR actuator.**

1. Install the air chamber on the iBR actuator.
   1.1 Tighten the clamp.

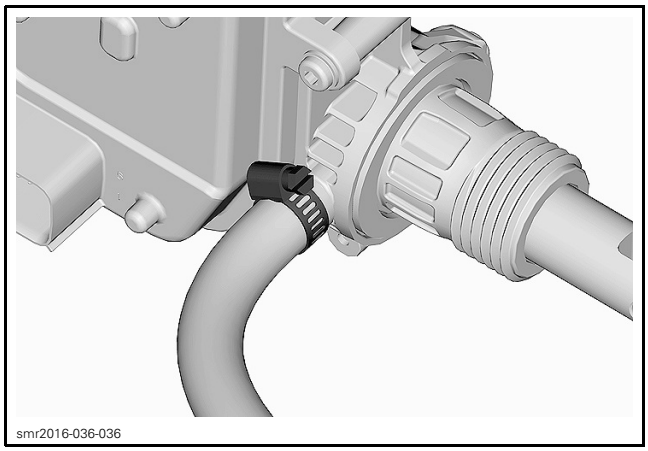
smr2016-036-036

2. Connect iBR actuator connector.
3. Install iBR actuator shaft through hull opening.
4. Slide the o-ring into position on iBR nut.

NOTICE **Apply LOCTITE 5900 (P/N 293 800 066) to iBR actuator threads only. Wipe off any excess on iBR shaft immediately.**

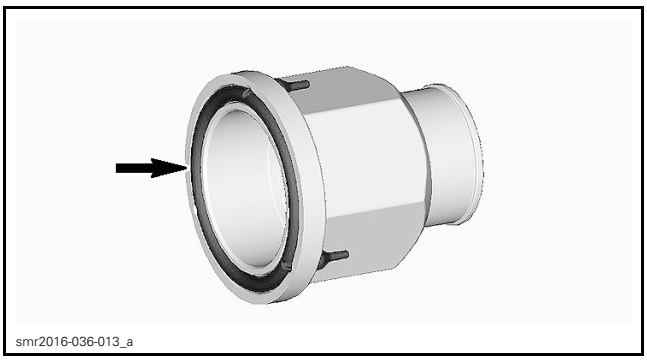
smr2016-036-013_a

NOTICE **Ensure no sealing agents contact the iBR shaft.**

5. Torque iBR nut.
6. Install strap.

New iBR Actuators Only

7. Refer to *iBR AUTO CALIBRATION USING B.U.D.S.* in this subsection and **activate without calibration** in order to use the iBR override function.

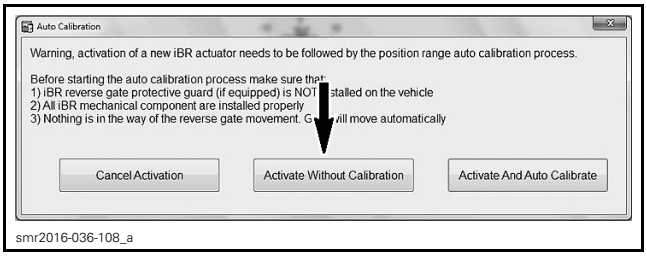

smr2016-036-108_a

All iBR Actuators

8. Install connecting arm.

Reverse removal procedure.

NOTICE **Allow 24 hours for thread locker on retaining screws to cure.**

Perform *IBR AUTO-CALIBRATION* procedure.

iBR GATE ASSEMBLY

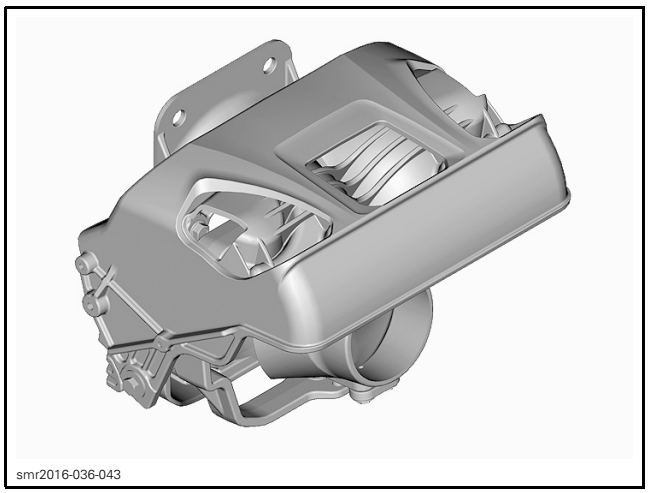
smr2016-036-043

Removing the iBR Gate Assembly

1. Remove the guard.

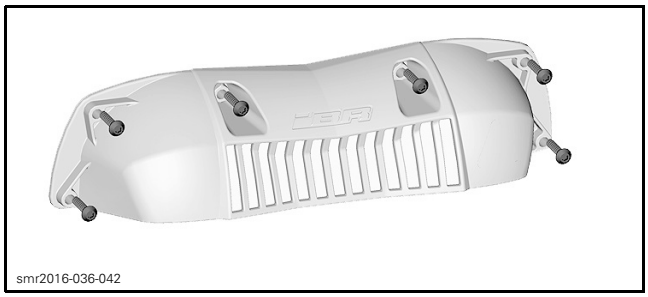
smr2016-036-042

2. Use the iBR overide function to lower the gate until the holes align.
3. Disconnect the connecting arm.

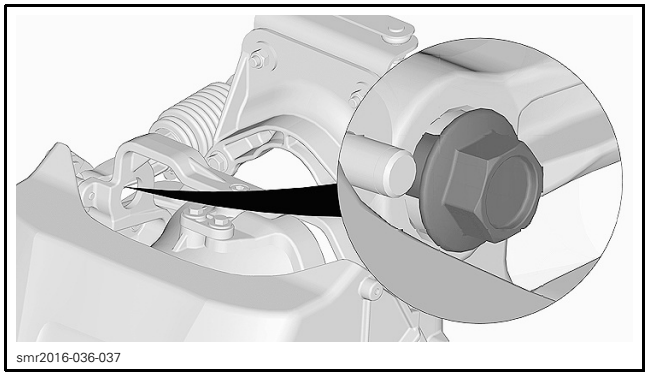
smr2016-036-037

4. Disconnect the steering cable. Refer to *STEERING AND O.T.A.S.* subsection.
5. Remove L-plate retaining nuts.

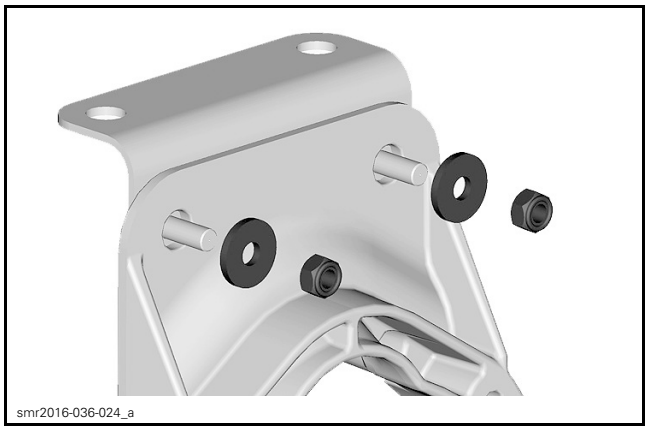
smr2016-036-024_a

6. Remove the iBR gate support bracket screws.

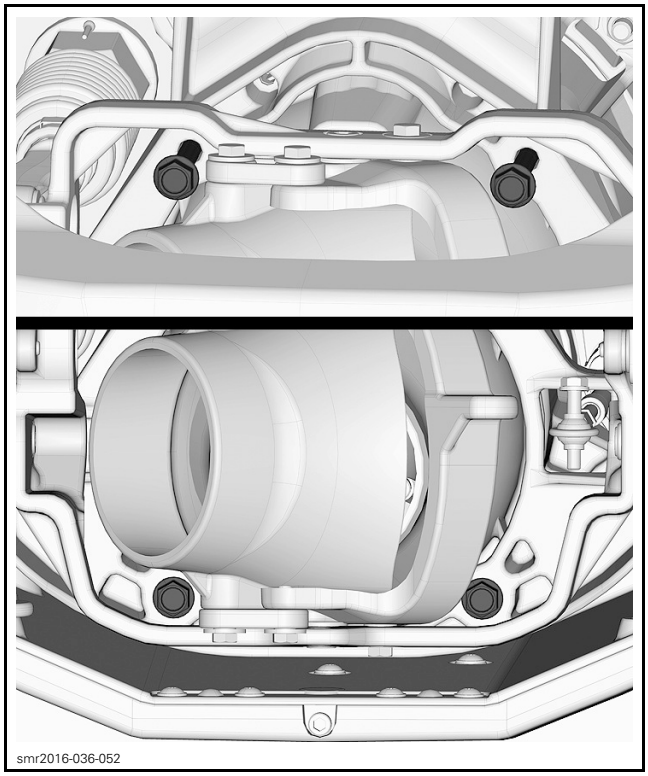
smr2016-036-052

TOP: GATE LOWERED / BOTTOM: GATE RAISED (BY HAND)

NOTICE Do not drop the venturi when removing the iBR Gate Assembly.

Installing the iBR Gate Assembly

TIGHTENING SEQUENCE

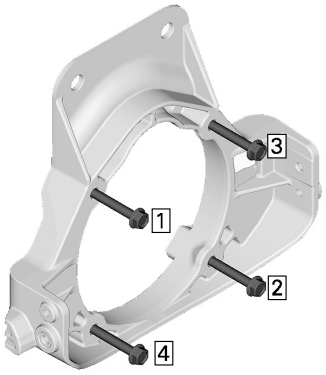

Reverse removal procedure.

NOTICE **Allow 24 hours for thread locker on retaining screws to cure.**

Perform *IBR AUTO-CALIBRATION* procedure.

iBR REVERSE GATE

smr2016-036-034

Removing the iBR Reverse Gate

Remove the iBR gate assembly.

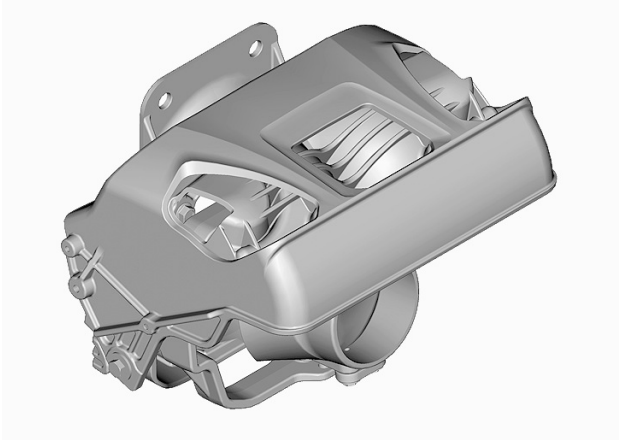

smr2016-036-043

Remove the iBR reverse gate.

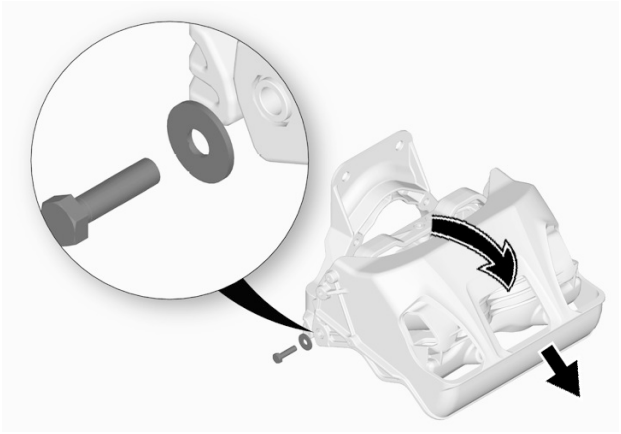

smr2016-036-028_a

CONNECTING ARM

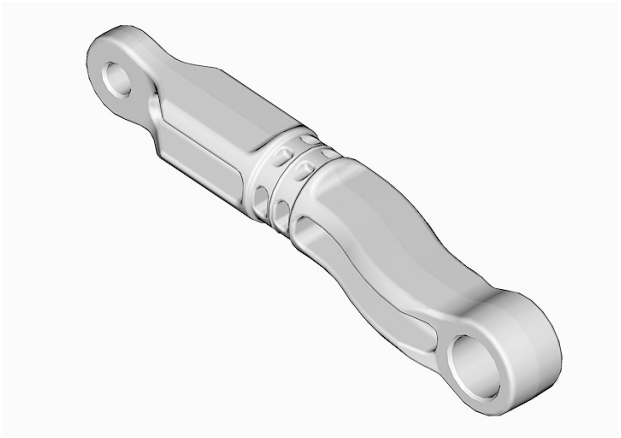

smr2016-036-049

Removing the Connecting Arm

1. Remove the iBR gate assembly. Refer to *IBR GATE ASSEMBLY*.

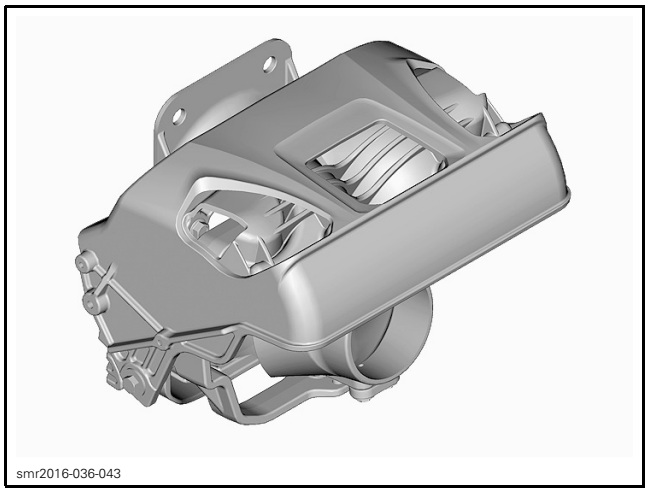
smr2016-036-043

2. Remove small connecting arm boot Oetiker clamp.

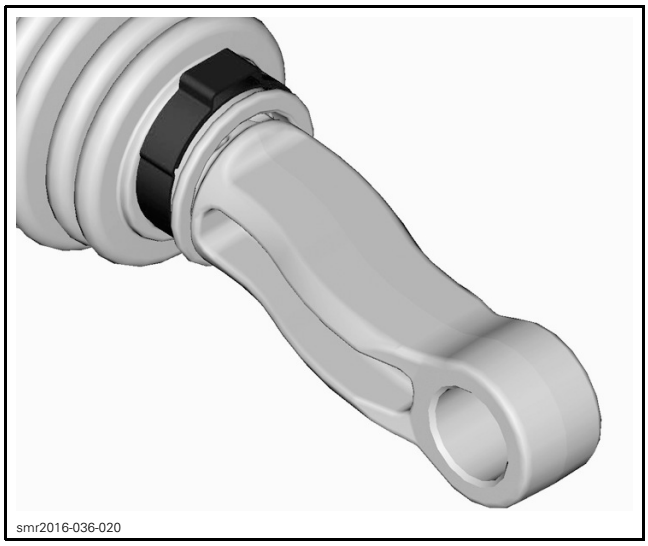
smr2016-036-020

3. Remove connecting arm pin and screw.

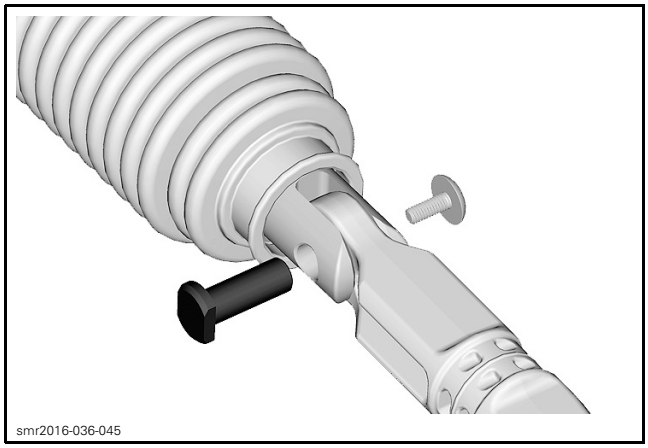
smr2016-036-045

4. Remove connecting arm.

Installing the Connecting Arm

Use iBR overide function to move iBR actuator to the full down setting.

NOTE: The boot should already be installed and clamped on the iBR nut.

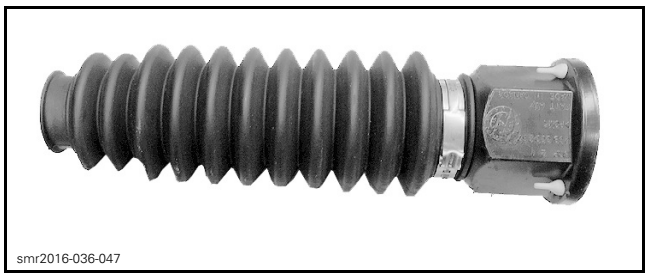
smr2016-036-047

NOTICE **Failure to adhere to the sequence in the following steps will cause the iBR air chamber to rupture or burst and cause premature failure of the iBR actuator.**

1. Push boot back towards iBR actuator.
2. Install connecting arm pin and screw.
   2.1 Torque screw.

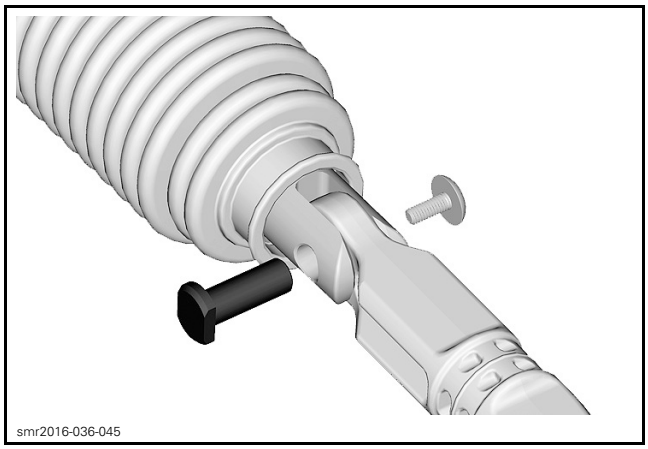
smr2016-036-045

3. Position the boot over the connecting arm.

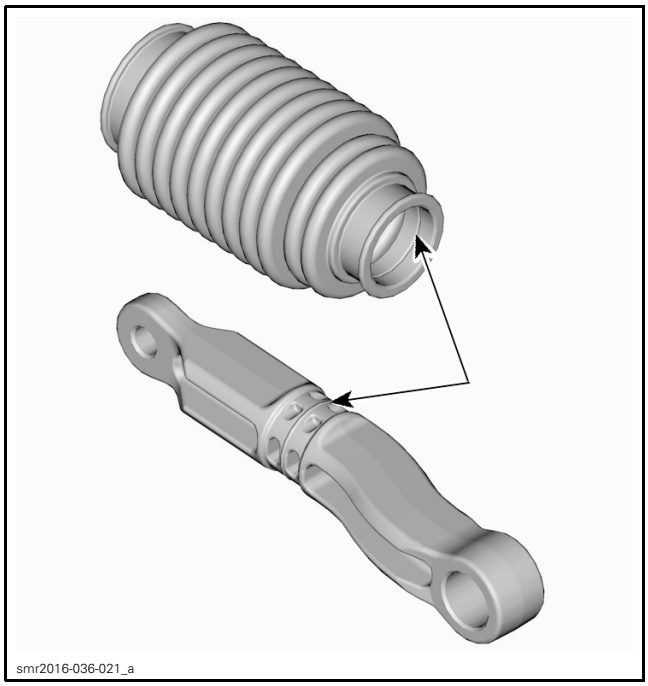
smr2016-036-021_a

4. Compress the air chamber (attached to iBR actuator).
   4.1 Clamp the Oetiker clamp on the connecting arm boot.

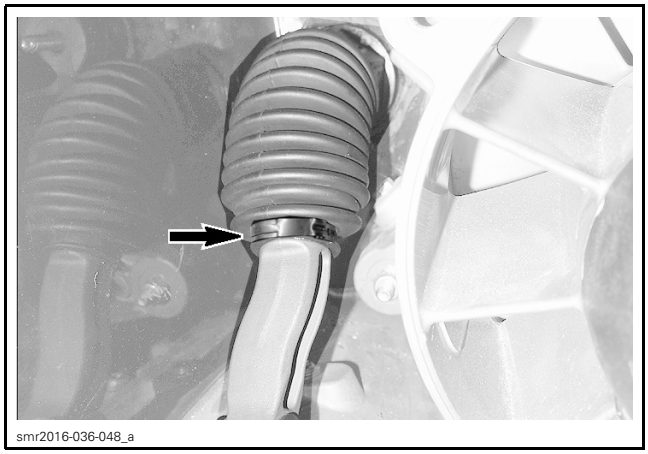
smr2016-036-048_a

Reverse removal procedure.

NOTICE **Allow 24 hours for thread locker on retaining screws to cure.**

Perform *IBR AUTO-CALIBRATION* procedure.

iBR GATE SUPPORT BRACKET

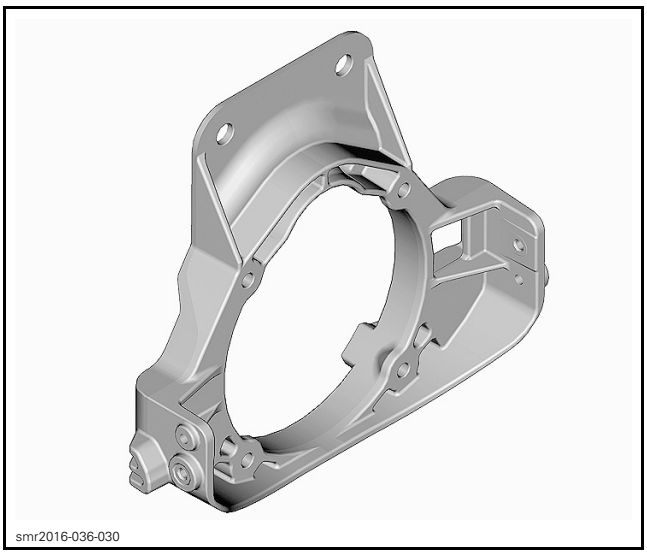
smr2016-036-030

Removing the iBR Gate Support Bracket

Remove the iBR Gate Assembly.

1. Remove the iBR gate.

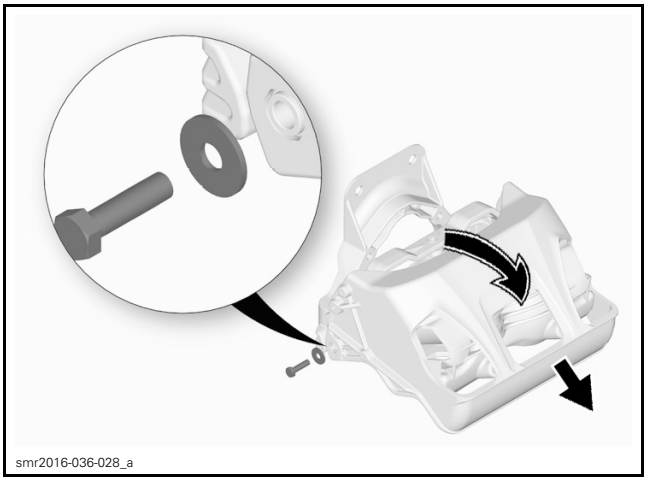
smr2016-036-028_a

2. Remove the trim ring and nozzle assembly.

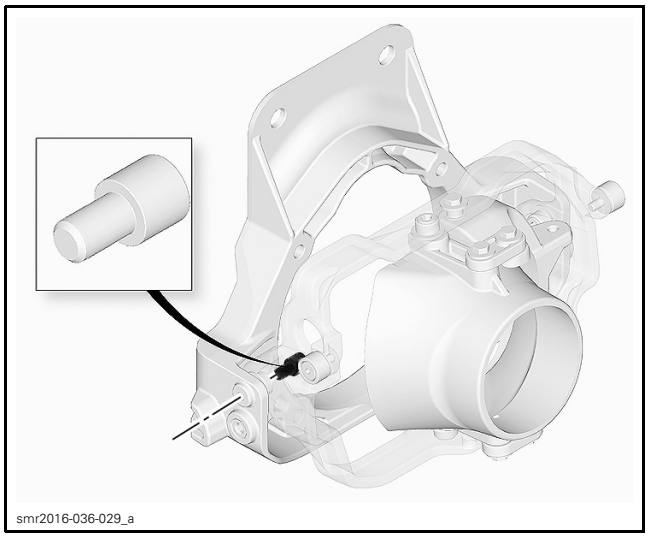
smr2016-036-029_a

Installing the iBR Gate Support Bracket

Reverse removal procedure.

NOTICE **Allow 24 hours for thread locker on retaining screws to cure.**

Perform *IBR AUTO-CALIBRATION* procedure.

L-PLATE

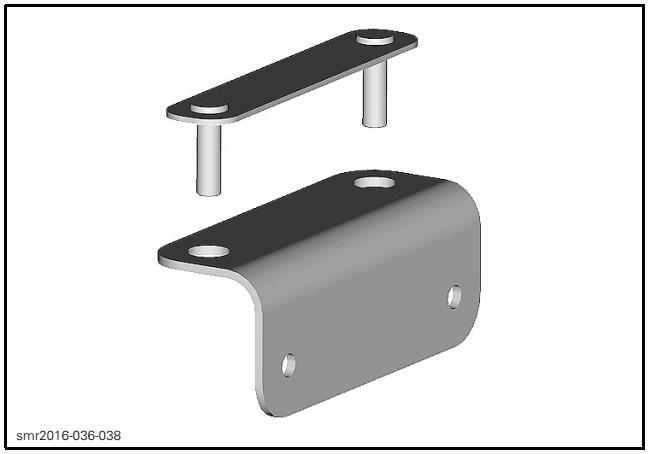
smr2016-036-038

The L plate is pre-aligned from factory. It should not be removed unless it is damaged.

Removing the L-Plate

Remove iBR gate assembly.

Remove L-Plate retaining nuts.

NOTE: The top studs and plate are sealed to the hull. If removed, they must be cleaned and sealed.

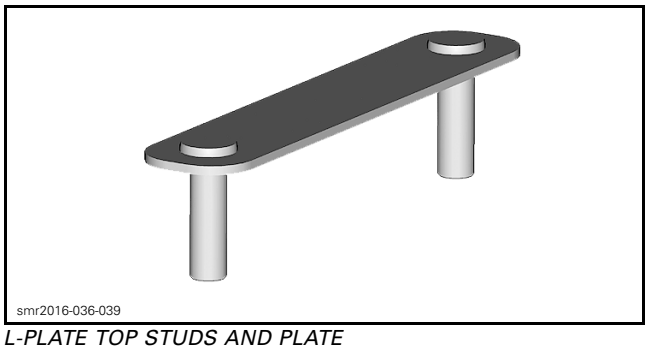
smr2016-036-039

L-PLATE TOP STUDS AND PLATE

Installing the L-Plate

If removed, the top studs and plate must be sealed with LOCTITE 5900 (P/N 293 800 066).

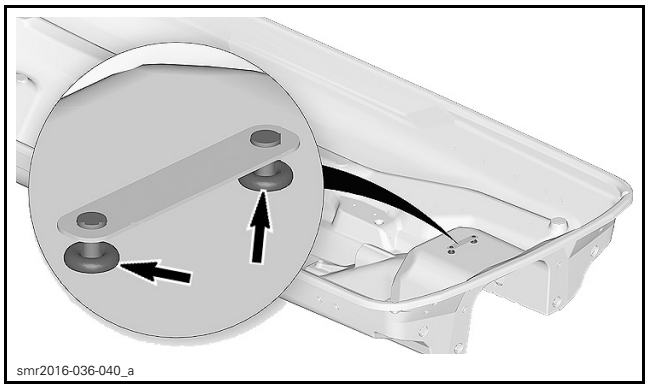
smr2016-036-040_a

1. Loosely install L-plate nuts.

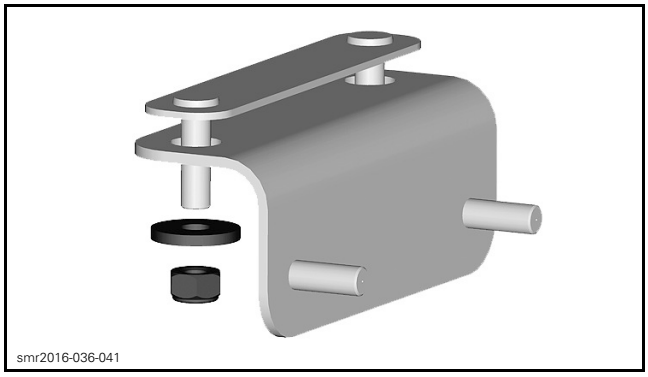
smr2016-036-041

2. Install gate support bracket with the iBR gate assembly and tighten the 4 bolts and 2 nuts.
3. Tighten L-plate nuts.

TIGHTENING SEQUENCE

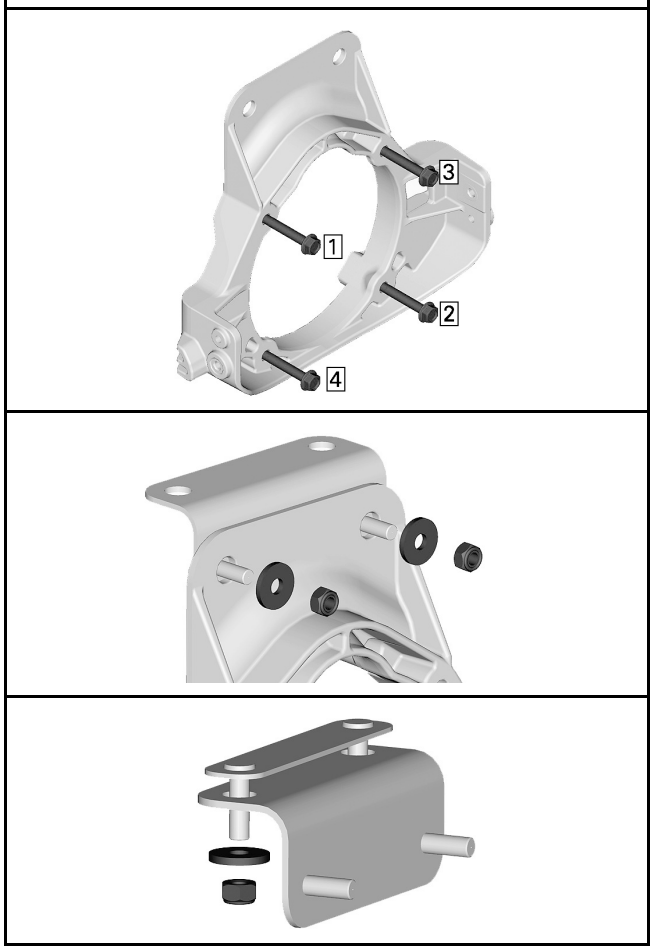

Reverse removal procedure.

NOTICE **Allow 24 hours for thread locker on retaining screws to cure.**

Perform *IBR AUTO-CALIBRATION* procedure.

VTS TRIM RING

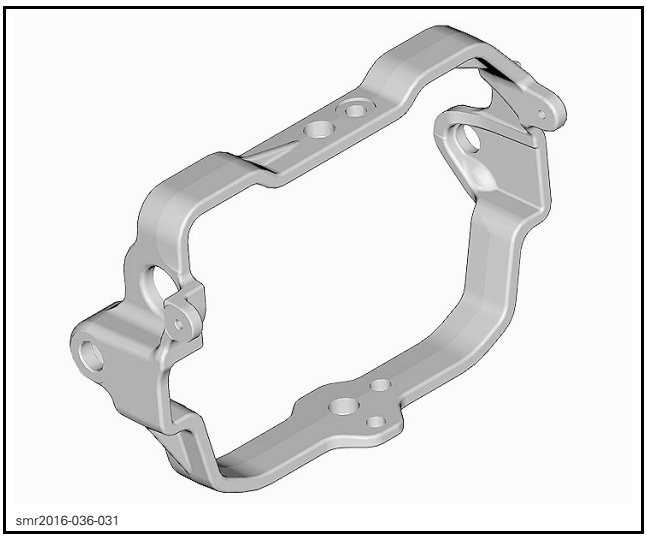
smr2016-036-031

Removing the VTS Trim Ring

1. Remove iBR gate assembly.
2. Remove iBR reverse gate.
3. Remove nozzle pivot screws.

Installing the VTS Trim Ring

Reverse removal procedure.

NOTICE **Allow 24 hours for thread locker on retaining screws to cure.**

Perform *IBR AUTO-CALIBRATION* procedure.

BRAKE AND REVERSE LEVER SWITCH (BRLS)

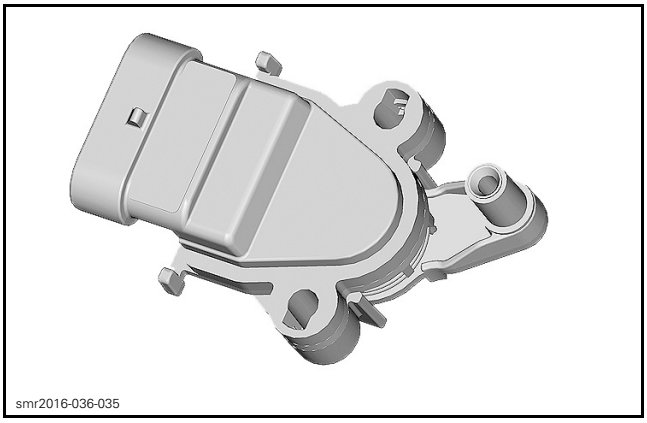
smr2016-036-035

Testing and Specifications

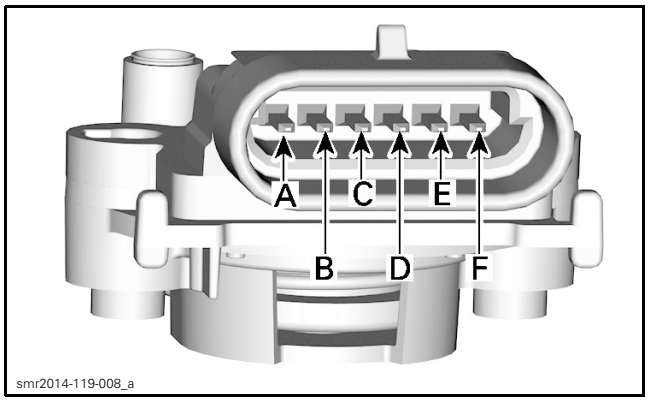

BRLS PINOUT

BRLS PINOUT	
PIN	SIGNAL
BRLS-A	5 VDC
BRLS-B	GND
BRLS-C	View signal % in B.U.D.S.
BRLS-D	5VDC
BRLS-E	GND
BRLS-F	View signal % in B.U.D.S.

NOTE: When moving BRLS lever, the BRLS percentage should increase or decrease in a steady linear fashion.

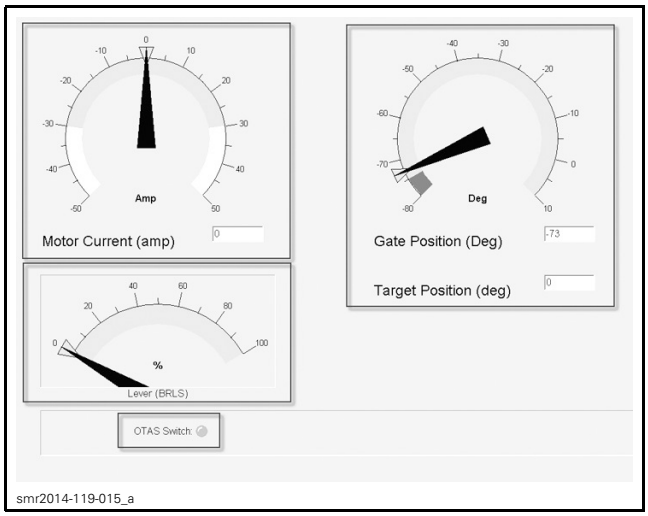

MONITORING iBR IN B.U.D.S.

If B.U.D.S. does not show BRLS percentage moving or if reading is erratic:

– Check for BRLS reference voltage.
– Check for BRLS ground.
– Carry out a continuity test of the wiring between the iBR actuator and the BRLS.

NOTE: When installed on vehicle the BRLS-C Vdc signal should always be half of the BRLS-F Vdc signal when testing with a multimeter.

To test, install DIAGNOSTIC HARNESS (P/N 529 036 188) between steering harness connectors.

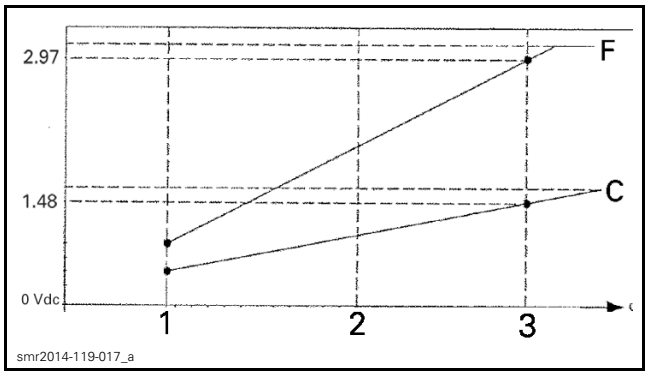

APPROXIMATE BRLS SIGNAL VOLTAGE CURVE PINS F AND C
1. BRLS released
2. BRLS at 50% pulled
3. BRLS fully pulled

Removing the BRLS

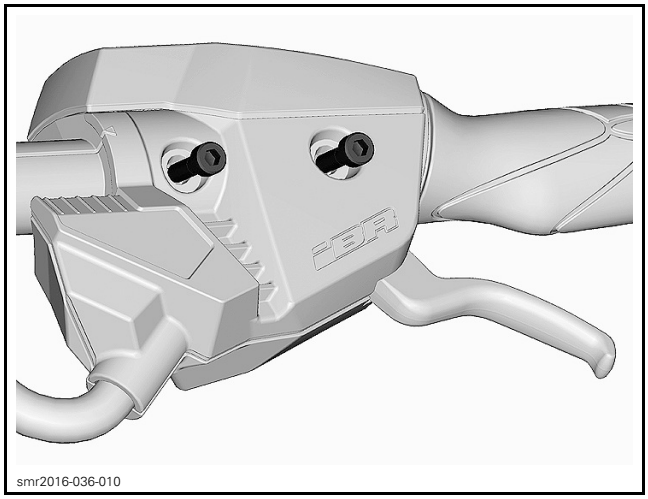

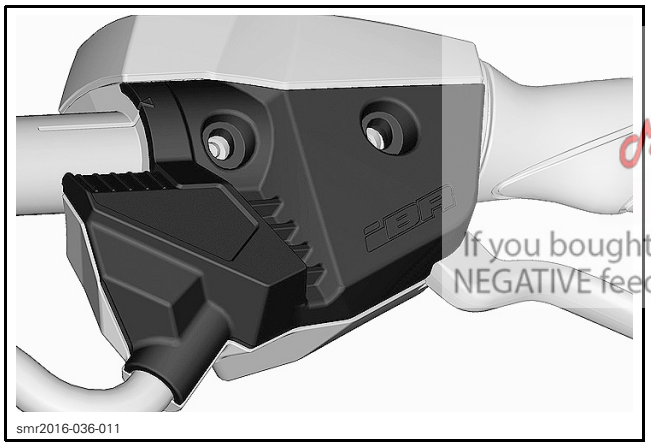
smr2016-036-011

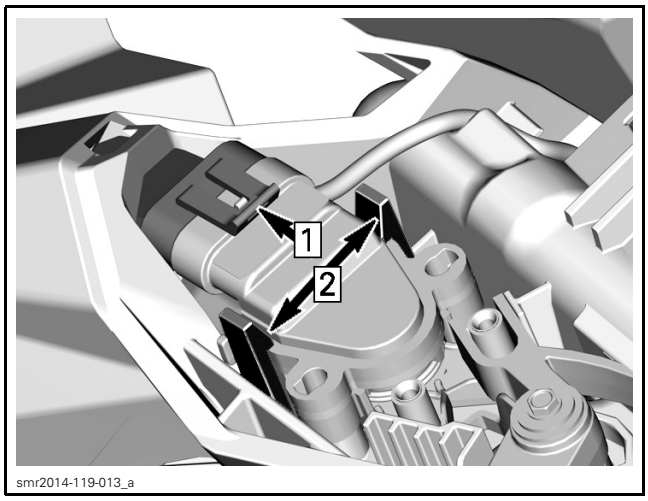

smr2014-119-013_a

Midwest Manuals
Green Manuals
Paperless Manuals
For a Better Tomorrow
If you bought this manual from any other seller please leave them NEGATIVE feedback and notify me at bestshopmanuals@gmail.com

Installing the BRLS

Reverse removal procedure.

TIGHTENING TORQUE	
BRLS Switch Cover Screws	2 N•m ± 1 N•m (18 lbf•**in** ± 9 lbf•**in**)

JET PUMP

SERVICE TOOLS

Description	Part Number	Page
IMPELLER REMOVER/INSTALLER	529 035 956	10–11, 15
IMPELLER SHAFT BEARING TOOL	529 036 168	13–14
IMPELLER SHAFT PUSHER	529 035 955	12–13
PRESSURE CAP	529 036 172	4
PUMP PLATE	529 036 224	5
SEAL/BEARING PUSHER	529 035 819	14
VACUUM/PRESSURE PUMP	529 021 800	4

SERVICE PRODUCTS

Description	Part Number	Page
JET PUMP BEARING GREASE	293 550 032	9, 14, 16
LOCTITE 243 (BLUE)	293 800 060	12
LOCTITE 518	293 800 038	7
LOCTITE 577 (THREAD SEALANT)	293 800 050	11
LOCTITE 767 (ANTISEIZE LUBRICANT)	293 800 070	10
PULLEY FLANGE CLEANER	413 711 809	6
TRIPLE-GUARD GREASE	296 000 329	6–7, 11
XPS LUBE	293 600 016	7, 10

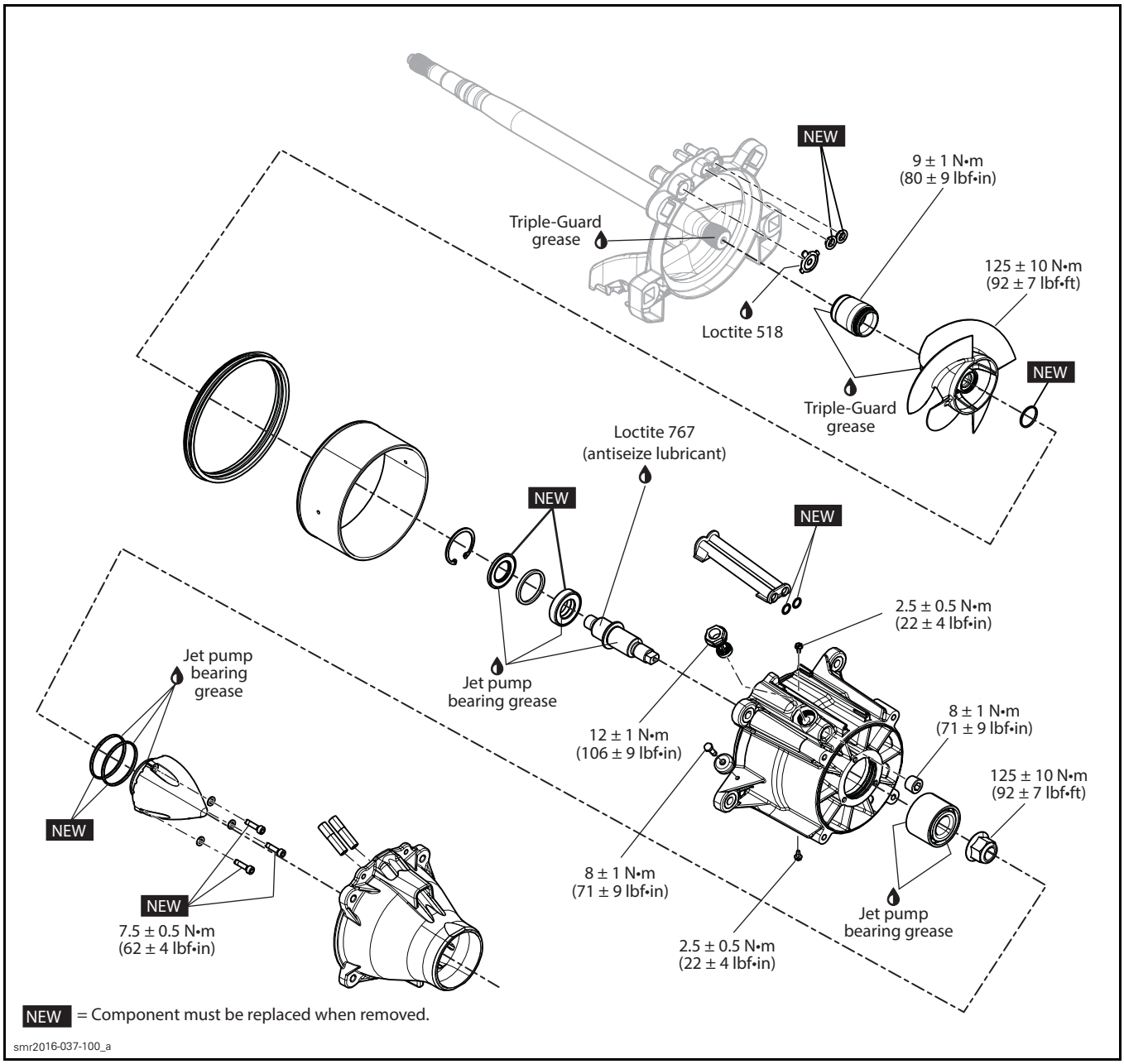
NEW
9 ± 1 N•m
(80 ± 9 lbf•in)
Triple-Guard
grease
125 ± 10 N•m
(92 ± 7 lbf•ft)
Loctite 518
NEW
Triple-Guard
grease
Loctite 767
(antiseize lubricant)
NEW
NEW
2.5 ± 0.5 N•m
(22 ± 4 lbf•in)
Jet pump
bearing
grease
Jet pump
bearing grease
8 ± 1 N•m
(71 ± 9 lbf•in)
12 ± 1 N•m
(106 ± 9 lbf•in)
125 ± 10 N•m
(92 ± 7 lbf•ft)
NEW
8 ± 1 N•m
(71 ± 9 lbf•in)
NEW
7.5 ± 0.5 N•m
(62 ± 4 lbf•in)
Jet pump
bearing grease
2.5 ± 0.5 N•m
(22 ± 4 lbf•in)
NEW = Component must be replaced when removed.
smr2016-037-100_a

GENERAL

JET PUMP MAIN COMPONENTS

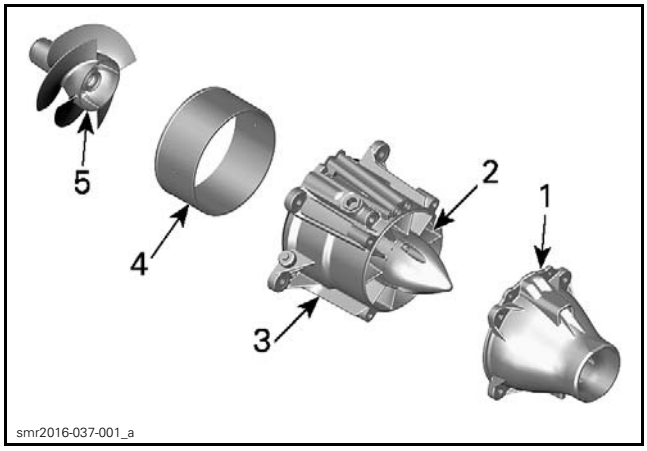

TYPICAL
1. *Venturi*
2. *Stator*
3. *Jet pump housing*
4. *Wear ring*
5. *Impeller*

INSPECTION

IMPELLER CONDITION

Condition of impeller, impeller boot and wear ring can be quickly checked from underneath the watercraft. With the vehicle on the trailer, use a flashlight to visually inspect them through the inlet grate.

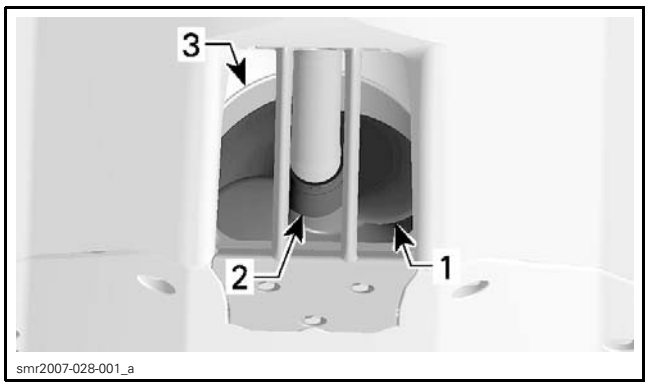

TYPICAL — UNDERNEATH HULL
1. *Impeller*
2. *Impeller boot*
3. *Wear ring*

IMPELLER/WEAR RING CLEARANCE

This clearance is critical for jet pump performance.

To check clearance, remove jet pump.

Using a feeler gauge, measure clearance between impeller blade tip and wear ring. Measure each blade at its center.

MODEL	MAXIMUM WEAR CLEARANCE
All models	0.35 mm (.014 in)

IMPELLER SHAFT RADIAL PLAY

Radial play is critical for jet pump life span.

To check radial play, remove jet pump.

Make sure impeller shaft turns freely and smoothly.

1. Retain housing in a soft jaw vise making sure not to damage housing lug.
2. Set a dial gauge and position its tip onto metal end, close to the end of the impeller hub.
3. Move shaft end up and down. Difference between highest and lowest dial gauge reading is radial play.

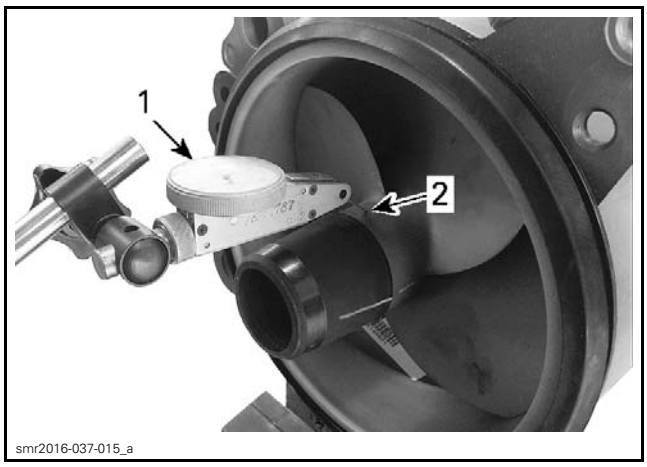

TYPICAL — MEASURING IMPELLER SHAFT RADIAL PLAY
1. *Dial gauge*
2. *Measure close to impeller hub end*

RADIAL PLAY
0.5 mm (.02 in)

Excessive play can come either from worn bearing or damaged jet pump housing bearing surface.

LEAK TEST

Whenever performing any type of repair on the jet pump, a leak test should be carry out.

Proceed as follows:

1. Remove impeller cover. Refer to *IMPELLER COVER* in this subsection.
2. Install the PRESSURE CAP (P/N 529 036 172) on pump housing.

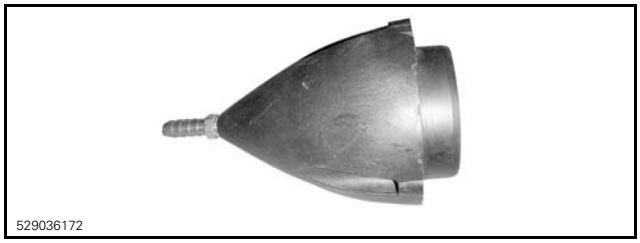

3. Connect the VACUUM/PRESSURE PUMP (P/N 529 021 800) to the pressure cap fitting.

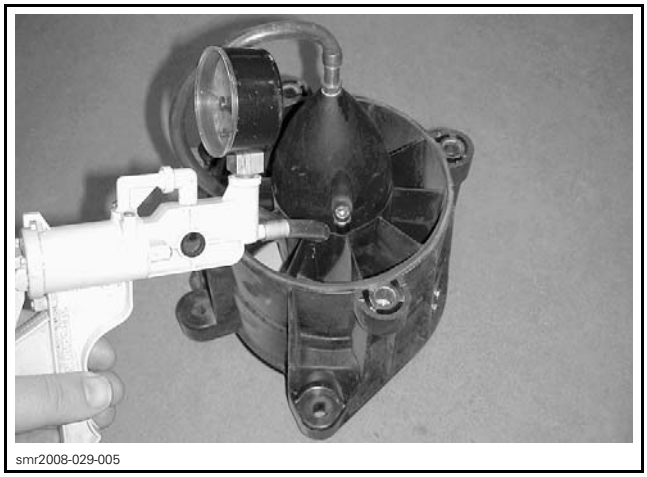

TYPICAL

4. Pressurize pump.

LEAK TEST PRESSURE
Maximum 70 kPa (10 PSI)

5. Pump must maintain this pressure for at least 5 minutes.

NOTE: If there is 2 or 3 bubbles coming out from the seal on the impeller side is acceptable. Leaks from other areas must be repaired.

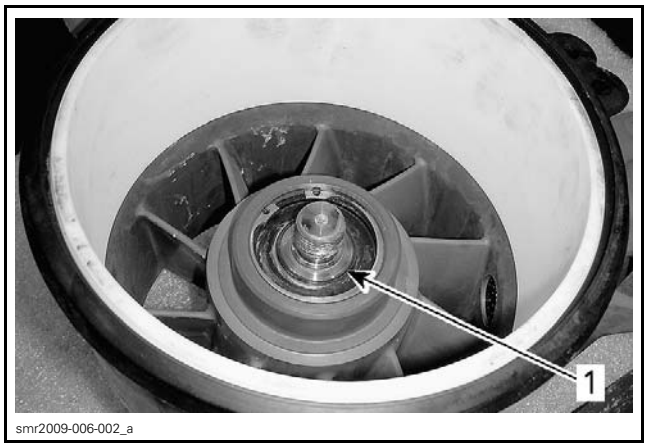

TYPICAL
1. Small leak here is acceptable

NOTICE **Repair any leak. Failure to correct a leak will lead to premature wear of pump components.**

6. Disconnect pump and remove pressure cap.
7. Reinstall impeller cover. Refer to *IMPELLER COVER* in this subsection.

PROCEDURES

NOTE: Whenever removing a part, visually check for damage such as: corrosion, cracks, split, break, porosity, cavitation, deformation, distortion, heating discoloration, wear pattern, defective plating, missing or broken balls in ball bearing, water damage diagnosed by black-colored spots on metal parts, etc. Replace any damaged parts. As a quick check, manually feel clearance and end play, where applicable, to detect excessive wear.

SACRIFICIAL ANODE

Inspecting the Sacrificial Anode

Check for wear. If worn more than half, replace anode.

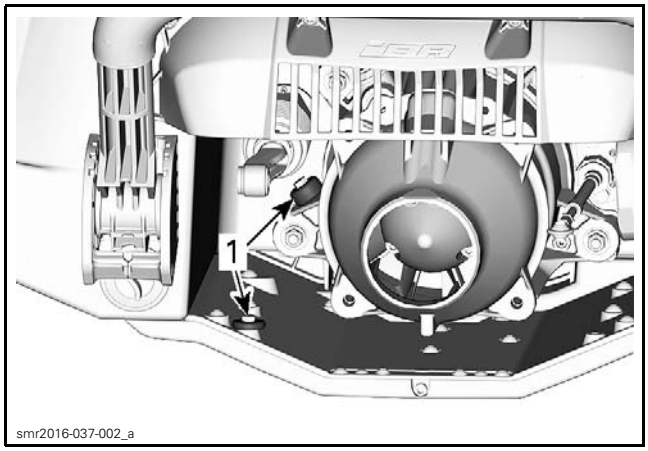

1. Sacrificial anode location

Removing the Sacrificial Anode

Remove and discard screw and anode.

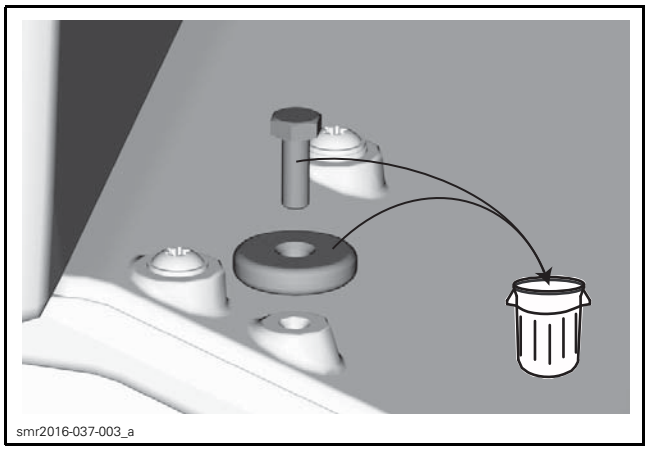

Installing the Sacrificial Anode

Installation is the reverse of the removal procedure.

TIGHTENING TORQUE	
Sacrificial anode screw	8 N•m ± 1 N•m (71 lbf•**in** ± 9 lbf•**in**)

VENTURI

Removing the Venturi

1. Remove the iBR gate, VTS trim ring and nozzle. Refer to *iBR AND VTS* subsection.
2. Remove the venturi from the jet pump housing.

Installing the Venturi

The installation is the reverse of the removal procedure.

JET PUMP HOUSING

Removing the Jet Pump Housing

1. Remove the iBR gate, VTS trim ring and nozzle. Refer to *iBR AND VTS* subsection.
2. Remove the venturi.
3. Remove and discard the nuts that retain the jet pump to the pump support.

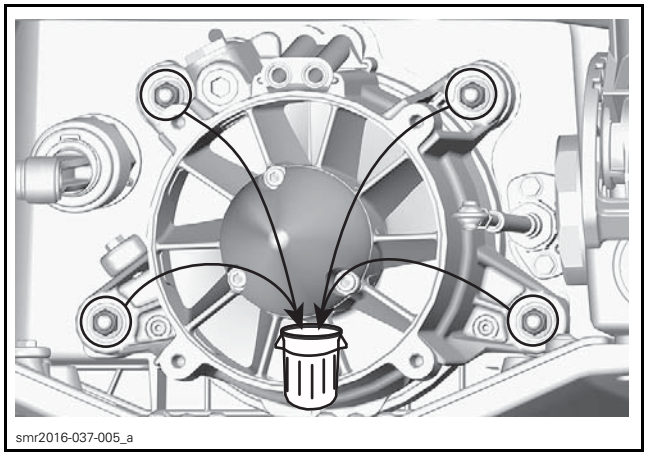

4. Pull back jet pump housing to remove it from the pump support. It may be necessary to wiggle it slightly as you pull back on the pump.

Temporarily fasten the PUMP PLATE (P/N 529 036 224) to pump support to support drive shaft and avoid PTO oil seal damage.

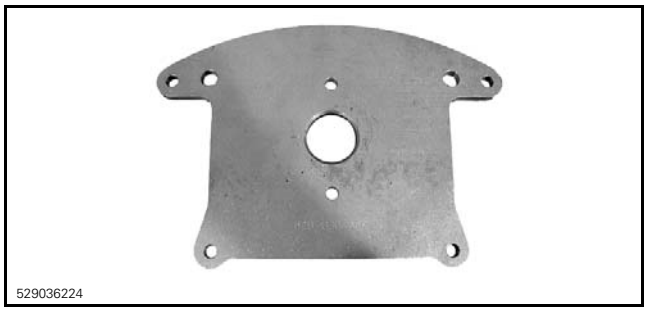

Inspecting and Cleaning the Jet Pump Housing

1. Visually inspect jet pump housing. Pay attention to the stator. Ensure the assembly is clean and free of any debris and defects.

Do the following as applicable.

2. Blow low pressure compressed air through the pressure outlet fitting and make sure it is clear.

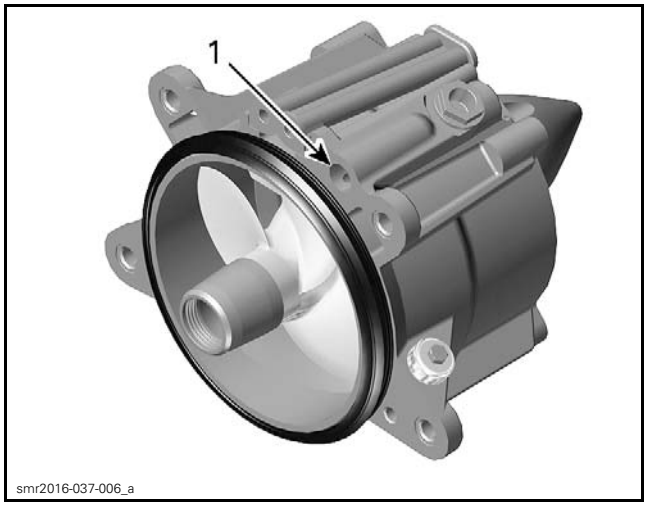

1. Pressure outlet

3. Ensure cap screw is tight.
4. Ensure the neoprene seal is in good condition. Replace as required.

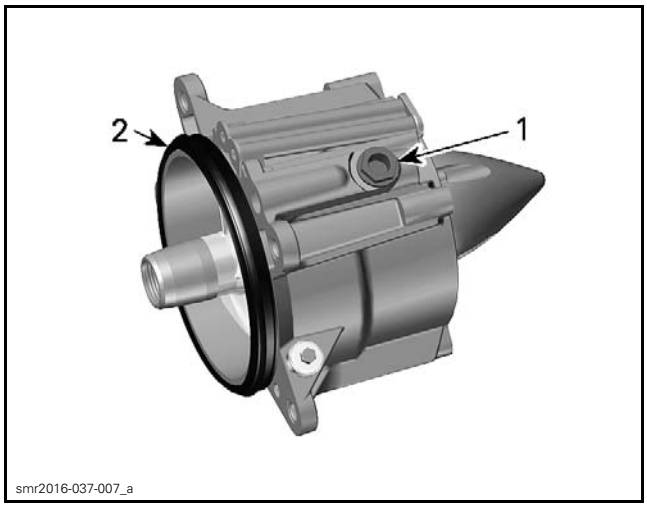

1. Cap screw
2. Neoprene seal

Installing the Jet Pump Housing

Clean impeller splines and drive shaft splines with PULLEY FLANGE CLEANER (P/N 413 711 809) or equivalent. Splines must be free of any residue.

NOTICE **To avoid damaging the drive shaft finish, never use a metallic brush.**

Lubricate drive shaft splines, impeller splines and the inside of the impeller boot with TRIPLE-GUARD GREASE (P/N 296 000 329).

Ensure the neoprene seal is properly installed on the jet pump.

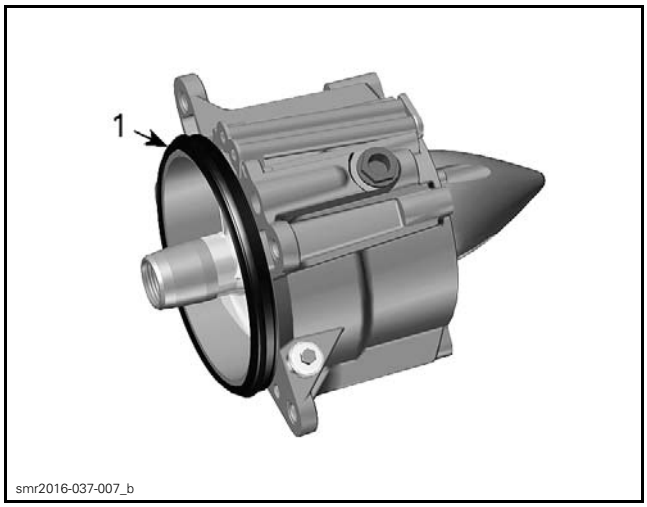

1. Neoprene seal

Install new O-rings then slide water outlet adapter onto pump.

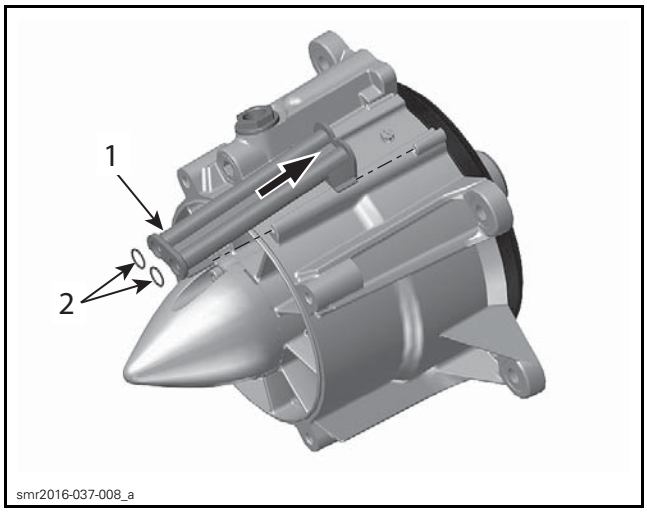

1. Slide adapter onto pump
2. New O-rings here

Install new O-rings on pump support.

The water flow is controlled by a calibrated reducer. Ensure to install the proper reducer.

Apply a thin layer of LOCTITE 518 (P/N 293 800 038) on the rounded portion of the reducer to hold it against the support.

REDUCER	
ENGINE	COLOR CODE
300	Pink
All other	Green

NOTICE **Improper reducer can cause overheating and damage to exhaust system.**

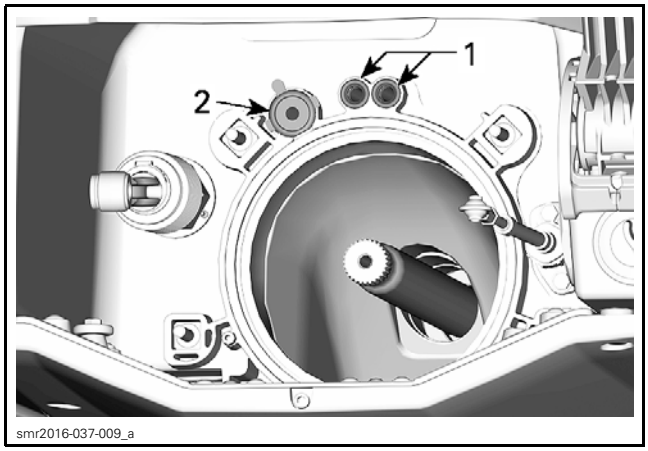

1. Install new O-rings
2. Calibrated reducer

Generously apply TRIPLE-GUARD GREASE (P/N 296 000 329) on drive shaft splines.

Install jet pump.

NOTE: If necessary, wiggle jet pump to engage drive shaft splines in impeller.

Install new nuts and torque as per table and the illustrated sequence.

TIGHTENING TORQUE
26 N•m ± 2 N•m (19 lbf•ft ± 1 lbf•ft)

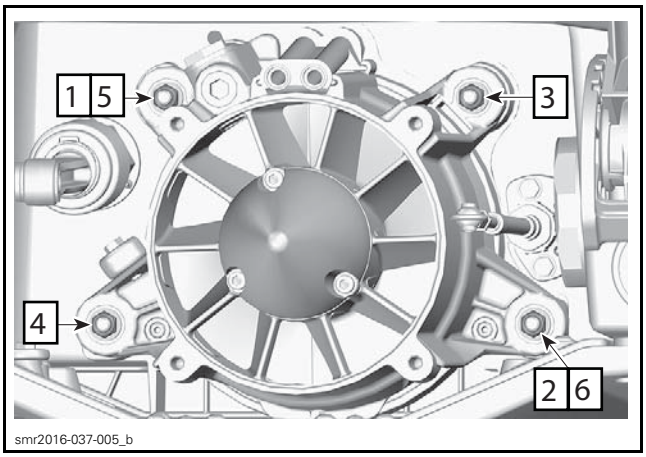

NOTE: Slightly lubricate wear ring with XPS LUBE (P/N 293 600 016) to minimize friction during initial impeller start.

IMPELLER COVER

Removing the Impeller Cover

1. Remove the jet pump housing.
2. With pump housing in vertical position, remove and discard the 3 retaining screws.

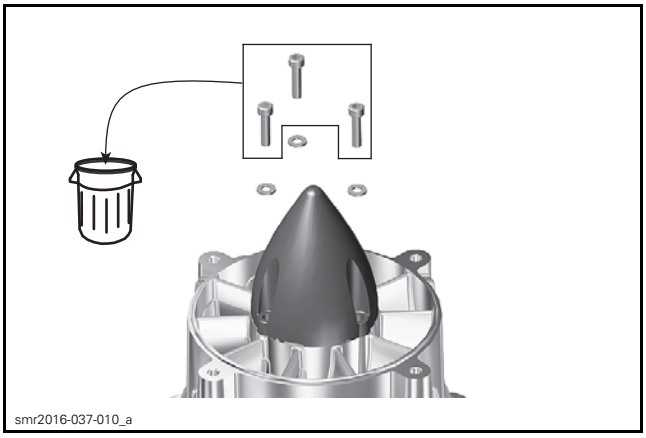

3. Using a fiber hammer, gently tap impeller cover to help release it from the jet pump housing.
4. Use a flat screwdriver in the slots provided as pry points to remove it from the jet pump housing.

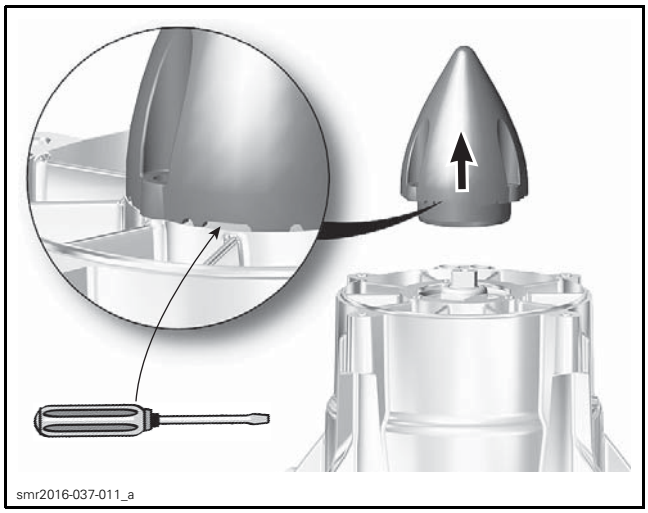
smr2016-037-011_a

5. Remove both cover O-rings.

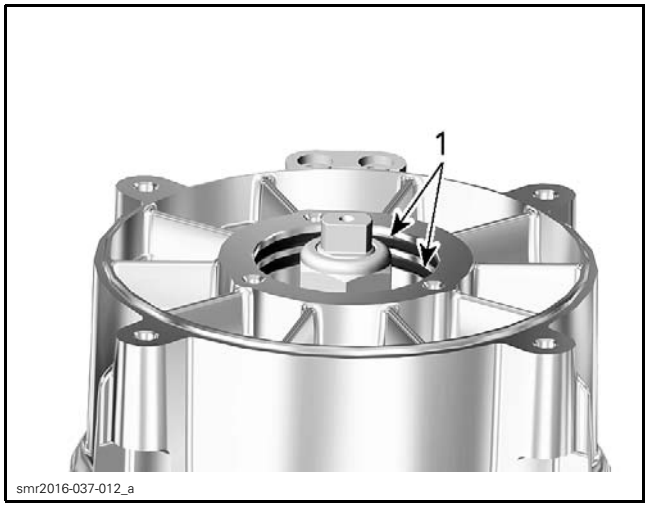

smr2016-037-012_a

1. *Cover O-rings*

Inspecting the Impeller Cover

Check for presence of water in cover and bearing area. If water is found, replace seals on impeller side. Also replace O-rings and/or impeller cover.

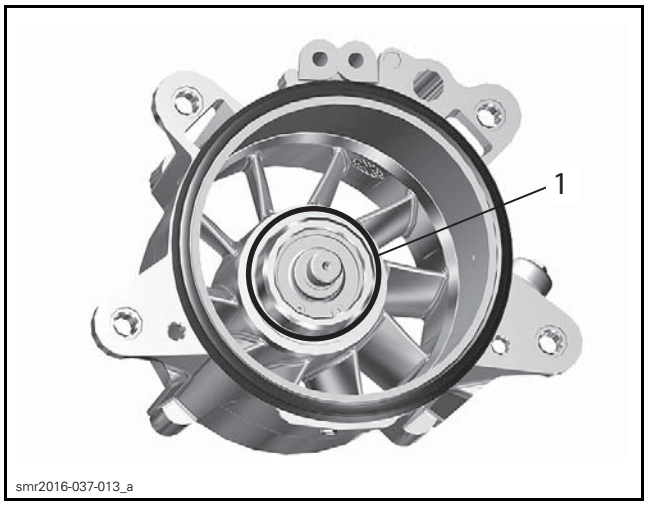

smr2016-037-013_a

1. *Seal on impeller side*

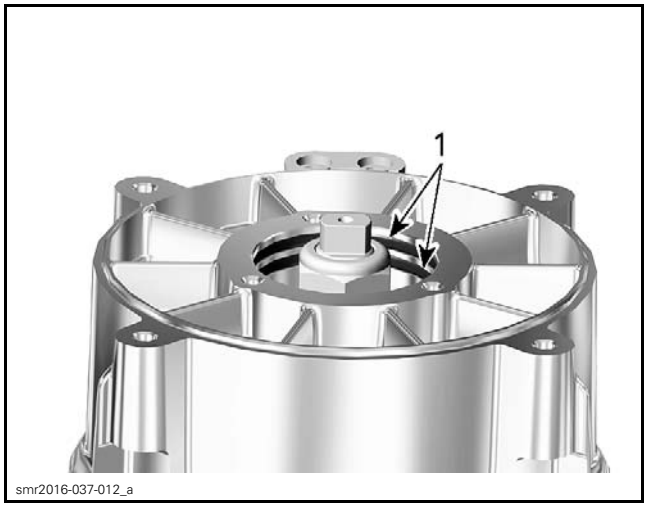

smr2016-037-012_a

1. *Cover O-rings*

Check impeller boot and O-rings condition on impeller. Replace as required.

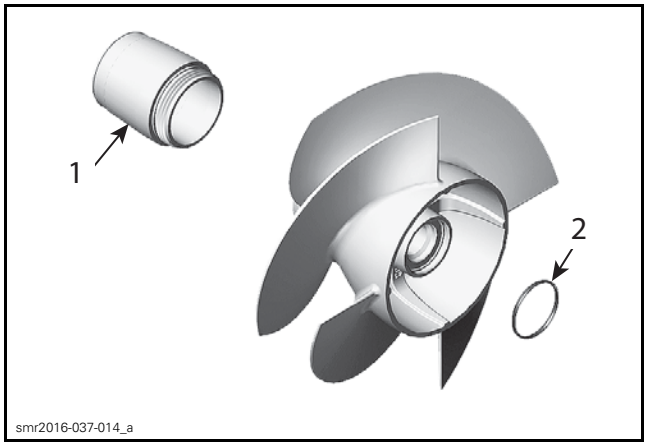

smr2016-037-014_a

1. *Impeller boot*
2. *Impeller O-ring*

Perform a leak test. Refer to *LEAK TEST* in this subsection.

Installing the Impeller Cover

1. Apply a thin layer of JET PUMP BEARING GREASE (P/N 293 550 032) in O-ring grooves.
2. Install O-rings in their respective groove and make sure they are properly lubricate..

TYPICAL

3. Install impeller cover by aligning the cover index mark with the pump top fin as shown.

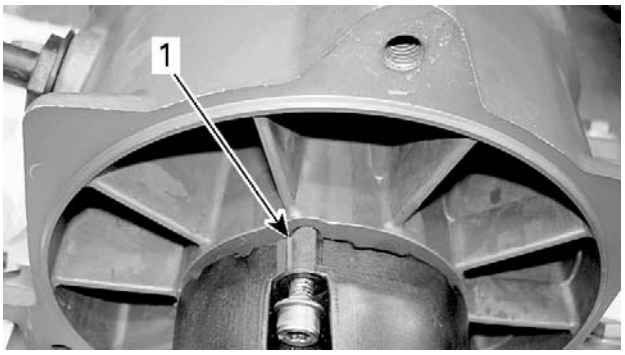

1. Align mark with top fin

NOTE: Cover can only be installed in one position as screw holes are not located symmetrically.

4. Secure cover with NEW self-locking screws.

NOTE: Push cover against pump housing while alternately tightening screws. Make sure O-rings are positioned correctly and they are not damaged when pushing the cover.

TIGHTENING TORQUE	
Cover screw	7.5 N•m ± 0.5 N•m (66 lbf•**in** ± 4 lbf•**in**)

IMPELLER

Removing the Impeller

NOTE: If impeller shaft is to be disassembled, loosen the impeller shaft nut prior to removing the impeller.

1. Remove jet pump housing. Refer to *JET PUMP HOUSING* in this subsection.
2. Remove impeller cover. Refer to *IMPELLER COVER* in this subsection.
3. Remove impeller boot by turning it **clockwise** (LH threads).

TYPICAL
1. Unscrew **clockwise**

4. Mount the flat sides of impeller shaft in a vise.

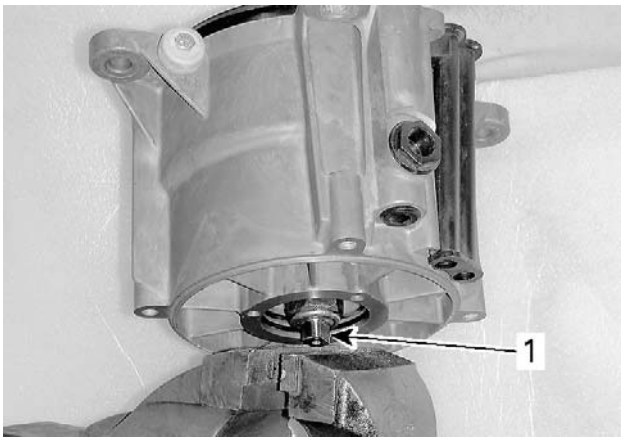

TYPICAL
1. Flat side

5. Unscrew the impeller counterclockwise using the required tool.

REQUIRED TOOL
IMPELLER REMOVER/INSTALLER (P/N 529 035 956)

TYPICAL

NOTICE Never use an impact wrench to loosen impeller.

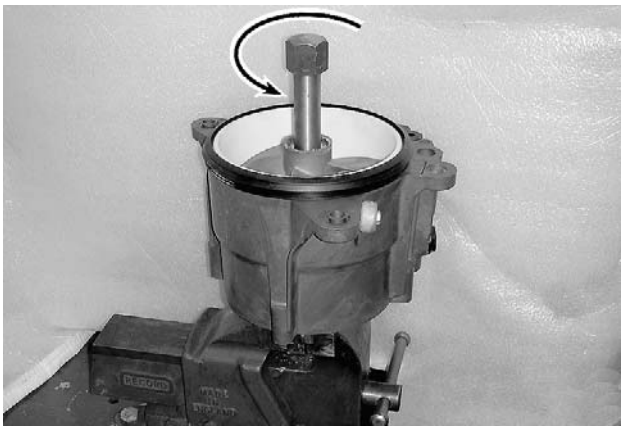

TYPICAL

6. To pull impeller out of the pump, apply a rotating movement as you pull on the impeller.

Installing the Impeller

1. Mount the flat sides of the impeller shaft in a vise.

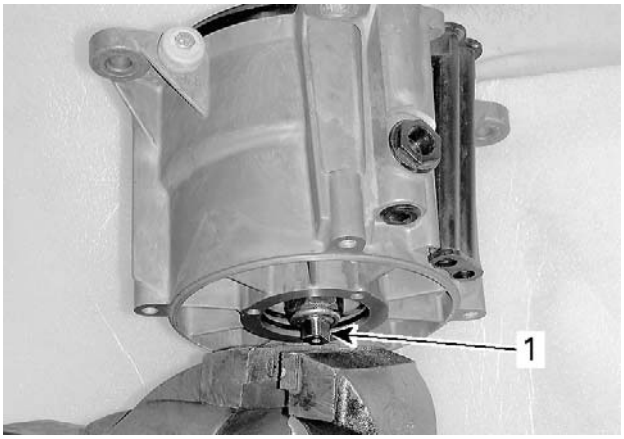

TYPICAL
1. Flat side

2. Apply LOCTITE 767 (ANTISEIZE LUBRICANT) (P/N 293 800 070) on threads of impeller shaft.

TYPICAL
1. Antiseize lubricant

3. Apply XPS LUBE (P/N 293 600 016) on the wear ring surface.

TYPICAL
1. Spray XPS lube on this surface

4. Start screwing the impeller on its shaft.

TYPICAL

5. Mount the required tool in impeller splines.

REQUIRED TOOL
IMPELLER REMOVER/INSTALLER (P/N 529 035 956)

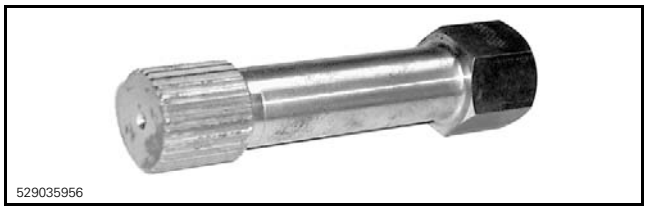

TYPICAL

6. Torque impeller as per table.

NOTICE **Never use an impact wrench to tighten impeller shaft.**

TIGHTENING TORQUE
125 N•m ± 10 N•m (92 lbf•ft ± 7 lbf•ft)

Remove tool.

7. Apply LOCTITE 577 (THREAD SEALANT) (P/N 293 800 050) on impeller boot threads.
8. Apply TRIPLE-GUARD GREASE (P/N 296 000 329) inside impeller boot.
9. Install impeller boot on impeller and tighten **counterclockwise**.

WEAR RING

Inspecting the Wear Ring

Check wear ring for:

– Deep scratches
– Irregular surface
– Any apparent damage.

Check *IMPELLER/WEAR RING CLEARANCE*, see procedure at the beginning of this subsection.

Removing the Wear Ring

1. Remove jet pump housing. Refer to *JET PUMP HOUSING* in this subsection.
2. Remove impeller, refer to *IMPELLER* in this subsection.
3. **On models equipped with the 1600 4-TEC engine**, remove screws securing the wear ring.

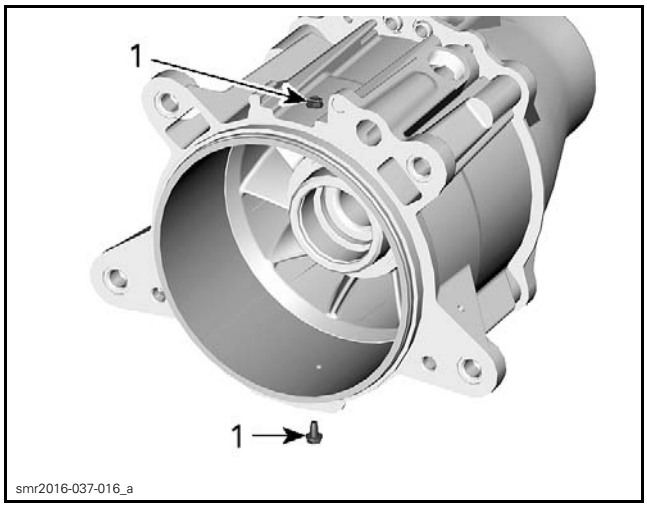

1. *Wear ring screws*

Two methods can be used to remove the wear ring, use the most appropriate as your situation.

Method Using a Freezer

1. Place the jet pump housing and the new wear ring in a freezer for approximately 1-1/2 hour at -10°C (14°F).
2. Remove the housing from the freezer and pull the wear ring out.

Method by Cutting the Wear Ring

1. Place jet pump housing in a vise with soft jaws. It is best to clamp housing using a lower ear.
2. Cut wear ring at two places.

NOTICE **When cutting ring, be careful not to damage jet pump housing.**

NOTE: Wear ring can be cut using a jigsaw, a small grinder or a low clearance hacksaw.

3. After cutting ring, insert a screwdriver blade between jet pump housing and ring outside diameter.
4. Push ring so that it can collapse internally.
5. Pull ring out.

Installing the Wear Ring

Like the removing procedure, two methods can be used to install the wear ring, use the most appropriate as your situation.

Method Using a Freezer

While the housing is still cold, insert the new wear ring (previously place in the freezer) in the housing.

On models equipped with the 1600 4-TEC engine, the wear ring must be secured by screws. Drill pilot holes in the wear ring using a #24 drill bit (5/32 in) and apply LOCTITE 243 (BLUE) (P/N 293 800 060) on screw threads.

TIGHTENING TORQUE	
Wear ring screws	2.5 N•m ± 0.5 N•m (22 lbf•**in** ± 4 lbf•**in**)

Method Using a Press

To install wear ring in housing, use a square steel plate of approximately 180 x 180 mm x 6 mm thick (7 x 7 in x 1/4 in) and a press.

Manually engage ring in housing making sure it is equally inserted all around. Press ring until it seats into bottom of housing.

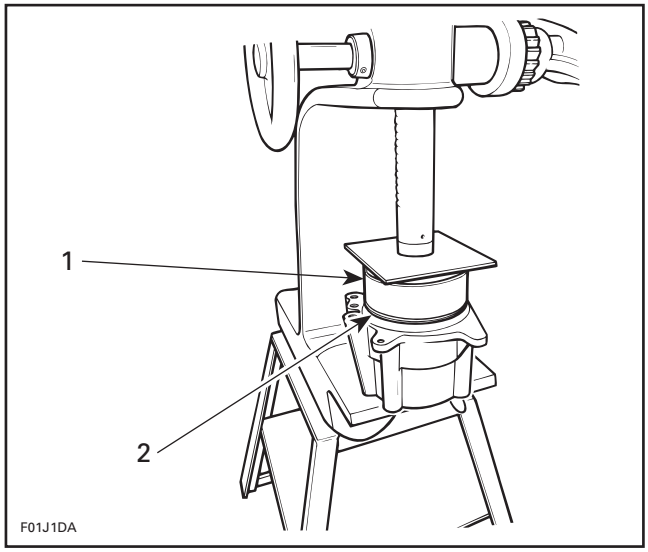

1. *Rounded edge*
2. *Press wear ring*

On models equipped with the 1600 4-TEC engine, the wear ring must be secured by screws. Drill pilot holes in the wear ring using a #24 drill bit (5/32 in) and apply LOCTITE 243 (BLUE) (P/N 293 800 060) on screw threads.

TIGHTENING TORQUE	
Wear ring screws	2.5 N•m ± 0.5 N•m (22 lbf•**in** ± 4 lbf•**in**)

IMPELLER SHAFT, BEARING AND SEALS

Removing the Impeller Shaft, Bearing and Seals

Removing the Shaft

1. Remove impeller. Refer to *IMPELLER* in this subsection.
2. Use the IMPELLER SHAFT PUSHER (P/N 529 035 955) to press impeller shaft out of pump housing.

NOTE: Bearing will come out with the impeller shaft.

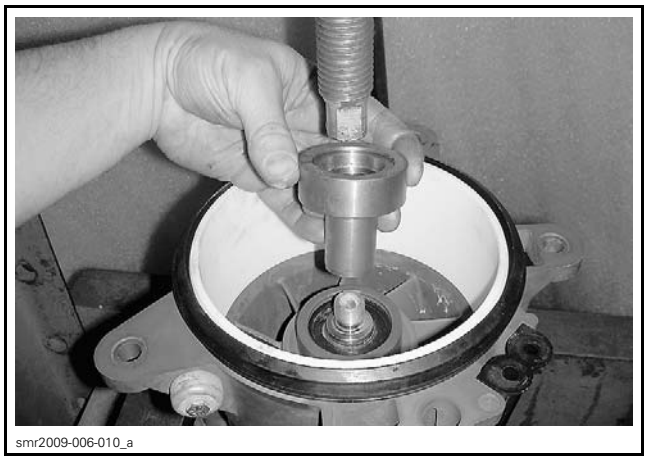

TYPICAL

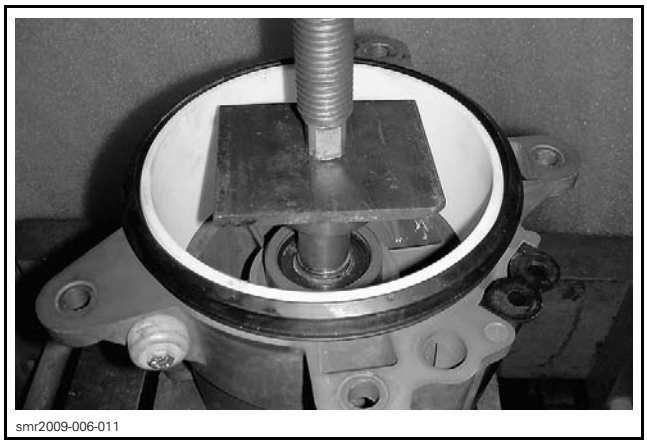

TYPICAL

Removing the Bearing

1. Use the IMPELLER SHAFT BEARING TOOL (P/N 529 036 168) to press bearing off impeller shaft.

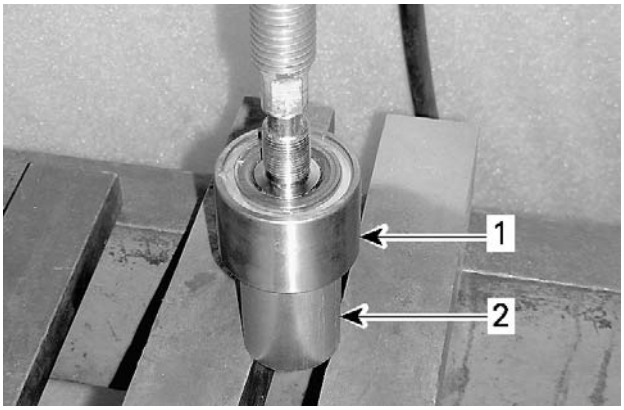

smr2009-006-012_a

TYPICAL
1. *Impeller shaft and bearing*
2. *Bearing tool on INNER race*

Removing The Seals

1. Remove and discard the circlip securing the seals.

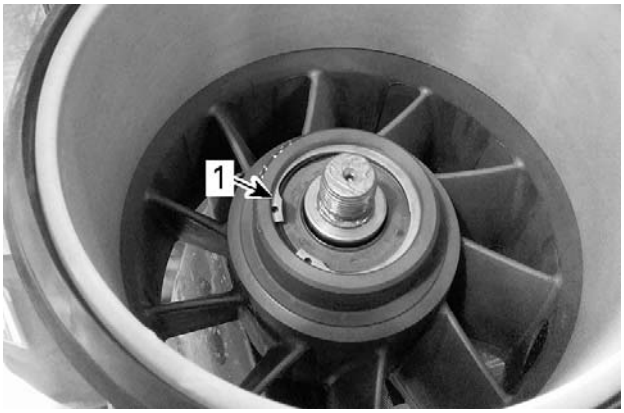

smr2016-037-017_a

1. *Circlip*

2. Using an appropriate tool, press seals out of the housing.

Inspecting the Impeller Shaft and its Bearing

With your finger nail, feel seal lip contact surface on shaft. If any irregular surface is found, replace shaft and seals.

Check condition of shaft threads.

smr2009-006-019_a

TYPICAL
1. *Threads*
2. *Seal lip contact surface*
3. *Threads*

Inspect ball bearing for corrosion.

Installing the Impeller Shaft, Bearing and Seals

Installing the Bearing

The installation is essentially the reverse of the removal procedure. However, pay attention to the following.

1. Using the IMPELLER SHAFT BEARING TOOL (P/N 529 036 168) on the bearing inner race, press the bearing on the impeller shaft.
2. Use the IMPELLER SHAFT PUSHER (P/N 529 035 955) to protect the impeller shaft threads.

NOTE: The bearing can be installed in either direction.

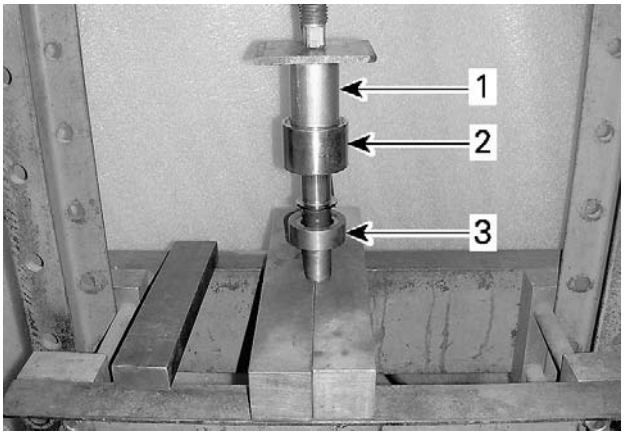

smr2009-006-013_a

TYPICAL
1. *Impeller shaft bearing tool on INNER race*
2. *Impeller shaft and bearing*
3. *Impeller shaft installer/pusher tool*

3. Press bearing until it bottoms.

Installing the Impeller Shaft and Seals

NOTE: Ensure there is no O-ring in pump housing on the cover side.

1. From the outlet side of pump, press impeller shaft assembly into housing using the IMPELLER SHAFT BEARING TOOL (P/N 529 036 168).

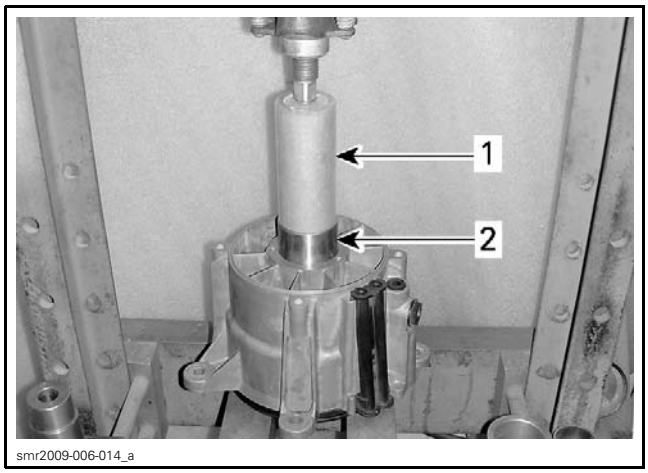

TYPICAL
1. Bearing tool
2. Impeller shaft and bearing

2. Press bearing until it bottoms.

NOTE: Ensure impeller shaft turns freely and smoothly.

3. Turn pump upside down.
4. Coat shaft surface with JET PUMP BEARING GREASE (P/N 293 550 032).
5. Install O-ring at bottom.

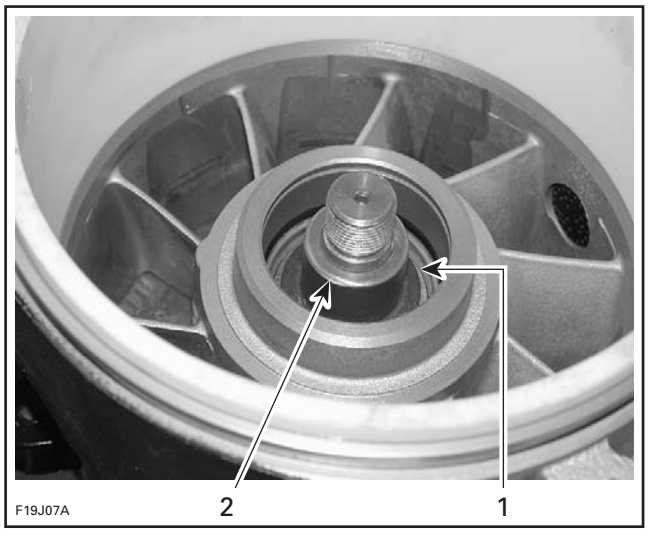

TYPICAL
1. O-ring at bottom
2. Coat surface

6. Apply 4 ml (.1 U.S. oz) of JET PUMP BEARING GREASE (P/N 293 550 032) on bearing.

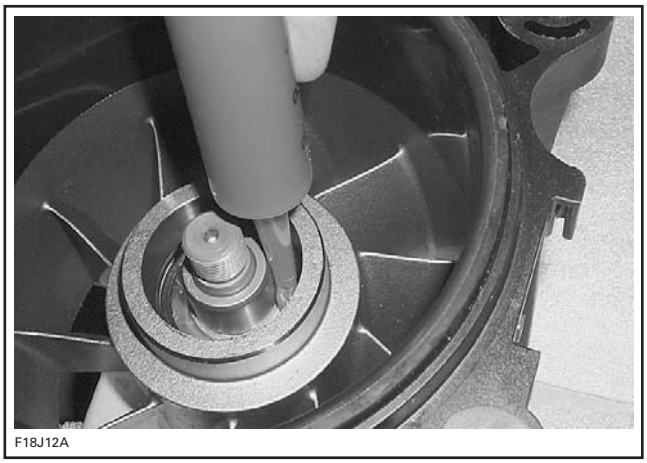

TYPICAL

7. Press a **NEW** double lip seal using the SEAL/BEARING PUSHER (P/N 529 035 819) until seal bottoms. Make sure seal lip are facing upwards.

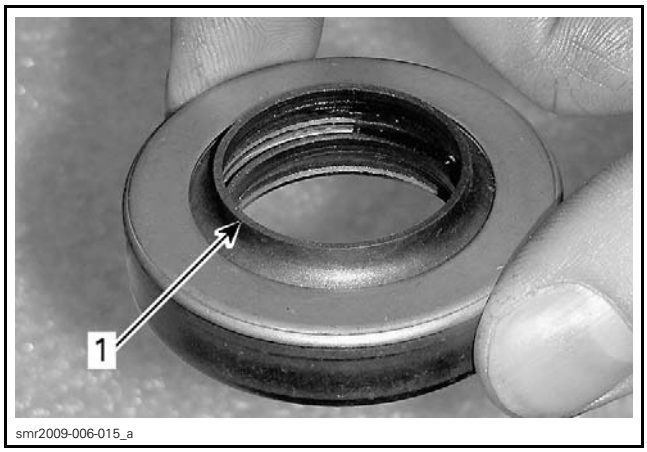

1. Seal lip up

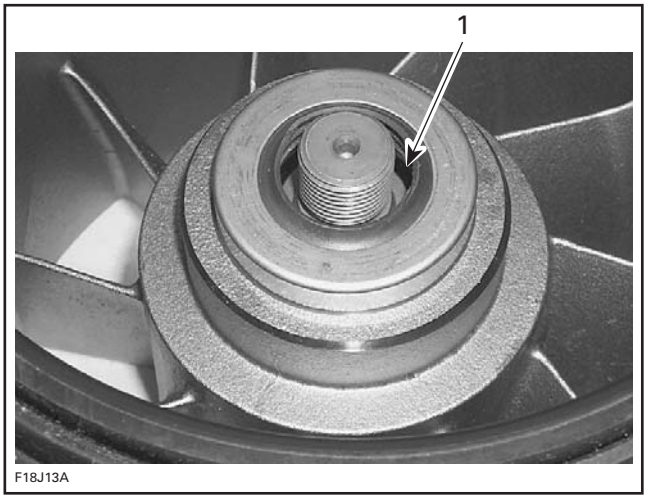

1. Seal lip facing up

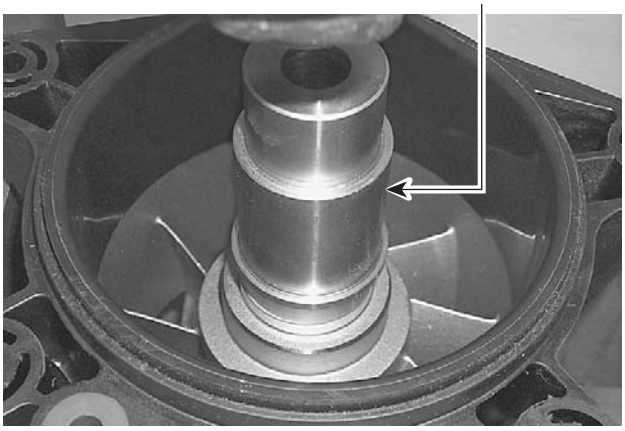

TYPICAL
1. Seal/bearing pusher

8. Install spacer and then the other seal (thin). Ensure seal lip is facing up.

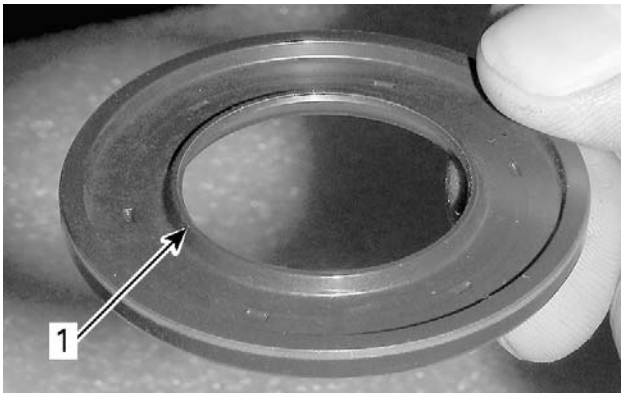

1. Seal lip facing up

9. Install circlip.

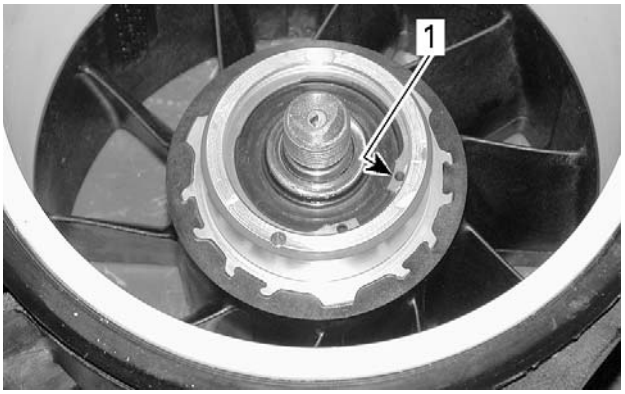

TYPICAL
1. Circlip

10. Turn pump upside down.

11. Before installing any other parts, pressurize jet pump to insure proper seal installation. Refer to *LEAK TEST* in this subsection.
12. Install impeller. Refer to *IMPELLER* in this subsection.
13. Mount in a vise the impeller remover/installer.

REQUIRED TOOL
IMPELLER REMOVER/INSTALLER (P/N 529 035 956)

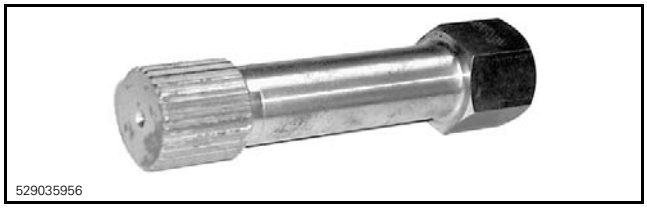

TYPICAL

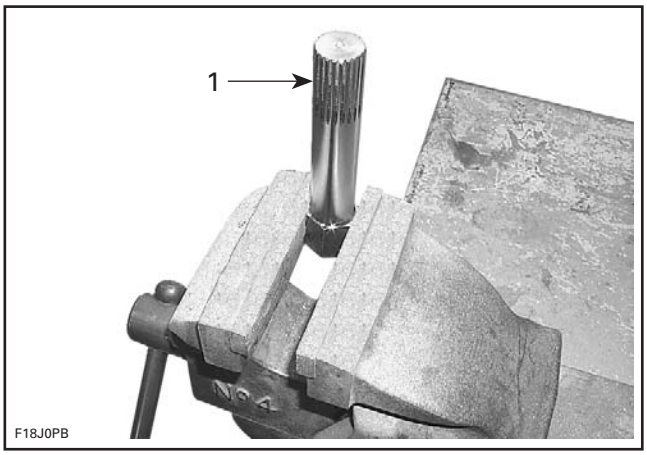

1. Impeller remover/installer tool

14. Install jet pump housing over this tool.

TYPICAL

15. Using a 30 mm socket, screw the impeller shaft nut on clockwise.
16. Torque nut as specified in exploded view.

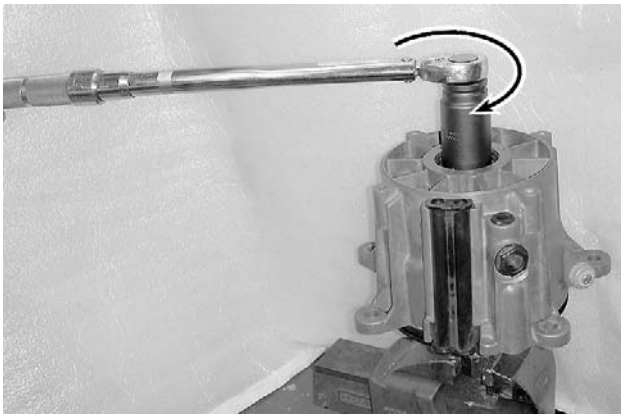

smr2009-006-009_b

17. Apply 26 ml (.9 U.S. oz) of JET PUMP BEARING GREASE (P/N 293 550 032) on the bearing (nut side) and in O-ring grooves.

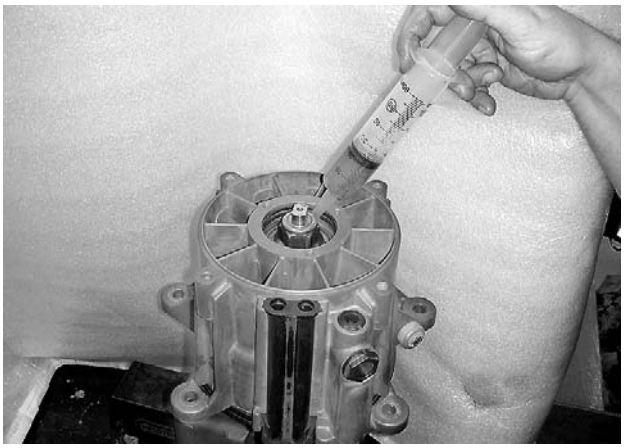

smr2009-006-018

18. Install the two O-rings in pump housing and make sure they are properly lubricated..

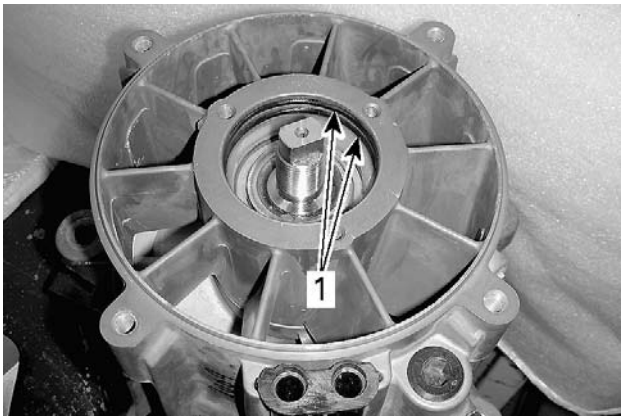

smr2009-006-017_a

TYPICAL
1. O-rings

19. Install the impeller cover. Refer to *IMPELLER COVER* in this subsection.

DRIVE SHAFT

SERVICE TOOLS

Description	Part Number	Page
DRIVE SHAFT C-CLIP REMOVER	529 036 026	2
FLOATING RING TOOL (TYPE II)	529 036 116	2
PTO SUPPORT TOOL	529 035 842	3, 6

SERVICE PRODUCTS

Description	Part Number	Page
PULLEY FLANGE CLEANER	413 711 809	4
XPS LUBE	293 600 016	3
XPS SYNTHETIC GREASE	293 550 010	6

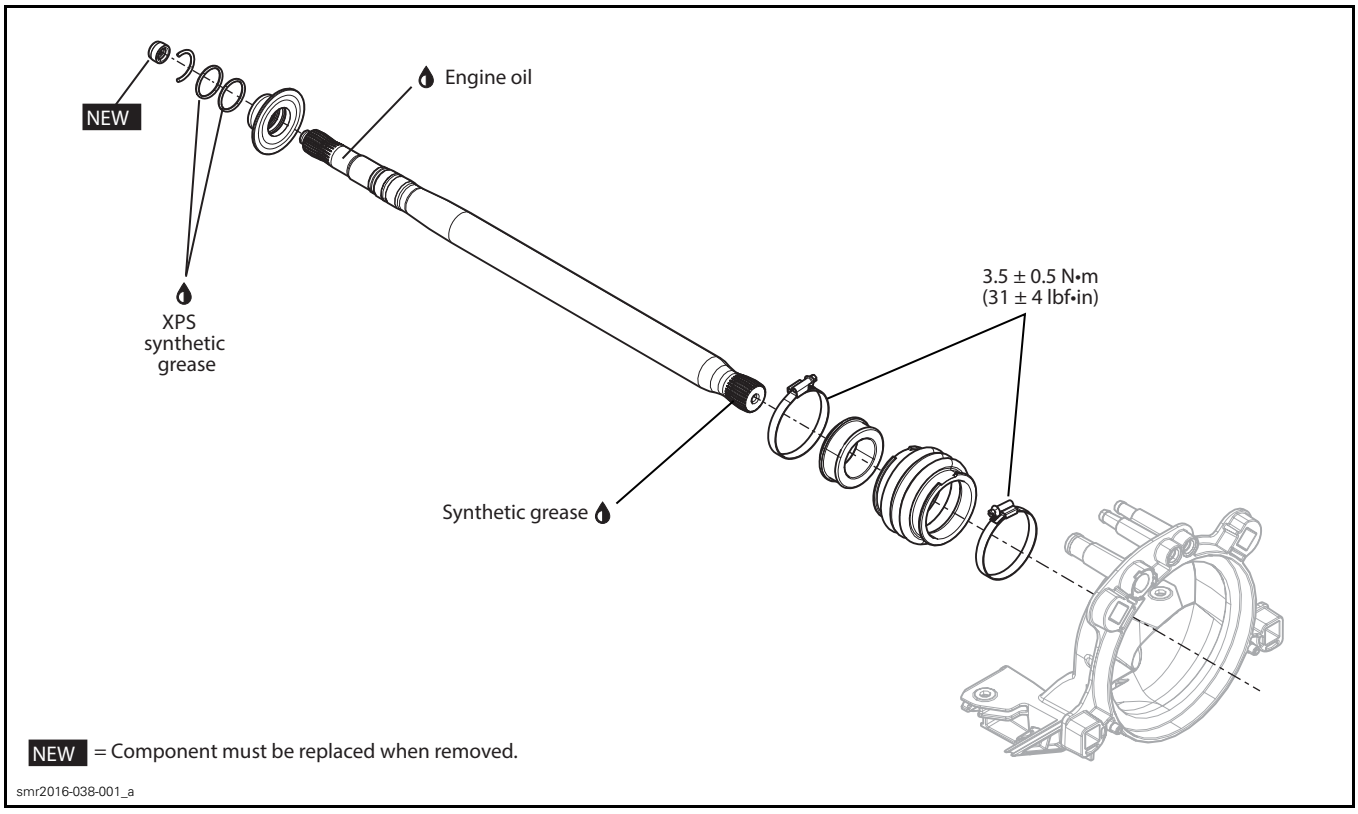

PROCEDURES

DRIVE SHAFT

Drive Shaft Access

Models Without Suspension

If more information is required to remove the following parts, refer to *BODY* subsection.

– Seat bridge (**GTX, RXT and Wake Pro models**)
– Rear handle (**RXP models**)

Models With Suspension

1. Remove moving deck and deck extension. Refer to *BODY* subsection.
2. Remove the air intake silencer. Refer to *AIR INTAKE SYSTEM (MODELS WITH SUSPENSION)* subsection:

Removing the Drive Shaft

Preparation

Refer to *DRIVE SHAFT ACCESS* to remove required parts according to model.

Procedures

NOTE: Ensure jet pump is installed before beginning this procedure.

1. Lift rubber protector to expose PTO seal assembly.
2. Confirm the floating ring is not stuck on drive shaft as follows:

REQUIRED TOOL
DRIVE SHAFT C-CLIP REMOVER (P/N 529 036 026)

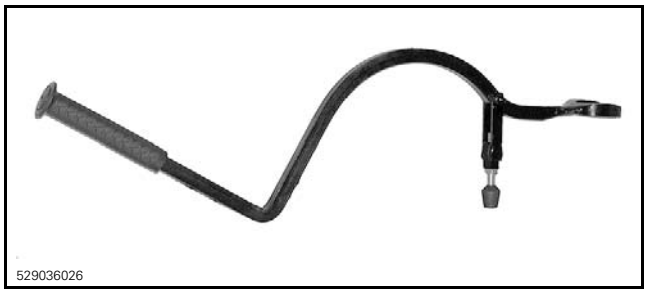

2.1 Place the fork of drive shaft C-clip remover against floating ring.

2.2 Place the adjustable arm against the engine or the arm of the tool against the supercharger.

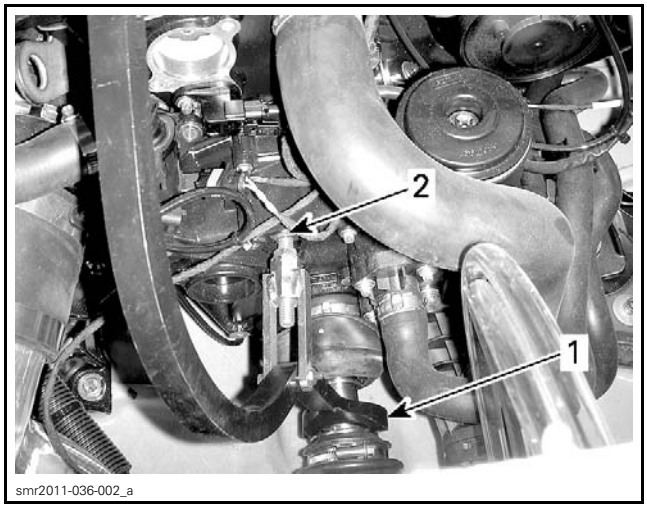

1. Fork against floating ring
2. Adjustable arm

2.3 Move the tool handle toward the front of vehicle to push floating ring rearward.

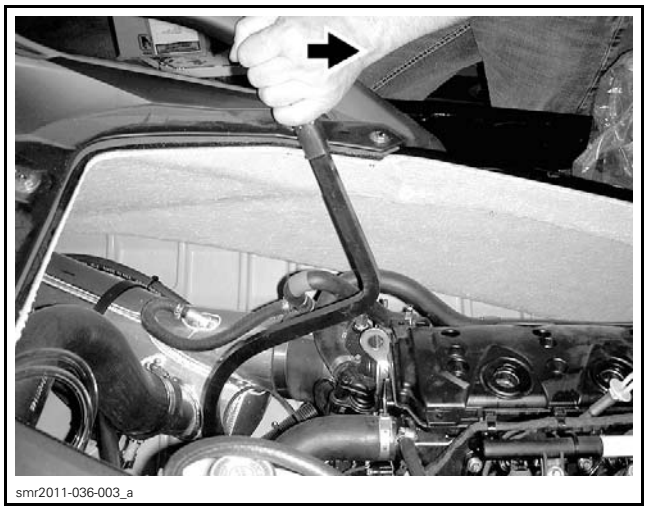

The next steps (3 to 11) should be performed only if the floating ring seems stuck or hard to move. Otherwise, go to the step 12.

NOTE: Do not remove circlip at this time.

3. Remove the drive shaft C-clip remover.
4. Remove the supercharger. Refer to appropriate *SUPERCHARGER* subsection.
5. Install the following tool on drive shaft with its largest opening on PTO side.

REQUIRED TOOL
FLOATING RING TOOL (TYPE II) (P/N 529 036 116)

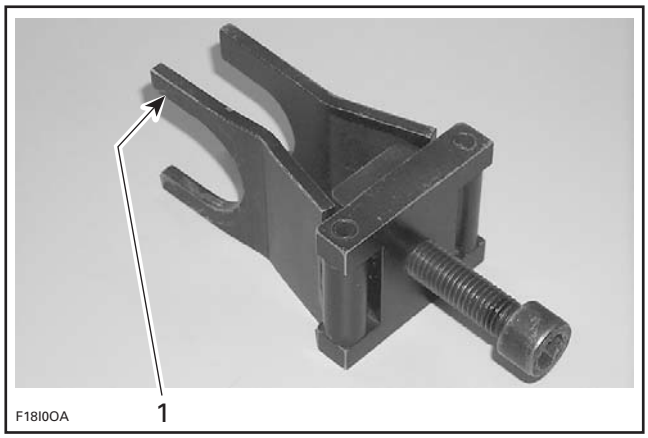

TYPICAL
1. Largest opening on PTO seal side

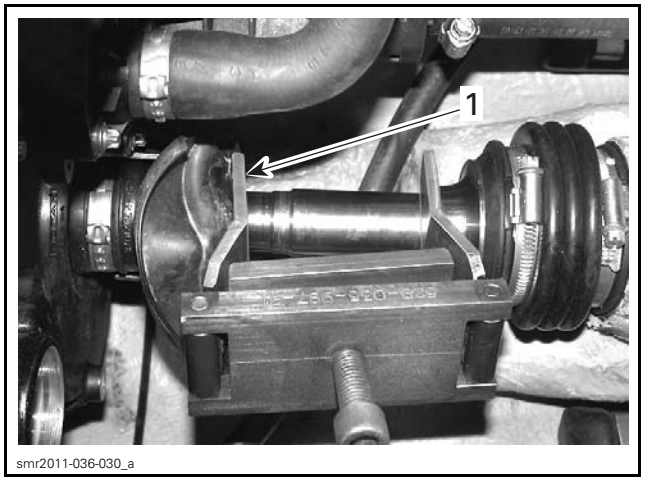

TYPICAL
1. Largest opening here

6. To expose the O-ring contact area, tighten tool screw until the following gap is obtained.

GAP BETWEEN TELLTALE GROOVE AND TOOL EDGE
18 mm (11/16 in)

7. Lubricate O-ring contact area with XPS LUBE (P/N 293 600 016).

NOTE: This is necessary to ease drive shaft removal later in this procedure.

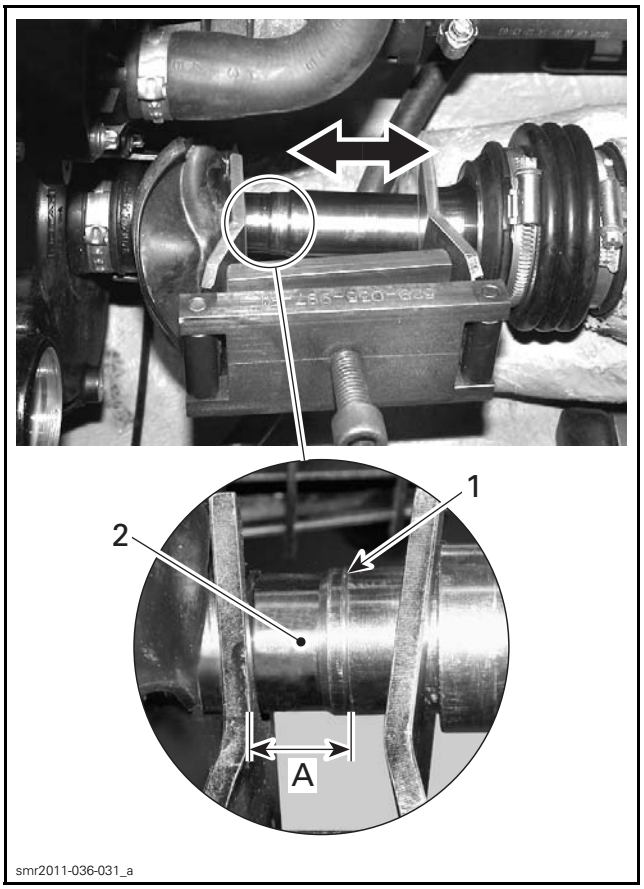

TYPICAL
1. Telltale groove
2. Lubricate this area
A. 18 mm (11/16 in)

8. Remove the floating ring tool.
9. Install the following tool to PTO seal assembly.

REQUIRED TOOL
PTO SUPPORT TOOL (P/N 529 035 842)

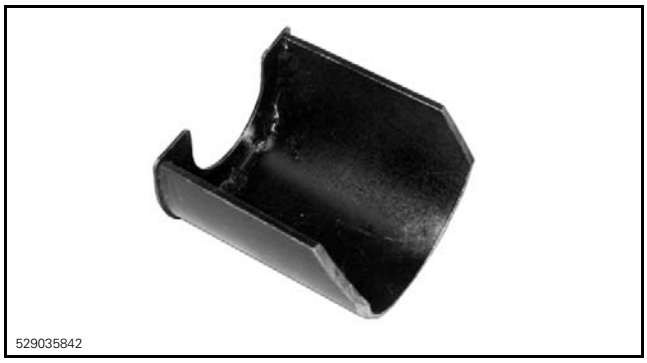

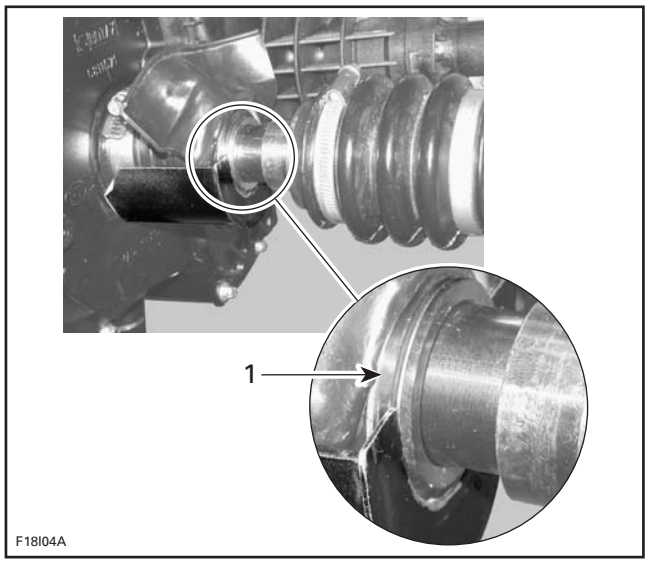

1. Insert in groove of PTO seal assembly

NOTICE **Strictly follow this procedure otherwise damage to component might occur.**

10. Reinstall the floating ring tool as shown.

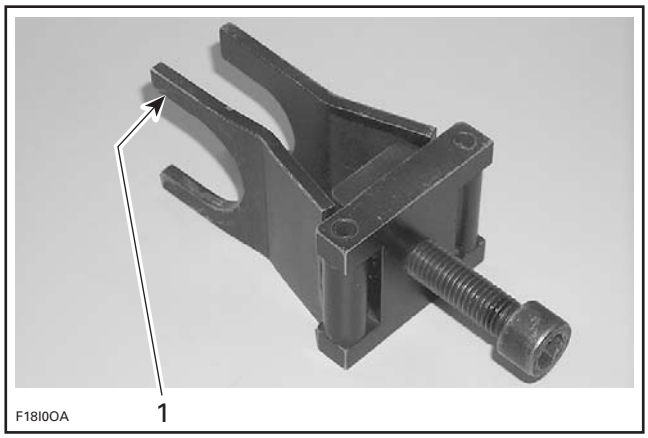

TYPICAL
1. Largest opening on PTO seal side

11. Tighten tool screw to push floating ring rearward and expose circlip.
12. Remove and discard circlip.

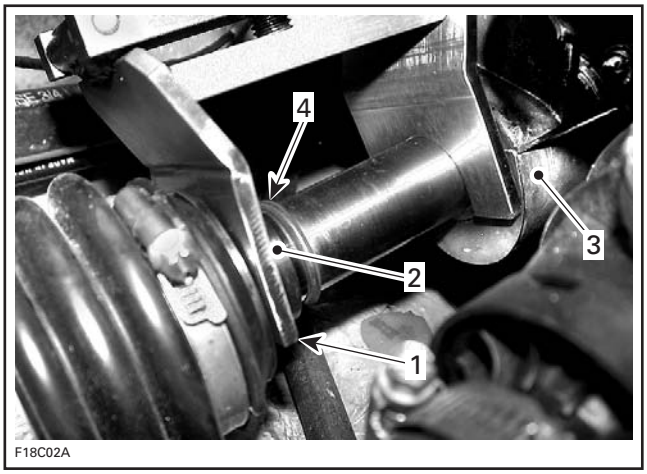

TYPICAL
1. Largest opening here
2. Floating ring
3. PTO seal support tool
4. Remove circlip

13. Remove the floating ring tool.
14. Place rags under PTO housing to prevent spillage. If spillage occurs, clean immediately with the PULLEY FLANGE CLEANER (P/N 413 711 809) to prevent oil stains.
15. Remove jet pump. Refer to *JET PUMP* subsection.
16. Remove drive shaft.

NOTE: A slight jerk to the rear may be required to remove the drive shaft from the PTO seal assembly.

Inspecting the Drive Shaft

Drive Shaft

Inspect condition of circlip groove. If there is any damage or severe wear, replace drive shaft.

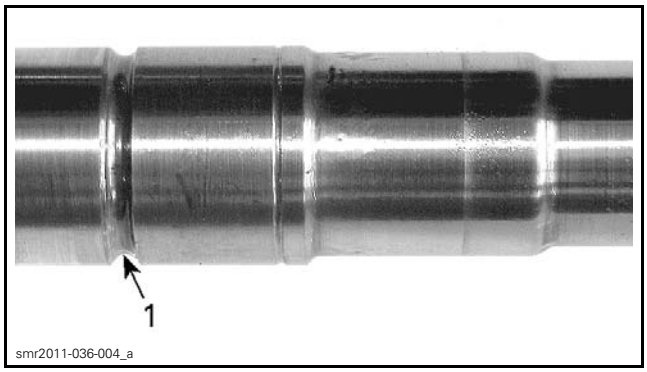

1. Circlip groove

Inspect condition of drive shaft splines. If splines are damaged, replace drive shaft and check splines of impeller and PTO housing.

With your finger nail, feel machined surface of drive shaft. If any irregular surface is found, renew drive shaft.

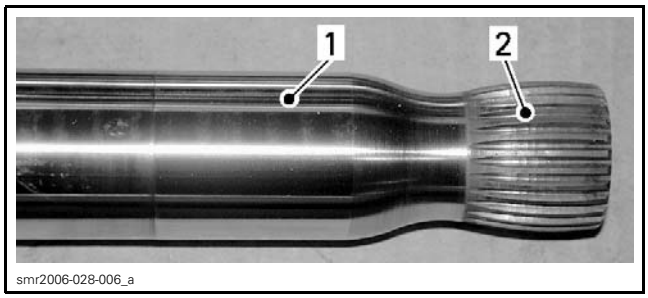

TYPICAL
1. *Surface condition*
2. *Splines condition*

Place drive shaft on V-blocks and set-up a dial gauge in center of shaft. Slowly rotate shaft; difference between highest and lowest dial gauge reading is deflection. Refer to the following illustration.

NOTE: Excessive deflection could cause vibration and damage to drive shaft splines, impeller or floating ring.

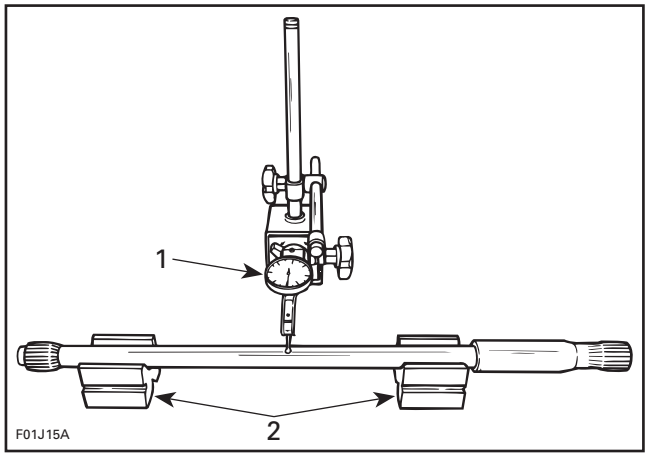

MEASURING DRIVE SHAFT DEFLECTION
1. *Dial gauge*
2. *V-blocks*

Maximum permissible deflection is 0.5 mm (.02 in).

Floating Ring

Inspect condition of O-rings and contact surface of floating ring.

Replace as required.

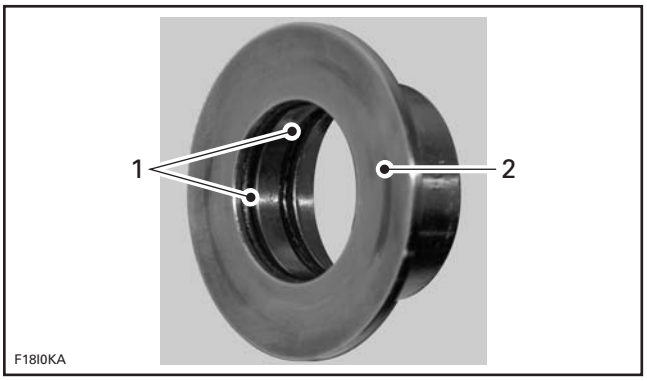

1. *O-rings*
2. *Contact surface*

Installing the Drive Shaft

Before installing drive shaft, discard both O-rings inside PTO seal and install NEW ones.

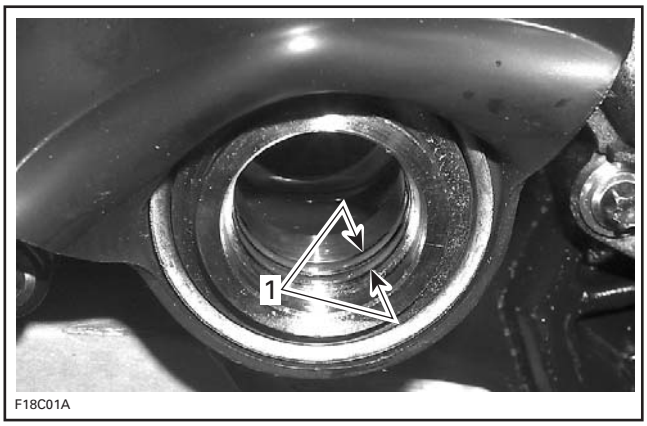

1. *O-rings*

Inspect PTO seal assembly. The inner sleeve must be flush with outer circumference of the assembly. Otherwise, gently push or tap on inner sleeve until flush.

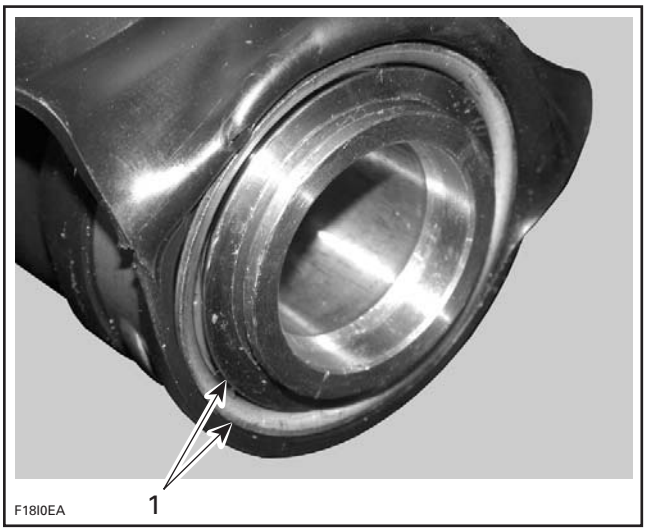

CORRECT POSITION
1. *Inner sleeve flush with outer circumference*

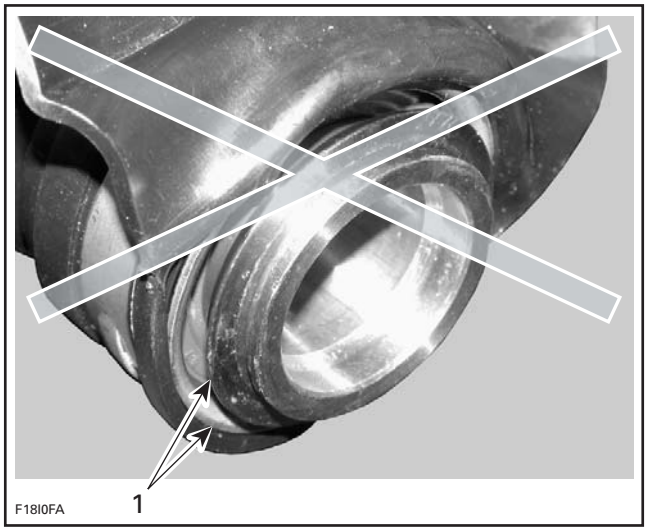

INCORRECT POSITION
1. Inner sleeve not flush with outer circumference

Remove the damper at the end of drive shaft and replace it with a **NEW** one.

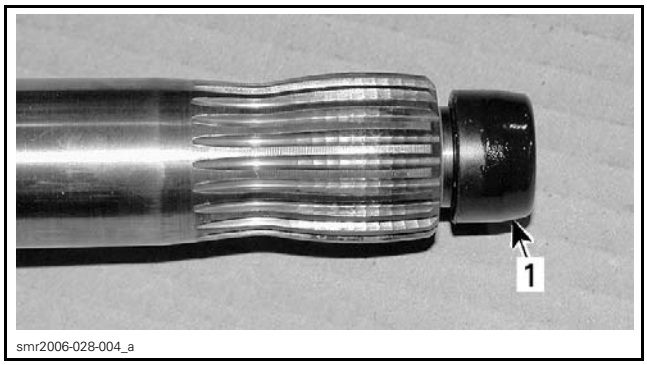

1. Damper

Install the PTO SUPPORT TOOL (P/N 529 035 842) on PTO seal assembly.

Apply a thin coat of XPS SYNTHETIC GREASE (P/N 293 550 010) on the floating ring O-rings. Do not get grease on floating ring contact surface.

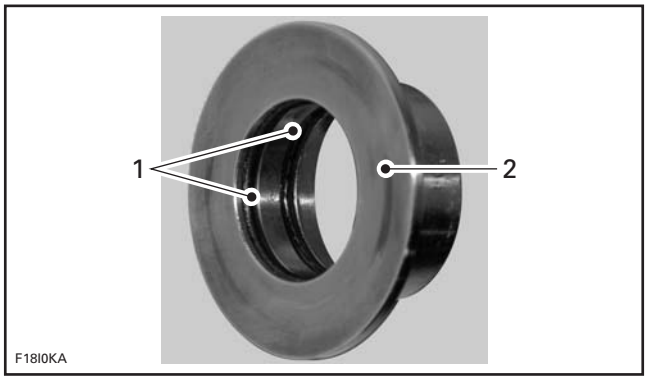

1. XP-S synthetic grease on O-rings
2. No lubrication on contact surface

Slide drive shaft far enough to install floating ring.

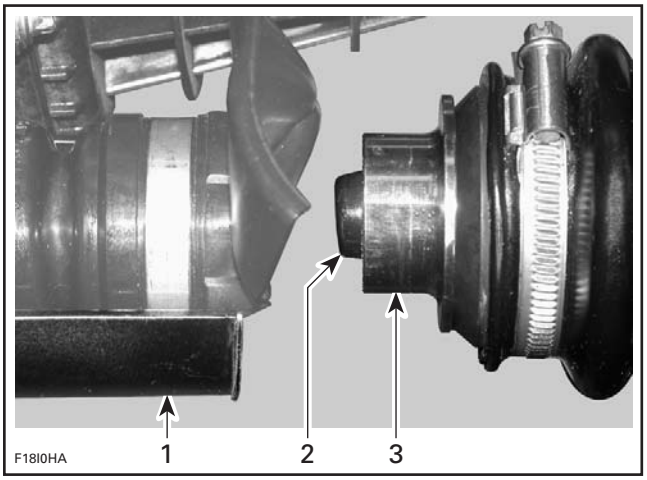

1. PTO seal support
2. Drive shaft end
3. Insert floating ring on shaft end

Continue pushing drive shaft towards engine carefully guiding it in the PTO seal then in crankshaft splines. It may be necessary to move PTO seal assembly up and down to position it in the same axis as the drive shaft.

NOTE: If drive shaft does not enter into the PTO seal, check engine alignment.

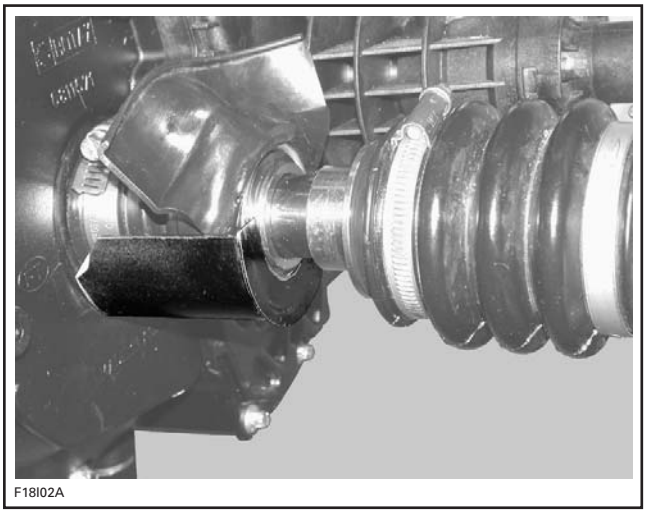

TYPICAL

Maintain PTO seal assembly in the proper position and tap shaft end until it bottoms against engine.

At this time, the telltale groove MUST NOT be visible. This validates the correct position.

NOTICE **If the telltale groove is exposed, the installation is wrong and PTO seal assembly will be pressed into crankshaft splines which could rub a hole in seal thus creating an oil leak.**

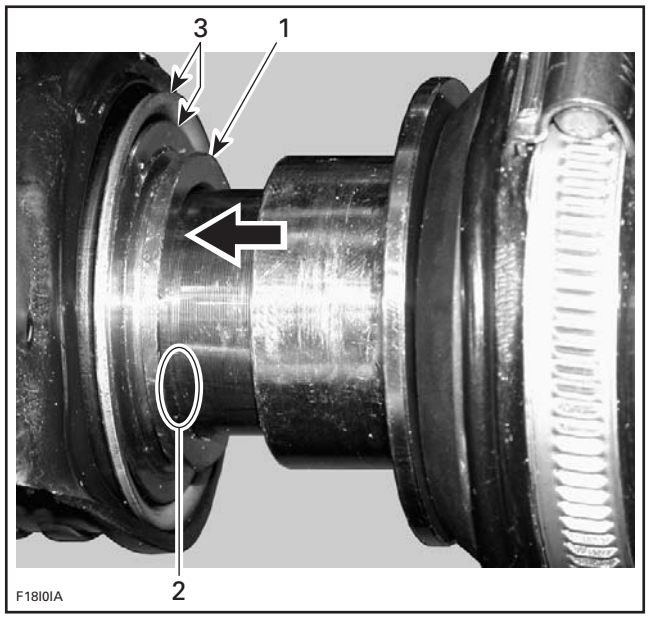

CORRECT INSTALLATION
1. *PTO seal assembly*
2. *Shaft pushed in, hiding telltale groove*
3. *Inner sleeve flush with outer circumference*

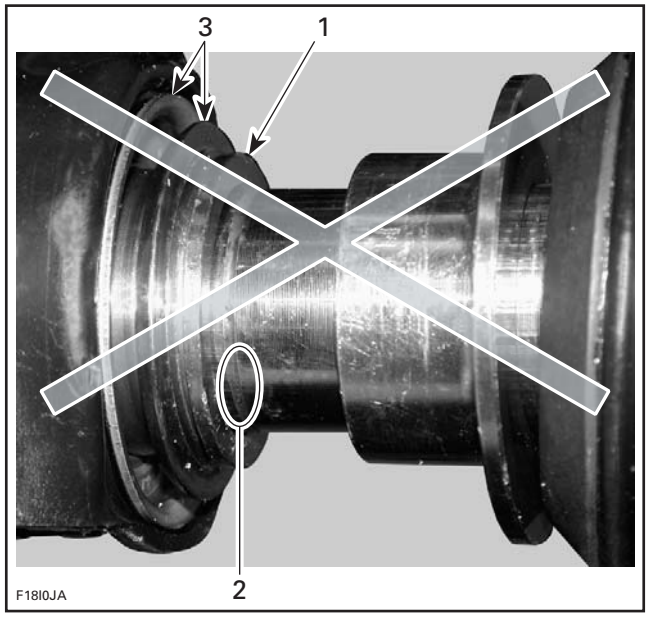

IMPROPER INSTALLATION
1. *PTO seal assembly*
2. *Telltale groove visible*
3. *Inner sleeve NOT flush with outer circumference*

Temporarily install the jet pump housing.

Push floating ring rearwards and install a NEW circlip.

Ensure everything is properly positioned:
- Telltale groove is not visible
- Inner sleeve is flush with outer circumference of PTO seal assembly
- Circlip is not exposed.

If telltale groove is visible, pull PTO seal assembly rearwards to fully extend it.

If inner sleeve is not flush, gently tap it until it is flush.

Reposition rubber protector.

Permanently install jet pump. Refer to *JET PUMP* subsection.

Test watercraft then ensure there is:
- No oil leak in PTO seal area
- No water intrusion by the thru-hull fitting area.

DRIVE SHAFT BOOT

Inspecting the Drive Shaft Boot

Inspect the condition of boot. If there is any damage or evidence of wear, replace it.

Removing the Drive Shaft Boot

Remove drive shaft. Refer to *DRIVE SHAFT* in this subsection.

Loosen gear clamp holding boot, then carefully pull boot and carbon ring from hull insert.

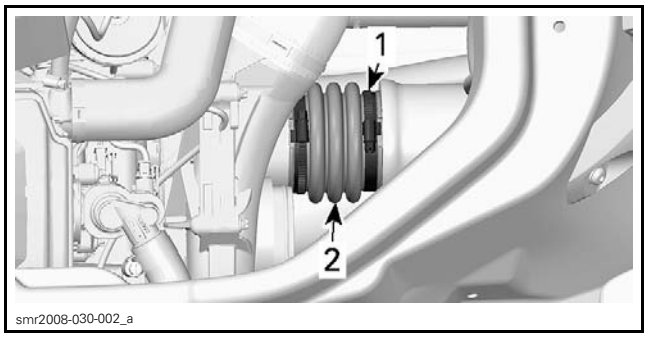

TYPICAL
1. *Loosen this clamp*
2. *Drive shaft boot*

Installing the Drive Shaft Boot

The installation is the reverse of the removal procedure.

CARBON RING

Removing the Carbon Ring

Remove *DRIVE SHAFT BOOT*. See procedure in this subsection.

Loosen gear clamp then pull carbon ring from drive shaft boot.

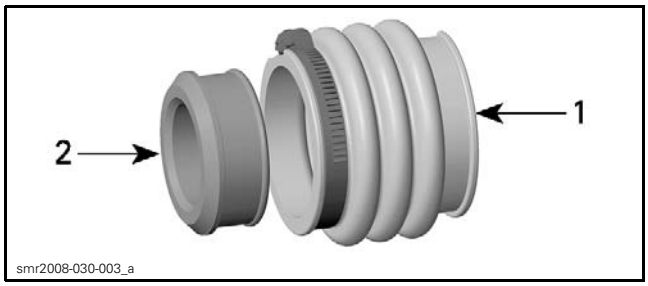

1. Drive shaft boot
2. Carbon ring

Installing the Carbon Ring

The installation is the reverse of the removal procedure.

MANUAL SUSPENSION (S)

SERVICE TOOLS

Description	Part Number	Page
SUPERTANIUM DRILL BIT 3/16"	529 031 800	11

FRONT SUSPENSION ARM

If you bought this manual from any other seller please leave them NEGATIVE feedback and notify me at bestshopmanuals@gmail.com

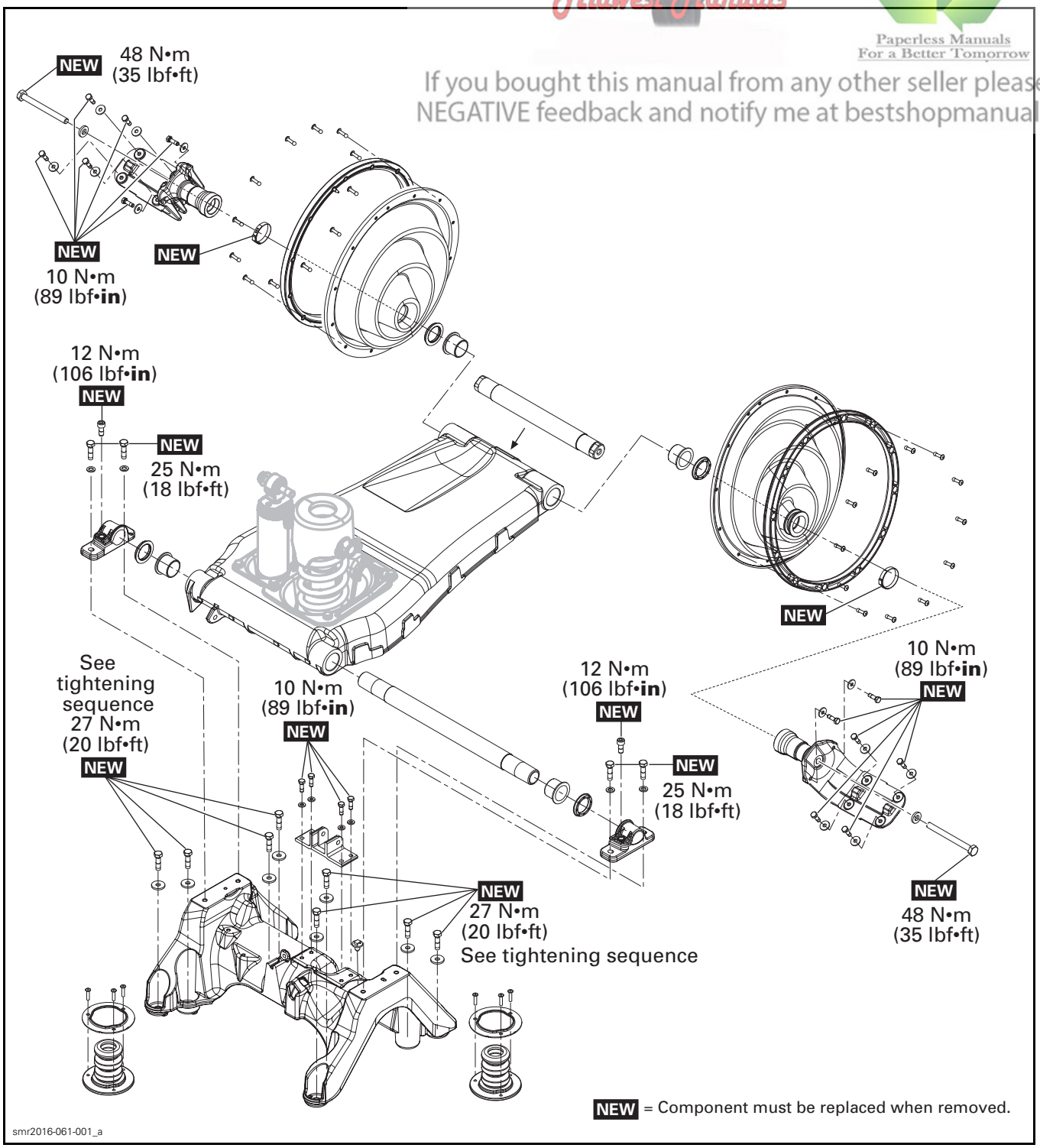

SHOCK ABSORBER

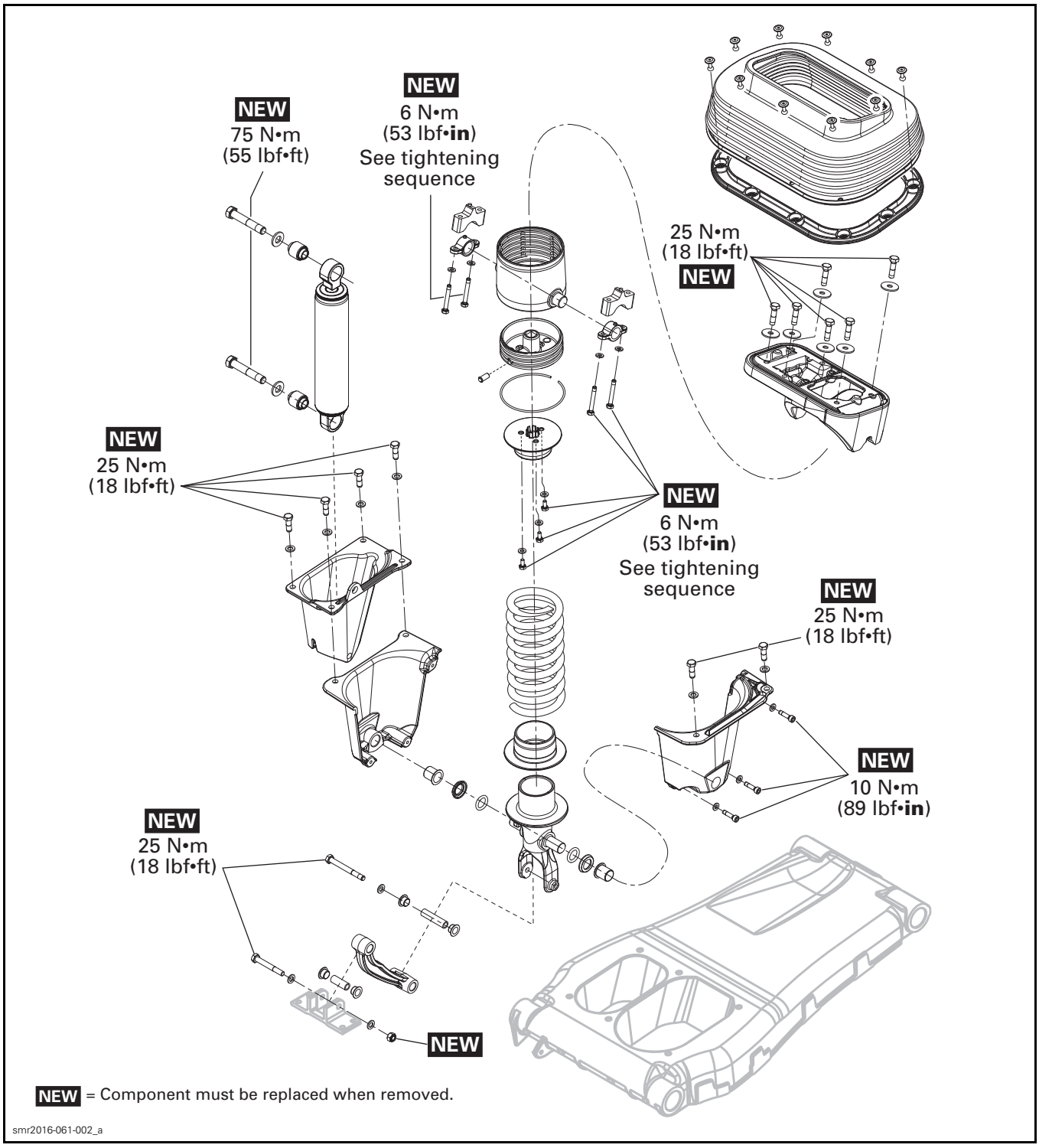

REAR SUSPENSION ARM

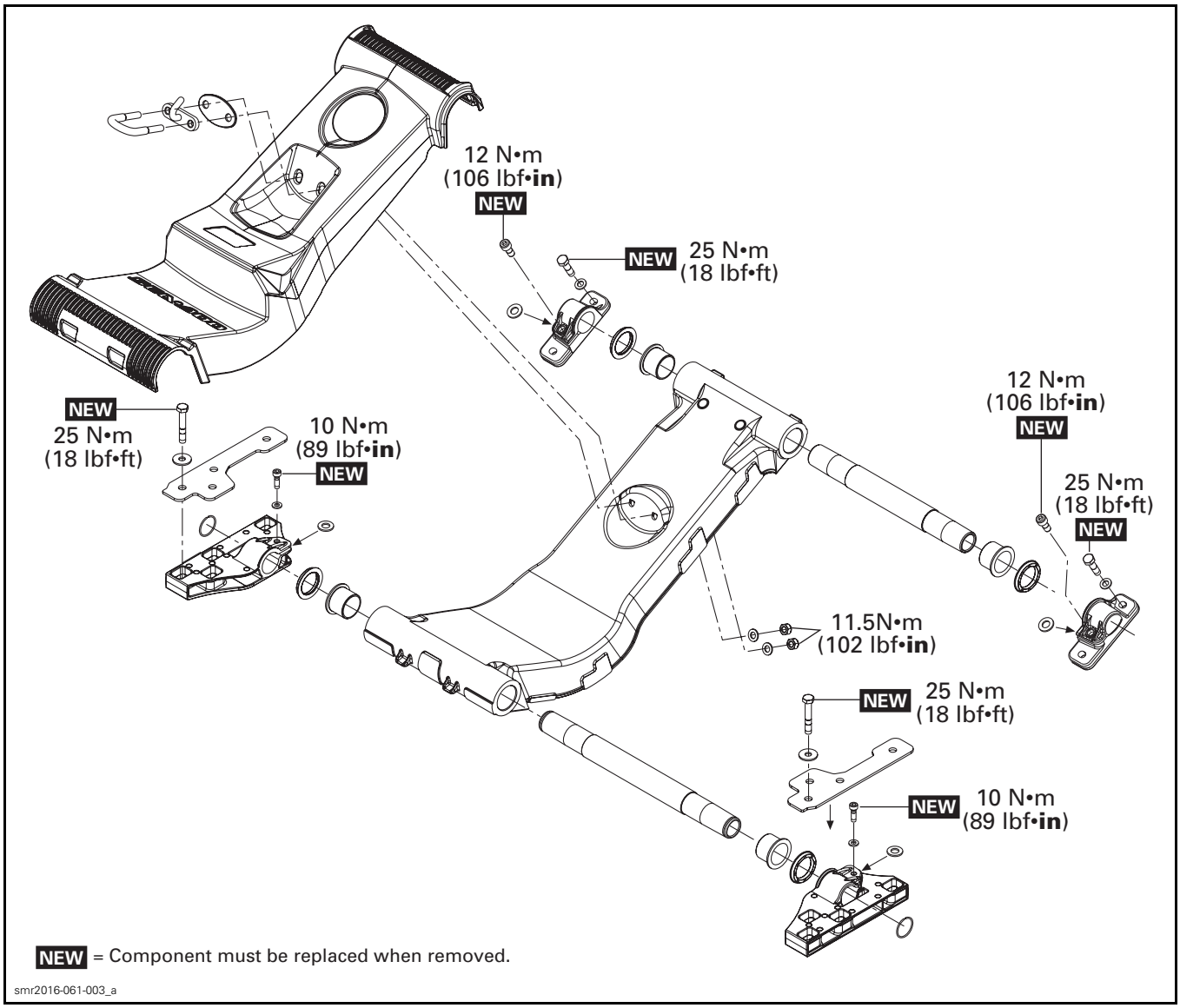

GENERAL

SYSTEM DESCRIPTION

The Suspension (S) allows the moving deck to move independently from the fixed deck, isolating rider and passenger from the impact of rough water.

The moving deck may be adjusted mechanically to absorb (dampen) water shocks according to the driver riding style and water conditions.

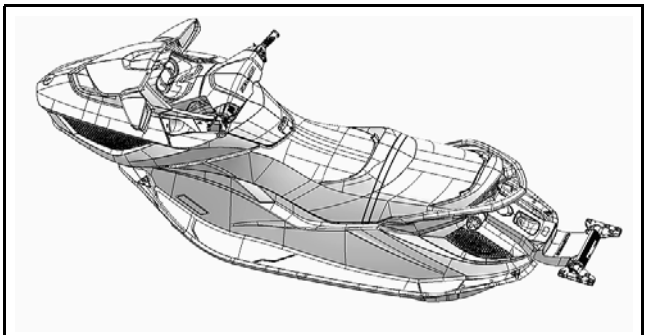

smr2009-041-080

TYPICAL - MOVING DECK

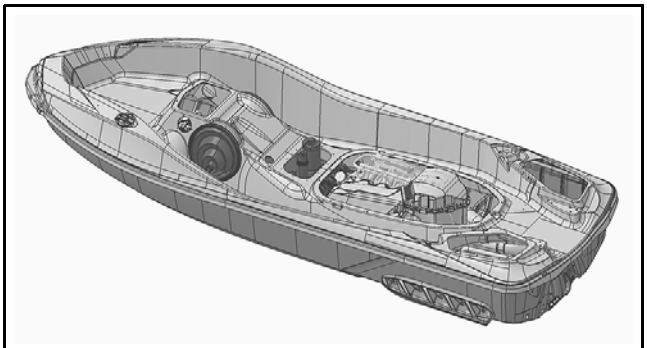

sdd2009-001-202

TYPICAL - FIXED DECK

Adjusting the Spring Preload

The spring preload can be easily adjusted using a 1/2" drive ratchet wrench with an extension.

The spring preload adjuster is located under the seat.

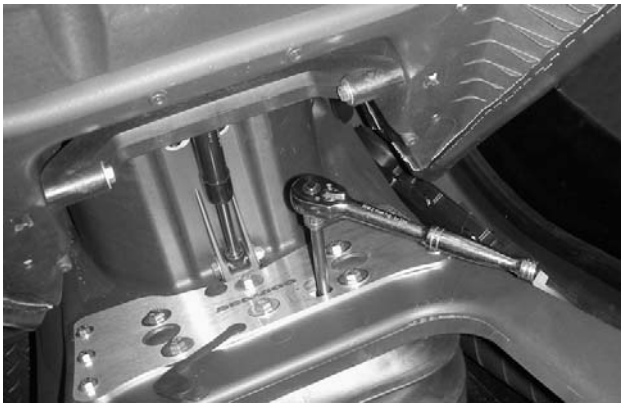

smr2011-037-001

SPRING PRELOAD ADJUSTMENT

RIDERS TOTAL WEIGHT (KG/LB)	NBR OF CLICKS ON SPRING ADJUSTER (CLOCKWISE*)
68 kg (150 lb)	0
79 kg (175 lb)	2
90 kg (200 lb)	4
102 kg (225 lb)	6
113 kg (250 lb)	8
125 kg (275 lb)	10
136 kg (300 lb)	12
147 kg (325 lb)	14
159 kg (350 lb)	16
170 kg (375 lb)	18
* 0 is set at fully unscrewed position (counterclockwise).	

TROUBLESHOOTING

DIAGNOSTIC GUIDELINES

The following is provided to help in diagnosing the probable source of troubles. It is a guideline and it should not be assumed to list all possible problems.

SUSPENSION MOVES ERRATICALLY

1. **Defective shock absorber.**
   - Replace the shock absorber.
2. **Broken spring.**
   - Replace spring.

SUSPENSION NOISE (DURING A TURN)

1. Front or rear suspension arm shaft supports position.
   - *Supports must be flushed against both ends of shaft. Reposition shaft in its supports.*
2. Worn arm shaft bushings.
   - *Check front and rear arm shaft bushings condition and replace as required.*
3. Snap rings on both sides of the rear lower arm shaft are not properly positioned.
   - *Reposition shaft in its supports. Refer to SUSPENSION ARM SHAFTS.*

SUSPENSION NOISE (FRONT OF SEAT)

1. Holder retaining screws are loose.
   - *Tighten shock absorber holder screws to recommended torque.*
2. Shock absorber screws are loose.
   - *Tighten shock absorber screws to recommended torque.*

SUSPENSION BOTTOMS HARD

1. Spring out of specification or broken.
   - *Replace spring.*
2. Shock absorber is damaged.
   - *Check shock absorber resistance. Replace shock absorber.*
3. Bump stops damaged or worn.
   - *Replace both bump stops.*

PROCEDURES

SHOCK ABSORBER

Shock Absorber Location

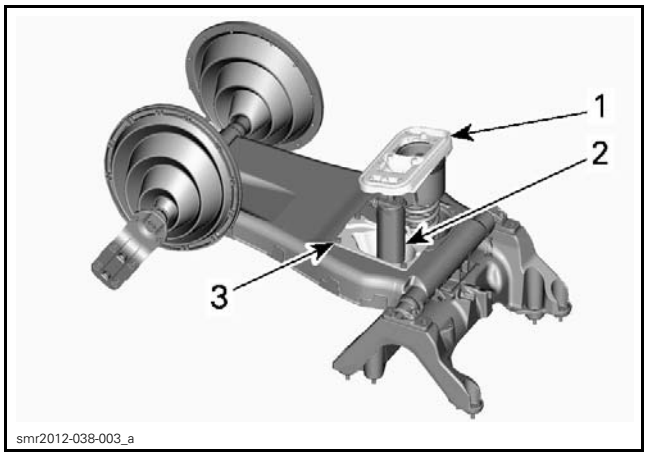

smr2012-038-003_a

1. *Mounting plate*
2. *Shock absorber*
3. *Shock holder*

Removing the Shock Absorber

1. Remove moving deck. Refer to *BODY (GTX, RXT AND WAKE PRO SERIES)* subsection.
2. Remove shock absorber upper bolt.

smr2012-038-010_a

1. *Shock absorber upper bolt*

3. Remove mounting plate by pulling it upwards.

smr2012-038-009_a

MOUNTING PLATE REMOVAL

4. Remove spring and lower spring bushing.

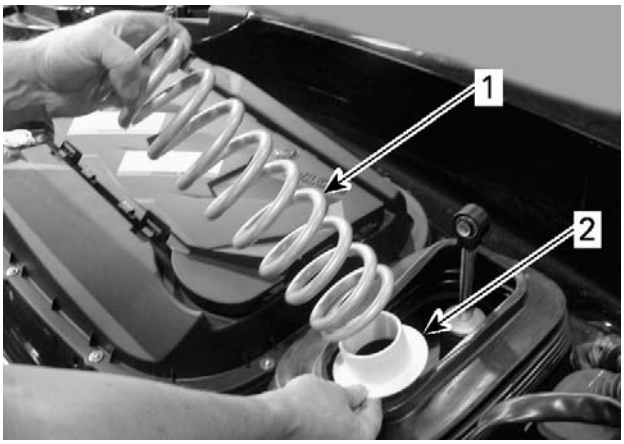

smr2011-037-010_a

1. *Spring*
2. *Lower spring bushing*

5. Remove shock holder retaining screws. Discard screws, keep washers

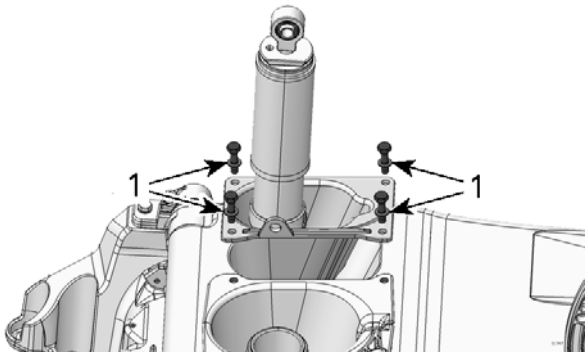

smr2012-038-001_a

TYPICAL
1. *Shock holder retaining screws and washers*

6. Remove shock absorber and shock holder.

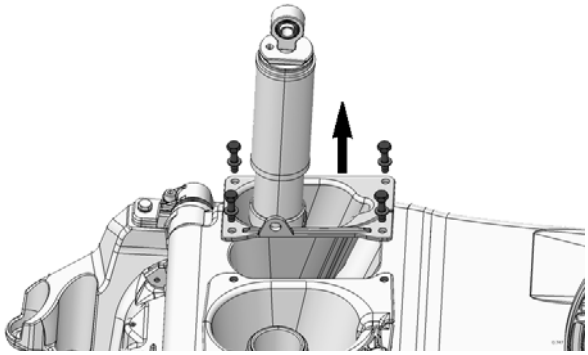
smr2012-038-001_b

SHOCK ABSORBER REMOVAL

7. Remove shock holder from shock absorber.

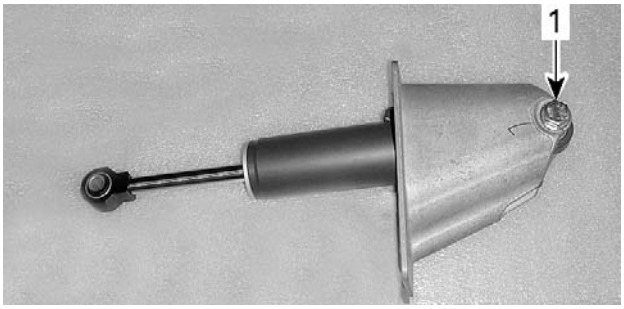

smr2012-038-002_a

1. *Shock absorber lower bolt*

Inspecting the Shock Absorber

NOTE: Because of gas pressure, strong resistance is felt when compressing shock.

To inspect shock operation, or if suspecting an internal leak between oil chamber and gas chamber, check shock as follows:

1. Grab the shock absorber body firmly and press the rod end against a firm surface.
   - 1.1 Verify the compression stroke when the rod is fully extended.
   - 1.2 Make sure that shock absorber rod can be completely inserted in the shock body.
2. The shock should extend unassisted. Rod must come out at a steady speed.

If any problem is detected, replace the shock absorber.

Installing the Shock Absorber

The installation is the reverse of the removal procedure. However, pay attention to the following.

Secure shock absorber using **NEW** bolts.

Tighten shock absorber bolts to specification.

TIGHTENING TORQUE	
Shock absorber bolt	75 N•m (55 lbf•ft)

Install **NEW** shock holder screws.

Tighten shock holder screws to specification.

TIGHTENING TORQUE	
Shock holder screw	25 N•m (18 lbf•ft)

SPRING

Spring Location

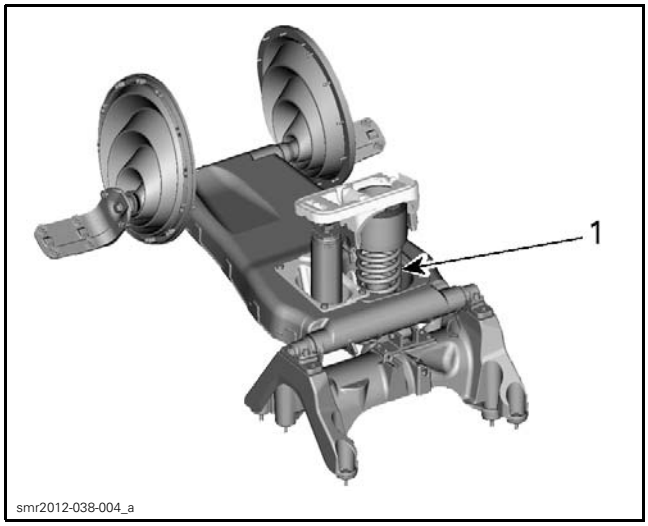

1. Spring

Removing the Spring

1. Remove moving deck. Refer to *BODY (GTX, RXT AND WAKE PRO SERIES)* subsection.
2. Remove shock holder from its location. Refer to *SHOCK ABSORBER* in this subsection.

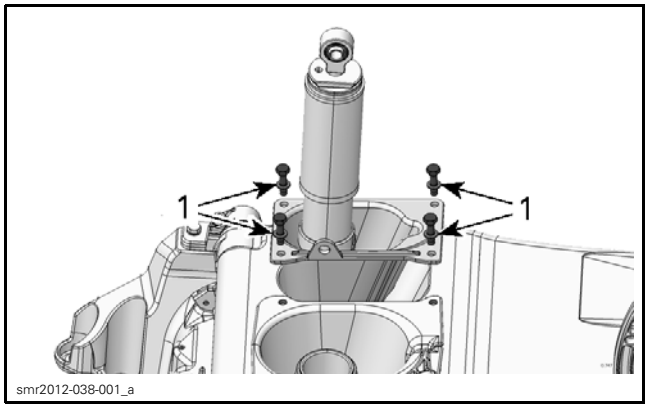

TYPICAL
1. Shock holder retaining screws and washers

3. Move shock holder aside.
4. Remove spring holder retaining screws.

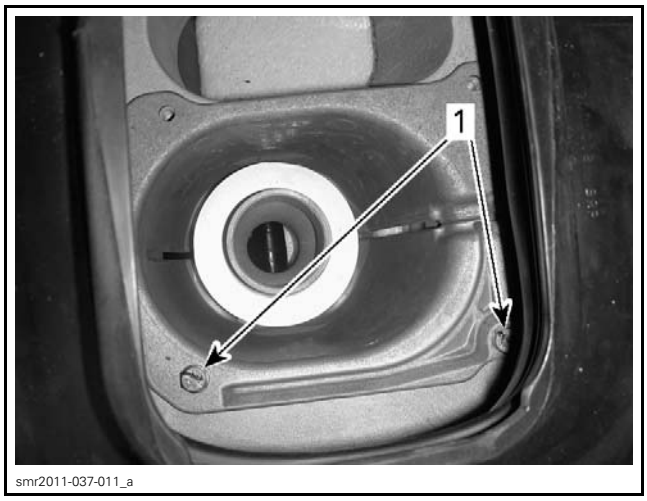

1. Spring holder retaining screws

5. Remove screw securing spring holder to link arm.

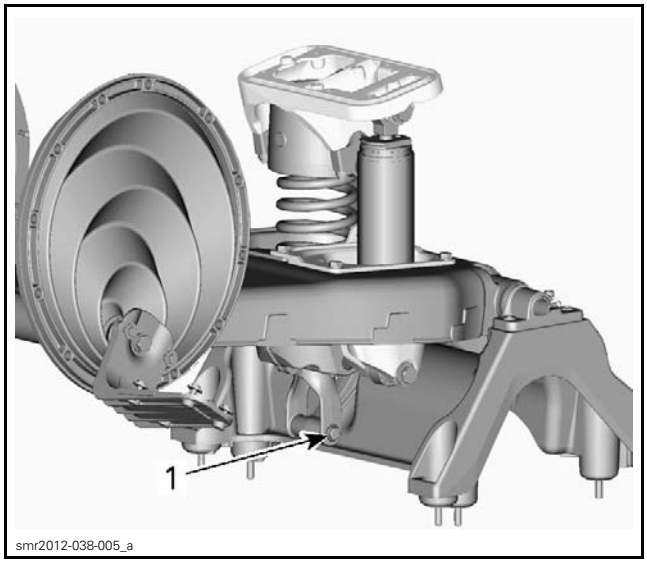

TYPICAL - SOME PARTS REMOVED FOR CLARITY
1. Screw securing spring holder to link arm

6. Remove spring holder.

smr2011-037-012

SPRING HOLDER REMOVAL

Inspecting the Spring

Inspect spring and replace if one of the following damage is detected:

– Crack in the paint
– Rust
– Other visible damages.

NOTE: If rust is limited to a 1/4 of the first coil, the spring should not be replaced.

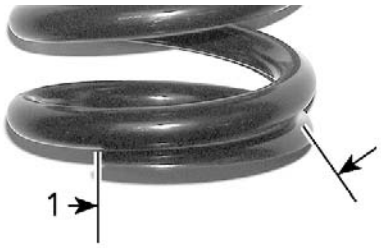

smr2009-041-090_a

1. Zone where presence of rust is normal

Check the curve line of spring.

SPRING SHAPE	
Maximum	7 mm (9/32 in)

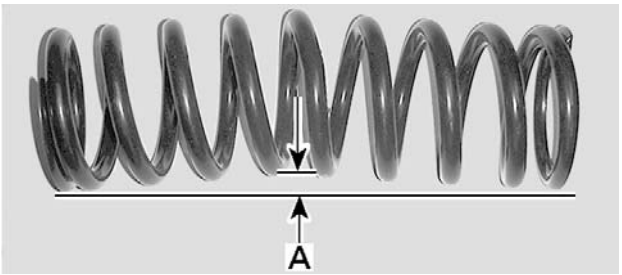

smr2009-041-041_a

A. 7 mm (9/32 in) maximum

Replace spring if out of specification.

Installing the Spring

The installation is the reverse of the removal procedure. However, pay attention to the following.

Secure shock absorber using **NEW** bolts.

Tighten shock absorber bolts to specification.

TIGHTENING TORQUE	
Shock absorber bolt	75 N•m (55 lbf•ft)

Install **NEW** shock holder screws and spring holder screws.

Tighten shock and spring holder screws to specification.

TIGHTENING TORQUE	
Shock holder screw	25 N•m (18 lbf•ft)
Spring holder screw	25 N•m (18 lbf•ft)

If spring supports were disassembled, pay attention to the following.

Install **NEW** upper spring support screws.

Tighten upper spring support screws to specification as per the following sequence.

TIGHTENING TORQUE	
Upper spring support screw	6 N•m (53 lbf•**in**)

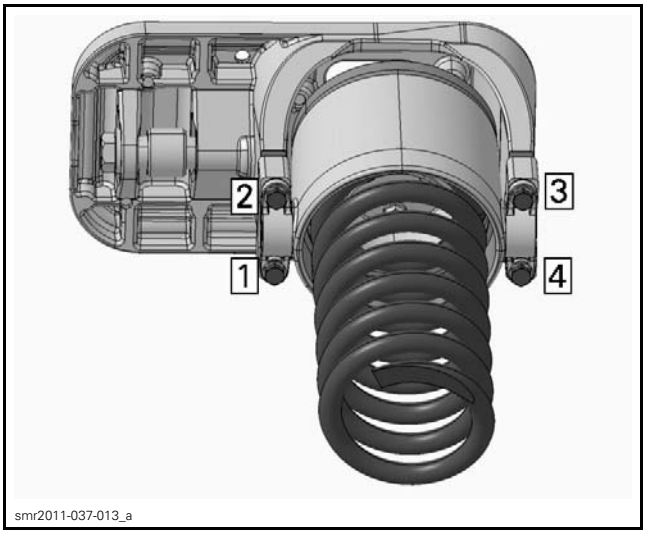

smr2011-037-013_a

TIGHTENING SEQUENCE

Tighten upper wear ring retaining screws to specification as per the following sequence.

TIGHTENING TORQUE	
Upper wear ring retaining screw	6 N•m (53 lbf•**in**)

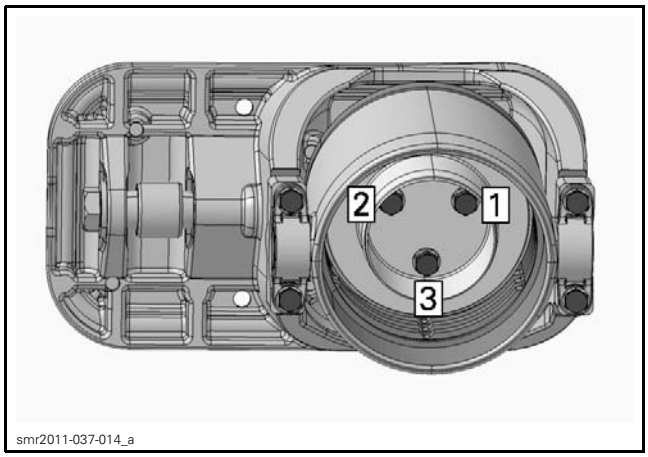

TIGHTENING SEQUENCE

LINK ARM

Link Arm Access

Refer to *BODY (GTX, RXT AND WAKE PRO SERIES)* subsection and remove:

– Moving deck
– Deck extension.

Removing the Link Arm

1. Remove spring holder. Refer to *REMOVING THE SPRING* in this subsection.
2. Remove link arm lower retaining bolt.

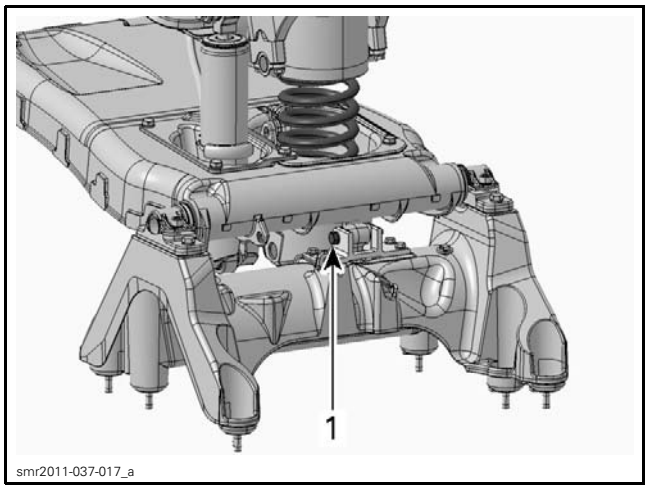

TYPICAL - SOME PARTS REMOVED FOR CLARITY
1. Link arm lower retaining bolt

Installing the Link Arm

The installation is the reverse of the removal procedure. However, pay attention to the following.

Secure link arm using **NEW** bolts.

Tighten link arm bolts to specification.

TIGHTENING TORQUE	
Link arm bolt	25 N•m (18 lbf•ft)

LATERAL SUPPORT

Lateral Support Location

The lateral supports are located on both side of the fixed deck to support the moving deck.

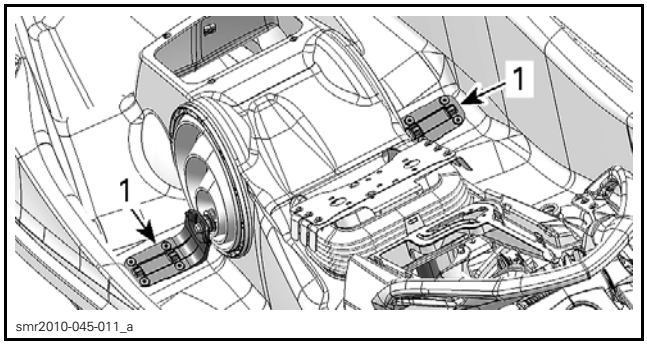

1. Lateral supports

Removing the Lateral Support

NOTE: The following instruction can be used for RH or LH support.

1. Remove the moving deck. Refer to *BODY (GTX, RXT AND WAKE PRO SERIES)* subsection.
2. Cut the Oetiker clamp retaining lateral bellows to lateral support.

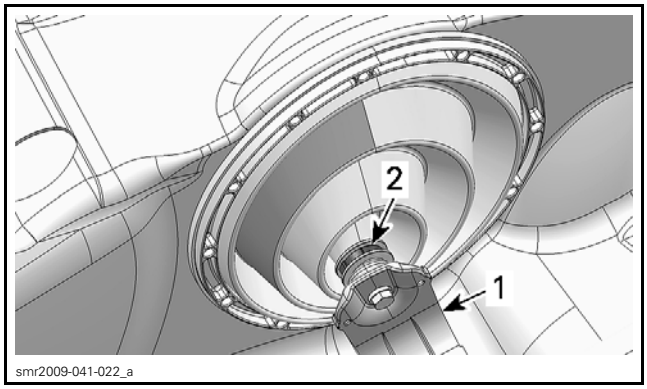

1. Lateral support
2. Oetiker clamp

3. Remove the lateral support screw.

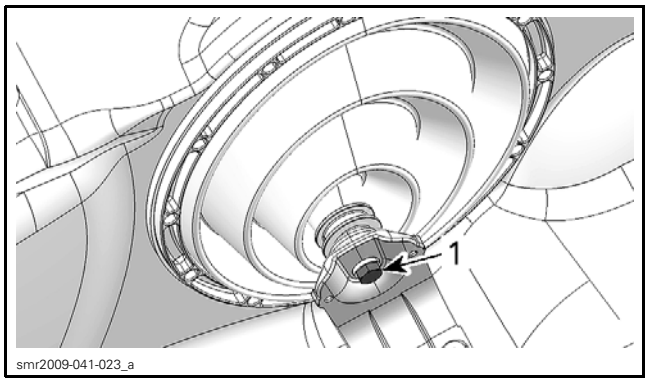

1. Lateral support screw

4. Remove lateral support from lateral bellows.

Installing the Lateral Support

The installation is the reverse of the removal procedure. However, pay attention to the following.

Apply soapy water solution on bellows opening and insert the lateral support.

Index lateral supports with the front suspension shaft ends. Lateral supports can be inserted in one position only.

Install **new** lateral support screw.

Tighten lateral support screw to specification.

TIGHTENING TORQUE	
Lateral support screw	48 N•m (35 lbf•ft)

Install a **new** Oetiker clamp. Position the ear of clamp rearwards.

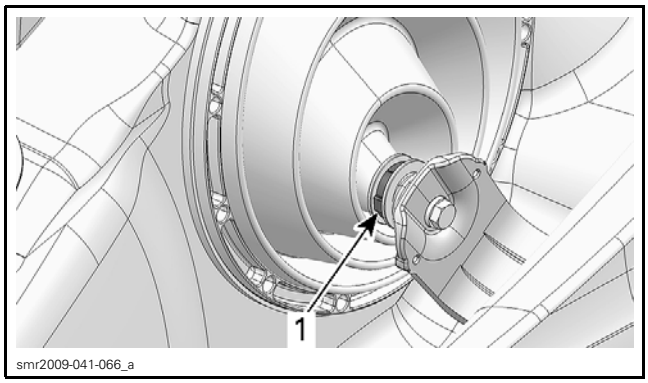

RH SIDE SHOWN
1. Ear of clamp rearwards

LATERAL BELLOWS

Lateral Bellows Location

The lateral bellows are located on each side of the fixed deck.

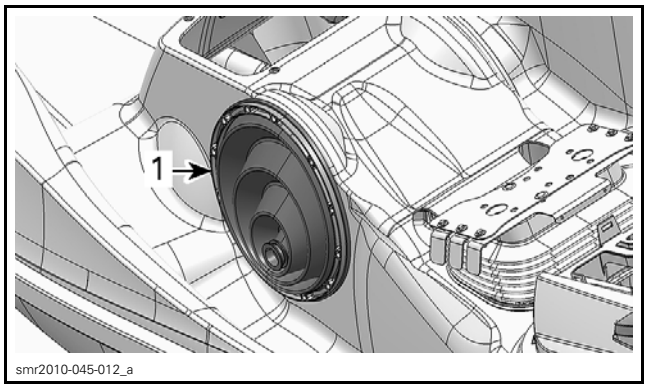

1. LH lateral bellows shown

Removing the Lateral Bellows

1. Remove lateral support screw.

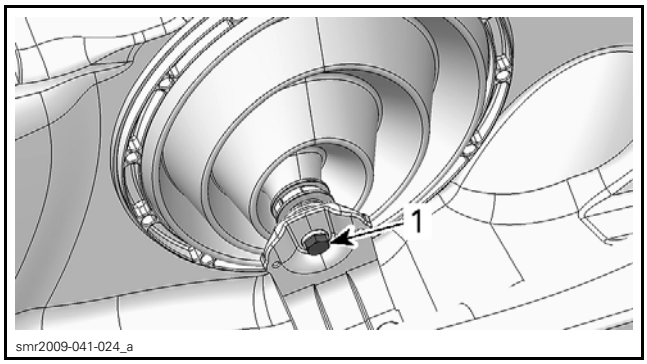

1. Lateral support screw

2. Detach lateral support from suspension shaft.
3. Using the SUPERTANIUM DRILL BIT 3/16" (P/N 529 031 800), remove all rivets (12) securing the lateral bellows ring to body.

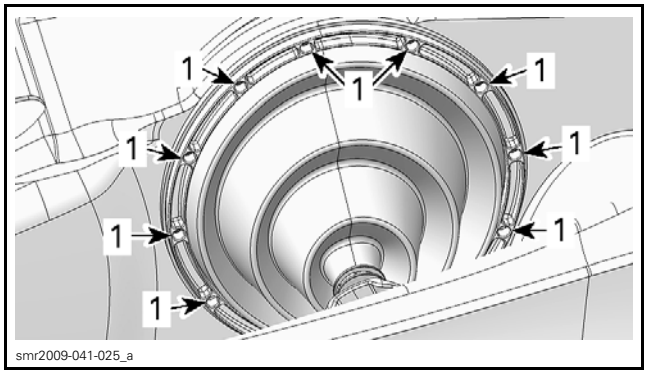

1. Rivet location

4. Remove lateral ring.
5. Cut Oetiker clamp securing bellows to lateral support.
6. Separate lateral support from bellows.

Installing the Lateral Bellows

The installation is the reverse of the removal procedure. However, pay attention to the following.

Apply soapy water solution on bellows opening and insert the lateral support.

Index suspension shaft with the lateral support. The lateral support can be inserted in one position only.

Install the retaining ring. Align the ring pin with holes in bellows and body.

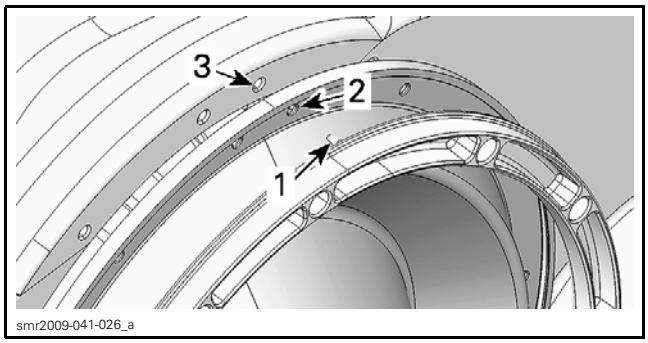

1. *Ring pin*
2. *Bellows alignment hole*
3. *Body hole*

Install new rivets. If the head of rivet tool cannot be inserted in ring opening, use the sleeve (P/N 707 000 181) to offset the rivet tool and well lean the rivet head against ring.

Index lateral supports with the front suspension shaft ends. Lateral supports can be inserted in one position only.

Install **new** lateral support screw.

Tighten lateral support screw to specification.

TIGHTENING TORQUE	
Lateral support screw	48 N•m (35 lbf•ft)

Install a new Oetiker clamp. Position the ear of clamp rearwards.

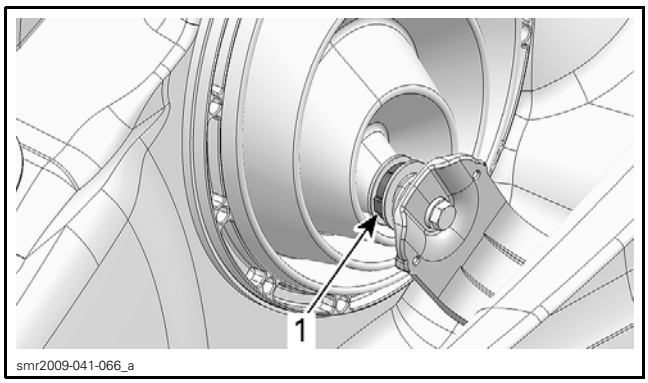

RH SIDE SHOWN
1. *Ear of clamp rearwards*

FRONT SUSPENSION ARM

Front Suspension Arm Location

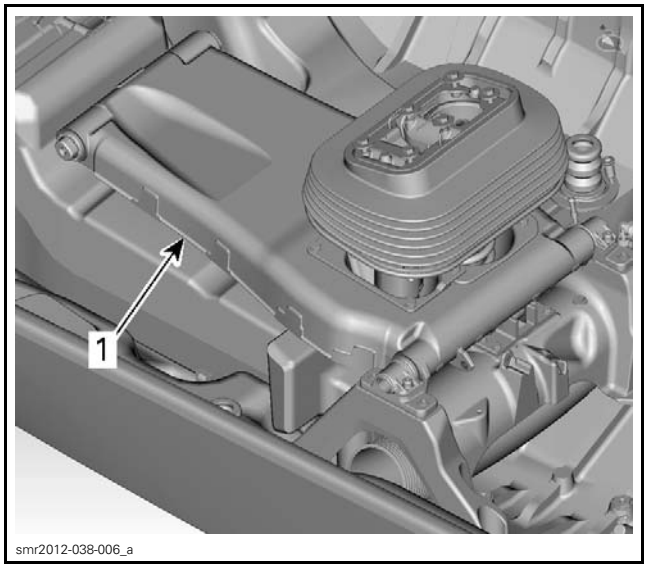

TYPICAL - FIXED DECK REMOVED FOR CLARITY
1. *Front suspension arm*

Removing the Front Suspension Arm

1. Remove the moving deck. Refer to *BODY (GTX, RXT AND WAKE PRO SERIES)* subsection.
2. Remove the engine. Refer to *ENGINE REMOVAL AND INSTALLATION* subsection.
3. Remove both lateral support screws.

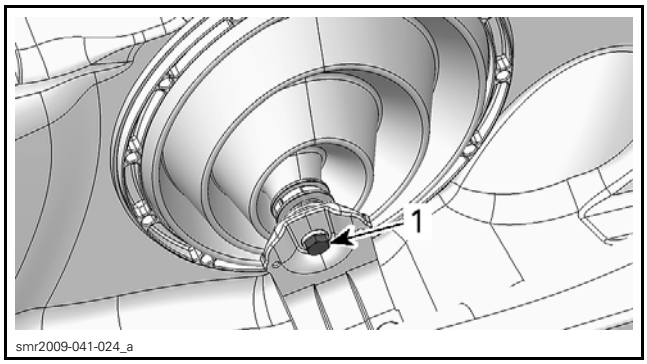

RH SIDE SHOWN
1. *Lateral support screw*

4. Detach lateral supports from suspension arm shaft.
5. Remove screws securing both shaft supports to suspension base.

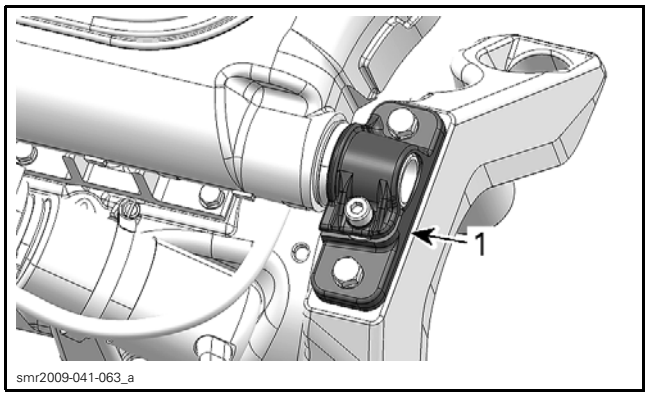

1. Shaft support (one on each side)

6. Move front suspension arm rearward to remove it.

Installing the Front Suspension Arm

The installation is the reverse of the removal procedure. However, pay attention to the following.

If a shaft support has been loosened from the suspension arm shaft, see *SUSPENSION ARM SHAFTS* for proper installation procedure.

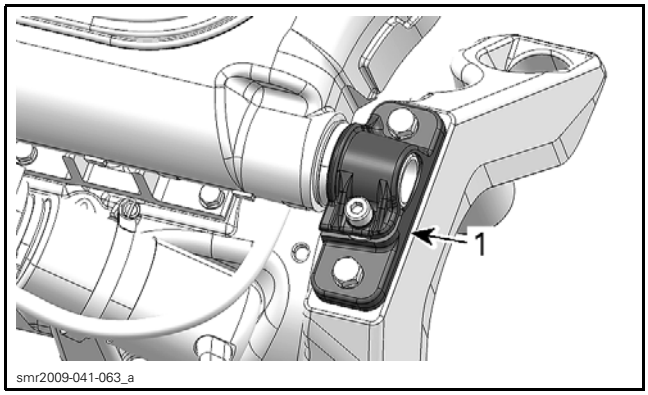

1. Shaft support (one on each side)

Install **NEW** shaft support screws.

Tighten shaft support screws to specification.

TIGHTENING TORQUE	
Shaft support screws	25 N•m (18 lbf•ft)

SUSPENSION BASE

Suspension Base Location

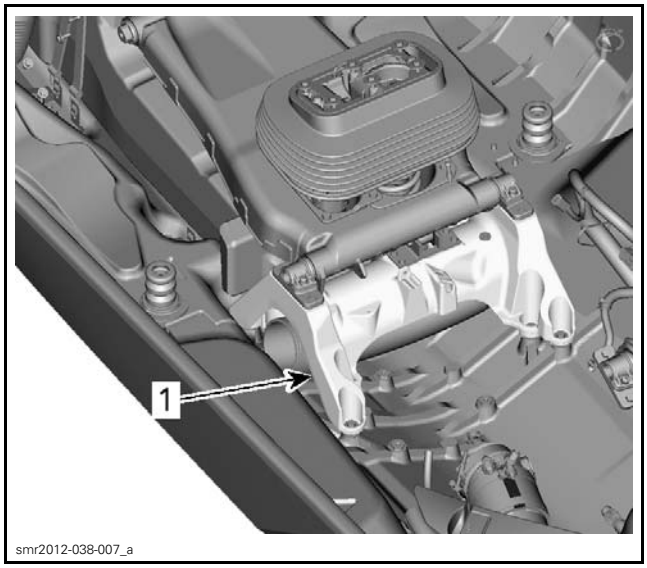

TYPICAL - FIXED DECK REMOVED FOR CLARITY
1. Suspension base

Removing the Suspension Base

1. Refer to the appropriate procedures and remove the following parts:
   – Moving deck
   – Engine
   – Shock absorber and spring.
2. Using a marker, **trace the shape of suspension base at the bottom of the hull** to reposition it at the same place.
3. Remove screws securing both shaft supports to suspension base.

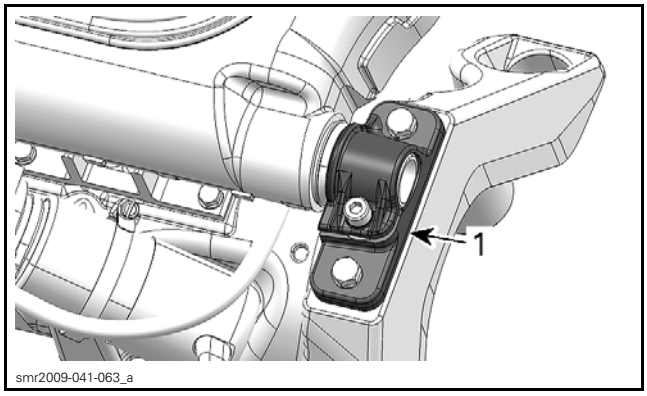

1. Shaft support (one on each side)

4. Remove and discard suspension base screws.

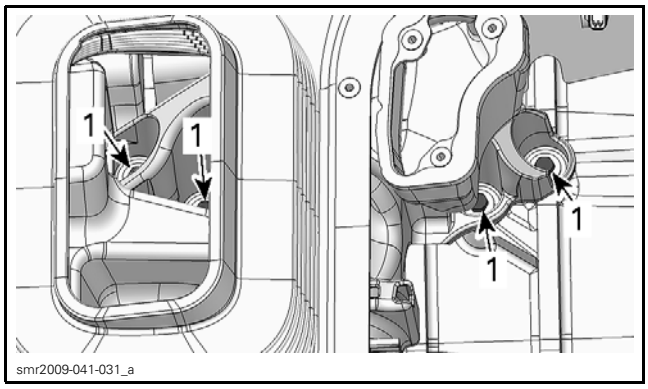

TYPICAL - STARBOARD SIDE
1. Suspension base screws

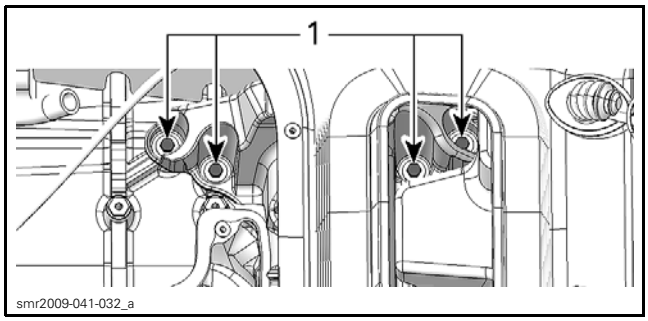

TYPICAL - PORT SIDE
1. Suspension base screws

5. Remove suspension base with the rear vent duct.

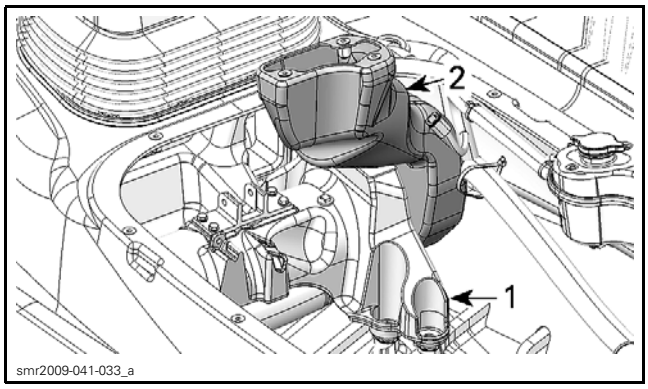

TYPICAL
1. Suspension base
2. Rear vent duct

Installing the Suspension Base

The installation is the reverse of the removal procedure. However, pay attention to the following.

1. Install the suspension base.
   1.1 Position the base in accordance with the reference marks previously drawn at the bottom of the hull.

   NOTE: If no marks are available, see *INSTALLING THE SUSPENSION BASE WITHOUT REFERENCE MARKS*.

   1.2 Install NEW suspension base screws.

   1.3 Tighten suspension base screws to specification as per the following sequence.

TIGHTENING TORQUE	
Suspension base screws	27 N•m (20 lbf•ft)

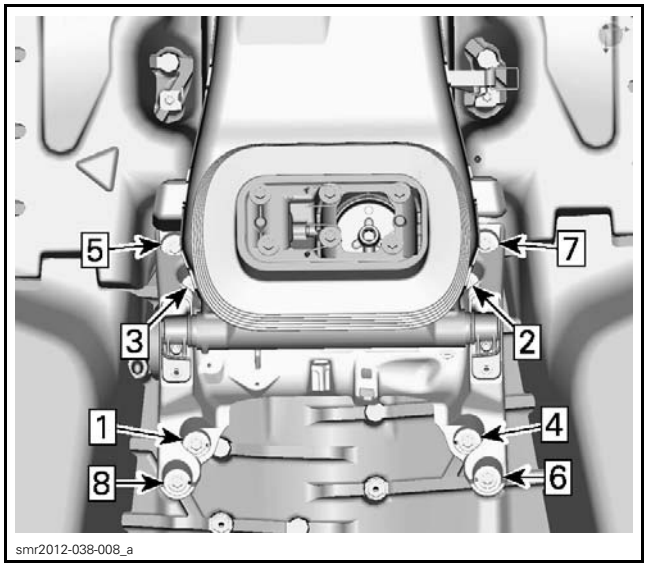

TIGHTENING SEQUENCE

2. Install NEW shaft support screws to secure front suspension arm.
3. Tighten shaft support screws to specification.

TIGHTENING TORQUE	
Shaft support screws	25 N•m (18 lbf•ft)

4. Refer to the appropriate procedures and install all other removed parts.
   – Shock absorber and spring
   – Engine
   – Moving deck.

Installing the Suspension Base without Reference Marks

1. Install the suspension base on watercraft using NEW screws. Do not tighten them yet.
2. Install NEW shaft support screws to secure front suspension arm.
3. Tighten shaft support screws to specification.

TIGHTENING TORQUE	
Shaft support screws	25 N•m (18 lbf•ft)

4. Install lateral supports.
   4.1 Index lateral supports with the front suspension shaft ends. Lateral supports can be inserted in one position only.

4.2 Tighten lateral support screws to specification.

TIGHTENING TORQUE	
Lateral support screws	48 N•m (35 lbf•ft)

5. Align suspension base on watercraft.
   5.1 On both sides, measure the distance between the end of lateral support and fixed deck.

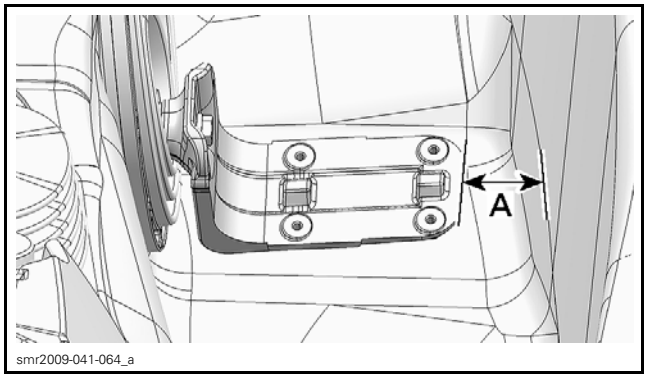

A. Same distance on LH and RH sides

   5.2 If required, move suspension base until both distances are equal.
   5.3 Tighten suspension base screws to specification as per the following sequence.

TIGHTENING TORQUE	
Suspension base screws	27 N•m (20 lbf•ft)

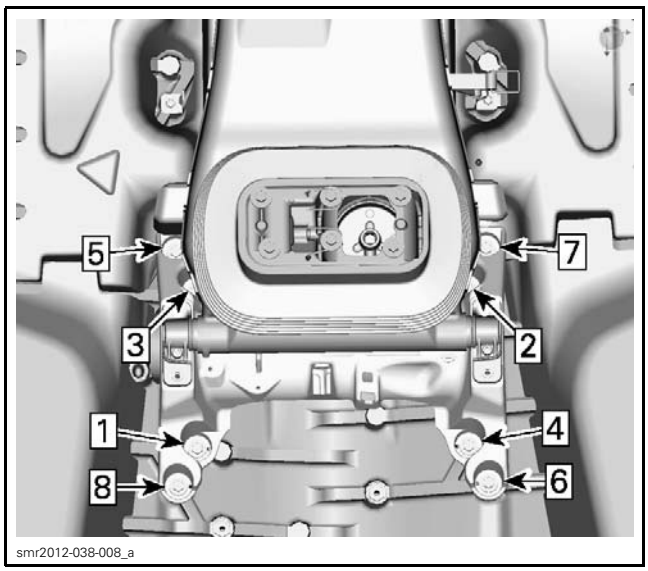

TIGHTENING SEQUENCE

6. Refer to the appropriate procedures and install all other removed parts.
   – Shock absorber and spring
   – Engine
   – Moving deck.

REAR SUSPENSION ARM

Rear Suspension Arm Location

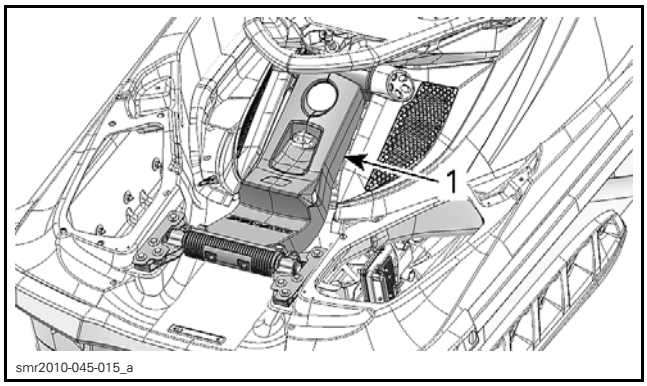

1. Rear suspension arm

Removing the Rear Suspension Arm

1. Open the boarding platform.
2. Remove bolts securing both rear suspension arm covers.

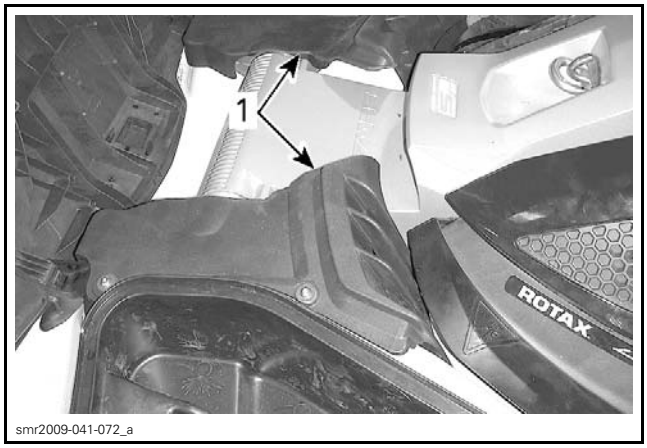

1. Rear suspension arm cover

3. Unclip and remove both lateral rear panels.

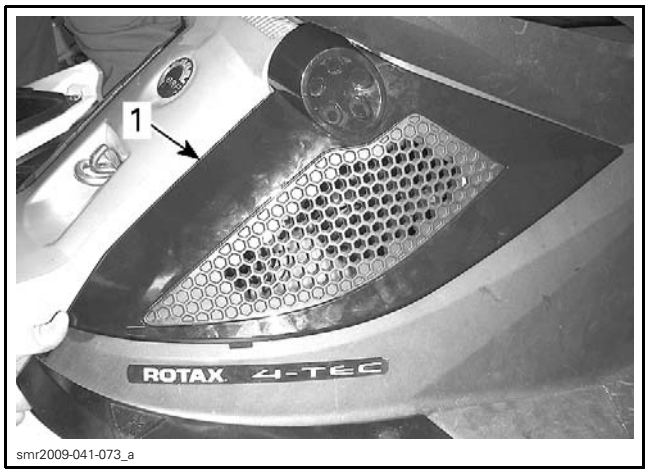

1. RH lateral rear panel

4. Mark position of rear suspension arm brackets for proper reinstallation.
5. Remove and discard screws securing rear suspension arm to fixed deck.

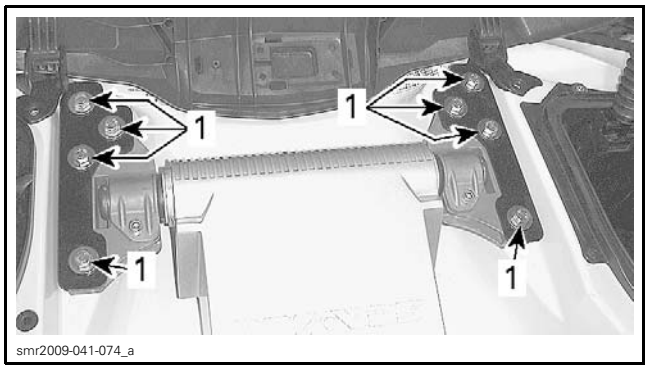

1. Rear suspension arm screws

6. Remove and discard screws securing the top of rear suspension arm.

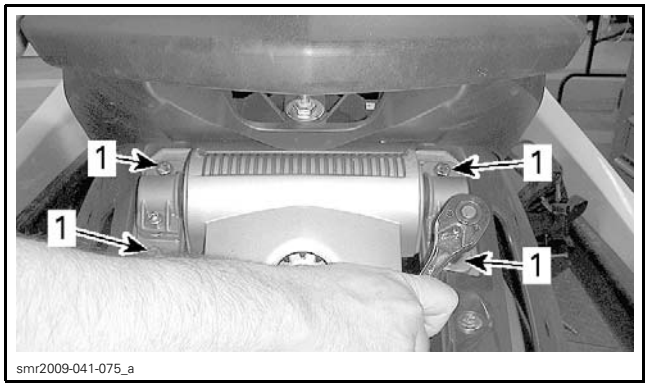

1. Retaining screws

7. Remove the rear suspension arm from watercraft.

Installing the Rear Suspension Arm

1. Using **NEW** screws, install the top of rear suspension arm.

NOTE: If the upper arm shaft or one of its arm shaft support has been removed or loosened, refer to *SUSPENSION ARM SHAFTS* for proper installation procedure.

2. Tighten upper arm support screws to specification.

TIGHTENING TORQUE	
Upper arm support screws	25 N•m (18 lbf•ft)

3. Carefully lower and secure the rear suspension arm to the fixed deck.
   3.1 Position the rear suspension arm brackets in accordance with the reference marks previously draw on fixed deck.

   NOTICE **If no mark was traced, refer to *INSTALLING THE REAR SUSPENSION ARM WITHOUT REFERENCE MARKS* for proper procedure to install and align the rear suspension arm.**

   3.2 Install **NEW** screws to secure rear suspension arm brackets.
   3.3 Tighten rear suspension arm screws to specification.

TIGHTENING TORQUE	
Rear suspension arm screws	25 N•m (18 lbf•ft)

Installing the Rear Suspension Arm Without Reference Marks

1. Lower the rear suspension arm on fixed deck.
2. Position the square openings of rear suspension arm brackets so that the threaded inserts in fixed deck are centered.

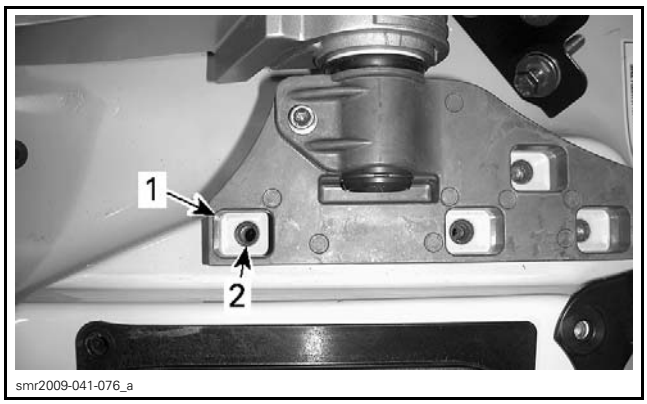

1. Square opening
2. Threaded insert

3. On each bracket, install the retaining plate and one screw.

4. Install a weight of 90 kg (200 lb) on vehicle to lower the moving deck.
5. Check moving deck position in comparison to fixed deck.
   5.1 Check the gap between moving deck wipers and fixed deck. It should be the same on both sides.
   5.2 Check front and rear gaps. Moving deck should be able to move without having contact with the fixed deck.
   5.3 Reposition rear suspension arm brackets on fixed deck until positioning of moving deck is satisfactory.
6. Secure the rear suspension arm to the fixed deck.
   6.1 Install NEW screws to secure rear suspension arm brackets.
   6.2 Remove and replace screws installed during alignment.
   6.3 Tighten rear suspension arm screws to specification.

TIGHTENING TORQUE	
Rear suspension arm screws	25 N•m (18 lbf•ft)

SUSPENSION ARM SHAFTS

Removing the Front Suspension Arm Shaft

1. Remove the *FRONT SUSPENSION ARM*, see procedure in this subsection.
2. Remove and discard socket screws securing supports to shaft.
3. Separate arm shaft supports from arm shaft.

Installing the Front Suspension Arm Shaft

1. Insert shaft in the suspension arm.
2. Install a support on each end of shaft.
3. Secure the LH arm shaft support to suspension base using NEW support screws.

NOTE: Make sure to insert the support pin into suspension base hole.

4. Tighten the LH support screws to specification.

TIGHTENING TORQUE	
Shaft support screws	25 N•m (18 lbf•ft)

5. Apply a force on the RH support to move it on the left side.

NOTICE **Make sure arm shaft is fully inserted, it must lean against the arm shaft support.**

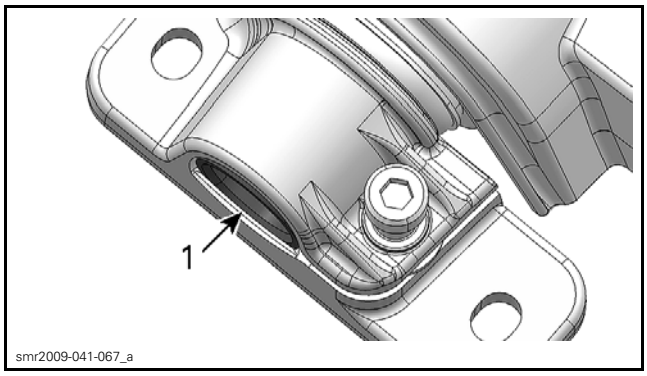

1. Arm shaft against its support

6. Install NEW support screws and tighten them to specification.

TIGHTENING TORQUE	
Shaft support screws	25 N•m (18 lbf•ft)

7. Secure both supports to shaft using NEW socket screws.
8. Tighten shaft screws to specification.

TIGHTENING TORQUE	
Shaft screws	12 N•m (106 lbf•**in**)

Removing the Rear Suspension Arm Upper Shaft

1. Unclip and remove both lateral rear panels.

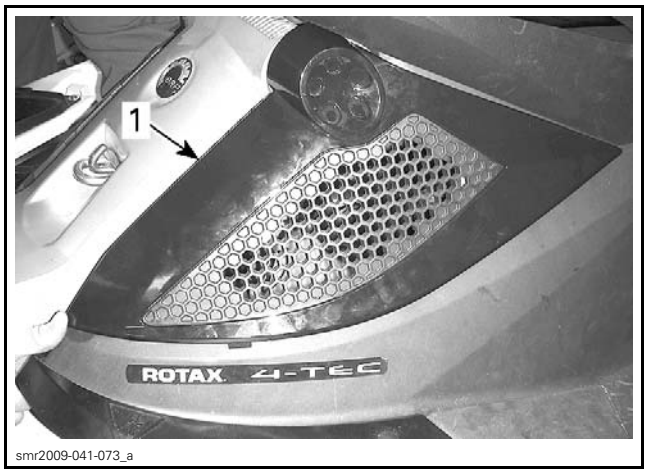

1. RH lateral rear panel

2. Remove arm shaft support screws.

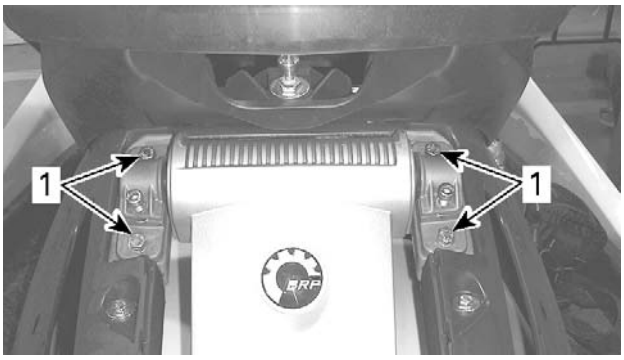

smr2009-041-077_a

1. *Arm shaft support screws*

3. Remove and discard socket screws securing supports to arm shaft.
4. Separate arm shaft support from arm shaft.

Installing the Rear Suspension Arm Upper Shaft

1. Insert shaft in the rear arm.
2. Install a support on each end of shaft.
3. Secure the LH support to rear arm holder using **NEW** support screws.

NOTE: Make sure to insert the support pin into holder hole.

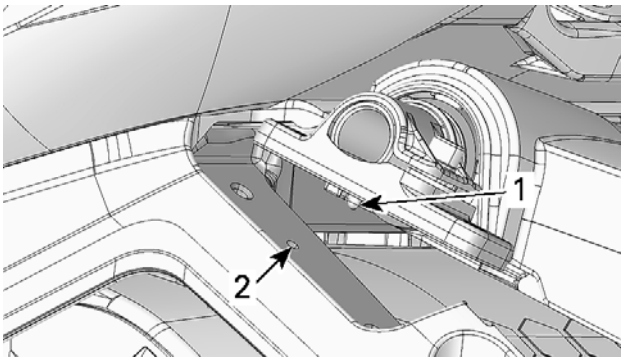

smr2009-041-078_a

1. *Support pin*
2. *Holder hole*

4. Tighten the LH support screws to specification.

TIGHTENING TORQUE	
Upper arm support screws	25 N•m (18 lbf•ft)

5. Apply a force on the RH support to move it to the left side.

NOTE: A bar clamp can be used to compress both supports together.

NOTICE **Make sure arm shaft is fully inserted, it must lay flush against the arm shaft support.**

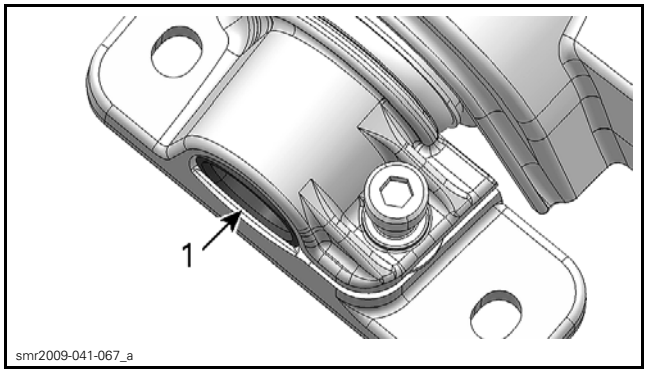

smr2009-041-067_a

1. *Arm shaft against its support*

6. Install **NEW** support screws and tighten them to specification.

TIGHTENING TORQUE	
Upper arm support screws	25 N•m (18 lbf•ft)

7. Secure both supports to shaft using **NEW** socket screws.
8. Tighten upper shaft screws to specification.

TIGHTENING TORQUE	
Upper shaft screws	12 N•m (106 lbf•**in**)

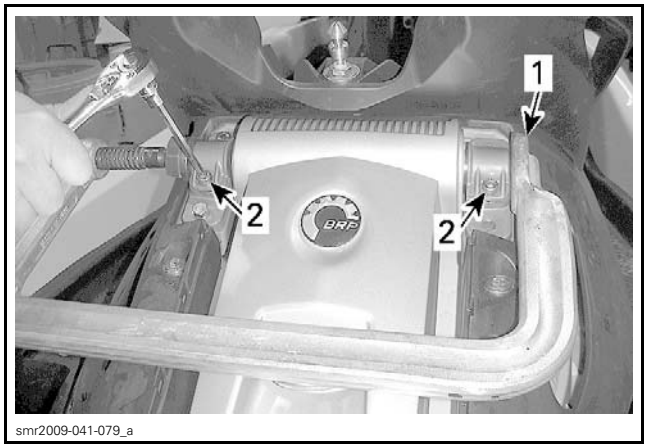

smr2009-041-079_a

1. *Bar clamp*
2. *New socket screws*

Removing the Rear Suspension Arm Lower Shaft

1. Open the boarding platform.
2. Remove bolts securing both rear suspension arm covers.

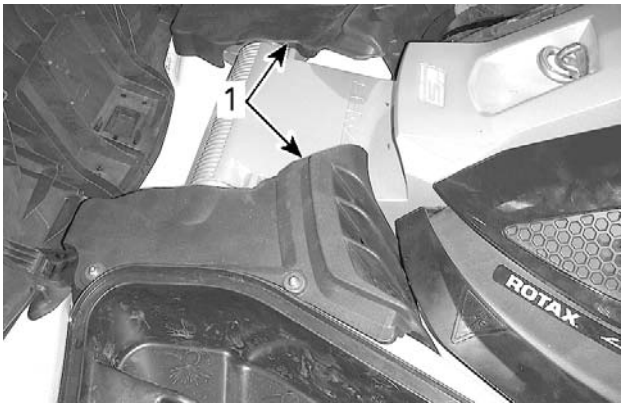

smr2009-041-072_a

1. *Rear suspension arm cover*

3. **Mark position of rear suspension arm brackets for proper reinstallation**.
4. Remove and discard screws securing rear suspension arm to fixed deck.

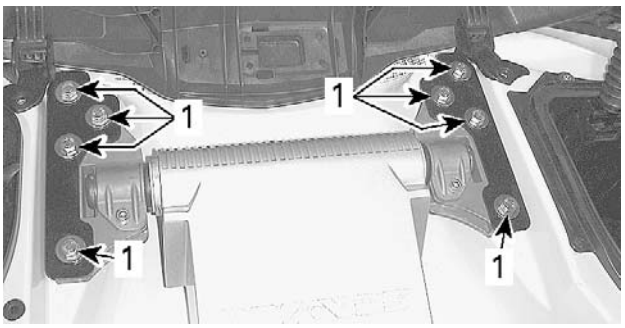

smr2009-041-074_a

1. *Rear suspension arm screws*

5. Remove and discard socket screws securing rear brackets to arm shaft ends.

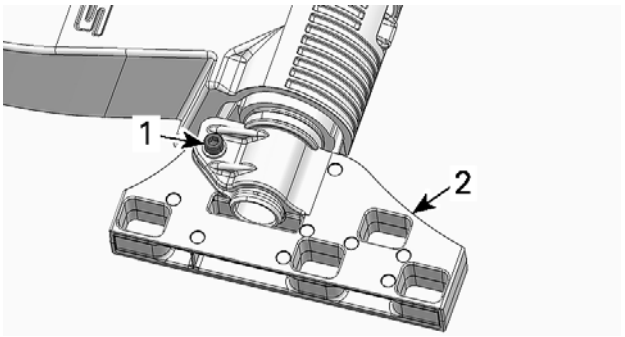

smr2009-041-069_a

1. *Socket screw*
2. *LH rear bracket*

6. Press one rear bracket against the suspension arm bushing and remove the circlip. Repeat for the other side.

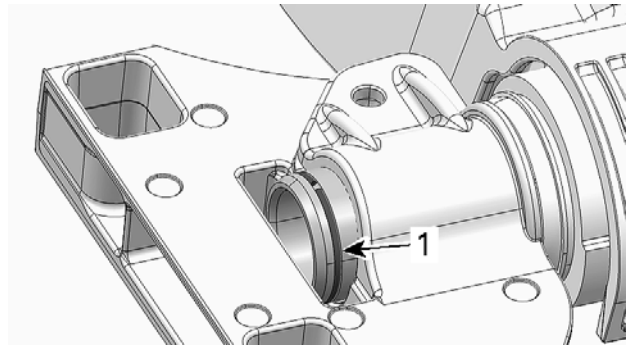

smr2009-041-070_a

1. *Circlip*

Installing the Rear Suspension Arm Lower Shaft

1. When reassembly the rear bracket on shaft end, press bracket on bushing to install the circlip.
2. When both brackets are installed on shaft, pull brackets outside to position circlips against brackets.

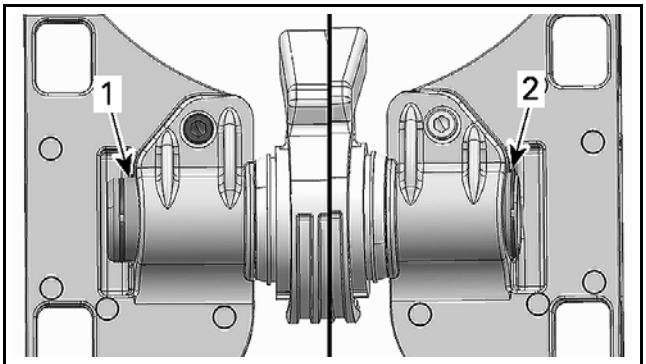

smr2009-041-071_a

1. *Incorrect installation*
2. *Proper installation*

3. Lower the rear suspension arm on fixed deck.
4. Tighten **NEW** socket screws to specification.

TIGHTENING TORQUE	
Lower shaft screws	10 N•m (89 lbf•**in**)

5. Refer to *REAR ARM* for reinstallation.

ADJUSTABLE SUSPENSION (aS)

SERVICE TOOLS

Description	Part Number	Page
SUPERTANIUM DRILL BIT 3/16"	529 031 800	12

FRONT SUSPENSION ARM

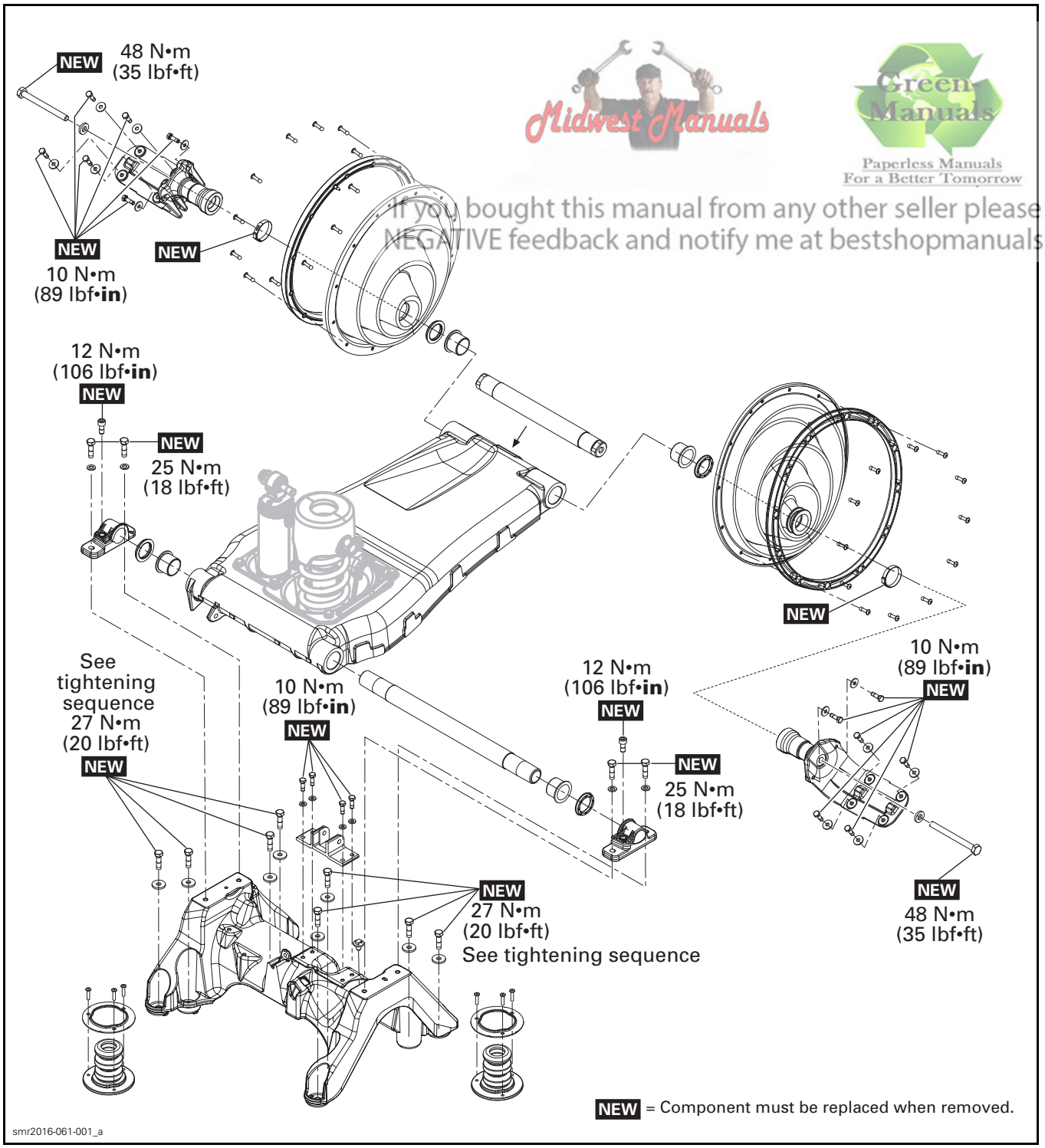

Midwest Manuals
Green Manuals
Paperless Manuals
For a Better Tomorrow
If you bought this manual from any other seller please leave them
NEGATIVE feedback and notify me at bestshopmanuals@gmail.com

SHOCK ABSORBER

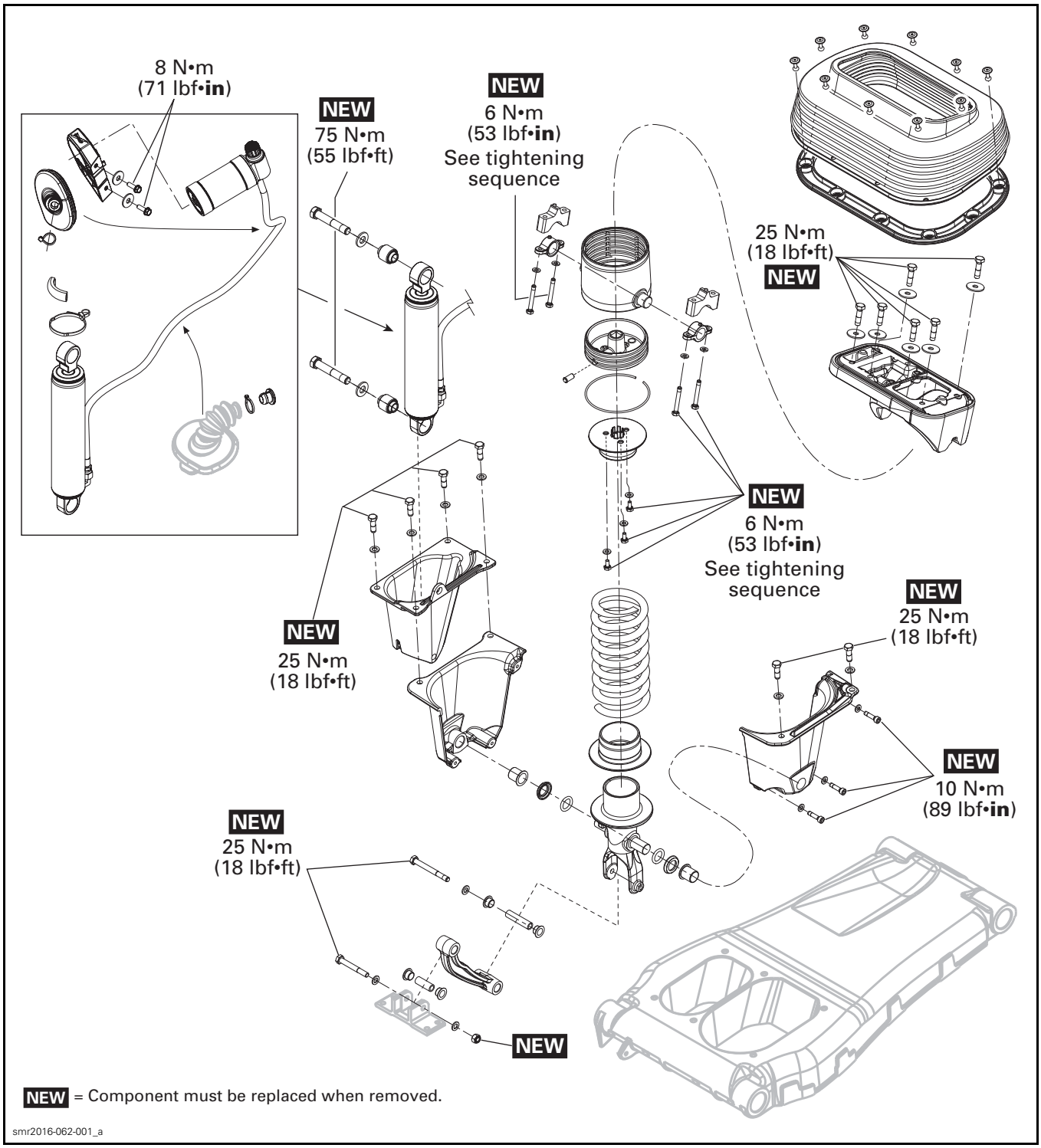

REAR SUSPENSION ARM

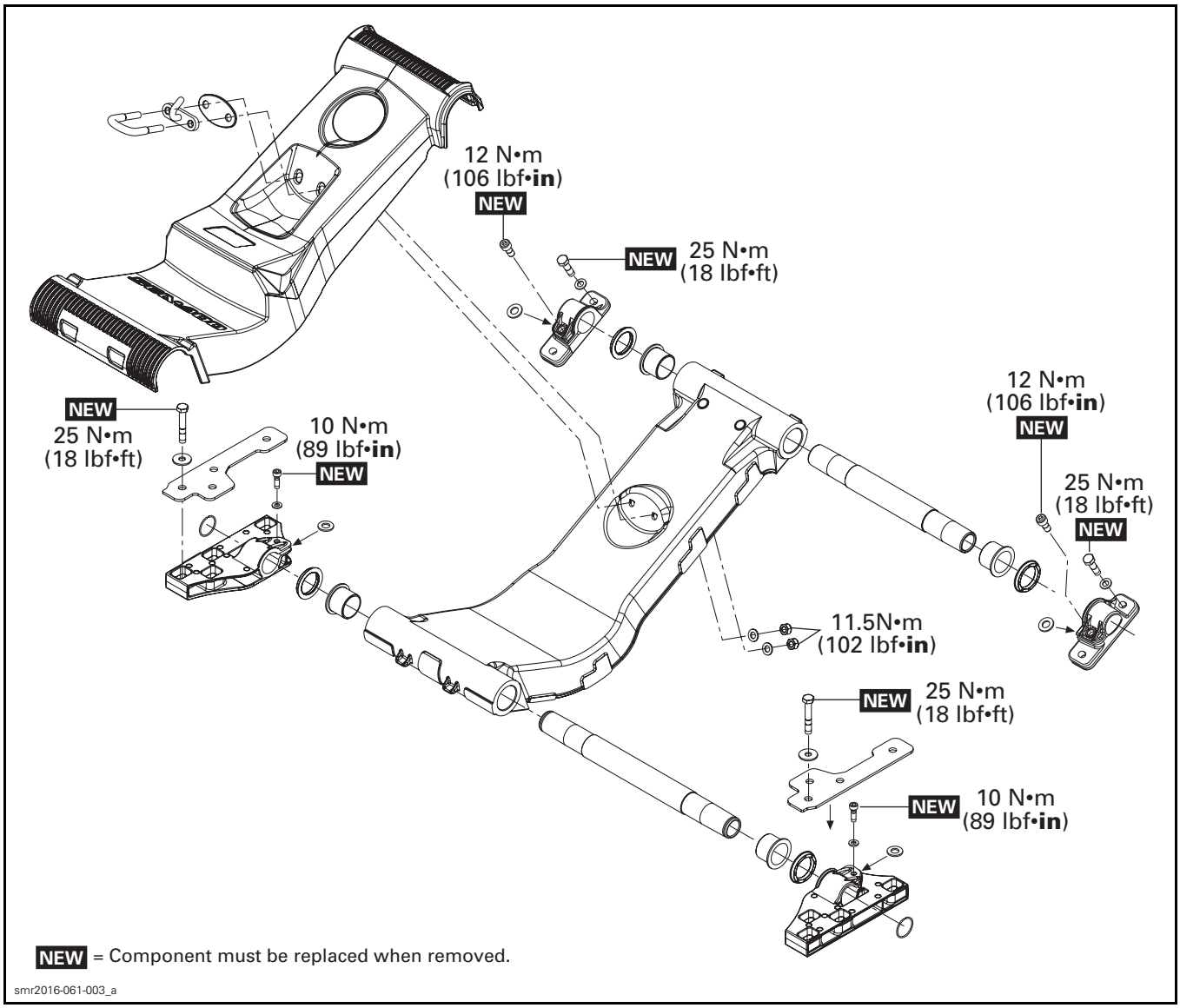

GENERAL

SYSTEM DESCRIPTION

The adjustable Suspension (aS) allows the moving deck to move independently from the fixed deck, isolating rider and passenger from the impact of rough water.

With the aS feature, the moving deck may be adjusted mechanically to absorb (dampen) water shocks according to the driver riding style and water conditions.

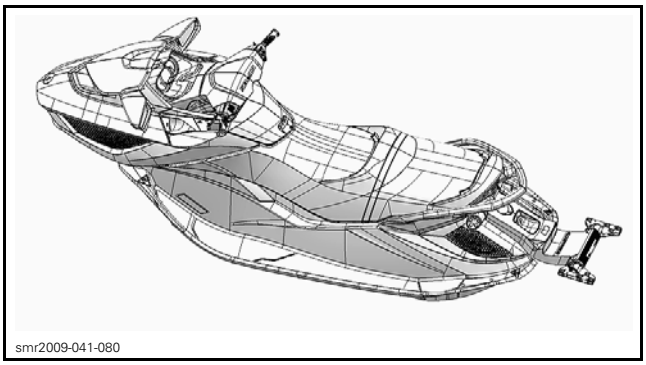
smr2009-041-080

TYPICAL - MOVING DECK

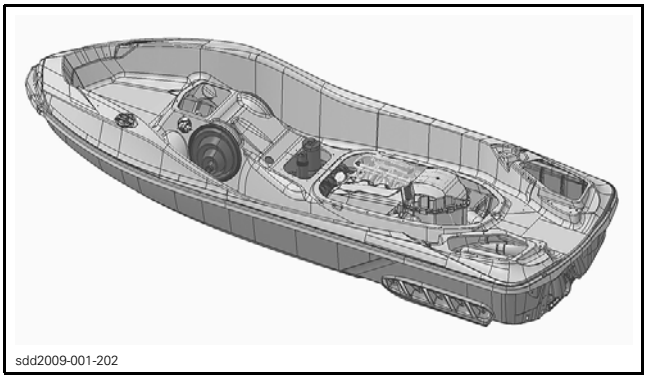
sdd2009-001-202

TYPICAL - FIXED DECK

Adjusting the Spring Preload

The spring preload can be easily adjusted using a 1/2" drive ratchet wrench with an extension.

The spring preload adjuster is located under the seat.

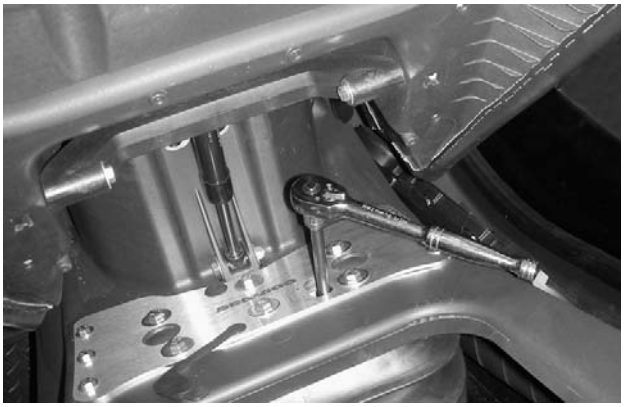
smr2011-037-001

SPRING PRELOAD ADJUSTMENT

RIDERS TOTAL WEIGHT (KG/LB)	NBR OF CLICKS ON SPRING ADJUSTER (CLOCKWISE*)
57 kg (125 lb)	0
73 kg (160 lb)	2
89 kg (195 lb)	4
105 kg (230 lb)	6
120 kg (265 lb)	8
136 kg (300 lb)	10
152 kg (335 lb)	12
168 kg (370 lb)	14
184 kg (405 lb)	16
200 kg (440 lb)	18
* 0 is set at fully unscrewed position (counterclockwise).	

Adjusting the Damping

The aS Suspension damping may be personally adjustable according to the driving preferences and water conditions.

Damping adjustment is carried out via the remote nitrogen reservoir in the glove box.

A blue knob located in glove box allows damper adjustment for this purpose.

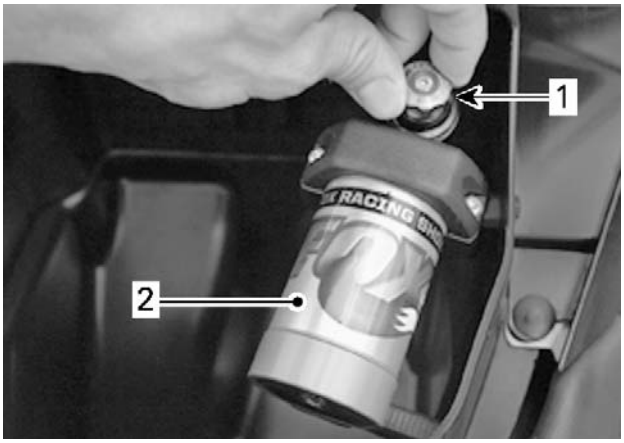

smo2011-002-006_a

1. *Blue knob*
2. *Nitrogen gas damper*

TYPICAL CONDITIONS	NBR OF CLICKS ON DAMPER ADJUSTER (CLOCKWISE*)
Calm water	0
	5
Rough water	10
	15
Offshore	20
* 0 is set at fully unscrewed position (counterclockwise).	

NOTE: These adjustments are provided as guidelines to ensure optimum suspension performance. Personal preference may dictate different settings than those recommended.

TROUBLESHOOTING

DIAGNOSTIC GUIDELINES

The following is provided to help in diagnosing the probable source of troubles. It is a guideline and it should not be assumed to list all possible problems.

SUSPENSION MOVES ERRATICALLY

1. **Defective shock absorber.**
   - *Replace the shock absorber.*
2. **Broken spring.**
   - *Replace spring.*

SUSPENSION NOISE (DURING A TURN)

1. **Front or rear suspension arm shaft supports position.**
   - *Supports must be flushed against both ends of shaft. Reposition shaft in its supports.*
2. **Worn arm shaft bushings.**
   - *Check front and rear arm shaft bushings condition and replace as required.*
3. **Snap rings on both sides of the rear lower arm shaft are not properly positioned.**
   - *Reposition shaft in its supports. Refer to SUSPENSION ARM SHAFTS.*

SUSPENSION NOISE (FRONT OF SEAT)

1. **Holder retaining screws are loose.**
   - *Tighten shock absorber holder screws to recommended torque.*
2. **Shock absorber screws are loose.**
   - *Tighten shock absorber screws to recommended torque.*

SUSPENSION BOTTOMS HARD

1. **Spring out of specification or broken.**
   - *Replace spring.*
2. **Shock absorber is damaged.**
   - *Check shock absorber resistance. Replace shock absorber.*
3. **Bump stops damaged or worn.**
   - *Replace both bump stops.*

PROCEDURES

SHOCK ABSORBER

Shock Absorber Location

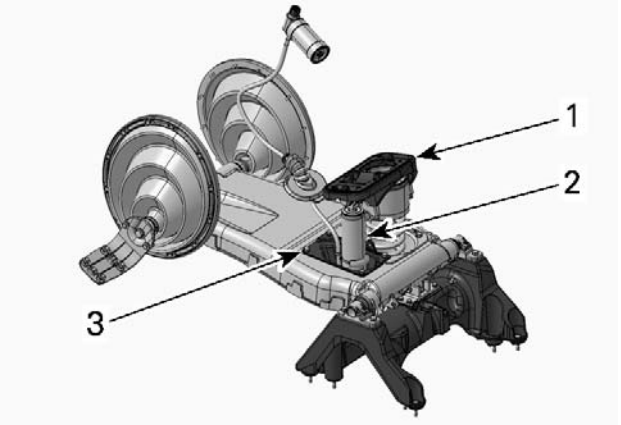

smr2011-037-002_a

1. *Mounting plate*
2. *Shock absorber*
3. *Shock holder*

Removing the Shock Absorber

1. Remove moving deck. Refer to *BODY (GTX, RXT AND WAKE PRO SERIES)* subsection.
2. Remove shock absorber upper bolt.

smr2011-037-003_a

1. *Shock absorber upper bolt*

3. Remove mounting plate by pulling it upwards.

smr2011-037-004_a

MOUNTING PLATE REMOVAL

4. Remove spring and lower spring bushing.

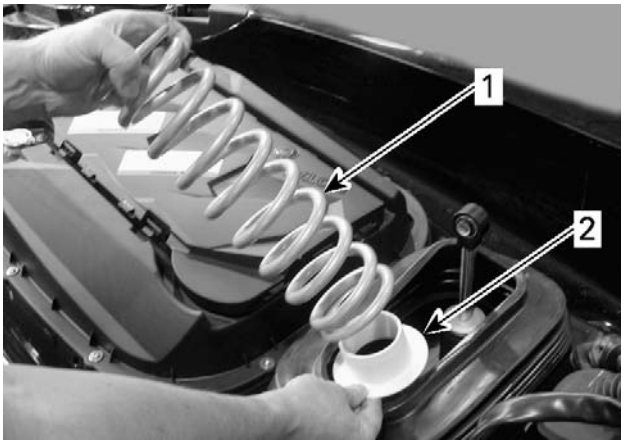

smr2011-037-010_a

1. *Spring*
2. *Lower spring bushing*

5. Remove shock holder retaining screws.

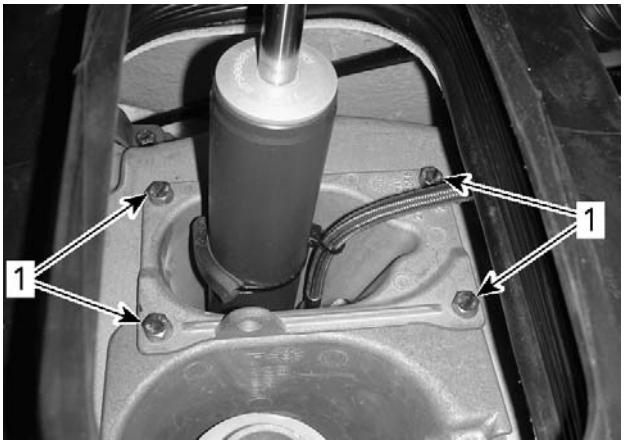

smr2011-037-005_a

TYPICAL
1. *Shock holder retaining screws*

6. Remove locking tie securing remote reservoir hose.

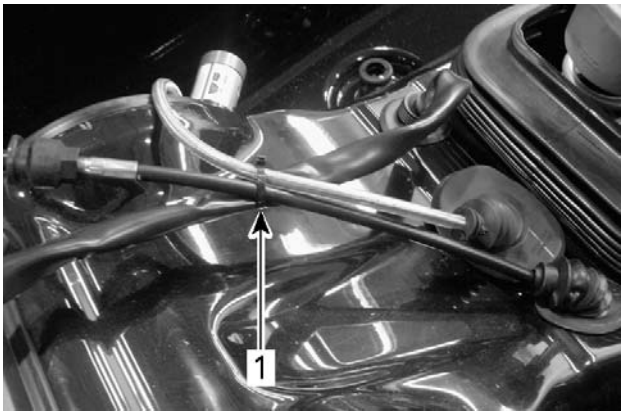

smr2011-037-006_a

1. *Locking tie securing remote reservoir hose*

7. Remove bellows of remote reservoir hose from deck.
8. Insert remote reservoir into deck hole.

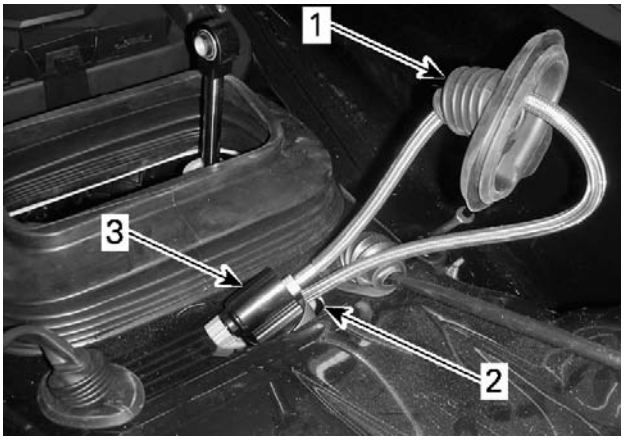

smr2011-037-007_a

1. *Bellows of remote reservoir hose*
2. *Deck hole*
3. *Remote reservoir*

9. Remove shock absorber and remote reservoir.

smr2011-037-008

SHOCK ABSORBER REMOVAL

10. Remove shock holder from shock absorber.

smr2011-037-009_a

1. *Shock absorber lower bolt*

Inspecting the Shock Absorber

NOTE: Because of gas pressure, strong resistance is felt when compressing shock.

To inspect shock operation, or if suspecting an internal leak between oil chamber and gas chamber, check shock as follows:

1. Grab the shock absorber body firmly and press the rod end against a firm surface.
   - 1.1 Verify the compression stroke when the rod is fully extended.
   - 1.2 Make sure that shock absorber rod can be completely inserted in the shock body.
2. The shock should extend unassisted. Rod must come out at a steady speed.

If any problem is detected, replace the shock absorber.

Installing the Shock Absorber

The installation is the reverse of the removal procedure. However, pay attention to the following.

Secure shock absorber using **NEW** bolts.

Tighten shock absorber bolts to specification.

TIGHTENING TORQUE	
Shock absorber bolt	75 N•m (55 lbf•ft)

Install **NEW** shock holder screws.

Tighten shock holder screws to specification.

TIGHTENING TORQUE	
Shock holder screw	25 N•m (18 lbf•ft)

SPRING

Spring Location

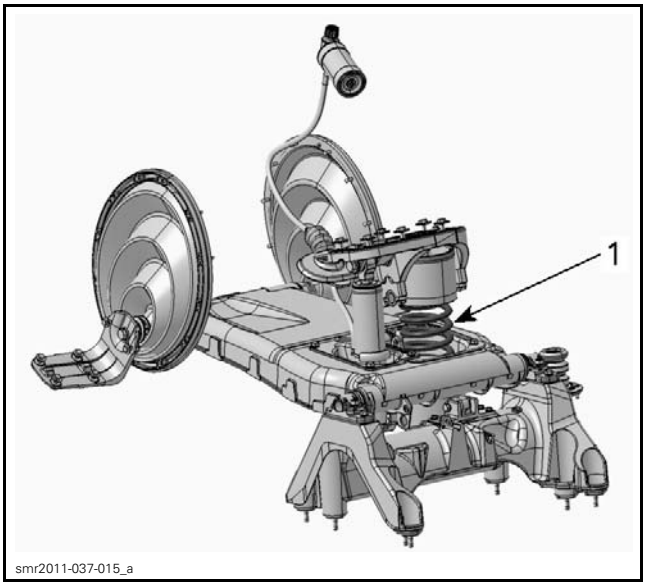

1. Spring

Removing the Spring

1. Remove moving deck. Refer to *BODY (GTX, RXT AND WAKE PRO SERIES)* subsection.
2. Remove shock holder from its location. Refer to *SHOCK ABSORBER* in this subsection.

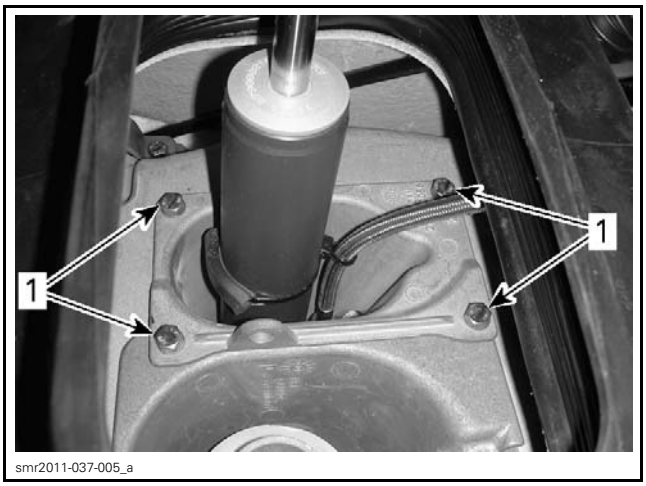

TYPICAL
1. Shock holder retaining screws

3. Move shock holder aside.
4. Remove spring holder retaining screws.

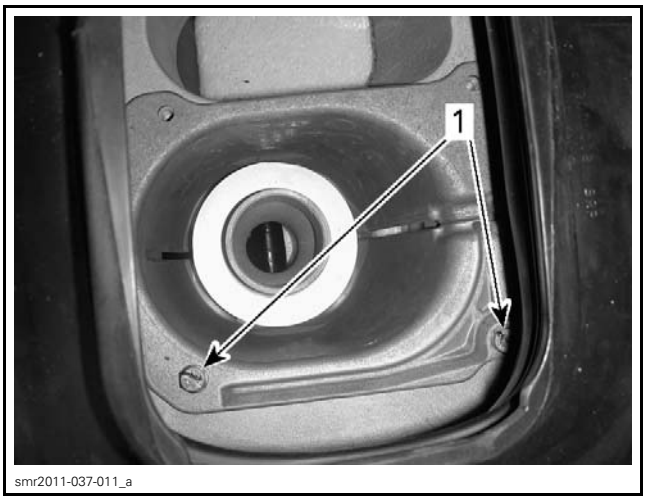

1. Spring holder retaining screws

5. Remove screw securing spring holder to link arm.

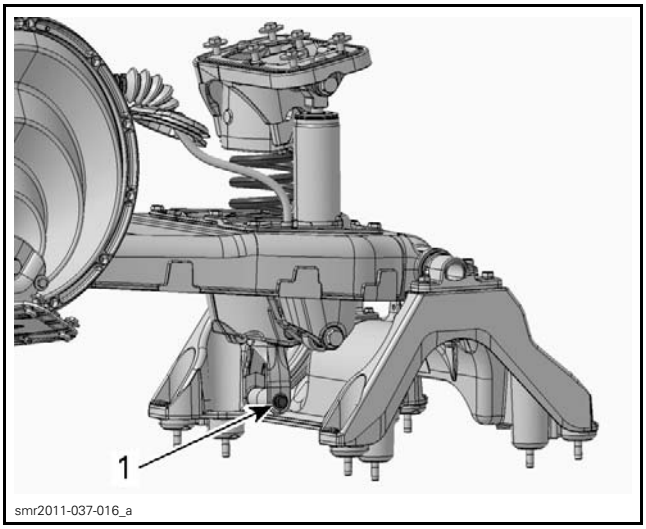

TYPICAL - SOME PARTS REMOVED FOR CLARITY
1. Screw securing spring holder to link arm

6. Remove spring holder.

SPRING HOLDER REMOVAL

Inspecting the Spring

Inspect spring and replace if one of the following damage is detected:

– Crack in the paint
– Rust
– Other visible damages.

NOTE: If rust is limited to a 1/4 of the first coil, the spring should not be replaced.

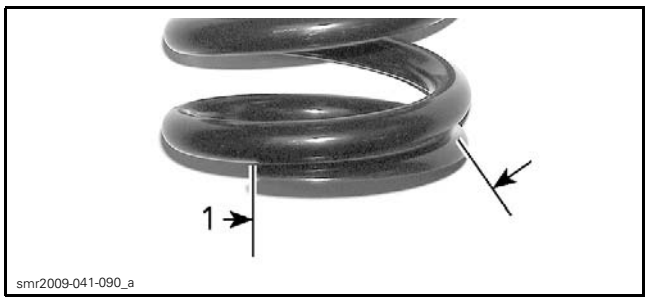

1. Zone where presence of rust is normal

Check the curve line of spring.

SPRING SHAPE	
Maximum	7 mm (9/32 in)

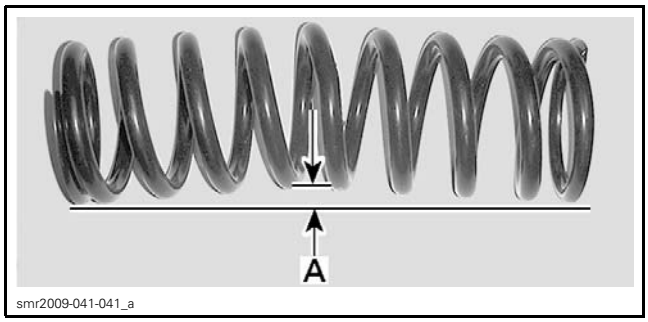

A. 7 mm (9/32 in) maximum

Replace spring if out of specification.

Inspecting the Spring

The installation is the reverse of the removal procedure. However, pay attention to the following.

Secure shock absorber using NEW bolts.

Tighten shock absorber bolts to specification.

TIGHTENING TORQUE	
Shock absorber bolt	75 N•m (55 lbf•ft)

Install NEW shock holder screws and spring holder screws.

Tighten shock and spring holder screws to specification.

TIGHTENING TORQUE	
Shock holder screw	25 N•m (18 lbf•ft)
Spring holder screw	25 N•m (18 lbf•ft)

If spring supports were disassembled, pay attention to the following.

Install NEW upper spring support screws.

Tighten upper spring support screws to specification as per the following sequence.

TIGHTENING TORQUE	
Upper spring support screw	6 N•m (53 lbf•**in**)

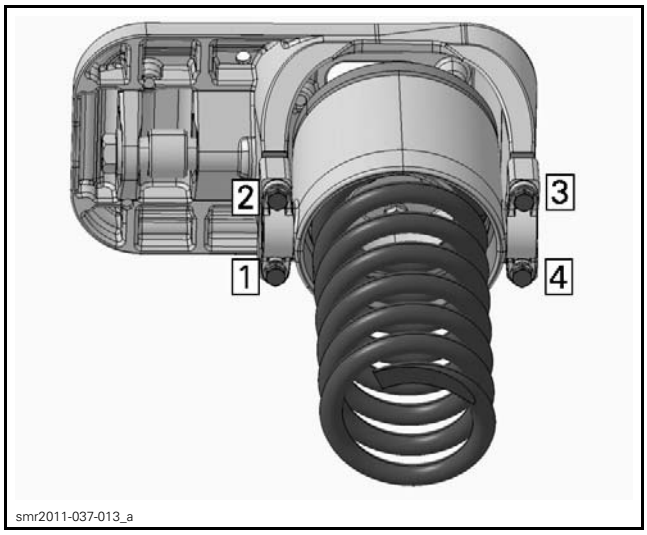

TIGHTENING SEQUENCE

Tighten upper wear ring retaining screws to specification as per the following sequence.

TIGHTENING TORQUE	
Upper wear ring retaining screw	6 N•m (53 lbf•**in**)

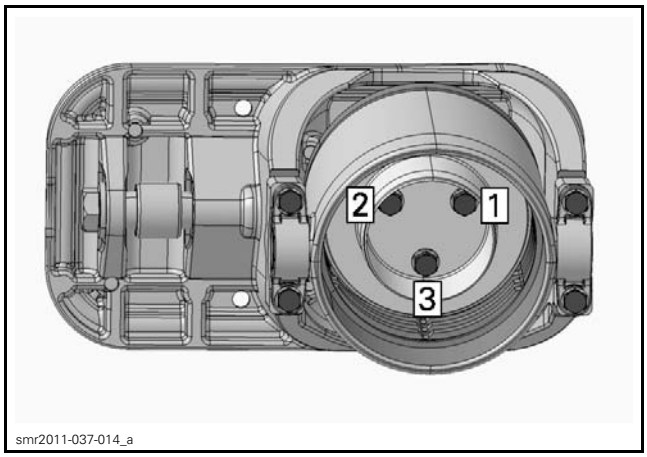

TIGHTENING SEQUENCE

LINK ARM

Link Arm Access

Refer to *BODY (GTX, RXT AND WAKE PRO SERIES)* subsection and remove:

– Moving deck
– Deck extension.

Removing the Link Arm

1. Remove spring holder. Refer to *REMOVING THE SPRING* in this subsection.
2. Remove link arm lower retaining bolt.

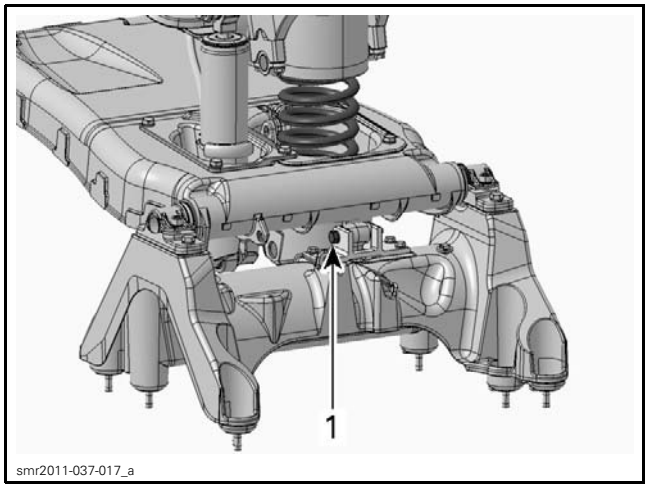

TYPICAL - SOME PARTS REMOVED FOR CLARITY
1. Link arm lower retaining bolt

Installing the Link Arm

The installation is the reverse of the removal procedure. However, pay attention to the following.

Secure link arm using **NEW** bolts.

Tighten link arm bolts to specification.

TIGHTENING TORQUE	
Link arm bolt	25 N•m (18 lbf•ft)

LATERAL SUPPORT

Lateral Support Location

The lateral supports are located on both side of the fixed deck to support the moving deck.

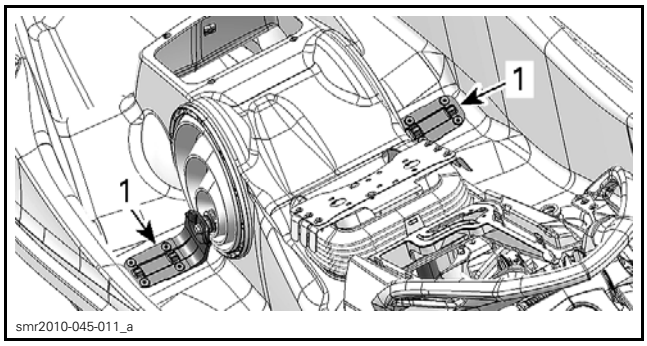

1. Lateral supports

Removing the Lateral Support

NOTE: The following instruction can be used for RH or LH support.

1. Remove the moving deck. Refer to *BODY (GTX, RXT AND WAKE PRO SERIES)* subsection.
2. Cut the Oetiker clamp retaining lateral bellows to lateral support.

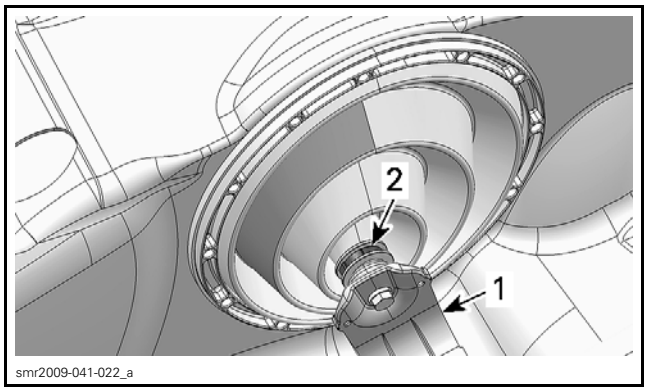

1. Lateral support
2. Oetiker clamp

3. Remove the lateral support screw.

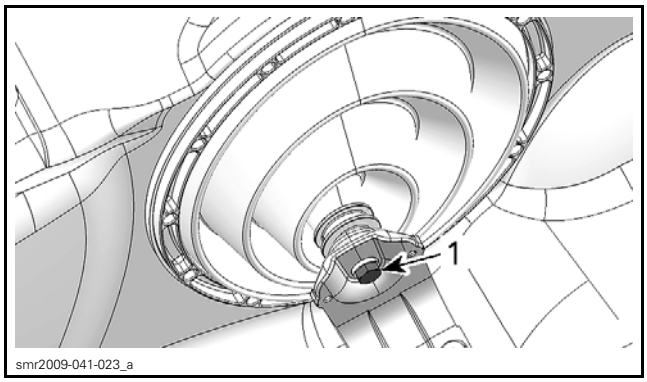

1. Lateral support screw

4. Remove lateral support from lateral bellows.

Installing the Lateral Support

The installation is the reverse of the removal procedure. However, pay attention to the following.

Apply soapy water solution on bellows opening and insert the lateral support.

Index lateral supports with the front suspension shaft ends. Lateral supports can be inserted in one position only.

Install **new** lateral support screw.

Tighten lateral support screw to specification.

TIGHTENING TORQUE	
Lateral support screw	48 N•m (35 lbf•ft)

Install a **new** Oetiker clamp. Position the ear of clamp rearwards.

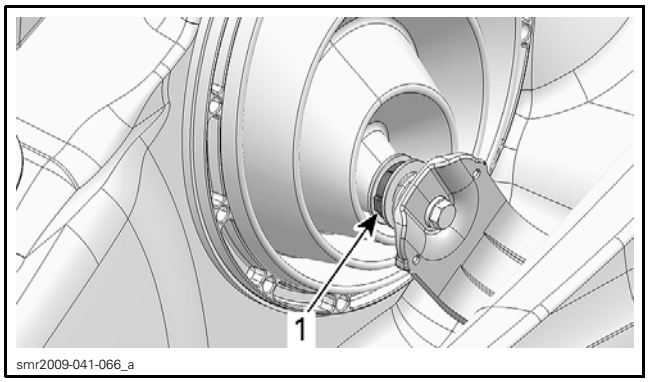

RH SIDE SHOWN
1. Ear of clamp rearwards

LATERAL BELLOWS

Lateral Bellows Location

The lateral bellows are located on each side of the fixed deck.

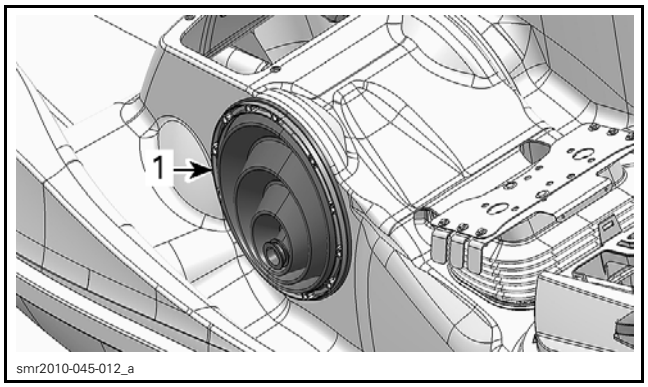

1. LH lateral bellows shown

Removing the Lateral Bellows

1. Remove lateral support screw.

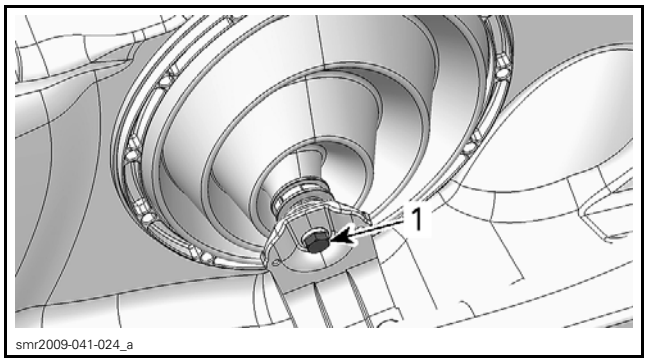

1. Lateral support screw

2. Detach lateral support from suspension shaft.
3. Using the SUPERTANIUM DRILL BIT 3/16" (P/N 529 031 800), remove all rivets (12) securing the lateral bellows ring to body.

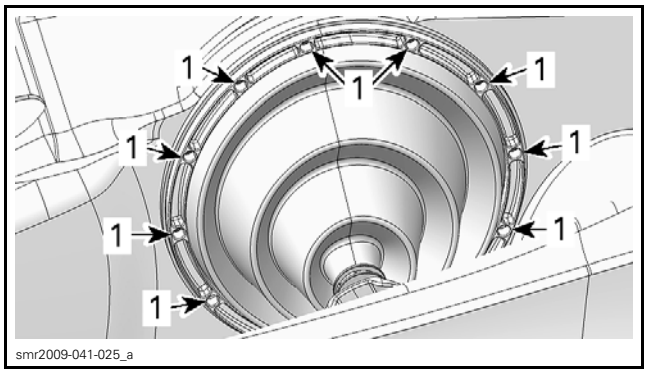

1. Rivet location

4. Remove lateral ring.
5. Cut Oetiker clamp securing bellows to lateral support.
6. Separate lateral support from bellows.

Installing the Lateral Bellows

The installation is the reverse of the removal procedure. However, pay attention to the following.

Apply soapy water solution on bellows opening and insert the lateral support.

Index suspension shaft with the lateral support. The lateral support can be inserted in one position only.

Install the retaining ring. Align the ring pin with holes in bellows and body.

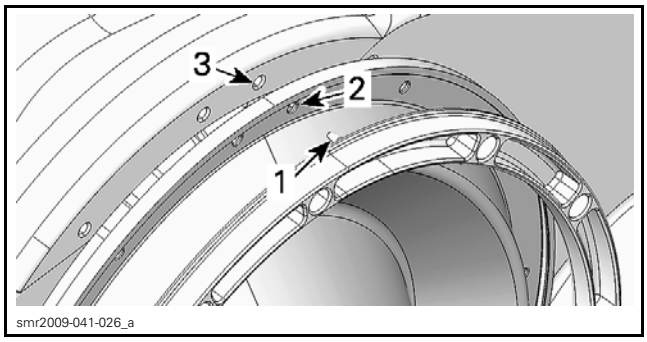

1. *Ring pin*
2. *Bellows alignment hole*
3. *Body hole*

Install new rivets. If the head of rivet tool cannot be inserted in ring opening, use the sleeve (P/N 707 000 181) to offset the rivet tool and well lean the rivet head against ring.

Index lateral supports with the front suspension shaft ends. Lateral supports can be inserted in one position only.

Install **new** lateral support screw.

Tighten lateral support screw to specification.

TIGHTENING TORQUE	
Lateral support screw	48 N•m (35 lbf•ft)

Install a new Oetiker clamp. Position the ear of clamp rearwards.

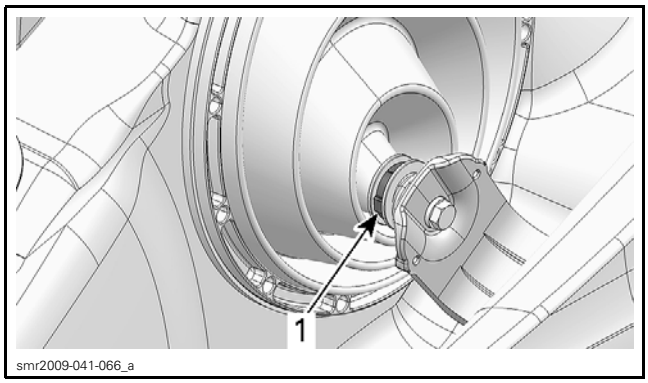

RH SIDE SHOWN
1. *Ear of clamp rearwards*

FRONT SUSPENSION ARM

Front Suspension Arm Location

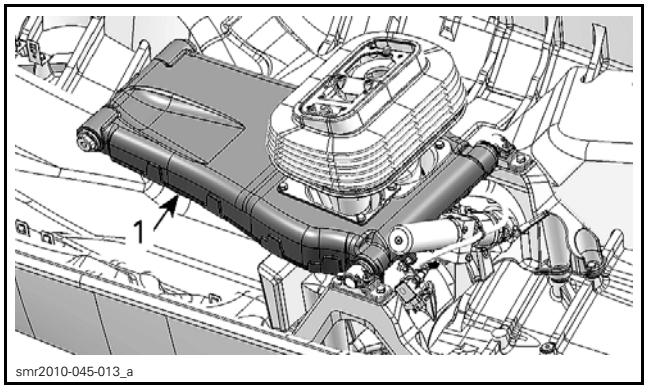

TYPICAL - FIXED DECK REMOVED FOR CLARITY
1. *Front suspension arm*

Removing the Front Suspension Arm

1. Remove the moving deck. Refer to *BODY (GTX, RXT AND WAKE PRO SERIES)* subsection.
2. Remove the engine. Refer to *ENGINE REMOVAL AND INSTALLATION* subsection.
3. Remove both lateral support screws.

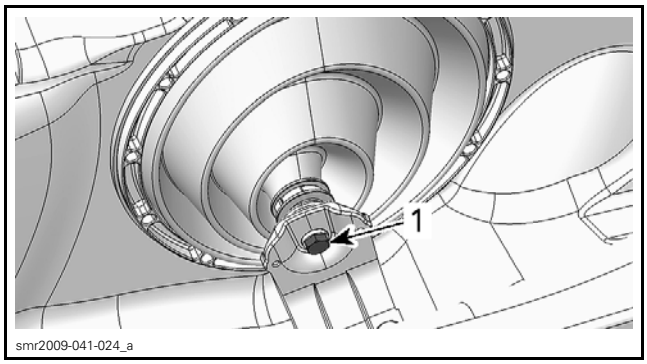

RH SIDE SHOWN
1. *Lateral support screw*

4. Detach lateral supports from suspension arm shaft.
5. Remove screws securing both shaft supports to suspension base.

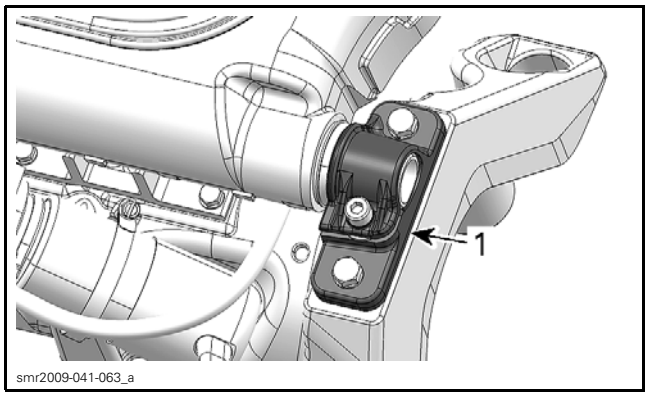

1. *Shaft support (one on each side)*

6. Move front suspension arm rearward to remove it.

Installing the Front Suspension Arm

The installation is the reverse of the removal procedure. However, pay attention to the following.

If a shaft support has been loosened from the suspension arm shaft, see *SUSPENSION ARM SHAFTS* for proper installation procedure.

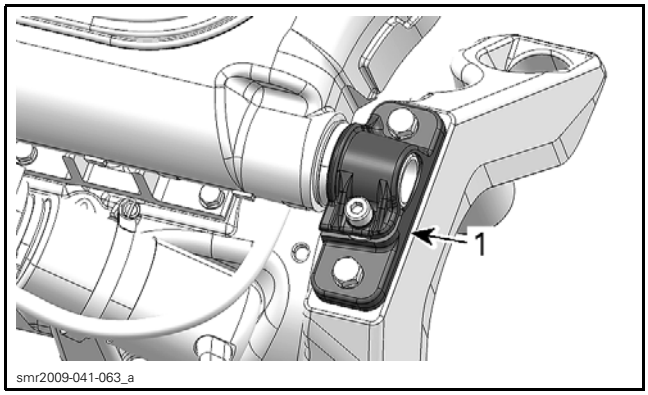

1. *Shaft support (one on each side)*

Install **NEW** shaft support screws.

Tighten shaft support screws to specification.

TIGHTENING TORQUE	
Shaft support screws	25 N•m (18 lbf•ft)

SUSPENSION BASE

Suspension Base Location

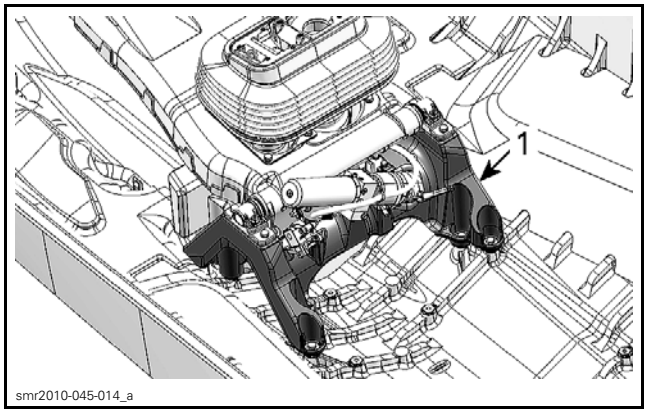

TYPICAL - FIXED DECK REMOVED FOR CLARITY
1. *Suspension base*

Removing the Suspension Base

1. Refer to the appropriate procedures and remove the following parts:
   – Moving deck
   – Engine
   – Shock absorber and spring.
2. Using a marker, **trace the shape of suspension base at the bottom of the hull** to reposition it at the same place.
3. Remove screws securing both shaft supports to suspension base.

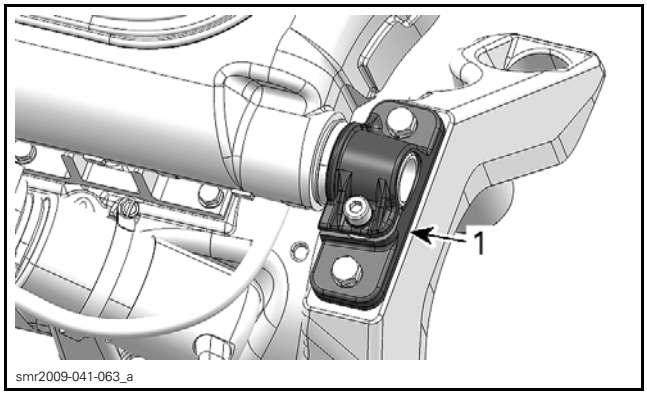

1. *Shaft support (one on each side)*

4. Remove and discard suspension base screws.

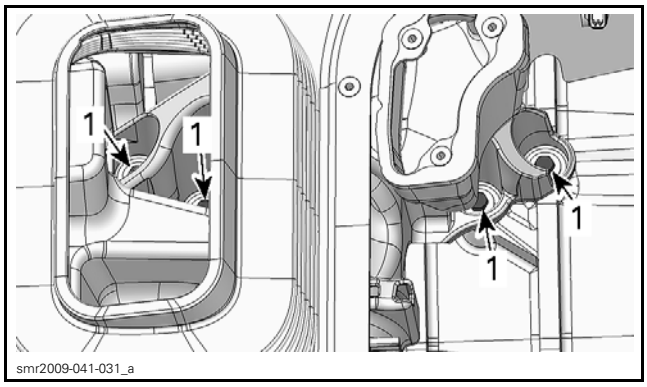

TYPICAL - STARBOARD SIDE
1. Suspension base screws

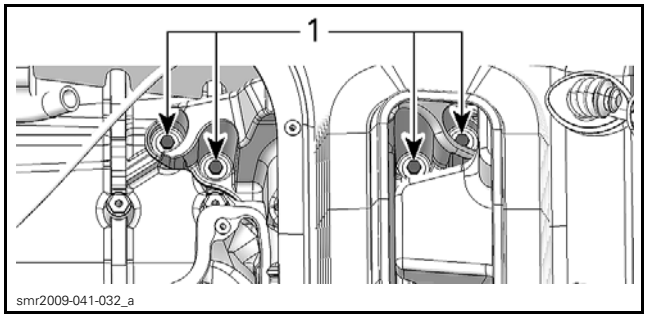

TYPICAL - PORT SIDE
1. Suspension base screws

5. Remove suspension base with the rear vent duct.

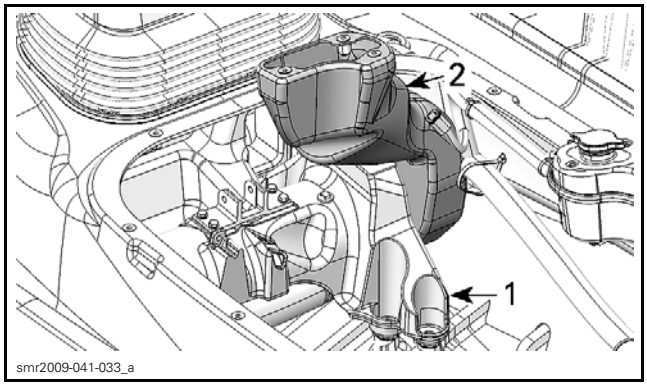

TYPICAL
1. Suspension base
2. Rear vent duct

Installing the Suspension Base

The installation is the reverse of the removal procedure. However, pay attention to the following.

1. Install the suspension base.
   1.1 Position the base in accordance with the reference marks previously drawn at the bottom of the hull.

   NOTE: If no marks are available, see *INSTALLING THE SUSPENSION BASE WITHOUT REFERENCE MARKS*.

   1.2 Install NEW suspension base screws.
   1.3 Tighten suspension base screws to specification as per the following sequence.

TIGHTENING TORQUE	
Suspension base screws	27 N•m (20 lbf•ft)

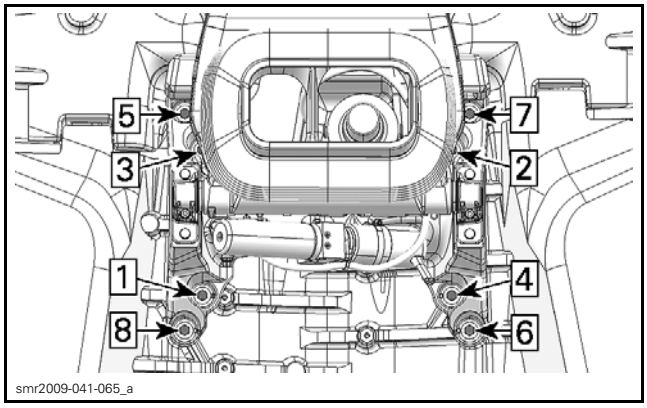

TIGHTENING SEQUENCE

2. Install NEW shaft support screws to secure front suspension arm.
3. Tighten shaft support screws to specification.

TIGHTENING TORQUE	
Shaft support screws	25 N•m (18 lbf•ft)

4. Refer to the appropriate procedures and install all other removed parts.
   – Shock absorber and spring
   – Engine
   – Moving deck.

Installing the Suspension Base without Reference Marks

1. Install the suspension base on watercraft using NEW screws. Do not tighten them yet.
2. Install NEW shaft support screws to secure front suspension arm.
3. Tighten shaft support screws to specification.

TIGHTENING TORQUE	
Shaft support screws	25 N•m (18 lbf•ft)

4. Install lateral supports.
   4.1 Index lateral supports with the front suspension shaft ends. Lateral supports can be inserted in one position only.
   4.2 Tighten lateral support screws to specification.

TIGHTENING TORQUE	
Lateral support screws	48 N•m (35 lbf•ft)

5. Align suspension base on watercraft.
   5.1 On both sides, measure the distance between the end of lateral support and fixed deck.

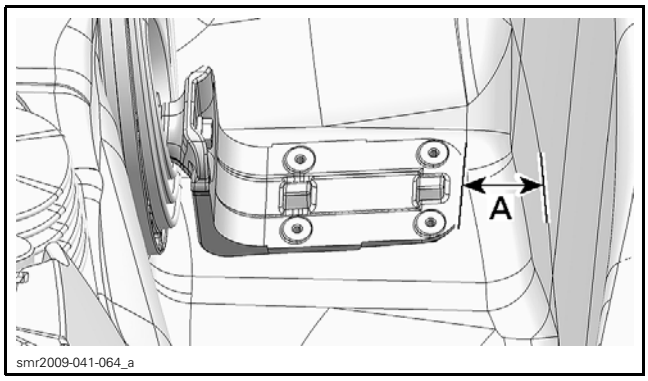

A. Same distance on LH and RH sides

   5.2 If required, move suspension base until both distances are equal.
   5.3 Tighten suspension base screws to specification as per the following sequence.

TIGHTENING TORQUE	
Suspension base screws	27 N•m (20 lbf•ft)

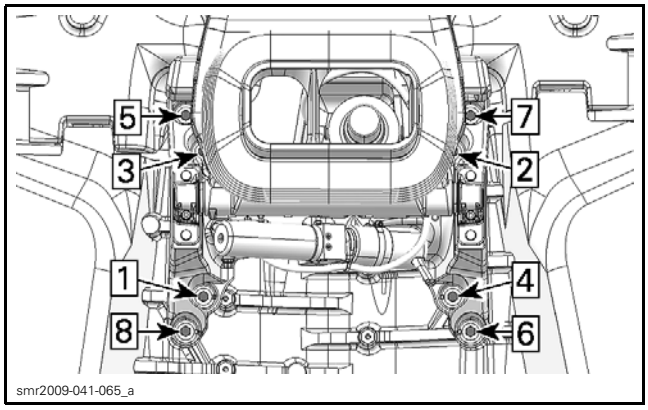

TIGHTENING SEQUENCE

6. Refer to the appropriate procedures and install all other removed parts.
   – Shock absorber and spring
   – Engine
   – Moving deck.

REAR SUSPENSION ARM

Rear Suspension Arm Location

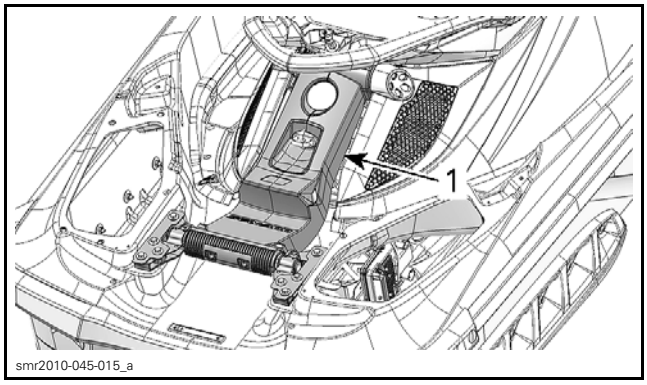

1. Rear suspension arm

Removing the Rear Suspension Arm

1. Open the boarding platform.
2. Remove bolts securing both rear suspension arm covers.

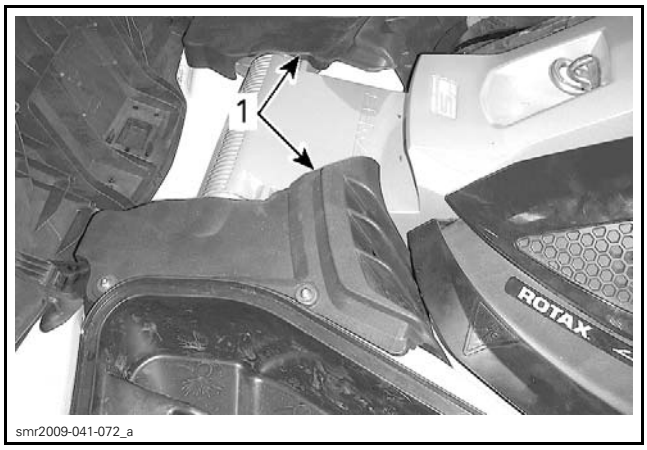

1. Rear suspension arm cover

3. Unclip and remove both lateral rear panels.

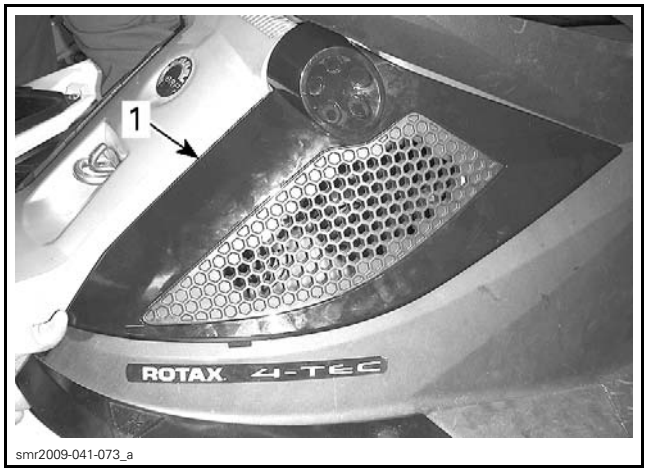

1. RH lateral rear panel

4. Mark position of rear suspension arm brackets for proper reinstallation.
5. Remove and discard screws securing rear suspension arm to fixed deck.

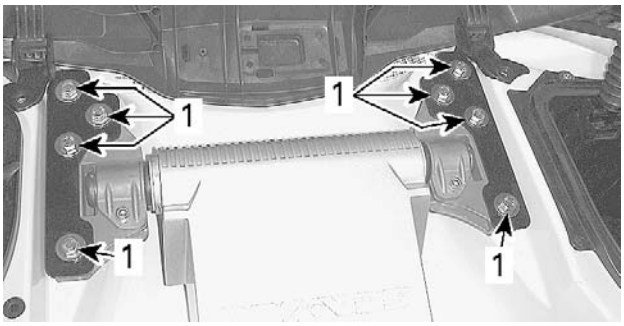

1. Rear suspension arm screws

6. Remove and discard screws securing the top of rear suspension arm.

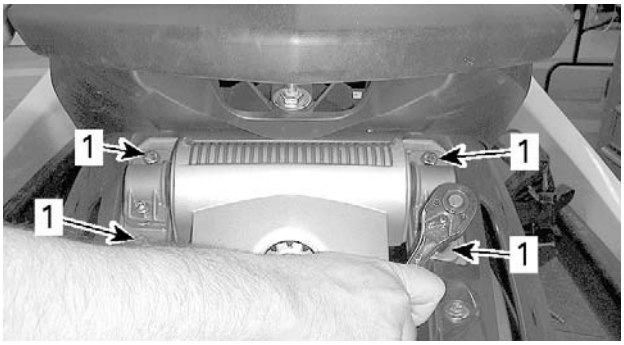

1. Retaining screws

7. Remove the rear suspension arm from watercraft.

Installing the Rear Suspension Arm

1. Using **NEW** screws, install the top of rear suspension arm.

NOTE: If the upper arm shaft or one of its arm shaft support has been removed or loosened, refer to *SUSPENSION ARM SHAFTS* for proper installation procedure.

2. Tighten upper arm support screws to specification.

TIGHTENING TORQUE	
Upper arm support screws	25 N•m (18 lbf•ft)

3. Carefully lower and secure the rear suspension arm to the fixed deck.
   3.1 Position the rear suspension arm brackets in accordance with the reference marks previously draw on fixed deck.

   NOTICE **If no mark was traced, refer to *INSTALLING THE REAR SUSPENSION ARM WITHOUT REFERENCE MARKS* for proper procedure to install and align the rear suspension arm.**

   3.2 Install **NEW** screws to secure rear suspension arm brackets.
   3.3 Tighten rear suspension arm screws to specification.

TIGHTENING TORQUE	
Rear suspension arm screws	25 N•m (18 lbf•ft)

Installing the Rear Suspension Arm Without Reference Marks

1. Lower the rear suspension arm on fixed deck.
2. Position the square openings of rear suspension arm brackets so that the threaded inserts in fixed deck are centered.

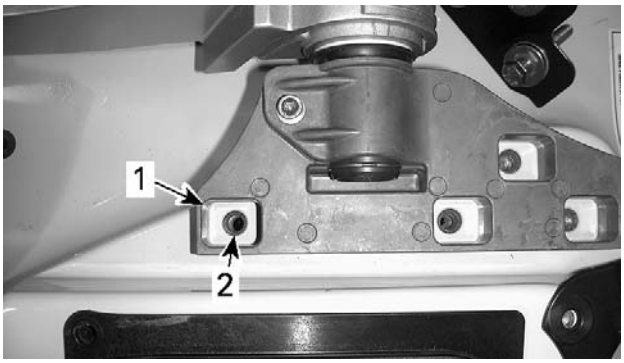

1. Square opening
2. Threaded insert

3. On each bracket, install the retaining plate and one screw.
4. Install a weight of 90 kg (200 lb) on vehicle to lower the moving deck.
5. Check moving deck position in comparison to fixed deck.
   5.1 Check the gap between moving deck wipers and fixed deck. It should be the same on both sides.
   5.2 Check front and rear gaps. Moving deck should be able to move without having contact with the fixed deck.

5.3 Reposition rear suspension arm brackets on fixed deck until positioning of moving deck is satisfactory.

6. Secure the rear suspension arm to the fixed deck.
   6.1 Install **NEW** screws to secure rear suspension arm brackets.
   6.2 Remove and replace screws installed during alignment.
   6.3 Tighten rear suspension arm screws to specification.

TIGHTENING TORQUE	
Rear suspension arm screws	25 N•m (18 lbf•ft)

SUSPENSION ARM SHAFTS

Removing the Front Suspension Arm Shaft

1. Remove the *FRONT SUSPENSION ARM*, see procedure in this subsection.
2. Remove and discard socket screws securing supports to shaft.
3. Separate arm shaft supports from arm shaft.

Installing the Front Suspension Arm Shaft

1. Insert shaft in the suspension arm.
2. Install a support on each end of shaft.
3. Secure the LH arm shaft support to suspension base using **NEW** support screws.

NOTE: Make sure to insert the support pin into suspension base hole.

4. Tighten the LH support screws to specification.

TIGHTENING TORQUE	
Shaft support screws	25 N•m (18 lbf•ft)

5. Apply a force on the RH support to move it on the left side.

NOTICE **Make sure arm shaft is fully inserted, it must lean against the arm shaft support.**

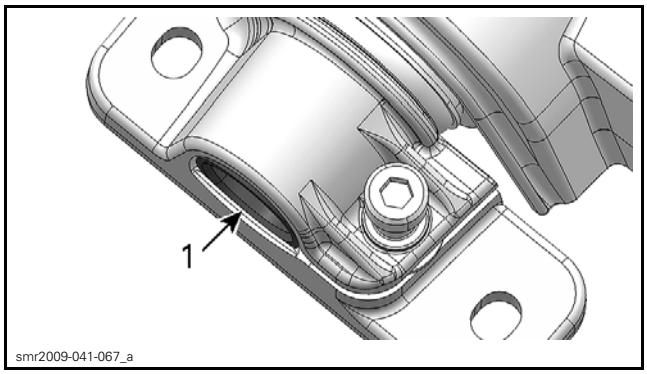

1. Arm shaft against its support

6. Install **NEW** support screws and tighten them to specification.

TIGHTENING TORQUE	
Shaft support screws	25 N•m (18 lbf•ft)

7. Secure both supports to shaft using **NEW** socket screws.
8. Tighten shaft screws to specification.

TIGHTENING TORQUE	
Shaft screws	12 N•m (106 lbf•**in**)

Removing the Rear Suspension Arm Upper Shaft

1. Unclip and remove both lateral rear panels.

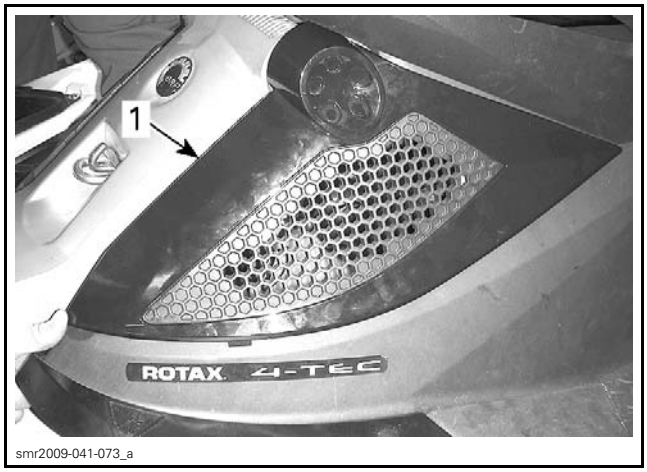

1. RH lateral rear panel

2. Remove arm shaft support screws.

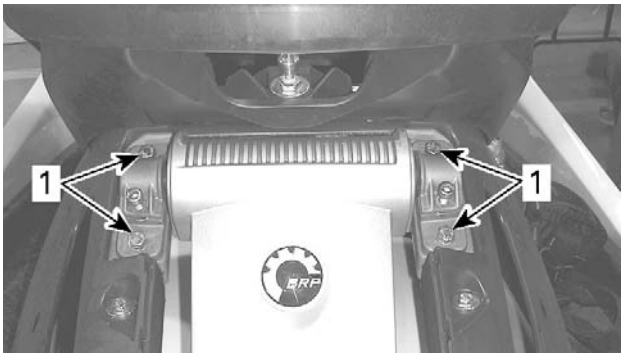

smr2009-041-077_a

1. *Arm shaft support screws*

3. Remove and discard socket screws securing supports to arm shaft.
4. Separate arm shaft support from arm shaft.

Installing the Rear Suspension Arm Upper Shaft

1. Insert shaft in the rear arm.
2. Install a support on each end of shaft.
3. Secure the LH support to rear arm holder using NEW support screws.

NOTE: Make sure to insert the support pin into holder hole.

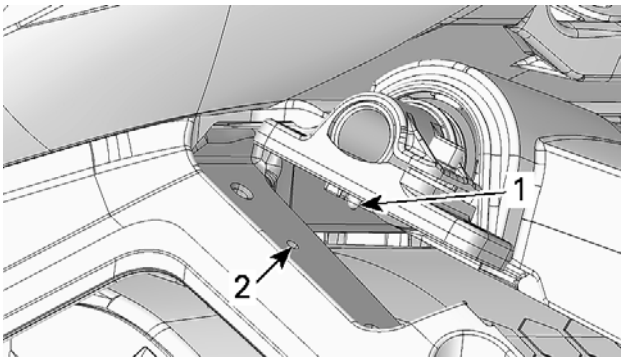

smr2009-041-078_a

1. *Support pin*
2. *Holder hole*

4. Tighten the LH support screws to specification.

TIGHTENING TORQUE	
Upper arm support screws	25 N•m (18 lbf•ft)

5. Apply a force on the RH support to move it to the left side.

NOTE: A bar clamp can be used to compress both supports together.

NOTICE **Make sure arm shaft is fully inserted, it must lay flush against the arm shaft support.**

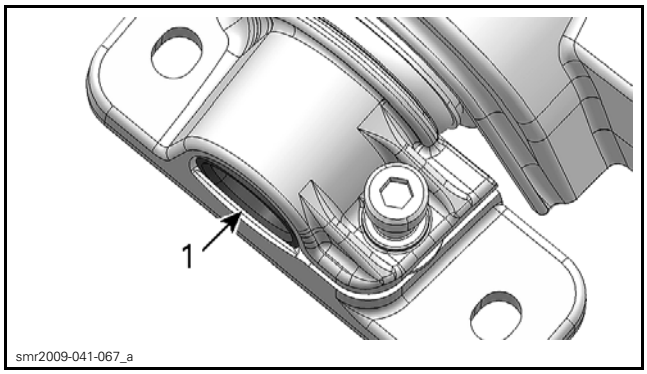

smr2009-041-067_a

1. *Arm shaft against its support*

6. Install NEW support screws and tighten them to specification.

TIGHTENING TORQUE	
Upper arm support screws	25 N•m (18 lbf•ft)

7. Secure both supports to shaft using NEW socket screws.
8. Tighten upper shaft screws to specification.

TIGHTENING TORQUE	
Upper shaft screws	12 N•m (106 lbf•**in**)

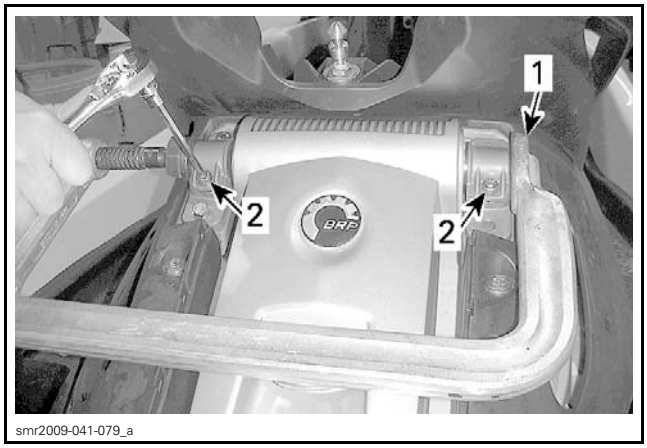

smr2009-041-079_a

1. *Bar clamp*
2. *New socket screws*

Removing the Rear Suspension Arm Lower Shaft

1. Open the boarding platform.
2. Remove bolts securing both rear suspension arm covers.

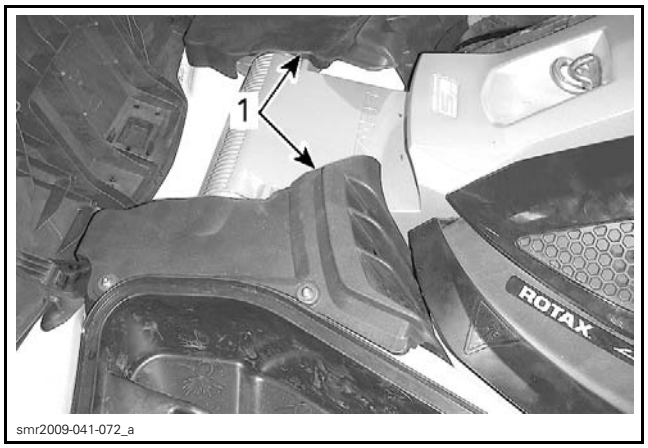

1. Rear suspension arm cover

3. **Mark position of rear suspension arm brackets for proper reinstallation**.
4. Remove and discard screws securing rear suspension arm to fixed deck.

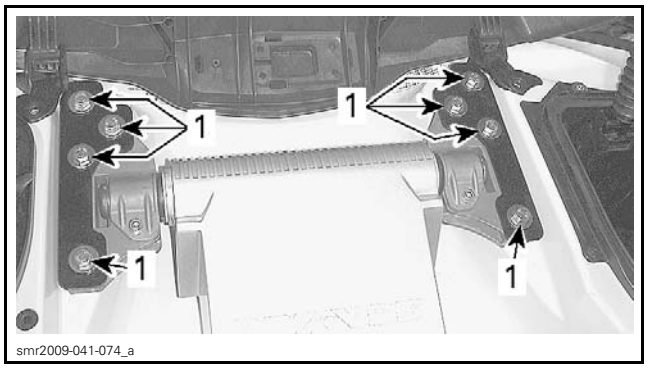

1. Rear suspension arm screws

5. Remove and discard socket screws securing rear brackets to arm shaft ends.

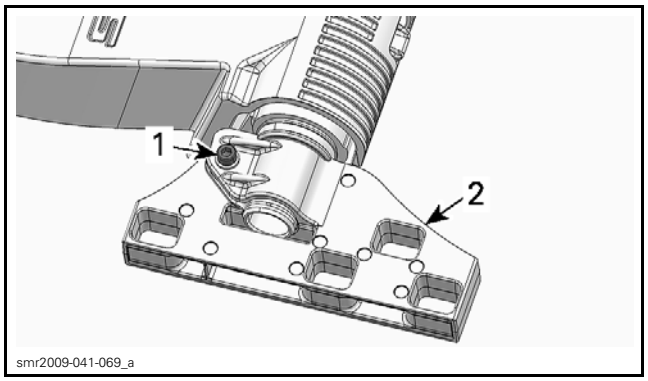

1. Socket screw
2. LH rear bracket

6. Press one rear bracket against the suspension arm bushing and remove the circlip. Repeat for the other side.

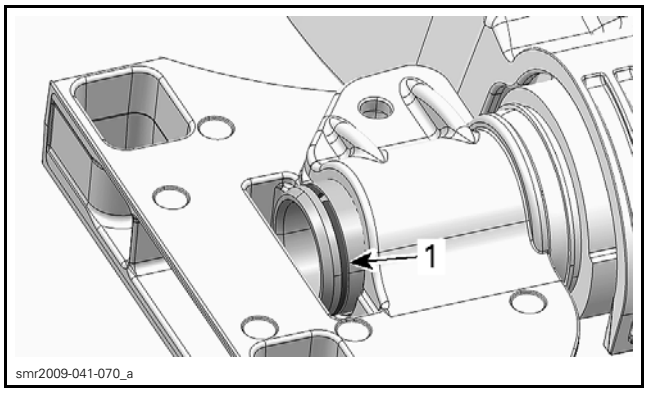

1. Circlip

Installing the Rear Suspension Arm Lower Shaft

1. When reassembly the rear bracket on shaft end, press bracket on bushing to install the circlip.
2. When both brackets are installed on shaft, pull brackets outside to position circlips against brackets.

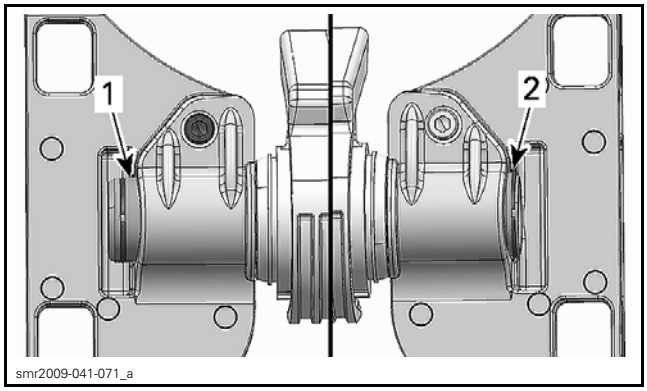

1. Incorrect installation
2. Proper installation

3. Lower the rear suspension arm on fixed deck.
4. Tighten **NEW** socket screws to specification.

TIGHTENING TORQUE	
Lower shaft screws	10 N•m (89 lbf•**in**)

5. Refer to *REAR ARM* for reinstallation.

INTELLIGENT SUSPENSION (iS)

SERVICE TOOLS

Description	Part Number	Page
FLUKE 115 MULTIMETER	529 035 868	15–18
MAGNETO HARNESS 6 PINS	295 000 136	15
SUPERTANIUM DRILL BIT 3/16"	529 031 800	26

SERVICE PRODUCTS

Description	Part Number	Page
DIELECTRIC GREASE	293 550 004	9
LOCTITE 243 (BLUE)	293 800 060	23, 25

FRONT SUSPENSION ARM AND HYDRAULIC PUMP

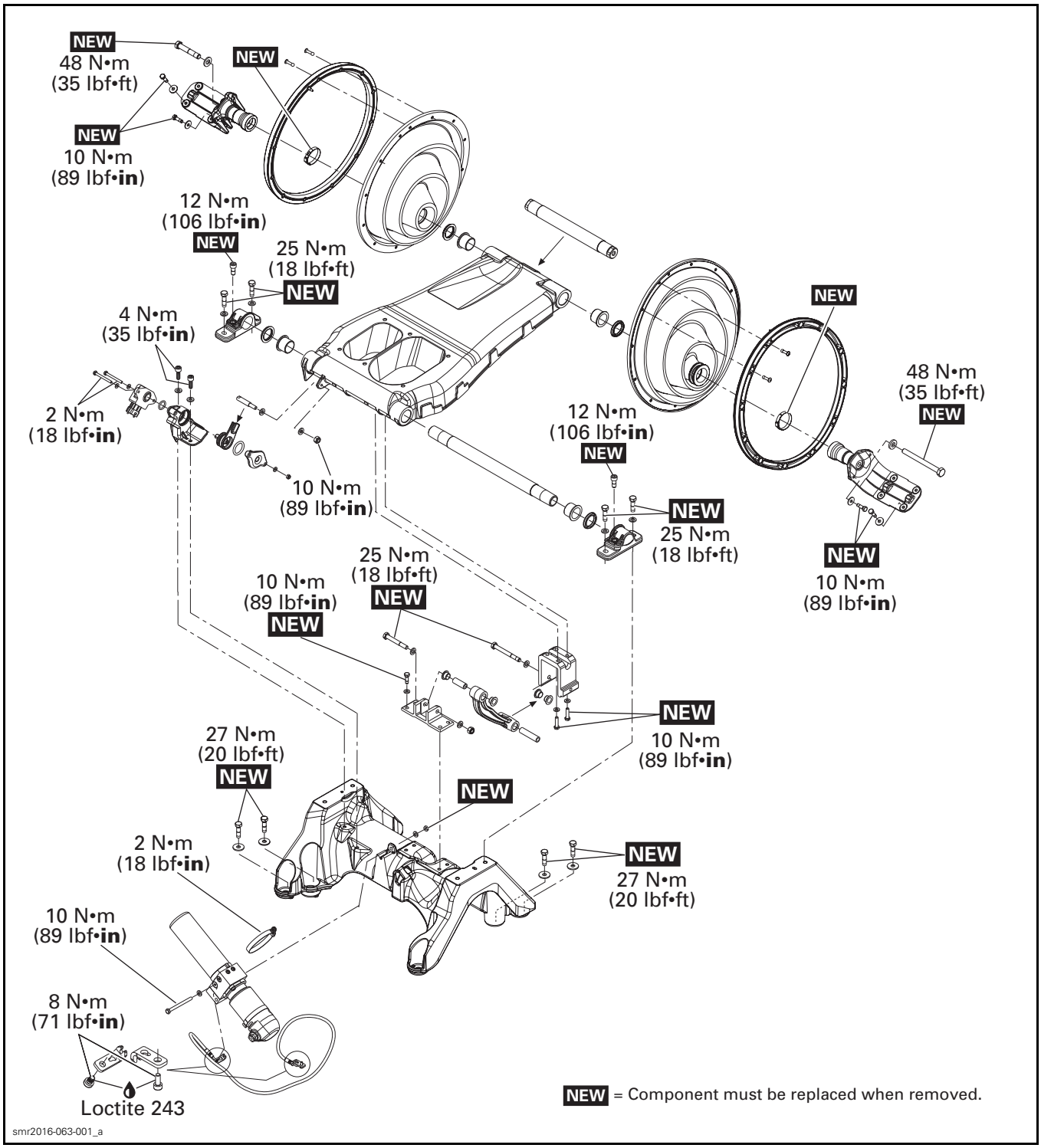

ACTUATOR AND SHOCK ABSORBER

If you bought this manual from any other seller please leave them NEGATIVE feedback and notify me at bestshopmanuals@gmail.com

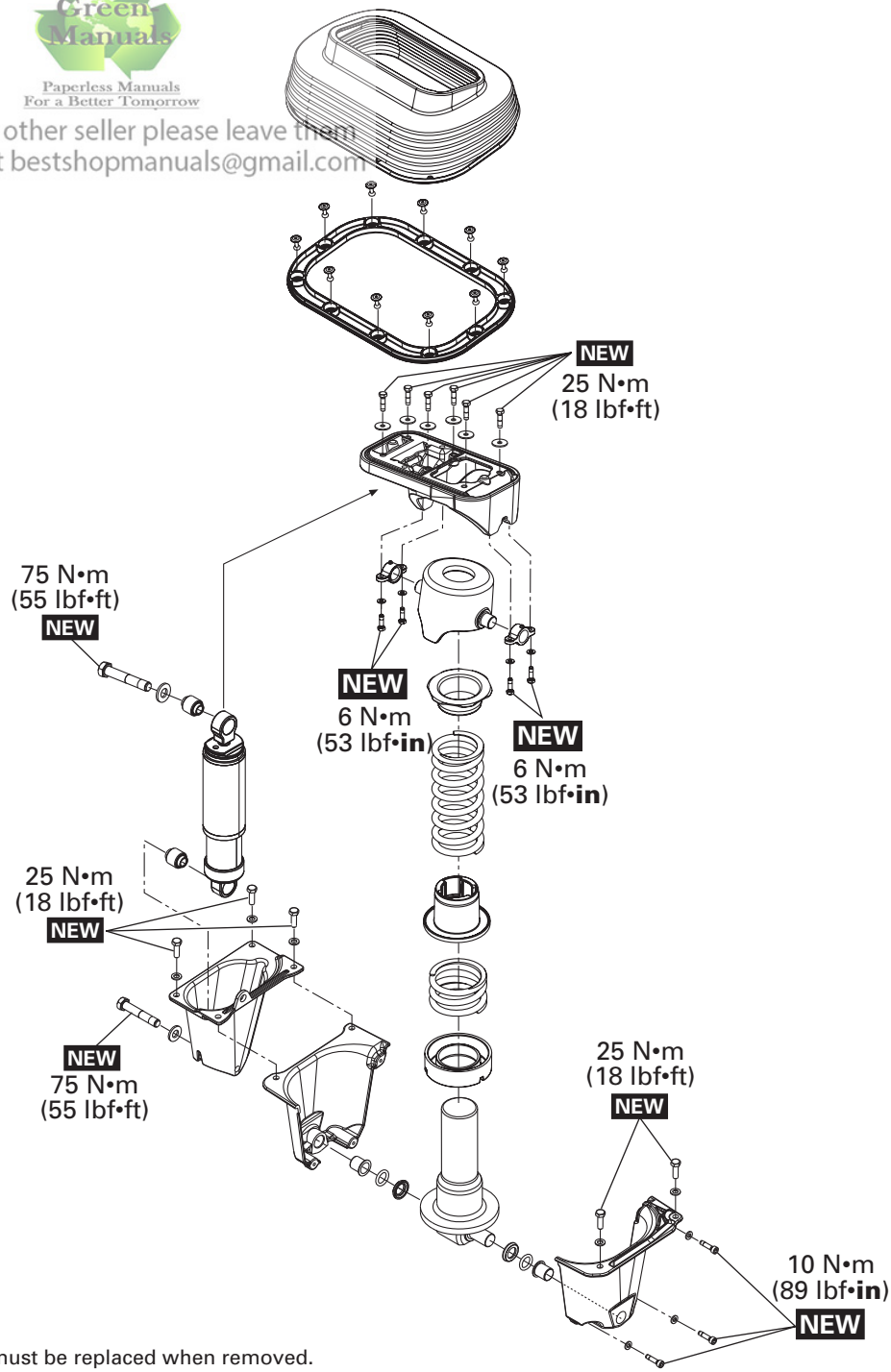

NEW = Component must be replaced when removed.

smr2016-063-002_a

REAR SUSPENSION ARM

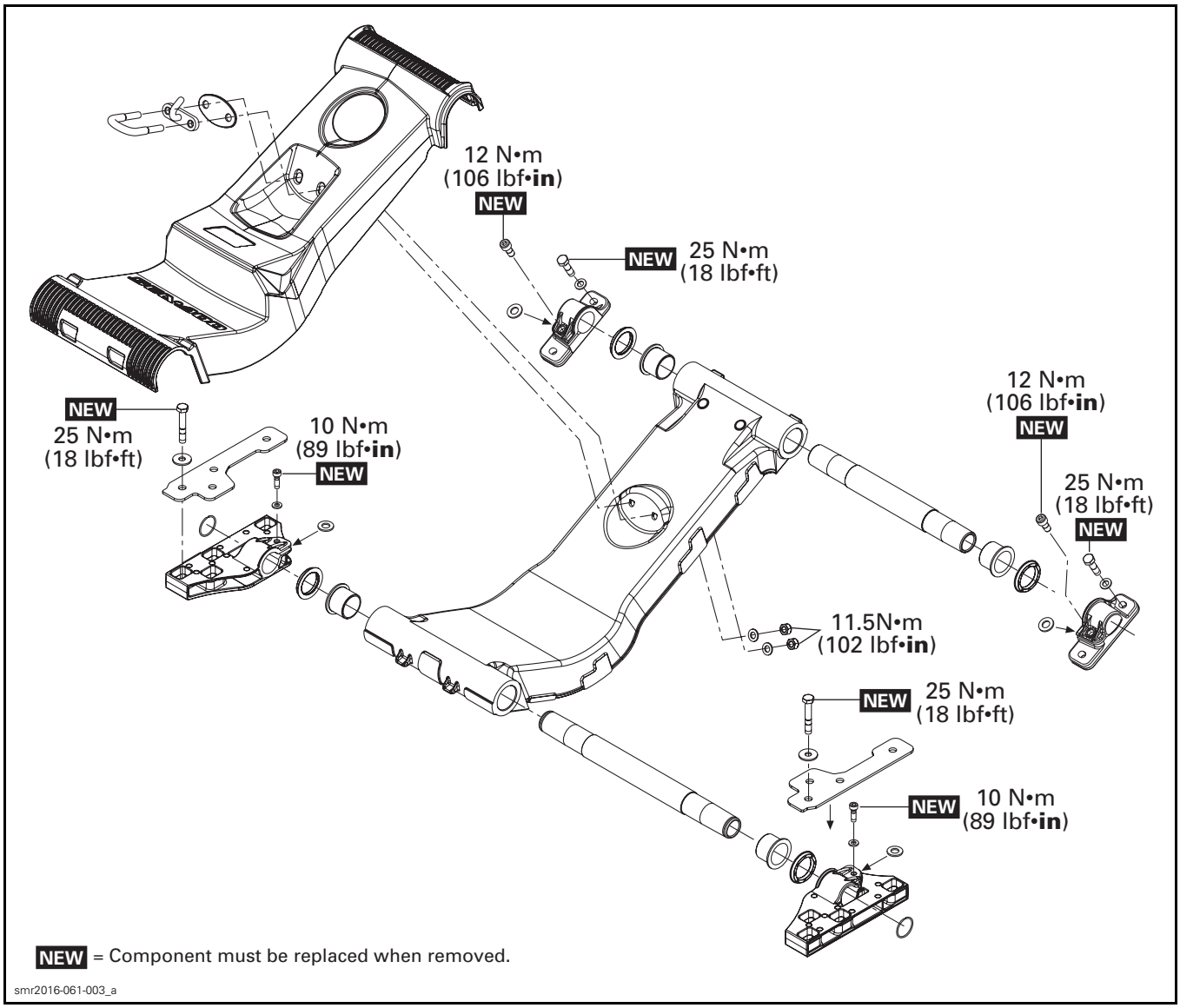

GENERAL

NOTE: For a complete overview of the electrical system, refer to *POWER DISTRIBUTION AND GROUNDS* subsection.

It is highly recommended to disconnect the battery when replacing any electric or electronic component.

⚠ WARNING

Always disconnect battery exactly in the specified order, BLACK (-) cable first, RED (+) cable last. Always reconnect BLACK (-) cable last. Do not place tools on battery.

SYSTEM DESCRIPTION (COMPONENTS)

The intelligent suspension is a mechanical system composed of two springs and one shock absorber installed in the fixed deck which connects to the moving deck to isolate the riders from the rough water.

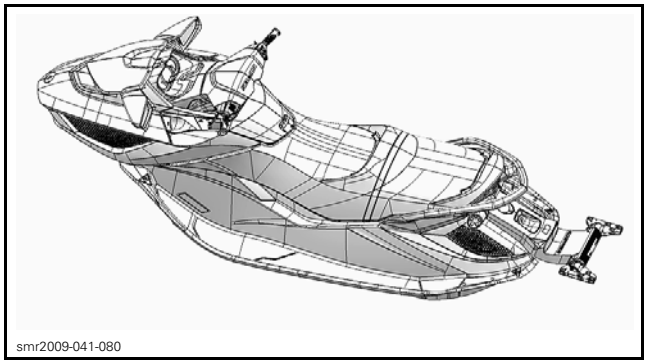

MOVING DECK

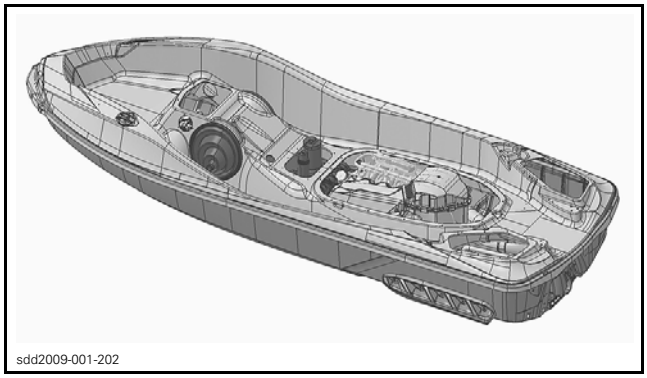

FIXED DECK

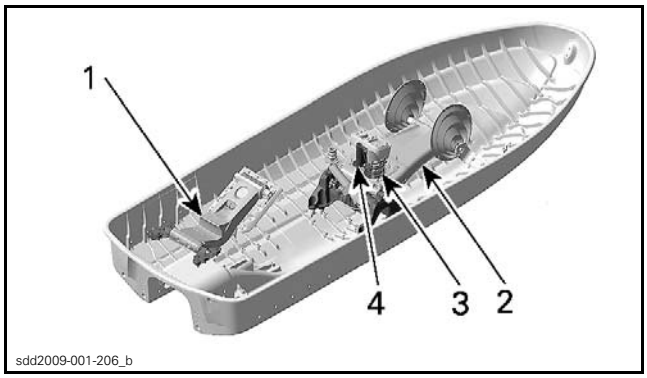

1. *Rear suspension arm*
2. *Front suspension arm*
3. *Springs*
4. *Shock absorber*

An actuator is mounted underneath the springs to control the spring preload and therefore the suspension height.

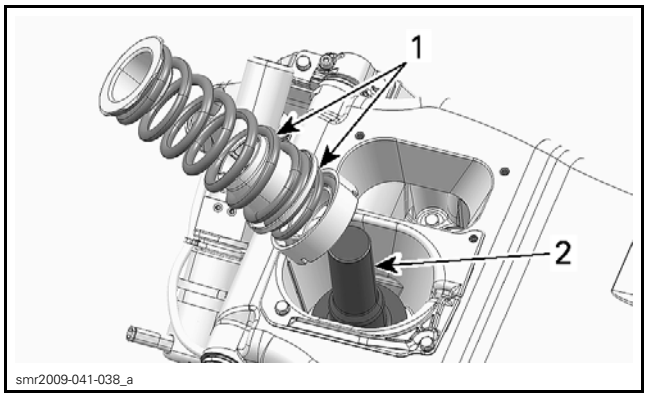

1. *Springs*
2. *Actuator*

The iS module controls the electric motor of the hydraulic pump to adjust the actuator height. It also sets the suspension height according to the active mode of operation and input signals.

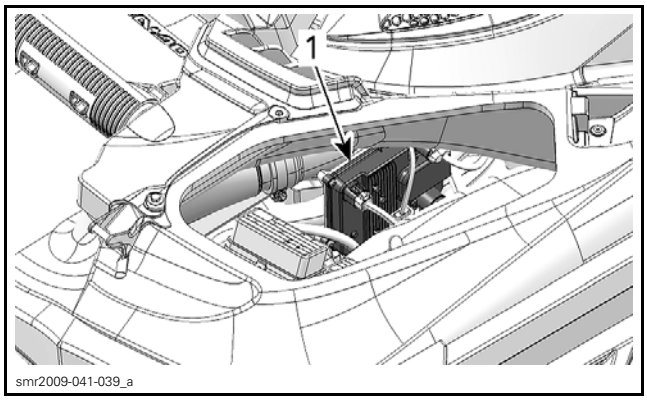

REAR STARBOARD SIDE
1. *iS module*

iS Module

The iS module communicates via CAN protocol with the multifunction gauge.

The iS module receives information from the multifunction gauge and a comparison is made with the input from the suspension position sensor. If the suspension is not in the proper position, the iS module will send an output signal to the hydraulic pump to either raise or lower the suspension to pre-programmed positions.

Suspension Position Sensor

The suspension position sensor is a potentiometer that sends a signal to the iS module which is proportional to the front suspension arm angle.

SYSTEM OPERATION

The intelligent suspension system (iS), allows the moving deck to move independently of the fixed deck, isolating rider and passenger(s) from the impact of rough water.

⚠ WARNING

Although the suspension system absorbs part of the vertical forces and therefore reduces the impact force to the body, it cannot eliminate it completely. To prevent you and your passenger from being bounced and eventually ejected from the watercraft, reduce your speed.

⚠ WARNING

Avoid riding in very rough waters or practicing extreme maneuvers like jumping wakes or waves.

The iS system provides multiple modes of operation.

Automatic Suspension Mode

The system always starts up in AUTOMATIC SUSPENSION mode and shuts down in DOCK mode.

The suspension will automatically move up to a factory preset height. This height is ideal for most riding conditions at cruising speeds.

The iS system constantly monitors the stroke of the suspension and automatically compensates for changing water conditions and passenger load.

The moving deck height proportionally elevates the center of gravity of the watercraft.

NOTE: When performing certain maneuvers at low speed the watercraft's propensity to overturn can increase.

Manual Suspension Mode

MANUAL SUSPENSION mode allows fine-tuning the suspension calibration to the operator's preference. The SUSPENSION HEIGHT can be adjusted using the UP or DOWN button while in IS MODE.

SUSPENSION HEIGHT can be adjusted a total of nine increments.

NOTE: Changing the suspension height using the UP/DOWN buttons puts the iS system in MANUAL SUSPENSION mode. The AUTO mode is deactivated.

Manually Adjusting Ride Height

While in IS MODE, press the UP or DOWN button once to move the suspension to the next height increment, or press and hold the button until the desired ride height is obtained.

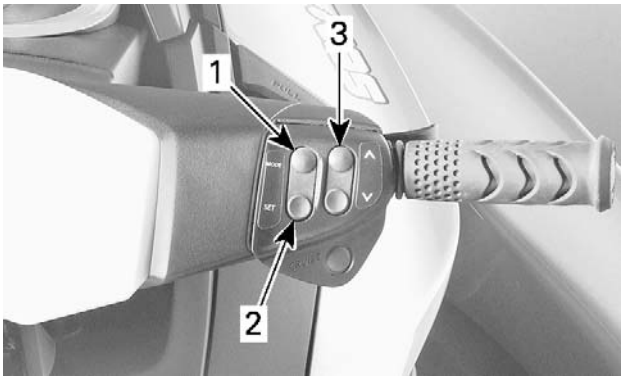

sdd2009-001-024_b

TYPICAL
1. *MODE*
2. *SET*
3. *UP and DOWN button*

The following indications of manual suspension mode can be observed in the digital screen of the information center:

– A scrolling message in the digital screen that states MANUAL SUSPENSION.
– The AUTO indication in the iS display will disappear.
– The suspension position indicator will indicate the relative SUSPENSION HEIGHT (only one segment of the indicator will be on).

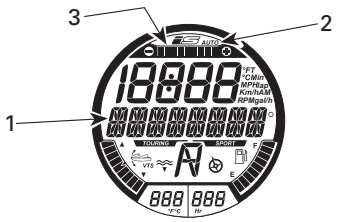

AUTOMATIC SUSPENSION MODE

1. MANUAL SUSPENSION message is displayed here
2. AUTO mode indicator OFF
3. Relative suspension position indication

Reverting Back to AUTO MODE

To revert back to AUTO selection mode without stopping the engine, proceed as follows:

– Press the MODE button repeatedly until the IS MODE message appears in the multifunction display.
– Press the SET button.
– A scrolling message in the multifunction display stating DOUBLE_CLICK_UP_FOR_AUTO_MODE appears.
– Double click on UP button.

The AUTO mode is confirmed by:

– A scrolling message in the digital screen stating AUTOMATIC SUSPENSION.
– The AUTO indication in the iS display will appear.
– All segments of the suspension position indicator will be on.

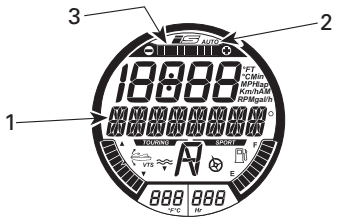

AUTOMATIC SUSPENSION MODE

1. AUTOMATIC SUSPENSION message is displayed here
2. AUTO mode indicator ON
3. All segments of suspension position indicator ON

Dock Modes

The iS system can be set to DOCK MODE AUTO or DOCK MODE OFF.

Dock Mode AUTO

In DOCK MODE AUTO, the suspension lowers to DOCK mode height to lower the center of gravity when certain conditions are met.

– When the engine is shut down after normal operation of the watercraft.
– If O.T.A.S. is activated *SEE ACTIVE TECHNOLOGIES (iCONTROL)*.
– If the operator releases the throttle to idle RPM for approximately 10 seconds.

NOTE: When the suspension moves down to dock mode height, a DOCK MODE ON message will scroll across in the multifunction display.

Dock Mode OFF

If the suspension is set to DOCK MODE OFF, the suspension will not lower itself to DOCK mode height when the throttle is released to idle for more than ten seconds. However, it will lower itself automatically when:

– The engine is shut off
– When O.T.A.S. is activated.

If the suspension is in the up position with the watercraft powered up and the DOWN button is double clicked while in the IS MODE, the suspension will lower itself to DOCK mode height even if the suspension is set to DOCK MODE OFF.

If the suspension is in the down position (dock mode height) with the watercraft powered up and the UP button is double clicked while in the IS MODE, the suspension will move up to the factory preset height.

⚠ WARNING

When performing certain maneuvers at low speed or when docking, the watercraft's propensity to overturn can increase. The more riders (or weight) on the moving deck, the more unstable the watercraft may become.

NOTE: DOCK MODE AUTO is always active when using a learning key.

Selecting DOCK MODE AUTO or DOCK MODE OFF

Selecting DOCK MODE AUTO or DOCK MODE OFF is only available when the engine is not running and when using a normal key.

To change the DOCK mode of operation, carry out the following steps.

1. Press the START/STOP button to power up the information center.

2. Install the tether cord on the engine cut-off switch.
3. Press the MODE button repeatedly until SETTINGS is displayed in the Information Center.

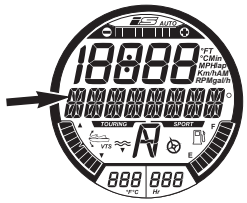

MESSAGE DISPLAYED
SETTINGS

4. Press the SET button to display DOCK MODE.

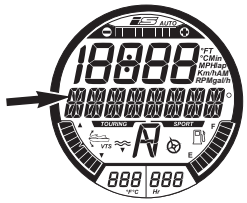

FIRST AVAILABLE MODE OPTION
DOCK MODE message is displayed here

5. Press the SET button to display DOCK MODE AUTO.

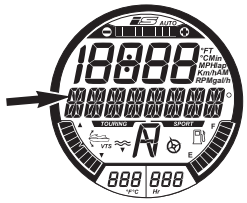

MODE ACTIVATED
DOCK MODE AUTO message is displayed here

6. Press the UP or DOWN button to toggle the display to DOCK MODE OFF.

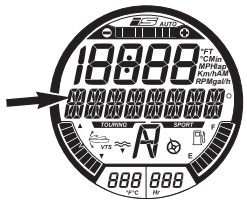

MODE DEACTIVATED
DOCK MODE OFF message is displayed here

7. Press the SET button, or wait for the function to time out to save the setting and return to main display.

You may now start the engine and drive away using the selected DOCK MODE.

⚠ CAUTION **Operating the watercraft in DOCK MODE OFF prevents the suspension from automatically moving to the "down" position when operating the watercraft at slow speed or when stopping. This maintains a higher center of gravity, reduces stability, and makes the watercraft more prone to overturning.**

TROUBLESHOOTING

DIAGNOSTIC TIPS

It is important to determine first if the problem is electrical or mechanical related. If you hear the hydraulic motor running when pressing the UP or DOWN button, check for related mechanical problem.

NOTE: It is a good practice to check for fault codes using B.U.D.S. software as a first troubleshooting step. If a problem occurs with the suspension, several fault codes pertaining to the suspension position sensor may be generated.

IMPORTANT: When troubleshooting an electrical system fault, check battery condition, cables and connections first.

Activating the Electrical System

1. Press the START/STOP button.

NOTE: Pressing the START/STOP button without the D.E.S.S. key installed on its post will turn on electrical power without starting the engine; the information center will cycle through a self-test function and shut off its display after a few seconds. However, the electrical system will stay powered up for approximately three minutes after the START/STOP button was depressed.

2. Install D.E.S.S. key to activate ECM and the information center when testing procedures require the device or system to be supplied with electrical power.

NOTE: When using B.U.D.S.,**briefly** press the START/STOP button to initiate back the communication after the electrical system has shut off.

Testing the Circuit

Check the related-circuit fuse condition with a fuse tester or test light (relying solely on a visual inspection could lead to an incorrect conclusion).

Inspecting the Electrical Connection

When replacing an electric or electronic component, always check electrical connections. Make sure they are tight, make good contact, and are corrosion-free. Dirty, loose or corroded contacts are poor conductors and are often the source of a system or component malfunction.

Pay particular attention to ensure that pins are not bent or pushed out of their connectors.

Ensure all wire terminals are properly crimped on wires, and connector housings are properly fastened.

Check for signs of moisture, corrosion or dullness. Clean pins properly and coat them with DIELECTRIC GREASE (P/N 293 550 004) or other appropriate lubricant (except if otherwise specified) when reassembling them.

Pay attention to the ground wire connections. Make sure they are clean, tight and free of corrosion.

DIAGNOSTIC GUIDELINES

The following is provided to help in diagnosing the probable source of troubles. It is a guideline and it should not be assumed to list all possible problems.

SUSPENSION DOES NOT MOVE

1. Check gauge display for iS informations.
   - *No information, refer to the diagnostic flow chart (electrical) in this subsection.*
   - *iS information appears, refer to the diagnostic flow chart (hydraulic/mechanical) in this subsection.*

SUSPENSION DOES NOT LOWER IN DOCK MODE POSITION

1. Something stuck under moving deck.
   - *Remove object(s) between moving deck and fixed deck.*
2. Watercraft is not level.
   - *Place watercraft level*
3. Hydraulic fluid level too low.
   - *Refill hydraulic pump reservoir and check for leaks.*
4. Shock absorber is damaged.
   - *Replace shock absorber.*
5. Leak in hydraulic circuit.
   - *Repair or replace defective part(s).*
6. Faulty suspension position sensor.
   - *Test sensor and replace as required.*
7. Actuator is damaged.
   - *Replace the actuator.*
8. Hydraulic pump cannot build enough pressure.
   - *Replace hydraulic pump.*

SUSPENSION MOVES ERRATICALLY

1. Defective shock absorber.
   - *Replace the shock absorber.*
2. Broken spring(s).
   - *Replace spring(s).*

SUSPENSION NOISE (DURING A TURN)

1. Front or rear suspension arm shaft supports position.
   - *Supports must be flush against both ends of shaft. Reposition shaft in its supports.*
2. Worn arm shaft bushings.
   - *Check front and rear arm shaft bushings condition and replace as required.*
3. Snap rings on both sides of the rear lower arm shaft are not properly positioned.
   - *Reposition shaft in its supports.*

SUSPENSION NOISE (FRONT OF SEAT)

1. Holder retaining screws are loose.
   - *Tighten shock absorber and actuator holder screws to recommended torque.*
2. Shock absorber screws are loose.
   - *Tighten shock absorber screws to recommended torque.*
3. Link under actuator holder loosened or not installed.
   - *Install link properly.*
   - *Tighten bolts to recommended torque.*

SUSPENSION IS LOWER THAN THE DOCK MODE POSITION

1. Spring (s) out of specification or broken.
   - *Replace the defective spring(s).*
2. Bump stops damaged or worn.
   - *Replace both bump stops.*

SUSPENSION BOTTOMS HARD

1. Spring(s) out of specification or broken.
   - *Replace the defective spring(s).*
2. Shock absorber is damaged.
   - *Check shock absorber resistance. Replace shock absorber.*
3. Bump stops damaged or worn.
   - *Replace both bump stops.*

SUSPENSION QUIT WORKING BUT MAY OPERATE MOMENTARILY AFTER RESTARTING THE ENGINE

1. Hydraulic pump current draw is too high.
   - *Check hydraulic pump.*
2. Internal problem within iS module.
   - *Replace iS module.*

DIAGNOSTIC FLOW CHARTS

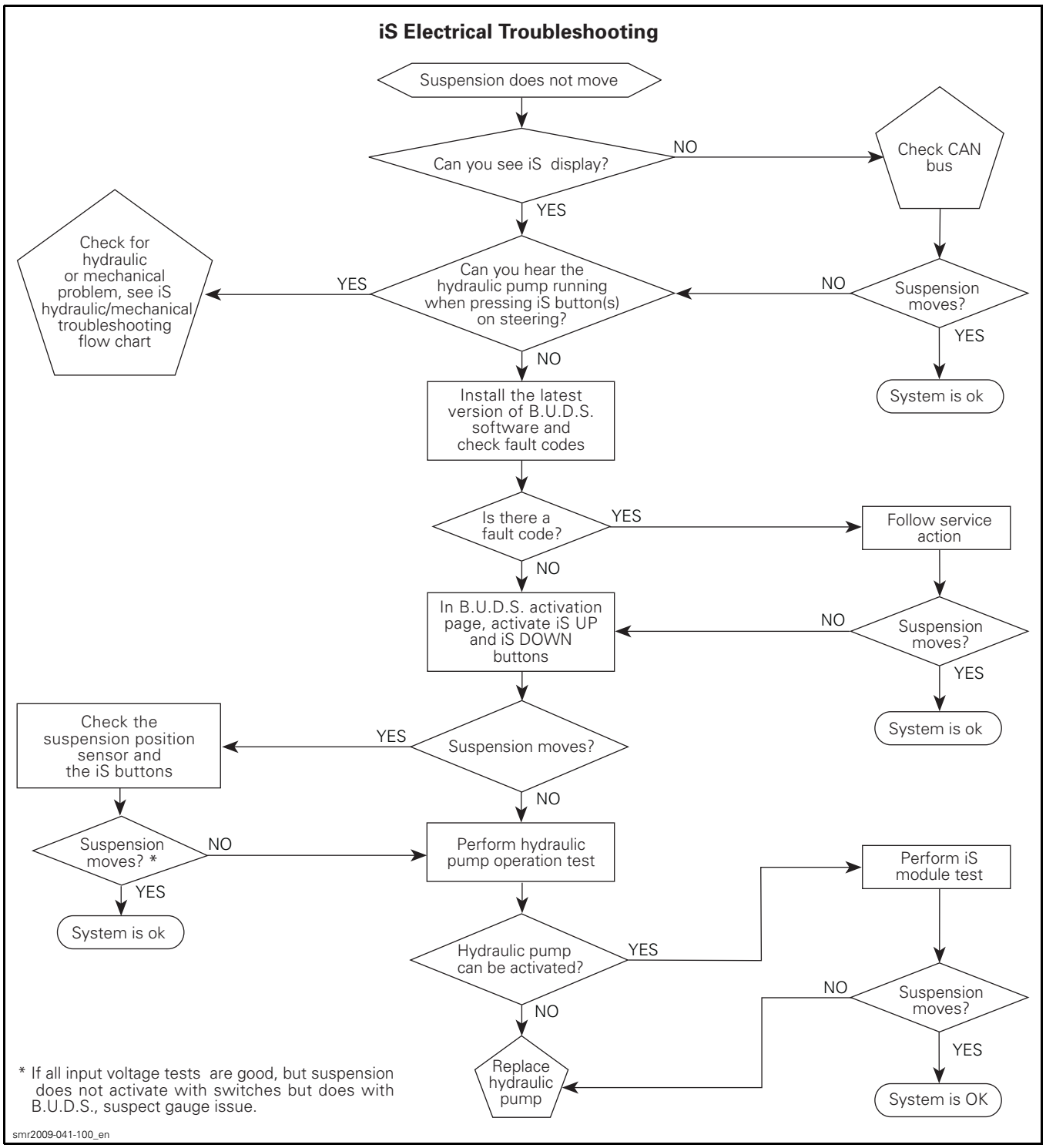

iS Hydraulic/Mechanical Troubleshooting

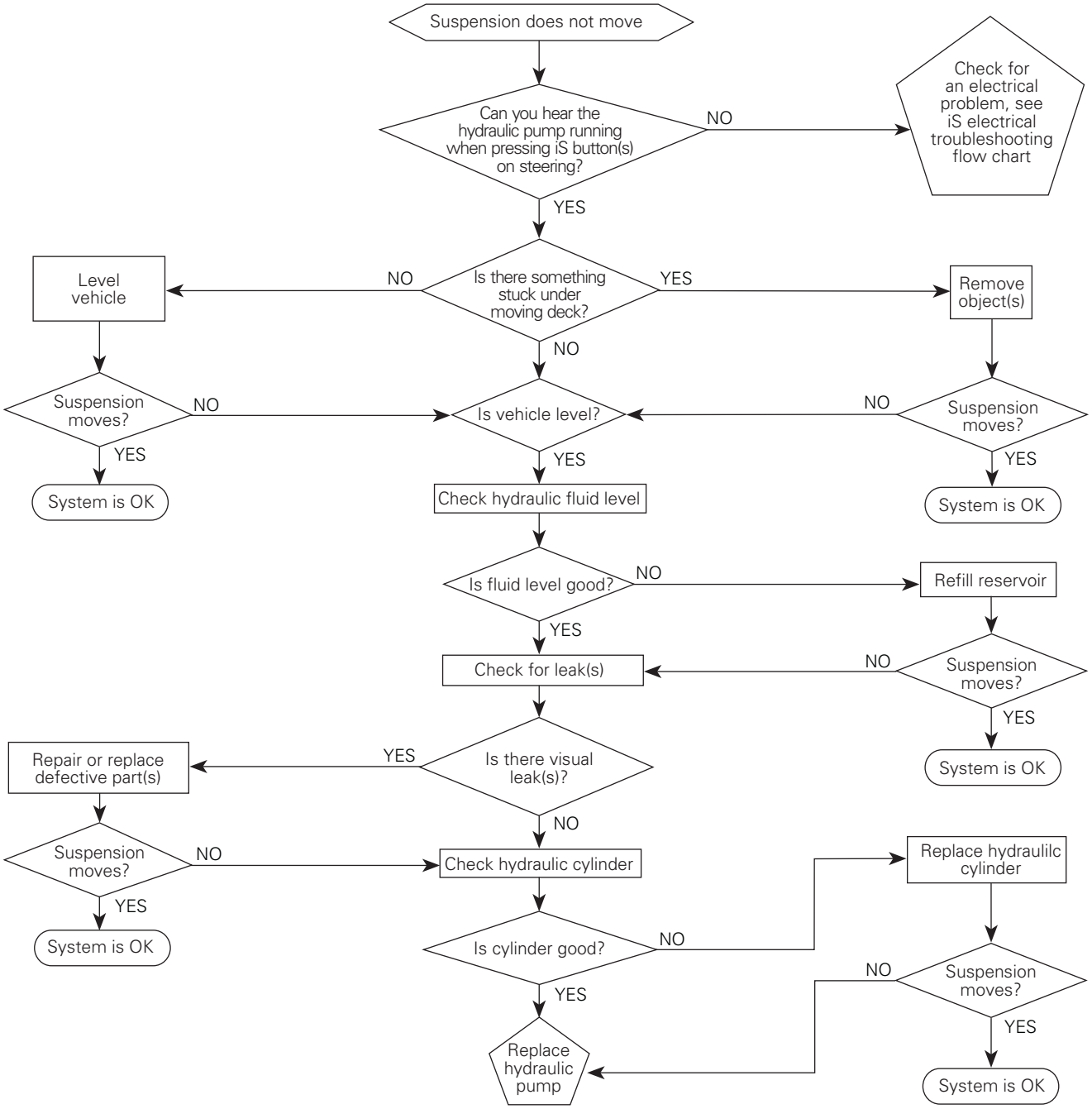

smr2009-041-101_en

PROCEDURES

SHOCK ABSORBER

Shock Absorber Location

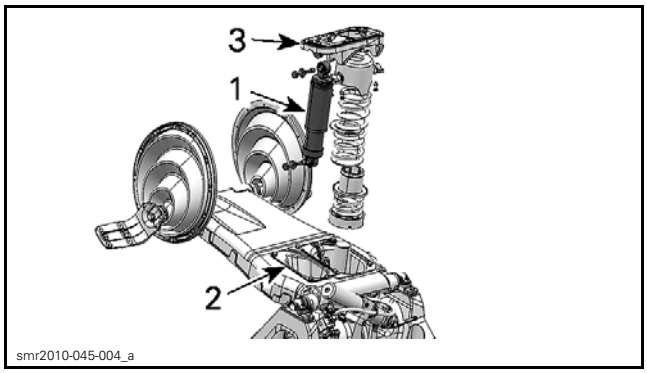

1. *Shock absorber*
2. *Shock holder*
3. *Mounting plate*

Removing the Shock Absorber

1. Remove the moving deck. Refer to *BODY (GTX, RXT AND WAKE PRO SERIES)* subsection.
2. Remove tapes securing central bellows to mounting plate.
3. Move down central bellows to reach shock holder screws.
4. Remove and discard the four screws securing the shock holder.

NOTE: Using lateral supports, raise front arm to reach front screws.

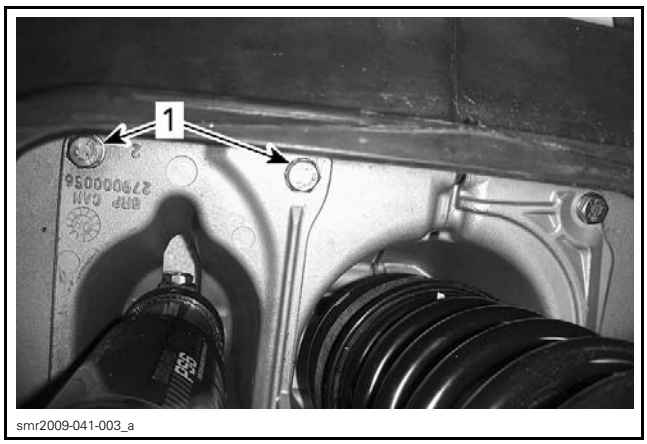

1. *Front retaining screws*

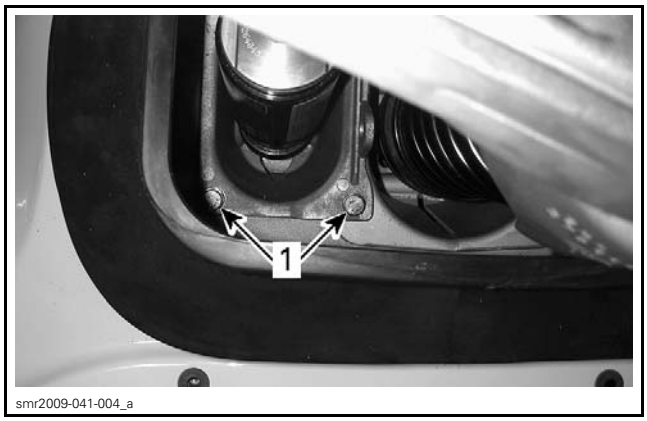

1. *Rear retaining screws*

5. Remove shock absorber with mounting plate and shock holder.

NOTE: Take care not to let the spring protector fall into the hull.

6. Remove and discard the screw securing shock absorber to shock holder.

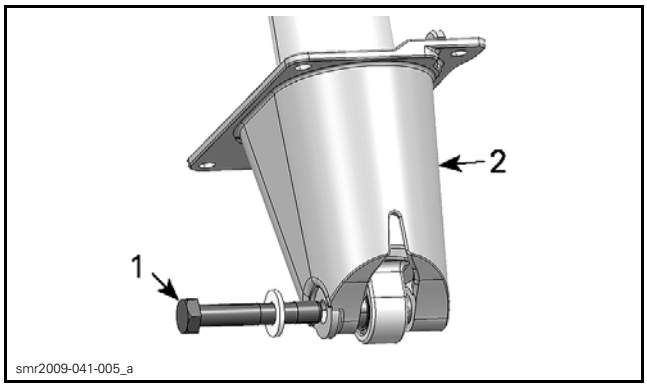

1. *Shock absorber lower screw (discard)*
2. *Shock holder*

7. Detach the top of shock absorber from mounting plate. Discard screw.

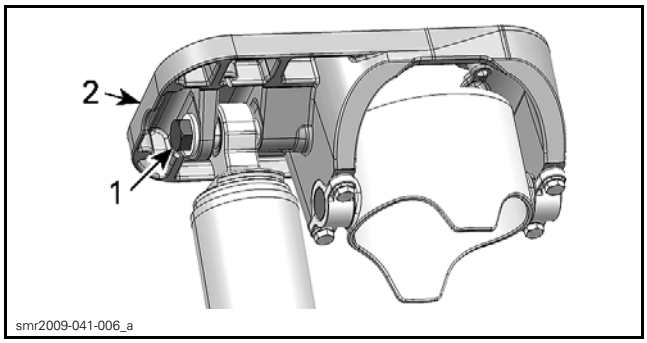

1. *Shock absorber upper screw (discard)*
2. *Mounting plate*

Inspecting the Shock Absorber

NOTE: Because of gas pressure, strong resistance is felt when compressing shock.

To inspect shock operation, or if suspecting an internal leak between oil chamber and gas chamber, check shock as follows:

1. Grab the shock absorber body firmly and press the rod end against a firm surface.
   1.1 Verify the compression stroke when the rod is fully extended.
   1.2 Make sure that shock absorber rod can be completely inserted in the shock body.
2. The shock should extend unassisted. Rod must come out at a steady speed.

If any problem is detected, replace the shock absorber.

Installing the Shock Absorber

The installation is the reverse of the removal procedure. However, pay attention to the following.

Secure the shock absorber using **NEW** screws.

TIGHTENING TORQUE	
Shock absorber screws	75 N•m (55 lbf•ft)

Install **NEW** shock holder screws and tighten them to specification.

TIGHTENING TORQUE	
Shock holder screws	25 N•m (18 lbf•ft)

SPRINGS

Spring Location

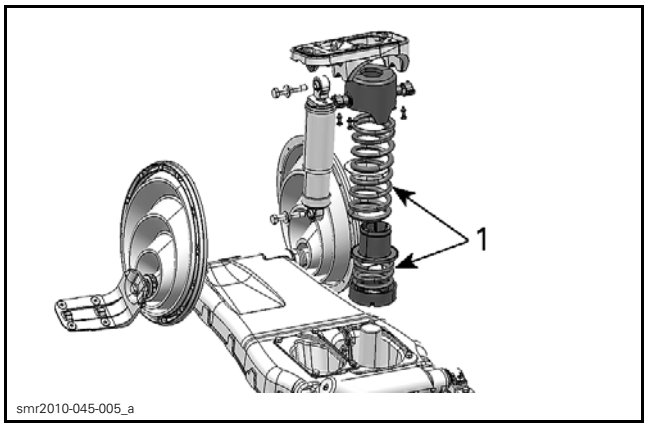

1. Springs

Removing the Spring

1. Remove *SHOCK ABSORBER*, see procedure in this subsection.
2. Remove the spring protector, the long spring, the spacer, the short spring and the spring holder.

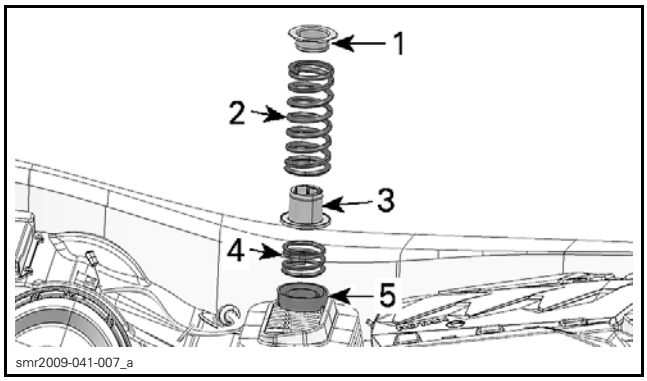

1. Spring protector
2. Long spring
3. Spacer
4. Short spring
5. Spring holder

Inspecting the Spring

Inspect both springs and replace if one of the following damage is detected:

– Crack in the paint
– Rust
– Other visible damage.

NOTE: If rust is limited to a 1/4 of the first coil, the spring should not be replaced.

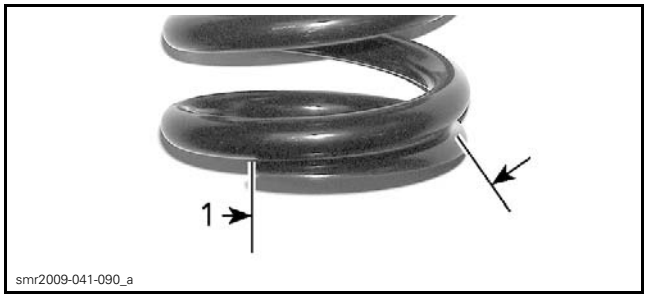

1. Zone where presence of rust is normal

Check the curve line of the long spring.

LONG SPRING SHAPE	
Maximum	7 mm (9/32 in)

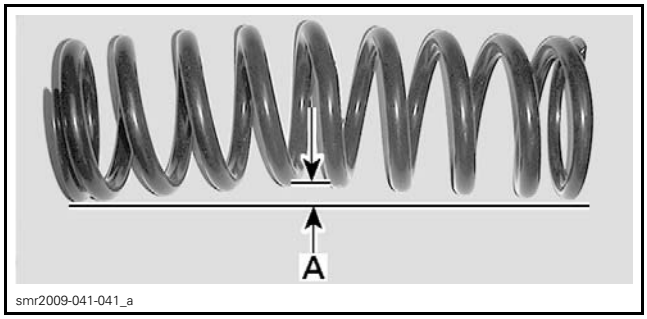

A. 7 mm (9/32 in) maximum

Replace spring if out of specification.

Installing the Spring

The installation is the reverse of the removal procedure.

SUSPENSION POSITION SENSOR

Suspension Position Sensor Location

The suspension position sensor is located on suspension base, under the hydraulic pump reservoir.

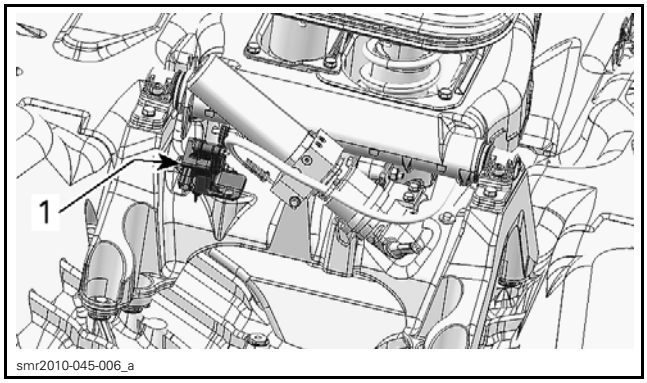

1. Suspension position sensor

Testing Suspension Position Sensor Input Voltage

At Sensor Connector

SUSPENSION POSITION SENSOR CONNECTOR		VOLTAGE
Pin 1	Pin 2	5 Vdc

Using the 6-pin Magneto Harness Tool

1. Connect B.U.D.S. Refer to *COMMUNICATION TOOLS AND B.U.D.S.* subsection.
2. Using B.U.D.S., raise suspension to the fully up position.

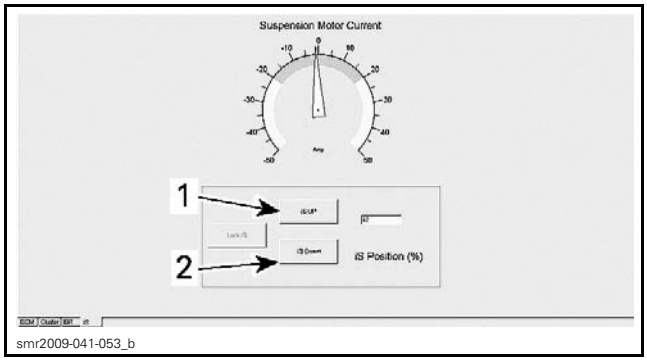

ACTIVATION AND iS TABS
1. UP
2. Down

NOTE: If the seat is moving up and the number does not increase in B.U.D.S. but it is between 10 and 100%, check the suspension position sensor fork.

3. Unplug the 6-pins connector from the iS module. The module is located in front of the battery in the same compartment.

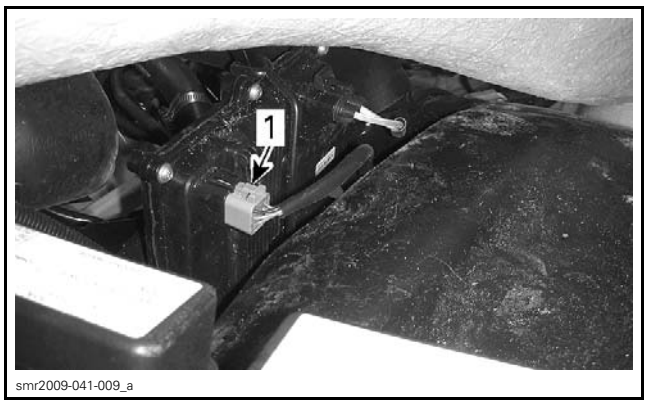

1. Suspension position sensor connector on iS module

4. Connect the MAGNETO HARNESS 6 PINS (P/N 295 000 136) to iS module for voltage checks.

5. Using the FLUKE 115 MULTIMETER (P/N 529 035 868), check voltage as per the following table.

SUSPENSION POSITION (% in B.U.D.S.)	MAGNETO HARNESS (wire lead color)		VOLTAGE (Vdc)
All positions	BK	BK/YL	4.99
100%	WH	BK/YL	3.23
100%	BK	WH	1.75
88%	WH	BK/YL	3.09
88%	BK	WH	1.89
75%	WH	BK/YL	2.99
75%	BK	WH	1.98
53%	WH	BK/YL	2.81
53%	BK	WH	2.16
35%	WH	BK/YL	2.68
35%	BK	WH	2.30

6. Remove the 6-pin magneto harness tool.

Testing Suspension Position Sensor Resistance

At iS Module Connector

1. Using the FLUKE 115 MULTIMETER (P/N 529 035 868), check resistance values on iS connector as per the following table.

SUSPENSION POSITION (% in B.U.D.S.)	iS MODULE (6-pin connector)		RESISTANCE Ω
All positions	4	6	1803 - 2203
100%	5	6	1957 - 2391
100%	4	5	1361 - 1663
88%	5	6	1904 - 2327
88%	4	5	1410 - 1724
75%	5	6	1871 - 2287
75%	4	5	1448 - 1770
53%	5	6	1799 - 2199
53%	4	5	1516 - 1852
35%	5	6	1752 - 2142
35%	4	5	1565 - 1913

Replacing the Suspension Position Sensor

1. Remove the deck extension. Refer to *BODY (GTX, RXT AND WAKE PRO SERIES)* subsection.
2. Remove the air intake tube. Refer to *AIR INTAKE SYSTEM* subsection.
3. Unplug the suspension position sensor connector.

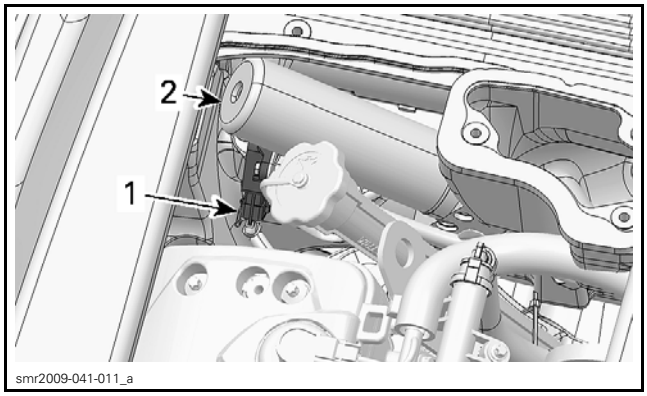

1. Sensor connector
2. Hydraulic pump reservoir

4. Remove screws securing the suspension position sensor.

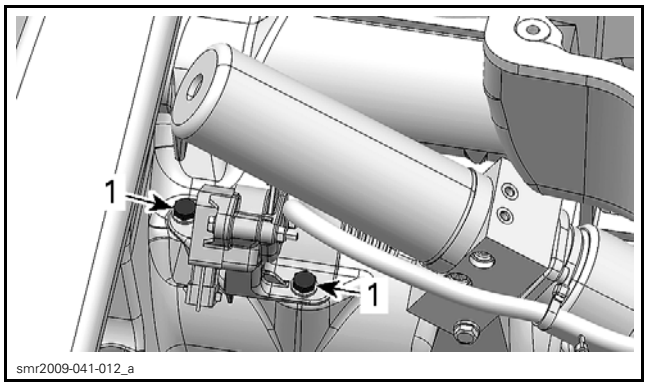

1. Retaining screws

5. Remove bolts securing the sensor and its cover to the sensor support and the sensor lever.

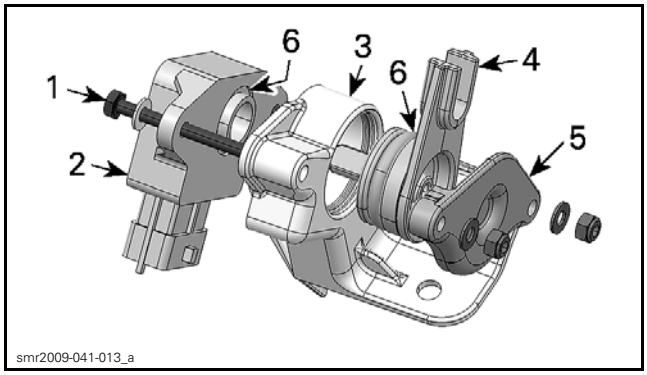

1. Retaining bolt
2. Sensor
3. Support
4. Lever
5. Cover
6. O-rings

NOTE: If water is present in the sensor always replace sensor even if it seems in good condition.

6. Check condition of O-rings on sensor and sensor lever.

7. Reinstall all parts.

NOTE: When reassembling parts, index sensor lever shaft with sensor inner slot. The sensor lever must be positioned to 180° with the sensor electrical connector.

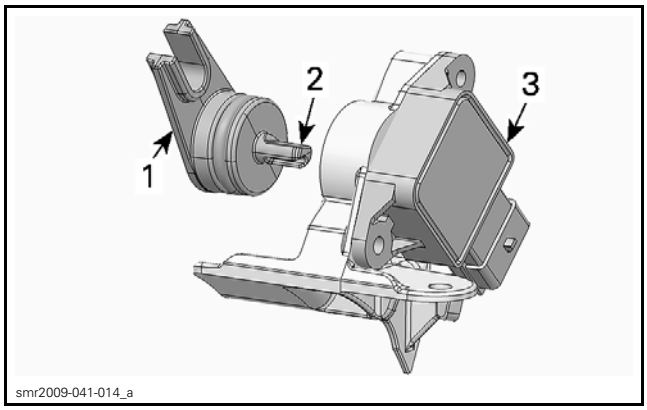

1. Lever
2. Lever shaft
3. Sensor

8. Reinstall and connect the sensor in watercraft.

iS MODULE

iS Module Location

The iS module is located inside hull, in front of the battery.

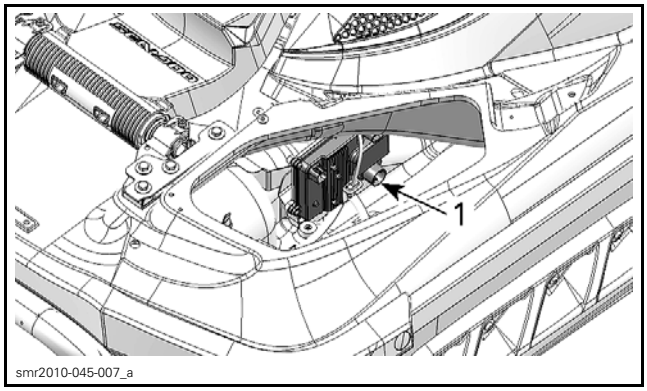

1. iS module

Testing iS Module Input Voltage (Switched Power)

Make sure fuse F1 is powered and in good condition.

Press the START/STOP button to activate the electrical system.

Install the D.E.S.S. key.

Using the FLUKE 115 MULTIMETER (P/N 529 035 868), perform the following test.

MULTIMETER LEAD POSITION		VOLTAGE (VDC)
Pin 1 of iS module 6-pin connector	Negative battery post	Battery voltage

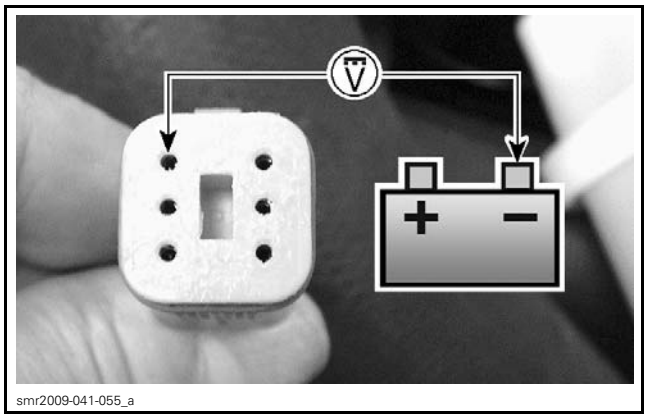
smr2009-041-055_a

Repeat the test using a test light.

TEST LIGHT POSITION		RESULT
Pin 1 of iS module 6-pin connector	Negative battery post	Bright light

If tests succeed, carry out the *TESTING iS MODULE INPUT VOLTAGE (BATTERY POWER)*.

If tests fail, check wiring and connectors between fuse box pin A8 and module 6-pin connector pin 1.

Testing iS Module Input Voltage (Battery Power)

Make sure fuse F7 is powered and in good condition.

Using the FLUKE 115 MULTIMETER (P/N 529 035 868), perform the following test.

iS MODULE 3-PIN CONNECTOR	BATTERY	VOLTAGE (VDC)
Pin 2	Negative post	Battery voltage

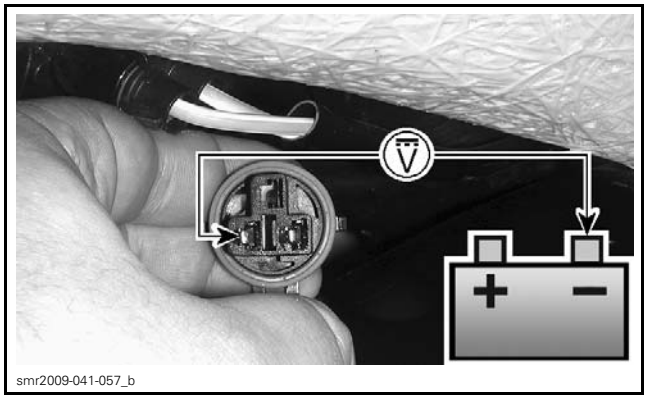
smr2009-041-057_b

PIN 2 TO BATTERY NEGATIVE POST

Repeat the test using a test light.

iS MODULE 3-PIN CONNECTOR	BATTERY	RESULT
Pin 2	Negative post	Bright light

If tests succeed, carry out *TESTING iS MODULE GROUND*.

If tests fails, check wiring and connectors between fuse box pin A2 and module 3-pin connector pin 2.

Testing iS Module Ground

Using the FLUKE 115 MULTIMETER (P/N 529 035 868), perform the following test.

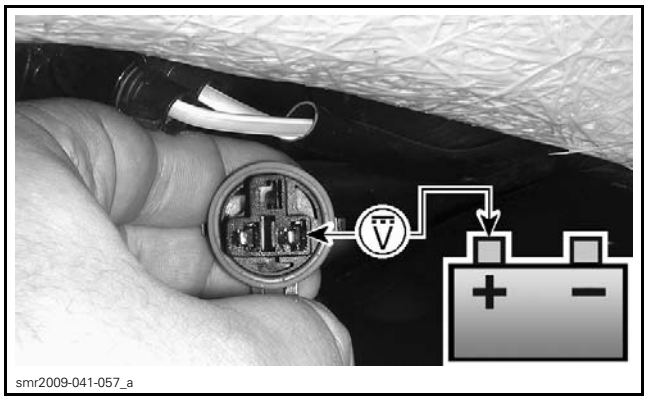
smr2009-041-057_a

PIN 1 TO BATTERY POSITIVE POST

iS MODULE 3-PIN CONNECTOR	BATTERY	RESULT
Pin 1	Positive post	Battery voltage

Repeat the test using a test light.

iS MODULE 3-PIN CONNECTOR	BATTERY	RESULT
Pin 1	Positive post	Bright light

If tests succeed, carry out *TESTING iS BUTTON USING B.U.D.S.*

If tests fails, check wiring and connectors module 3-pin connector pin 1 and engine ground.

Testing iS Module Output Voltage

At the hydraulic pump motor connector, connect multimeter leads.

Activate the iS either UP and DOWN with B.U.D.S. or with the UP or DOWN buttons.

There will be either a positive 12 Vdc or a negative 12 Vdc reading.

Activate the opposite UP or DOWN and the reading should reverse polarity.

If the voltage is as specified, carry out the same test using a 12 V test light to ensure the circuit can supply enough current to operate the hydraulic pump.

The light should be bright in both the UP or DOWN positions.

If tests fail, carry out the *TESTING iS MODULE INPUT VOLTAGE (SWITCHED POWER)*.

Removing the iS Module

1. Open boarding platform and remove the starboard storage bin.
2. Disconnect the suspension position sensor connector from the iS module.

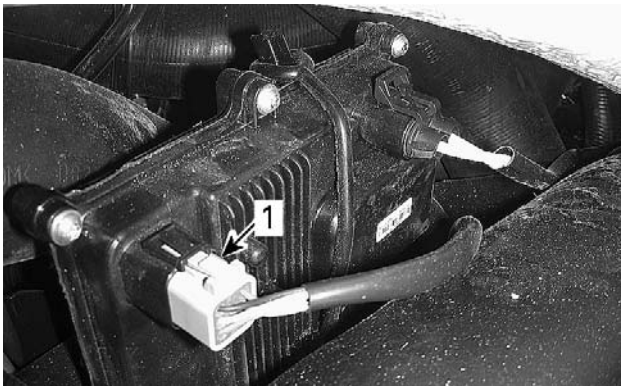

smr2009-041-034_a

1. Suspension position sensor connector

3. Detach the retaining strap.

smr2009-041-035_a

1. Retaining strap

4. Disconnect the hydraulic motor connector.

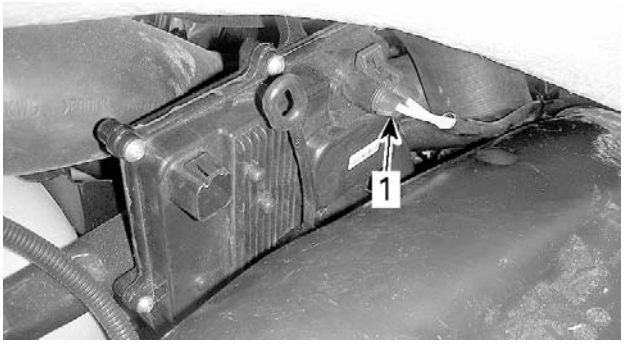

smr2009-041-036_a

1. Hydraulic motor connector

5. Disconnect the iS module input voltage connector.

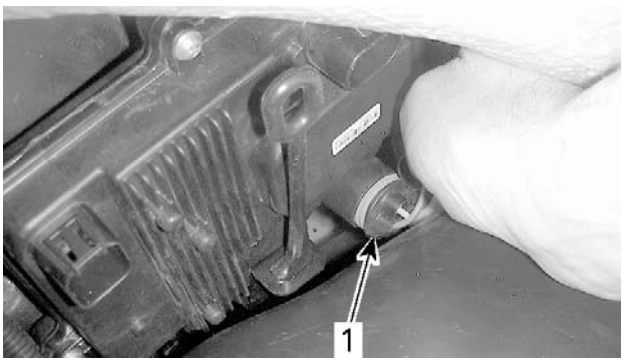

smr2009-041-037_a

1. iS module input voltage connector

NOTE: The locking tab of input voltage connector is located underneath.

6. Remove the iS module from watercraft.

Installing the iS Module

The installation is the reverse of the removal procedure.

HYDRAULIC PUMP

Hydraulic Pump Location

The hydraulic pump is located at the rear of the suspension base.

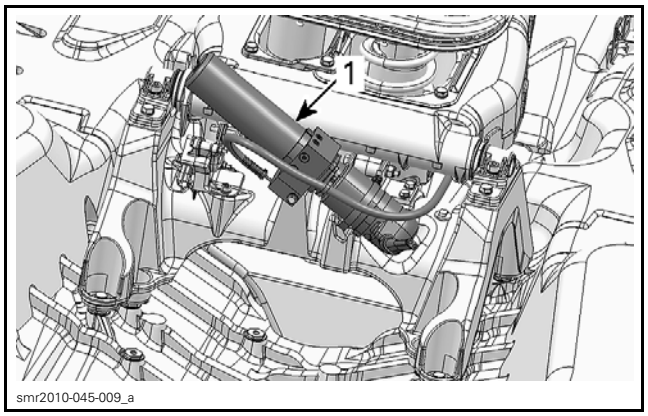

1. Hydraulic pump

Hydraulic Pump Recommended Fluid

Always use automatic transmission fluid (ATF) Dexron III.

NOTICE **Use ATF Dexron III only. Do not use fluids other than the recommended one, nor mix different types of fluids.**

Verifying the Hydraulic Pump Fluid Level

NOTE: The fluid level will drop slightly during break-in period because the actuator uses a small amount of fluid to lubricate its moving parts. If a large amount of fluid is required, check components for leaks.

Reservoir in Vehicle

Place the watercraft level (longitudinally and transversely). Make sure suspension is in DOCK MODE position.

The fluid should be near reservoir plug.

1. Fluid level

Reservoir Out of Vehicle

Place the reservoir vertically.

Using a ruler, measure the fluid level. The reservoir is full when fluid level reaches 130 mm ± 5 mm (5-1/8 in ± 13/64 in).

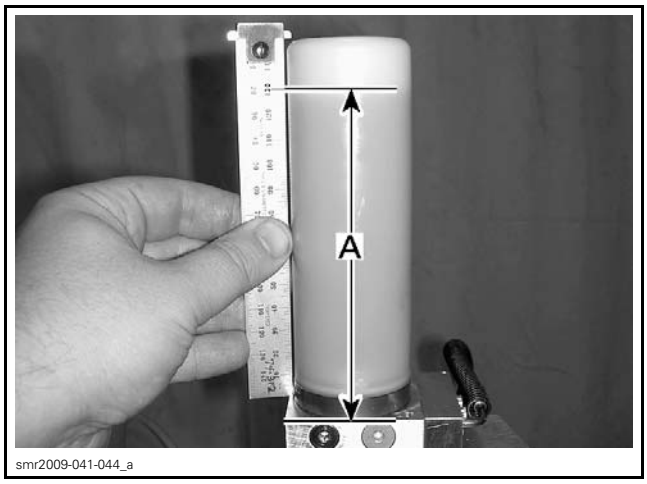

A. 130 mm ± 5 mm (5-1/8 in ± 13/64 in)

To Add Fluid

Remove the plug on the end of reservoir.

Using a syringe, fill up the reservoir to the recommended level.

Reinstall reservoir plug.

TIGHTENING TORQUE	
Reservoir plug	1 N•m (9 lbf•**in**)

Testing the Hydraulic Pump Operation

Connect a 30 A fused jumper from a 12-volt battery positive terminal and one pin of the hydraulic pump 2-pin connector.

Connect a jumper from battery negative terminal and the other pin of the hydraulic pump 2-pin connector.

The hydraulic pump should activate and suspension should go up or down.

Reverse the jumpers position at the pump connector. The suspension should reverse direction.

If the hydraulic pump does not run, replace hydraulic pump.

If hydraulic pump turns, carry out the *HYDRAULIC PUMP CURRENT DRAW* test to confirm pump operation.

Hydraulic Pump Current Draw

If the current draw is to high, the iS module activates an internal protection.

Connect watercraft to B.U.D.S. Refer to *COMMUNICATION TOOLS AND B.U.D.S.* subsection.

Select ACTIVATION and iS tabs.

Activate the suspension by pressing the UP and DOWN buttons and check monitor the ammeter in the B.U.D.S. page.

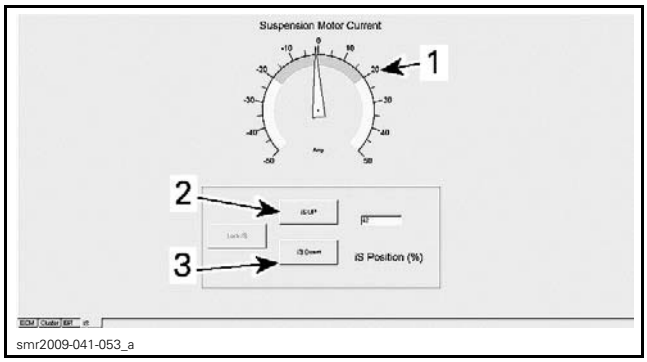

1. *B.U.D.S. page ammeter*
2. *UP button*
3. *DOWN button*

iS POSITION	CURRENT
UP	16 - 20 A
DOWN	15 - 18 A

If current is as per specification, carry out the *TESTING iS MODULE OUTPUT VOLTAGE*.

If current draw is low, check connections and wires.

If the current draw is excessive, replace the hydraulic pump.

Removing the Hydraulic Pump (as a Unit with Actuator)

To work on many parts of suspension system, the removal of the hydraulic pump and actuator as an unit is necessary.

1. Remove *SHOCK ABSORBER* and *SPRINGS*. See procedures in this subsection.
2. Unplug the hydraulic pump connector from the iS module.
3. Cut any locking ties securing the pump harness to watercraft harness.
4. Remove clamp and bolt securing the hydraulic pump from suspension base.

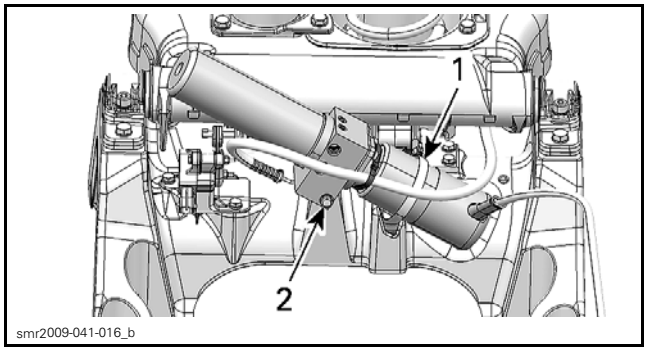

1. *Hydraulic pump clamp*
2. *Retaining bolt*

5. Remove actuator link bolt.

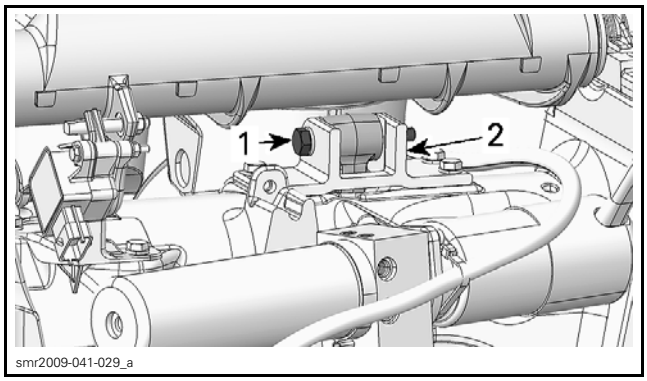

1. *Actuator link bolt*
2. *Link support on the top of suspension base*

6. Remove screws retaining the actuator holder.

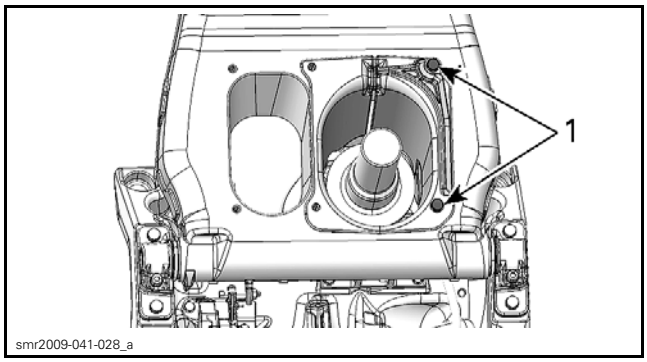

1. *Actuator holder screws*

7. Remove the suspension position sensor to avoid damaging it.
8. Remove screws securing both rear ends of front suspension arm to suspension base.

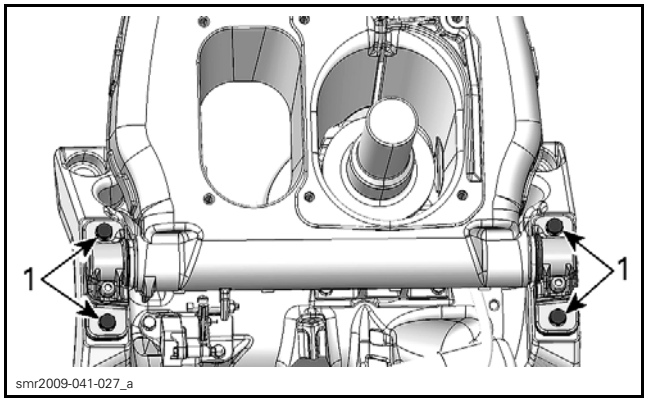

1. *Retaining screws*

9. Lift the rear of the front suspension arm to make room for hydraulic pump.
10. Remove hydraulic pump with actuator by lifting them through the suspension bellows opening.

Installing the Hydraulic Pump (as a Unit with Actuator)

The installation is essentially the reverse of the removal procedure. However, pay attention to the following.

Make sure to secure the actuator link to suspension base. Tighten actuator link bolt to specification.

TIGHTENING TORQUE	
Actuator link bolt	25 N•m (18 lbf•ft)

NOTICE **Failure to do so might result in spring failure.**

Hydraulic hose routing is very critical to avoid problems with hydraulic unit. Use the following illustration to route and attach the hydraulic hose properly.

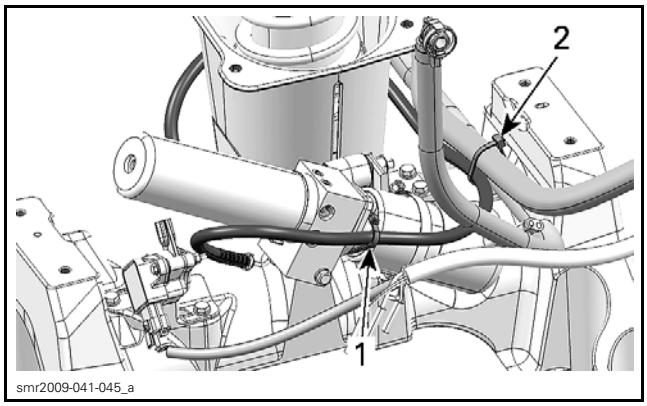

VIEW FROM THE REAR OF WATERCRAFT
1. *Secure hydraulic hose to hydraulic pump*
2. *Secure hydraulic hose, fuel hose and watercraft wiring harness*

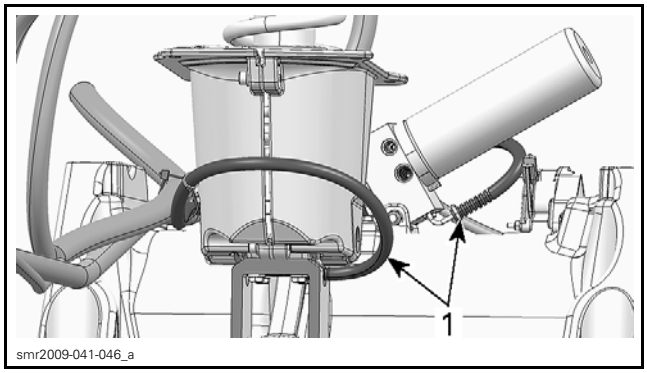

VIEW FROM THE FRONT OF WATERCRAFT
1. *Position both ends of hydraulic hose on same side*

Install the *FRONT SUSPENSION ARM*. See procedure in this subsection.

Removing the Hydraulic Pump (Without Actuator)

1. Remove the deck extension. Refer to *BODY (GTX, RXT AND WAKE PRO SERIES)* subsection.
2. Remove the air intake tube. Refer to *AIR INTAKE SYSTEM* subsection.
3. Unplug the hydraulic pump connector from the iS module.
4. Cut any locking ties securing the pump harness to watercraft harness.
5. Cut locking tie securing the hydraulic hose to pump.

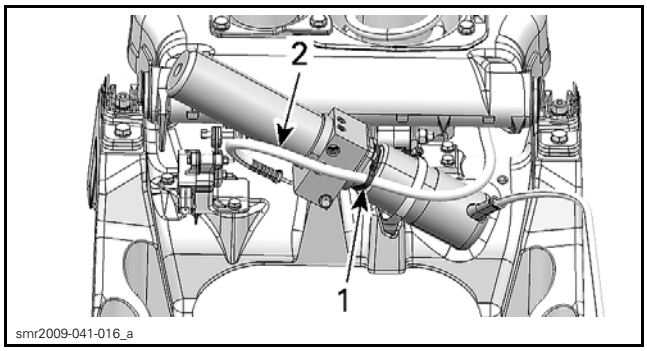

1. *Cut this locking tie*
2. *Hydraulic hose*

6. Unscrew the retaining clamp completely and remove it.

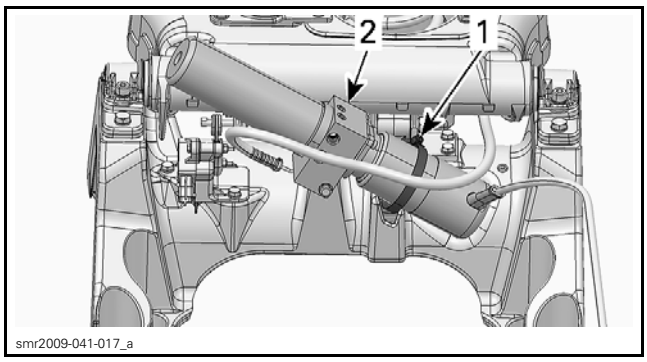

1. *Retaining clamp*
2. *Hydraulic pump*

7. Remove hydraulic pump retaining bolt.

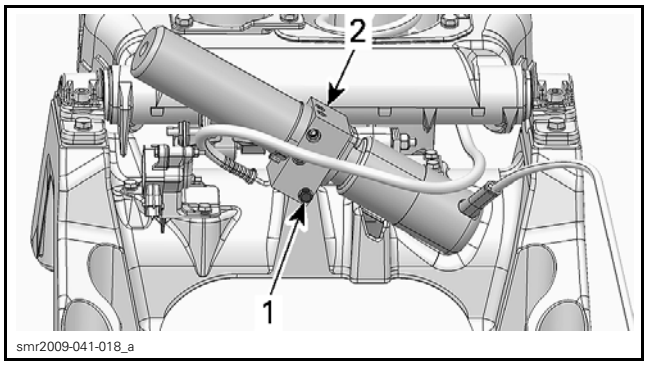

1. Retaining bolt
2. Hydraulic pump

8. At the bottom of pump housing, remove socket screw securing hydraulic hose lock.

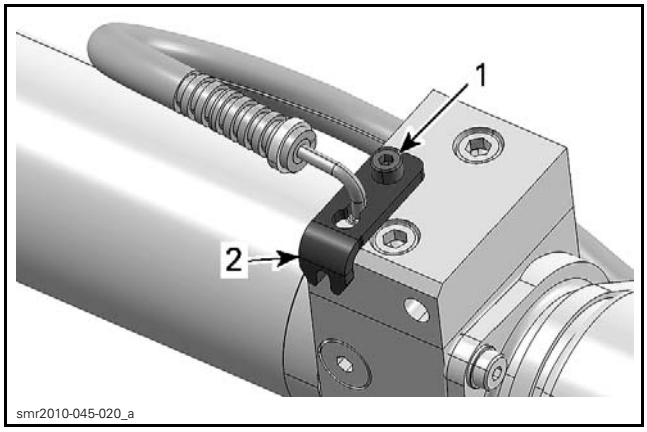

1. Socket screw
2. Hydraulic hose lock

9. Remove hose from pump and plug hose to avoid oil spillage.
10. Place your finger on pump opening and remove pump from PWC.

NOTE: Wipe any oil spillage.

Installing the Hydraulic Pump (Without Actuator)

1. Install hydraulic hose on pump and secure hose using the hydraulic hose lock.

NOTE: The hose must turn freely. Do not insert hose into lock hook.

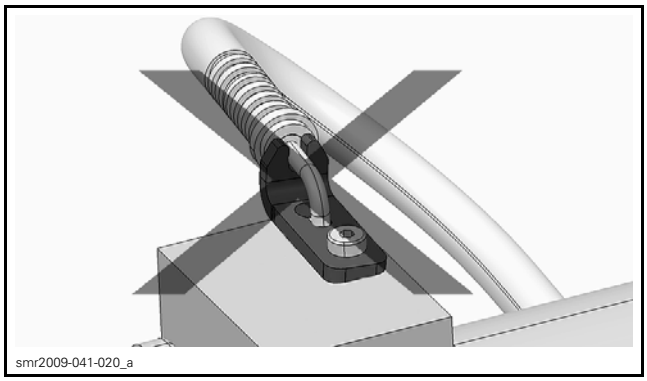

WRONG POSITION

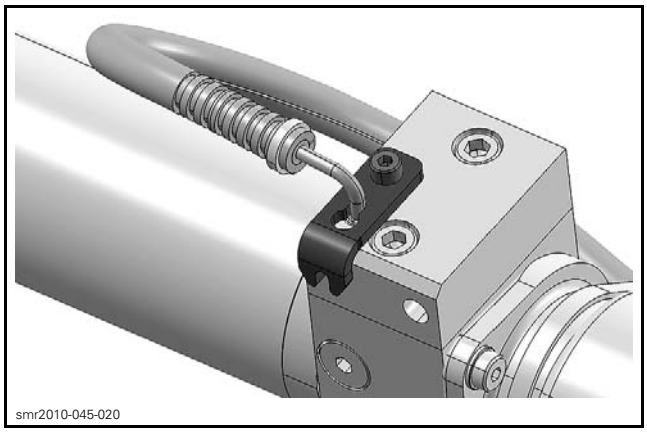

RECOMMENDED POSITION

2. Apply LOCTITE 243 (BLUE) (P/N 293 800 060) on threads of hydraulic hose lock screw.

TIGHTENING TORQUE	
Hydraulic hose lock screw	8 N•m (71 lbf•**in**)

3. Secure hydraulic pump to suspension base.

TIGHTENING TORQUE	
Pump retaining screw	10 N•m (89 lbf•**in**)
Retaining clamp	2 N•m (18 lbf•**in**)

4. Secure hose to reservoir with a new locking tie.
5. Route pump harness and secure it with new locking ties.
6. Connect the hydraulic pump connector to iS module.
7. Install a weight of 90 kg (200 lb) on moving deck and using suspension controls on steering, cycle the suspension fully up and fully down 3 times. This action will remove air bubbles trapped into hose and pump during installation.
8. Check for leaks.
9. Install all other removed parts.

ACTUATOR

Actuator Location

The actuator is located at the front of the suspension base under suspension springs.

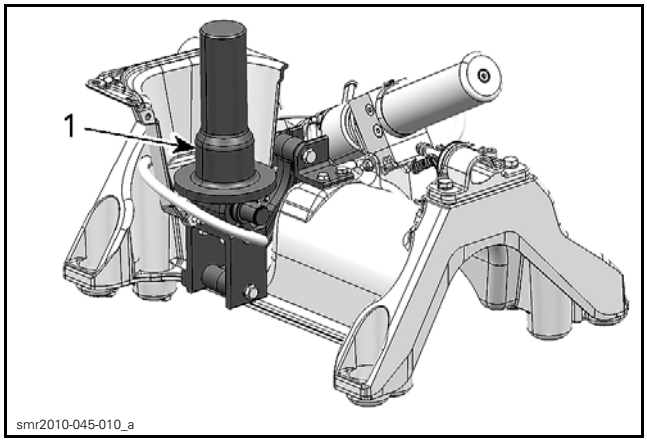

1. *Actuator*

Inspecting the Actuator

Check actuator for leaks at hose opening and around inner piston.

Replace actuator if any leak is detected.

Removing the Actuator

1. Refer to *HYDRAULIC PUMP REMOVAL (AS A UNIT WITH ACTUATOR)* and remove the pump from the PWC.
2. Remove and discard the screw securing actuator link to alignment support.

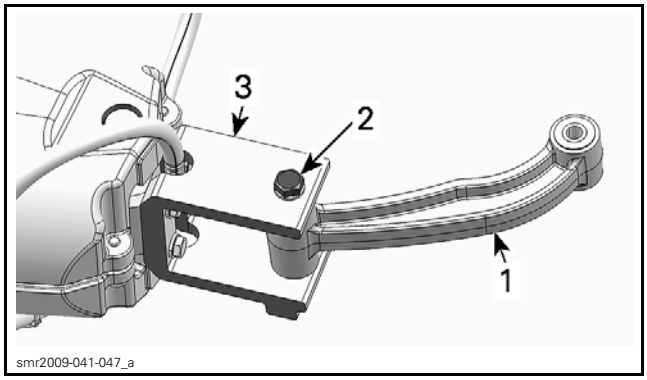

1. *Actuator link*
2. *Retaining screw*
3. *Alignment support*

3. Remove the alignment support from actuator holder. Discard screws.

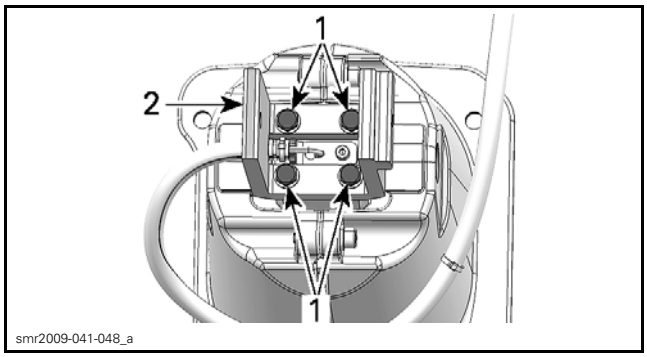

1. *Retaining screws*
2. *Alignment support*

4. Turn actuator up side down and remove hydraulic hose.

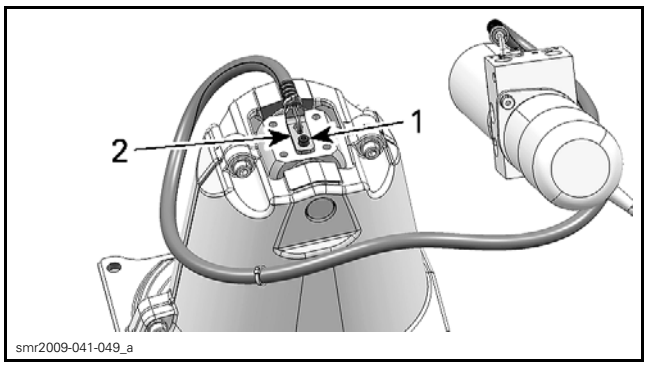

1. *Retaining socket screw*
2. *Hydraulic hose lock*

5. Remove and discard the three socket screws securing actuator holder halves and split the actuator holder.

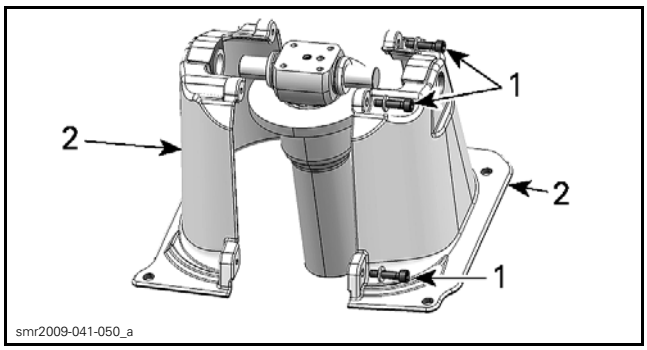

1. *Socket screws*
2. *Actuator holder halves*

Installing the Actuator

The installation is the reverse of the removal procedure. However, pay attention to the following.

Install hydraulic hose in accordance with the following illustration.

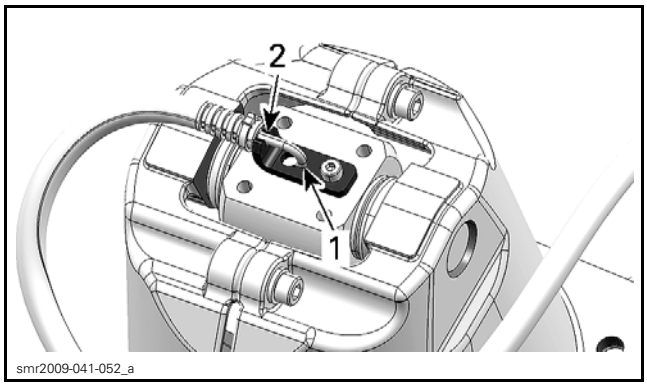

1. *Hose fully inserted in lock slot*
2. *Position hydraulic hose in lock hook*

Apply LOCTITE 243 (BLUE) (P/N 293 800 060) on threads of lock screw.

Tighten screw to specification.

TIGHTENING TORQUE	
Hydraulic hose lock screw	8 N•m (71 lbf•**in**)

Install the hydraulic pump in watercraft. Make sure to route the hydraulic hose properly. See *INSTALLING THE HYDRAULIC PUMP (AS A UNIT WITH ACTUATOR)* in this subsection.

Install a weight of 90 kg (200 lb) on moving deck and using suspension controls on steering, cycle the suspension fully up and fully down 3 times. This action will remove air bubbles trapped into hose and pump during installation.

Check for leaks.

Install all other removed parts.

LATERAL SUPPORT

Lateral Support Location

The lateral supports are located on both side of the fixed deck to support the moving deck.

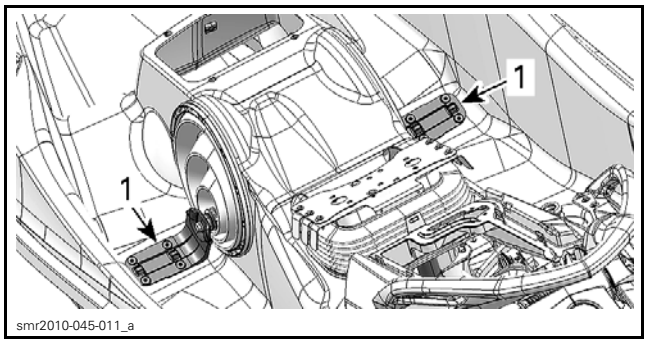

1. *Lateral supports*

Removing the Lateral Support

NOTE: The following instruction can be used for RH or LH support.

1. Remove the moving deck. Refer to *BODY (GTX, RXT AND WAKE PRO SERIES)* subsection.
2. Cut the Oetiker clamp retaining lateral bellows to lateral support.

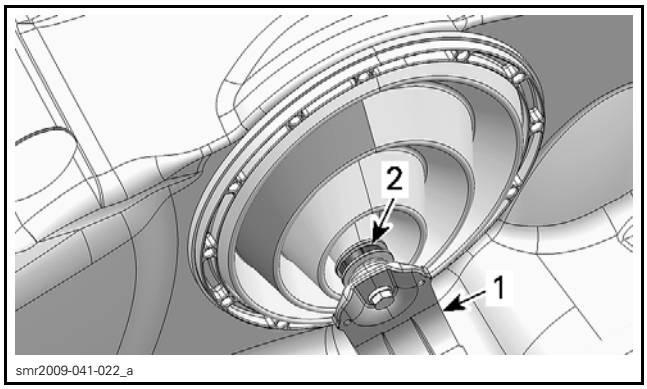

1. *Lateral support*
2. *Oetiker clamp*

3. Remove the lateral support screw.

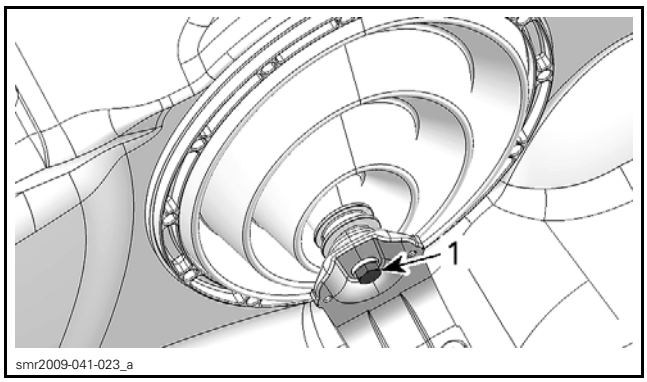

1. *Lateral support screw*

4. Remove lateral support from lateral bellows.

Installing the Lateral Support

The installation is the reverse of the removal procedure. However, pay attention to the following.

Apply soapy water solution on bellows opening and insert the lateral support.

Index lateral supports with the front suspension shaft ends. Lateral supports can be inserted in one position only.

Tighten lateral support screw to specification.

TIGHTENING TORQUE	
Lateral support screw	48 N•m (35 lbf•ft)

Install a **new** Oetiker clamp. Position the ear of clamp rearwards.

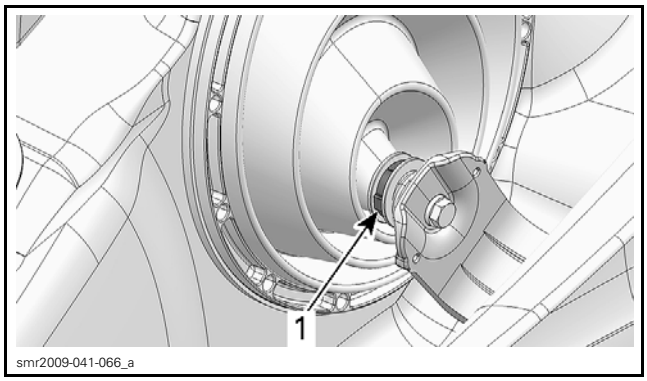

RH SIDE SHOWN
1. *Ear of clamp rearwards*

LATERAL BELLOWS

Lateral Bellows Location

The lateral bellows are located on each side of the fixed deck.

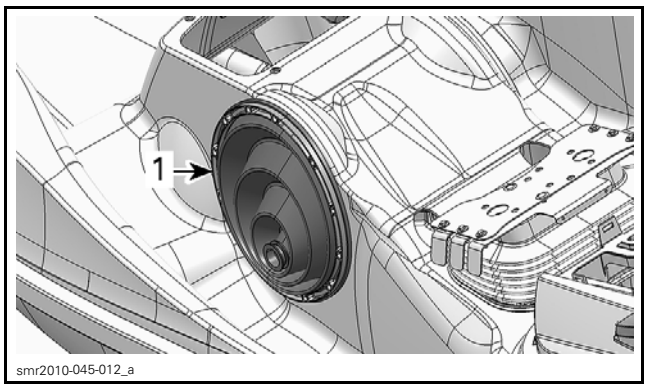

1. *LH lateral bellows shown*

Removing the Lateral Bellows

1. Remove lateral support screw.

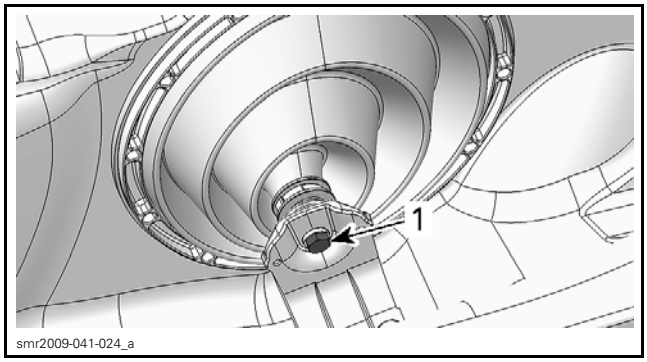

1. *Lateral support screw*

2. Disconnect lateral support from suspension shaft.

3. Using the SUPERTANIUM DRILL BIT 3/16" (P/N 529 031 800), remove all rivets (12) securing the lateral bellows ring to body.

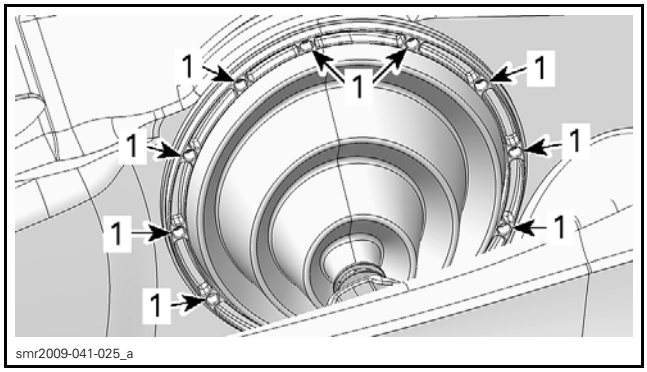

1. *Rivet location*

4. Remove lateral ring.
5. Cut Oetiker clamp securing bellows to lateral support.
6. Separate lateral support from bellows.

Installing the Lateral Bellows

The installation is the reverse of the removal procedure. However, pay attention to the following.

Apply soapy water solution on bellows opening and insert the lateral support.

Index suspension shaft with the lateral support. The lateral support can be inserted in one position only.

Install the retaining ring. Align the ring pin with holes in bellows and body.

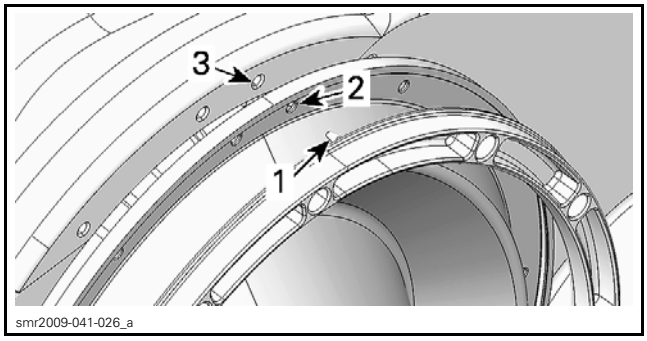

1. *Ring pin*
2. *Bellows alignment hole*
3. *Body hole*

Install new rivets. If the head of rivet tool cannot be inserted in ring opening, use the sleeve (P/N 707 000 181) to offset the rivet tool and well lean the rivet head against ring.

Index lateral supports with the front suspension shaft ends. Lateral supports can be inserted in one position only.

Install **new** lateral support screw.

Tighten lateral support screw to specification.

TIGHTENING TORQUE	
Lateral support screw	48 N•m (35 lbf•ft)

Install a new Oetiker clamp. Position the ear of clamp rearwards.

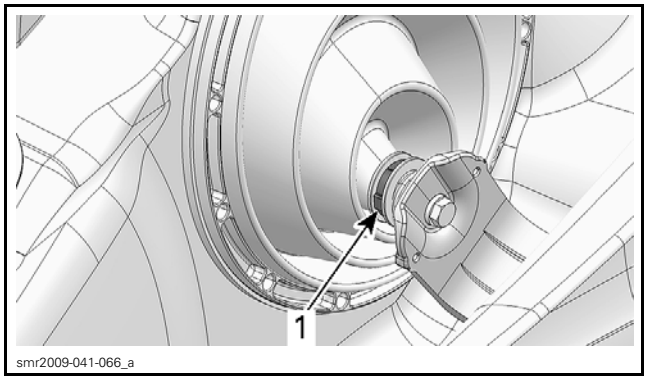

RH SIDE SHOWN
1. Ear of clamp rearwards

FRONT SUSPENSION ARM

Front Suspension Arm Location

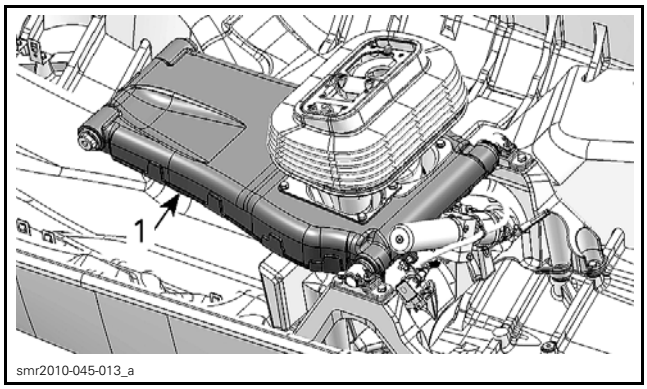

FIXED DECK REMOVED FOR CLARITY
1. Front suspension arm

Removing the Front Suspension Arm

1. Remove the moving deck. Refer to *BODY (GTX, RXT AND WAKE PRO SERIES)* subsection.
2. Remove the engine. Refer to *ENGINE REMOVAL AND INSTALLATION* subsection.
3. Remove both lateral support screws.

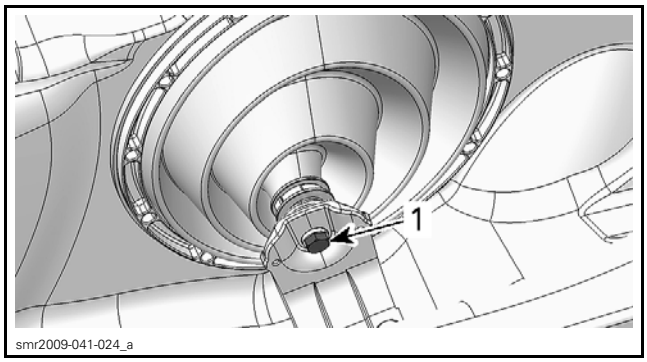

RH SIDE SHOWN
1. Lateral support screw

4. Disconnect lateral supports from suspension arm shaft.
5. Refer to *REMOVING THE HYDRAULIC PUMP (AS A UNIT WITH ACTUATOR)* and remove the pump from the watercraft.
6. Remove screws securing both shaft supports to suspension base.

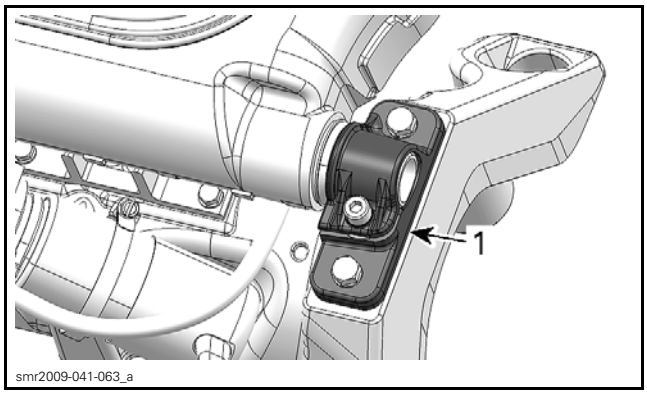

1. Shaft support (one on each side)

7. Move front suspension arm rearward to remove it from the watercraft.

Installing the Front Suspension Arm

The installation is the reverse of the removal procedure. However, pay attention to the following.

If a shaft support has been loosened from the suspension arm shaft, see *SUSPENSION ARM SHAFTS* for proper installation procedure.

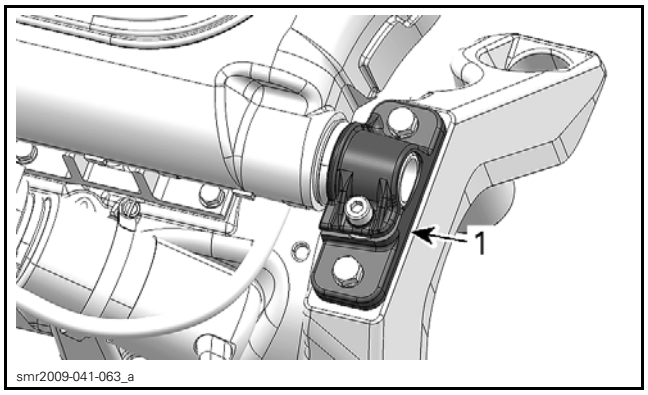

1. Shaft support (one on each side)

SUSPENSION BASE

Suspension Base Location

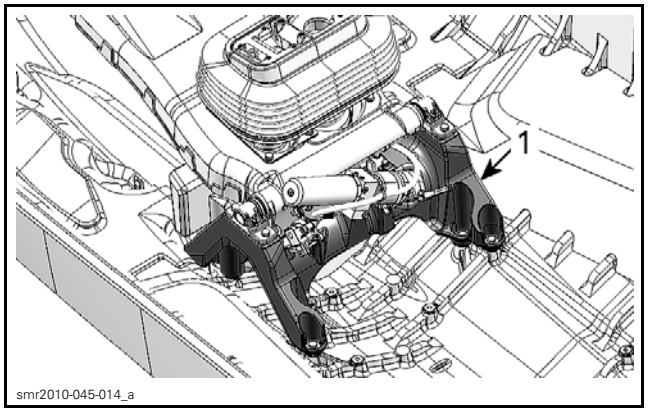

FIXED DECK REMOVED FOR CLARITY
1. Suspension base

Removing the Suspension Base

1. Refer to the appropriate procedures and remove the following parts:
   - Moving deck
   - Engine
   - Shock absorber and springs
   - Hydraulic pump (with actuator)
   - Suspension position sensor.
2. Using a marker, **trace the shape of suspension base at the bottom of the hull** to reposition it at the same place.
3. Remove screws securing both shaft supports to suspension base.

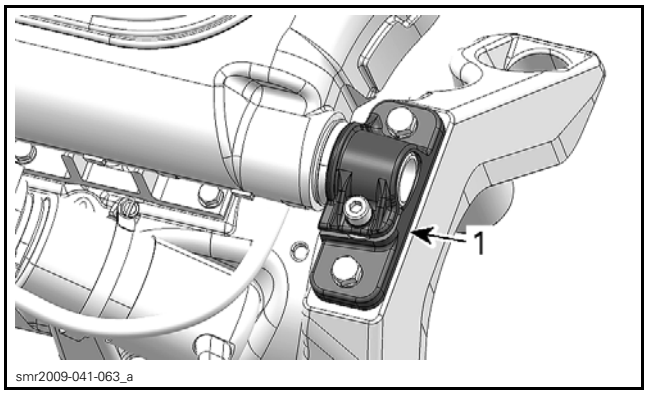

1. Shaft support (one on each side)

4. Remove and discard suspension base screws.

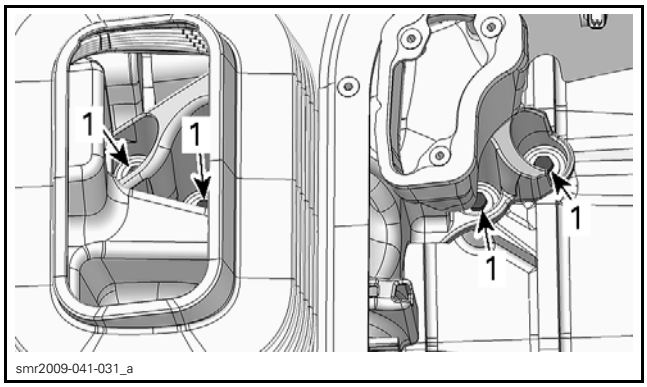

STARBOARD SIDE
1. Suspension base screws

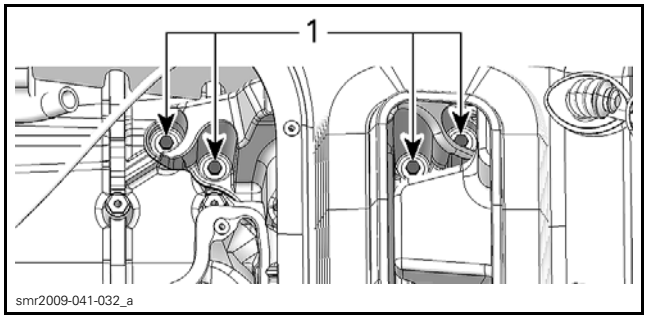

PORT SIDE
1. Suspension base screws

5. Remove suspension base along with the rear vent duct.

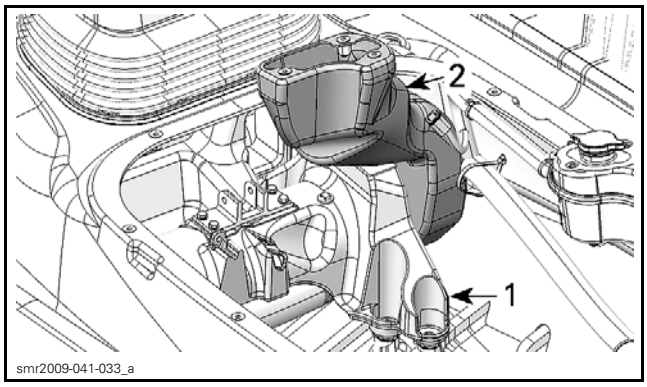

1. Suspension base
2. Rear vent duct

Installing the Suspension Base

The installation is the reverse of the removal procedure. However, pay attention to the following.

1. Install the suspension base.
   1.1 Position the base in accordance with the reference marks previously drawn at the bottom of the hull.

   NOTE: If there is no mark, see *INSTALLING THE SUSPENSION BASE WITHOUT REFERENCE MARKS*.

   1.2 Install NEW suspension base screws.
   1.3 Tighten suspension base screws to specification as per the following sequence.

TIGHTENING TORQUE	
Suspension base screws	27 N•m (20 lbf•ft)

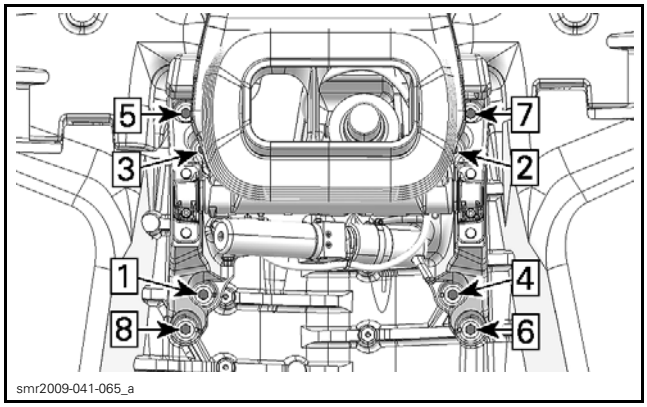

TIGHTENING SEQUENCE

2. Install NEW shaft support screws to secure front suspension arm.
3. Tighten shaft support screws to specification.

TIGHTENING TORQUE	
Shaft support screws	25 N•m (18 lbf•ft)

4. Refer to the appropriate procedures and install all other removed parts.
   – Actuator and hydraulic pump
   – Front suspension arm
   – Shock absorber and springs
   – Engine
   – Moving deck.

Installing the Suspension Base without Reference Marks

1. Install the suspension base in watercraft using NEW screws. Do not tighten them yet.
2. Install NEW shaft support screws to secure front suspension arm.
3. Tighten shaft support screws to specification.

TIGHTENING TORQUE	
Shaft support screws	25 N•m (18 lbf•ft)

4. Install lateral supports.
   4.1 Index lateral supports with the front suspension shaft ends. Lateral supports can be inserted in one position only.
   4.2 Tighten lateral support screws to specification.

TIGHTENING TORQUE	
Lateral support screws	48 N•m (35 lbf•ft)

5. Align suspension base in watercraft.
   5.1 On both sides, measure the distance between the end of lateral support and fixed deck.

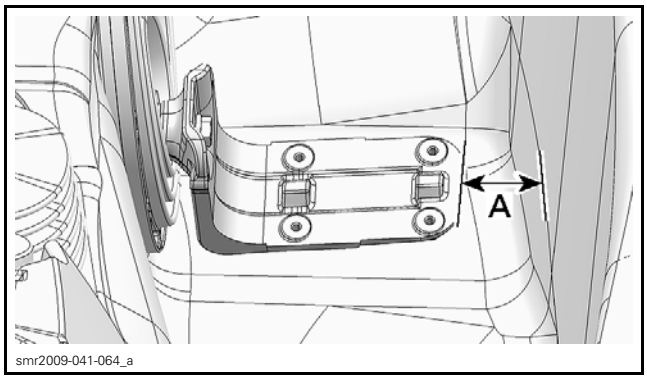

A. Same distance on LH and RH sides

   5.2 If required, move suspension base until both distances are equal.
   5.3 Tighten suspension base rear screws to specification as per the following sequence.

TIGHTENING TORQUE	
Suspension base screws	27 N•m (20 lbf•ft)

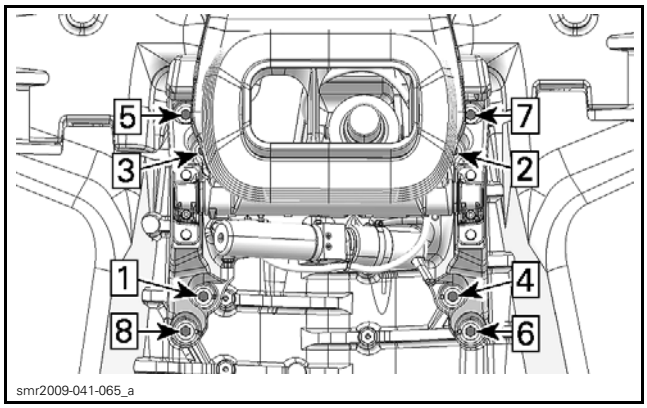

TIGHTENING SEQUENCE

6. Refer to the appropriate procedures and install all other removed parts.
   - Actuator and hydraulic pump
   - Shock absorber and springs
   - Engine
   - Moving deck.

REAR SUSPENSION ARM

Rear Suspension Arm Location

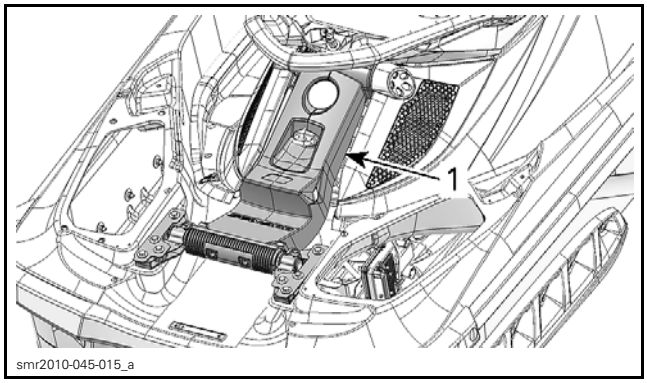

1. *Rear suspension arm*

Removing the Rear Suspension Arm

1. Open the boarding platform.
2. Remove bolts securing both rear suspension arm covers.

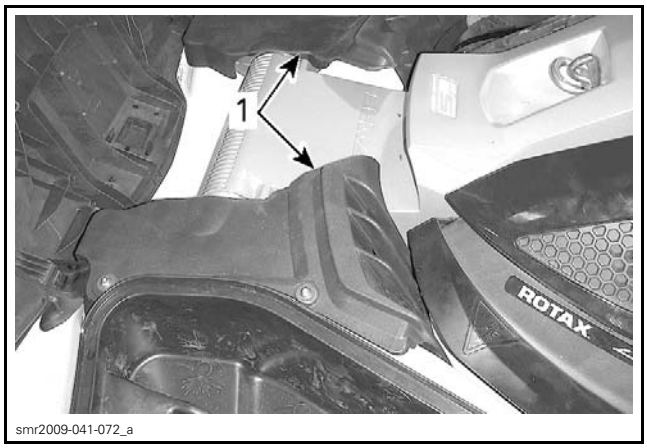

1. *Rear suspension arm cover*

3. Unclip and remove both lateral rear panels.

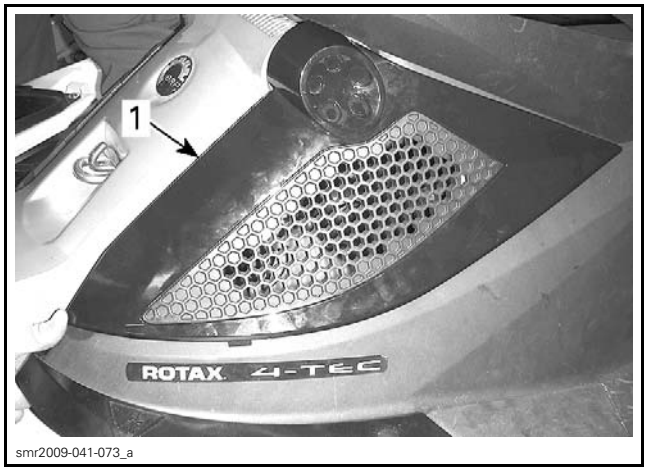

1. *RH lateral rear panel*

4. Mark position of rear suspension arm brackets for proper reinstallation.
5. Remove and discard screws securing rear suspension arm to fixed deck.

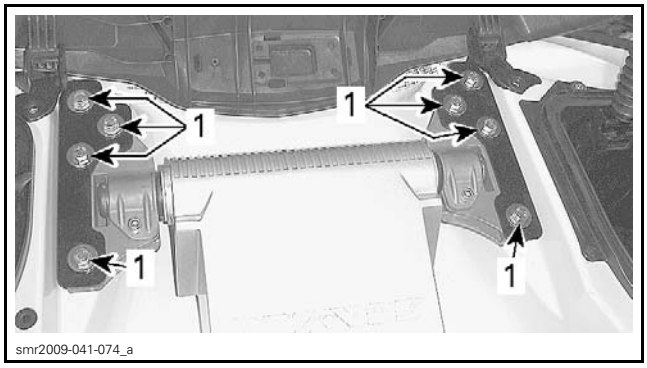

1. *Rear suspension arm screws*

6. Remove and discard screws securing the top of rear suspension arm.

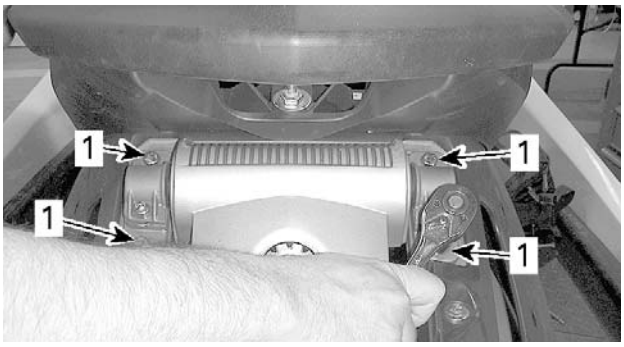

smr2009-041-075_a

1. *Retaining screws*

7. Remove the rear suspension arm from watercraft.

Installing the Rear Suspension Arm

1. Using NEW screws, install the top of rear suspension arm.

NOTE: If the upper arm shaft or one of its arm shaft support has been removed or loosened, refer to *SUSPENSION ARM SHAFTS* for proper installation procedure.

2. Tighten upper arm support screws to specification.

TIGHTENING TORQUE	
Upper arm support screws	25 N•m (18 lbf•ft)

3. Carefully lower and secure the rear suspension arm to the fixed deck.
   3.1 Position the rear suspension arm brackets in accordance with the reference marks previously draw on fixed deck.

   NOTICE **If no mark was traced, refer to *INSTALLING THE REAR SUSPENSION ARM WITHOUT REFERENCE MARKS* for proper procedure to install and align the rear suspension arm.**

   3.2 Install NEW screws to secure rear suspension arm brackets.
   3.3 Tighten rear suspension arm screws to specification.

TIGHTENING TORQUE	
Rear suspension arm screws	25 N•m (18 lbf•ft)

Installing the Rear Suspension Arm Without Reference Marks

1. Lower the rear suspension arm on fixed deck.
2. Position the square openings of rear suspension arm brackets so that the threaded inserts in fixed deck are centered.

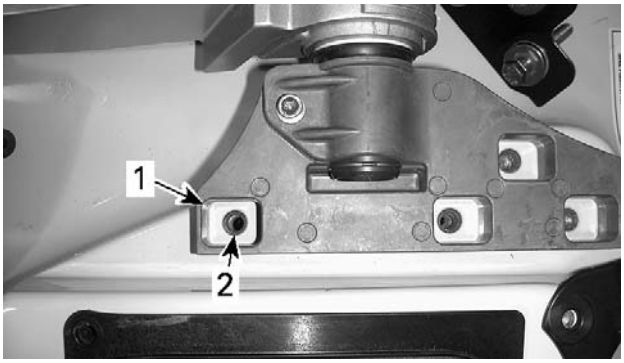

smr2009-041-076_a

1. *Square opening*
2. *Threaded insert*

3. On each bracket, install the retaining plate and one screw.
4. Install a weight of 90 kg (200 lb) on PWC to lower the moving deck.
5. Check moving deck position in comparison to fixed deck.
   5.1 Check the gap between moving deck wipers and fixed deck. It should be the same on both sides.
   5.2 Check front and rear gaps. Moving deck should be able to move without having contact with the fixed deck.
   5.3 Reposition rear suspension arm brackets on fixed deck until positioning of moving deck is satisfactory.
6. Secure the rear suspension arm to the fixed deck.
   6.1 Install NEW screws to secure rear suspension arm brackets.
   6.2 Remove and replace screws installed during alignment.
   6.3 Tighten rear suspension arm screws to specification.

TIGHTENING TORQUE	
Rear suspension arm screws	25 N•m (18 lbf•ft)

SUSPENSION ARM SHAFTS

Removing the Front Suspension Arm Shaft

1. Remove the *FRONT SUSPENSION ARM*, see procedure in this subsection.

2. Remove and discard socket screws securing supports to shaft.
3. Separate arm shaft supports from arm shaft.

Installing the Front Suspension Arm Shaft

1. To reinstall the shaft, insert it in the suspension arm.
2. Install a support on each end of shaft.
3. Secure the LH arm shaft support to suspension base using **NEW** support screws.

NOTE: Make sure to insert the support pin into suspension base hole.

4. Tighten the LH support screws to specification.

TIGHTENING TORQUE	
Shaft support screws	25 N•m (18 lbf•ft)

5. Apply a force on the RH support to move it on the left side.

NOTICE **Make sure arm shaft is fully inserted, it must lean against the arm shaft support.**

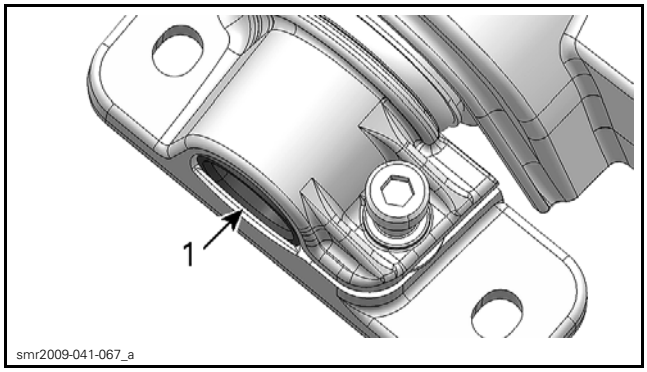

1. Arm shaft against its support

6. Install **NEW** support screws and tighten them to specification.

TIGHTENING TORQUE	
Shaft support screws	25 N•m (18 lbf•ft)

7. Secure both supports to shaft using **NEW** socket screws.
8. Tighten shaft screws to specification.

TIGHTENING TORQUE	
Shaft screws	12 N•m (106 lbf•**in**)

Removing the Rear Suspension Arm Upper Shaft

1. Unclip and remove both lateral rear panels.

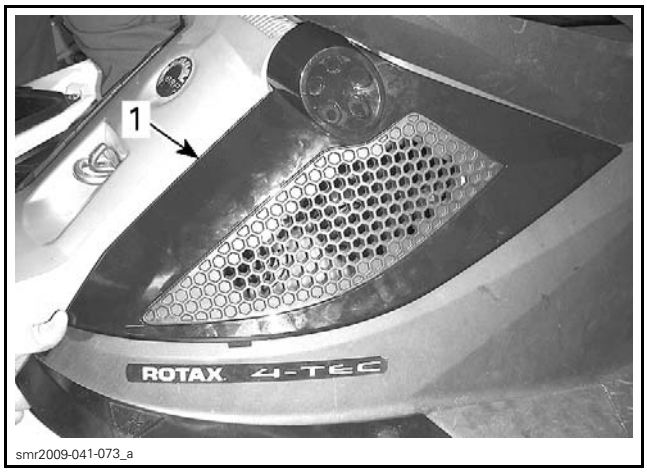

1. RH lateral rear panel

2. Remove arm shaft support screws.

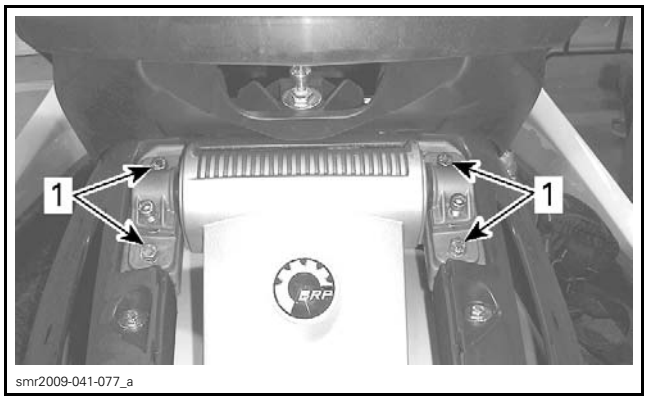

1. Arm shaft support screws

3. Remove and discard socket screws securing supports to arm shaft.
4. Separate arm shaft support from arm shaft.

Installing the Rear Suspension Arm Upper Shaft

1. To reinstall the shaft, insert it in the rear arm.
2. Install a support on each end of shaft.
3. Secure the LH support to rear arm holder using **NEW** support screws.

NOTE: Make sure to insert the support pin into holder hole.

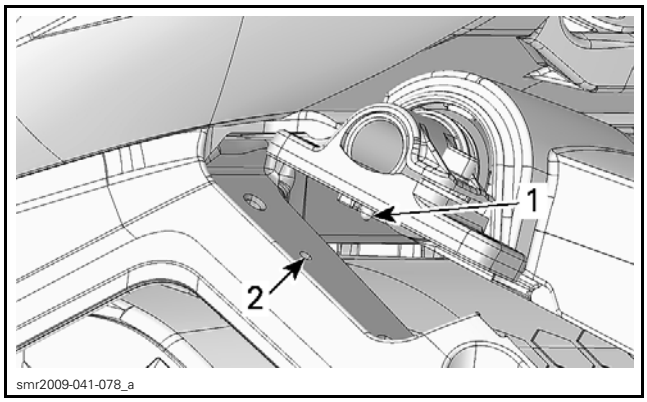

1. *Support pin*
2. *Holder hole*

4. Tighten the LH support screws to specification.

TIGHTENING TORQUE	
Upper arm support screws	25 N•m (18 lbf•ft)

5. Apply a force on the RH support to move it to the left side.

NOTE: A bar clamp can be used to compress both supports together.

NOTICE **Make sure arm shaft is fully inserted, it must lay flush against the arm shaft support.**

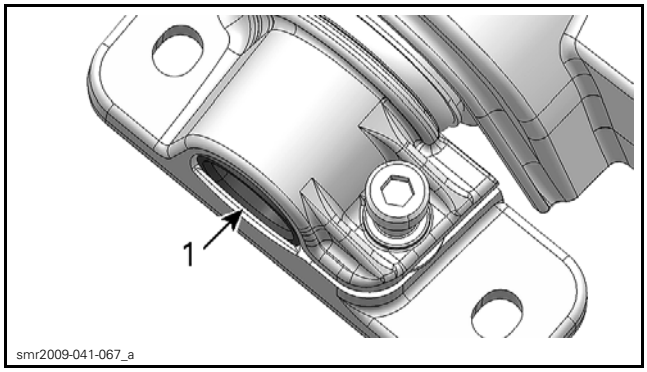

1. *Arm shaft against its support*

6. Install NEW support screws and tighten them to specification.

TIGHTENING TORQUE	
Upper arm support screws	25 N•m (18 lbf•ft)

7. Secure both supports to shaft using NEW socket screws
8. Tighten upper shaft screws to specification.

TIGHTENING TORQUE	
Upper shaft screws	12 N•m (106 lbf•**in**)

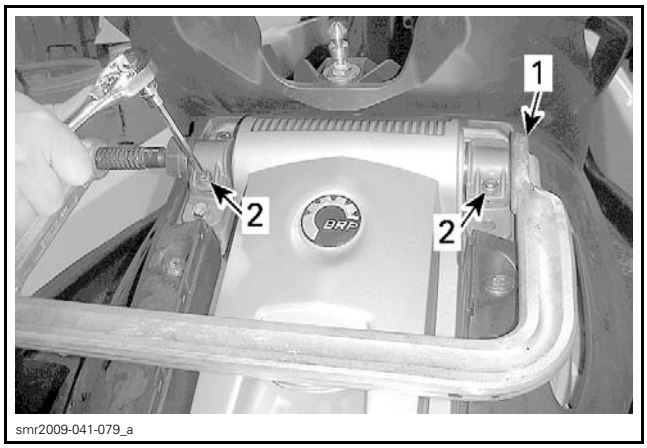

1. *Bar clamp*
2. *New socket screws*

Removing the Rear Suspension Arm Lower Shaft

1. Open the boarding platform.
2. Remove bolts securing both rear suspension arm covers.

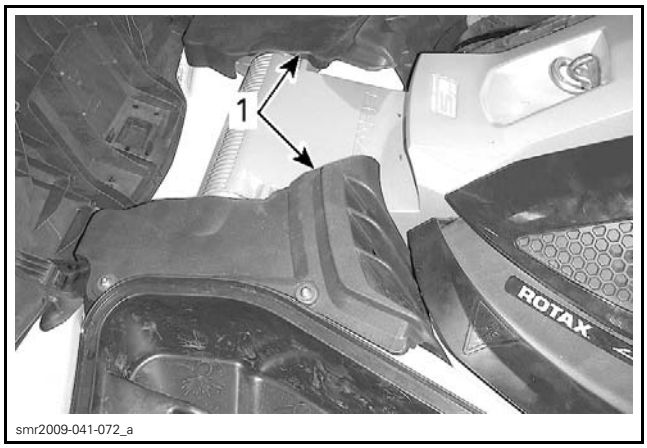

1. *Rear suspension arm cover*

3. **Mark position of rear suspension arm brackets for proper reinstallation.**
4. Remove and discard screws securing rear suspension arm to fixed deck.

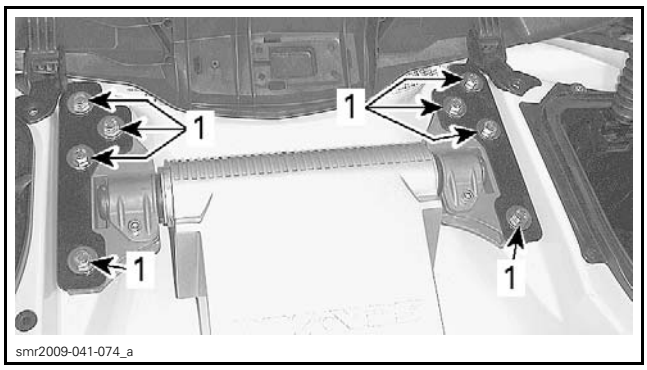

1. *Rear suspension arm screws*

5. Remove and discard socket screws securing rear brackets to arm shaft ends.

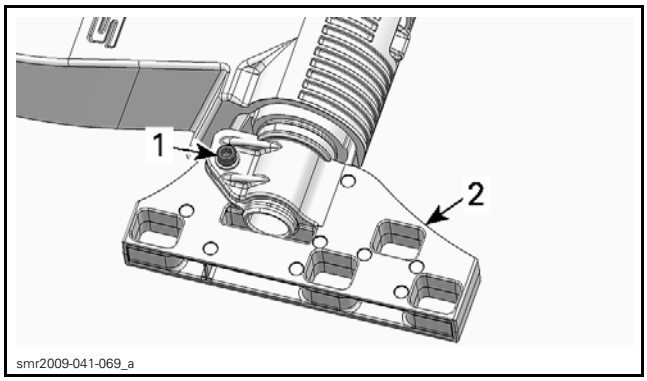

1. Socket screw
2. LH rear bracket

6. Press one rear bracket against the suspension arm bushing and remove the circlip. Repeat for the other side.

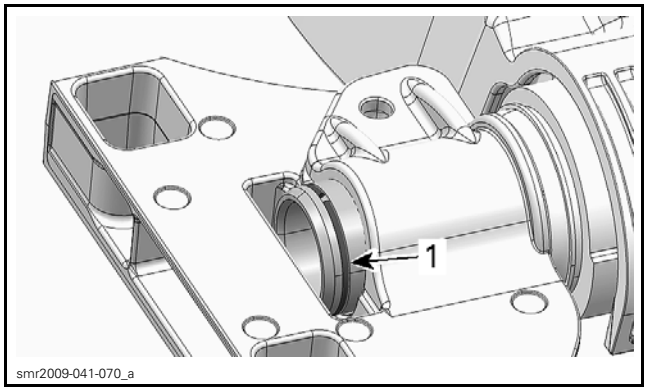

1. Circlip

Installing the Rear Suspension Arm Lower Shaft

1. When reassembly the rear bracket on shaft end, press bracket on bushing to install the circlip.
2. When both brackets are installed on shaft, pull brackets outside to position circlips against brackets.

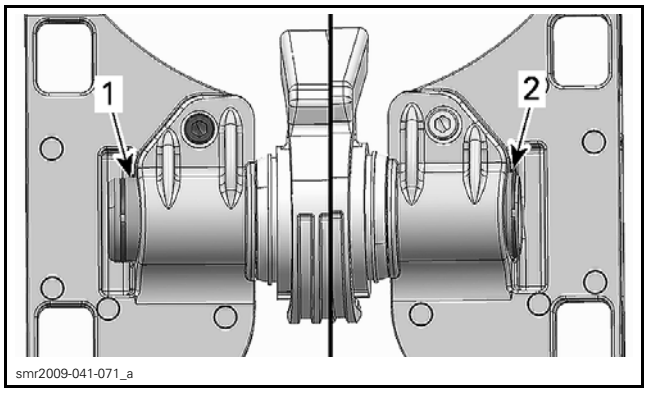

1. Incorrect installation
2. Proper installation

3. Lower the rear suspension arm on fixed deck.
4. Tighten **NEW** socket screws to specification.

TIGHTENING TORQUE	
Lower shaft screws	10 N•m (89 lbf•**in**)

5. Refer to *REAR ARM* for reinstallation.

BODY (GTX_RXT AND WAKE PRO SERIES)

SERVICE TOOLS

Description	Part Number	Page
SUPERTANIUM DRILL BIT 3/16"	529 031 800	23

SERVICE PRODUCTS

Description	Part Number	Page
CLEAR SILICONE SEALANT	296 000 309	28–29
LOCTITE 243 (BLUE)	293 800 060	19
LOCTITE 414	413 705 800	17, 34
XPS ALL PURPOSE CLEANER	219 701 709	19
XPS SYNTHETIC GREASE	293 550 010	45

BODY (MODELS WITH SUSPENSION)

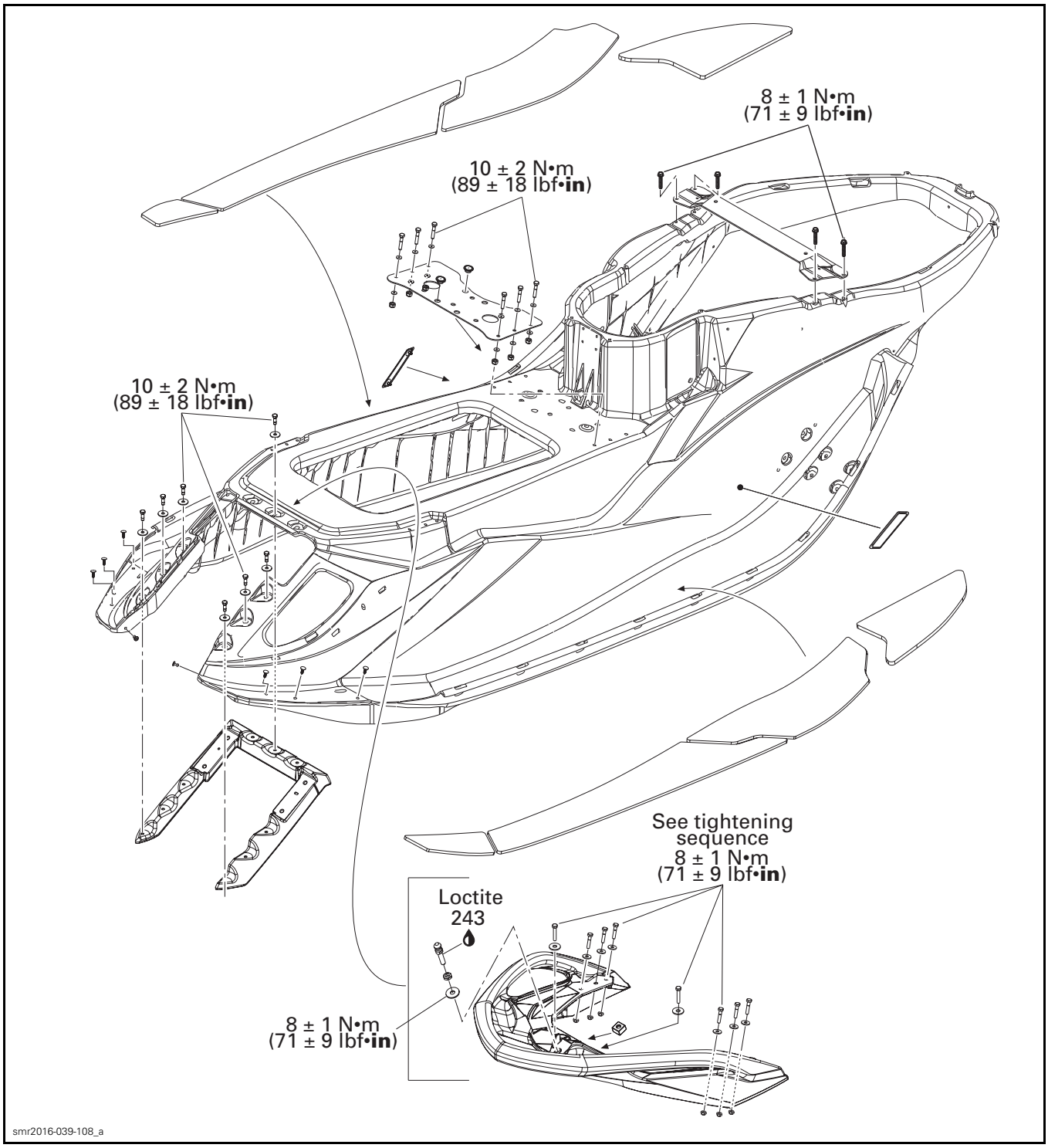

BODY (MODELS WITH SUSPENSION)

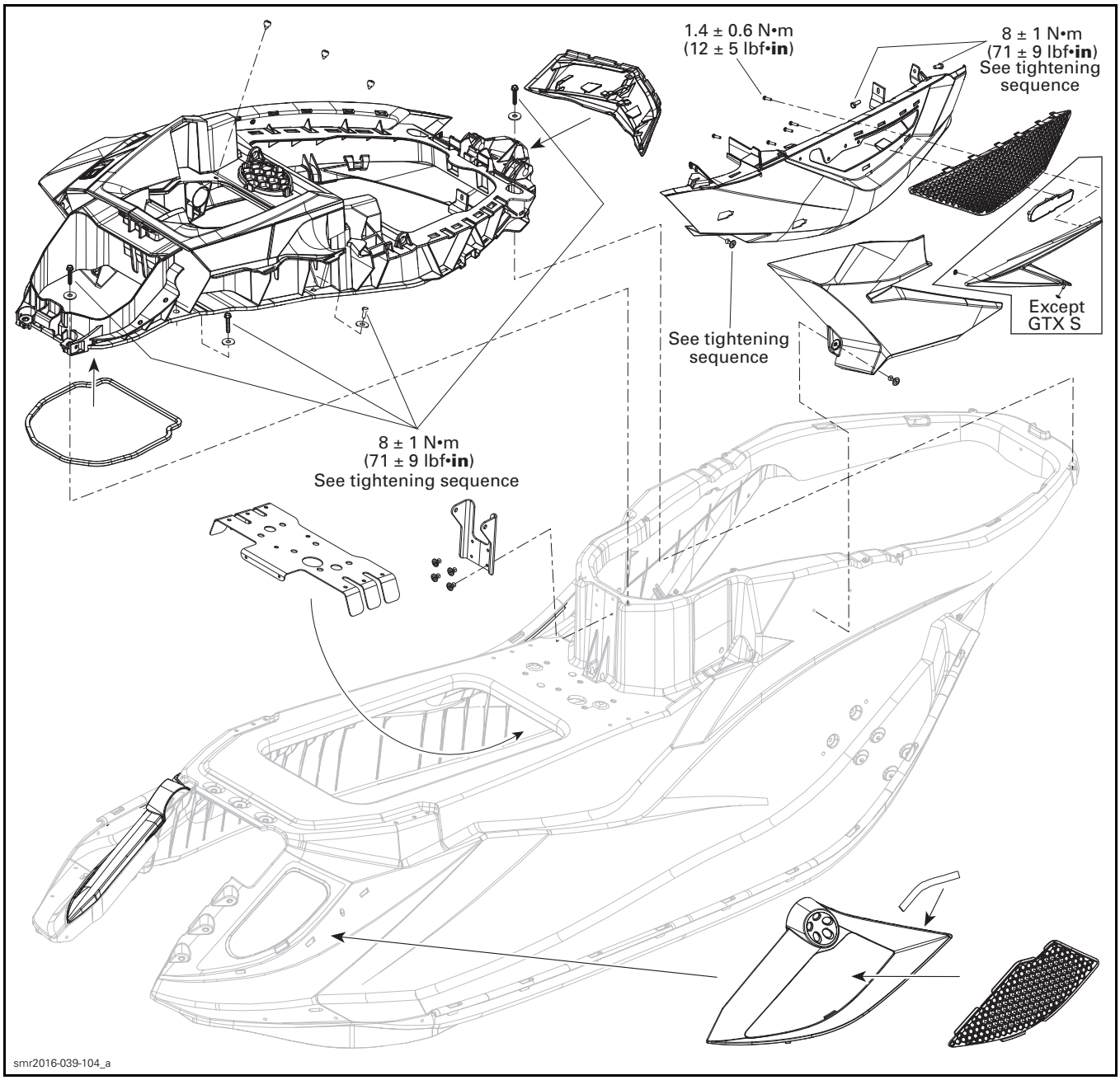

BODY (MODELS WITH SUSPENSION)

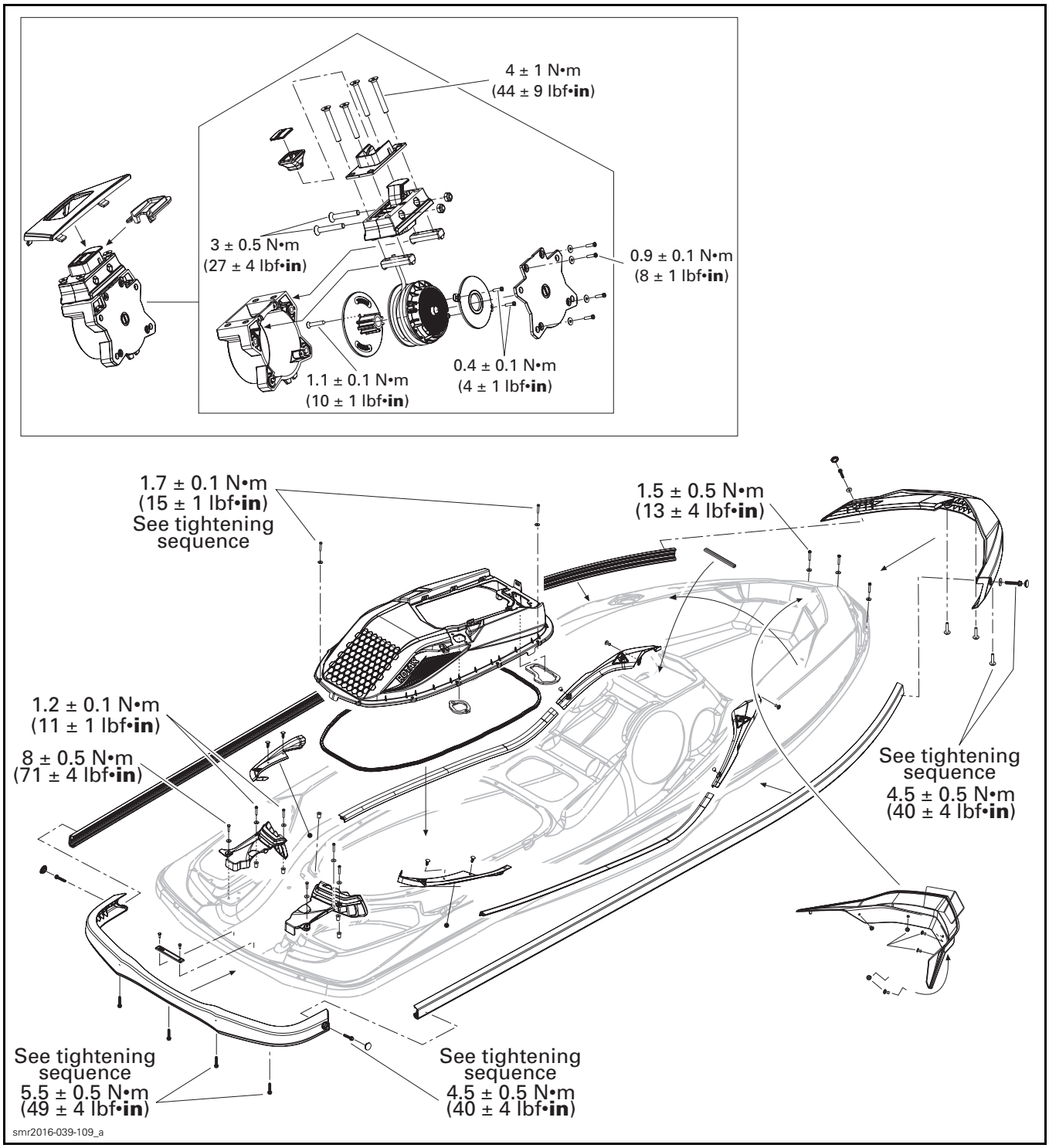

BODY (MODELS WITHOUT SUSPENSION)

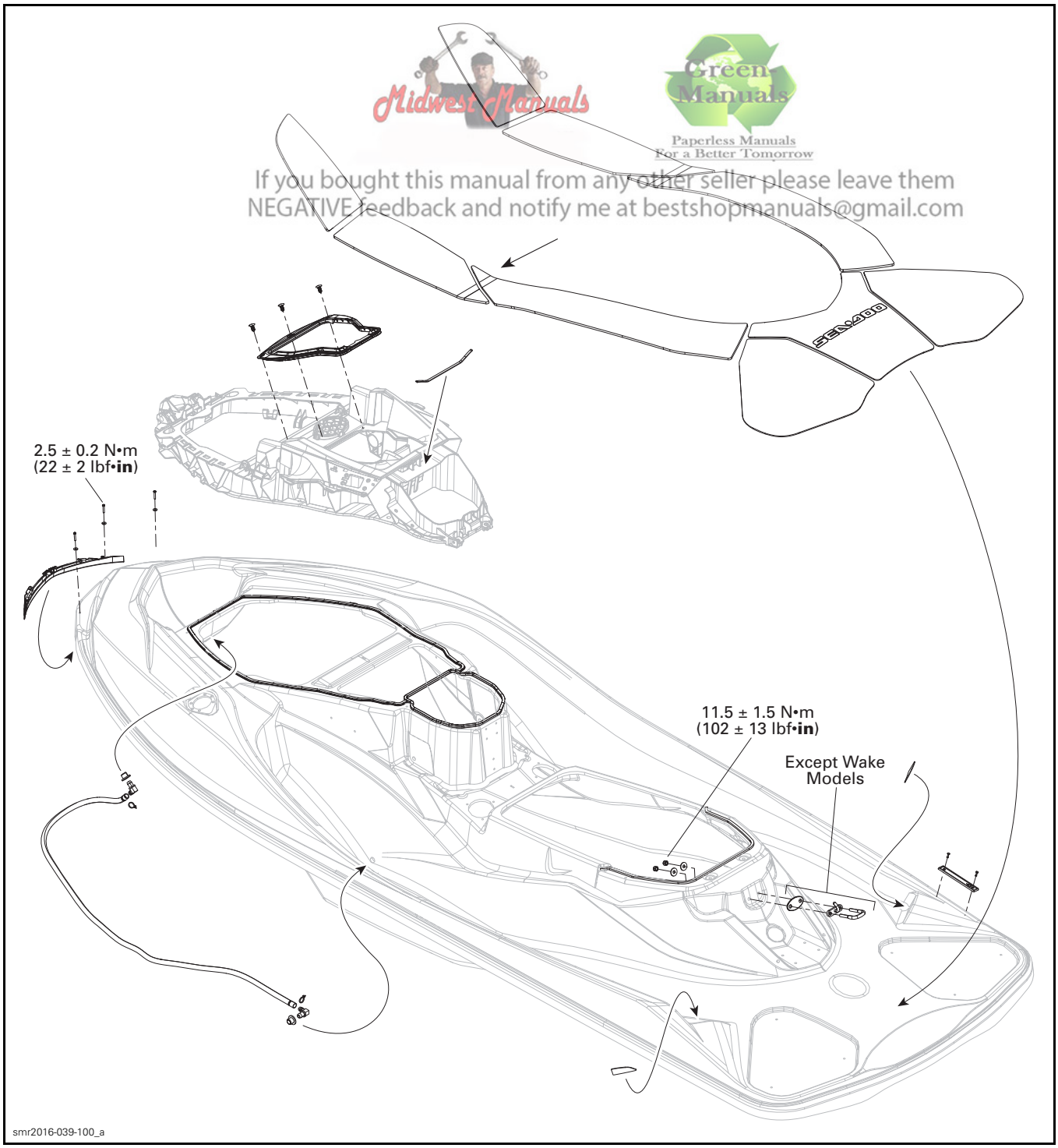

Midwest Manuals
Green Manuals
Paperless Manuals
For a Better Tomorrow
If you bought this manual from any other seller please leave them
NEGATIVE feedback and notify me at bestshopmanuals@gmail.com

BODY (MODELS WITHOUT SUSPENSION)

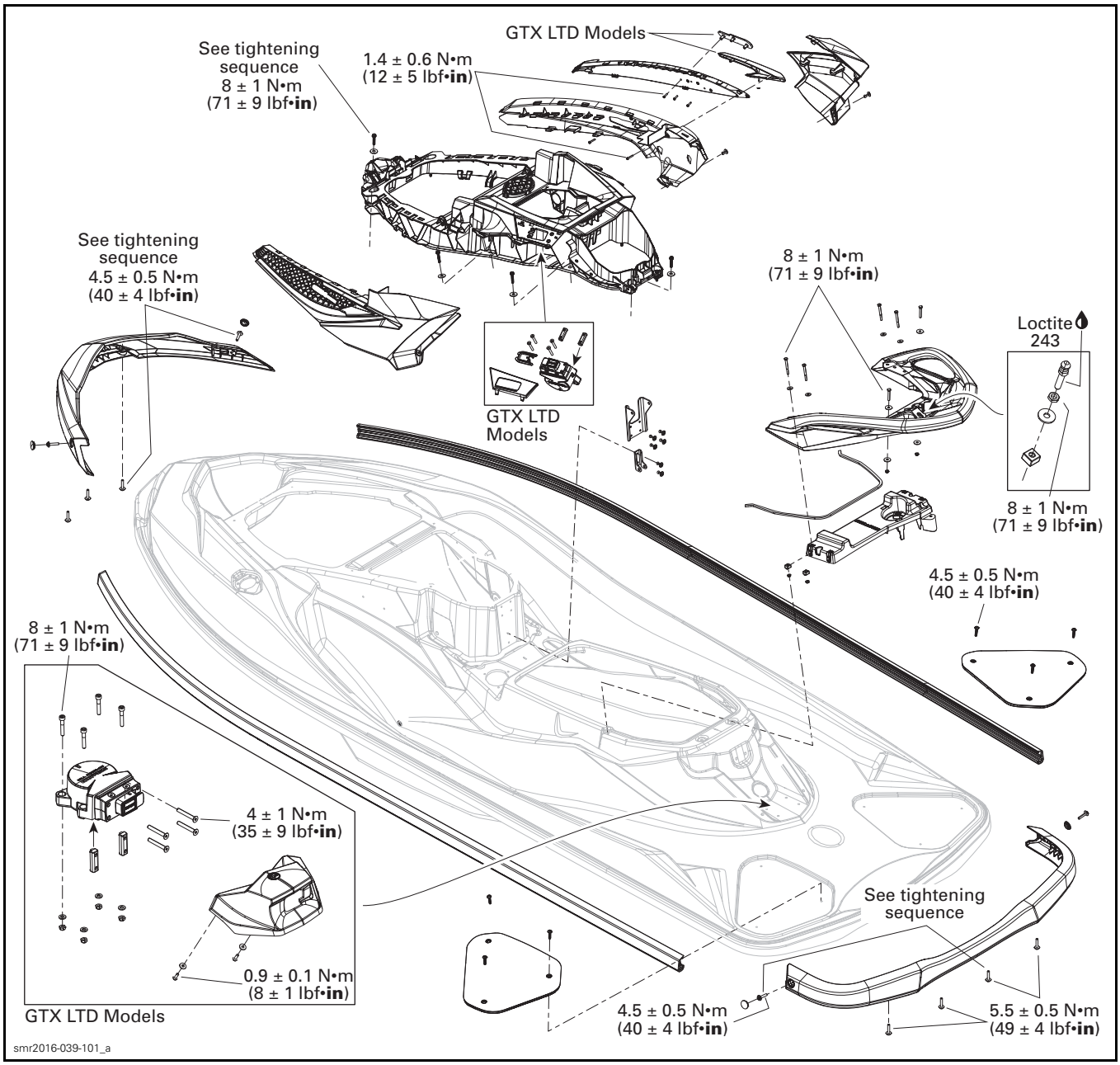

STORAGE COMPARTMENT (MODELS WITH SUSPENSION)

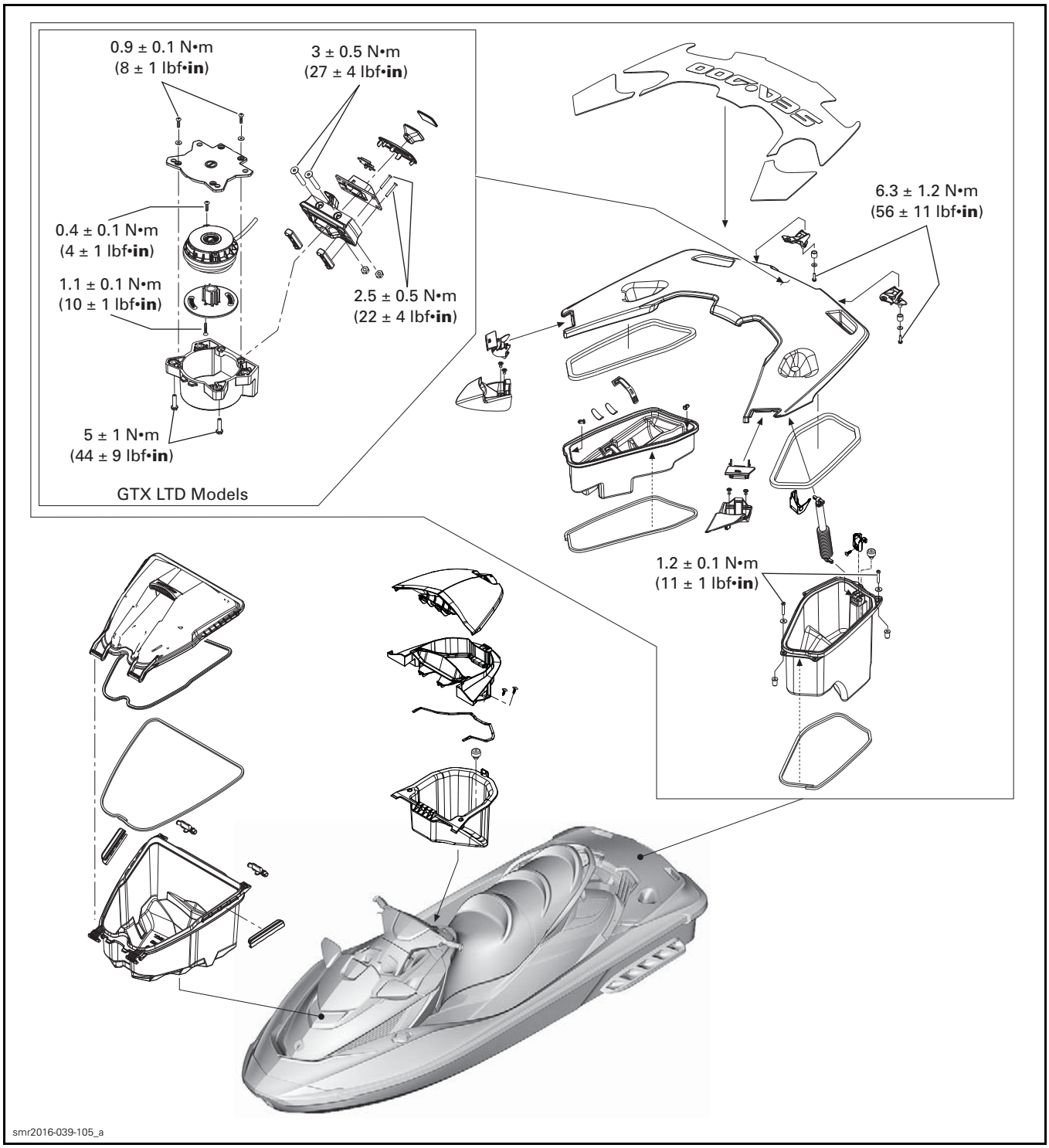

STORAGE COMPARTMENT (MODELS WITHOUT SUSPENSION)

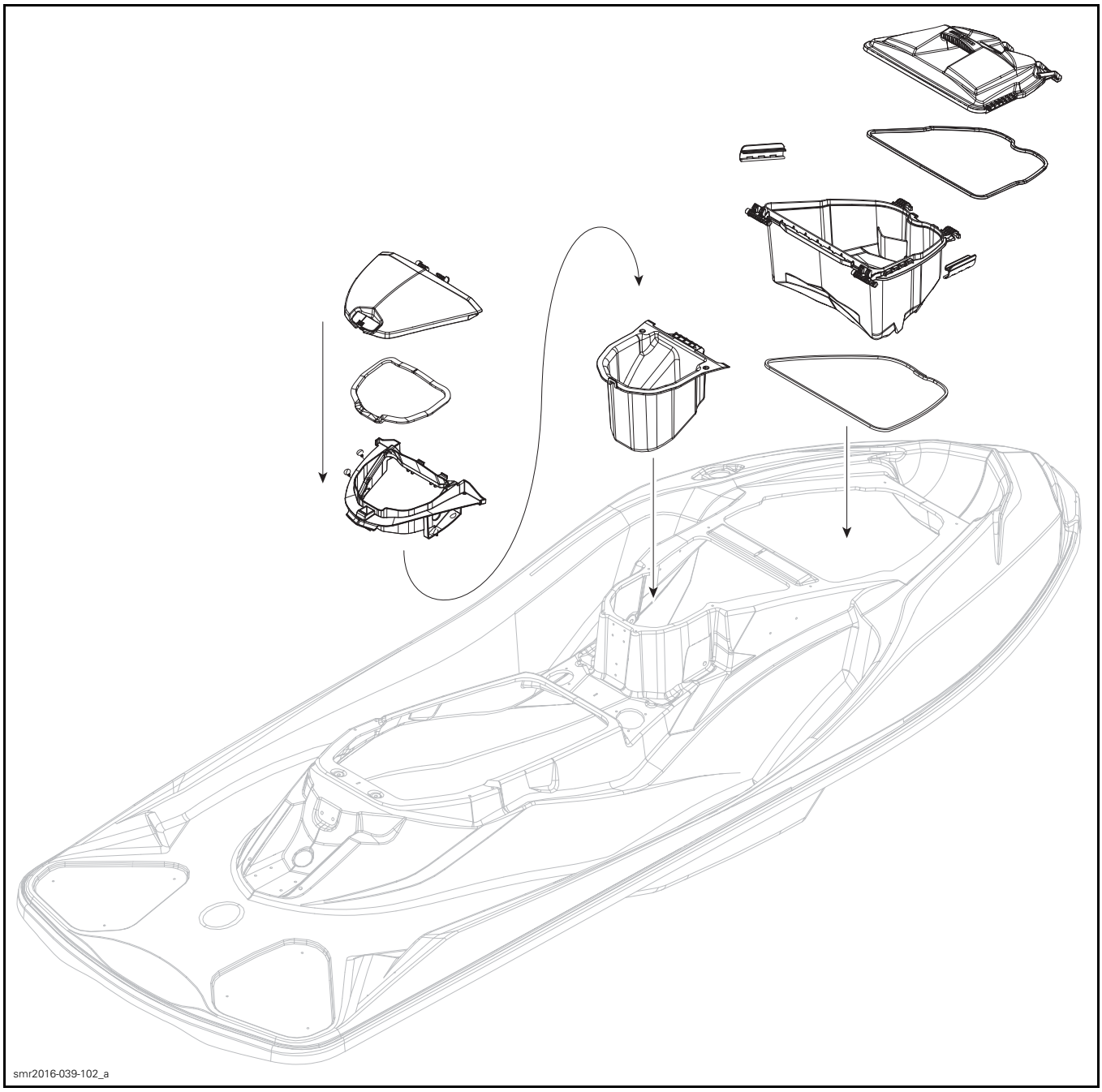

VENTILATION

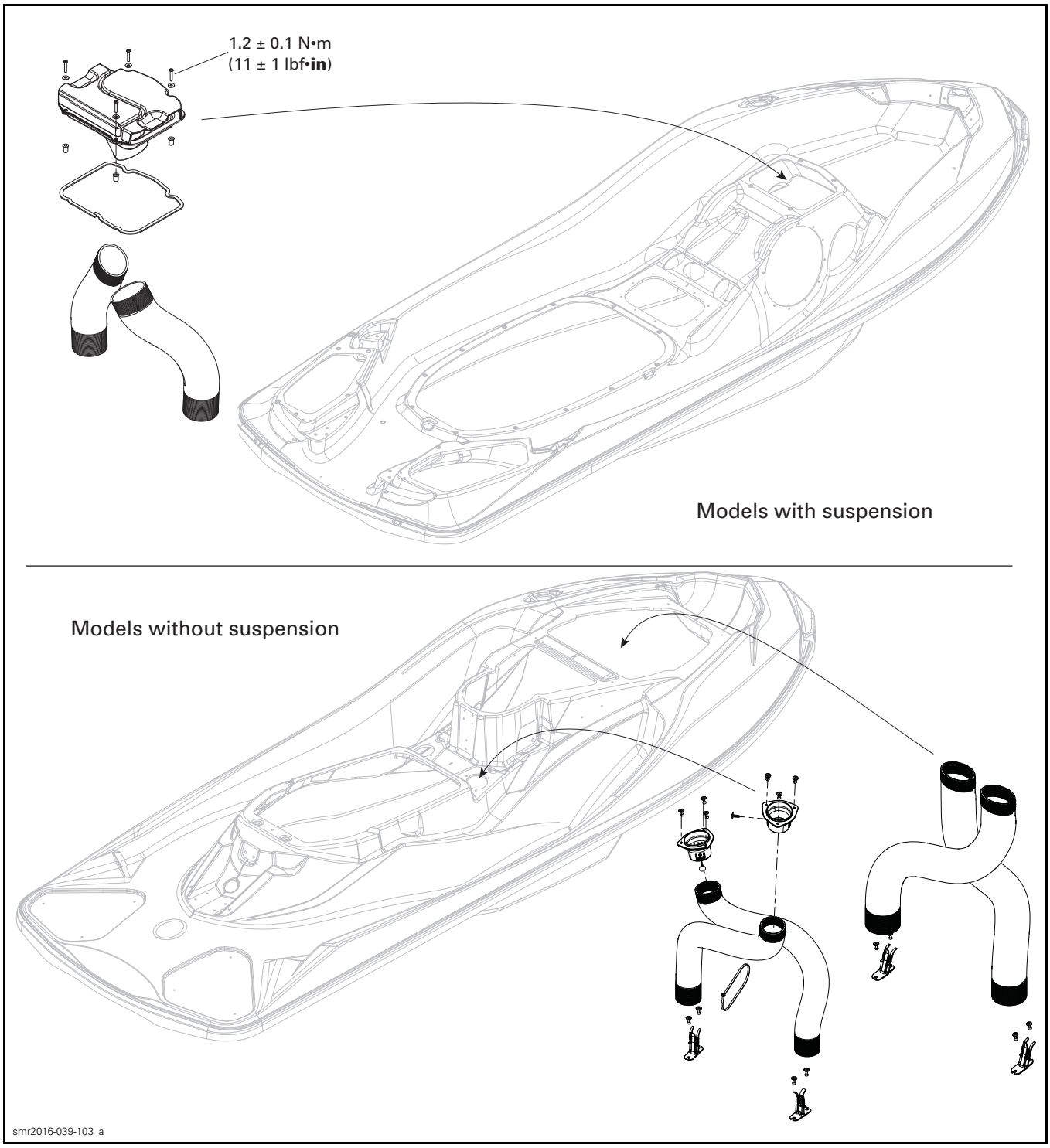

FRONT COVER

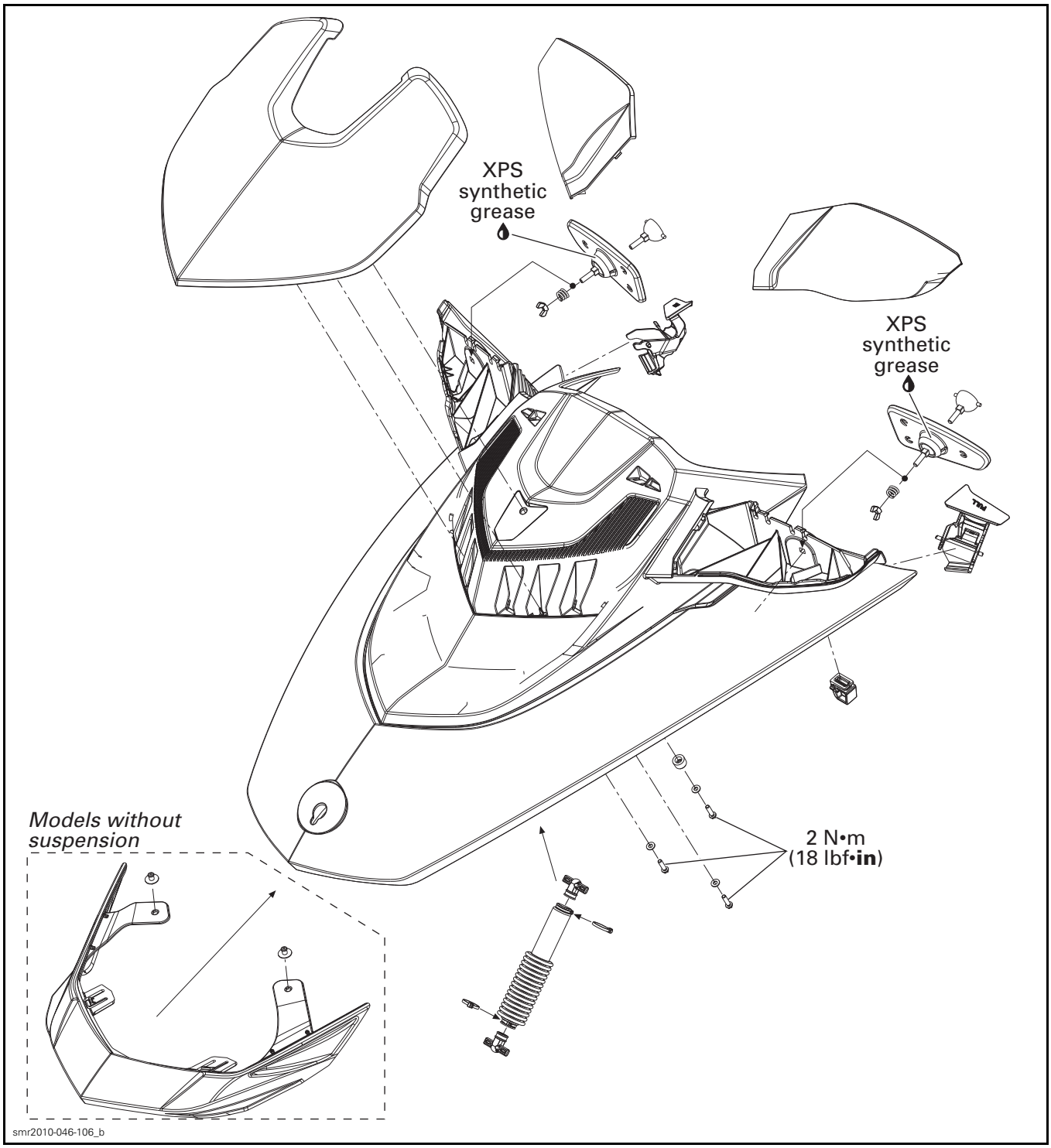
XPS
synthetic
grease
XPS
synthetic
grease
Models without
suspension
2 N•m
(18 lbf•in)
smr2010-046-106_b

SEAT

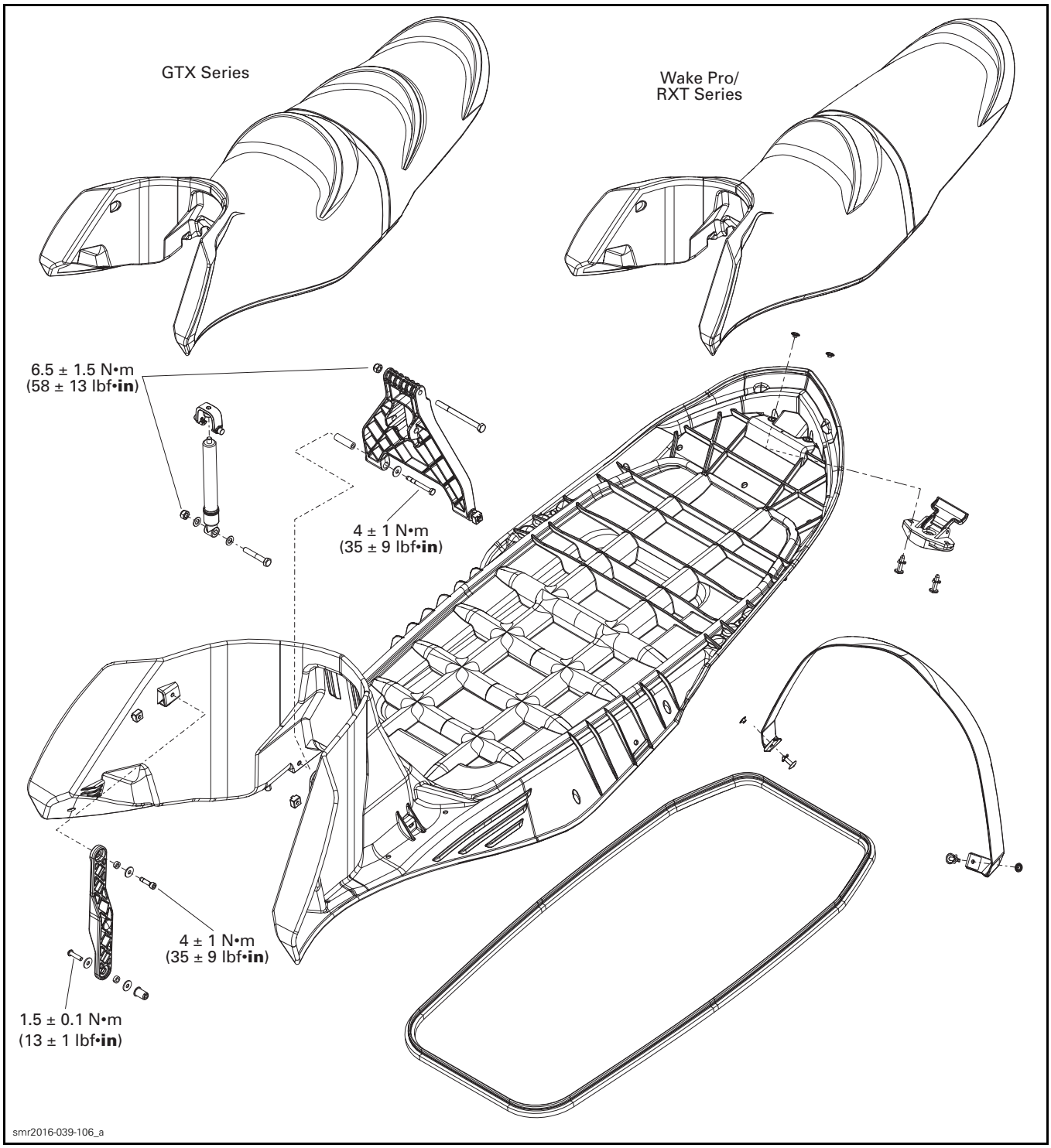
GTX Series
Wake Pro/
RXT Series
6.5 ± 1.5 N•m
(58 ± 13 lbf•in)
4 ± 1 N•m
(35 ± 9 lbf•in)
4 ± 1 N•m
(35 ± 9 lbf•in)
1.5 ± 0.1 N•m
(13 ± 1 lbf•in)
smr2016-039-106_a

WAKEBOARD RACK AND WAKE PYLON (WAKE PRO MODEL)

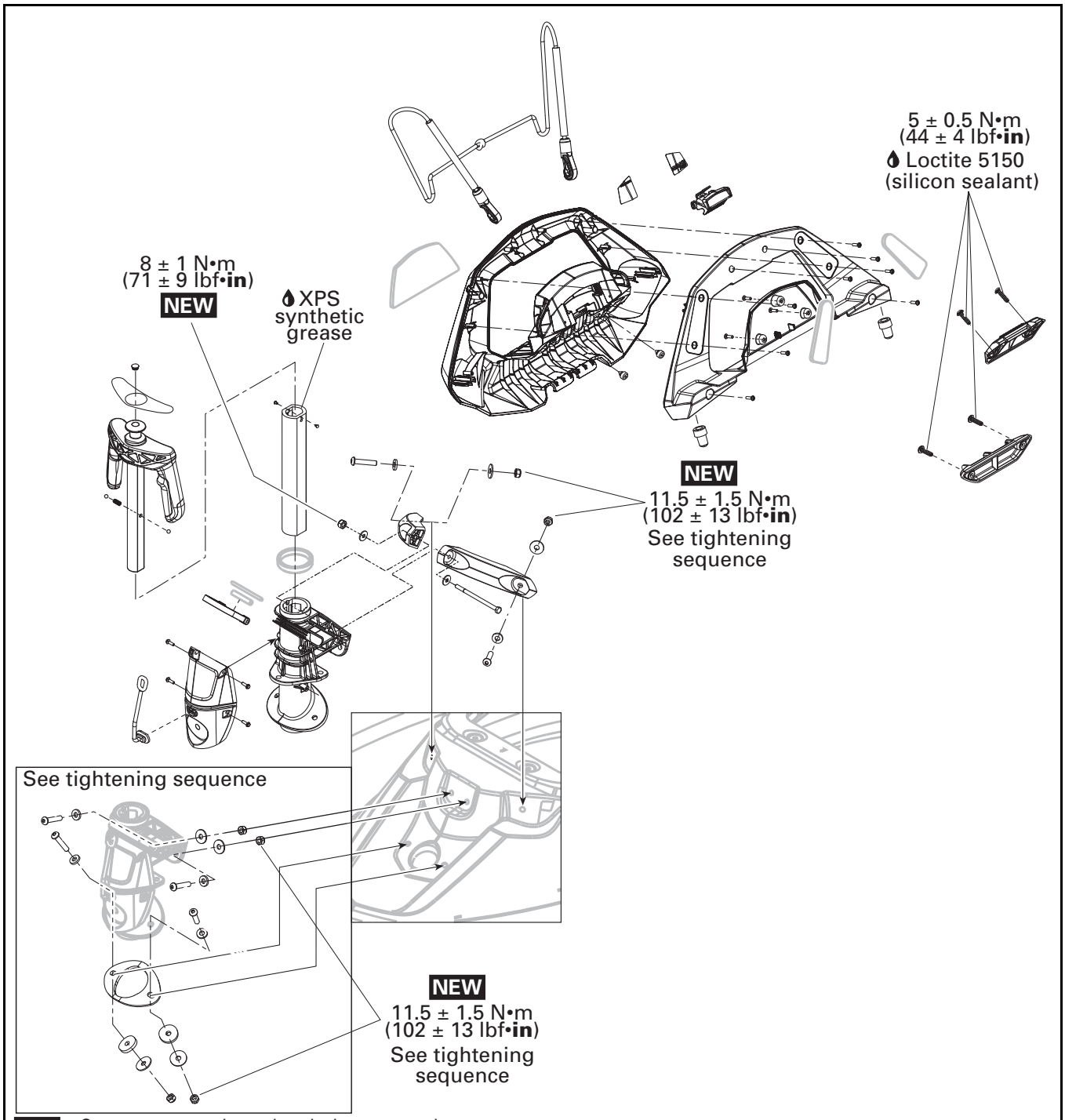

PROCEDURES

GELCOAT

The deck is constructed of chopped fiberglass, saturated with resin. It is sprayed on the layer of gelcoat along with pieces of fiberglass mat, cloth and woven roving which are added at required areas.

For the hull, a different material is used and a standard polyester based fiberglass repair kit **will not work**. Refer to *HULL* subsection for proper material and procedures.

Gelcoat Repair Information

All liquid gelcoat and repair kits can be purchased directly from Gelcote International Ltd. BRP does not distribute these products.

NOTE: Fiberglass repair kit is also available through automotive or marine suppliers.

Gelcote International Ltd web site has all the Sea-Doo personal watercraft and sport boat gelcoat colors.

You can order on the web site and get confirmation of your order within hours. Quick, reliable service is what is offered to all BRP dealers around the world.

There are many services on this web site to make your ordering quick and informative. Or you can call Gelcote International directly with any question pertaining to gelcoat. Service, value and knowledge is what you can expect when you call Gelcote International.

Gelcote International Ltd
174 Colonnade Road Suite 29
Ottawa, Ontario
Canada, K2E 7J5

Phone: (613) 225-2177
Phone: (877) 435-2683 (Toll Free)
Fax: (613) 225-5297

Web Site: www.gelcoat.ca
E-mail: info@gelcote.com

⚠ WARNING

Protect skin, wear gloves when in contact with resin, hardeners and gelcoat. A barrier skin cream may also be used. Do not expose area to open flame or lit cigarette. Some of the materials are flammable. Protect eyes, wear safety glasses when grinding, sanding or spraying. Use a dust mask when sanding or grinding. When spraying wear a respirator or paint mask. Always read warning labels on products.

TOOLS	
Air mask	Power sander
Buffing pda	Putty knife
Cover sheets	Safety glasses
Heavy-duty polisher	Sanding block
Paint brush	Scissors
Plastic container (mixing)	Spray gun
Plastic film	Stirring stick
Plastic squeegee	White cloths

MATERIALS	
Acetone	Epoxy filler
Cabosil	Masking tape
Cardboard	Liquid gelcoat
Fine compound (white)	Medium compound (white)
Fiberglass cloth	Polyester resin
Fiberglass mat	24-grit sanding disks
Gelcoat putty	Wax
Sandpaper (100-grit, 220-grit, 320-grit, 400-grit, 600-grit, 1000-grit)	

Air Bubbles Repair

Possible cause:

– Air pocket trapped between layers of laminate and gelcoat.

Preparation of Surface

Remove all of the damaged gelcoat surrounding the air bubble with a putty knife or preferably a carbide grinding tip. Make sure all loose and weak areas are completely removed. Sand a small area of the gelcoat surface with 220-grit sandpaper. If needed, sand the cavity itself. These areas must have a rough surface to allow the gelcoat putty to bond properly.

Filling the Cavity

The prepared surface must be cleaned with acetone on a cloth. Use a gelcoat repair kit. Follow the mixing instructions in the kit when preparing the gelcoat putty.

Carefully mix the required amount while making sure there are no air bubbles in the mixture. With a putty knife, fill the repair area and cover with plastic film. Curing time may depend on temperature, amount of putty and percentage of catalyst. After 2 hours, press lightly on the surface with fingers to test the hardness. When the area becomes hard, remove the plastic film.

Sanding

Begin block sanding the patch with 320-grit sandpaper until you come close to the original surface. Remove dust with a water soaked cloth and continue sanding with a 400-grit wet paper. Finish wet sanding with a 600-grit to remove deeper scratches. If needed you can wet sand with finer grit paper such as 1000-grit.

Buffing and Waxing

Buff the surface using a heavy duty polisher with a buffing pad. Make sure the pad is free of dirt or you may damage the gelcoat. Carefully begin buffing with a white medium compound. Finish off using a fine compound. While buffing, pay close attention to avoid overheating the surface.

Blisters Repair

Possible causes:

– Insert catalyst
– Improper catalyst/gelcoat ratio.

A blister is a visible bump on the watercraft surface that may not necessarily come right through the gelcoat layer. In the case of only a few blisters, follow the same repair procedure as for air bubbles. If they are numerous and in close concentration, spray liquid gelcoat to achieve proper repair. This procedure is covered in *MINOR GELCOAT FRACTURES*.

Minor Gelcoat Fractures Repair

Possible causes:

– Flexing of fiberglass laminate
– Gelcoat thickness
– Direct result of impact.

In case of fractures which have not penetrated past the gelcoat layer, the repair concerns the gelcoat only. If flex cracking or impact are evident, then additional reinforcement may be necessary. This subject will be covered in *COMPOUND FRACTURES*.

Preparing the Surface

Small Fractures: Open the cracks up with a sharp triangular can opener or preferably a carbide tipped die grinder. The V groove will provide a good bonding area for the gelcoat. With 220-grit sandpaper, sand the sides of the notched out areas.

Numerous Fractures: Using a grinder with a 24-grit disk, remove the gelcoat. Sand the area edge with 220-grit sandpaper.

Filling the Repair Area

Small Fractures: Refer to the same procedure as in the *AIR BUBBLES*.

Numerous Fractures Over Large Surface: Prepare the area for spray application of liquid gelcoat. Wipe down the surface with acetone. Mask the area off to protect the watercraft from overspray.

Mix the needed quantity of gelcoat and catalyst according to suppliers recommendations. The gelcoat can be thinned with acetone up to 10%. If it needs more consistency you can add cabosil.

Make sure that the air supply is free of oil, dirt and water.

Test spray the gelcoat mixture on paper to verify its consistency and pattern. You may have to apply 5 or 6 coats to cover the area properly. Overlap each coat further than the last, leaving at least 30 seconds between passes. Avoid trying to coat the surface with only a few heavy coats, this will not allow the gelcoat to dry properly.

Apply a coat of polyvinyl alcohol (PVA) to seal off the air and protect the gelcoat surface from dust. PVA speeds up the curing process because gelcoat will not cure properly when exposed to air.

Sanding

Wash the polyvinyl alcohol off with water. Depending on the size of the area repaired, you can either block sand as per previous procedure or you may use an air sander. Sand the surface down with progressively finer grits of sandpaper until the desired finish is achieved.

Buffing and Waxing

Buff the surface using a heavy duty polisher with a buffing pad. Make sure the pad is free of dirt or you may damage the gelcoat. Carefully begin

buffing with a white medium compound. Finish off using a fine compound. While buffing, pay close attention to avoid overheating the surface.

Compound Fractures Repair

Possible causes:

– Thickness of fiberglass laminate

– Direct result of impact.

Compound fractures are those that have gone past the gelcoated surface and in through the layers of fiberglass laminate. Two types of repairs have to be performed. The first is to restore the structural integrity of the damaged area. Fracture types can vary from a simple crack to a large hole. Usually, fiberglass reinforcement becomes necessary, especially if the fracture can be attributed to weakness. The final part of the repair is the gelcoating, which cannot be done until the interior and exterior laminate surfaces have been repaired.

Outside: Remove the damaged gelcoat and fiberglass with a 24-grit disk using a power sander. Grind outward at least 2 inches from the fracture to allow the patch to bond to strong material. Cut enough pieces of fiberglass mat necessary to build up the area. The pieces should be cut so they overlap each other by at least a half inch. For a smoother finish, the last layer should be fiberglass cloth. If the fracture is small enough all you may have to do is fill the area with an epoxy filler.

Inside: For the interior repair, you can grind more. This will allow for more fiberglass material which will strengthen the area. If the fracture opening is too large after surface preparation, you may need a backing support to cover the opening. Cut alternating pieces of fiberglass mat and cloth in overlapping sizes.

Patching the Repair Area

Outside: The outside should be done first. Wipe clean the area with acetone on a cloth, then mask off area. For a small crack use an epoxy filler in the same way you would use gelcoat repair putty. When laying up a larger area you will use mat, cloth and fiberglass resin and catalyst. Use a clean container to mix the resin, mix only what you will need. Follow the recommended catalyst ratio.

Using a clean paintbrush, brush the mixed resin on the surface. Place the smallest piece of mat over the fracture and then wet out the mat. Follow with the remaining pieces of mat and final layer of cloth. While wetting the pieces make sure you work the air bubbles out and saturate all the pieces evenly. Try to work quickly, you may only have 15 or 20 minutes. You may clean the brush with acetone.

Wait until the repair has hardened before moving on to the interior repair. If the size of the opening is too large for the pieces to maintain the proper shape, you will have to use a backing support. It is a shaped piece of cardboard that fits flush to the interior surface and has a plastic layer on the repair side. It is held in place by tape or a support.

Inside: Wipe down the area with acetone on a cloth. Apply the same procedure as for outside repair when laminating the alternating pieces of fiberglass material. If a backing support was used, remove it before starting the repair. After the area has hardened, remove sharp edges of material from surface. If required paint the surface.

Sanding

Outside: This surface will have to be prepared for application of gelcoat. The size of the area will determine the gelcoating procedure to be used. Refer to the *MINOR GELCOAT FRACTURES REPAIR*.

Buffing and Waxing

Refer to the *BUFFING AND WAXING* in *MINOR GELCOAT FRACTURES REPAIR*.

DECALS

Removing Decal

Using a heat gun warm up one end of decal for a few seconds until decal can roll off when rubbing with your finger.

NOTE: When heating near light surfaces, duct tape should be applied to protect the surface. Otherwise the light color could become a yellowish color.

Pull decal slowly and when necessary apply more heat to ease removal on the area that has to be peeled off.

If decal tears while pulling off, it has to be heated for a few seconds longer. If decal tends to stretch while pulling off, stop heating and wait a few seconds to let it cool, then peel it off.

Installing Decal (with a Protective Film on Back Side)

These decals usually contain written information (e.g.: warning) and are used on gelcoat or metal.

Using isopropyl alcohol, clean the surface and dry thoroughly.

Using a pencil and the decal as a template, mark the area where decal will be located.

Remove half of the decal back protective film and align decal with marks. Start sticking it from center and remove the other half of the film to stick it completely. Carefully squeegee decal beginning at center and working outward using, firm, short, overlapping strokes.

Installing Decal (with a Protective Film on Both Sides)

These decals usually contain graphics and are used on gelcoat or plastic.

Installation on Gelcoat

Using isopropyl alcohol, clean the surface and dry thoroughly.

Using a pencil and the decal as a template mark the area where decal will be located.

For better adhesion a dry application is recommended, however, to ease decal installation a mild solution of soapy water can be sprayed over surface where decal will be installed.

Remove back protective film from decal and align decal with marks. When well aligned squeegee decal beginning at center and working outward using firm, short, overlapping strokes.

Remove front protective film once decal has adhered to hull.

Installation on Plastic Surface (Storage Cover)

Clean surface with isopropyl alcohol and dry thoroughly.

Using a pencil and the decal as a template, mark the area where decal will be located.

NOTICE **Do not use soapy water to locate decal on plastic parts.**

Remove back protective film from decal and carefully align decal with marks. When well aligned squeegee decal beginning at center and working outward using firm, short, overlapping strokes.

Remove front protective film once decal has adhered.

CARPETS

Cleaning Carpet

To clean the carpets, use 3M™ Citrus Base Cleaner or the equivalent. See the manufacturer's instructions.

Removing the Carpet

Unstick a carpet corner.

Pull carpet vigorously to remove the carpet and its glue from body.

To remove the remaining glue from body, use a plastic or rubber spatula. Scrape remaining glue with spatula.

NOTE: Do not use any products (alcohol, acetone, thinner, etc.) or heat the remaining carpet glue. Chemical reactions make glue very hard to remove.

Installing Carpet

Clean body surface with isopropyl alcohol and dry thoroughly.

Install new carpet.

STORAGE COMPARTMENT COVER

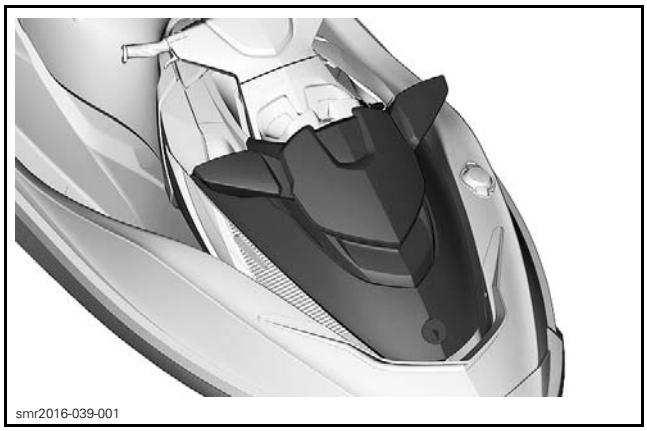
smr2016-039-001

Removing the Storage Compartment Cover

1. Open cover.
2. Cut locking tie retaining the bellows of gas shock.

smr2009-042-028_a

1. Cut this locking tie

3. Move bellows downward.
4. Unscrew gas shock from its upper attachment.
5. Remove gas shock from vehicle.
6. Open cover completely.
7. Align cover hinge keys with front body module slots.
8. Pull up cover to remove it.

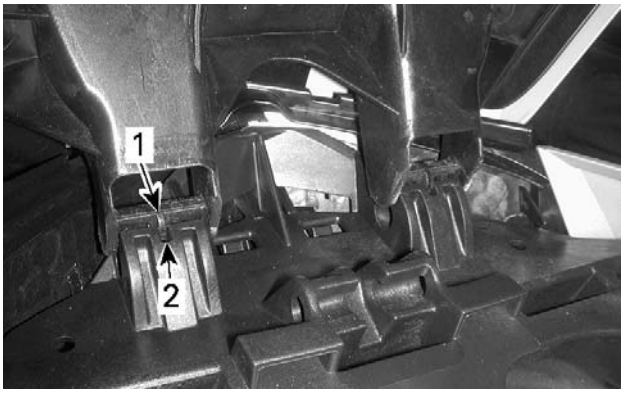

smr2009-042-029_a

1. *Cover hinge key*
2. *Front body module slot*

Installing Storage Compartment Cover

The installation is the reverse of the removal procedure. However, pay attention to the following.

Remove gas shock attachment from cover.

Apply LOCTITE 414 (P/N 413 705 800) on threads of shock absorber body.

Tighten manually the attachment on gas shock.

Install the bellows and secure it using a locking tie.

Install the gas shock on cover.

NOTE: The corrugated section of bellows must point downward.

smr2009-042-030_a

1. *Corrugated section*

Install cover on vehicle.

NOTICE **Make sure to insert cover hinges completely. A click must be heard to indicate complete insertion.**

Position the gas shock lower attachment on cavity opening.

NOTICE **To avoid breaking the attachment, do not force to insert it in cavity.**

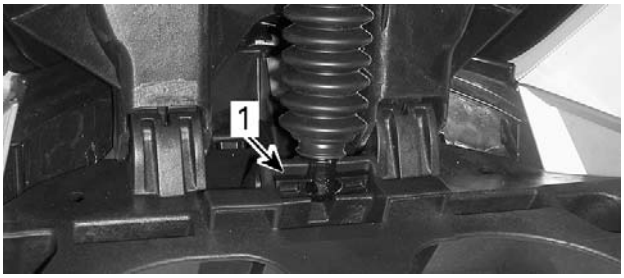

smr2009-042-031_a

1. *Lower attachment in its cavity*

Close cover to lock the bottom of the gas shock.

GLOVE BOX COVER

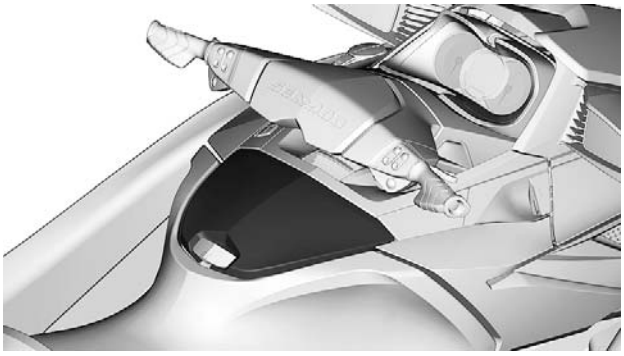
smr2016-039-002

Removing the Glove Box Cover

1. Move steering in its upper position.
2. Open glove box cover until cover hinges are aligned with front body module openings.

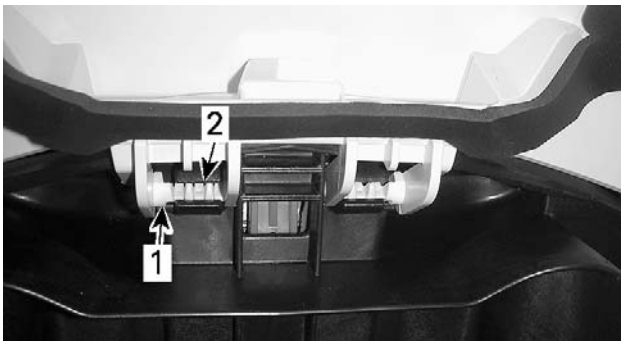

smr2009-042-025_a

1. *Glove box cover hinge*
2. *Front body module opening*

3. Pull the bottom of cover gently to release hinges.

Installing the Glove Box Cover

Reverse the removal procedure.

SEAT

Removing the Seat

1. Open seat.
2. Attach the seat to support it during removal.
3. Remove Allen socket screw retaining the lateral arm to moving deck (one each side).

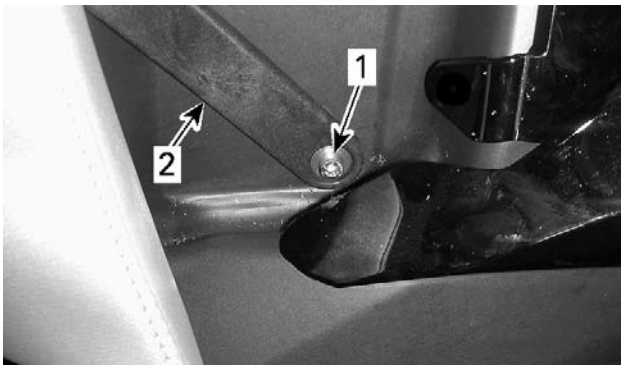

smr2009-042-026_a

1. *Allen socket screw*
2. *RH lateral arm*

4. Remove bolts securing the central arm to seat.

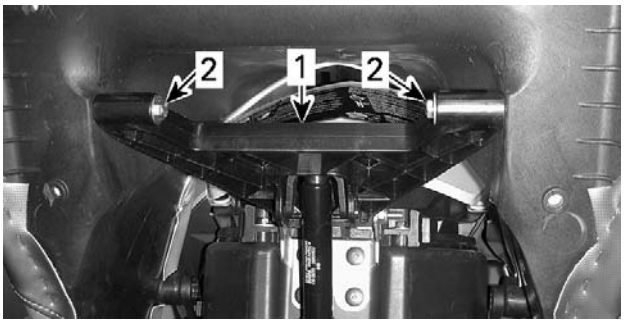

smr2009-042-027_a

1. *Central arm*
2. *Retaining bolts*

5. Remove seat from vehicle.

Installing the Seat

The installation is the reverse of the removal procedure. However, pay attention to the following.

Install seat to central arm.

Tighten seat retaining bolts to specification.

TIGHTENING TORQUE	
Seat retaining bolt	4 N•m ± 1 N•m (35 lbf•**in** ± 9 lbf•**in**)

Secure lateral arms to moving deck. Install parts as shown.

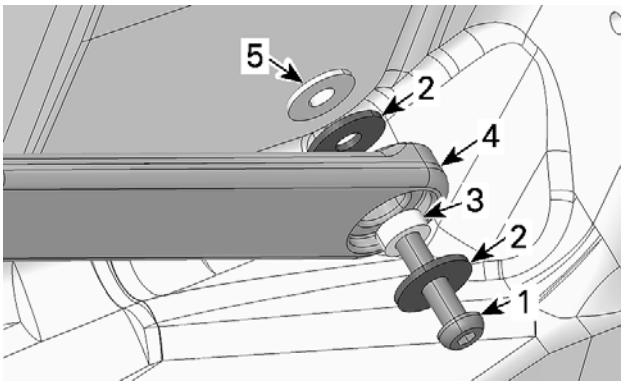

smr2009-042-032_a

1. *Allen socket screw*
2. *Stainless steel flat washers*
3. *Sleeve*
4. *RH lateral arm*
5. *Rubber grommet in moving deck*

Tighten lateral arm screws to specification.

TIGHTENING TORQUE	
Lateral arm screw	1.5 N•m ± 0.1 N•m (13 lbf•**in** ± 1 lbf•**in**)

NOTICE Do not tighten screws over this recommended torque. Otherwise, the rubber grommet could turns and screw will be hard to remove.

Cleaning the Seat

For general purpose cleaning, use XPS ALL PURPOSE CLEANER (P/N 219 701 709), Vinyl Finish Vinyl Cleaner, Fantastik or warm water with a mild dish soap such as Dawn or Ivory. Gently scrub with a small soft bristle brush.

For dirt build-up, use XPS ALL PURPOSE CLEANER (P/N 219 701 709), Vinyl Finish Vinyl Cleaner or an equivalent. Let soak for approximately 10 minutes, then gently scrub with a soft bristle brush. For specific stain removal, refer to your cleaning and care card.

Do not use any silicone-based protectants. They will extract the plasticizers, leaving the vinyl hard and brittle, and eventually cracking will occur.

RECOMMENDED PRODUCTS
1. XPS ALL PURPOSE CLEANER (P/N 219 701 709)
2. Dish Soap (Dawn or Ivory)
3. Fantastik
4. 3M Citrus Cleaner
5. 303 Protectant

Vinyl Cleaning Recommendations for Special Stains

TYPE OF STAIN	STEP 1	STEP 2	STEP 3	ACTION
Ballpoint ink*	E	B	A	A. Medium-soft brush, warm soapy water, rinse/dry.
Chewing gum	D	A	—	
Coffee, tea, chocolate	B	—	—	
Pen	D	B	—	B. Vinyl Finish Cleaner, rinse/dry.
Grease	D	B	—	
Household soil	A	B	—	
Ketchup	A	B	—	C. One (1) tablespoon of ammonia, one-fourth (1/4) cup of hydrogen peroxide, three-fourth (3/4) cup of water, rinse/dry.
Latex paint	A	B	—	
Lipstick	A	B	—	
Mildew or wet leaves*	C	B	A	
Motor oil	B	—	—	
Oil-based paint	D	B	—	D. Wipe or scrape off excess (chill gum with ice before hand).
Permanent marker*	E	B	C	
Spray paint	B	B	—	
Suntan lotion	A	B	—	E. Denatured alcohol, rinse/dry.
Tar/asphalt	D	B	—	
Yellow mustard	A	B	C	
*Suntan lotion, tree pollen, wet leaves and some other products can contain dyes that stain permanently.				

All cleaning methods must be followed by a thorough rinse with warm water.

Certain household cleaners, powdered abrasives, steel wool and industrial cleaners can cause damage and discoloration and are not recommended. Dry cleaning fluids and lacquer solvents should not be used as they will remove printed pattern and gloss. Waxes should be used with caution as many contain dyes or solvents that can permanently damage the protective coating.

SEAT LATCH

Adjusting the Seat Latch

NOTE: Apply Threadlocker on threads of lock pin when the adjustment is required or when the lock pin is removed. If a new lock pin is used, it is already coat with a threadlocker.

1. Loosen adjustment nut.
2. Adjust lock pin height. Do not torque yet.
3. Position the lock pin longitudinally into the rear handle slot.
4. Hold the lock pin in this position and tighten adjustment nut to specification.

TIGHTENING TORQUE	
Seat latch adjustment nut	8 N•m ± 1 N•m (71 lbf•**in** ± 9 lbf•**in**) + LOCTITE 243 (BLUE) (P/N 293 800 060)

5. Close the seat and readjust as required.

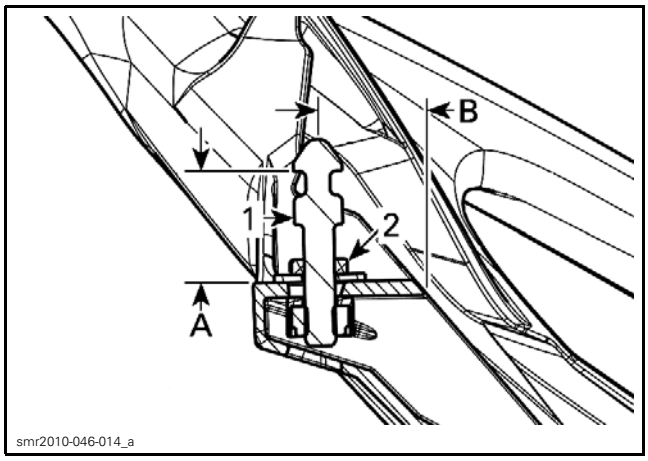

1. *Lock pin*
2. *Adjustment nut*

MODEL	MEASURE A	MEASURE B
Models with suspension	32.4 mm ± 1.0 mm (1.276 in ± .039 in)	34.4 mm ± 1.0 mm (1.354 in ± .039 in)
Models without suspension	36.4 mm ± 1.0 mm (1.433 in ± .039 in)	

MIRRORS

Replacing the Mirror

1. Remove mirror trim as follows.
   1.1 Using a small screwdriver, unlock both front tabs securing the front of mirror trim.
   1.2 Tilt the trim forward and remove it.

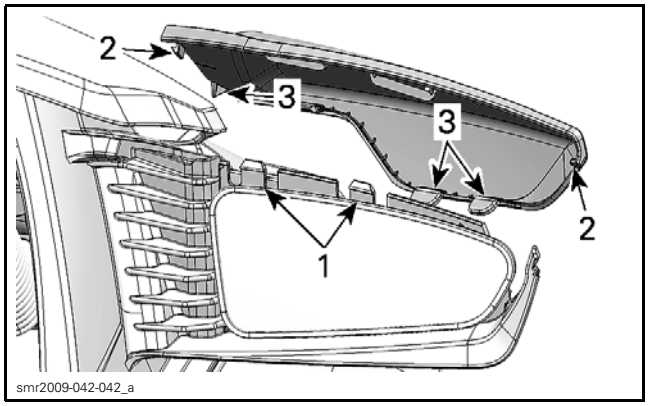

1. *Front retaining tabs*
2. *Side retaining tabs*
3. *Locating tabs*

2. Remove nut and spring securing mirror.

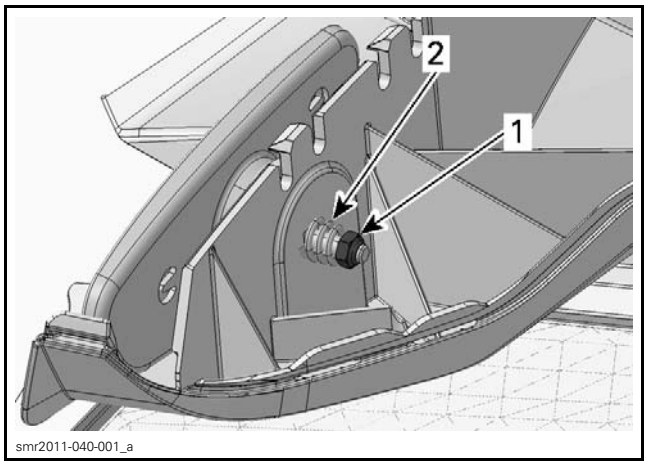

1. *Nut*
2. *Spring*

3. Install the new mirror and tighten nut to specification.

MIRROR SPRING LENGTH SPECIFICATION
10 mm to 12 mm (13/32 in to 15/32 in)

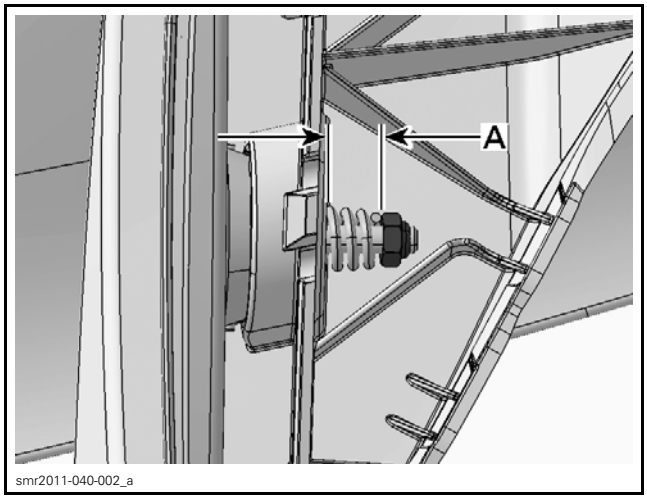

A. *10 mm to 12 mm (13/32 in to 15/32 in)*

4. Install mirror trim as follows.
   4.1 Install the front locating tabs.

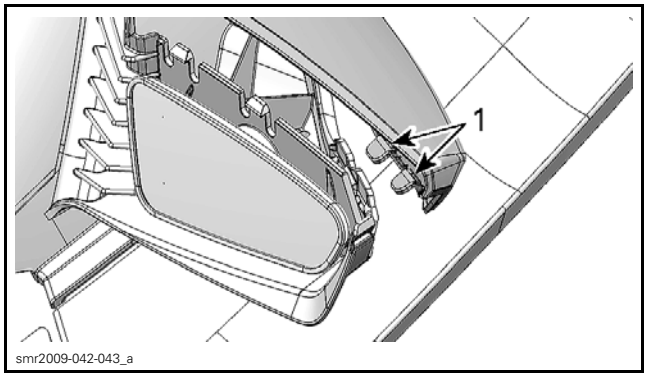

1. *Front locating tabs*

   4.2 Lower rear part of trim.

4.3 Lift up the rear edge and press the center of trim to position retainers over front retaining tabs.

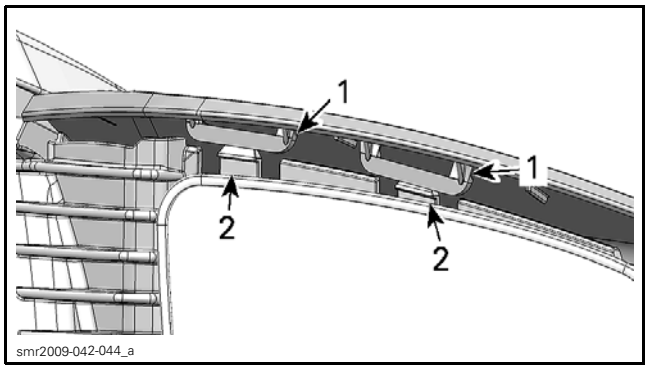

1. Trim retainers
2. Retaining tabs

BUMPERS

Removing the Bumper

Front Bumper

1. Remove both protective caps.

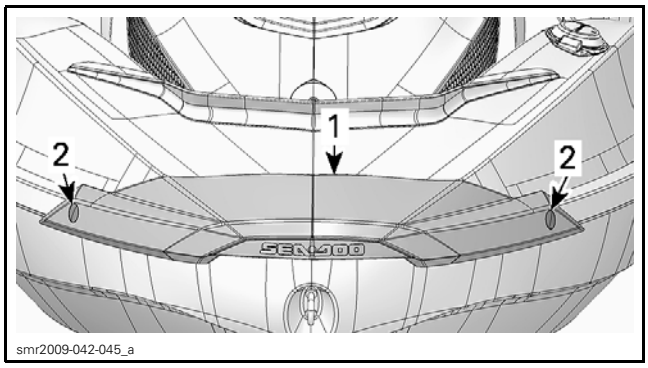

TYPICAL – iS MODEL SHOWN
1. Front bumper
2. Protective caps

2. Remove side screws securing front bumper to body.

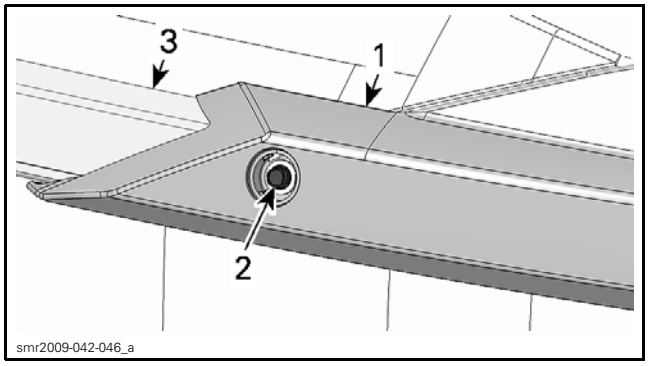

FROM RH SIDE OF VEHICLE
1. Front bumper
2. Retaining screw
3. Side bumper

3. Remove screws located under front bumper.

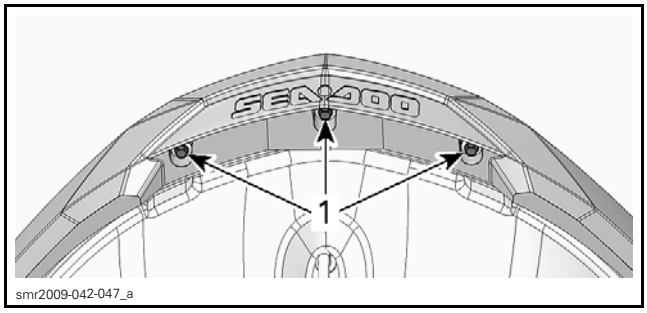

UNDERNEATH FRONT OF VEHICLE
1. Retaining screws

4. Remove front bumper from vehicle.

Rear Bumper

1. Remove both protective caps (one on each side).

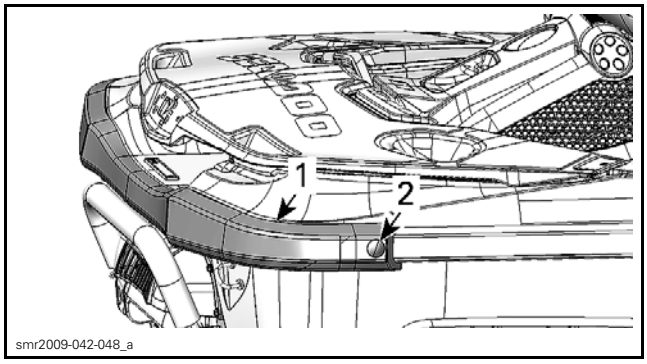

TYPICAL – iS MODEL SHOWN
1. Rear bumper
2. Protective cap

2. Remove side screws securing rear bumper to body.

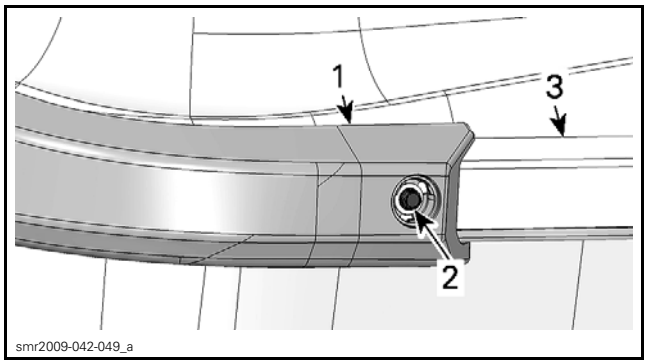

FROM RH SIDE OF VEHICLE
1. Rear bumper
2. Retaining screw
3. Side bumper

3. Remove screws located under rear bumper.

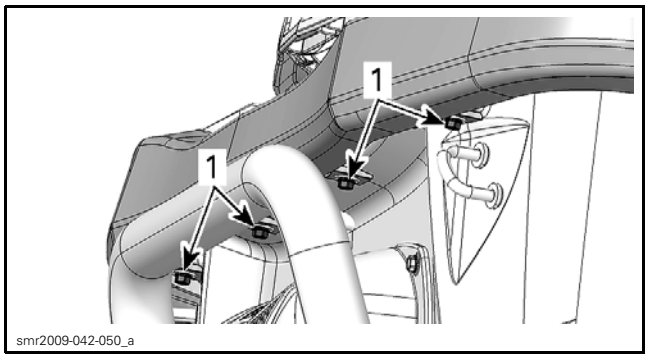

1. Retaining screws

4. Remove rear bumper from vehicle.

Side Bumpers

1. Remove front and rear bumpers.
2. Using a marker, trace a line at bumper end.

NOTE: These marks will be used during installation.

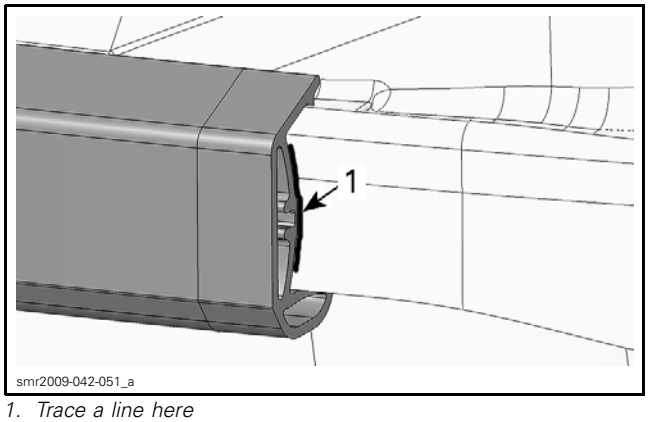

1. Trace a line here

3. Pull the top of bumper to unclip it from body.

NOTE: A heat gun can be used to soften side bumper.

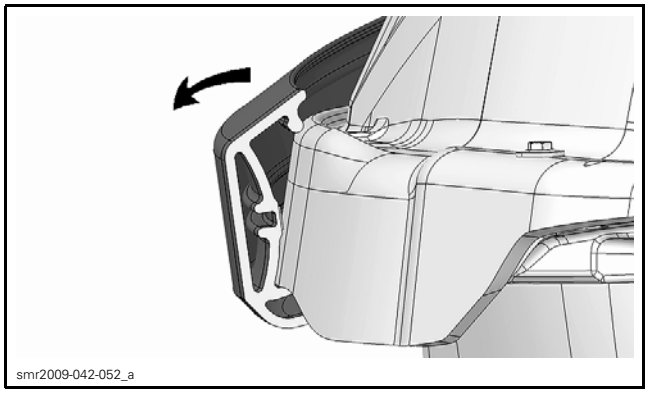

Installing the Bumper

Front and Rear Bumper

The installation is the reverse of the removal procedure.

Tighten bumper screws as per following tightening sequence. Refer to exploded view for applicable tightening torque.

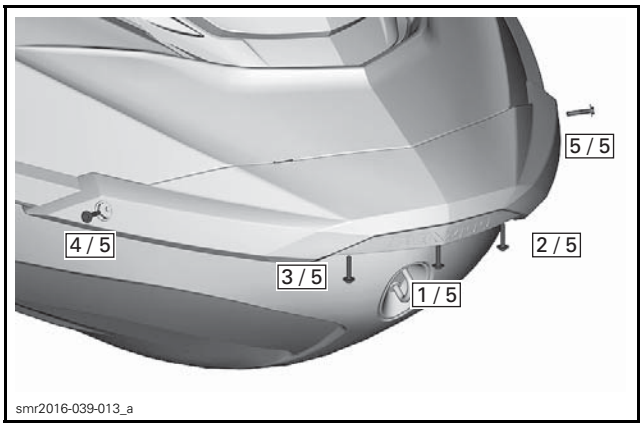

FRONT BUMPER

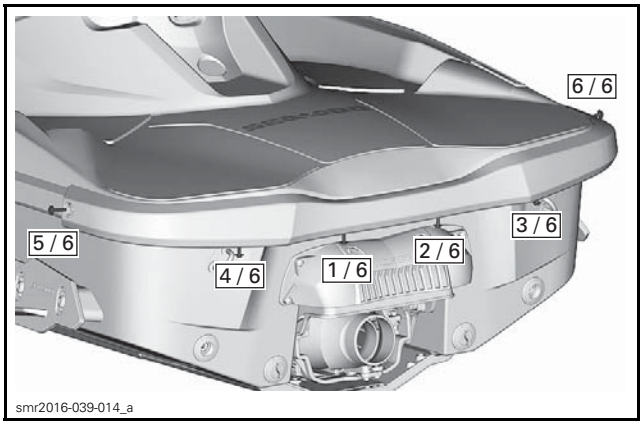

REAR BUMPER

Side Bumpers

1. Remove all remaining residues of the mounting tape.
2. Clean bumper area using isopropyl alcohol.
3. Remove the protective skin on mounting tape.

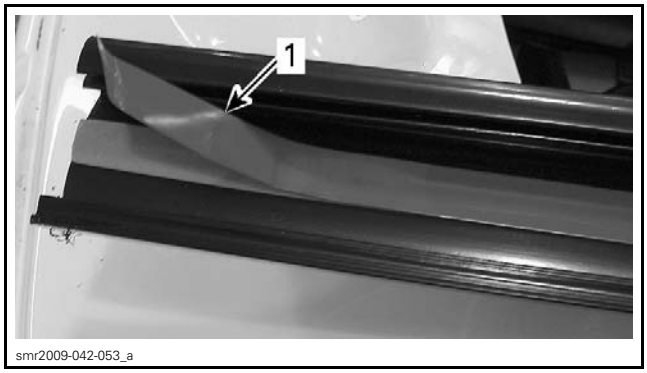

1. Protective skin

4. Insert bumper over body lip.
   4.1 Insert lower section first.

4.2 Insert upper section last.

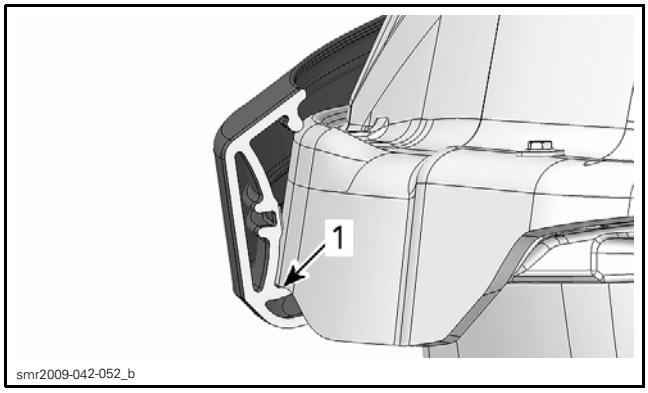

1. Make sure bumper is positioned correctly

NOTE: A heat gun can be used to soften side bumper.

LATERAL COVER

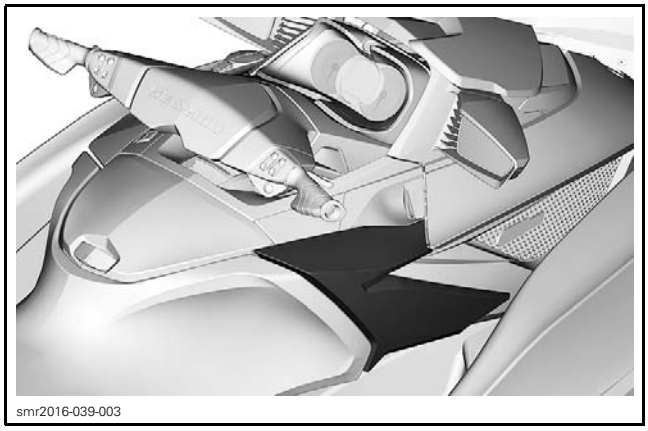

Removing the Lateral Cover

Open seat.

REQUIRED TOOL
SUPERTANIUM DRILL BIT 3/16" (P/N 529 031 800)

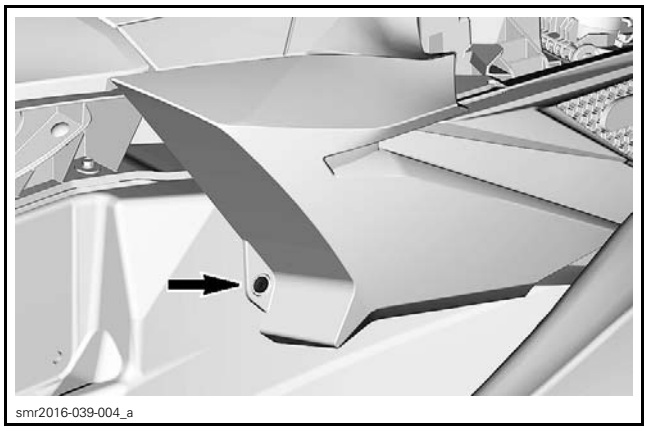

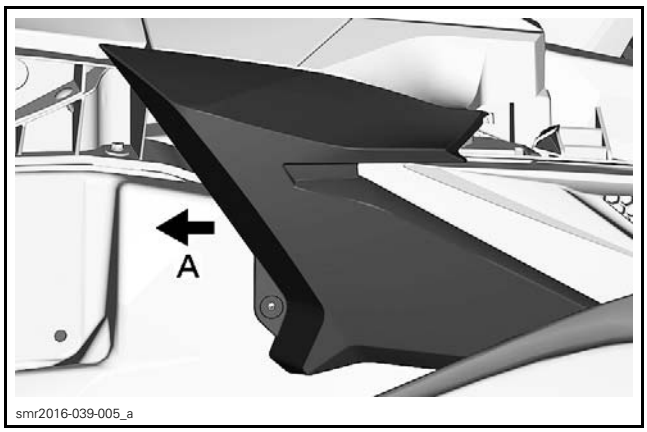

A. 12 mm (1/2 in)

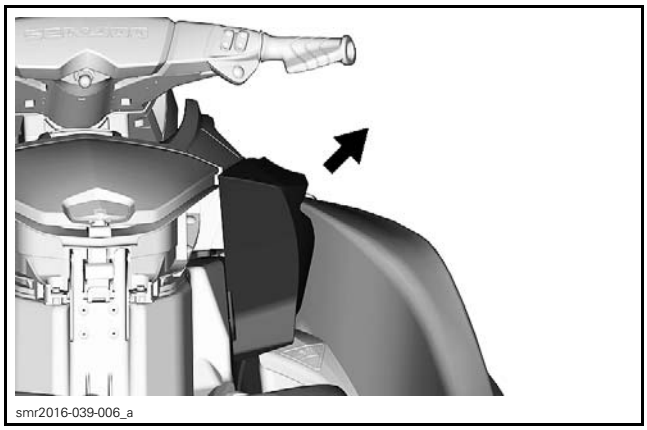

Installing the Lateral Cover

The installation is the reverse of the removal procedure.

LATERAL GRILLE ASSEMBLY

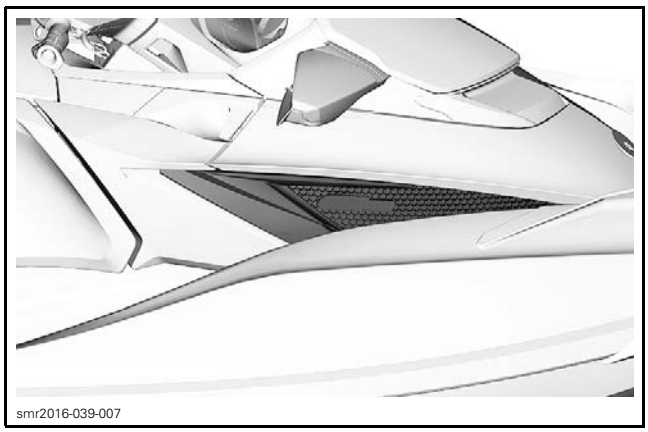
smr2016-039-007

Removing the Lateral Grille Assembly

1. Remove the:
   - *STORAGE COMPARTMENT COVER*
   - Storage bin
   - *FRONT GRILLE*
   - *LATERAL PANEL*.

   See procedure in this subsection.
2. Drill the rivet securing the lateral grille assembly.

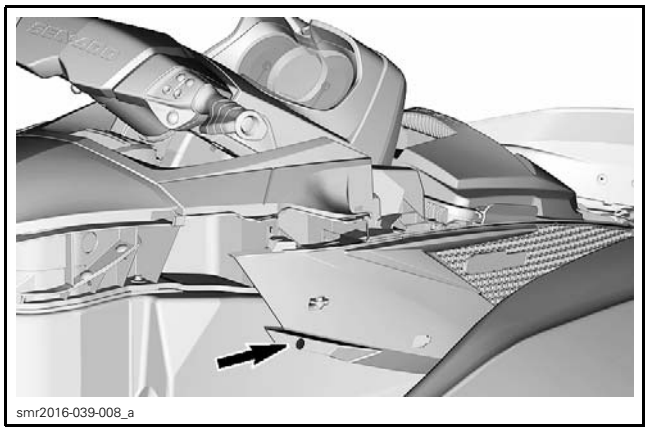
smr2016-039-008_a

Models with Suspension

3. At the front of front body module, remove screws.

All models

4. Unlock rear and center retaining tabs.

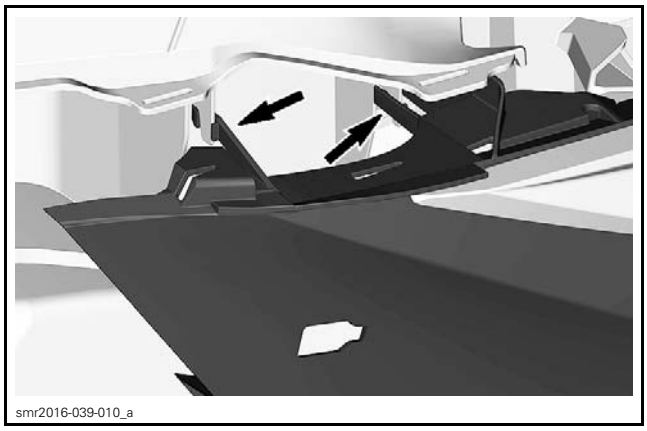
smr2016-039-010_a

RH SIDE SHOWN

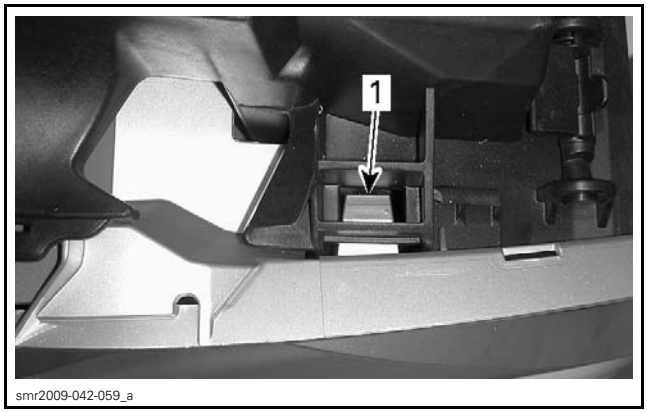

smr2009-042-059_a

RH SIDE SHOWN
1. Center retaining tab

5. Unlock the four retaining tabs securing the front of the grille assembly.

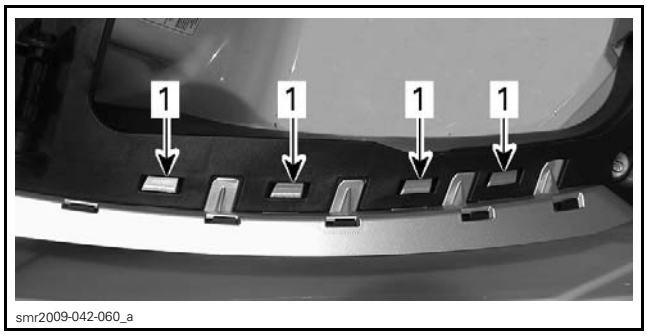

smr2009-042-060_a

RH SIDE SHOWN
1. Front retaining tab

6. Remove the grille assembly.

Installing Body Cover

The installation is the reverse of the removal procedure.

FRONT BODY MODULE

smr2016-039-009

Removing the Front Body Module

1. Refer to appropriate procedures and remove the following parts:
   - Storage compartment cover
   - Storage bin
   - Glove box cover
   - Lateral grille assembly
   - Steering and steering lock
2. Remove both screws and washers located at rear end.

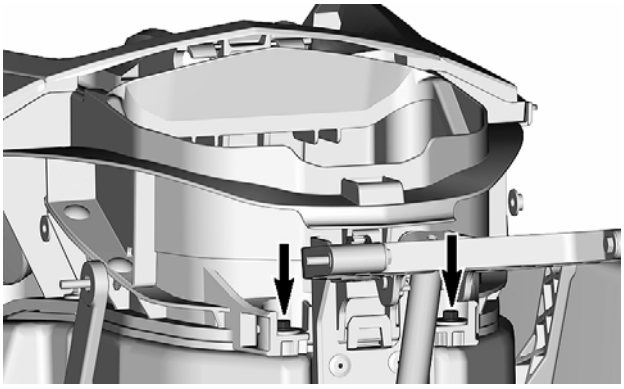

smr2016-039-011_a

3. On each side of front body module, remove both retaining screws.

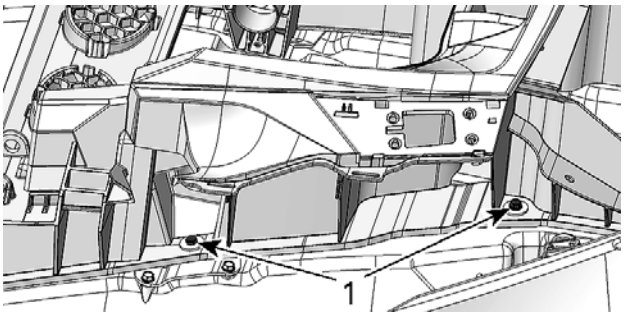

smr2009-042-062_a

1. LH side retaining screws

4. At the front of body module, remove screws.

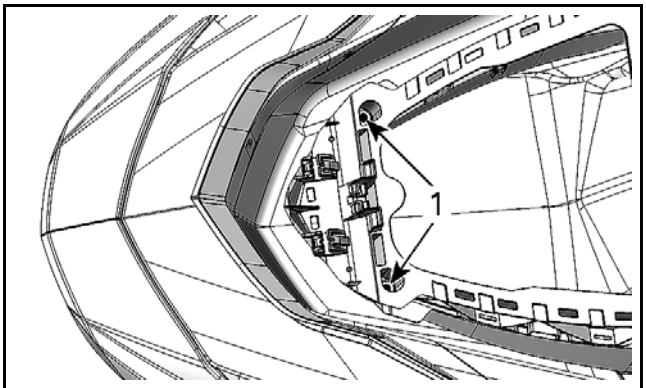

smr2009-042-063_a

1. Front retaining screws

5. Unlock retaining tabs.

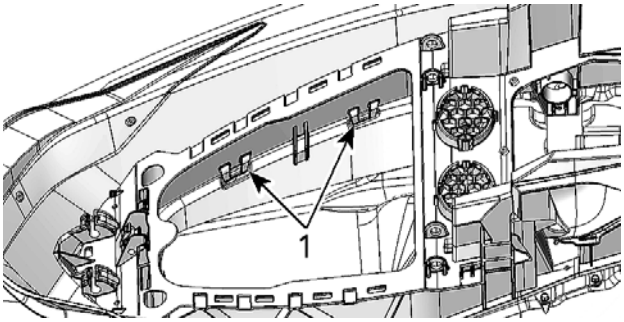

smr2009-042-064_a

1. Front body module retaining tabs

6. Remove front body module.

Installing the Front Body Module

The installation is the reverse of the removal procedure. However, pay attention to the following.

Install all module screws.

Tighten screws to specification as per following tightening sequence.

TIGHTENING TORQUE	
Front body module screw	8 N•m ± 1 N•m (71 lbf•**in** ± 9 lbf•**in**)

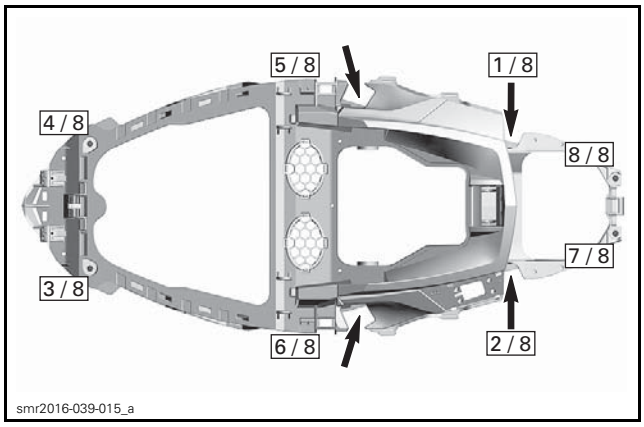

SPEED-TIE UNIT

Removing the Front Speed-Tie Unit

1. Open seat and storage cover.
2. Remove the LH *LATERAL PANEL*.
3. Remove Speed-Tie trim by releasing both retaining tabs.

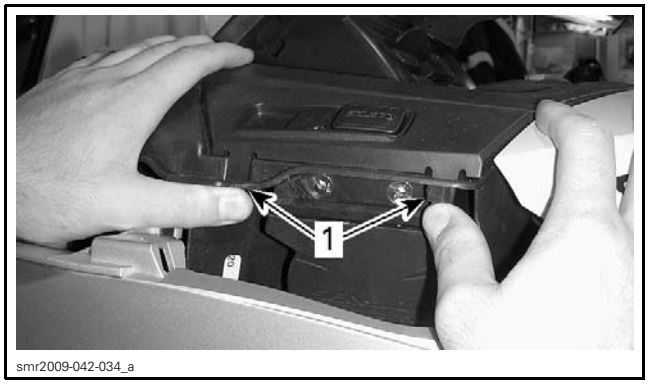

1. Retaining tabs

4. Using a small screwdriver, release both retaining hooks securing the cam trim on locking mechanism.

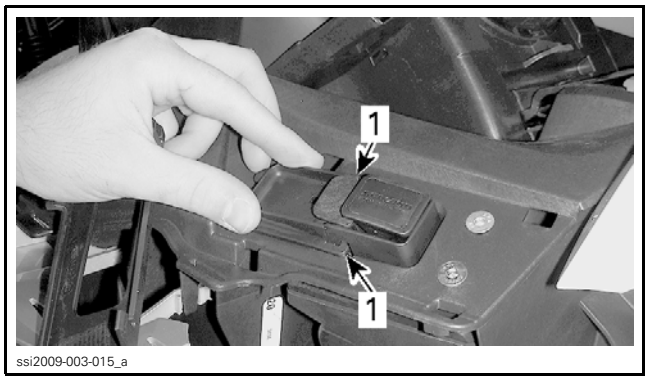

1. Retaining hooks

5. Remove screws retaining the Speed-Tie unit.
6. Position the reel of Speed-Tie unit to the bottom of its cavity.
7. Remove the locking mechanism from vehicle.
8. Unlatch the rear tabs.

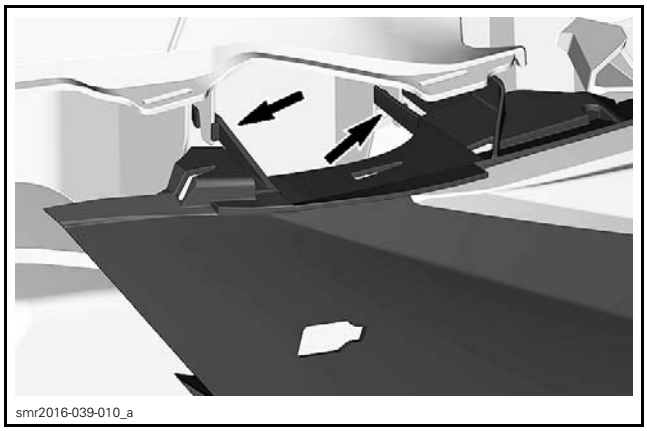

TYPICAL - RH SIDE SHOWN

9. Slightly pull on top of LH grille assembly and remove the Speed-Tie unit.

Removing the Rear Speed-Tie Unit

Models with Suspension

1. Remove screws securing the Speed-Tie unit to the boarding platform.
2. Remove rear trim by releasing retaining tabs.

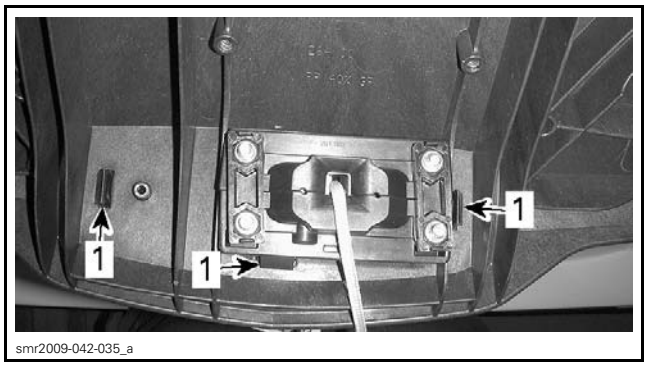

1. Retaining tabs

3. Remove screws securing the locking mechanism to the boarding platform.

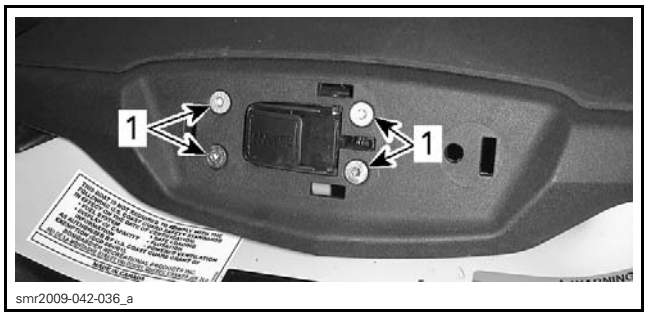

1. Retaining screws

4. Remove the Speed-Tie unit from vehicle.

Models without Suspension

1. Open seat.
2. From underneath deck, remove screws retaining the Speed-Tie cover.
3. Remove bolts securing the Speed-Tie unit to deck.

Installing the Front Speed-Tie Unit

The installation is the reverse of the removal procedure. However, pay attention to the following.

Ensure both double cage nuts are correctly inserted into Speed-Tie unit cavities.

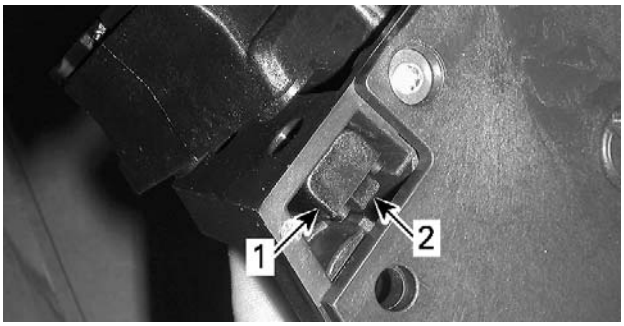

ssi2009-003-007_a

1. Double cage nut
2. Positioning tab

NOTE: To facilitate the locking mechanism insertion, temporarily pull approximately 200 mm (8 in) of rope between reel and locking mechanism.

1. Position the reel to the bottom of its cavity.

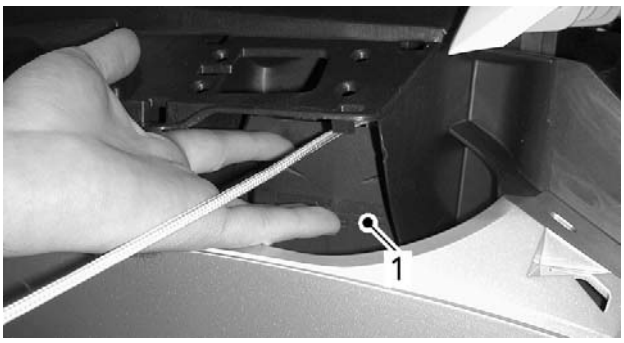

ssi2009-003-012_a

1. Push in the reel

2. Lift the lever and insert the locking mechanism so that the lever is pointing toward the front of vehicle.

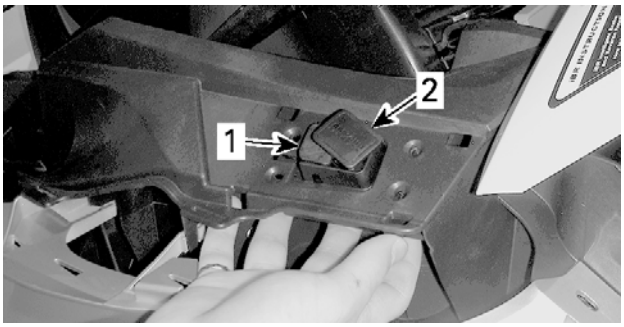

ssi2009-003-013_a

1. Locking lever
2. Rope

3. Align the reel with the locking mechanism.
4. Tighten locking mechanism retaining screws to specification.

TIGHTENING TORQUE	
Locking mechanism screw	4 N•m ± 1 N•m (35 lbf•**in** ± 9 lbf•**in**)

5. Test Speed-Tie operation.

Installing the Rear Speed-Tie Unit

The installation is the reverse of the removal procedure. However, pay attention to the following.

Models with Suspension

NOTE: To facilitate the locking mechanism insertion, temporarily pull approximately 200 mm (8 in) of rope.

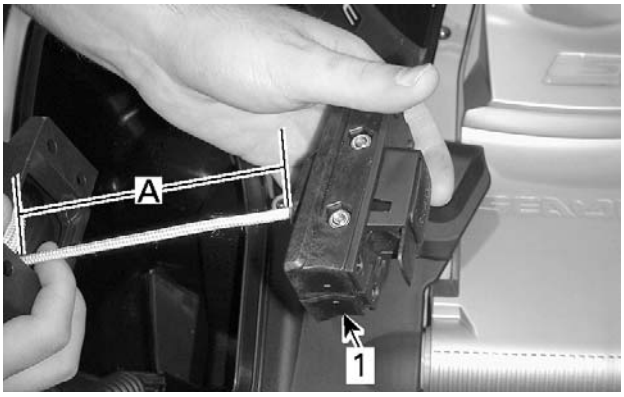

ssi2009-003-101_a

1. Locking mechanism
A. 200 mm (8 in)

1. Insert the locking mechanism in boarding platform opening. Position the locking lever toward the slot.

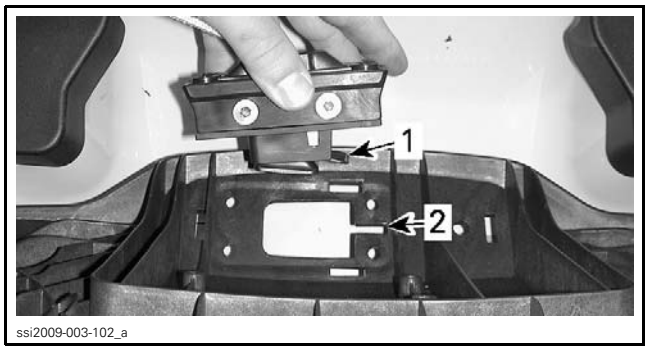

1. *Locking lever*
2. *Boarding platform slot*

2. Position a double cage nut on the locking mechanism.

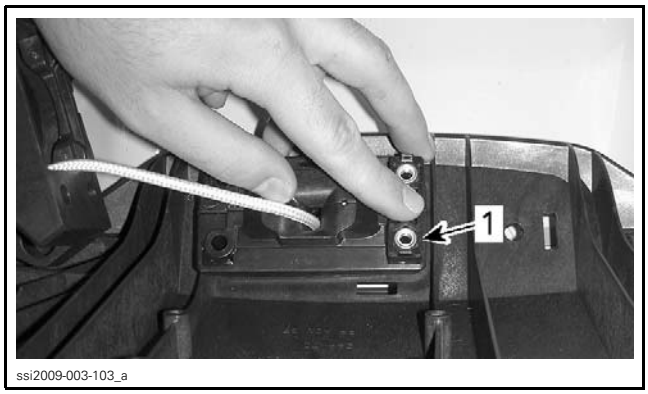

1. *Double cage nut*

3. Secure it using retaining screws.

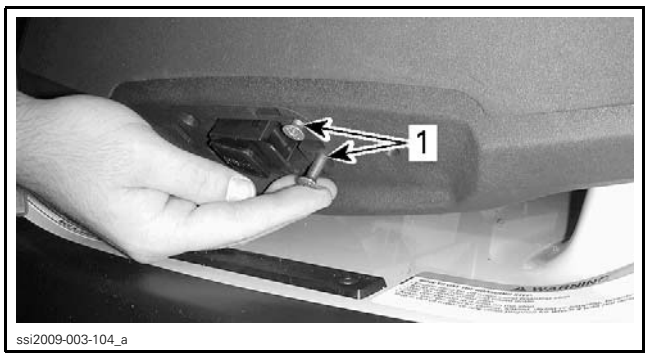

1. *Retaining screws (M6 x 45)*

4. Install the second double cage nut.
5. Secure the reel of the Speed-Tie unit on boarding platform.
6. Tighten all screws to specification.

TIGHTENING TORQUE	
Speed-Tie unit screw	5 N•m ± 1 N•m (44 lbf•**in** ± 9 lbf•**in**)
Locking mechanism screw	2.5 N•m ± 0.5 N•m (22 lbf•**in** ± 4 lbf•**in**)

7. Test Speed-Tie operation.

Models without Suspension

1. Clean all residues of silicone from deck and Speed-Tie cover.
2. Apply CLEAR SILICONE SEALANT (P/N 296 000 309) in the Speed-Tie unit holes.

3. Align Speed-Tie unit holes with body holes.
4. Install and tighten Speed-Tie unit retaining screws to specification.

TIGHTENING TORQUE	
Speed-Tie unit screw	8 N•m ± 1 N•m (71 lbf•**in** ± 9 lbf•**in**)

5. Pull the locking lever to allow cover installation.

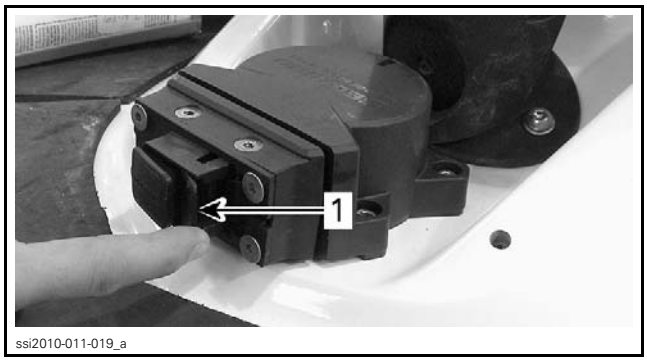

1. *Locking lever*

6. To facilitate new cover installation and avoid cross threading, install both Plastite screws in cover posts (approximately 3-4 turns). Then, remove screws.

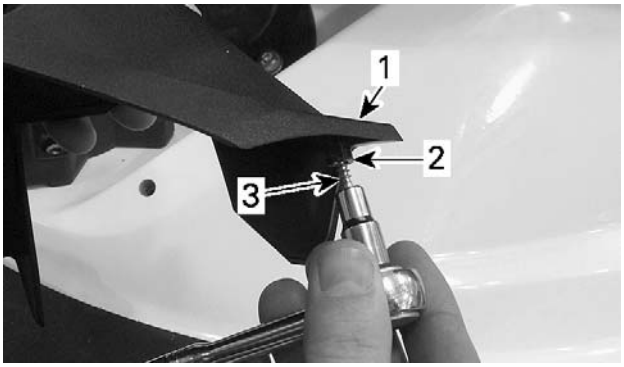

ssi2010-011-020_a

1. *Cover*
2. *Cover posts*
3. *Plastite screws K40 x 13*

7. Apply CLEAR SILICONE SEALANT (P/N 296 000 309) all around both cover holes.

ssi2010-011-021

8. Install the cover.
   8.1 Insert cover opening over the mooring rope stopper and the locking lever.

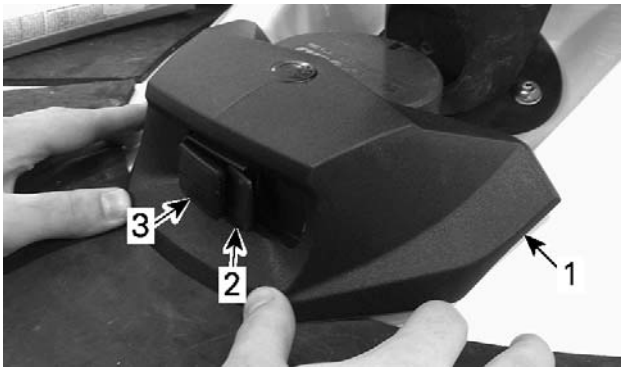

ssi2010-011-022_a

1. *Cover*
2. *Locking lever*
3. *Mooring rope stopper*

   8.2 Insert cover posts into cover holes.

   NOTE: Due to the drilling precision, it may be necessary to pry slightly the cover to insert cover posts into cover holes.

   8.3 From underneath deck, secure the cover with Plastite screws and flat washers. To avoid damaging the cover, stop tightening as soon as the washers are against the deck.

TIGHTENING TORQUE	
Speed-Tie unit cover screw	0.9 N•m ± 0.1 N•m (8 lbf•**in** ± 1 lbf•**in**)

9. Test Speed-Tie operation.

Cleaning the Speed-Tie Unit

A minimum of maintenance is required to keep the Speed-Tie unit and the rope in serviceable condition.

Clean the locking mechanism and rope with fresh water to remove salt, sand or other deposits.

NOTICE **Do not use a high pressure washer to clean the Speed-Tie unit.**

Let dry.

Replacing the Speed-Tie Rope

1. Remove the Speed-Tie unit from the vehicle.
2. Using a small tool, remove the rope cap.

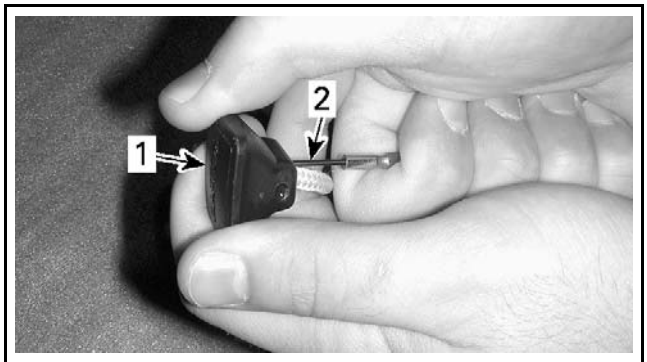

ssi2009-003-017_a

1. *Cap*
2. *Small screwdriver*

3. Untie the knot and remove the button.

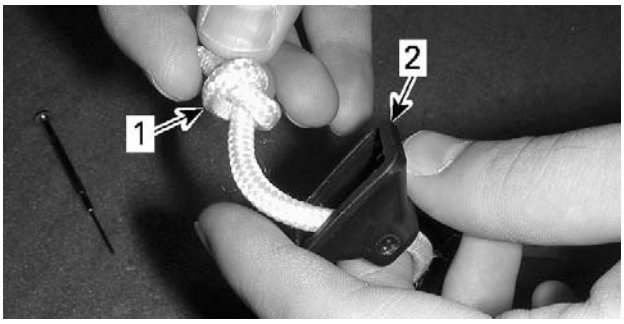

ssi2009-003-018_a

1. *Untie this knot*
2. *Button*

4. Remove the locking mechanism and let the rope retracts into housing.
5. Remove the back cover.

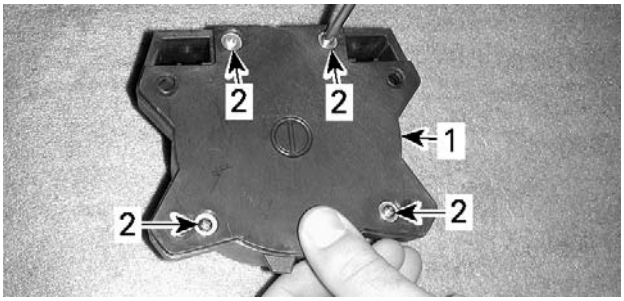

ssi2009-003-019_a

1. *Back cover*
2. *Retaining screws*

6. Remove the rewind unit.

ssi2009-003-020_a

1. *Rewind unit*

7. Turn the unit upside down and remove the retaining screw.

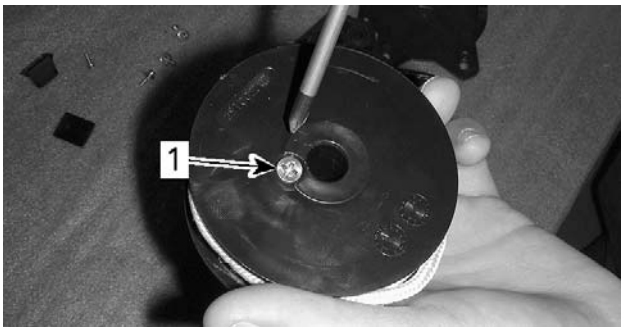

ssi2009-003-021_a

1. *Retaining screw*

8. Split the rewind unit and remove damaged rope.

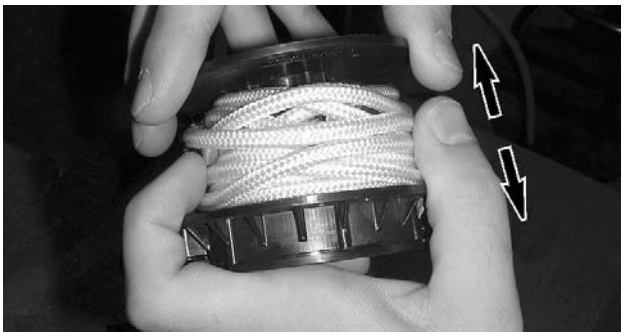
ssi2009-003-022_a

9. Before discarding rope, remove and keep the inner stopper.

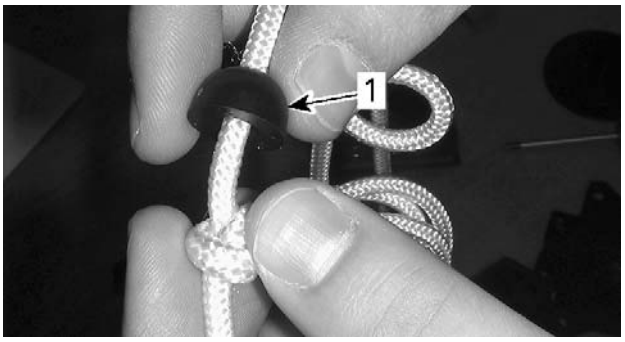

ssi2009-003-023_a

1. *Inner stopper*

10. Insert the inner stopper on new rope and tie a knot near the end of the line. Position the inner stopper in order to its flat side leans against the knot.

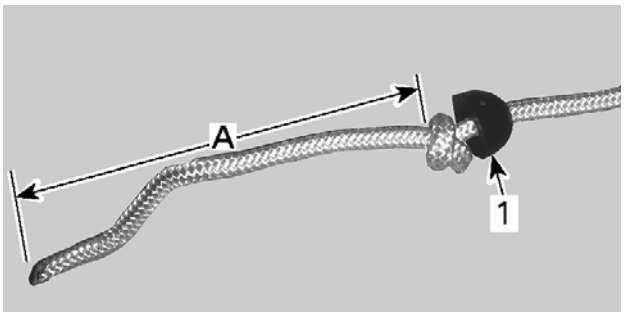

ssi2009-003-025_a

1. Inner stopper
A. 106 mm ± 6 mm (4-1/8 in ± 15/64 in)

11. On rewind unit base, identify the short tongue.

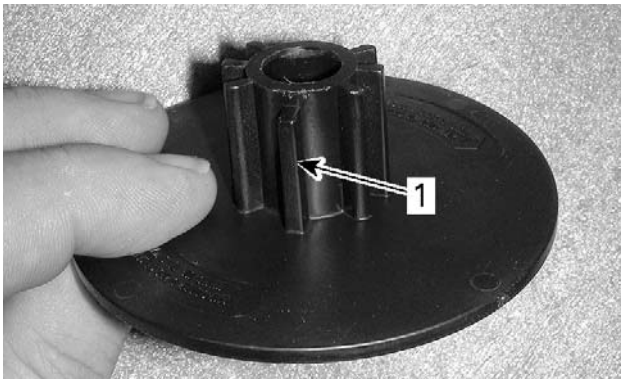

ssi2009-003-026_a

1. Short tongue

12. Install the rope end (with the knot) over the short tongue as shown.

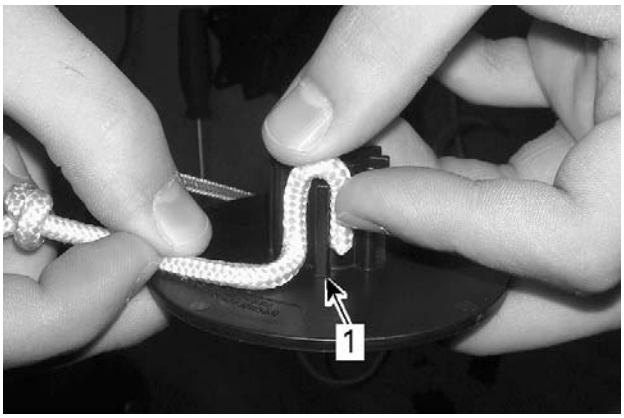

ssi2009-003-027_a

1. Short tongue

13. Install the rewind unit cover.
    13.1 Align the cover notch and the rope.

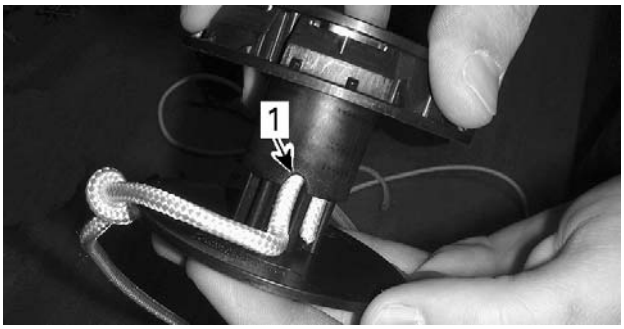

ssi2009-003-028_a

1. Cover notch

    13.2 Press in the cover until both parts are completely pressed together.

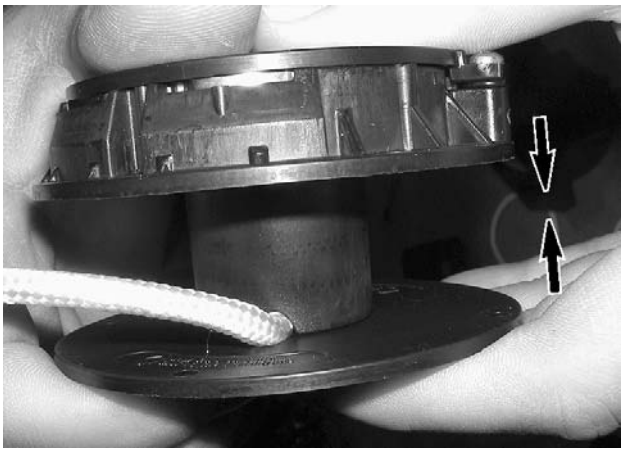
ssi2009-003-029_a

    13.3 Install and tighten retaining screw to specification.

TIGHTENING TORQUE	
Rewind unit cover screw	1.1 N•m ± 0.1 N•m (10 lbf•**in** ± 1 lbf•**in**)

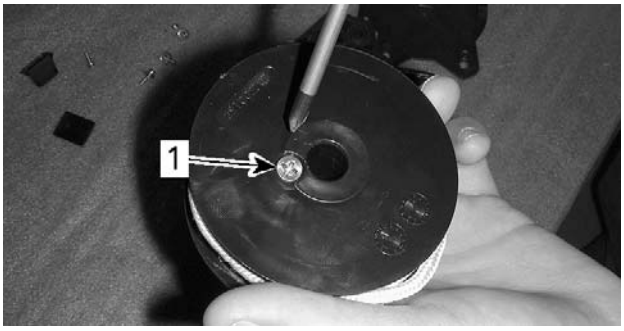

ssi2009-003-021_a

1. Rewind unit cover retaining screw

14. Turn rope clockwise. Check indications on inner side of rewind unit.

ssi2009-003-030

15. Lock the end of rope as shown.

ssi2009-003-031

16. Install rewind unit into housing.
    16.1 Install the rewind unit with the retaining screw downward. The end of rope must be placed in front of the housing opening.
    16.2 Insert spring in shaft notch.

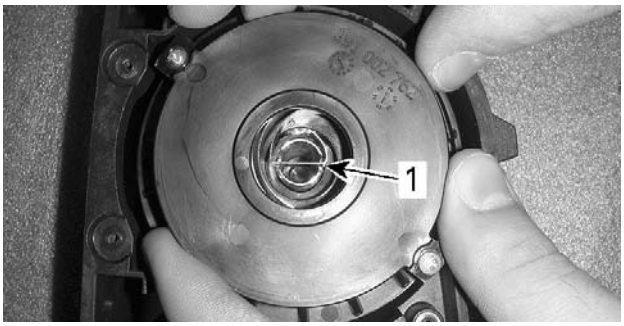

ssi2009-003-032_a

1. Spring in notch

NOTE: Ensure spring is properly inserted in notch.

17. Using a screwdriver, crank rewind spring exactly 7 turns (clockwise).

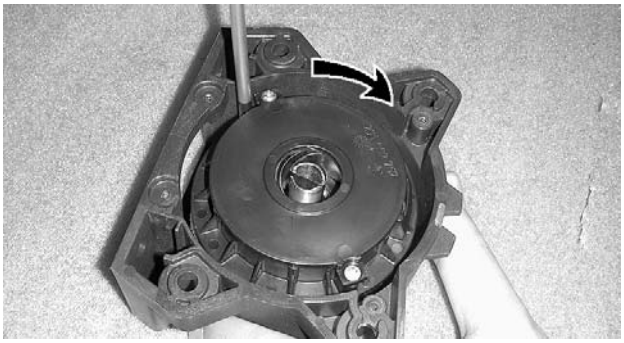
ssi2009-003-033_a

18. Unlock the end of the rope and pull it out by the housing opening.

NOTE: Be careful not to release the rope and the spring. Otherwise you will need to remove drum and repeat the cranking operation.

19. Install locking mechanism and rope.
    19.1 Pull out rope end.
    19.2 Insert end of rope through locking mechanism.

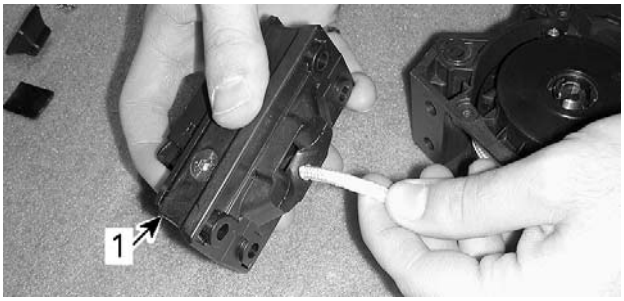

ssi2009-003-034_a

1. Locking mechanism

    19.3 Pass rope end through the rope button and tie a knot on the rope end, see picture.

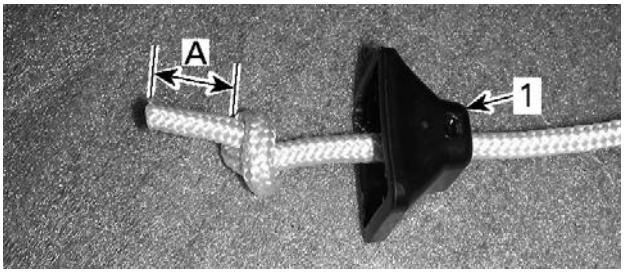

ssi2009-003-035_a

1. Rope
A. 18 mm ± 6 mm (23/32 in ± 15/64 in)

    19.4 Pull knot in the button and install the button cap. Make sure cap is properly snapped.

20. Install and tighten Speed-Tie cover retaining screws to specification.

TIGHTENING TORQUE	
Speed-Tie cover screw	0.9 N•m ± 0.1 N•m (8 lbf•**in** ± 1 lbf•**in**)

21. Check Speed-Tie operation.
22. Reinstall the Speed-Tie unit on vehicle.

BOARDING PLATFORM (MODELS WITH SUSPENSION)

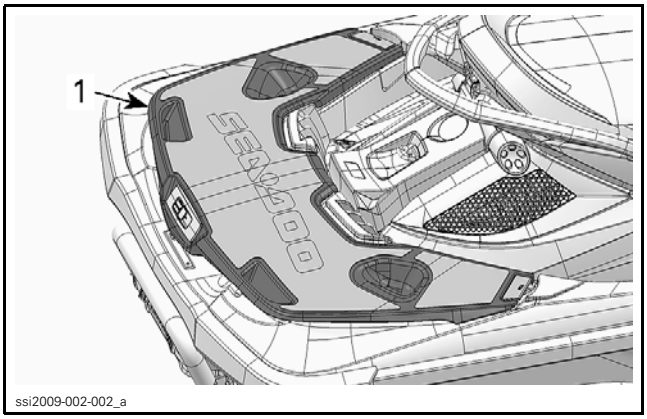

ssi2009-002-002_a

1. Boarding platform

Removing the Boarding Platform

1. Unlatch the boarding platform.
2. Open boarding platform completely.
3. Remove plastic dart securing rear shock assembly support.

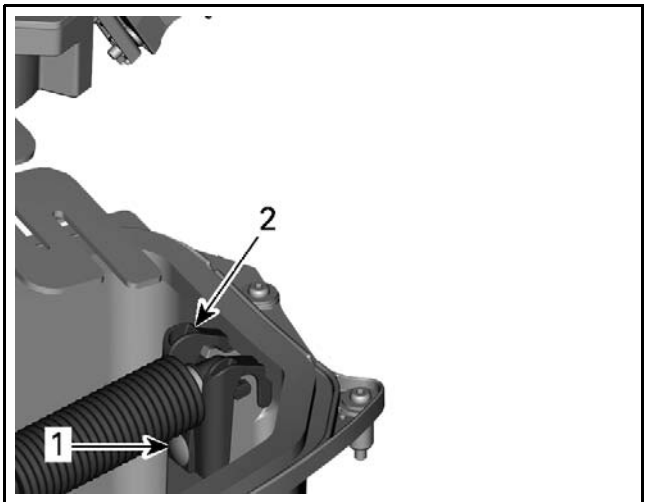

smr2013-010-002_b

TYPICAL - PARTS REMOVED FOR CLARITY
1. Plastic dart
2. Rear shock assembly support

4. Remove rear shock assembly support.

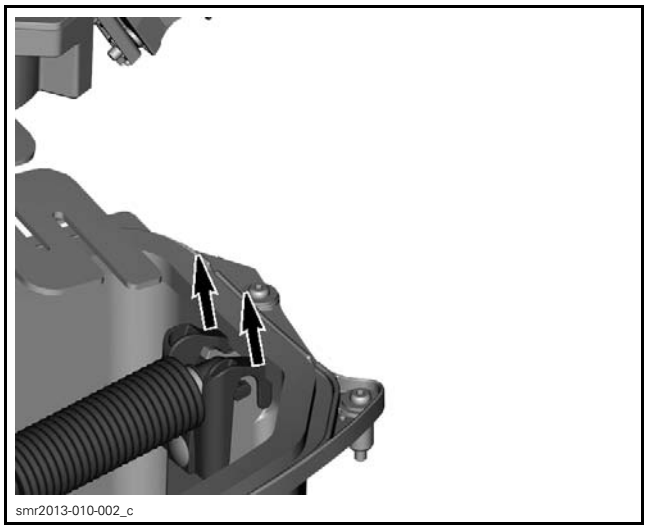
smr2013-010-002_c

TYPICAL - PARTS REMOVED FOR CLARITY

5. Remove front shock assembly support.
6. Cut locking ties retaining the bellows of gas shock.

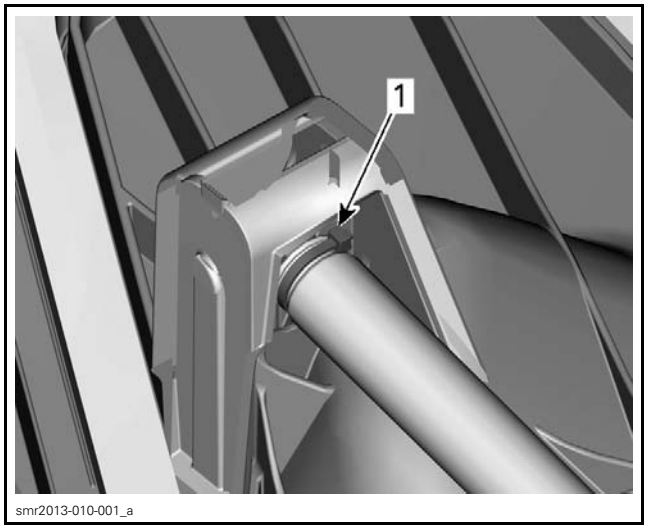

smr2013-010-001_a

1. Cut this locking tie

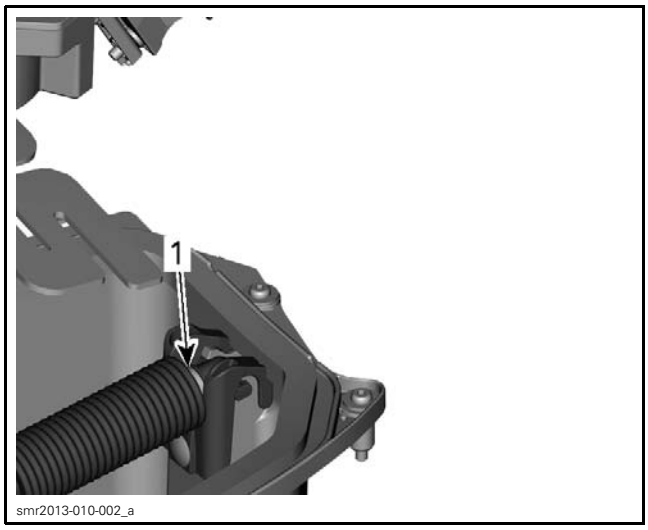

TYPICAL
1. *Cut this locking tie*

7. Move bellows downward.
8. Unscrew gas shock from its upper attachment.
9. Remove gas shock from vehicle.
10. Align boarding platform hinge openings with flat sides of fixed hinges.

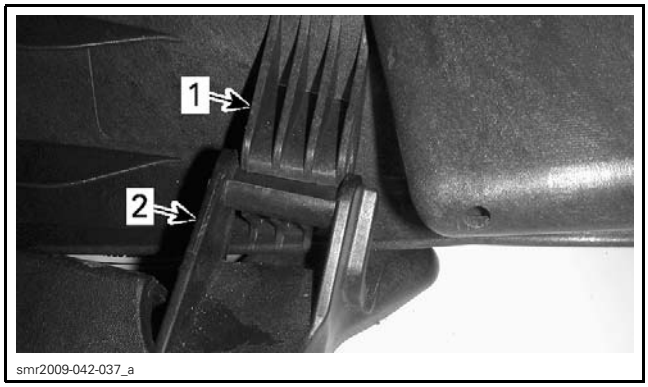

1. *Boarding platform hinge*
2. *Fixed hinge*

11. Remove boarding platform.

Installing the Boarding Platform

1. Remove gas shock attachment from boarding platform.
2. Apply LOCTITE 414 (P/N 413 705 800) on threads of shock absorber body.
3. Manually tighten the attachment on gas shock.
4. Install the bellows and secure it using a locking tie.
5. Install the gas shock on cover.

NOTE: The corrugated section of bellows must point downward.

6. Align boarding platform hinge openings with flat sides of fixed hinges.
7. Push in the boarding platform to assemble hinges.
8. Position the bottom of the gas shock on cavity opening.

NOTICE **To avoid breaking the attachment, do not force to insert it in cavity.**

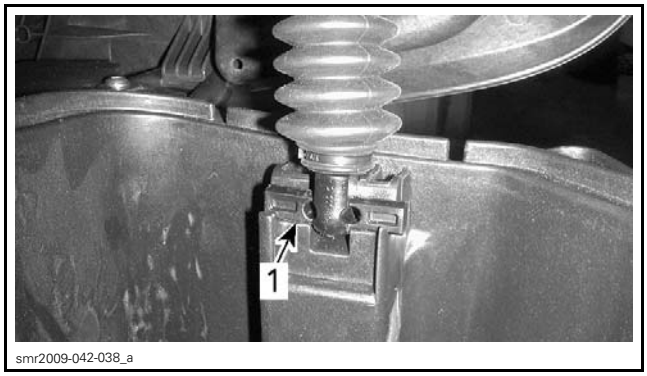

1. *Lower attachment on cavity opening*

NOTE: Make sure upper attachment is properly inserted in its slots.

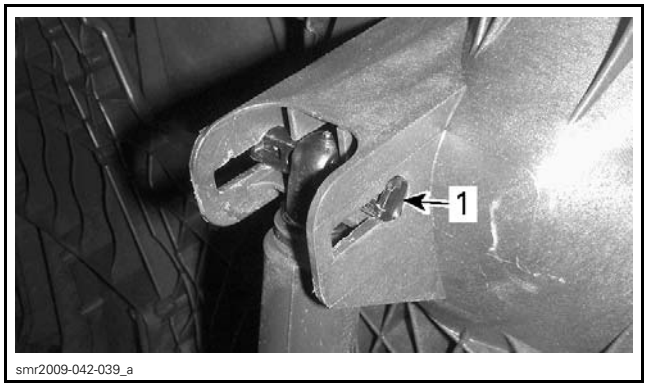

1. *Upper attachment*

9. Install rear shock assembly support onto rear shock and securing in place using plastic dart.

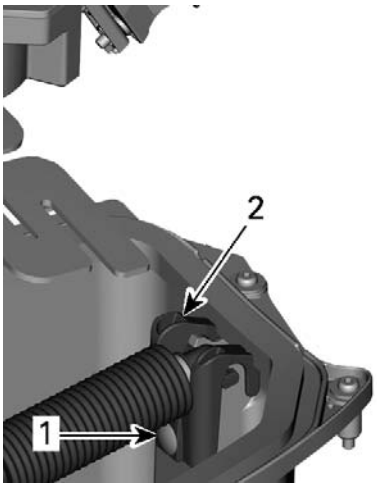

smr2013-010-002_b

TYPICAL - PARTS REMOVED FOR CLARITY
1. *Plastic dart*
2. *Rear shock assembly support*

10. Close boarding platform to lock the bottom of the gas shock.
11. Lock boarding platform.

DECK EXTENSION (MODELS WITH SUSPENSION)

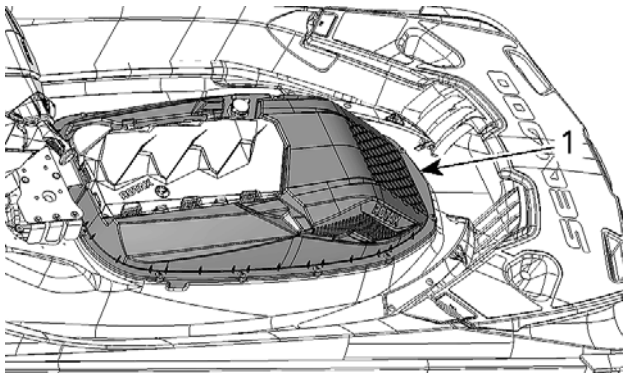

smr2009-042-009_a

1. *Deck extension*

Removing the Deck Extension

1. Open seat.
2. Remove the rear ventilation box.

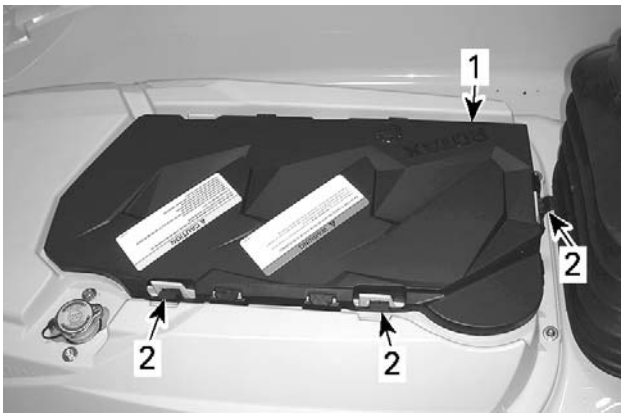

smr2009-016-001_a

1. *Rear ventilation box*
2. *Retaining latches*

3. Close seat.
4. Tilt the *MOVING DECK*, see procedure in this subsection.
5. Remove coolant reservoir screws.

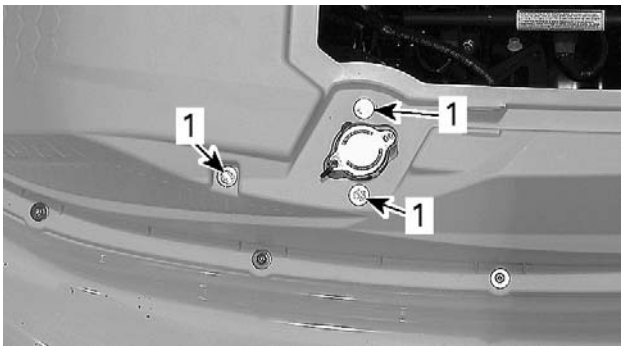

smr2009-042-021_a

1. *Coolant reservoir screws*

6. Remove all screws retaining deck extension to fixed deck.
7. Remove the deck extension.

Installing the Deck Extension

1. Position the deck extension.
2. Install all screws retaining deck extension.
3. Tighten screws to specification as per following sequence.

TIGHTENING TORQUE	
Deck extension screw	1.7 N•m ± 0.1 N•m (15 lbf•**in** ± 1 lbf•**in**)

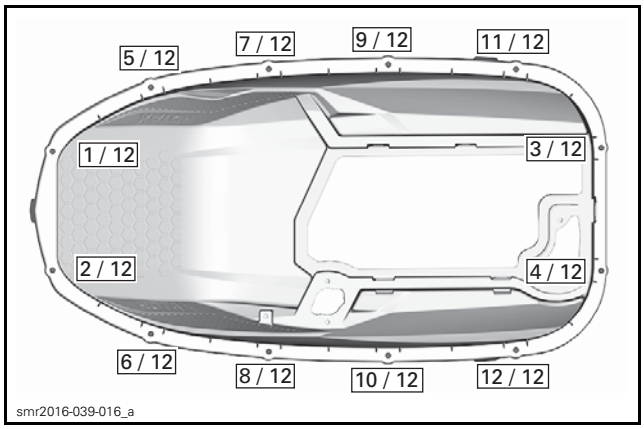

NOTICE **Do not tighten screws over this recommended torque. Otherwise, the rubber grommet could turns and screw will be hard to remove.**

4. Install and tighten coolant reservoir screws to specification.

TIGHTENING TORQUE	
Coolant reservoir screw	5 N•m ± 1 N•m (44 lbf•**in** ± 9 lbf•**in**)

5. Reposition moving deck. Refer to *MOVING DECK* in this subsection.

MOVING DECK (MODELS WITH SUSPENSION)

The moving deck is comprised of:
– Front storage cover
– Front body module
– Steering
– Seat
– Foot wells.

The moving deck is attached to the intelligent suspension and moves as a single unit.

The moving deck does not comprise the boarding platform and the rear storage bins.

It is possible to tilt the moving deck for servicing the watercraft, such as:
– Deck extension removal
– Working on air intake system
– Suspension position sensor replacement
– Suspension hydraulic pump replacement.

The moving deck removal is also required for major repairs, such as:
– Engine removal
– Suspension component removal (except suspension position sensor)
– Fuel tank removal.

Tilting Moving Deck for Servicing Watercraft

1. Remove the *BOARDING PLATFORM*, see procedure in this subsection.
2. Remove bolts securing both rear suspension arm covers.

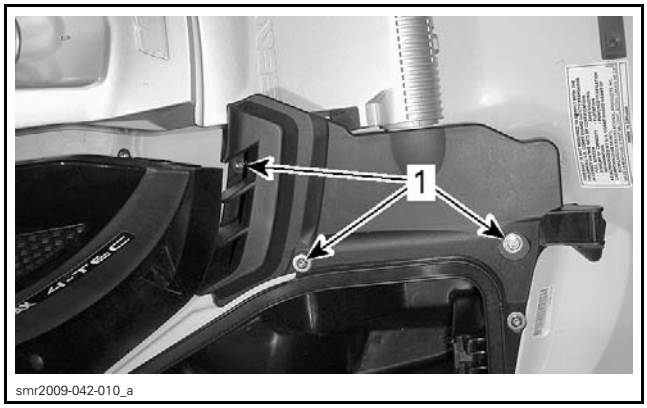

1. Cover screws

3. Mark position of rear suspension arm brackets for proper reinstallation.
4. Remove and discard screws securing rear suspension arm to fixed deck.

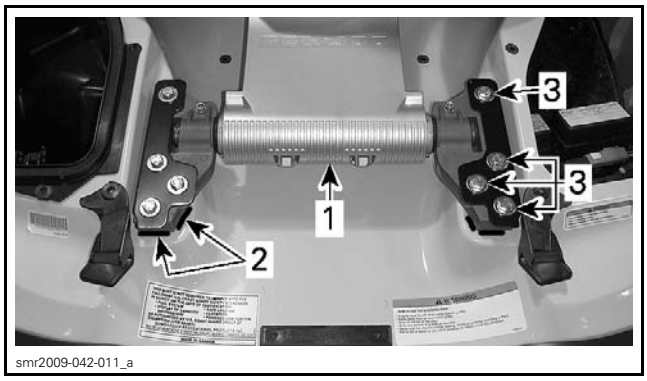

1. Rear suspension arm
2. Reinstallation marks
3. Screws (discard)

5. Lift the rear suspension arm against seat handle and attach it with locking tie or strap.

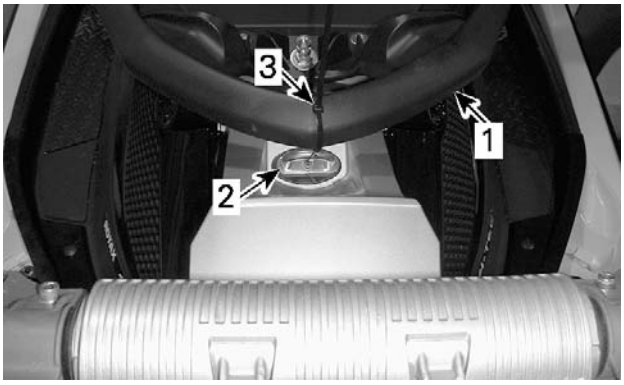

smr2009-042-012_a

1. *Seat handle*
2. *Ski/wakeboard attachment*
3. *Locking tie*

6. Install two pieces of wood (4 x 4) under moving deck front area as shown to avoid potential damage when lifting the moving deck.

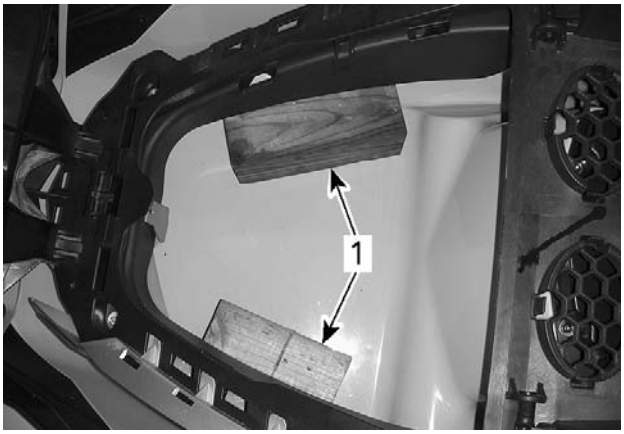

smr2009-042-022_a

1. *Pieces of wood*

7. Place steering in its lower position.
8. On aS models, ensure that remote reservoir hose has enough free length before tilting the moving deck.
   – If hose is too tight, remove remote reservoir retaining screws then move hose inside deck.

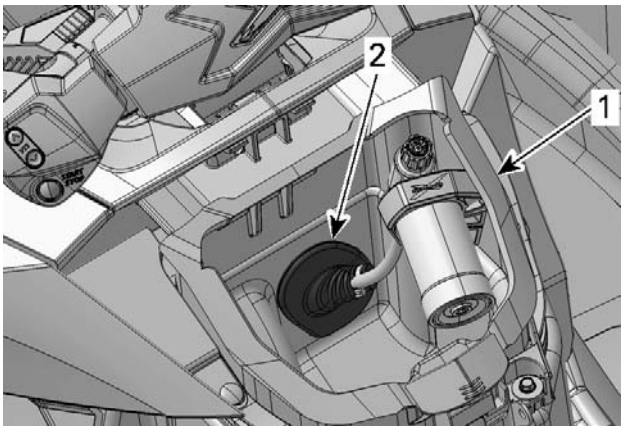

smr2011-040-004_a

aS MODEL
1. *Remote reservoir retaining screws (2x)*
2. *Hose bellows*

9. Using suitable lifting devices, raise the rear of moving deck to 340 mm (13-1/2 in).

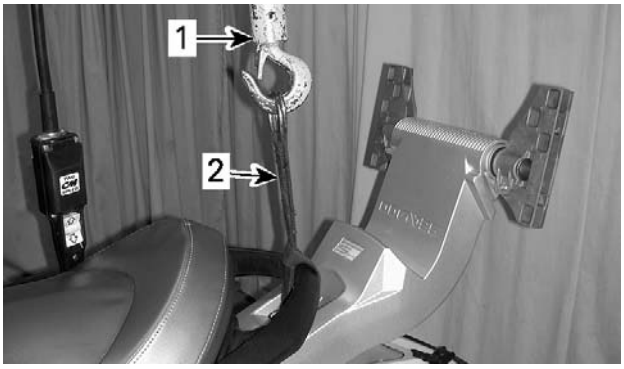

smr2009-042-066_a

1. *Hoist*
2. *Lifting strap*

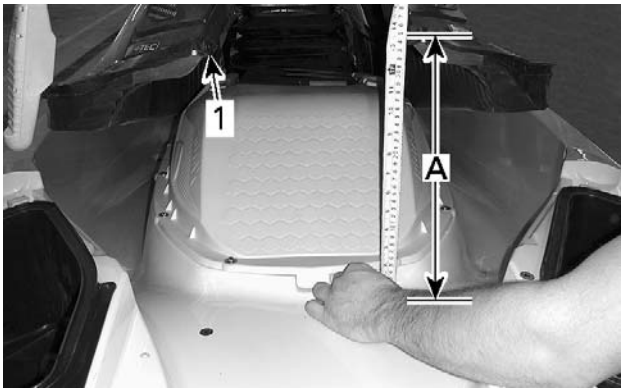

smr2009-042-023_a

1. *Use this rivet as reference point*

A. *340 mm (13-1/2 in)*

NOTICE **Lifting the rear of moving deck more than the recommended height can damage the steering cable and the remote reservoir hose.**

Lowering Back Moving Deck

1. Carefully lower and secure the rear suspension arm to the fixed deck.
   1.1 Position the rear suspension arm brackets in accordance with the reference marks previously drew on fixed deck.

   NOTICE **If no mark was trace, refer to *iS SUSPENSION* subsection for proper procedure to install and align the rear suspension arm.**

   1.2 Install **NEW** screws to secure rear suspension arm brackets.
   1.3 Tighten screws to specification.

TIGHTENING TORQUE	
Rear suspension arm screw	25 N•m ± 3 N•m (18 lbf•ft ± 2 lbf•ft)

2. Detach lifting device.
3. Remove pieces of wood located under the front of moving deck.

Removing the Moving Deck for Servicing Watercraft

1. Open the front storage cover and remove the front basket.
2. On aS models, remove remote reservoir from moving deck as follows:
   2.1 Remove both retaining screws.
   2.2 Detach hose bellows from moving deck.
   2.3 Insert remote reservoir into moving deck hole.

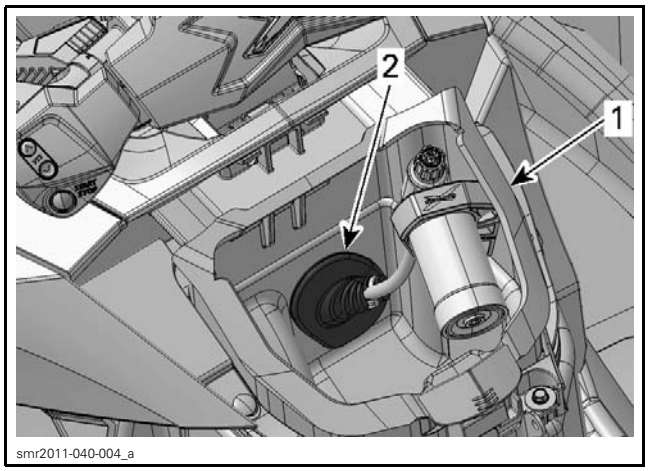

smr2011-040-004_a

aS MODEL
1. *Remote reservoir retaining screws (2x)*
2. *Hose bellows*

3. Remove the *BOARDING PLATFORM*, see procedure in this subsection.
4. Remove bolts securing both rear suspension arm covers.

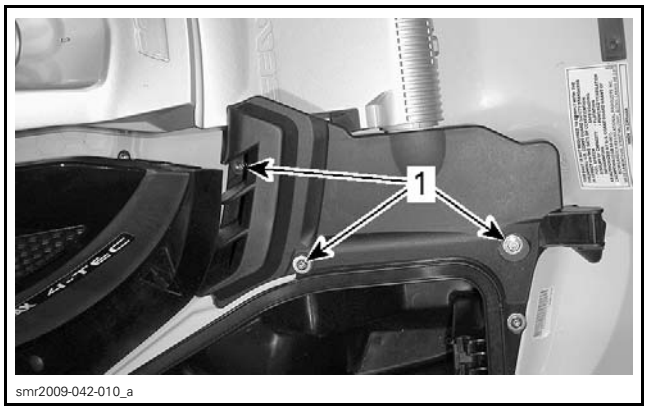

smr2009-042-010_a

1. *Cover screws*

5. Mark position of rear suspension arm brackets for proper reinstallation.
6. Remove and discard screws securing rear suspension arm to fixed deck.

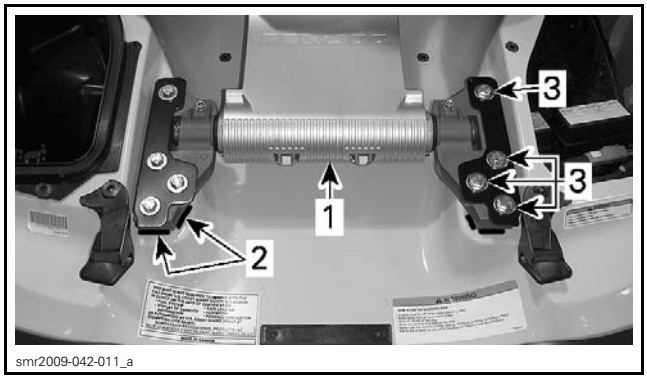

smr2009-042-011_a

1. *Rear suspension arm*
2. *Reinstallation marks*
3. *Screws (discard)*

7. Lift and attach the rear suspension arm against seat handle.

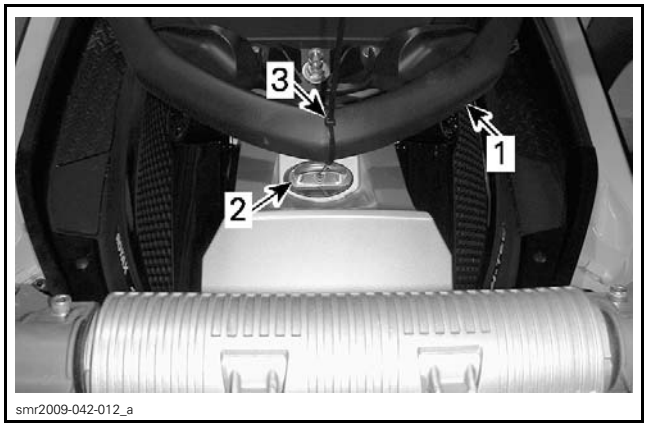

smr2009-042-012_a

1. *Seat handle*
2. *Ski/wakeboard attachment*
3. *Locking tie*

8. Manually tip up the front of moving deck and install a piece of wood (2 x 4) between fixed deck and each lateral supports.

smr2009-042-013_a

FROM THE FRONT OF VEHICLE
1. *RH lateral support*
2. *Piece of wood*

9. Detach moving deck from lateral supports.
   9.1 Remove front carpet of foot wells and protective caps on both sides of the moving deck. Discard the front carpets.

smr2009-042-014_a

RH SIDE SHOWN
1. *Front carpet (discard)*
2. *Protective cap*

   9.2 Remove and discard screws securing moving deck to lateral supports.

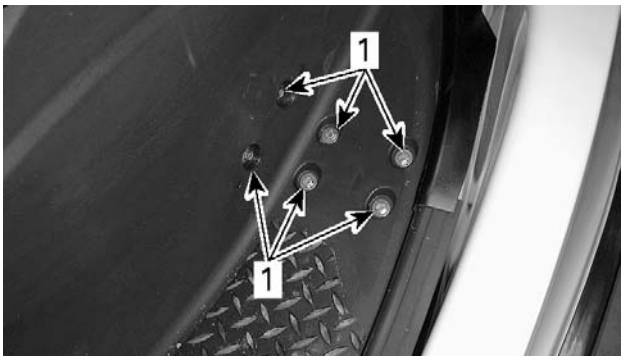

smr2009-042-015_a

RH SIDE SHOWN
1. *Retaining screws (discard)*

10. Open seat.

11. Remove and discard M8 screws securing the suspension mounting plate and moving deck.

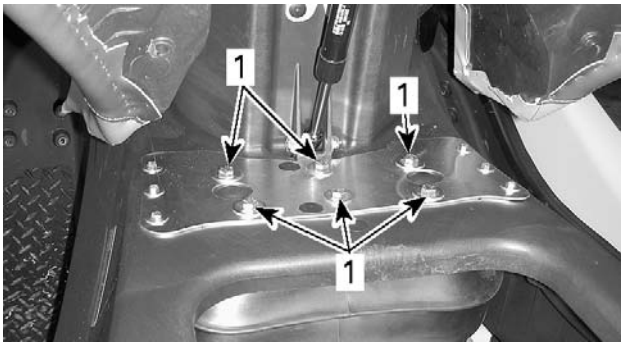

smr2009-042-016_a

1. *Moving deck central screws (to discard)*

12. Close seat.
13. Remove the gauge support. Refer to *INFORMATION CENTER (GAUGE)* subsection.
14. Disconnect both connectors under moving deck.

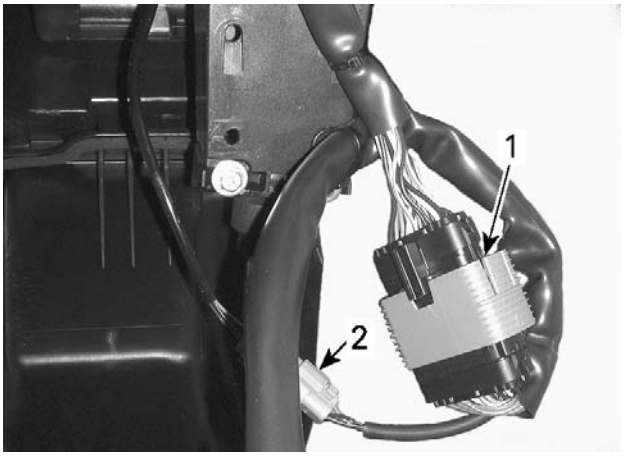

smr2010-046-015_a

1. *Steering connector*
2. *O.T.A.S. connector*

15. Detach steering cable from steering column.
   15.1 Remove bolt securing ball joint to steering column.

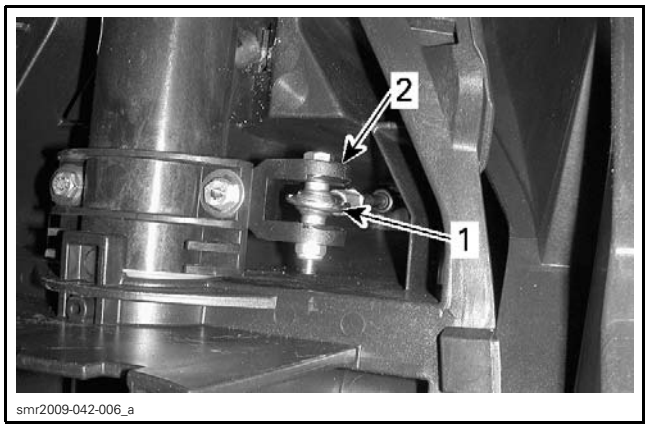

1. *Steering cable ball joint*
2. *Steering column*

15.2 Remove bolts retaining steering cable clamp.

15.3 Unlatch steering cable clamp.

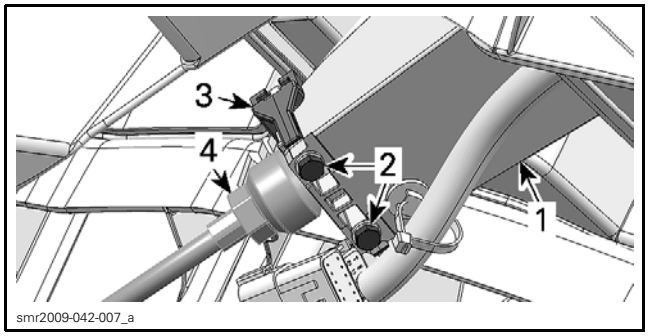

1. *Steering column*
2. *Steering column clamp bolts*
3. *Steering column clamp*
4. *Steering cable adjusting nut*

15.4 Place steering in its lower position.

15.5 Free steering cable from fixed clamp.

16. Install lifting straps.

16.1 Using both mooring cleats under steering, install two lifting straps.

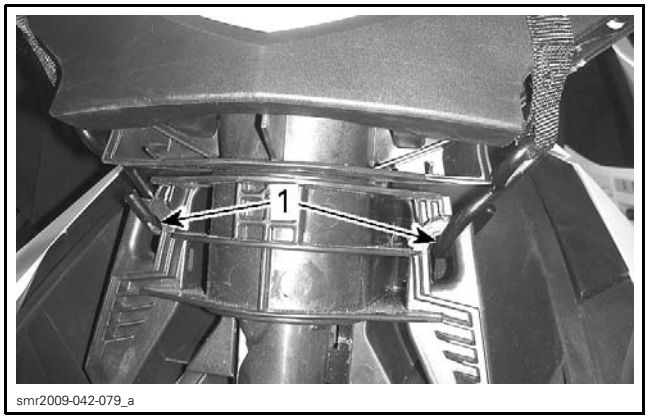

1. *Front lifting strap hooks into steering mooring cleats*

16.2 Install another lifting strap on seat handle.

17. Attach all lifting straps to an lifting device to lift the moving deck.

⚠ CAUTION Make sure lifting device is located at the center of the vehicle to rise moving deck horizontally.

18. Raise moving deck slowly and drive steering cable out of steering column.
19. Place the moving deck on a level surface.

Installing the Moving Deck

1. Install 2 pieces of wood under lateral supports.

2. Slowly, lower the moving deck just enough to be able to insert the end of steering cable in steering column.

NOTICE Make sure not to pinch electrical harness while lowering the moving deck.

3. Install steering cable clamp and its bolts. Do not tighten bolts yet.

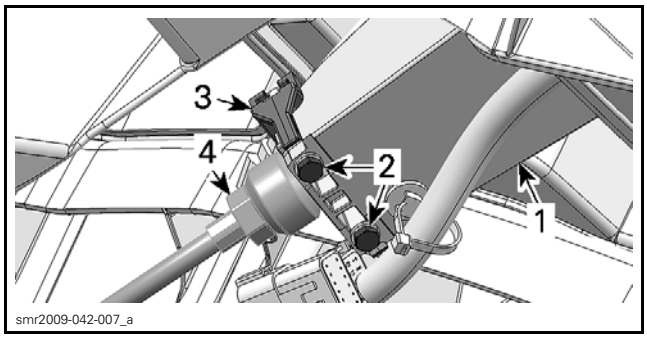

1. *Steering column*
2. *Steering column clamp bolts*
3. *Steering column clamp*
4. *Steering cable adjusting nut*

4. Connect both electrical connectors under moving deck.

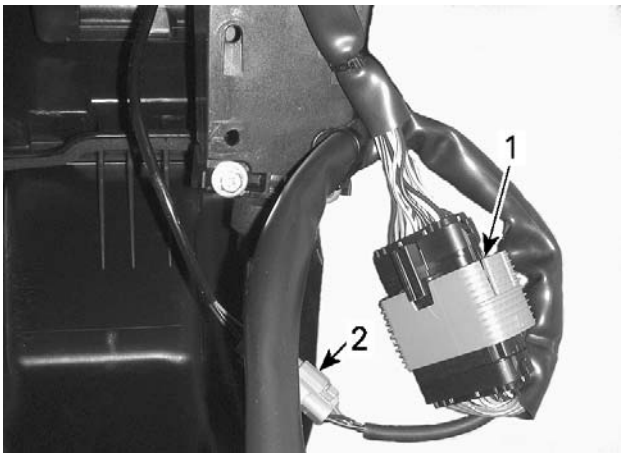

smr2010-046-015_a

1. *Steering connector*
2. *O.T.A.S. connector*

5. Lower the front of moving deck and secure it on both lateral supports using NEW screws.

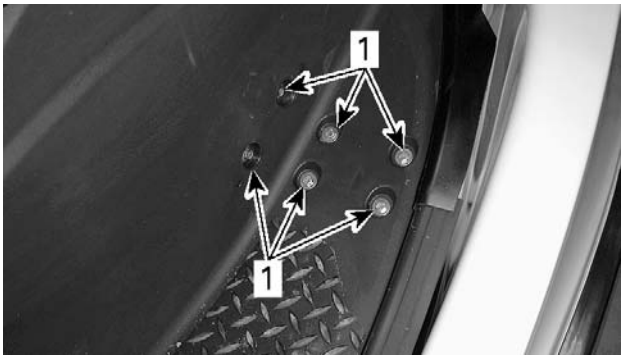

smr2009-042-015_a

RH SIDE SHOWN
1. *Retaining screws (new)*

6. Remove pieces of wood located under lateral supports and reposition one under moving deck front area.

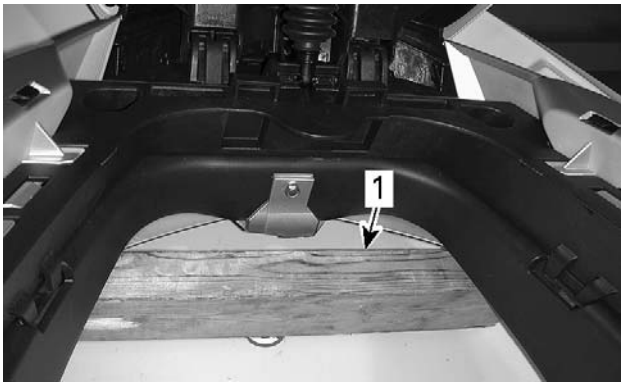

smr2009-042-090_a

1. *Install piece of wood here*

7. Remove the front lifting straps.
8. Open seat.
9. Raise rear of moving deck until suspension is clear of moving deck.

NOTICE **Do not raise the rear of moving deck more than 340 mm (13-1/2 in).**

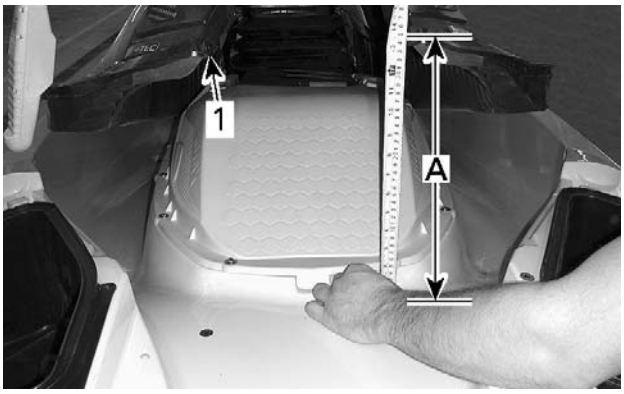

smr2009-042-023_a

1. *Use this rivet as reference point*

A. *340 mm (13-1/2 in)*

10. Install two homemade alignment pins on suspension mounting plate.
    10.1 Take two M8 x 50 bolts and cut their heads.
    10.2 Grind down the cut ends to make a rounded shape.

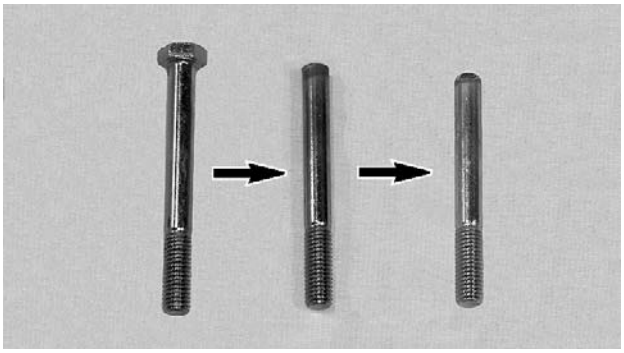
smr2009-042-073_a

    10.3 Install alignment pins into the 2 rear outside positions of suspension mounting plate.

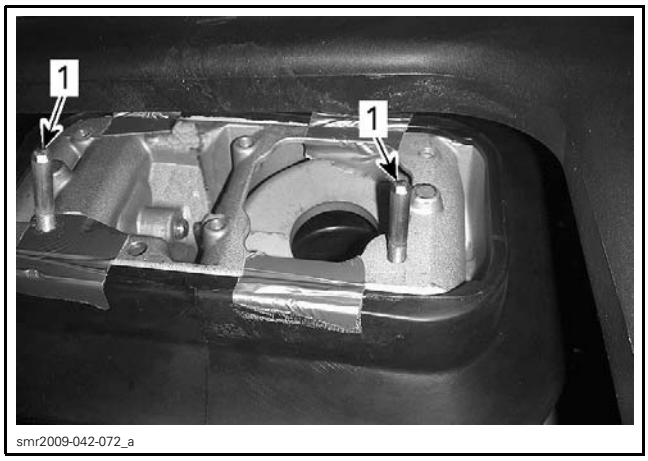

1. Alignment pins

11. Position the moving deck so that alignment pins are aligned with suspension reinforcement plate holes.
12. Lower the moving deck over alignment pins.
13. Install **NEW** M8 screws to secure the moving deck to suspension mounting plate.

NOTE: Remove the alignment pins only when 2 screws are engaged in mounting plate.

14. Tighten screws to specification.

TIGHTENING TORQUE	
Moving deck screw	25 N•m ± 3 N•m (18 lbf•ft ± 2 lbf•ft)

15. Close seat.
16. Carefully lower and secure the rear suspension arm to the fixed deck.
    16.1 Position the rear suspension arm brackets in accordance with the reference marks previously drew on fixed deck.

    NOTICE **If no mark was trace, refer to *iS SUSPENSION* subsection for proper procedure to install and align the rear suspension arm.**

    16.2 Install **NEW** screws to secure rear suspension arm brackets.
    16.3 Tighten screws to specification.

TIGHTENING TORQUE	
Rear suspension arm screw	25 N•m ± 3 N•m (18 lbf•ft ± 2 lbf•ft)

17. Remove rear lifting strap.
18. Attach steering cable to steering column.
19. Install gauge support. Refer to *INFORMATION CENTER (GAUGE)* subsection.
20. On aS models, install remote reservoir on moving deck.
21. Install **NEW** front carpets on foot wells and protective caps on moving deck.
22. Check steering alignment then tighten steering clamp bolts. Refer to *STEERING* subsection.

FRONT GRILLE (MODELS WITH SUSPENSION)

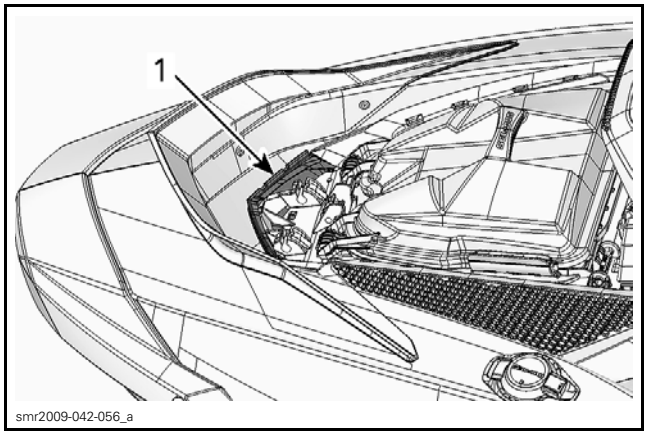

LOCATED UNDER STORAGE COMPARTMENT COVER
1. Front grille

Removing the Front Grille

1. Remove the *STORAGE COMPARTMENT COVER*, see procedure in this subsection.
2. Press on both tabs securing front grille to front body module.

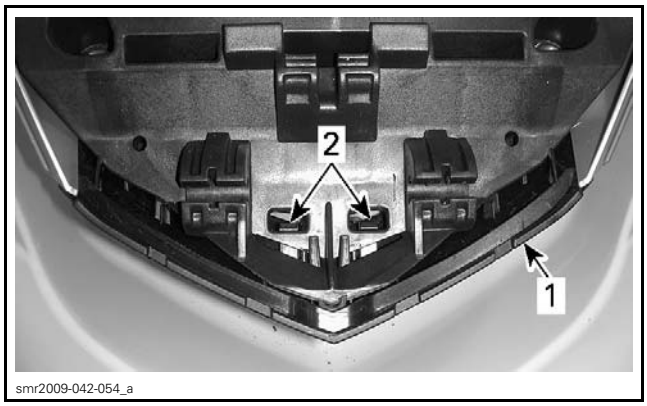

1. Front grille
2. Retaining tabs

3. Remove grille.

Installing the Front Grille

The installation is the reverse of the removal procedure.

SPLASH DEFLECTOR (MODELS WITH SUSPENSION)

Removing the Splash Deflector

sdd2009-001-052_a

1. To remove the splash deflector, drill out the 4 rivets securing the splash deflector to the fixed deck.
2. Pull the deflector from the fixed deck.

NOTICE **A molded location pin at each end of the deflector are each inserted into the fixed deck. Be careful not to break them when removing the deflector.**

Installing the Splash Deflector

1. Position the splash deflector over the forward end of the fixed deck and press the guide pins into the holes provided in the deck.
2. Install four new rivets to secure the deflector to the deck.

REAR VENTILATION BOX (MODELS WITH SUSPENSION)

Removing the Rear Ventilation Box

1. Open seat.
2. Release all retaining latches.

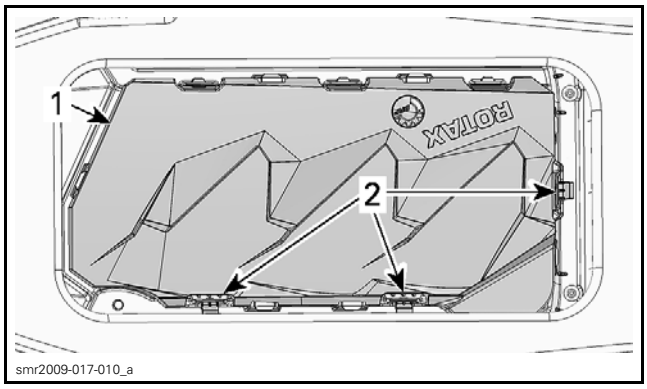

smr2009-017-010_a

1. Ventilation box
2. Retaining latches

3. Remove the ventilation box.

Installing the Rear Ventilation Box

The installation is the reverse of the removal procedure. However, pay attention to the following.

Before installing the ventilation box, check the condition of its seal.

If the seal is damaged, replace the ventilation box as an assembly.

FRONT VENTILATION BOX (MODELS WITH SUSPENSION)

Removing the Front Ventilation Box

1. Open the front storage cover and remove the storage basket.
2. Remove screws securing the ventilation box to fixed deck.

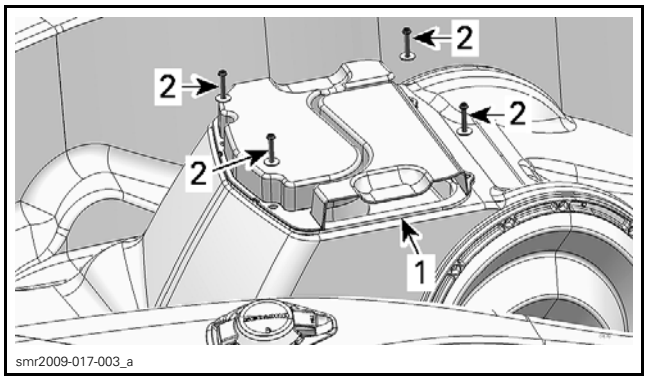

smr2009-017-003_a

1. Front ventilation box
2. Retaining screws

3. Remove the ventilation box.

Installing the Front Ventilation Box

The installation is the reverse of the removal procedure. However, pay attention to the following.

Before installing the ventilation box, check the condition of its seal.

If the seal is damaged, replace the ventilation box.

Tighten ventilation box screws to specification.

TIGHTENING TORQUE	
Ventilation box screw	1.2 N•m ± 0.1 N•m (11 lbf•**in** ± 1 lbf•**in**)

WAKE PYLON (WAKE PRO 215)

Removing the Wake Pylon

Open the seat.

Remove both lateral arms.

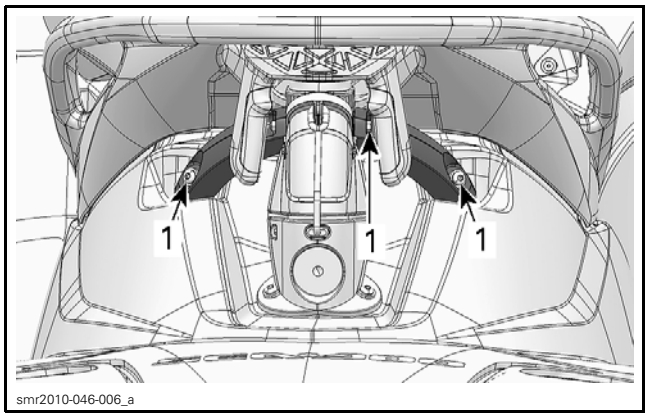

1. Lateral arms screws

Remove bolts and nuts at the bottom of wake pylon.

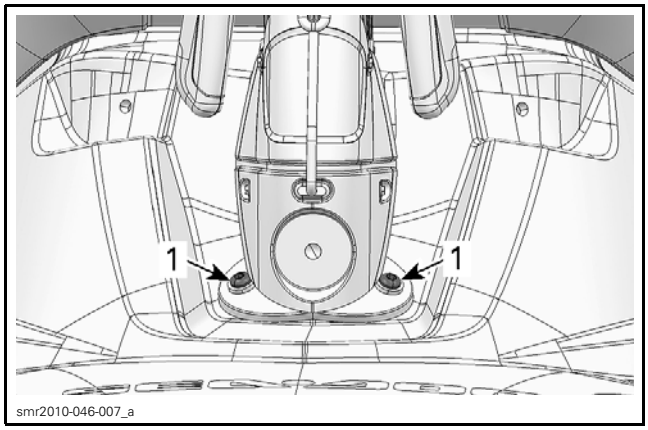

1. Wake pylon bottom bolts

Remove bolts and nuts securing the wake pylon support to body.

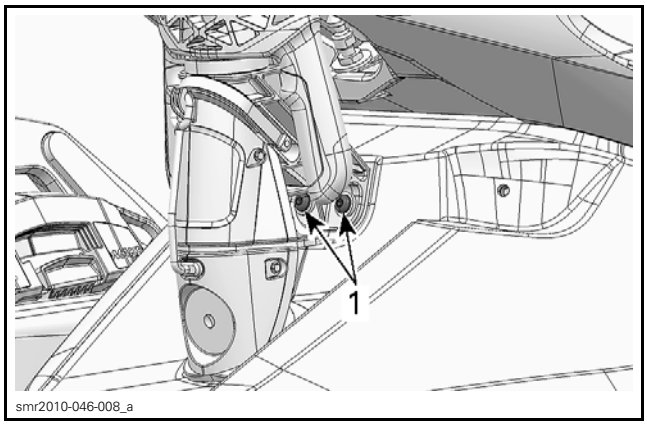

1. Wake pylon support bolts

Lift the wake pylon to disengage its bottom from the body.

Slide the bottom of the wake pylon rearward to remove the wake pylon from vehicle.

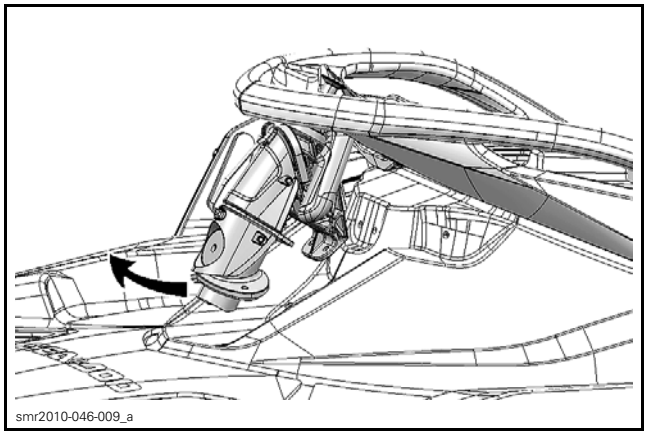

Disassembling the Wake Pylon

Extend the handle completely.

Turn the wake pylon upside down.

Move both ends of locking strap to disengage the inner lock and free the handle.

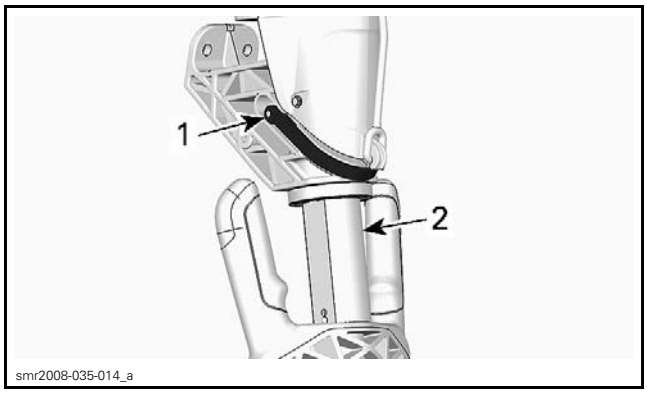

1. Locking strap end
2. Handle stem

Locking Strap

Using a screwdriver or any other suitable tool, detach a side of the locking strap from retaining pin.

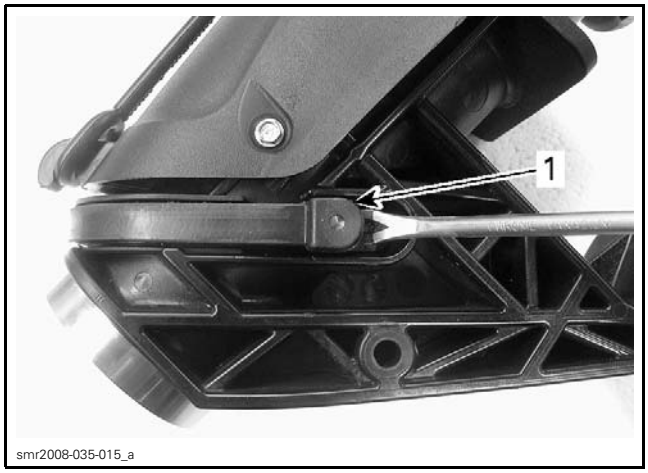

1. Locking strap

Remove locking strap and the inner lock.

Handle

Extend handle approximately 75 mm to 90 mm (3 in to 3-1/2 in).

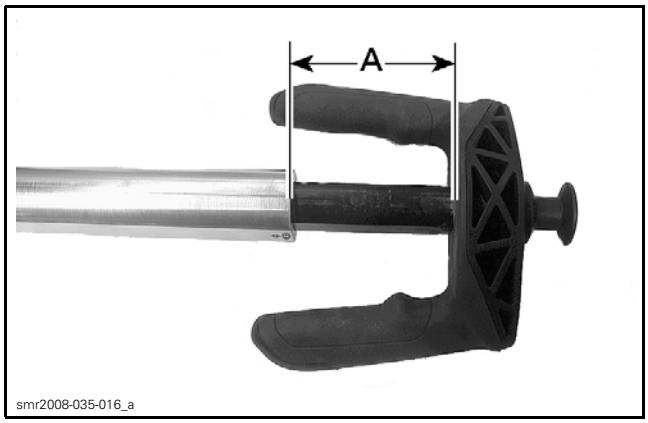

A. 75 mm to 90 mm (3 in to 3-1/2 in)

Insert two thin feeler gauges between handle stem and extension tube.

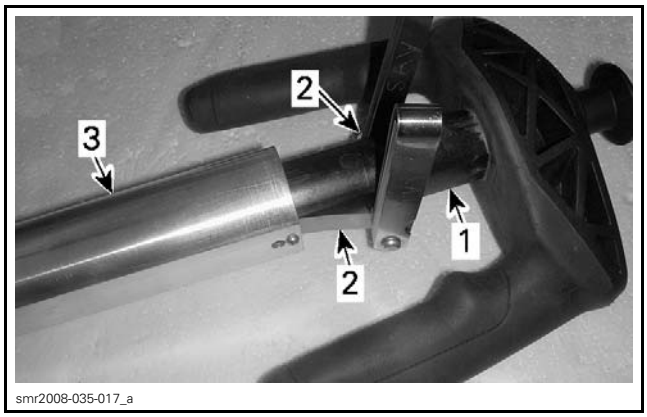

1. Handle stem
2. Feeler gauges
3. Extension tube

Place a rag around the joint to catch balls and spring.

Hold feeler gauges and pull the handle.

Assembling the Wake Pylon

Handle

Install a loose locking tie on handle stem.

Apply XPS SYNTHETIC GREASE (P/N 293 550 010) on each ends of spring.

Insert the spring in the handle stem hole.

Position a ball on each ends of spring.

Install a feeler gauge over each balls.

Tighten the locking tie in order to retain feeler gauges and balls.

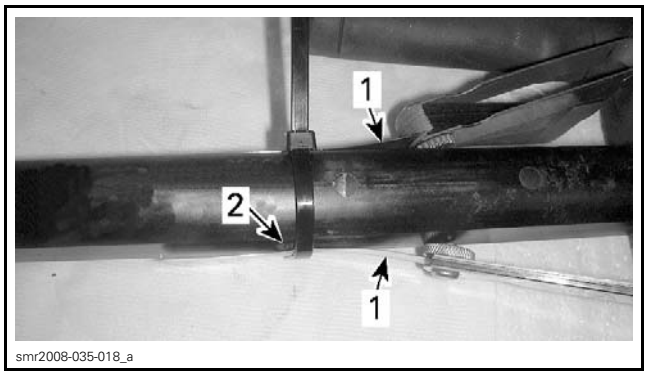

1. Feeler gauges
2. Ball

Apply XPS SYNTHETIC GREASE (P/N 293 550 010) in both recesses of the extension tube.

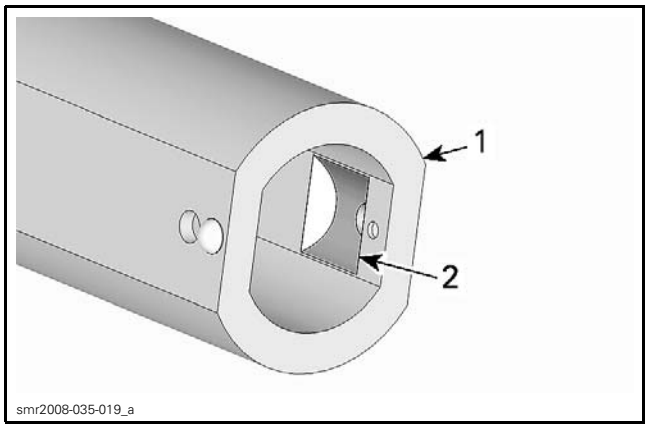

1. *Extension tube*
2. *Recesses*

Slide the handle stem into the extension tube.

Remove feeler gauges and locking tie.

Locking Strap

Remove the wake pylon trim.

1. *Wake pylon trim screws*

Install lock and insert the end of the locking strap over the retaining pin.

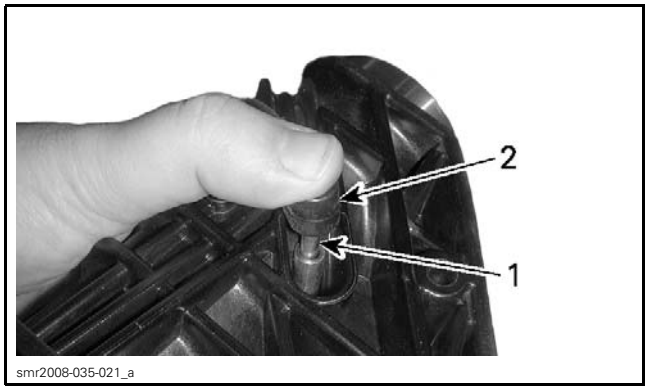

1. *Retaining pin*
2. *Locking strap*

Using a suitable tool, position the locking strap in its groove.

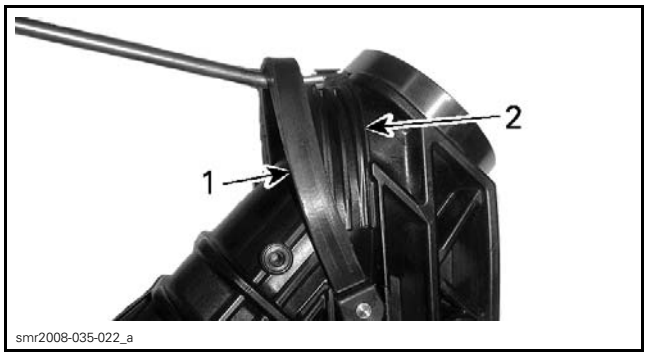

1. *Locking strap*
2. *Locking strap groove*

Reinstall the wake pylon trim.

Do not install the handle into wake pylon yet.

Installing the Wake Pylon

Position the wake pylon on vehicle.

Install and secure wake pylon and lateral arms using previously removed fasteners and new elastic stop nuts.

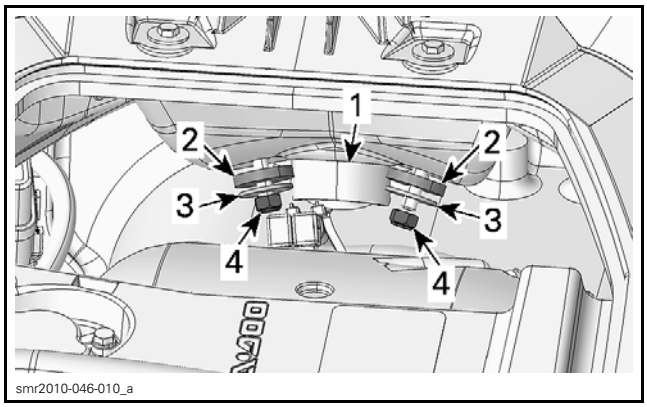

1. *Bottom of wake pylon*
2. *Rubber washers*
3. *Flat washers*
4. *New elastic stop nuts*

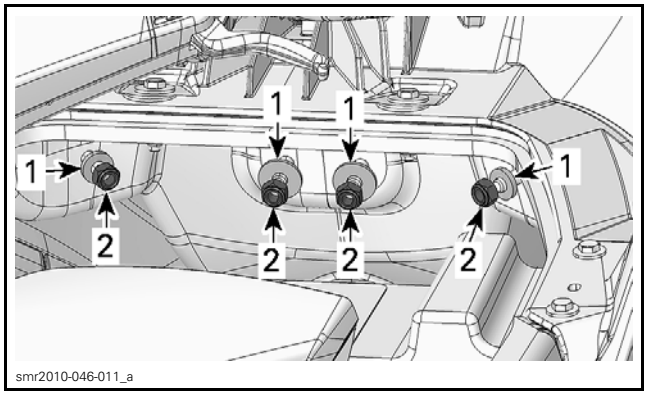

1. *Flat washers*
2. *New elastic stop nuts*

Tighten all nuts by hand.

Ensure base of wake pylon is well leaned against body.

Tighten all nuts to specification as per the following sequence.

TIGHTENING TORQUE	
Nut securing wake pylon to lateral arms	8 N•m ± 1 N•m (71 lbf•**in** ± 9 lbf•**in**)
Lateral arms and wake pylon nuts	11.5 N•m ± 1.5 N•m (102 lbf•**in** ± 13 lbf•**in**)

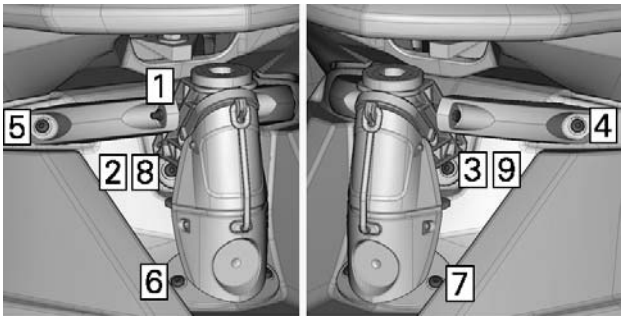

smr2011-039-016_a

TIGHTENING SEQUENCE

Insert the handle into the wake pylon.

Move both ends of the locking strap forward to fully insert the handle.

HULL (GTX_RXT AND WAKE PRO SERIES)

SERVICE PRODUCTS

Description	Part Number	Page
BRP HEAVY DUTY CLEANER	293 110 001	10–12, 15
CLEAR SILICONE SEALANT	296 000 309	13–14, 19
LOCTITE 5900	293 800 066	10–12, 15

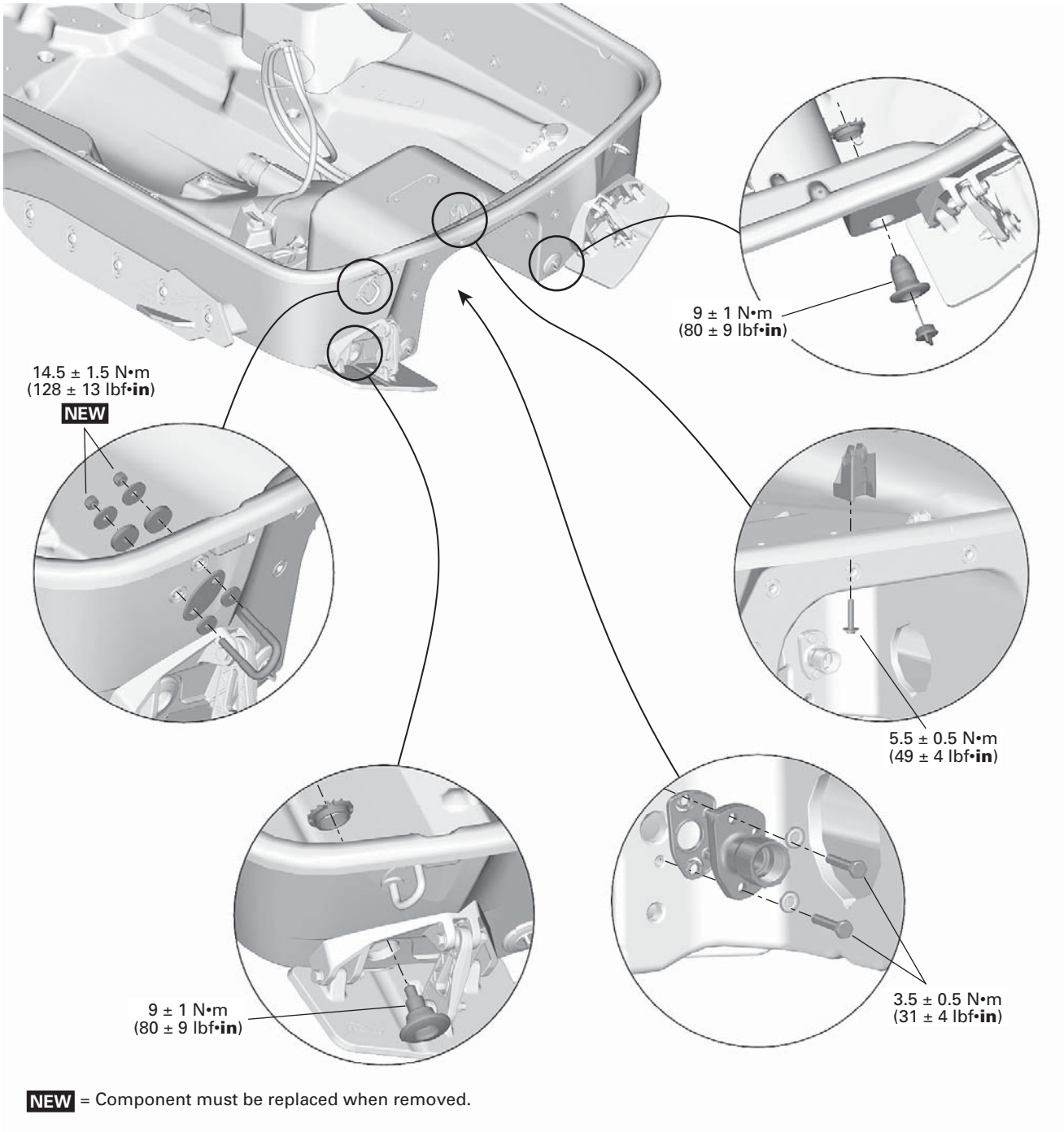

smr2016-041-100_a

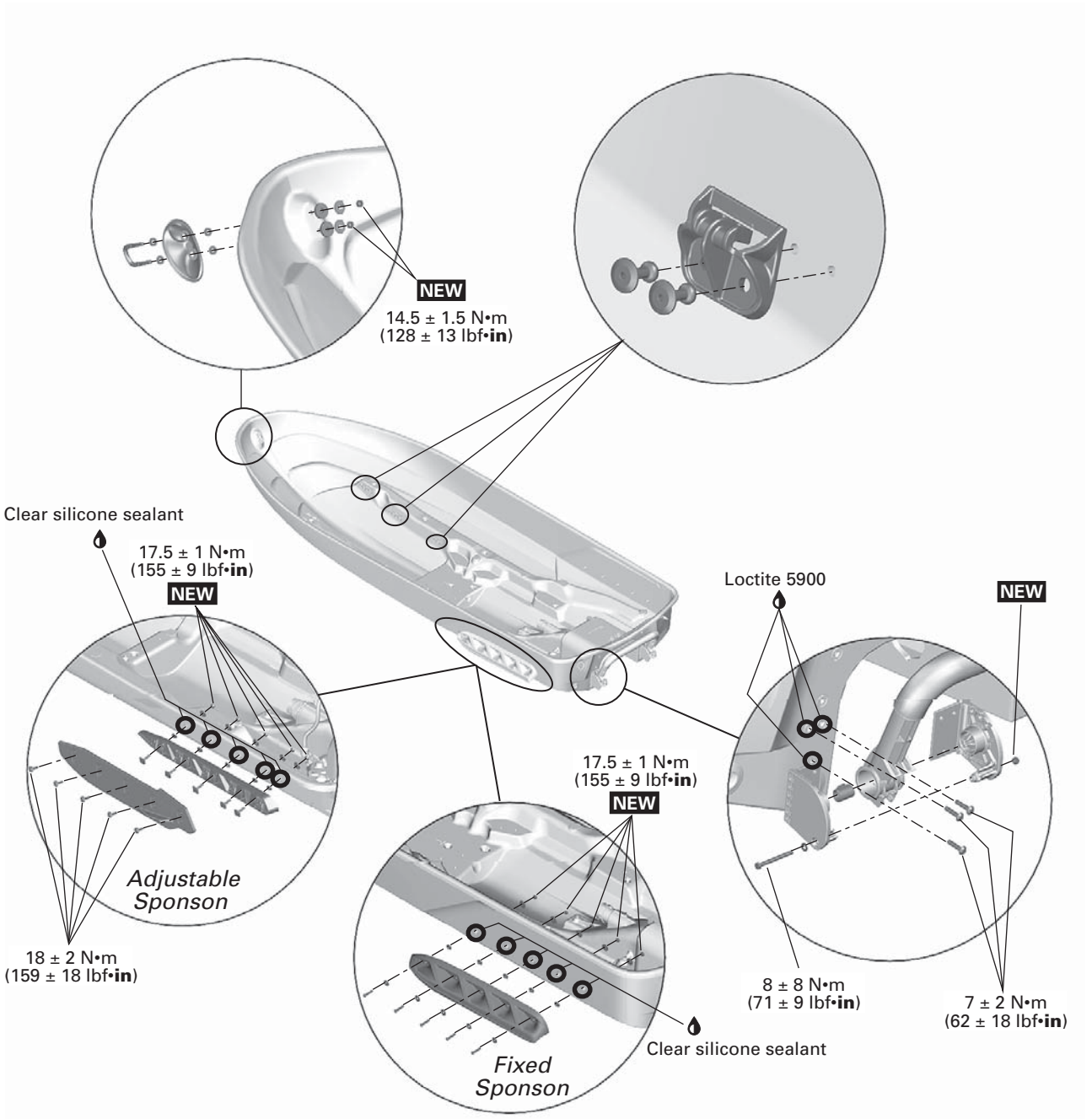

NEW = Component must be replaced when removed.

smr2016-041-101_a

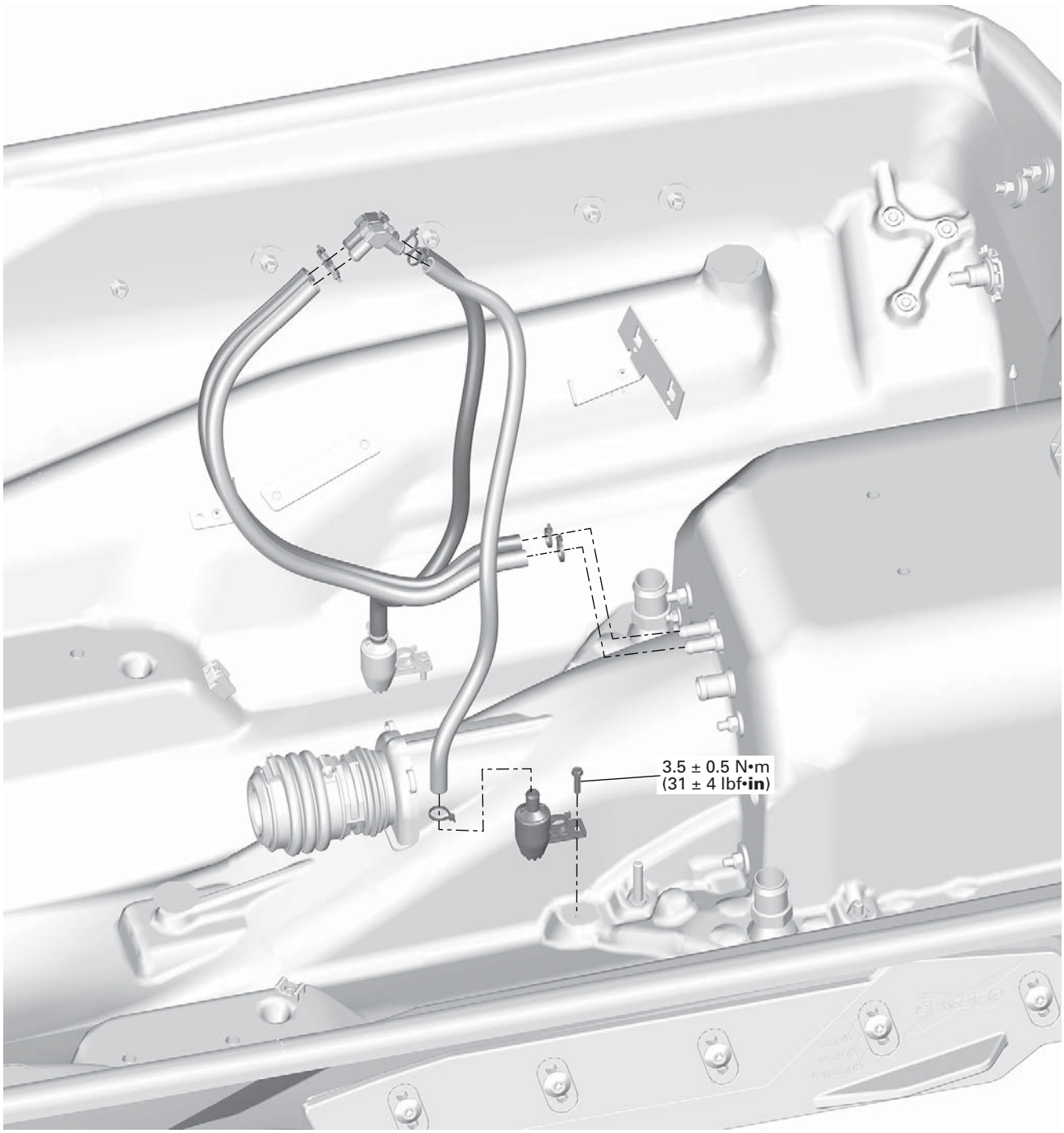

smr2016-042-004_a

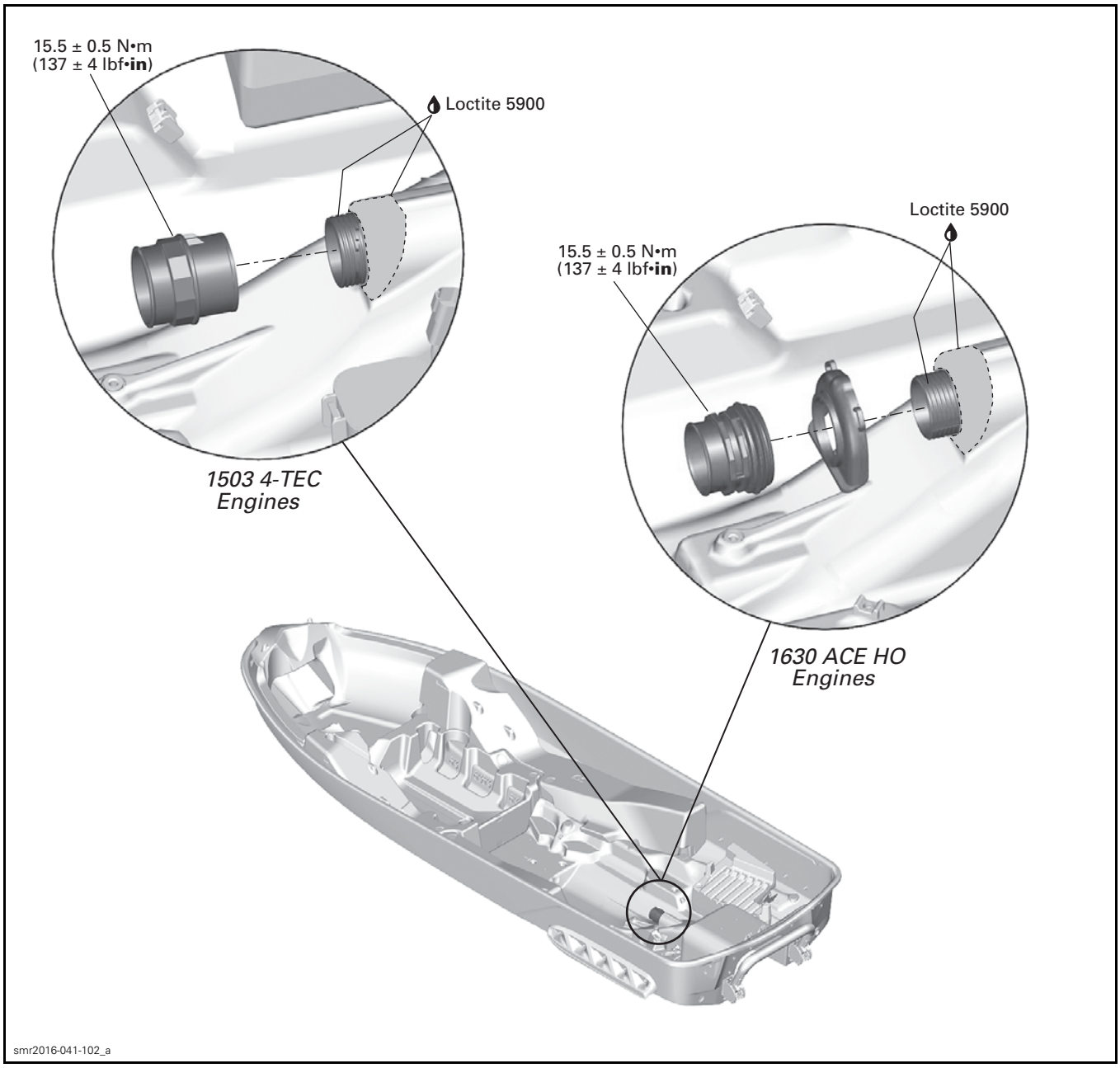
15.5 ± 0.5 N•m
(137 ± 4 lbf•in)
Loctite 5900
1503 4-TEC
Engines
Loctite 5900
15.5 ± 0.5 N•m
(137 ± 4 lbf•in)
1630 ACE HO
Engines
smr2016-041-102_a

RXT-X aS Models

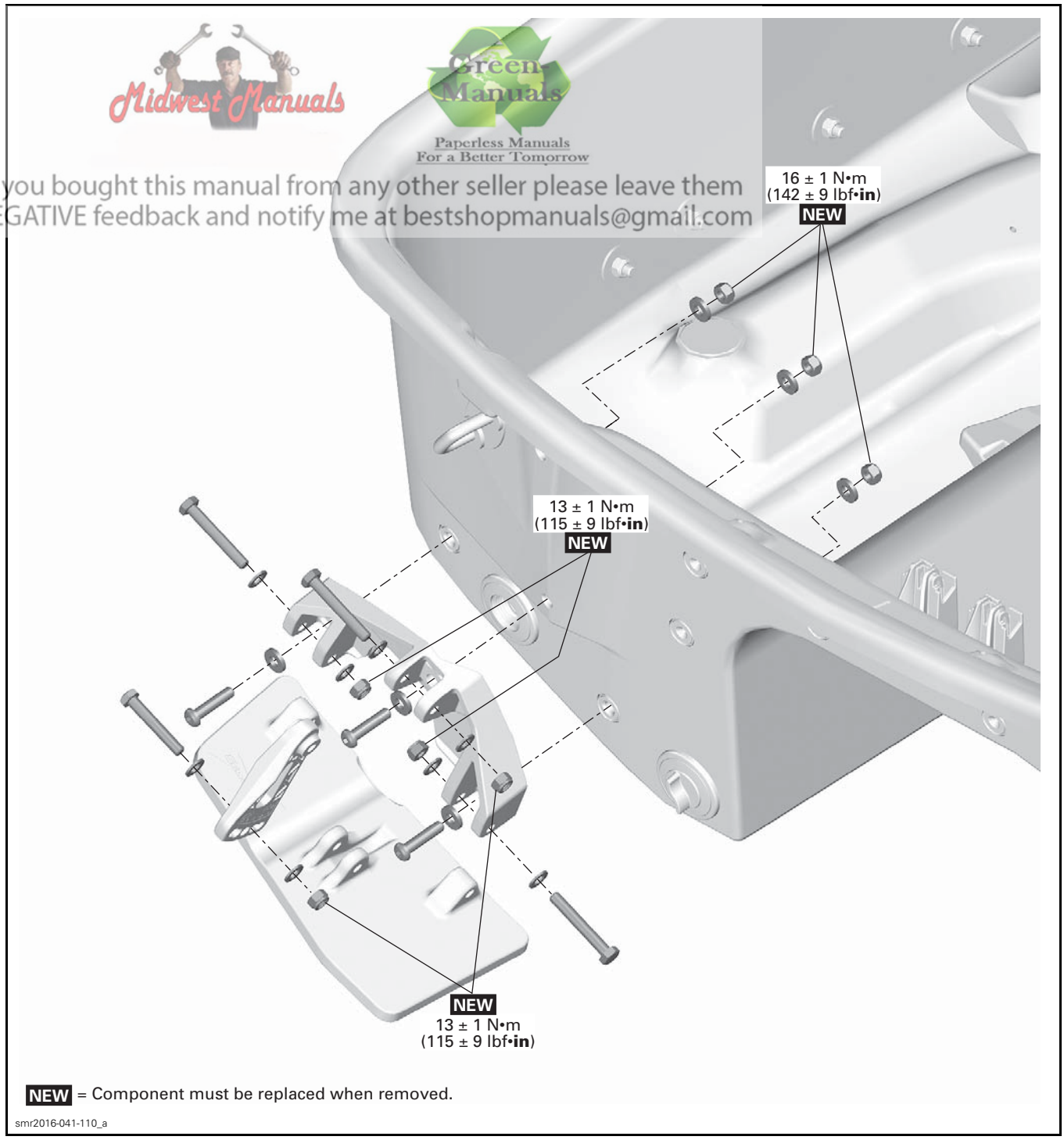

Midwest Manuals
Green Manuals
Paperless Manuals
For a Better Tomorrow
If you bought this manual from any other seller please leave them NEGATIVE feedback and notify me at bestshopmanuals@gmail.com

NEW = Component must be replaced when removed.

smr2016-041-110_a

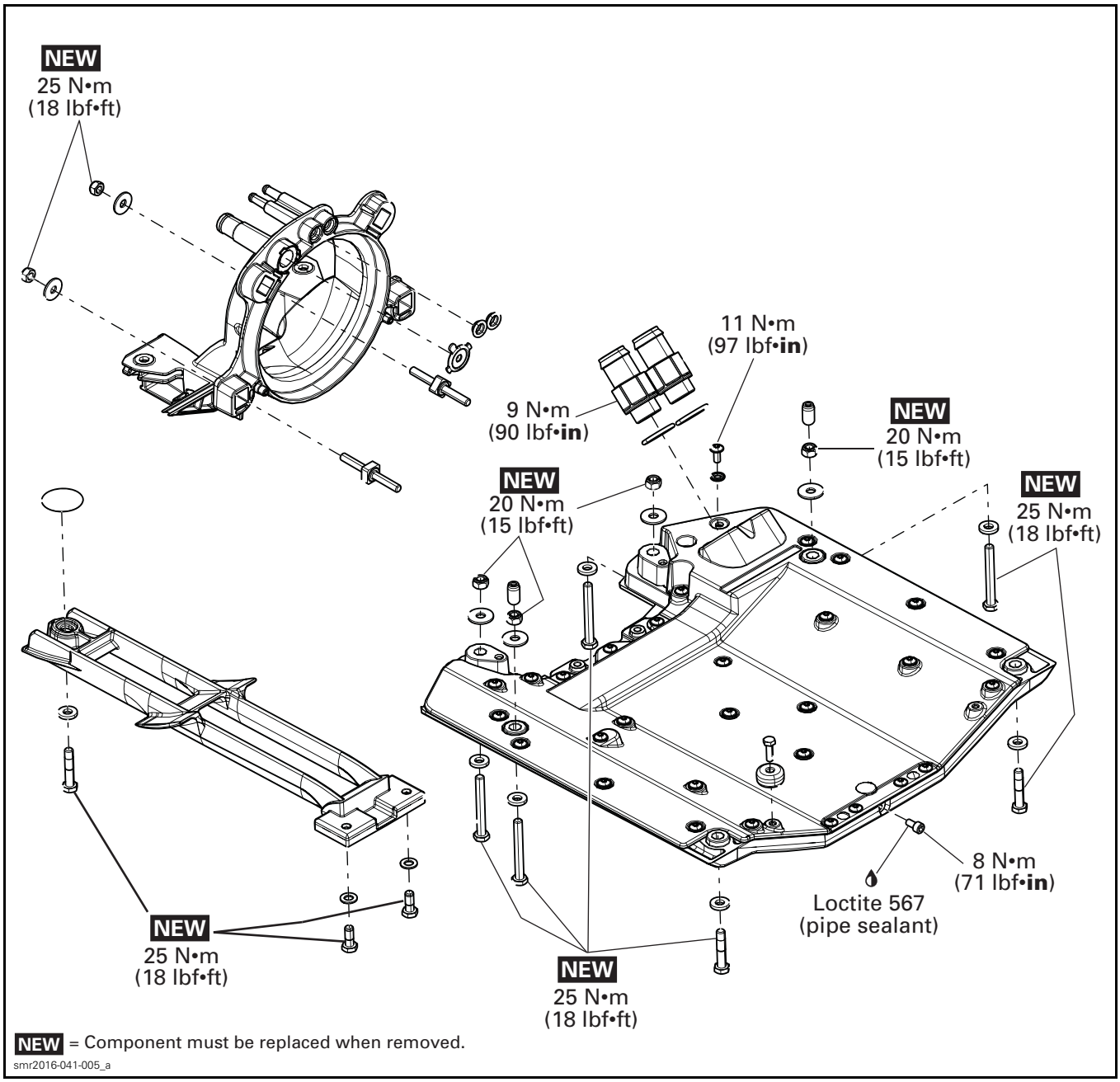
NEW
25 N•m
(18 lbf•ft)
11 N•m
(97 lbf•in)
9 N•m
(90 lbf•in)
NEW
20 N•m
(15 lbf•ft)
NEW
20 N•m
(15 lbf•ft)
NEW
25 N•m
(18 lbf•ft)
8 N•m
(71 lbf•in)
Loctite 567
(pipe sealant)
NEW
25 N•m
(18 lbf•ft)
NEW
25 N•m
(18 lbf•ft)
NEW = Component must be replaced when removed.
smr2016-041-005_a

PROCEDURES

HULL

Hull Repair

The repair procedures of the S³ hull is not the same as a fiberglass composite hull and deck. The standard polyester based fiberglass repair kits **will not work** with this type of hull. The polyester will not adhere to the S³ hull material. Only two-part epoxy repair material should be used.

To repair a S³ hull, the use of an Epoxy repair system, such as the WEST SYSTEM® or an other equivalent epoxy system, is mandatory.

However, the finish on the S³ hull is a polyester based gelcoat with a bonding layer between the hull and the gelcoat. Standard gelcoat refinishing can be performed if the damage is limited to the color surface. If damage requires the removal or the repair to structure material, the epoxy may also be used as a barrier coat before refinishing with gelcoat. Epoxy adheres to S³ hull material, and gelcoat adheres to epoxy.

An epoxy repair kit can be purchased directly from WEST SYSTEM.

Go to **www.westsystem.com**.

On this site you will find complete repair instructions, click on HOW TO USE.

Also training videos, tools and several products are available on the web site.

Consumer Assistance

North and South America
WEST SYSTEM 102 Patterson Ave. P.O. Box 665 Bay City, MI 48707-0665 Phone: 989 684-7286 Toll free: 866 937-8797 Fax: 989 684-1374
Europe, Middle East, Africa and Asia
Wessex Resins and Adhesives Limited, Cupernham House, Cupernham Lane, Romsey, England SO51 7LF Phone: 44-1-794-521-111 Fax: 44-1-794-517-779 E-mail: info@wessex-resins.com
Australia, South Pacific and Asia
ATL Composites, P.O. Box 2349/Southport 4215, Queensland, Australia, Tel.: +61 7-5563-1222, Fax: +61 7-5563-1585 E-mail: info@atlcomposites.com
New Zealand, South Pacific and Asia
Adhesive Technologies Ltd., 17 Corbans Ave./Box 21-169, Henderson, Auckland, New Zealand, Phone: 64-9-838-6961, Fax: 64-9-836-4849 E-mail: enquiries@adhesivetechnologies.co.nz

INLET GRATE

Removing the Inlet Grate

Remove inlet grate retaining screws using an impact tool. Discard screws.

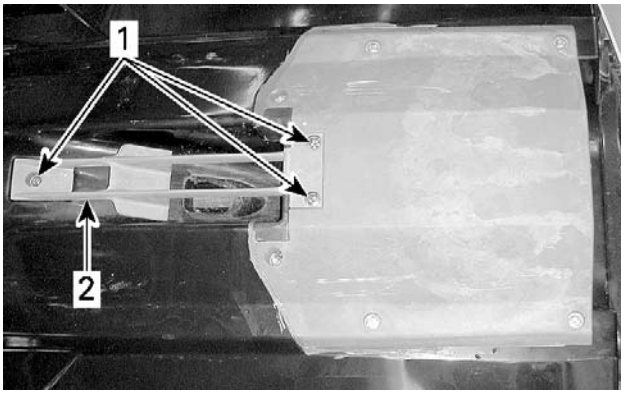

smr2009-043-013_a

TYPICAL
1. *Inlet grate screws*
2. *Inlet grate*

Installing the Inlet Grate

1. Install **NEW** inlet grate retaining screws at the proper location.

INLET GRATE SCREWS	
LOCATION	SCREW SIZE
Front	M8 x 45
Rear	M8 x 20

WEST SYSTEM is a registered trademark of Gougeon Brother, Inc

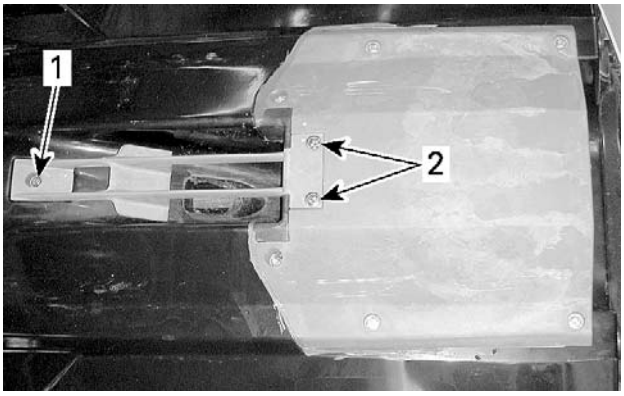

smr2009-043-013_b

SCREW LOCATION
1. *Front*
2. *Rear*

2. Tighten screws to the specified torque and sequence.

TIGHTENING TORQUE		
INLET GRATE SCREWS	First step	Hand tighten
	Second step	25 N•m (18 lbf•ft)

smr2012-045-005_a

TIGHTENING TORQUE SEQUENCE

RIDE PLATE

Removing the Ride Plate

1. Remove inlet grate, see procedure in this subsection.
2. Remove jet pump. Refer to *JET PUMP*.
3. Drain cooling system. Refer to *COOLING SYSTEM*.
4. From inside the hull, disconnect coolant hoses from the ride plate.
5. Remove coolant hose fittings from the ride plate.

NOTICE **If possible, remove the hose fittings from the ride plate before removing the ride plate. If fittings cannot be removed, proceed with care when removing the ride plate.**

6. Heat ride plate retaining screws using a heat gun.
7. Using an impact tool, remove and discard retaining screws.

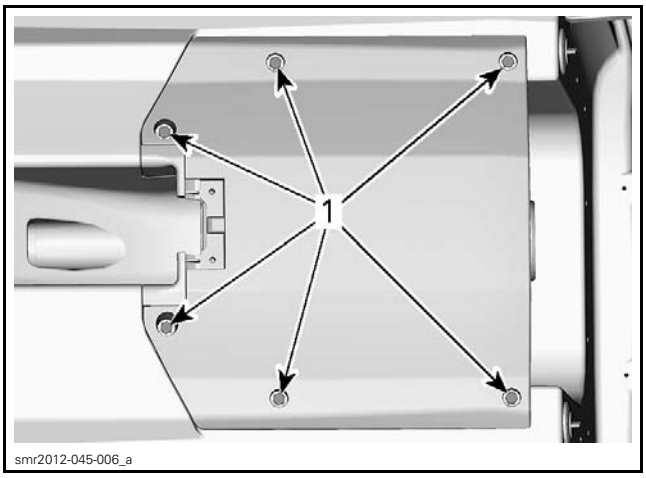

smr2012-045-006_a

TYPICAL
1. *Ride plate retaining screws*

8. Install a low height hydraulic bottle jack and 2 steel plates between ride plate and hull as per following illustration.

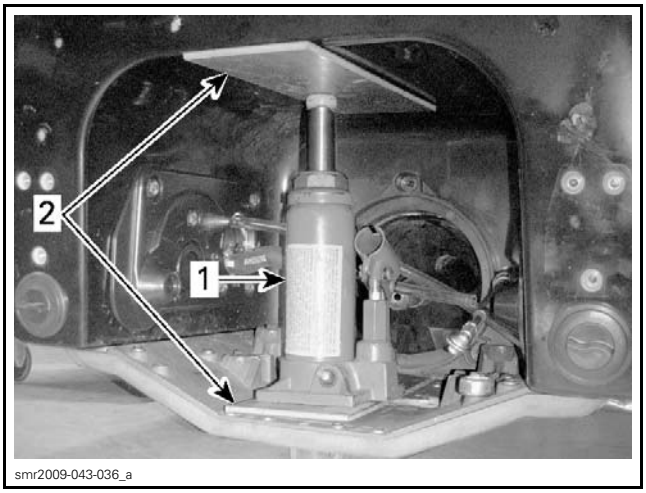

smr2009-043-036_a

TYPICAL
1. *Hydraulic bottle jack*
2. *Steel plates*

9. Heat the edge of the ride plate with a heat gun to soften the sealant.
10. Start pumping the hydraulic jack slowly.
11. Using a sharp knife, carefully cut the sealant around the ride plate edges.

12. Pump the hydraulic jack slowly to pry the ride plate from the hull.

Cleaning the Ride Plate

1. Carefully scrape off all excess sealant from ride plate and hull.
2. Clean hull surface with BRP HEAVY DUTY CLEANER (P/N 293 110 001) to eliminate grease, dust and sealant residue. Clean fitting threads.

Installing the Ride Plate

1. Install both hose fittings on the ride plate. Tighten to the specified torque.

NOTE: Replace O-rings if necessary.

TIGHTENING TORQUE	
Hose fittings	9 N•m (80 lbf•**in**)

2. Apply LOCTITE 5900 (P/N 293 800 066) sealant as illustrated.

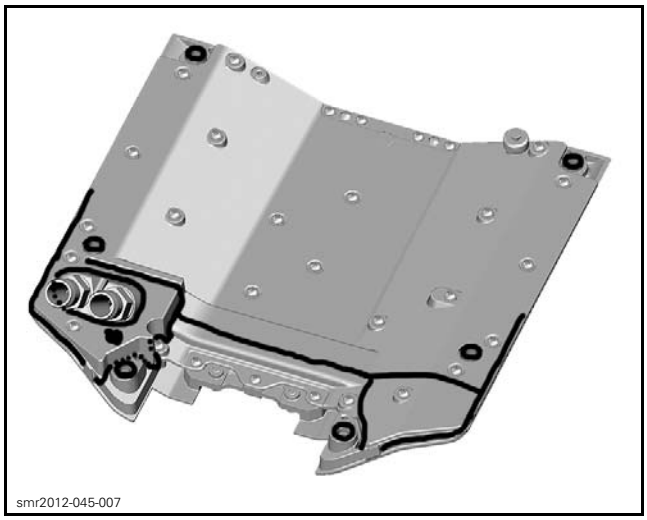

SEALANT APPLICATION

3. Position ride plate on hull and thread NEW screws 5 turns by hand.
4. Position inlet grate and thread NEW screws 5 turns by hand. Refer to *INLET GRATE* in this subsection.
5. Tighten screws to the specified torque and sequence.

TIGHTENING TORQUE		
RIDE PLATE RETAINING SCREWS	First step	Hand tighten
	Second step	25 N•m (18 lbf•ft)

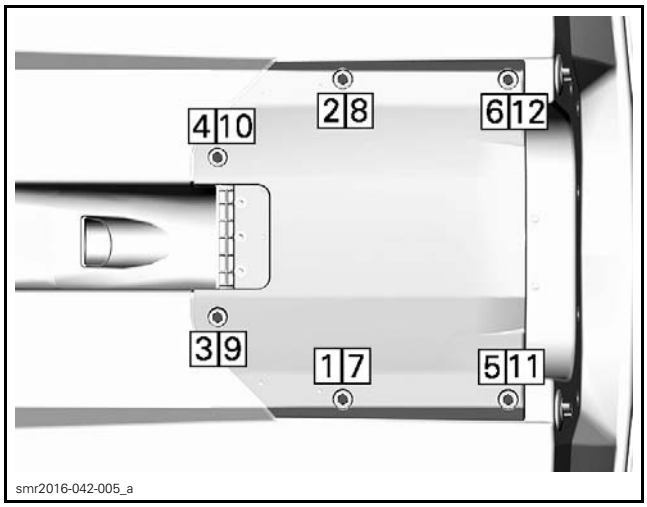

RIDE PLATE TIGHTENING SEQUENCE

6. Tighten inlet grate screws to the specified torque and sequence, refer to *INSTALLING THE INLET GRATE* in this subsection.
7. Reinstall coolant hoses on ride plate fittings.

NOTICE **Make sure the coolant hose clamp screws do not rub on any component.**

TIGHTENING TORQUE	
Coolant hose clamps	4 N•m (35 lbf•**in**)

8. Install jet pump, refer to the *JET PUMP* subsection.
9. Install iBR gate and VTS trim ring, refer to the *iBR AND VTS* subsection.
10. Install a piece of hose over the threaded end of the front ride plate screws.

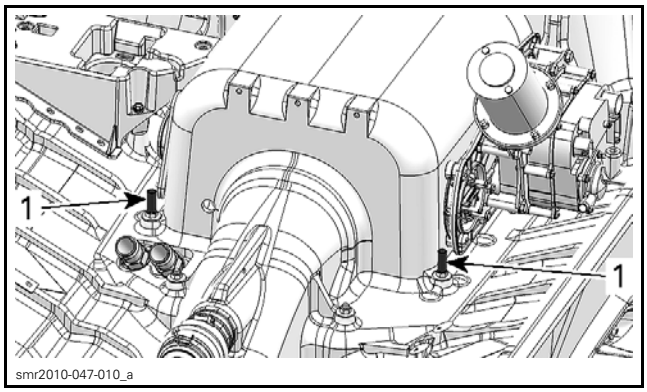

TYPICAL
1. Hoses

11. Install battery and electrical accessories support, refer to *CHARGING SYSTEM* subsection.
12. Fill and bleed cooling system and carry out a leak test. Refer to *COOLING SYSTEM* subsection.

13. Install all remaining parts. Refer to the applicable procedures.

JET PUMP SUPPORT

Removing the Jet Pump Support

1. Remove the following parts:
   – Jet pump (refer to *JET PUMP* subsection)
   – Drive shaft (refer to *DRIVE SHAFT* subsection)
   – Ride plate (refer to *RIDE PLATE* in this subsection.
2. Disconnect hoses from jet pump support.

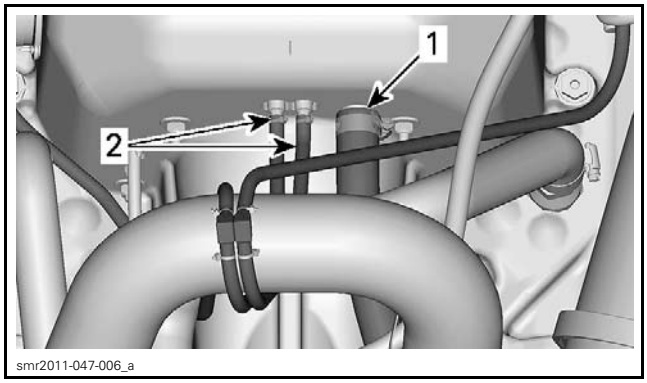

INSIDE THE HULL
1. Exhaust water supply hose
2. Bailer hoses

3. Remove jet pump support retaining nuts and washers.

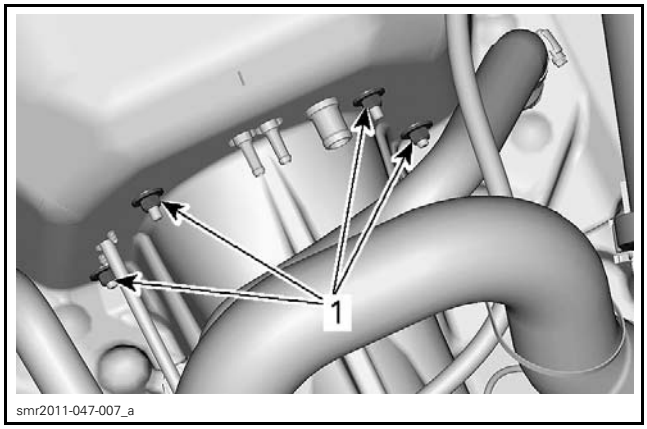

INSIDE THE HULL
1. Jet pump support retaining nuts

4. Heat the jet pump support using a heat gun in order to soften the sealant.
5. Pull jet pump support off the hull.
6. Note the alignment shims location.

NOTICE **Alignment shims have to be reinstalled at the same location.**

Cleaning the Jet Pump Support

1. Scrape off all excess sealant from jet pump support, ride plate, and hull.
2. Inspect pump support for cracks or other damage.
3. Clean jet pump support and hull surface with BRP HEAVY DUTY CLEANER (P/N 293 110 001) to eliminate grease, dust, and sealant residue.

Installing the Jet Pump Support

1. Make sure sealant contact areas are clean and dry.
2. Apply LOCTITE 5900 (P/N 293 800 066) on the jet pump support as shown (thick black line).

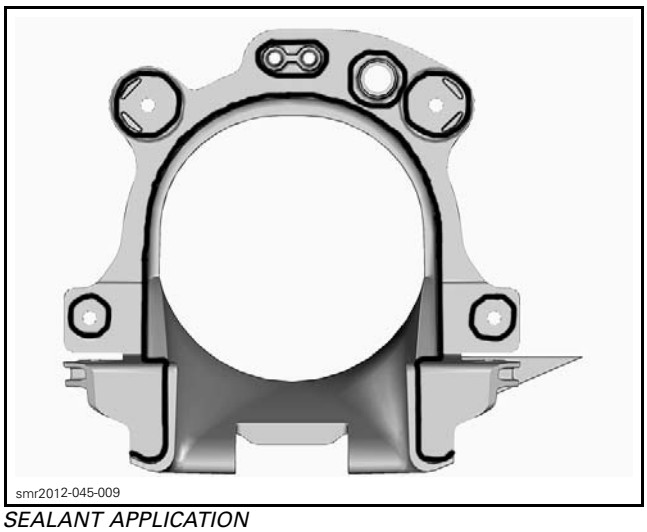

SEALANT APPLICATION

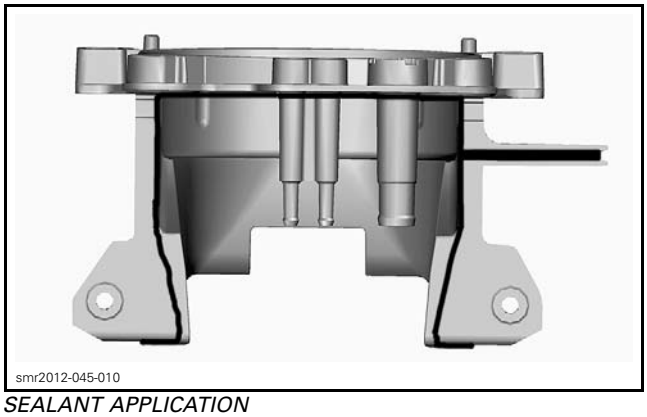

SEALANT APPLICATION

3. Insert the studs in the jet pump support square holes.
4. Slide the alignment shims on the studs.
5. Position the jet pump support against the hull.
6. Inside the hull, thread all 4 retaining nuts.
7. Tighten retaining nuts to the specified torque and sequence.

TIGHTENING TORQUE	
Jet pump support retaining nuts	25 N•m (18 lbf•ft)

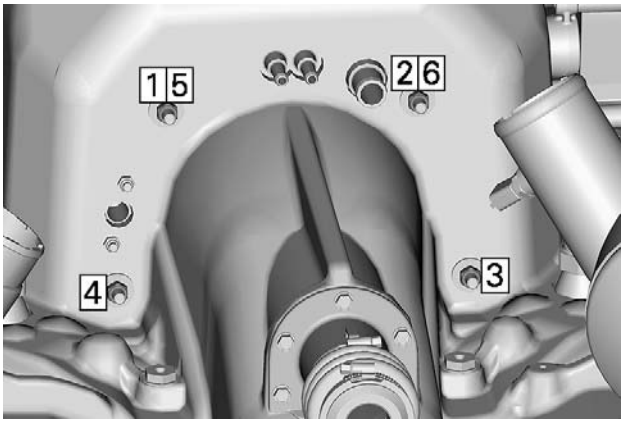

smr2012-044-004_a

JET PUMP SUPPORT TIGHTENING SEQUENCE

8. Remove excess sealant.
9. Reinstall other removed parts. Refer to appropriate subsections for procedures.

THRU-HULL FITTING

Removing the Thru-Hull Fitting

1. Remove drive shaft, refer to *DRIVE SHAFT* subsection.
2. Heat the thru-hull fitting nut with a heat gun to soften the sealer.
3. Unscrew the thru-hull fitting nut and remove the spacer.
4. From underneath of the vehicle, heat the thru-hull fitting with a heat gun to soften the sealer.
5. Pull thru-hull fitting off the hull.

Cleaning the Thru-Hull Fitting Area

1. Scrape off all excess sealant from the hull.
2. Clean hull surface with BRP HEAVY DUTY CLEANER (P/N 293 110 001) to eliminate grease, dust, and sealant residue.

NOTE: Use only a clean, dry, oil free filtered air supply for dusting and drying parts or hull.

Installing the Thru-Hull Fitting

1. Make sure thru-hull fitting sealing surface is free of sealant residue, clean and dry before installation.
2. Apply LOCTITE 5900 (P/N 293 800 066) sealant all around on shaded surface.

smr2016-041-104_a

SEALANT APPLICATION

3. Tighten nut to the specified torque.

TIGHTENING TORQUE	
Thru-hull fitting nut	15.5 N•m ± 0.5 N•m (137 lbf•**in** ± 4 lbf•**in**)

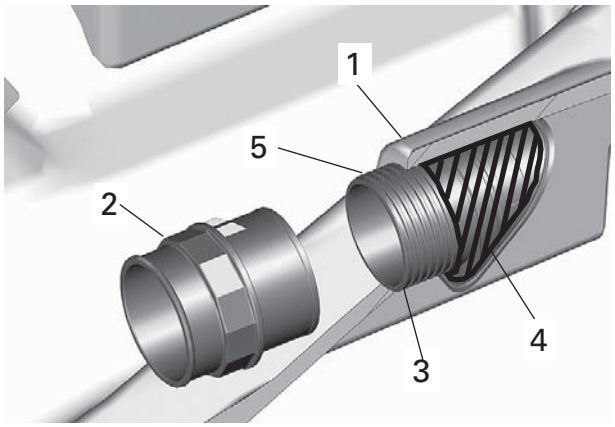

smr2016-041-103_a

1. *Hull (cut for clarity purpose*
2. *Inner thru-hull fitting*
3. *Exterior thru-hull fitting*
4. *Sealant on exterior thru-hull fitting*
5. *Sealant over the threads*

4. Install other removed parts, refer to the appropriate subsections.

BOW STABILIZER (RXT-X aS SERIES)

Removing the Bow Stabilizer

Remove retaining screws.

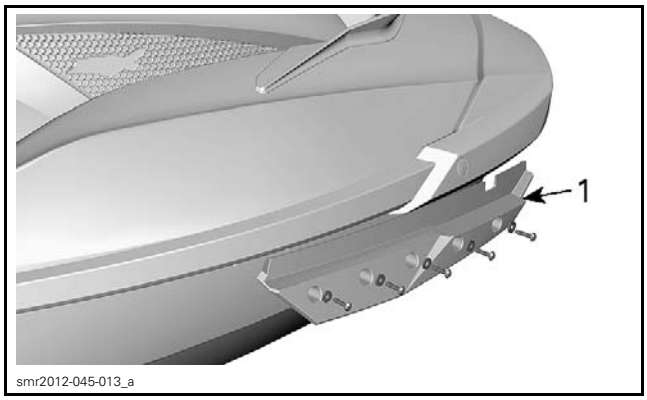

1. *LH bow stabilizer*

Installing the Bow Stabilizer

The installation is the reverse of the removal procedure.

TIGHTENING TORQUE	
Bow stabilizer screws	7 N•m ± 2 N•m (62 lbf•**in** ± 18 lbf•**in**)

FIXED REAR SPONSONS

NOTE: Removal and installation procedure for RH and LH sponson is similar.

Removing the Fixed Rear Sponson

On models with a 1503 4-TEC engine, remove the muffler (on LH side) or the resonator (on RH side). Refer to the *EXHAUST SYSTEM* subsection.

On models with a 1630 ACE HO engine, remove the intercooler (on RH side) or the muffler (on LH side). Refer to *INTERCOOLER* or *EXHAUST SYSTEM* subsection.

From inside hull, hold sponson nuts while removing sponson retaining bolts and washers.

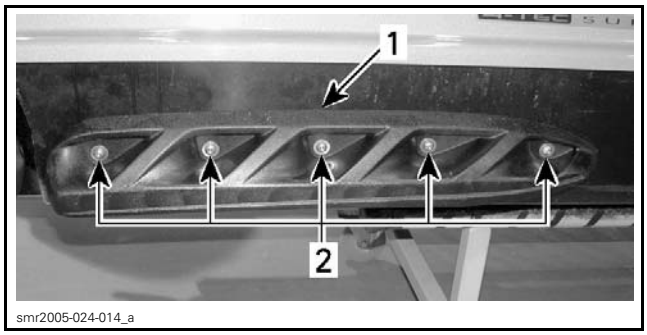

TYPICAL – RH SPONSON SHOWN
1. *Sponson*
2. *Retaining bolts*

Installing the Fixed Rear Sponson

1. Clean any residues of silicone sealant on hull and sponsons.
2. Apply CLEAR SILICONE SEALANT (P/N 296 000 309) on back side of sponson spacers.

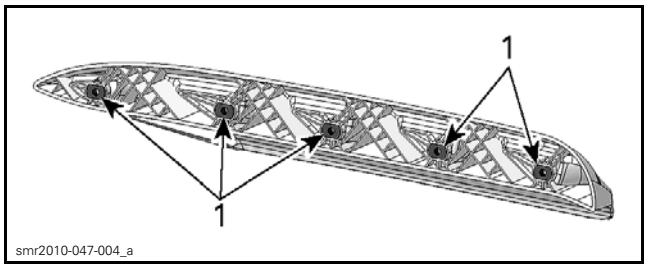

1. *Apply silicone sealant here*

3. Apply a small amount of CLEAR SILICONE SEALANT (P/N 296 000 309) into each hull hole.

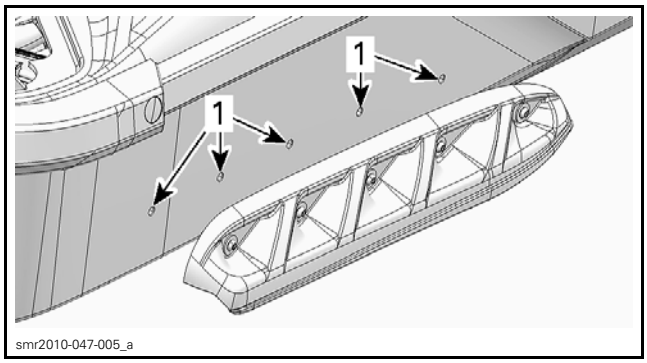

1. *Apply silicone sealant in these holes*

4. Insert a bolt with washer through each hole and install the sponson against the hull.
5. From inside hull, secure each bolt with a washer and a NEW elastic stop nut.
6. Tighten nuts as specified.

TIGHTENING TORQUE	
Sponson retaining nuts	17.5 N•m ± 1 N•m (155 lbf•**in** ± 9 lbf•**in**)

7. Reinstall muffler or resonator. Refer to *EXHAUST SYSTEM* for the procedure.

ADJUSTABLE REAR SPONSONS (RXT-X SERIES)

NOTE: The following procedures apply for RH and LH sides.

Removing the Adjustable Rear Sponson

Remove and discard all screws securing adjustable sponsons.

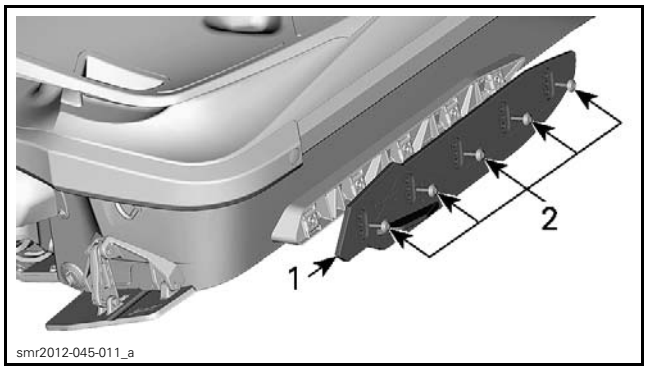

1. *Adjustable sponson*
2. *Retaining screws*

Installing the Adjustable Rear Sponson

⚠ WARNING

Both sponsons must be installed and adjusted at the same height. Missing sponsons or improper adjustment will affect handling and stability, which could cause a loss of control of the watercraft.

TIGHTENING TORQUE	
Sponson retaining screws	18 N•m ± 2 N•m (159 lbf•**in** ± 18 lbf•**in**)

ADJUSTABLE SPONSON SUPPORTS (RXT-X SERIES)

NOTE: Removal and installation procedure for RH and LH sponson is similar.

Removing the Adjustable Sponson Support

Remove the *ADJUSTABLE SPONSON*, see procedure in this subsection.

Remove the required parts:

– Muffler (on LH side)
– Resonator (on RH side - 1503 4-TEC engine)
– Intercooler (on RH side - 1630 ACE HO engine).

From inside hull, remove nuts and washers retaining the adjustable sponson support.

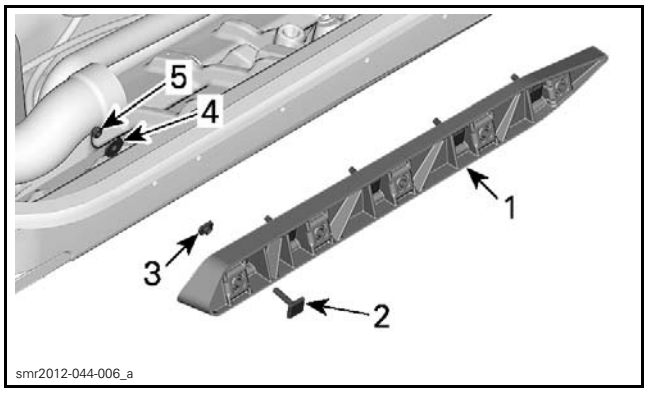

BODY NOT SHOWN FOR CLARITY PURPOSE
1. *Sponson support*
2. *Square head stud*
3. *Push nut*
4. *Washer*
5. *Elastic stop nut*

Installing the Adjustable Sponson Support

The installation is the reverse of the removal procedure. However, pay attention to the following.

REQUIRED PRODUCT	LOCATION
CLEAR SILICONE SEALANT (P/N 296 000 309)	Around each hole of sponson support

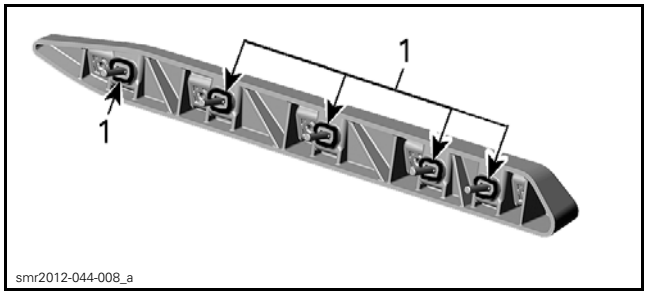

1. *Apply silicon sealant here*

TIGHTENING TORQUE	
Sponson support nuts (NEW)	17.5 N•m ± 1 N•m (155 lbf•**in** ± 9 lbf•**in**)

Reinstall adjustable sponson as described in *INSTALLING THE ADJUSTABLE SPONSON*.

ADJUSTABLE TRIM TABS (RXT-X aS MODEL)

NOTE: The following procedures apply for RH and LH sides.

Removing the Adjustable Trim Tab

1. Remove fasteners retaining trim tab and link rod to trim tab support.

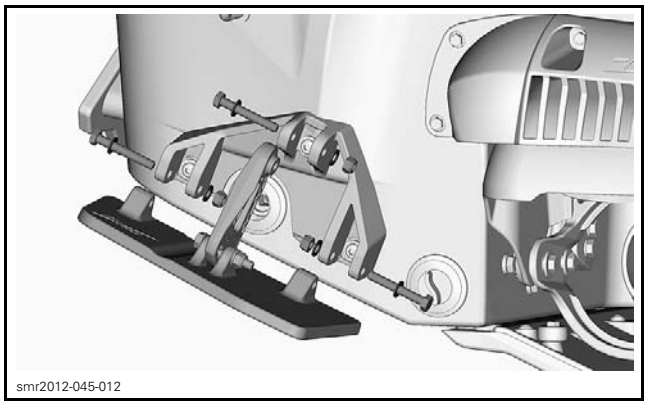
smr2012-045-012

2. Before removing trim tab support, trace line on hull around support to ensure alignment when reinstalling the support.
3. Remove trim tab support from hull.
4. Clean any residues of silicone sealant on hull and inside hull holes.

REQUIRED PRODUCT
BRP HEAVY DUTY CLEANER (P/N 293 110 001)

Installing the Adjustable Trim Tab

NOTICE **Do not use pneumatic or electrical tools when stainless steel fasteners are used as seizure may occur.**

1. Apply sealant in each hull holes.

REQUIRED PRODUCT
LOCTITE 5900 (P/N 293 800 066)

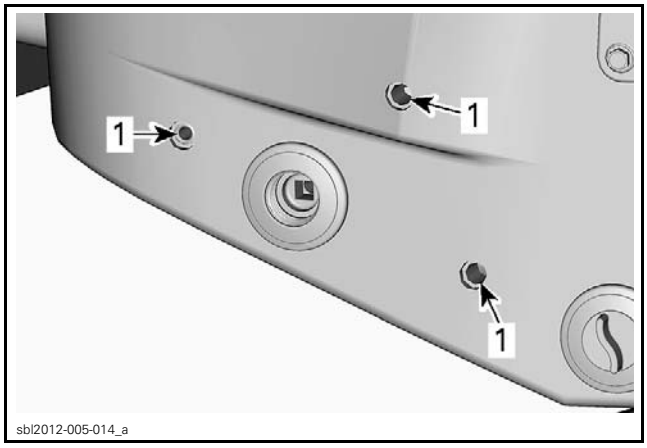

sbl2012-005-014_a

1. Apply sealant in these holes

2. Install the trim tab support using previously drawn marks.

TIGHTENING TORQUE	
Trim tab support screws	16 N•m (142 lbf•**in**)

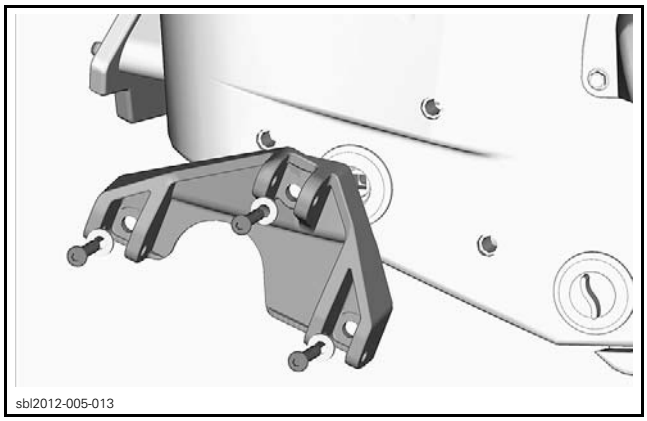
sbl2012-005-013

3. Install the link rod in the upper bracket of the support, as shown.

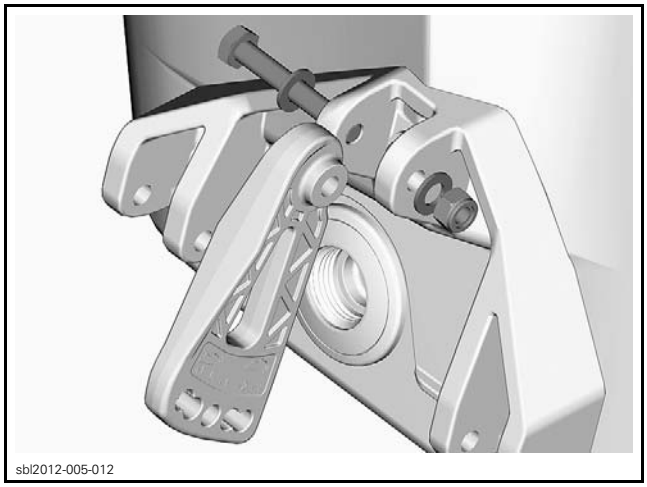
sbl2012-005-012

TIGHTENING TORQUE	
Link rod upper retaining nut	13 N•m (115 lbf•**in**)

4. Secure trim tab to support as shown.

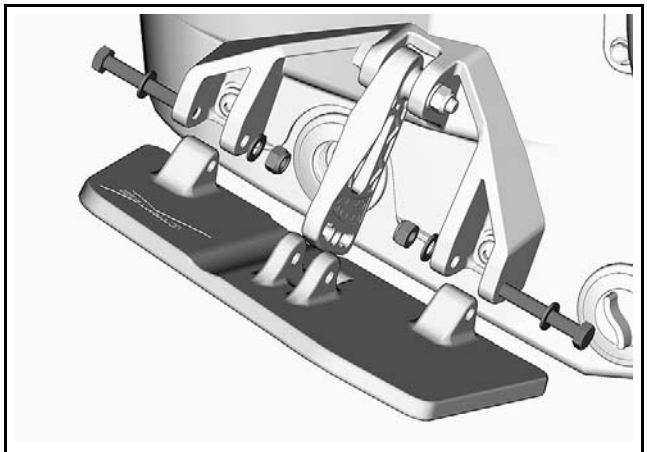
sbl2012-005-009

TIGHTENING TORQUE	
Trim tab retaining nuts	13 N•m (115 lbf•**in**)

5. Secure the bottom of the link rod. Position the link rod to the 0 (zero) position (factory setting).

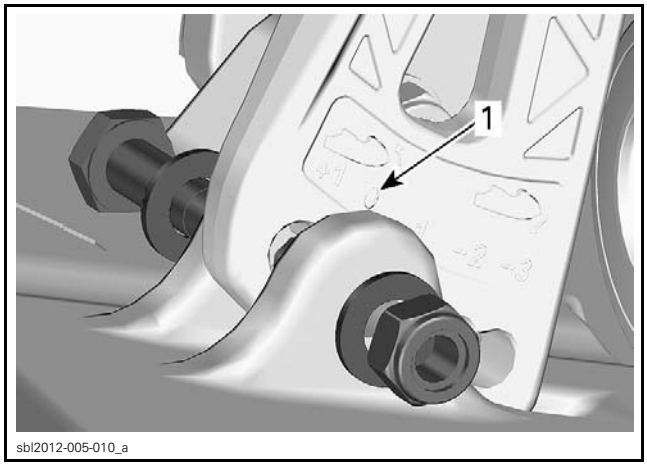

1. 0 (zero) position (factory setting)

NOTE: Make sure to place the bolt head toward outside of watercraft.

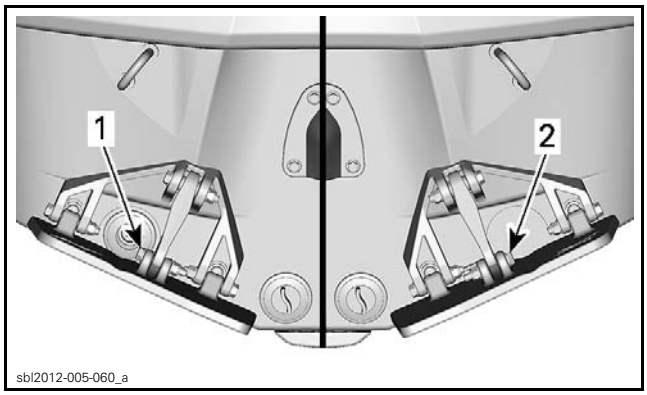

1. Bolt head here – left link rod
2. Bolt head here – right link rod

TIGHTENING TORQUE	
Link rod lower retaining nut	13 N•m (115 lbf•**in**)

BAILERS

Two bailer pick ups (one each side), serve to drain the bilge of the watercraft when it is in operation.

The bailer pick ups are connected through a hose system to two syphon tubes mounted in the jet pump venturi that draw the water out of the bilge through the bailer pick ups. The bailers are also connected to the bilge drain plugs in the stern.

Bailer Pick-Up Access

Models with Suspension

Open the boarding platform.

Remove the storage bins.

Inspecting the Bailer Pick-Up

1. Inside hull, check holes in the bailer pick-ups to see if they are obstructed. Clean if necessary.
2. Check if the hole on each bailer hose elbow fitting is obstructed. Clean both elbow fittings if necessary.

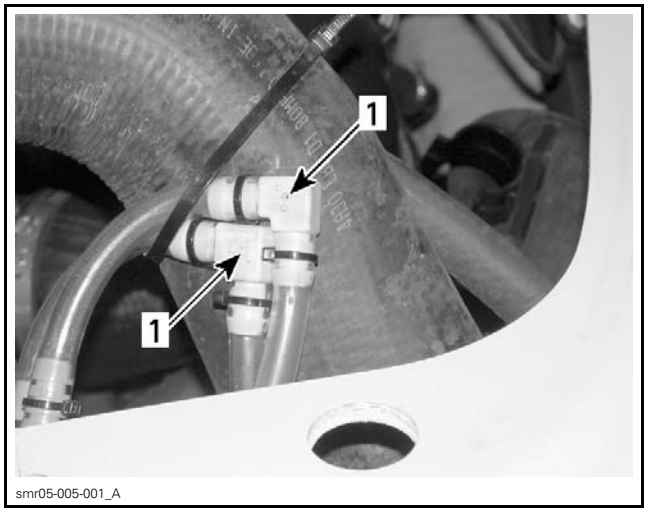

1. Elbow fitting holes

NOTE: When repositioning the bailer hose elbows, attach them at the highest position that you can on the exhaust hose.

DRAIN PLUGS

Drain Plug Access

Models with Suspension

Open the boarding platform.

Remove the appropriate storage bin.

1503 4-TEC Engine

To reach the RH drain plug, remove the muffler.

For the LH drain plug, remove the resonator.

1630 ACE HO Engine

To reach the RH drain plug, remove the muffler and the resonator.

For the LH drain plug, remove the intercooler and the resonator.

Drain Plug Neck Removal

Remove the required parts:
- Muffler (on LH side)
- Resonator (on RH side - 1503 4-TEC engine)
- Intercooler (on RH side - 1630 ACE HO engine).

1. Unscrew the drain plug from the drain neck and pull the drain plug out of the neck.

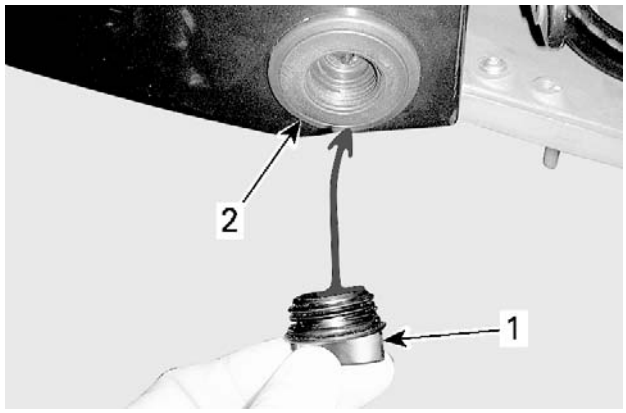

smr2009-043-032_a

DRAIN PLUG REMOVAL
1. Drain plug
2. Drain neck

2. Inside hull, hold the drain neck nut using adjustable pliers.
3. Using a ratchet handle and extension of appropriate size, unscrew the drain neck from the hull.

smr2009-043-033

DRAIN NECK REMOVAL

Installing the Drain Plug Neck

1. Install drain neck and torque to specification.

TIGHTENING TORQUE	
Drain plug neck	9 N•m ± 1 N•m (80 lbf•**in** ± 9 lbf•**in**)

2. Secure bailer hose to drain neck using a NEW locking tie.
3. Reinstall all removed parts in the reverse order of removal.

BOW EYELET

Removing the Bow Eyelet

Models with Suspension

To remove the retaining nuts on the bow mooring eyelet, an access hole must be cut in the neoprene sealing pad. Carry out the following steps.

1. Remove splash deflector.
   1.1 Drill all rivets holding the splash deflector.

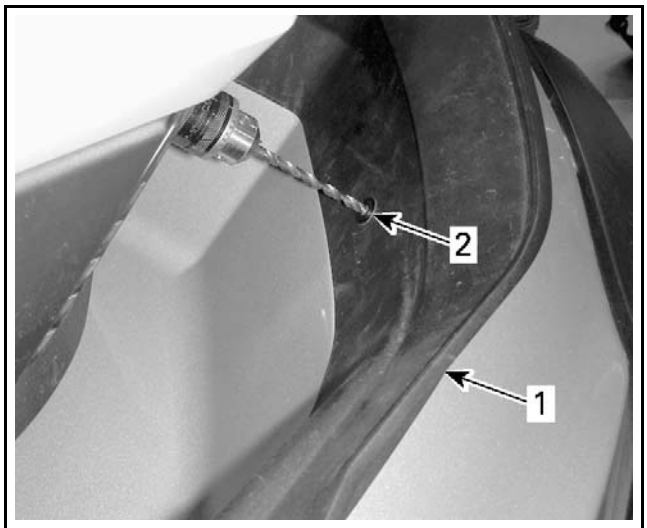

ssi2010-016-003_a

1. Splash deflector
2. Rivet

   1.2 Remove splash deflector from vehicle.

ssi2010-016-004

   1.3 Clean aluminum residues.
2. Using a cutting knife, make opening in the neoprene sealing pad.

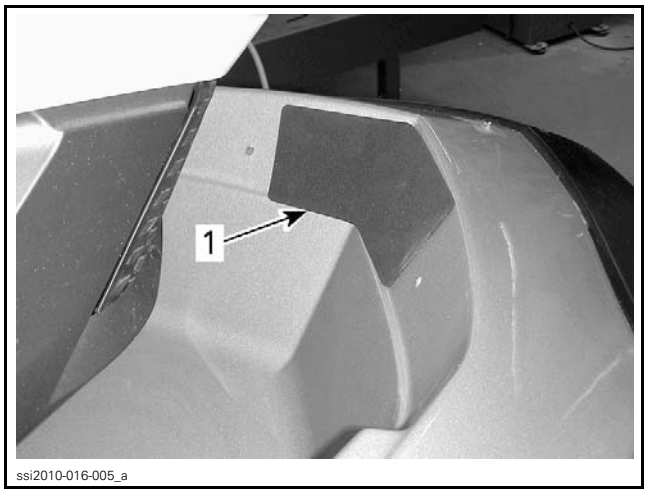

1. Neoprene sealing pad

3. Make 3 cuts according to the following picture.

NOTICE **Do not cut neoprene sealing pad too close to its edges to prevent tearing it off when folding and ensure proper sealing.**

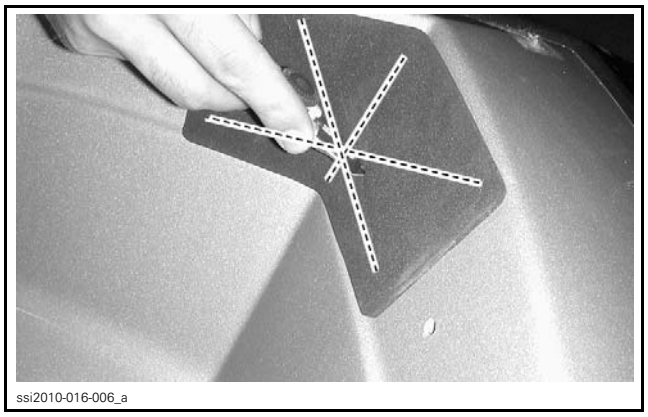

CUTTING PATTERN

4. Gently fold all flaps of the neoprene sealing pad towards the inside of the hull.

5. Unscrew and discard both elastic stop nuts holding the bow eyelet in place.

NOTE: The rubber washers and large washers should be kept for installation.

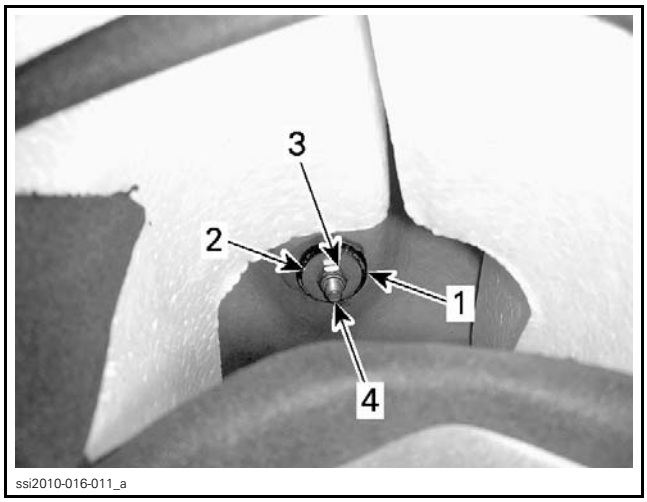

1. Rubber washer
2. Large washer
3. Elastic nut
4. Screw

6. From the outside of watercraft, pull bow eyelet to remove it from watercraft.
7. Clean any residue of silicone sealant on hull.

Models Without Suspension

1. Open the front storage cover.
2. Remove the storage bin.
3. Remove nuts and washers securing the bow eyelet or the iCATCH bow cup. Discard nuts.

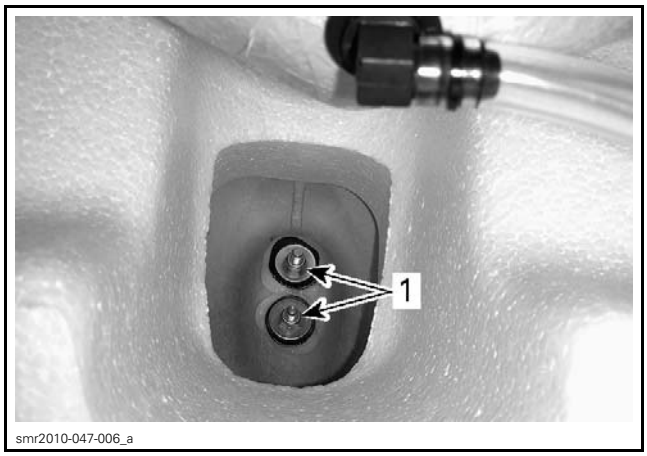

TYPICAL – INSIDE HULL
1. Eyelet retaining nuts

4. Remove the bow eyelet/iCATCH bow cup from the vehicle.
5. Clean any residue of silicone sealant from the hull.

Installing the Bow Eyelet

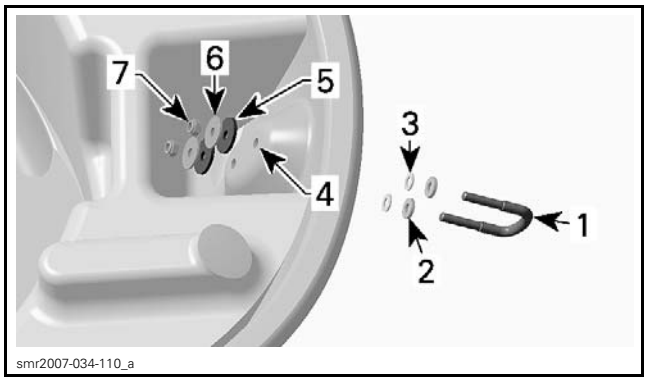

TYPICAL – BOW EYELET
1. *Bow eyelet*
2. *Small washer*
3. *Nylon washer*
4. *Loctite 5150 (silicone sealant) here*
5. *Rubber washer*
6. *Large washer*
7. *Elastic stop nut*

REQUIRED PRODUCT	LOCATION
CLEAR SILICONE SEALANT (P/N 296 000 309)	Inside hull, around holes

TIGHTENING TORQUE	
Retaining nuts	14.5 N•m (128 lbf•**in**)

Models with Suspension

Reinstall the splash deflector on the fixed deck using 6 rivets.

NOTICE **Ensure neoprene gasket edges have not been damaged during the installation procedure before reinstalling the splash deflector. If gasket is damaged, replace by a new one.**

STERN EYELETS

Removing the Stern Eyelet

1. On **models with suspension**, open the boarding platform and remove the applicable storage tray.
2. Inside hull, unscrew and discard elastic stop nuts securing the stern eyelet to hull.
3. Pull stern eyelet to remove it from watercraft.
4. Clean any residue of silicone sealant from the hull.

Installing the Stern Eyelet

1. Install small washers and nylon washers to stern eyelet and insert it through the hull.
2. Inside hull, apply CLEAR SILICONE SEALANT (P/N 296 000 309) all around holes.
3. Install eyelet and other parts using NEW elastic stop nuts as per following illustration.

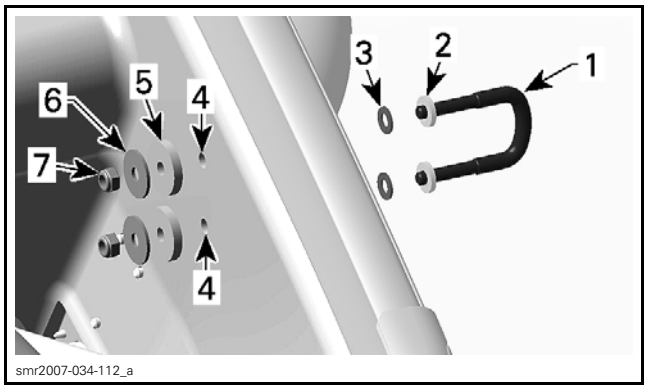

TYPICAL
1. *Stern eyelet*
2. *Small washer*
3. *Nylon washer*
4. *Loctite 5150 (silicone sealant) here*
5. *Rubber washer*
6. *Large washer*
7. *Elastic stop nut*

4. Tighten nuts to the specified torque.

TIGHTENING TORQUE	
Eyelet retaining nuts	14.5 N•m ± 1.5 N•m (128 lbf•**in** ± 13 lbf•**in**)

1503 4-TEC ENGINE

ENGINE			
Engine type			ROTAX® 1503 4-TEC™, 4-stroke, Single Over Head Camshaft (SOHC)
Declared Power		155	106 kW @ 7300 RPM
		215	152 kW @ 8000 RPM
		260	179 kW @ 8000 RPM
Induction		155	Naturally-Aspirated
		215/260	Supercharged intercooled
Number of cylinders			3
Number of valves			12 valves with hydraulic lifters (no adjustment)
Bore			100 mm (3.9 in)
Stroke			63.4 mm (2.5 in)
Displacement			1 493.8 cm³ (91 in³)
Compression ratio		155	10.6:1
		215/260	8.4:1
Maximum HP RPM		155	7300 RPM
		215/260	8000 RPM
Intake valve opening			0° BTDC
Intake valve closing			50° ABDC
Exhaust valve opening			50° BBDC
Exhaust valve closing			0° ATDC
Valve stem diameter	Intake	New	5.961 mm to 5.975 mm (.2347 in to .2352 in)
		Service limit	5.930 mm (.233 in)
	Exhaust	New	5.946 mm to 5.960 mm (.2341 in to .2346 in)
		Service limit	5.930 mm (.233 in)
Valve guide inner diameter		New	5.994 mm to 6.018 mm (.236 in to .2369 in)
		Service limit	6.060 mm (.2386 in)
Valve spring free length	Inner	New	41.02 mm (1.615 in)
		Service limit	38.80 mm (1.528 in)
	Outer	New	45.45 mm (1.789 in)
		Service limit	43.00 mm (1.693 in)
Valve seat contact width	Intake	New	1.10 mm to 1.30 mm (.043 in to .051 in)
		Service limit	1.60 mm (.063 in)
	Exhaust	New	1.25 mm to 1.55 mm (.049 in to .061 in)
		Service limit	1.80 mm (.071 in)

ENGINE				
Rocker arm inner diameter		New		20.007 mm to 20.020 mm (.7877 in to .7882 in)
		Service limit		20.050 mm (.7894 in)
Rocker arm shaft diameter		New		19.980 mm to 19.993 mm (.7866 in to .7871 in)
		Service limit		19.970 mm (.7862 in)
Cylinder head maximum warpage		Service limit		0.15 mm (.006 in)
Piston ring type		1st		Upper compression ring, rectangular
		2nd		Lower compression ring, tapered face
		3rd		Oil scraper ring
Ring end gap	Rectangular	New	All	0.30 mm to 0.50 mm (.012 in to .02 in)
		Service limit	155	1.50 mm (.059 in)
			215/260	1.20 mm (.047 in)
	Taper-face	New	All	0.35 mm to 0.55 mm (.014 in to .02 in)
		Service limit	155	1.50 mm (.059 in)
			215/260	1.20 mm (.047 in)
	Oil scraper ring	New	All	0.35 mm to 0.50 mm (.014 in to .02 in)
		Service limit	155	1.50 mm (.059 in)
			215/260	1.20 mm (.047 in)
Ring/piston groove clearance	Rectangular	New	All	0.025 mm - 0.070 mm (.001 in - .0028 in)
		Service limit		0.150 mm (.0059 in)
	Taper-face	New	All	0.015 mm - 0.060 mm (.0006 in - .0024 in)
		Service limit		0.150 mm (.0059 in)
	Oil scraper ring All	New	155	0.020 mm - 0.055 mm (.0008 in - .0022 in)
			215/260	0.010 mm to 0.180 mm (.0004 in to .0071 in)
		Service limit	155	0.150 mm (.0059 in)
			215/260	0.200 mm (.0079 in)
Piston measurement		New	155	99.951 mm to 99.969 mm (3.9351 in to 3.9358 in)
			215/260	99.931 mm to 99.949 mm (3.9343 in to 3.935 in)
		Service limit		99.900 mm (3.9331 in)
Piston/cylinder wall clearance		New	155	0.024 mm to 0.056 mm (.001 in to .002 in)
			215/260	0.044 mm to 0.076 mm (.0017 in to .003 in)
		Service limit		0.100 mm (.0039 in)
Cylinder taper		New maximum		0.038 mm (.0015 in)
		Service limit		0.100 mm (.0039 in)

ENGINE			
Cylinder out of round (maximum)		New maximum	0.008 mm (.0003 in)
		Service limit	0.015 mm (.0006 in)
Camshaft bearing journal diameter	Front	New	24.939 mm to 24.960 mm (.9819 in to .9827 in)
		Service limit	24.910 mm (.9807 in)
	PTO and center	New	39.892 mm to 39.905 mm (1.5706 in to 1.5711 in)
		Service limit	39.880 mm (1.5701 in)
Camshaft bearing inner diameter	Front	New	25.000 mm to 25.013 mm (.9843 in to .9848 in)
		Service limit	25.050 mm (.9862 in)
	PTO and center	New	40.000 mm to 40.020 mm (1.5748 in to 1.5756 in)
		Service limit	40.050 mm (1.5768 in)
Cam lobe height	Intake	New	31.540 mm to 31.740 mm (1.2417 in to 1.2496 in)
		Service limit	31.50 mm (1.2402 in)
	Exhaust	New	31.430 mm to 31.630 mm (1.2374 in to 1.2453 in)
		Service limit	31.380 mm (1.2354 in)
Crankshaft deflection		Maximum	0.05 mm (.002 in)
Crankshaft axial clearance		New	0.080 mm to 0.220 mm (.0031 in to .0087 in)
		Service limit	0.35 mm (.014 in)
Crankshaft bearing journal diameter		New	49.991 mm to 50.01 mm (1.9681 in to 1.9689 in)
		Service limit	49.950 mm (1.9665 in)
Crankshaft radial clearance		Service limit	0.07 mm (.0028 in)
Crankshaft bearing inside diameter		Service limit	50.10 mm (1.9724 in)
Crankshaft pin diameter		New	45.032 mm to 45.048 mm (1.7729 in to 1.7735 in)
		Service limit	45.029 mm (1.7728 in)
Crankshaft pin radial clearance		Service limit	0.09 mm (.0035 in)
Connecting rod big end diameter		Service limit	45.080 mm (1.7748 in)
Connecting rod big end radial play		Service limit	0.090 mm (.0035 in)
Connecting rod big end axial play		New	0.100 mm to 0.352 mm (.004 in to .014 in)
		Service limit	0.500 mm (.0197 in)
Connecting rod small end diameter		New	23.010 mm to 23.020 mm (.9059 in to .9063 in)
		Service limit	23.070 mm (.9083 in)
Connecting rod small end radial play		Service limit	0.080 mm (.0031 in)

ENGINE			
Piston pin diameter	New		22.996 mm to 23.000 mm (.9054 in to .9055 in)
	Service limit		22.990 mm (.9051 in)
Balancer shaft journal diameter	New		31.984 mm to 32.000 mm (1.2592 in to 1.2598 in)
	Service limit		31.950 mm (1.2579 in)
Balancer shaft bearing inside diameter	Service limit		32.11 mm (1.2642 in)
Balancer shaft radial clearance	Service limit		0.070 mm (.0028 in)
Balancer shaft axial clearance	New		0.020 mm to 0.250 mm (.0008 in to .0098 in)
	Service limit		0.35 mm (.014 in)
Supercharger slipping moment	New supercharger	215/260	9 N•m to 14 N•m (80 lbf•**in** to 124 lbf•**in**)
	Break-in supercharger	215/260	8 N•m to 12 N•m (71 lbf•**in** to 106 lbf•**in**)
Supercharger shaft driven plate journal depth	New	215/260	14.460 mm to 14.500 mm (.5693 in to .5709 in)
	Service limit	215/260	14.600 mm (.5748 in)
Supercharger drive gear thickness	New	215/260	11.000 mm to 11.050 mm (.4331 in to .435 in)
	Wear limit	215/260	10.900 mm (.4291 in)
Supercharger lock washer thickness	New	215/260	4.050 mm to 4.150 mm (.1594 in to .1634 in)
	Wear limit	215/260	3.950 mm (.1555 in)
Supercharger spring washer package height (not compressed)	New	215/260	10.7 mm to 10.9 mm (.4213 in to .4291 in)

AIR INTAKE SYSTEM	
Intake spark arrester	Tubular, wire screen

LUBRICATION SYSTEM		
Lubrication	Oil type	XPS 4-stroke synthetic blend oil (P/N 293 600 121) or a 10W40 **mineral** engine oil compatible with wet clutches (JASO MA certified oils)
	Capacity	3 L (3.2 qt (U.S. liq.)) oil change w/filter 4.5 L (4.8 qt (U.S. liq.)) total
	Type	Dry sump (2 oil pumps). Replaceable oil filter. Water-cooled oil cooler
Oil pressure	Idle (cold)	448 kPa - 648 kPa (65 PSI - 87 PSI)
	Idle (at 80°C (176°F))	Min. 228 kPa (33 PSI)
	4000 - 7500 (at 100°C (212°F))	400 kPa - 496 kPa (58 PSI - 72 PSI)

LUBRICATION SYSTEM		
Oil pressure regulator outer compression spring free length	New	60 mm (2.362 in)
	Service limit	57 mm (2.244 in)
Oil temperature sensor	Limp home mode activation	Above 95°C (203°F)
Oil pump radial clearance	Service limit	0.25 mm (.0098 in)
Oil pump axial clearance	Service limit	0.1 mm (.004 in)

COOLING SYSTEM	
Type	Closed loop cooling system
Coolant	Ethylene-glycol / distilled water mix (50%/50%). Use premix coolant from BRP (Long life antifreeze) or a coolant specially formulated for aluminum engines
Cooling system capacity	5.5 L (5.8 qt (U.S. liq.)) total
Thermostat	87°C (189°F)
Monitoring beeper setting	110°C (230°F)
Radiator cap opening pressure	90 kPa (13 PSI)

EXHAUST SYSTEM	
Type	D-Sea-Bel sound reduction system. Water cooled/water injected (open loop). Direct flow from jet pump
Water injection in muffler	3 x 3.5 mm (.138 in) on exhaust pipe and 1 x 3.5 mm (.138 in) on muffler

Midwest Manuals
Green Manuals
Paperless Manuals
For a Better Tomorrow
If you bought this manual from any other seller please leave them NEGATIVE feedback and notify me at bestshopmanuals@gmail.com

VEHICLES SPECIFICATIONS

FUEL SYSTEM			
Fuel injection type		1503 4-TEC	Multipoint fuel injection with iTC (intelligent Throttle Control). Single throttle body (62 mm (2.44 in)) with an actuator
		1630 ACE HO	Multipoint fuel injection with iTC (intelligent Throttle Control). Single throttle body (60 mm (2.36 in)) with an actuator
Fuel pressure			386 kPa to 414 kPa (56 PSI to 60 PSI)
Fuel injector	Quantity		3
Fuel type	Inside North America ((RON + MON)/2)	Naturally-Aspirated engine	87 or higher
		Supercharged engine	91 or higher
	Outside North America (RON)	Naturally-Aspirated engine	91 or higher
		Supercharged engine	95 or higher
Fuel tank (including reserve)		With suspension	60 L (16 U.S. gal.)
		Without suspension	70 L (18 U.S. gal.)
Fuel tank reserve (from low level signal)			approx. 12 L (3.2 U.S. gal.)
Idle speed		1503 4-TEC	1800 ± 50 RPM (not adjustable)
		1630 ACE HO	1700 ± 50 RPM (not adjustable)

ELECTRICAL SYSTEM			
Ignition system type			IDI (Inductive Discharge Ignition)
Battery			Sealed, 12 V, 18 A•h
Spark plug	Make and type	1503 4-TEC	NGK DCPR8E or an equivalent
		1630 ACE HO	KR9C-G or an equivalent
	Gap		0.7 mm to 0.8 mm (.028 in to .031 in)
Magneto generator output		1503 4-TEC	360 W @ 6000 RPM
		1630 ACE HO	420 W @ 6000 RPM
Stator			0.1 to 1.0 Ω
Anti-start system			RFDI D.E.S.S. (Radio Frequency Identification Digitally Encoded Security System) with selectable maximum vehicle speed settings for LK (learning key)
Ignition timing			Variable (electronically controlled)
Ignition coil	Primary	1503 4-TEC	0.85 to 1.15 Ω
		1630 ACE HO	0.80 to 0.97 Ω
	Secondary	1503 4-TEC	9.5 to 13.5 KΩ
		1630 ACE HO	N.A.

ELECTRICAL SYSTEM			
Engine speed limiter setting		1503 4-TEC	8300 RPM
		1630 ACE HO	8400 RPM
Fuse box	#1: iS control		5 A
	#2: Diagnostic connector		15 A
	#3: START/STOP		3 A
	#4: GPS		3 A
	#5: iBR power		30 A
	#6: Voltage rectifier/regulator		30 A
	#7: iS power		30 A
	#8: Battery (Fuses 2, 3, 4 and relay)		30 A
	#11: Depth sounder		3 A
	#12 O.T.A.S., Gauge start up, CAPS		3 A
	#13: Inj/Ign cyl 1		10 A
	#14: Inj/Ign cyl 2		10 A
	#15: Inj/Ign cyl 3		10 A
	#16: Starter solenoid		5 A
	#17: iBR control		5 A
	#18: Fuel pump		10 A
	#19: ECM power		15 A

STEERING		
Steering	RXT-X Series	Adjustable Ergonomic Steering (AES), tilt at 4 positions
	RXP-X Series	Adjustable Ergonomic Steering (AES)
	GTX Series RXT 260 RXT 260 RS WAKE PRO	Tilt at 4 positions
Steering nozzle pivoting angle		26°
O.T.A.S. (Off-Throttle Assisted Steering)		Electronically-controlled. Achieved with the iBR gate and engine speed

PROPULSION		
Jet pump	Type	Axial flow single stage
	Grease type	Jet pump bearing grease (P/N 293 550 032)

PROPULSION			
Impeller	Rotation (seen from rear)		Counterclockwise
	Pitch	GTX LTD iS RXT-X aS RXT-X aS RS	14°/25°
		GTX LTD 300 RXP-X RXP-X RS RXT-X 300 RXT-X 300 RS	13.6°/24°
		All Other	10°/21°
	Outside diameter	GTX LTD 300 RXP-X RXP-X RS RXT-X 300 RXT-X 300 RS	161 mm ± 0.06 mm (6.339 in ± .002 in)
		All Other	159 mm ± 0.06 mm (6.26 in ± .002 in)
Impeller/wear ring clearance	New		0 mm to 0.23 mm (0 in to .009 in)
	Service limit		0.35 mm (.0138 in)
Impeller shaft	End play (new)		0
	Side play		0
Drive shaft	Coupling type		Crowned splines, direct drive
	Deflection (max.)		0.5 mm (.02 in)
Minimum required water level for propulsion system			90 cm (3 ft) underneath the lowest rear portion of hull

IBR AND VTS		
Description		Intelligent Brake and Reverse activated by a LH lever. Electronically-controlled iBR gate to provide brake, reverse, neutral and forward position
Gate angle (from horizontal line of watercraft)	Forward	Approx. from +5° to -3°
	Neutral	Approx. -55°
	Braking	Approx. -70°
	Reverse	Approx. -70°
VTS system		Electronically-controlled through the VTS control button with 2 preset positions
VTS range angle		5° up, -3° down
Actuator		12 V, 75 A max. capacity. Reversible PWM (pulse-width modulation) motor

WEIGHT AND LOADING CAPACITY		
Dry weight	GTX	399 kg (880 lb)
	GTX S	462 kg (1,019 lb)
	GTX LTD RXT RXT RS WAKE PRO	406 kg (895 lb)
	GTX LTD iS	471 kg (1,038 lb)
	GTX LTD 300	412 kg (908 lb)
	RXP-X RXP-X RS	386 kg (851 lb)
	RXT-X 300 RXT-X 300 RS	415 kg (915 lb)
	RXT-X aS RXT-X aS RS	466 kg (1,027 lb)
Number of passenger (driver incl.)	RXP-X RXP-X RS	2
	All Other	3
Load limit (passenger(s) and luggages)	RXP-X Series	**182 kg (400 lb)**
	Models with suspension	227 kg (500 lb)
	All Other	272 kg (600 lb)
Storage capacity	RXP-X Series	116.4 L (30.75 U.S. gal.)
	Models with suspension	63 L (16.64 U.S. gal.)
	All Other	162 L (42.8 U.S. gal.)

DIMENSIONS		
Overall length	RXP-X Series	331.6 cm (131 in)
	All Other	353.5 cm (139.2 in)
Overall width	RXP-X Series	122.7 cm (48.3 in)
	All Other	122.4 cm (48.2 in)
Overall height	GTX GTX LTD RXT RXT RS WAKE PRO	116.6 cm (45.9 in)
	GTX S GTX LTD iS	111.4 cm (43.9 in)
	RXP-X Series	114.7 cm (45.2 in)
	RXT-X Series	118.1 cm (46.5 in)

MATERIALS	
Impeller material	Stainless steel
Impeller housing/stator	Aluminum/aluminum

MATERIALS	
Hull	CM-TEC process, composite
Inlet grate	Aluminum
Steering cover	Thermoplastic
Venturi	Aluminum
Nozzle	Aluminum
Fuel tank	Polyethylene
Seat	Polyurethane/foam

WIRING DIAGRAM INFORMATION

GENERAL

WIRING DIAGRAM LOCATION

The wiring diagrams are in the back cover pocket.

WIRING DIAGRAM CODES

Wire Color Codes

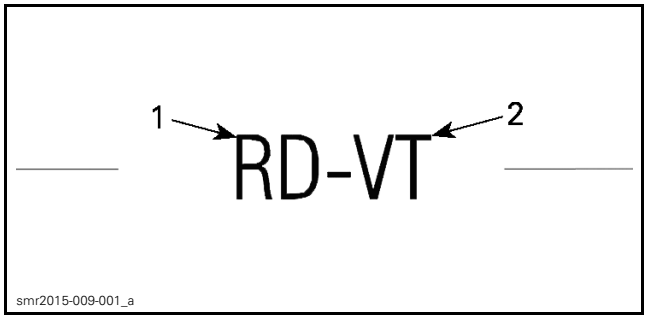

1. *Wire main color*
2. *Tracer (thin colored line)*

General Wire Color Use

COLOR	USE
RED	Battery power (12 Vdc directly connected to battery)
RED + tracer	Fused 12 Vdc power or switched power from relay
VIOLET or VIOLET + tracer	Fused 12 Vdc accessory power from fuse box
YELLOW	Alternating current (AC) from magneto
BLACK	Ground
WHITE/BEIGE WHITE/BLACK	CAN HI wires, CAN LO wires

Color Codes

COLOR CODES			
CODE	COLOR	CODE	COLOR
BG	BEIGE (TAN)	OR / OG	ORANGE
BK	BLACK	PK	PINK
BN	BROWN	RD	RED
BU	BLUE	VT	VIOLET
GN	GREEN	WH	WHITE
GY	GRAY	YE	YELLOW

Terminal Identification on Connector

On the wiring diagram, a letter or a digit is used to identify the terminal position in a connector.

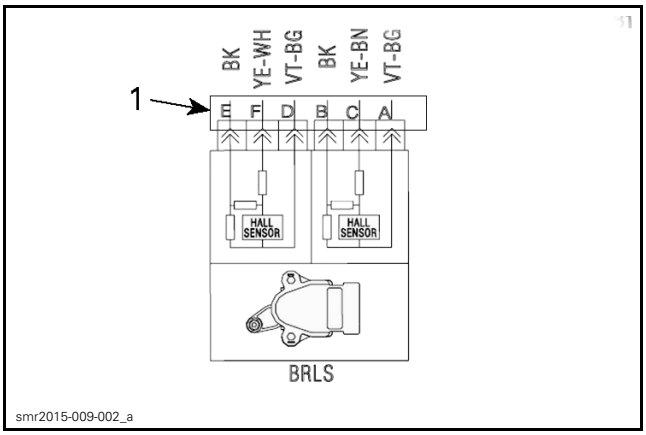

1. *Terminal position*

On a connector, a letter or a digit is usually molded on the connector to identify the terminal position.

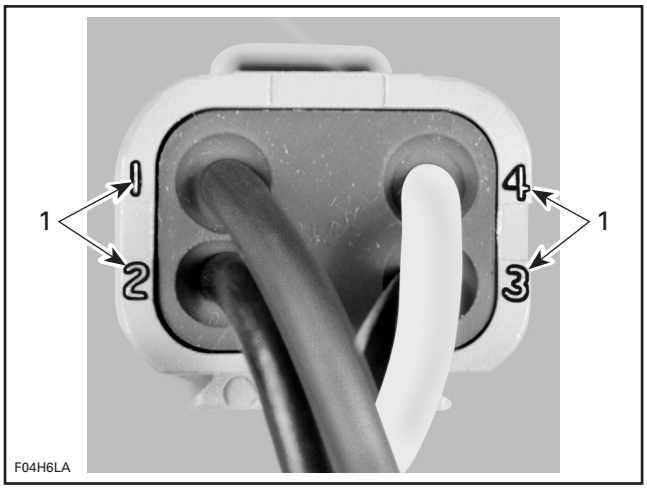

TYPICAL
1. *Wire identification numbers*

Terminal Identification on a Wiring Diagram

In-line connectors of wiring harnesses are identified on the wiring diagram with their approximate location and the following information.

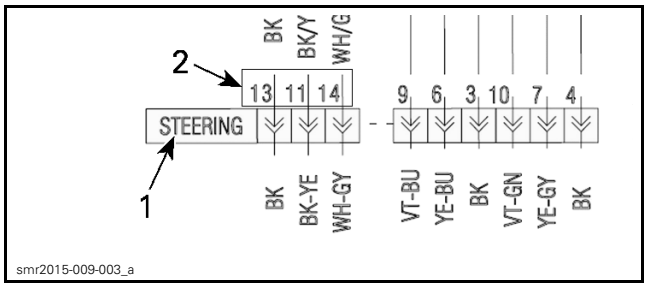

TYPICAL
1. *Connector location*
2. *Wire pin location in connector*

Connectors Linked by a Dashed Line

Connectors may be divided into segments linked by dashed lines, however, some segments of the same connector may be found elsewhere on the wiring diagram.

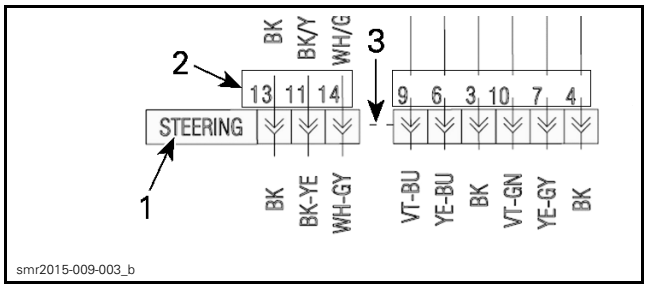

TYPICAL
1. *Connector identification and location*
2. *Connector pin number*
3. *Dashed line links connector segments as one*

CAN Wire Circuit References

On the wiring diagram, CAN linked components use the following coding.

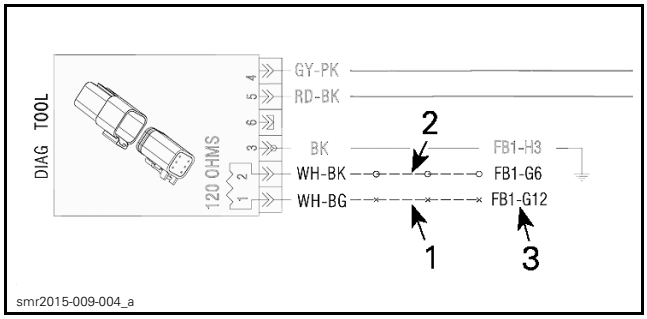

TYPICAL
1. *CAN HI wire (x)*
2. *CAN LOW wire (o)*
3. *Wire destination*

FB1 - G12 = : Terminal G12 in the fuse box no. 1

Corresponding CAN links are identified at fuse box using the following coding.

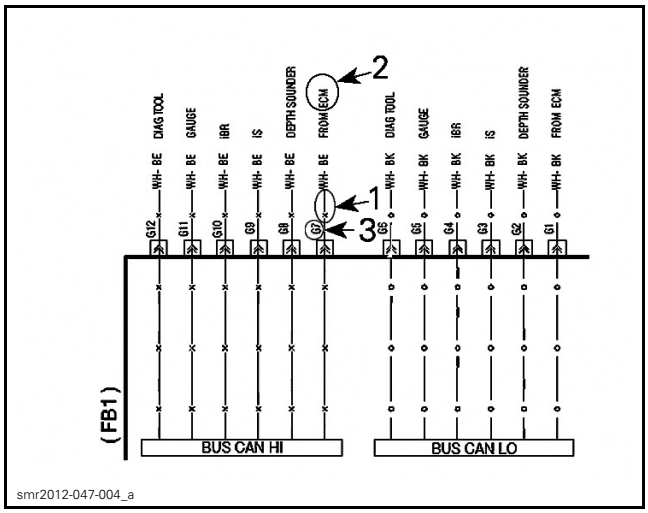

TYPICAL
1. *CAN wire*
2. *Wire origin*
3. *Destination terminal (as referenced at ECM)*

Component Application

If a component in the wiring diagram is not applicable to every vehicle model, or can be installed as an option or accessory on certain models, the component shall be enclosed in a dash line.

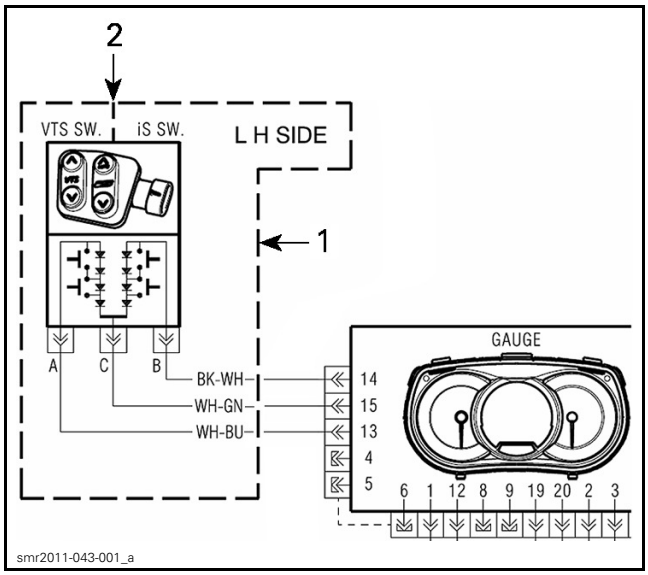

1. *Component(s) optional or applicable to certain models*
2. *Indicates each switch is a separate component*

WIRING HARNESS AND CONNECTORS

SERVICE TOOLS

Description	Part Number	Page
CRIMPING TOOL (HEAVY GAUGE WIRE)	529 035 730	13
ECM ADAPTER TOOL	529 036 166	8
ECM TERMINAL REMOVER 2.25	529 036 175	8
ECM TERMINAL REMOVER 3.36	529 036 174	8

SERVICE TOOLS – OTHER SUPPLIER

Description	Part Number	Page
DELPHI TERMINAL EXTRACTOR	12094429	9–10
FCI TERMINAL EXTRACTOR TOOL	54241678	11
GM TERMINAL EXTRACTOR	12094430	12
MOLEX 150 TERMINAL EXTRACTOR TOOL	63813 - 1500	11

MAIN HARNESS (WITH SUSPENSION)

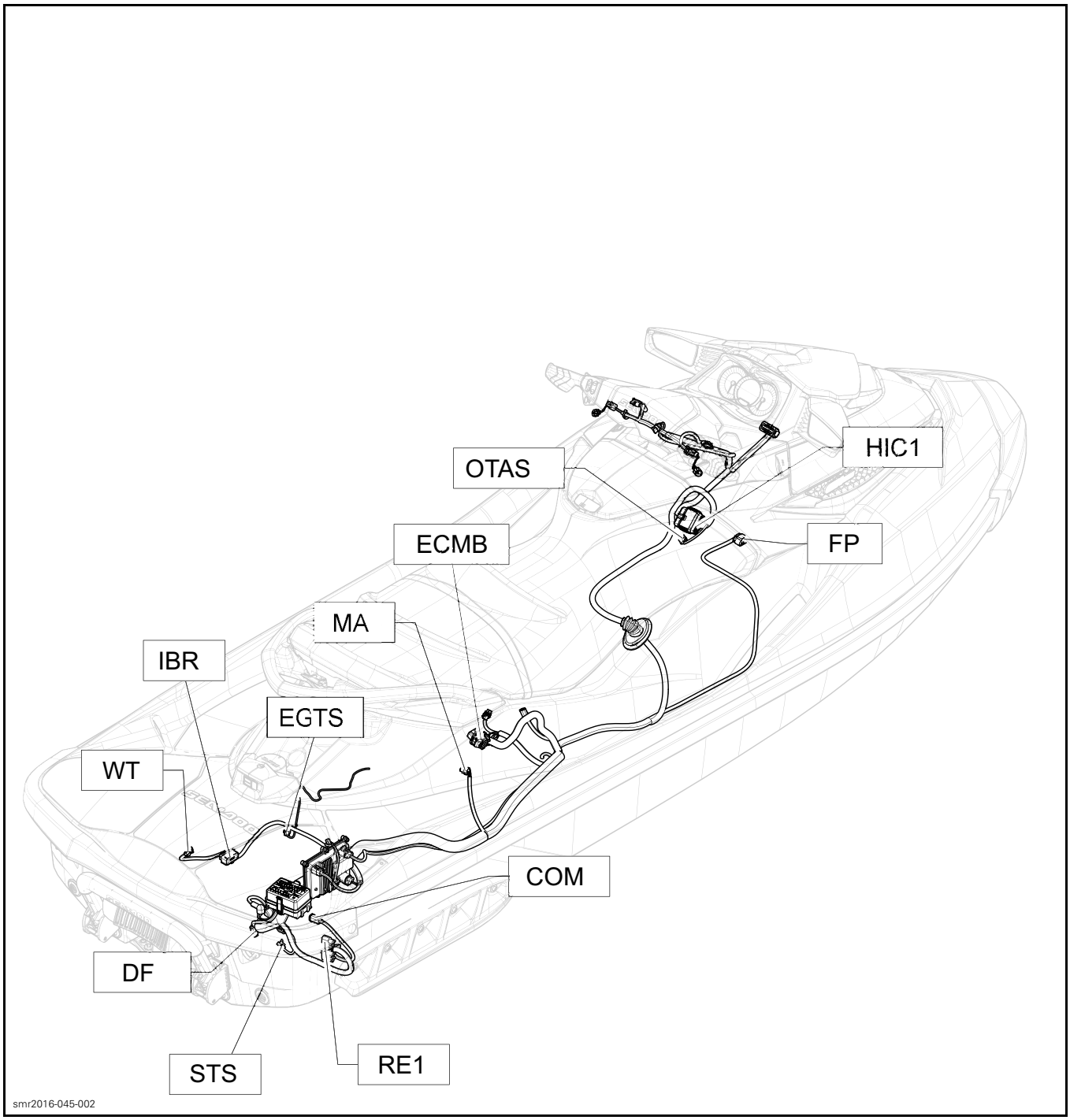

MAIN HARNESS (WITHOUT SUSPENSION)

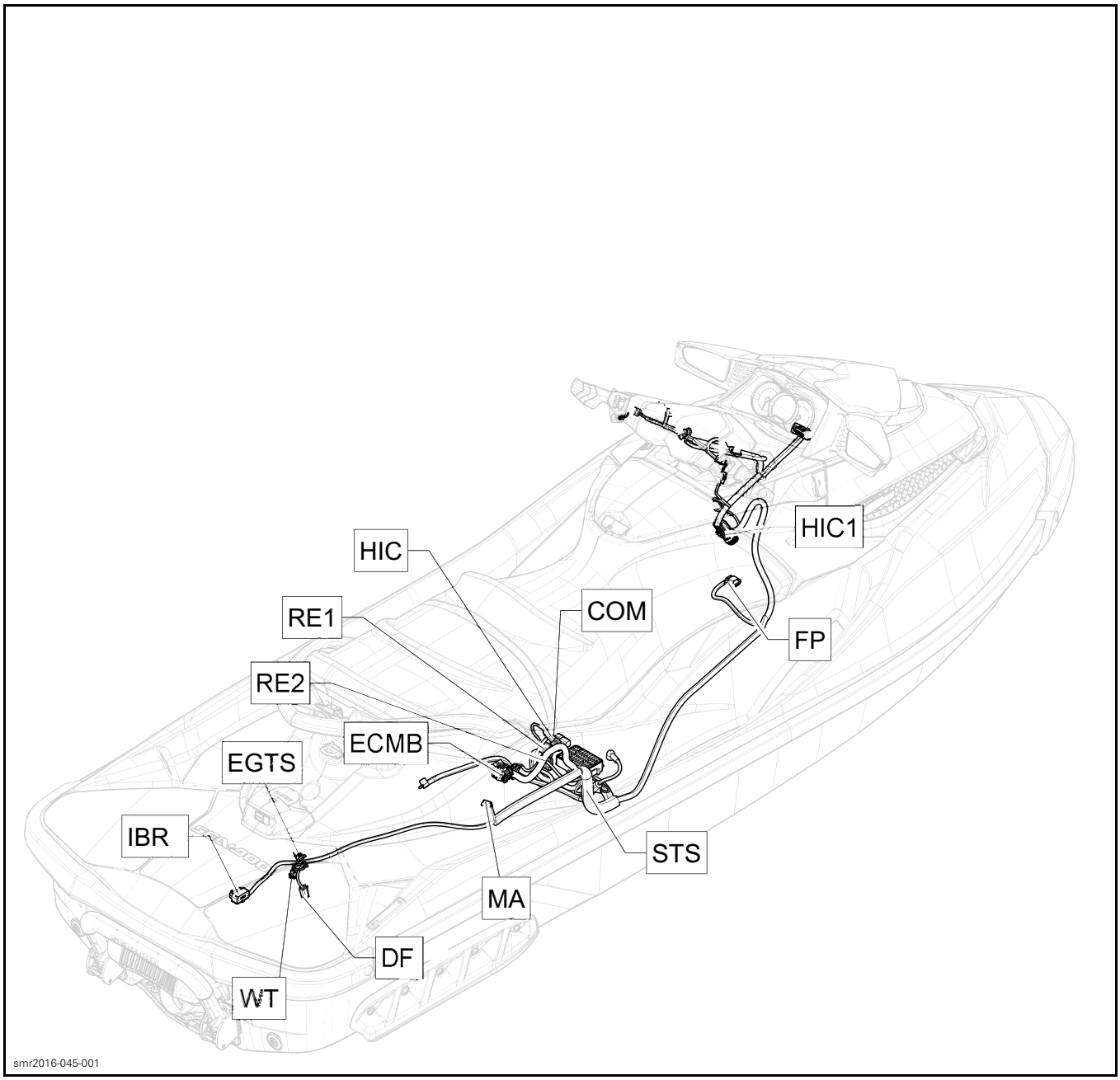

GENERAL

ACRONYM	DEFINITION
ACC	ACCessory
ATS	Air Temperature Sensor
BAT+	Battery +
BP	Battery Post
BRLS	Brake and Reverse Lever Sensor
CAN	Controlled Area Network
CAPS	Camshaft Position Sensor
CL	Cluster
COM	Communication
CPS	Crankshaft Position Sensor
CS	Cruise Switch
CTRL	Control
CTS	Coolant Temperature Sensor
CYL	Cylinder
DESS	Digitally Encoded Security System
DIAG TOOL	Diagnostic connector
DF	Depth Finder
DS	DESS Post
ECMB	ECM connector B
ECMB_L	ECM connector B Large pin
ECMB_S	ECM connector B Small pin
ECO	ECO switch
EGTS	Engine Gas Temperature Sensor
ETC	Electronic Throttle Control
FB	Fusebox
FP	Fuel Pump
GND	Ground Engine
GND1	Ground iBR
GND2	Ground Fuse Box
GND3	Ground Regulator

ACRONYM	DEFINITION
HIC	Harness Inter Connector to Engine
HIC1	Harness Inter Connector to Steering
iBR	Intelligent Brake and Reverse
iS	Intelligent Suspension
KS	Knock Sensor
LTS	Lake Temperature Sensor
MA	Magneto
MAPS	Manifold Air Pressure Sensor
MATS	Manifold Air (intake) Temperature Sensor
MSL	Multi Switch Left
MSR	Multi Switch right
OPS	Oil Pressure Switch
OTAS	Off Throttle Assisted Steering
REG	REGulator
RE1	Reg/Rect connecteur 1
RE2	Reg/Rect connecteur 2
RFID	Radio Frequency Identification
SOL	Solenoid
SPS	Suspension Position Sensor
SSS	Start Stop Switch
STS	Starter Solenoid
SUP	Suspension Power
SUS	Suspension Signal
TAS	Throttle Accelerator Sensor
TOPS	Tip Over Position Sensor
TPS	Throttle Position Sensor
VTS	Variable Trim System
WT	Water Termperature
FLS	Fuel level sensor

PROCEDURES

⚠ WARNING

When disassembling any connector for repair or replacement on the vehicle, always disconnect the battery to ensure all electrical power is removed and prevent any possibility of a short circuit. Refer to *CHARGING SYSTEM* subsection.

DIAGNOSTIC CONNECTOR (DEUTSCH)

Connector Disassembly and Reassembly

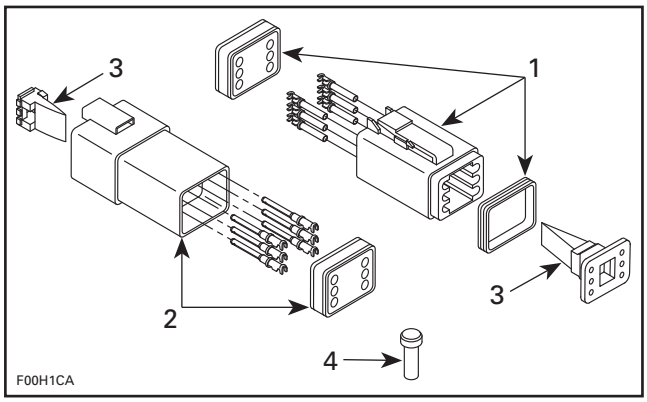

TYPICAL - DEUTSCH CONNECTOR
1. *Male connector*
2. *Female connector*
3. *Secondary lock*
4. *Sealing cap*

NOTICE Do not apply dielectric grease on terminal inside connector.

To remove terminals from connector, proceed as follows:

1. Using long nose pliers, pull out the plastic lock from between the terminals.

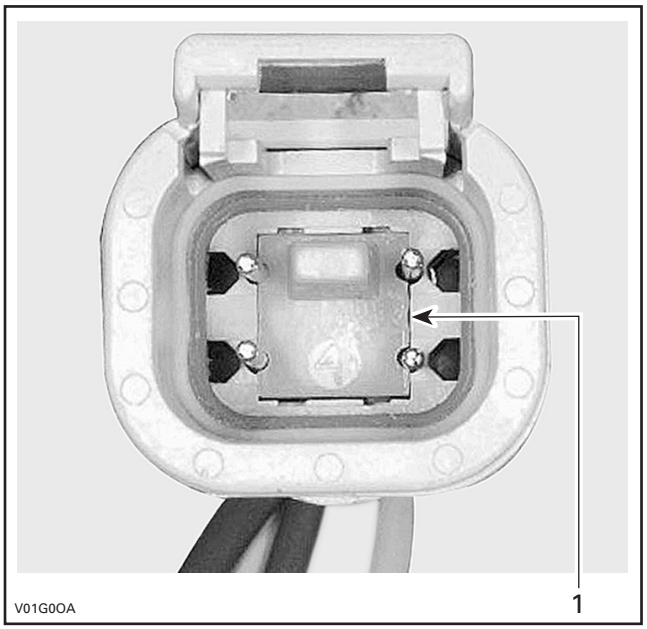

TYPICAL - FEMALE CONNECTOR
1. *Female lock*

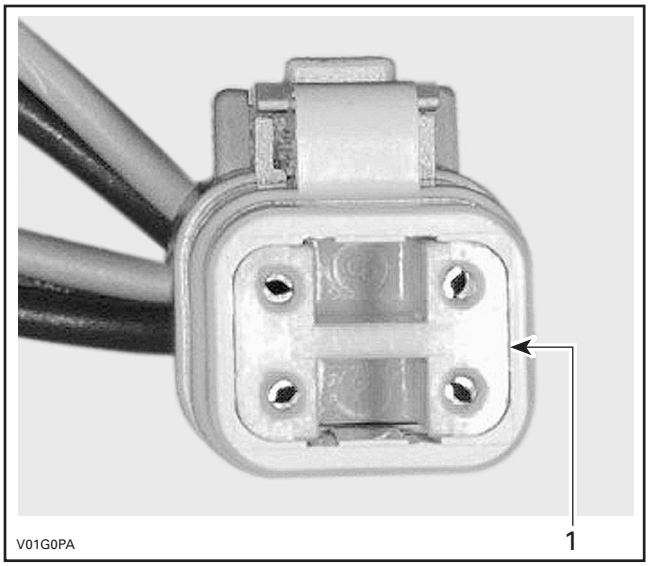

TYPICAL - MALE CONNECTOR
1. *Male lock*

NOTE: Before pin extraction, push wire forward to relieve pressure on retaining tab.

2. Insert a 4.8 mm (.189 in) wide screwdriver blade inside the front of the terminal cavity.
3. Pry the retaining tab away from the terminal while gently pulling the wire and terminal out of the back of the connector.

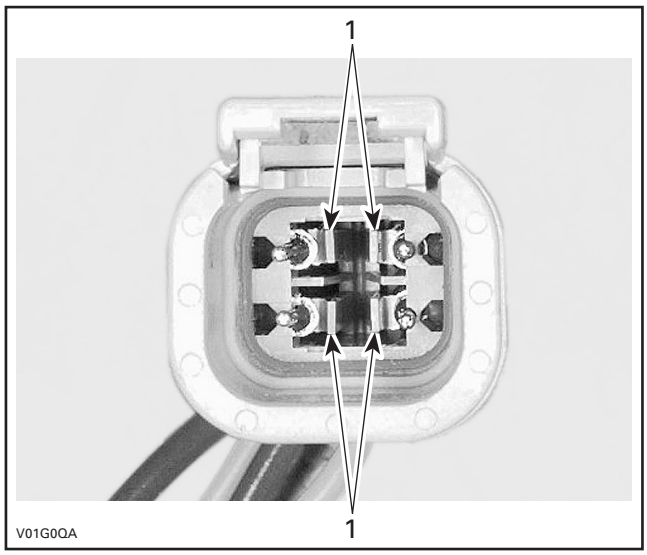

TYPICAL - FEMALE CONNECTOR
1. Retaining tabs

To install:

1. For insertion of a terminal, ensure the plastic lock is removed.
2. Insert terminal through the back of the connector in the appropriate position, and push it in as far as it will go. You should feel or hear the terminal lock engage.
3. Pull back on the terminal wire to ensure the retention fingers are holding the terminal.
4. After all required terminals have been inserted, the lock must be installed.

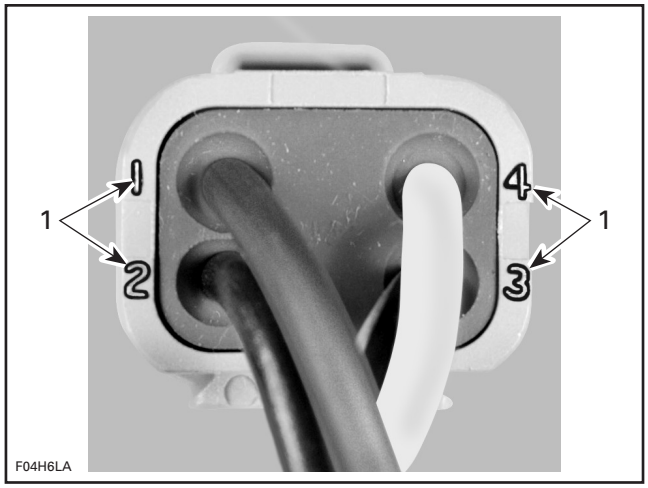

TYPICAL - CONNECTOR PIN-OUT
1. Terminal position identification numbers

ECM CONNECTOR (MOLEX)

There are 2 connectors on the ECM.

The engine wiring harness connector is connected to ECM connector "A". The vehicle wiring harness connector is connected to ECM connector "B".

Each ECM connector has 48 pins however, connectors "A" and "B" are not interchangeable due to their specific keyways.

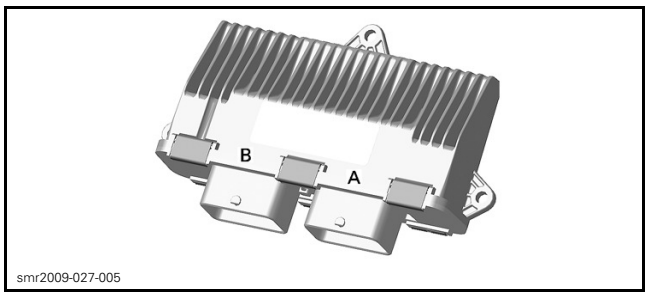

ECM CONNECTORS

Connector Removal

1. To access the ECM, refer to *ELECTRONIC FUEL INJECTION (EFI)* subsection.
2. Press **and hold** the locking tab on the connector to be disconnected.

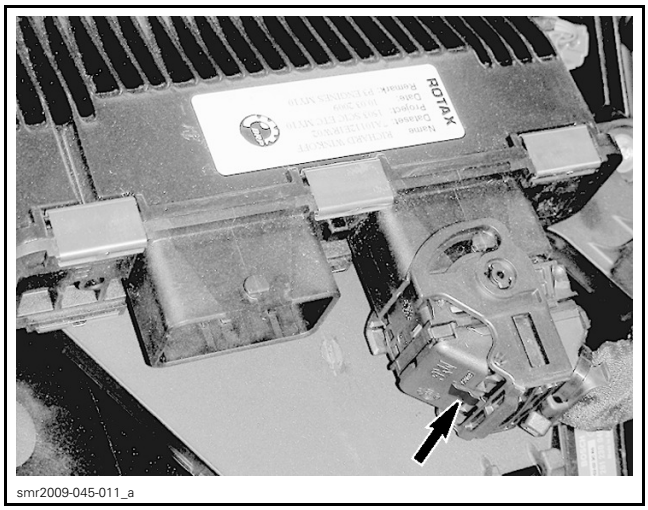

LOCKING TAB TO PRESS AND HOLD

3. As you hold the locking tab, rotate the connector locking cam until it stops.

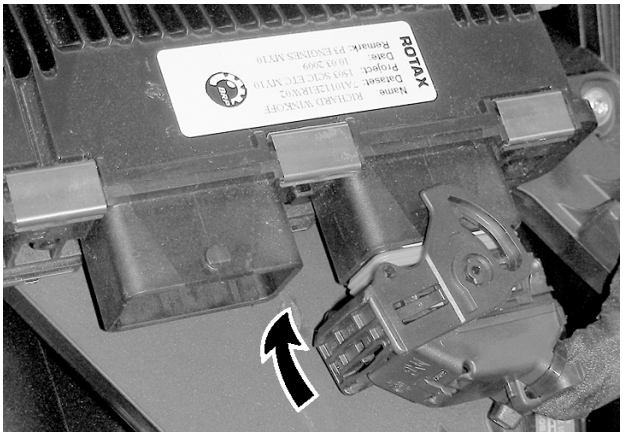

smr2009-045-012_a

CONNECTOR LOCKING CAM ROTATION TO RELEASE

4. Pull connector off ECM.

smr2009-045-013_a

Connector Installation

1. Fully open connector locking cam.

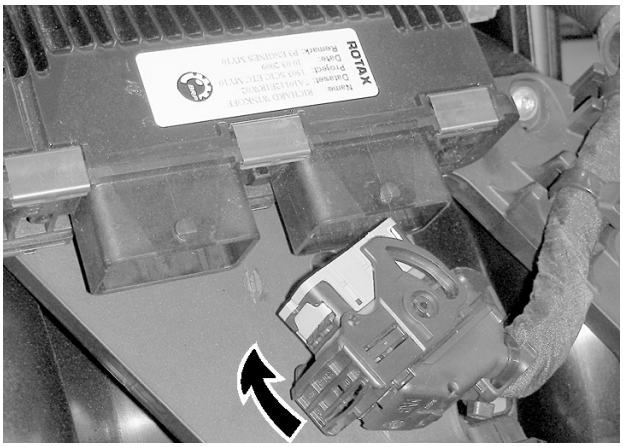

smr2009-045-013_b

CONNECTOR LOCKING CAM IN RELEASE POSITION

2. Insert connector on ECM.
3. As you push the connector onto the ECM, rotate the connector locking cam until it snaps locked.

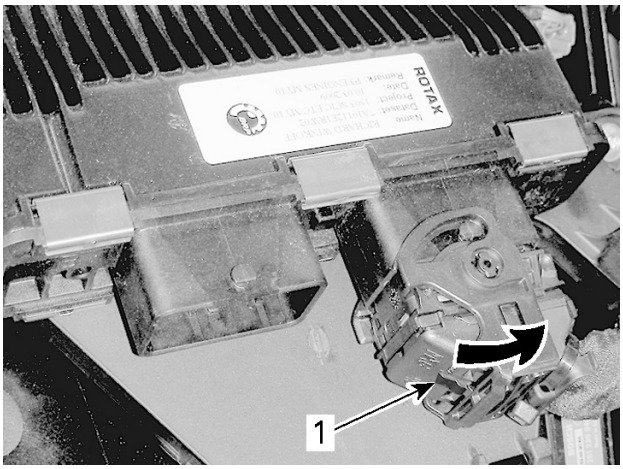

smr2009-045-011_b

1. Locked here

4. Ensure the locking tab is fully out.

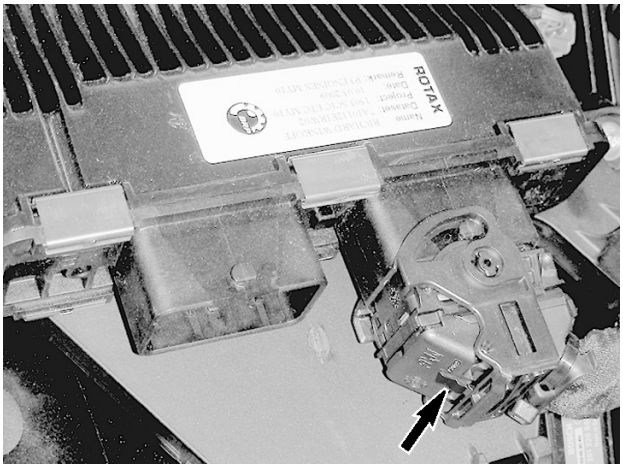

smr2009-045-011_a

LOCKING TAB FULLY OUT

Connector Inspection

Before replacing an ECM, always check electrical connections.

1. Ensure connector locking mechanism is functioning properly.
2. Ensure all wire terminals (pins) are properly locked in the connector.
3. Ensure they are very tight, make good contact with the pins in the ECM.
4. Ensure the pins in the harness connector and the ECM connector are clean, shiny and corrosion-free.
5. Check wiring harness for signs of scoring.

NOTE: A "defective ECM module" could possibly be repaired simply by disconnecting and reconnecting it.

NOTICE **Do not apply any lubricant product to the pins of the ECM connector.**

Connector Probing

The most recommended and safest method to probe the MOLEX (ECM) connector terminals is to use the ECM ADAPTER TOOL (P/N 529 036 166). This tool will prevent deforming or enlarging of the terminals, which would lead to bad ECM terminal contact creating intermittent or permanent problems.

1. Disconnect the ECM connector to be probed, and reconnect it on the ECM adapter.
2. Probe wire terminals of the circuit to be tested directly in the adapter holes.

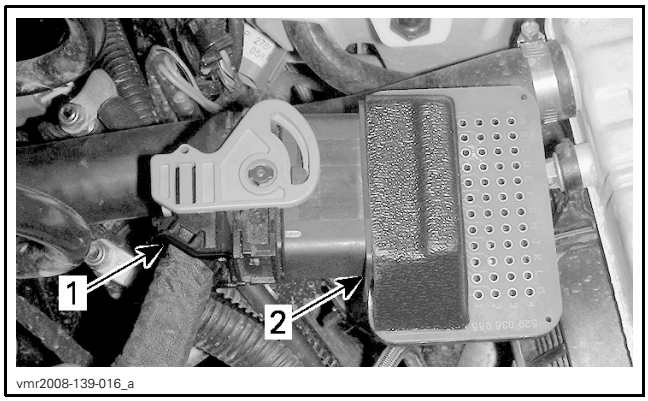

TYPICAL
1. ECM connector
2. ECM adapter

NOTICE **Never probe directly on the ECM harness connector. This could change the shape or enlarge the terminals and create intermittent or permanent contact problems.**

Connector Terminal Removal (Harness Connector)

To remove a signal terminal from the ECM harness connector, use the ECM TERMINAL REMOVER 2.25 (P/N 529 036 175).

To remove a power terminal, use the ECM TERMINAL REMOVER 3.36 (P/N 529 036 174).

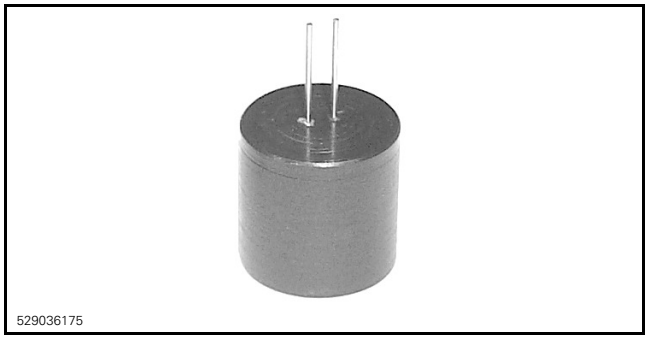

1. Remove rear protector from connector.
2. Pull out the connector lock.

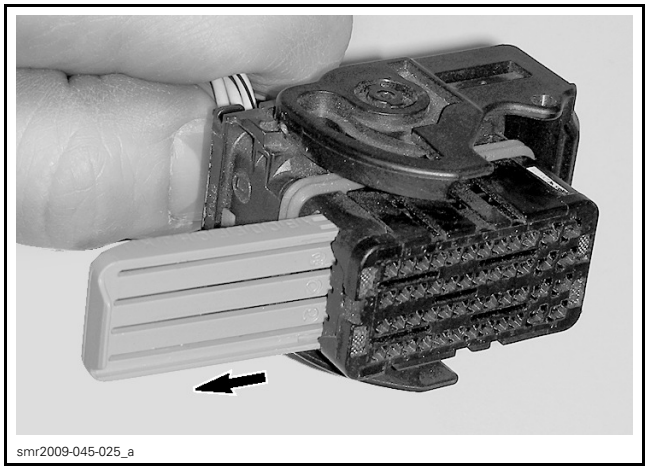

3. Insert tool to unlock terminal.

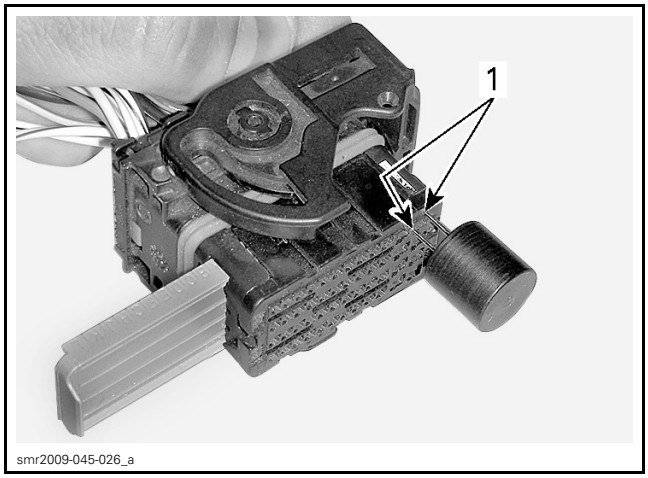

1. Unlock here

4. Gently pull on the wire to extract the terminal out the back of the connector.

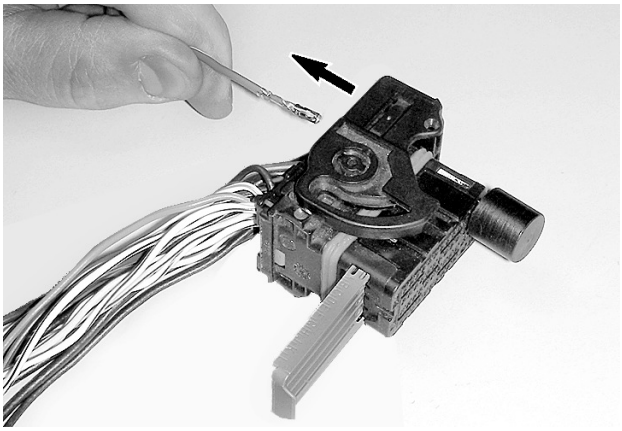

smr2009-045-027_a

NOTICE Before installing wire terminals in the connector, ensure all terminals are properly crimped on wires. After installation of wire terminals in the connectors, ensure they are properly locked by gently pulling on them as if to extract them.

TAS AND OTAS CONNECTORS (DELPHI/PACKARD)

Connector Terminal Removal

To remove a terminal (pin) from the connector, use a special tool such as the DELPHI TERMINAL EXTRACTOR (P/N 12094429).

smr2010-052-001

DELPHI TERMINAL EXTRACTOR (P/N 12094429)

NOTE: Grinding the tool end to a taper is required.

1. Carefully insert the tool in the space provided to release the pin lock.
2. Push the pin out the front of the connector by pushing on the wire.

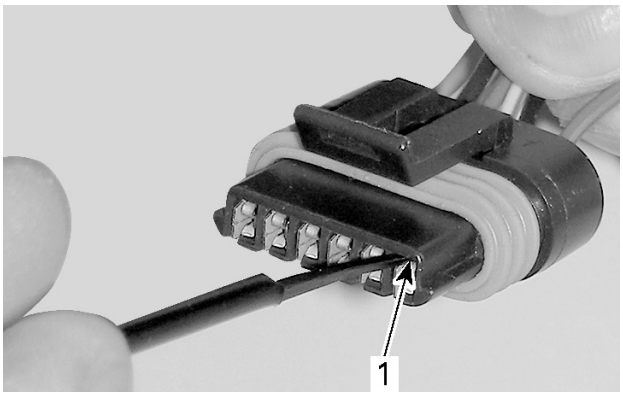

smr2009-045-014_a

1. Unlock terminal here

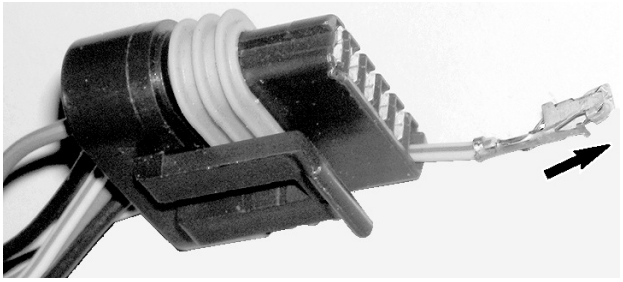

smr2009-045-015_a

NOTICE Before installing terminals in the connectors, ensure all terminals are properly crimped on the wires. After installation of the wire terminals in the connectors, ensure they are properly locked by gently pushing on them as if to extract them.

FUEL PUMP AND STARTER SOLENOID CONNECTORS (DELPHI)

Terminal Removal

1. To remove a terminal from connector, first remove the locking cap.

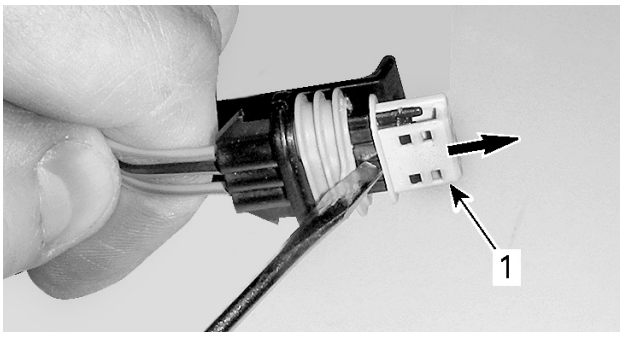

smr2009-045-023_a

1. Pry out locking cap

2. Carefully insert the DELPHI TERMINAL EXTRACTOR (P/N 12094429) in the space provided to release the pin lock.

smr2010-052-001

DELPHI TERMINAL EXTRACTOR (P/N 12094429)

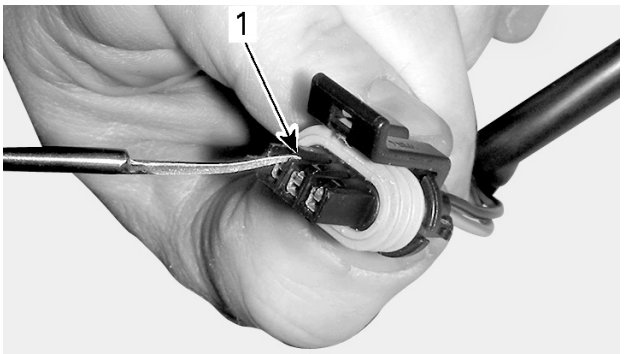

smr2009-045-024_a

1. *Unlock here*

3. Gently pull on the wire to extract the pin out the back of the connector.

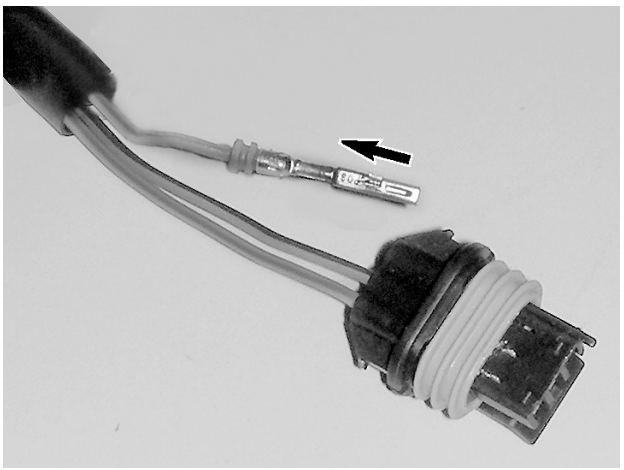
smr2009-045-028_a

NOTICE Before installing terminals in the connectors, ensure all terminals are properly crimped on the wires. After installation of the wire terminals in the connectors, ensure they are properly locked by gently pushing on them as if to extract them.

STEERING CONNECTOR (20 PIN MOLEX 150)

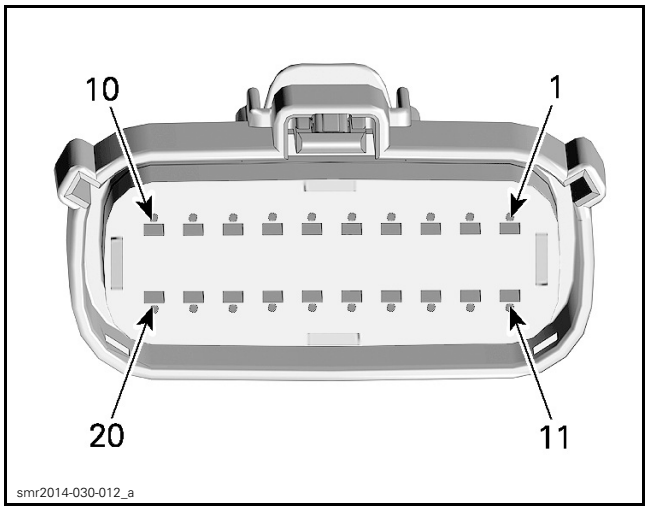

smr2014-030-012_a

1. *Female connector pin-out (sockets)*

Connector Disconnect

Pull back the red secondary lock from the connector latch lever. Do not remove it from the latch.

Push the two connector assemblies together to unload the latch.

Depress the latch lever and pull the two connector assemblies apart.

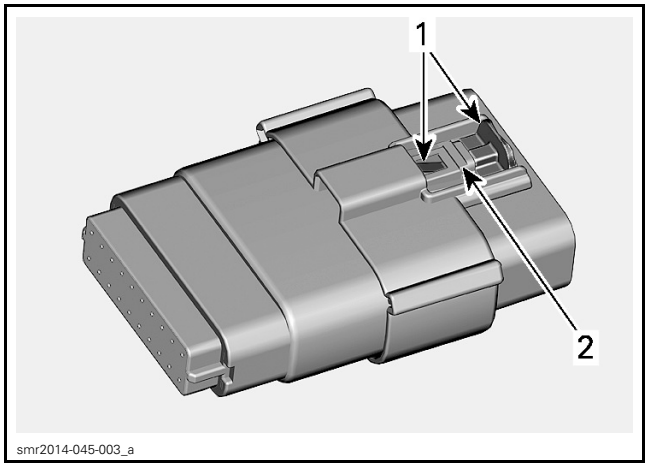

smr2014-045-003_a

1. *Red secondary lock (shown out)*
2. *Latch lever*

Connector Probing

1. Disconnect the steering connector in the vehicle and connect it to the Diagnostic Harness (P/N 284560054).
2. Probe the applicable circuit using the test connector on the diagnostic harness.

NOTICE **Attempting to probe the connector without using the diagnostic connector may damage the connector pins, or even cause a short circuit if testing an energized circuit.**

Socket Extraction (Female Connector)

1. Insert a small flat screwdriver in the pry holes of the socket locator, on the socket side of the connector.

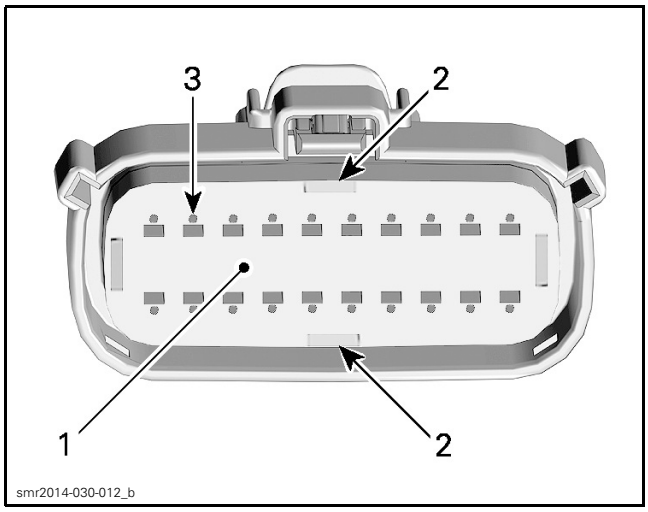

1. Socket locator
2. Pry holes
3. Holes for inserting terminal extractor tool

2. Carefully pull out the socket locator out to the detent position (approximately 5 mm).

NOTE: Do not remove the socket locator from the connector housing.

3. Insert the extractor tool in the small hole adjacent to the socket.

NOTE: Push the extractor tool in only as far as required to release the lock from the socket. The tool should slide along the socket and be inserted between the socket and the lock.

REQUIRED TOOL
FCI TERMINAL EXTRACTOR TOOL (P/N 54241678) or,
MOLEX 150 TERMINAL EXTRACTOR TOOL (P/N 63813 - 1500)

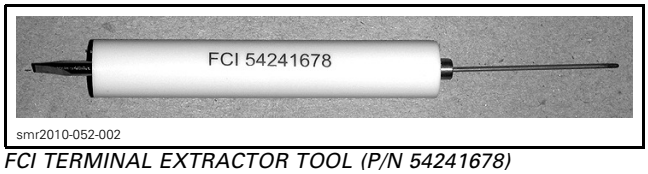

FCI TERMINAL EXTRACTOR TOOL (P/N 54241678)

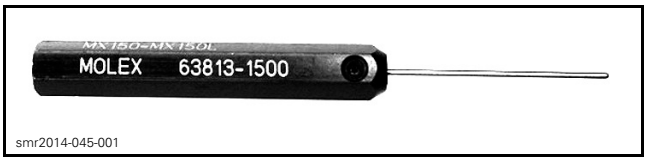

MOLEX 150 TERMINAL EXTRACTOR TOOL 6(P/N 3813 - 1500)

4. Gently pull on the wire to extract the socket out the back of the connector.

Pin Extraction (Male Connector)

1. Using a pair of thin long nose pliers, pull the pin locator out to the detent position (approximately 5 mm). This will allow unlocking of the pins.

NOTICE **Do not attempt to remove the pin locator or damage will occur. Be careful not to bend the pins when using the pliers.**

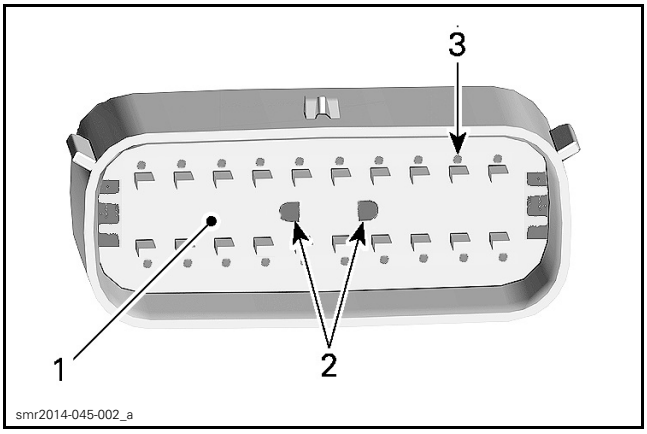

1. Pin locator
2. Insert long nose pliers here
3. Holes for inserting terminal extractor tool

2. Insert the extractor tool in the small hole adjacent to the pin.

NOTE: Push the extractor tool in only as far as required to release the lock from the pin. The tool should slide along the pin and be inserted between the pin and the lock.

REQUIRED TOOL
FCI TERMINAL EXTRACTOR TOOL (P/N 54241678) or,
MOLEX 150 TERMINAL EXTRACTOR TOOL (P/N 63813 - 1500)

FCI TERMINAL EXTRACTOR TOOL (P/N 54241678)

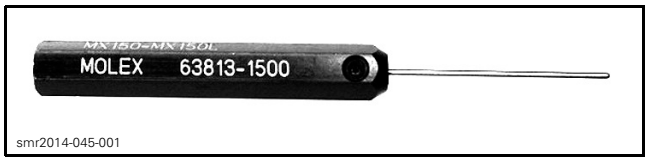

MOLEX 150 TERMINAL EXTRACTOR TOOL 6(P/N 3813 - 1500)

3. Gently pull on the wire to extract the pin out the back of the connector.

Pin Insertion

1. Ensure the terminal (pin) is properly crimped onto the wire.
2. Ensure the pin locator (the white plastic insert in the connector) is out in the detent position.
3. Insert the pin in through the back of the connector.

NOTE: When inserting the pin, insert the stepped portion facing the notch in the connector pin hole.

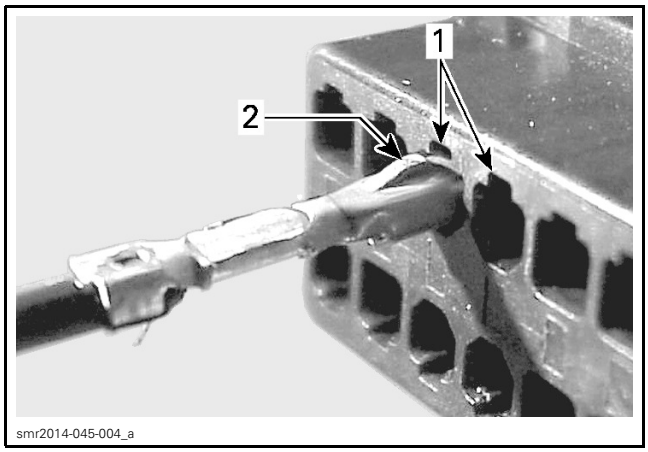

TYPICAL - PIN INSERTION
1. Notch
2. Stepped portion towards notch

4. Push the pin in until the pin lock engages the pin.
5. Gently pull on the pin to ensure it is properly locked.
6. Repeat previous steps for each pin to be inserted.
7. Push the pin locator into the connector to the locked position.

Reconnecting the 20 pin MOLEX Connector

1. Insert the male connector into the female connector and push it in until the latch lever fully engages.
2. Push in the secondary lock (red tab) until it fully engages into the latch lever.

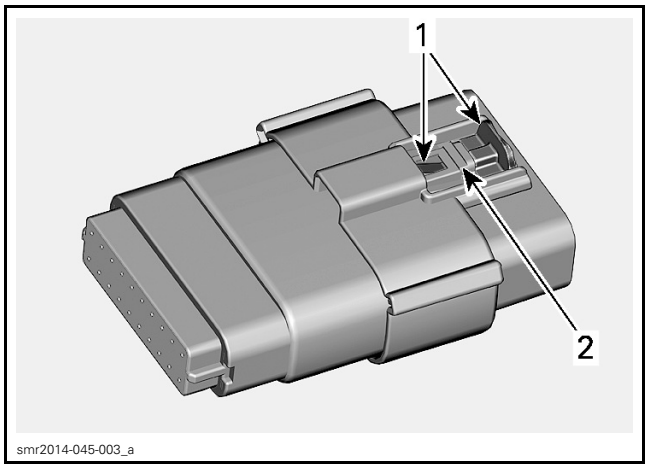

1. Red secondary lock (shown out)
2. Latch lever

ENGINE CONNECTOR (4 PIN MOLEX 150)

Refer to *STEERING CONNECTOR (20 PIN MOLEX 150)* for applicable procedures.

MULTIFUNCTION GAUGE CONNECTOR (6 PIN MOLEX 150)

Refer to *STEERING CONNECTOR (20 PIN MOLEX 150)* for applicable procedures.

VOLTAGE REGULATOR/RECTIFIER CONNECTOR (FURUKAWA)

Terminal Removal

1. Remove the secondary lock (plastic insert).

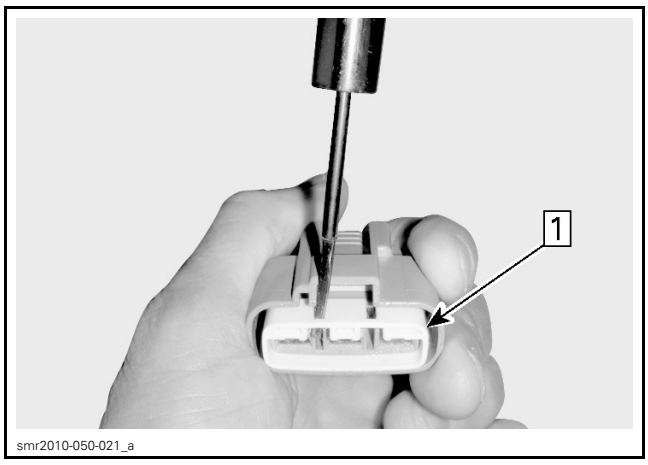

Step 1: Remove the secondary lock

2. Carefully insert the GM TERMINAL EXTRACTOR (P/N 12094430) between the lock and the pin to release the pin.

smr2010-052-003

GM TERMINAL EXTRACTOR (P/N 12094430)

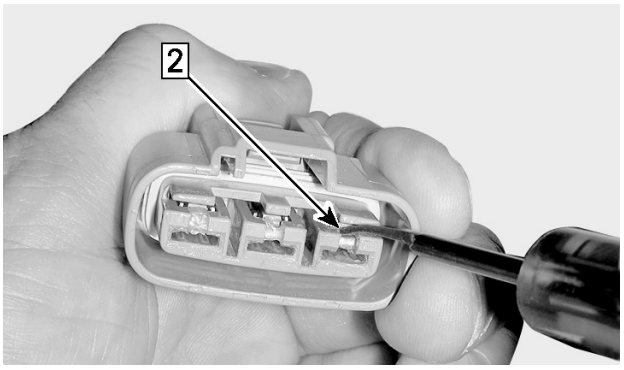

smr2010-050-022_a

Step 2: Insert GM extractor tool (P/N 12094430)

3. Gently pull on the wire to extract the pin out the back of the connector.

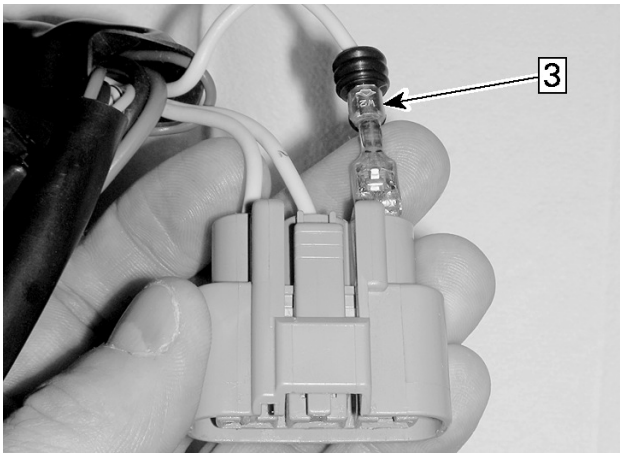

smr2010-050-023_a

Step 3: Pull wire to extract pin

NOTICE **Before installing terminals in the connectors, ensure all terminals are properly crimped on the wires. After installation of the wire terminals in the connectors, ensure they are properly locked by gently pushing on them as if to extract them.**

BATTERY CABLES

Battery Cable Crimping

Carefully strip the wire approximately to 10 mm (3/8 in) in length, using a wire stripping tool or sharp blade/knife.

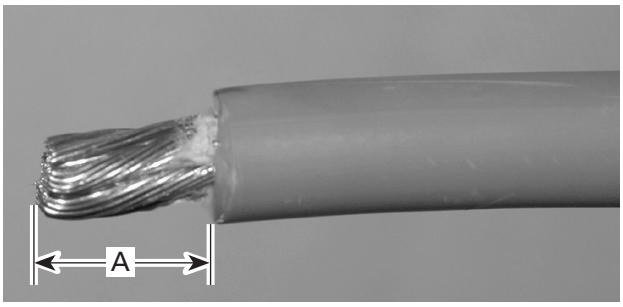

A32E2QA

A. 10 mm (3/8 in)

NOTE: Make sure not to cut wire strands while stripping the wire.

Install the appropriate terminal on the wire according to the requirement. Refer to appropriate *PARTS CATALOG*.

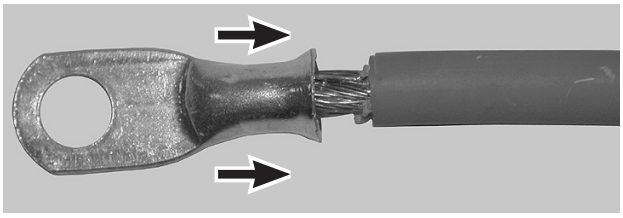

A32E2RA

INSTALLATION OF TERMINAL

Follow the instructions provided with the CRIMPING TOOL (HEAVY GAUGE WIRE) (P/N 529 035 730) to select the proper position of the tool.

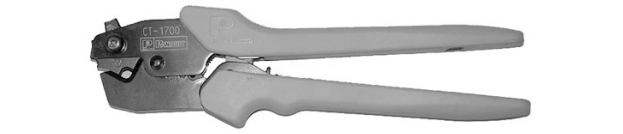

529035730

NOTE: Different wires require different crimping pliers settings, so make sure to follow the instruction supplied with the tool.

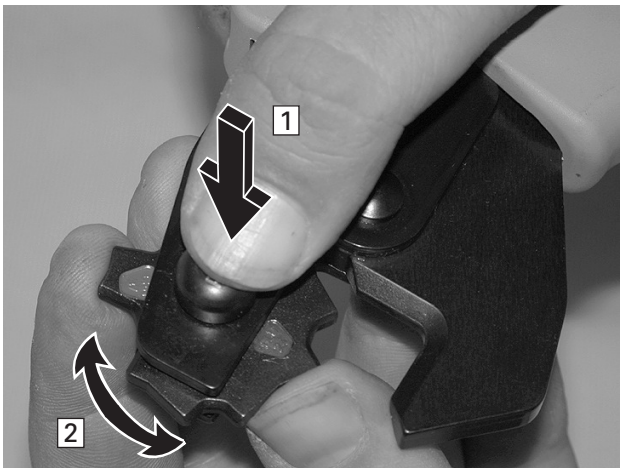

A32E2SA

POSITIONING THE CRIMPING PLIERS
Step 1: Press
Step 2: Rotate

After positioning the crimping pliers, crimp the terminal already installed on wire.

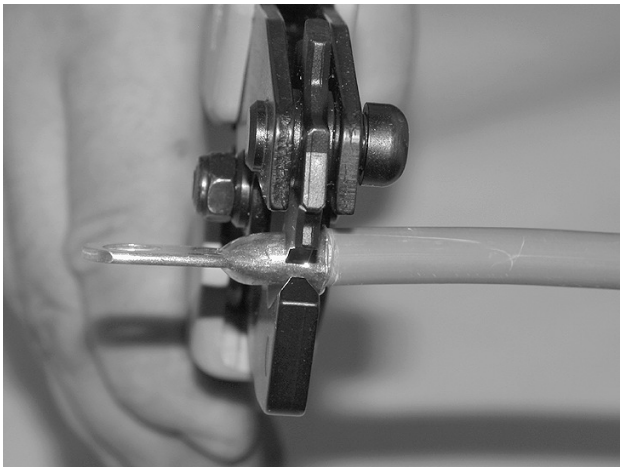

A32E2TA

CRIMPING OF WIRE

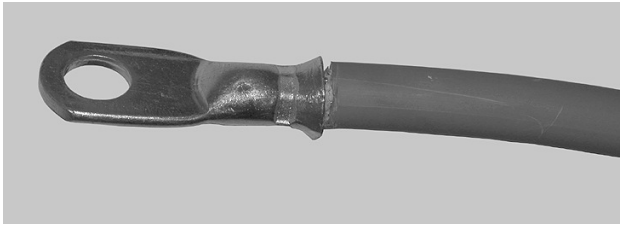

A32E2UA

PROPERLY CRIMPED WIRE

To verify, if the wire is properly crimped, apply some pulling force on wire and the terminal at the same time from both directions.

NOTICE **Never weld the wire to the terminal. Welding can change the property of the wire and it can become brittle and break.**

Install the protective heat shrink rubber tube on the terminal. Heat the heat shrink rubber tube using the heat gun so that it grasps the wire and the terminal.

NOTICE **Make sure that the protective heat shrink rubber tube has been properly installed and no part of wire is exposed.**

2016 SEA-DOO
1503 4-TEC SERIES

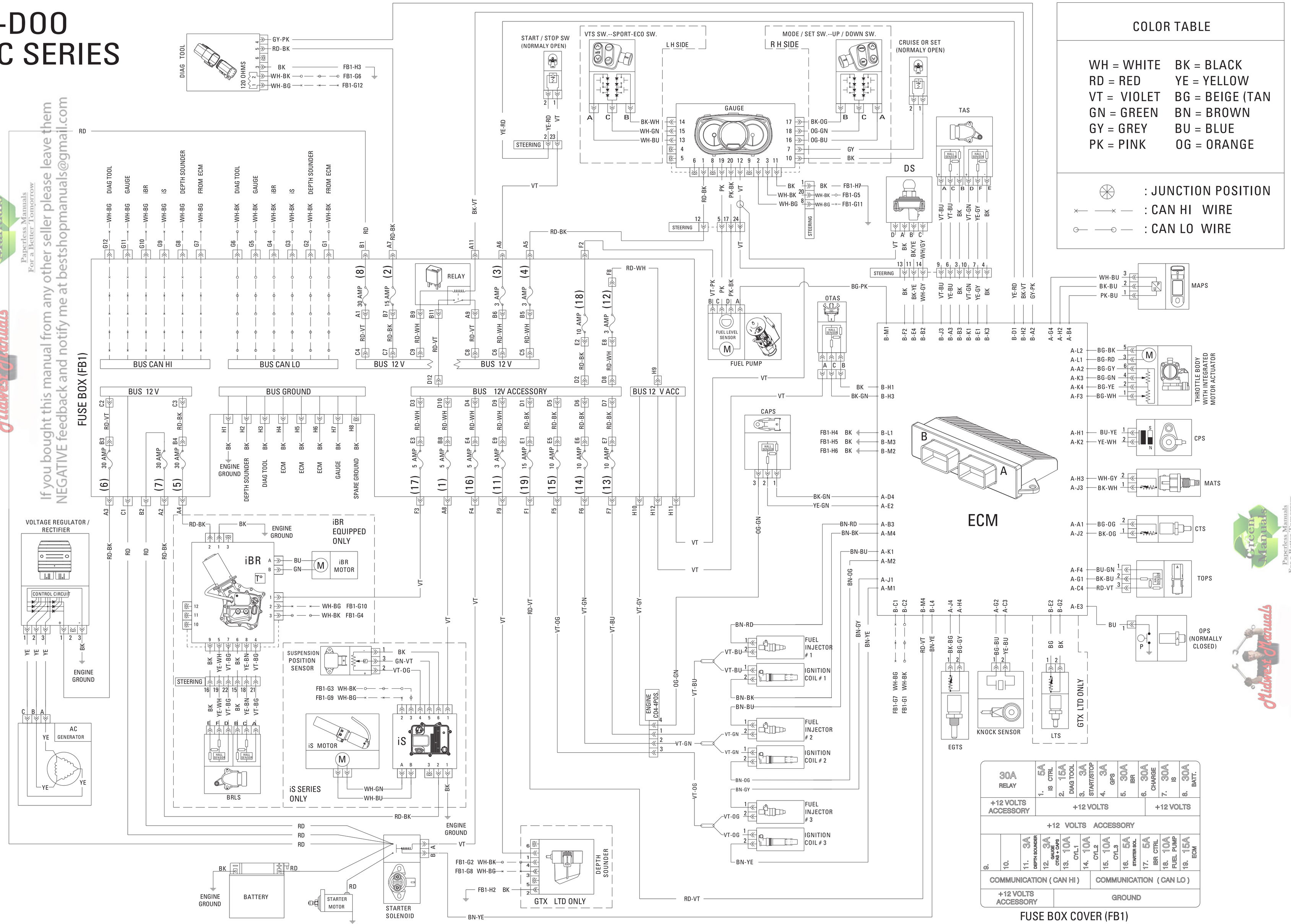

COLOR TABLE

WH = WHITE	BK = BLACK
RD = RED	YE = YELLOW
VT = VIOLET	BG = BEIGE (TAN
GN = GREEN	BN = BROWN
GY = GREY	BU = BLUE
PK = PINK	OG = ORANGE

: JUNCTION POSITION
: CAN HI WIRE
: CAN LO WIRE

30A RELAY	1. 5A IS CTRL	2. 15A DIAG TOOL	3. 3A START/STOP	4. 3A GPS	5. 30A IBR	6. 30A CHARGE	7. 30A IS	8. 30A BATT.
+12 VOLTS ACCESSORY	+12 VOLTS						+12 VOLTS	
+12 VOLTS ACCESSORY								
9.	10.	11. 3A DEPTH SOUNDER	12. 3A CHARGE OTAS + CAPS	13. 10A CYL 1	14. 10A CYL 2	15. 10A CYL 3	16. 5A STARTER SOL.	17. 5A IBR CTRL	18. 10A FUEL PUMP	19. 15A ECM
COMMUNICATION (CAN HI)							COMMUNICATION (CAN LO)			
+12 VOLTS ACCESSORY			GROUND							

FUSE BOX COVER (FB1)

sdd2016-001-001

If you bought this manual from any other seller please leave them NEGATIVE feedback and notify me at bestshopmanuals@gmail.com
Paperless Manuals For a Better Tomorrow
Green Manuals
Midwest Manuals

Flat rate times are what the manufacturer pays the authorized dealer for warranty work, the times listed are usually unrealistic for even the most experienced mechanic and will take longer to actually complete.

Because of this dealers will usually charge more than the times posted.

I cannot be held responsible for any errors BRP has made in these service flat rate or parts manuals.

If you bought this manual from any other seller, they could be reselling my work.

Please leave them negative feedback & email me at bestshopmanuals@gmail.com .

Our goal is to be one of the BEST sellers on the internet by providing you with the BEST customer service and the BEST manuals on the market.

Thank you for choosing us.

Green-Manuals

Paperless Manuals
For a Better Tomorrow

SEARCHABLE MANUAL

Midwest Manuals

SEA-DOO®

BRP

2016

Volume 3

Flat Rate
Time Schedule

Série

GTX™, GTX™ iS, RXT™, RXT™ aS, WAKE™

Series

Effective June 26th, 2016

En vigueur le 26 juin 2016

Subject to review from time to time without notice or delay.

Sujet à révision sans préavis, ni délais.

INTRODUCTION

This publication governs all warranty labor allowances for 2016 BRP Sea-Doo.

1. HOW DOES IT WORK

We follow the procedures detailed in the BRP *Sea-Doo Shop Manual*. The flat rate time is the maximum time allowed for a repair involving any given part. **FLAT RATE TIME IS NOT CUMULATIVE.** You must use the flat rate time given for the longest lasting operation.

NOTE: The *Flat Rate Time Schedule* was prepared by skilled mechanics using the hand tool usually found in workshops and all the special tools mentioned in the *Shop Manual*.

2. COMPILATION

The *Flat Rate Time Schedule* is compiled as follows:

The actual required time to perform the repair plus (+) 30% correction factor up to 3.0 hours or (+) 15% over 3.0 hours time to take into account, among others:

- Vehicle handling
- Obtaining the parts
- Diagnosis
- Cleaning
- Special compensation (rusted bolts).

3. HOW TO USE IT

Refer to the system you need, locate part of series of parts replaced. List JOB CODE in the appropriate column on claim.

SYSTEM		PAGE
01	ENGINE	04
02	CARBURETOR AND FUEL SYSTEM	11
03	IGNITION SYSTEM	17
04	STARTER	19
05	TRANSMISSION SYSTEM	21
06	BRAKE SYSTEM	28
07	STEERING SYSTEM AND FRONT SUSPENSION	30
08	REAR SUSPENSION SYSTEM AND TRACK	35
09	BODY	41
10	ELECTRICAL SYSTEM	53

NOTE: Unless otherwise specified, dismantling order is: top to bottom, exterior to interior, front to rear.

All fractions of hours are in tenths:

0.1 = 6 minutes
0.2 = 12 minutes, and so on

LEGEND:

* REQUIRES PRIOR AUTHORIZATION BY DISTRIBUTOR.
** INDICATE LABOUR TIME ON LINE "LABOUR ONLY" OF CLAIM.
*** INDICATE $$$ AMOUNT ON "SUB-CONTRACTED LABOUR" OF CLAIM.

IMPORTANT: Always use the longest flat rate time applicable to the repair performed.

4. JOB REQUIREMENTS

All the flat rate times mentioned in the following pages include the required operations such as: engine timing (rotary valve and ignition), connecting rod(s) alignment, cylinder head(s) torque or use of parallel bar, use of ignition tester, piston clearance/ring end gap measurement, crankshaft to crankcase measurement, cylinder honing, engine leak test.

5. ILLUSTRATIONS

The illustrations contained in this manual do not necessarily show every components of a given system as *Parts Catalog* do. Their purpose is to facilitate recognition of parts related to a flat rate time. **Item numbers on illustrations correspond to the four digit Job Code.**

6. FLAT RATE TIME SUGGESTION

SEND A WARRANTY CASE ON BOSSWeb INFO CENTER

In the case, you must provide the following information:

Section *Subject*:

- Flat rate time suggestion

Section *Your Question*:

- Model year;
- Model description;
- Description job code;
- Job code;
- Present flat rate;
- Suggested flat rate;
- Detailed repair procedure;

To ensure that your case will be promptly and efficiently processed please indicate the step by step repair procedure you performed.

INTRODUCTION

Cette publication détermine le temps de main-d'oeuvre couvert par la garantie pour les motomarines BRP 2016.

1. UTILISATION DU MANUEL

En procédant de la façon indiquée dans le *Manuel de réparation motomarines* BRP, chaque temps donné représente le maximum permis pour une réparation portant sur cette pièce. LES TEMPS NE SONT PAS CUMULATIFS. On doit inscrire le temps donné pour l'opération qui prend le plus de temps.

REMARQUE: Le *Barème de temps à taux fixe* a été préparé par des mécaniciens compétents utilisant les outils que l'on retrouve normalement dans les ateliers de réparation, en plus de tous les outils spéciaux mentionnés dans le *Manuel de réparation*.

2. COMPILATION

Le *Barème de temps à taux fixe* a été établi en compilant le temps nécessaire pour faire la réparation plus (+) un facteur de correction de 30% lorsqu'un travail dure 3.0 heures et moins, ou (+) 15% lorsqu'un travail dure plus de 3.0 heures. Cette compilation comprend, entre autres, les étapes suivantes:

- Manutention du véhicule
- Nettoyage
- Aller chercher les pièces, essais physiques
- Compensation spéciale (boulons rouillés)
- Diagnostic.

3. UTILISATION DU BARÈME

Se reporter à la section désirée, repérer la pièce ou l'ensemble de pièces remplacées et inscrire le CODE DE TRAVAIL dans la colonne appropriée sur la formule de réclamation.

SYSTÈME		PAGE
01	MOTEUR	4
02	CARBURATEUR ET SYSTÈME D'ALIMENTATION D'ESSENCE	11
03	SYSTÈME D'ALLUMAGE	17
04	DÉMARREUR	19
05	SYSTÈME DE TRANSMISSION	21
06	SYSTÈME DE FREIN	28
07	SYSTÈME DE DIRECTION ET SUSPENSION AVANT	30
08	SYSTÈME DE SUSPENSION ARRIÈRE ET CHENILLE	35
09	CARROSSERIE	41
10	SYSTÈME ÉLECTRIQUE	53

REMARQUE: Sauf indication contraire, le démontage doit s'effectuer de haut en bas, de l'extérieur vers l'intérieur, de l'avant vers l'arrière.

Toutes les fractions d'heures sont exprimées en dixièmes:

0.1 = 6 minutes
0.2 = 12 minutes, et ainsi de suite

LÉGENDE:

* AUTORISATION REQUISE AVANT LE REMPLACEMENT.
** INSCRIRE LE TEMPS À LA LIGNE «MAIN-D'OEUVRE SEULEMENT».
*** INSCRIRE LE MONTANT $$$ À LA LIGNE «OUVRAGE SOUS-CONTRACTÉ».

IMPORTANT: Toujours utiliser le temps donné à l'opération qui nécessite le plus de temps.

4. TRAVAUX REQUIS

Tous les temps mentionnés dans les pages suivantes incluent les opérations telles que: réglage du moteur (valve rotative et allumage), alignement de la ou des bielles, couple de serrage de la ou des culasses ou l'utilisation de barres parallèles, utilisation du vérificateur d'allumage, mesure du jet des pistons/jeu en bout des segments, mesure de l'écart entre le vilebrequin et le carter, rectification du cylindre, vérification de fuite du moteur.

5. ILLUSTRATIONS

Contrairement aux *Catalogues de pièces*, les illustrations de ce manuel ne montrent pas nécessairement chacune des pièces qu'elles représentent, leur raison d'être étant plutôt de faciliter la reconnaissance des pièces reliées à un barème de temps à taux fixe. **Les numéros d'items sur les illustrations correspondent aux quatre derniers chiffres du code de travail.**

6. SUGGESTION DE BARÈME DE TEMPS À TAUX FIXE

ENVOYEZ UNE REQUÊTE GARANTIE BOSSWeb DEPUIS LA SECTION INFO CENTRE

Dans cette requête, vous devez fournir les informations suivantes:

Section *Objet*:

- Suggestion de barème de temps à taux fixe

Section *Votre Question*:

- L'année modèle;
- Description du modèle;
- Description du code de travail;
- Code de travail;
- Temps actuel;
- Temps suggéré;
- Détails de la marche à suivre;

Pour s'assurer que votre demande sera traitée dans les plus brefs délais et efficacement, s.v.p. nous fournir toutes les étapes de réparation dans les détails de la marche à suivre.

2016

Liquid Cooled Engines — Moteurs refroidis par liquide

TABLE	DESCRIPTION	MODEL/ MODÈLE	ENGINE/ MOTEUR	INTERCOOLER/ REFROIDISSEUR	SUSPENSION	iBR
6	GTX 155	38GA/38GB	1503 ROTAX	N/A	N/A	STD
7	GTX LTD 215	44GA/44GB	1503 ROTAX	STD	N/A	STD
	WAKE PRO 215	26GA/26GB				
8	RXT 260	17GA/17GB	1503 ROTAX	STD	N/A	STD
9	GTX S 155	33GA/33GB	1503 ROTAX	N/A	STD	STD
10	GTX iS LTD 260	18GA/18GB	1503 ROTAX	STD	STD	STD
	RXT aS X 260	41GA/41GB				
11	GTX LTD 300	45GA/45GB	1630 ROTAX	STD	N/A	STD
	RXT X 300	31GA/31GB 31GC/31GD				

STD: STANDARD

SYSTEM SYSTÈME	CODE	DESCRIPTION	GTX 6	GTX / WAKE 7	RXT 8	GTX S 9	GTX iS / RXT aS 10	GTX / RXT X 11
01	00	**NO LABOR INVOLVED** **AUCUNE MAIN-D'OEUVRE**	**0**	**0**	**0**	**0**	**0**	**0**
01	01	MUFFLER, HOSE, STRAP, RUBBER STRIP SILENCIEUX, BOYAU, SANGLE, BANDE CAOUTCHOUC	0.9	0.9	0.9	1.0	1.0	0.9
01	05	EXHAUST MANIFOLD AND/OR BOLT(S) COLLECTEUR D'ÉCHAPPEMENT ET/OU BOULON(S)	1.2	1.8	1.8	1.8	1.8	1.8
01 *	08	ENGINE (ASS'Y) REMOVAL AND INSTALLATION DÉPOSE ET INSTALLATION DU MOTEUR (COMPLET)	3.6	4.0	4.0	4.0	4.0	4.0
01	12	TEMPERATURE SENSOR CAPTEUR DE TEMPÉRATURE	0.3	0.3	0.3	0.3	0.3	0.3
01	14	CYLINDER HEAD CULASSE	4.5	5.2	5.2	5.2	5.2	5.2
01	36	EXHAUST OUTLET SORTIE D'ÉCHAPPEMENT	0.4	0.4	0.4	0.4	0.4	0.4
01	37	SHORT BLOCK ENSEMBLE CARTER-CYLINDRES	6.9	7.5	7.5	7.5	7.5	7.5
01	43	BALANCE SHAFT (ASS'Y) ARBRE D'ÉQUILIBRAGE (COMPLET)	6.8	7.3	7.3	7.3	7.3	7.3
01	48	COVER MUFFLER (FRONT) COUVRE SILENCIEUX (AVANT)	1.0	1.0	1.0	1.0	1.0	1.0
01	52	RESONATOR (RIGHT) RÉSONATEUR (DROIT)	0.5	0.5	0.5	4.0	4.2	1.1
01	53	MUFFLER SUPPORT SUPPORT DU SILENCIEUX	1.1	1.1	1.1	1.3	1.3	1.1
01	56	ENGINE RUBBER MOUNTS (REAR OR FRONT) (EACH) TAMPON D'ANCRAGE MOTEUR (AVANT OU ARRIÈRE) (CHACUN)	0.8	0.8	0.8	1.5	1.5	0.8
01	57	REAR ENGINE SUPPORT SUPPORT MOTEUR ARRIÈRE	0.9	0.9	0.9	1.6	1.6	0.9
01	61	HOSE (FROM PUMP SUPPORT TO HEAD PIPE ASS'Y) BOYAU DU SUPPORT DE POMPE AU TUYAU COLLECTEUR (COMPLET)	0.3	0.3	0.3	0.9	0.9	0.3
01	63	SENSOR TEMPERATURE (MUFFLER) CAPTEUR DE TEMPERATURE (SILENCIEUX)	0.3	0.3	0.3	0.4	0.4	0.3
01	65	NOISE SENSOR CAPTEUR DE CLIQUETIS	0.9	0.9	0.9	1.6	1.6	0.9
01	82	EXHAUST PIPE TUYAU D'ÉCHAPPEMENT SOUDÉ	0.5	0.5	0.5	0.9	0.9	0.5
01	83	PISTON, RINGS, CIRCLIP, PIN (1) PISTON, SEGMENTS, ANNEAU DE RETENUE, GOUPILLE (1)	7.0	7.4	7.4	7.5	7.5	7.4
01	84	PISTON, RINGS, CIRCLIP, PIN (2) PISTON, SEGMENTS, ANNEAU DE RETENUE, GOUPILLE (2)	7.2	7.6	7.6	7.7	7.7	7.6
01	85	PISTON, RINGS, CIRCLIP, PIN (3) PISTON, SEGMENTS, ANNEAU DE RETENUE, GOUPILLE (3)	7.4	7.8	7.8	7.9	7.9	7.8

SYSTEM SYSTÈME	CODE	DESCRIPTION	GTX 6	GTX / WAKE 7	RXT 8	GTX S 9	GTX iS / RXT aS 10	GTX / RXT X 11
01	86	INLET HOSE (RADIATOR TO PUMP) BOYAU ENTRÉE D'EAU (RADIATEUR À POMPE)	0.5	0.5	0.5	1.2	1.2	0.5
01	87	WATER OUTLET (ENGINE TO RADIATOR) SORTIE D'EAU (MOTEUR AU RADIATEUR)	0.5	0.5	0.5	1.2	1.2	0.5
01	88	HOSE FROM MUFFLER LEFT TO MUFFLER RIGHT BOYAU DU SILENCIEUX GAUCHE AU SILENCIEUX DROIT	0.3	0.3	0.3	0.5	0.5	0.3
01	89	ENGINE BLOCK (CRANKCASE) ENSEMBLE MOTEUR (CARTER)	8.6	9.0	9.0	9.0	9.1	9.0
01	90	ENGINE BLOCK RESEAL OR SEALANT RESCELLEMENT DU MOTEUR OU SCELLANT	4.7	5.1	5.1	5.2	5.2	5.1
01	92	CRANKSHAFT AND/OR PLAIN BEARING AND/OR RING HALF VILEBREQUIN ET/OU ROULEMENT PLAT ET/OU DEMI-BAGUE	8.1	8.5	8.5	8.6	8.6	8.5
01	93	WATER PUMP HOUSING (ASS'Y) AND/OR GASKET BOÎTIER POMPE À EAU (COMPLET) E.5T/OU JOINT D'ÉTANCHÉITÉ	0.8	1.0	1.0	1.6	1.6	1.0
01	94	COOLING RESERVE RÉSERVOIR ANTIGEL	0.3	0.3	0.3	0.4	0.4	0.3
01	95	RADIATOR AND/OR FITTING RADIATEUR ET/OU RACCORD DROIT	3.0	3.0	3.0	3.2	3.2	3.0
01	96	CAMSHAFT POSITION SENSOR CAPTEUR DE POSITION DE L'ARBRE À CAMES	0.3	0.3	0.3	1.0	1.0	0.4
01	97	VALVE COVER AND/OR GASKET COUVERCLE DE SOUPAPE ET/OU JOINT D'ÉTANCHÉITÉ	0.3	0.3	0.3	0.6	0.6	0.3
01	98	CAMSHAFT ARBRE À CAMES	1.1	1.1	1.1	1.8	1.8	1.1
01	99	CAMSHAFT GUIDE GUIDE DE L'ARBRE À CAMES	0.6	0.6	0.6	1.0	1.0	0.6
01	174	CAMSHAFT CHAIN CHAÎNE DE L'ARBRE À CAMES	8.5	8.5	8.5	8.6	8.6	8.5
01	175	TIMING GEAR PIGNON DE DISTRIBUTION	1.1	1.1	1.1	1.8	1.8	1.1
01	176	ROCKER ARM (ASS'Y) AXE DE CULBUTEUR (COMPLET)	0.6	0.6	0.6	1.0	1.0	0.6
01	177	EXHAUST VALVE, SPRINGS, SEAL, GUIDE (1) SOUPAPE D'ÉCHAPPEMENT, RESSORTS, JOINT, GUIDE (1)	1.7	1.7	1.7	2.4	2.4	1.7
01	178	INTAKE VALVE, SRINGS, SEAL, GUIDE (1) SOUPAPE D'ADMISSION, RESSORTS, JOINT, GUIDE (1)	1.7	1.7	1.7	2.4	2.4	1.7
01	179	CHAIN GUIDE GUIDE DE CHAÎNE	0.4	0.4	0.4	0.8	0.8	0.4
01	180	OUTPUT SLEEVE, SEAL, STOP SLEEVE MANCHON DE DÉBIT, JOINT, ARRÊT DU MANCHON	1.7	2.4	2.4	2.4	3.0	2.4
01	181	SEAL (OUTPUT SLEEVE) JOINT (MANCHON DE DÉBIT)	1.0	1.8	1.8	1.7	2.4	1.8

SYSTEM SYSTÈME	CODE	DESCRIPTION	GTX	GTX / WAKE	RXT	GTX S	GTX iS / RXT aS	GTX / RXT X
			6	7	8	9	10	11
01	182	OIL RADIATOR AND/OR O-RING RADIATEUR D'HUILE ET/OU JOINT TORIQUE	3.7	3.7	3.7	4.4	4.4	3.7
01	183	OIL PUMP COVER AND/OR SHAFT AND/OR ROTOR (REAR) COUVERCLE DE LA POMPE À L'HUILE ET/OU ARBRE ET/OU ROTOR (ARRIÈRE)	2.4	3.2	3.2	4.5	4.5	3.2
01	184	OIL PUMP HOUSING AND/OR ALL PARTS (FRONT) BOÎTIER DE LA POMPE À L'HUILE ET/OU TOUTES LES PIÈCES (AVANT)	1.2	1.2	1.2	1.9	1.9	1.2
01	186	OIL SEPARATOR HOUSING AND/OR GASKET BOÎTIER SÉPARATEUR D'HUILE ET/OU JOINT D'ÉTANCHÉITÉ	0.7	0.7	0.7	0.7	0.7	
01	189	OIL PRESSURE SWITCH INTERRUPTEUR DE PRESSION D'HUILE	0.6	0.6	0.6	1.3	1.3	0.6
01	190	PTO HOUSING AND/OR GASKET BOÎTIER PDM ET/OU JOINT D'ÉTANCHÉITÉ	2.7	3.5	3.5	4.4	4.8	3.5
01	191	CHAIN TENSION GUIDE GUIDE DE TENSION DE CHAÎNE	5.4	5.8	5.8	5.9	5.9	5.8
01	192	CHAIN TENSIONER (ASS'Y) TENDEUR DE CHAÎNE (COMPLET)	0.3	0.3	0.3	0.7	0.7	0.3
01	193	OIL SIEVE (PTO) TAMIS D'HUILE (PDM)	2.1	3.1	3.1	3.8	3.8	3.1
01	194	OIL FILTER AND/OR O-RING FILTRE À HUILE ET/OU JOINT TORIQUE	0.3	0.3	0.3	0.3	0.3	0.3
01	195	VALVE SEAT SLEEVE, PISTON, SPRING, PLUG AND O-RING MANCHON DE SIÈGE DE SOUPAPE, PISTON, RESSORT, BOUCHON ET JOINT TORIQUE	2.2	3.2	3.2	3.9	3.9	3.2
01	216	PRESSURE CAP BOUCHON DE RADIATEUR	0.3	0.3	0.3	0.3	0.3	0.3
01	250	CRANKSHAFT POSITION SENSOR (CPS) CAPTEUR POSITION DU VILEBREQUIN (CPV)	0.6	0.6	0.6	1.2	1.2	0.6
01	251	PRESSURE VALVE (ASS'Y) SOUPAPE DE PRESSURISATION (COMPLET)	0.3	0.3	0.3	0.3	0.3	0.3
01	253	INJECTOR (ONE OR ALL) INJECTEUR (UN OU TOUS)	0.4	0.4	0.4	0.4	0.4	0.4
01	255	EXHAUST/INLET VALVES AND/OR SPRINGS AND/OR SEALS (4) VALVES D'ÉCHAPPEMENT/D'ADMISSION ET/OU RESSORTS ET/OU ANNEAUX (4)	2.2	2.2	2.2	2.9	2.9	2.2
01	256	EXHAUST/INLET VALVES AND/OR SPRINGS AND/OR SEALS (8) VALVES D'ÉCHAPPEMENT/D'ADMISSION ET/OU RESSORTS ET/OU ANNEAUX (8)	2.6	2.6	2.6	3.3	3.3	2.6
01	257	EXHAUST/INLET VALVES AND/OR SPRINGS AND/OR SEALS (12) VALVES D'ÉCHAP./D'ADMISSION. ET/OU RESSORTS ET/OU ANNEAUX (12)	3.0	3.0	3.0	3.7	3.7	3.0
01	260	COOLANT HOSE (WATER PUMP HOUSING TO ENGINE) BOYAU DE REFROIDISSEMENT (BOÎTIER DE LA POMPE À EAU AU MOTEUR)	0.5	0.7	0.7	1.3	1.3	0.7
01	264	LONG BLOCK ENSEMBLE CARTER-CYLINDRE-CULASSE	5.0	5.4	5.4	5.4	5.4	5.4

SYSTEM SYSTÈME	CODE	DESCRIPTION	GTX	GTX / WAKE	RXT	GTX S	GTX iS / RXT aS	GTX / RXT X
			6	7	8	9	10	11
01	301	WATER PUMP DYNAMIC SEAL AND/OR OIL SEAL ANNEAU D'ÉTANCHÉITÉ DYNAMIQUE POMPE À EAU ET/OU ANNEAU D'ÉTANCHÉITÉ D'HUILE	2.4	3.2	3.2	3.5	3.9	3.2
01	308	CYLINDER HEAD GASKET JOINT D'ÉTANCHÉITÉ DE LA CULASSE	1.1	1.1	1.1	1.8	1.8	1.1
01	341	BOIL OUT PROCEDURE PROCÉDURE MOTEUR INONDÉ	3.0	3.0	3.0	3.0	3.0	3.0
01	344	BALL BEARINGS WITH BELLOW SOUFFLET ET ROULEMENTS À BILLE	1.0	1.9	1.9	2.7	2.7	1.9

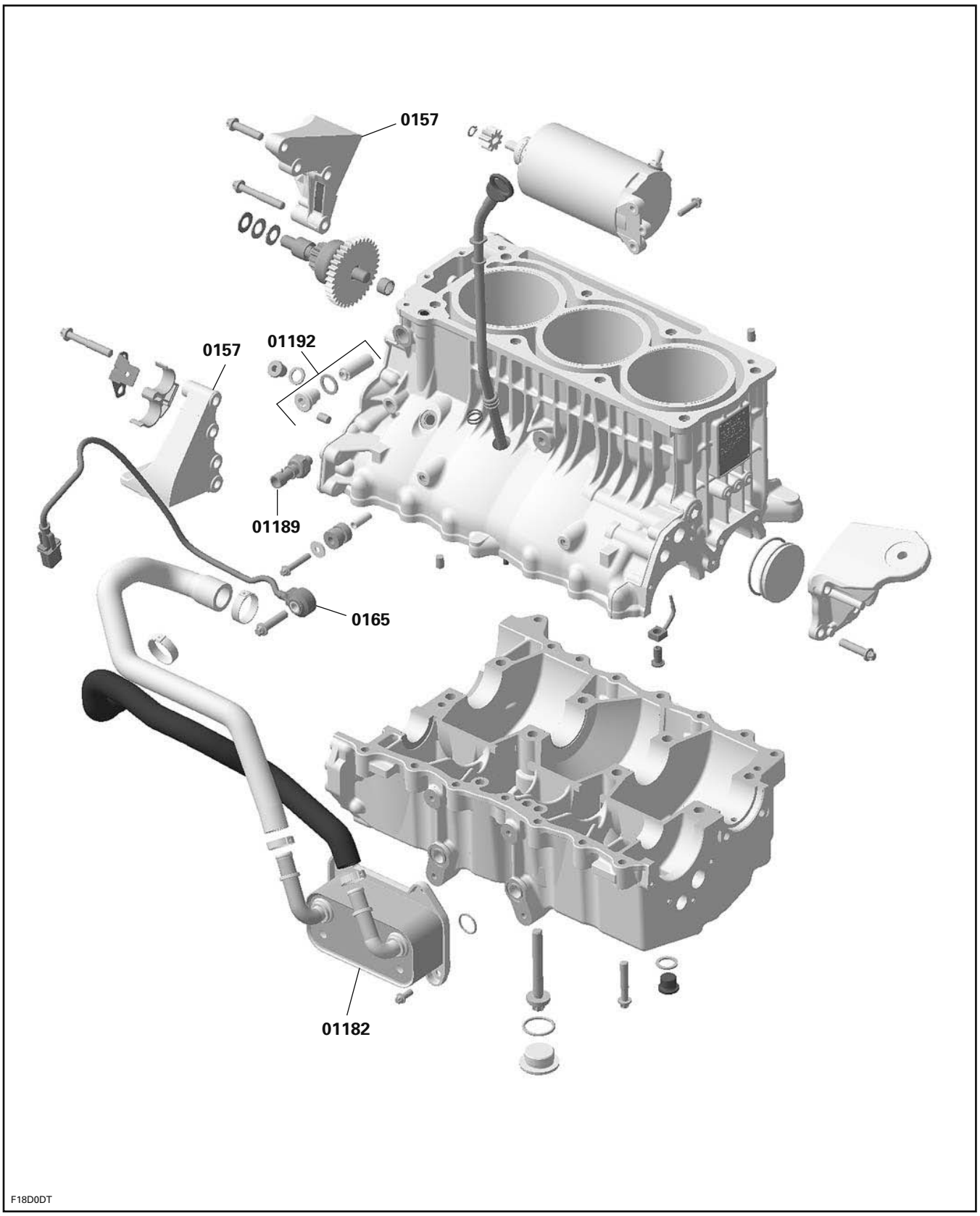
0157
0157
01192
01189
0165
01182
F18D0DT

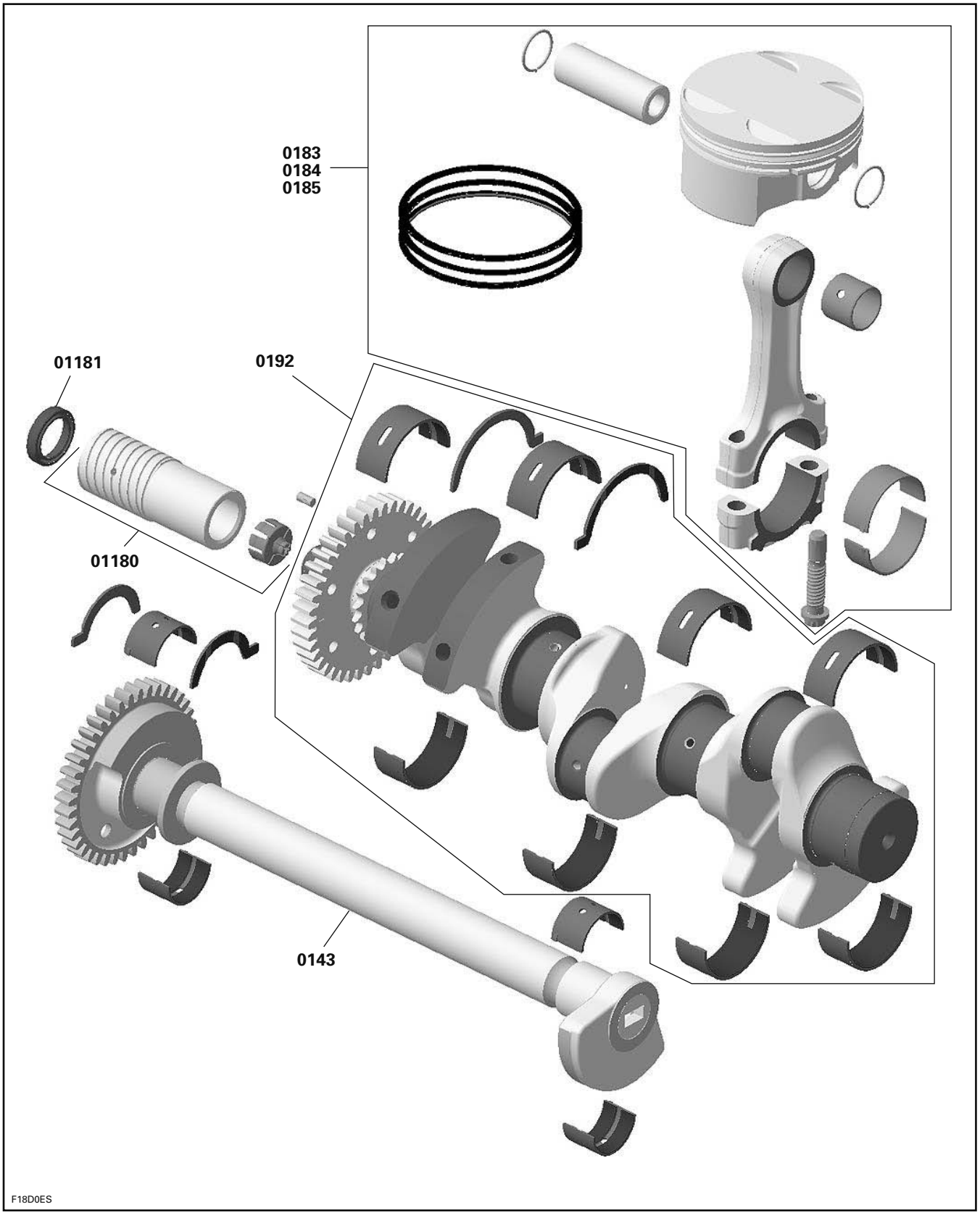
0183
0184
0185
01181
0192
01180
0143
F18D0ES

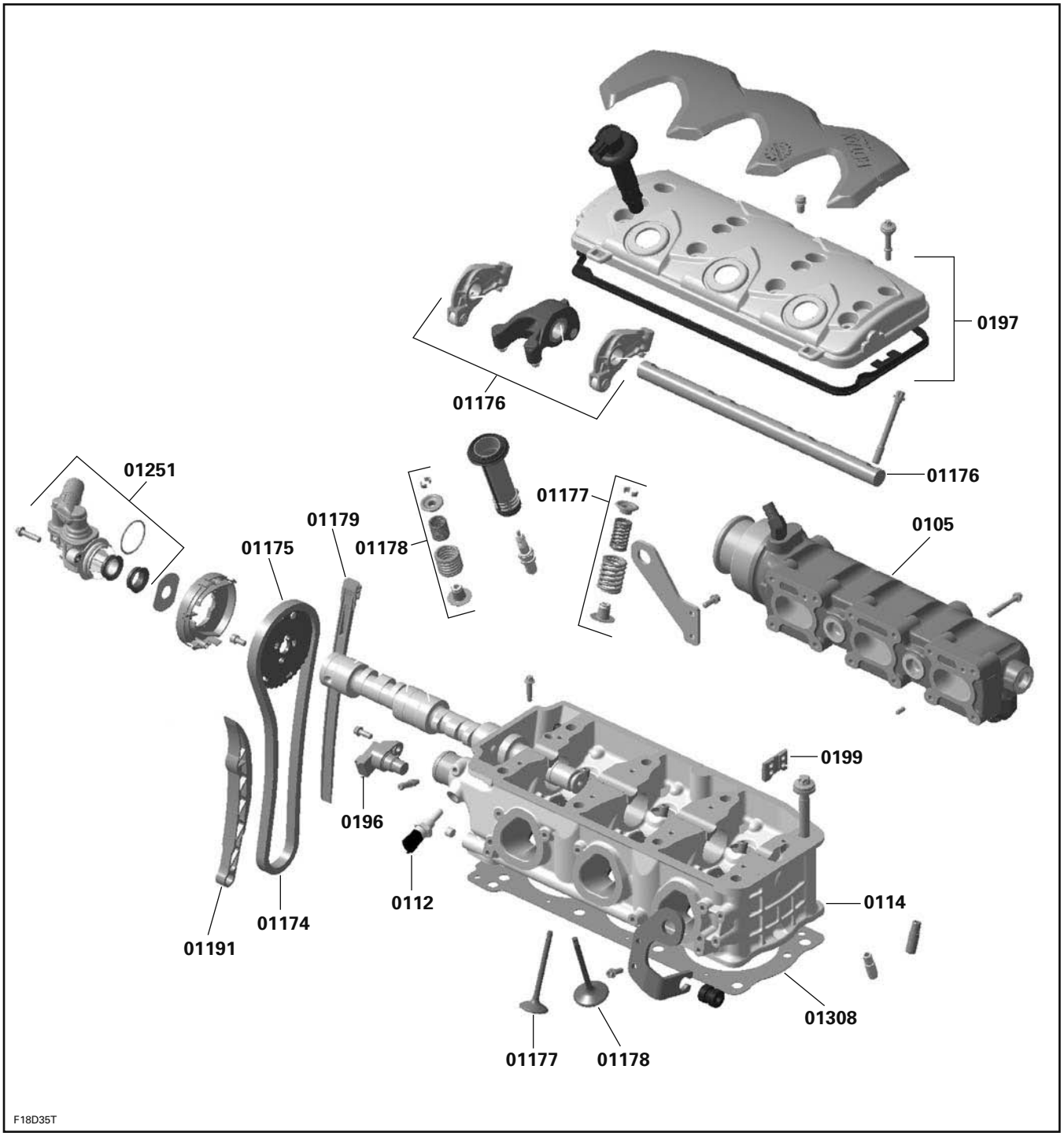
0197
01176
01176
01251
01177
01179
01178
01175
0105
0199
0196
0112
0114
01174
01191
01308
01177
01178
F18D35T

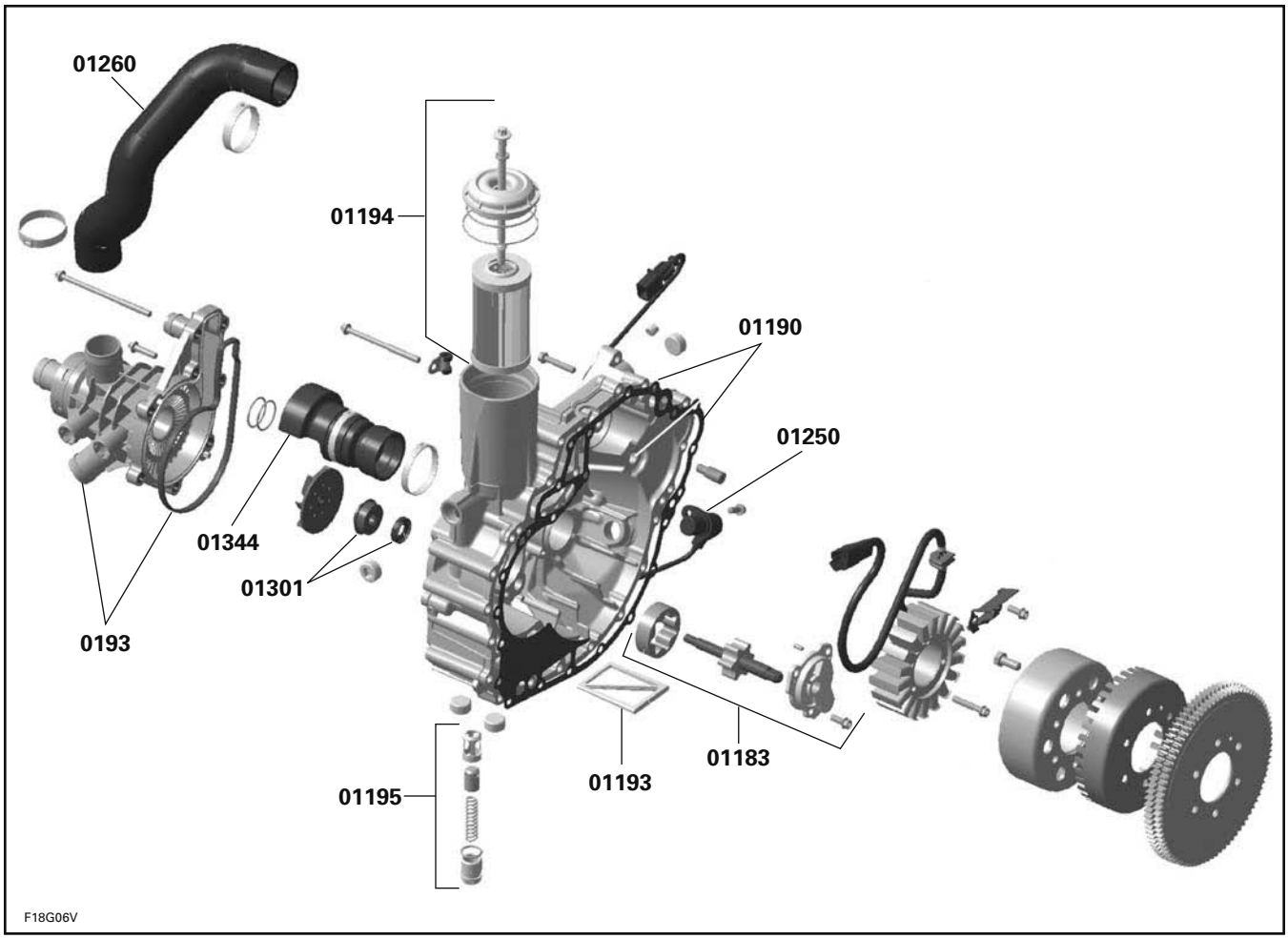
01260
01194
01190
01250
01344
01301
0193
01183
01193
01195
F18G06V

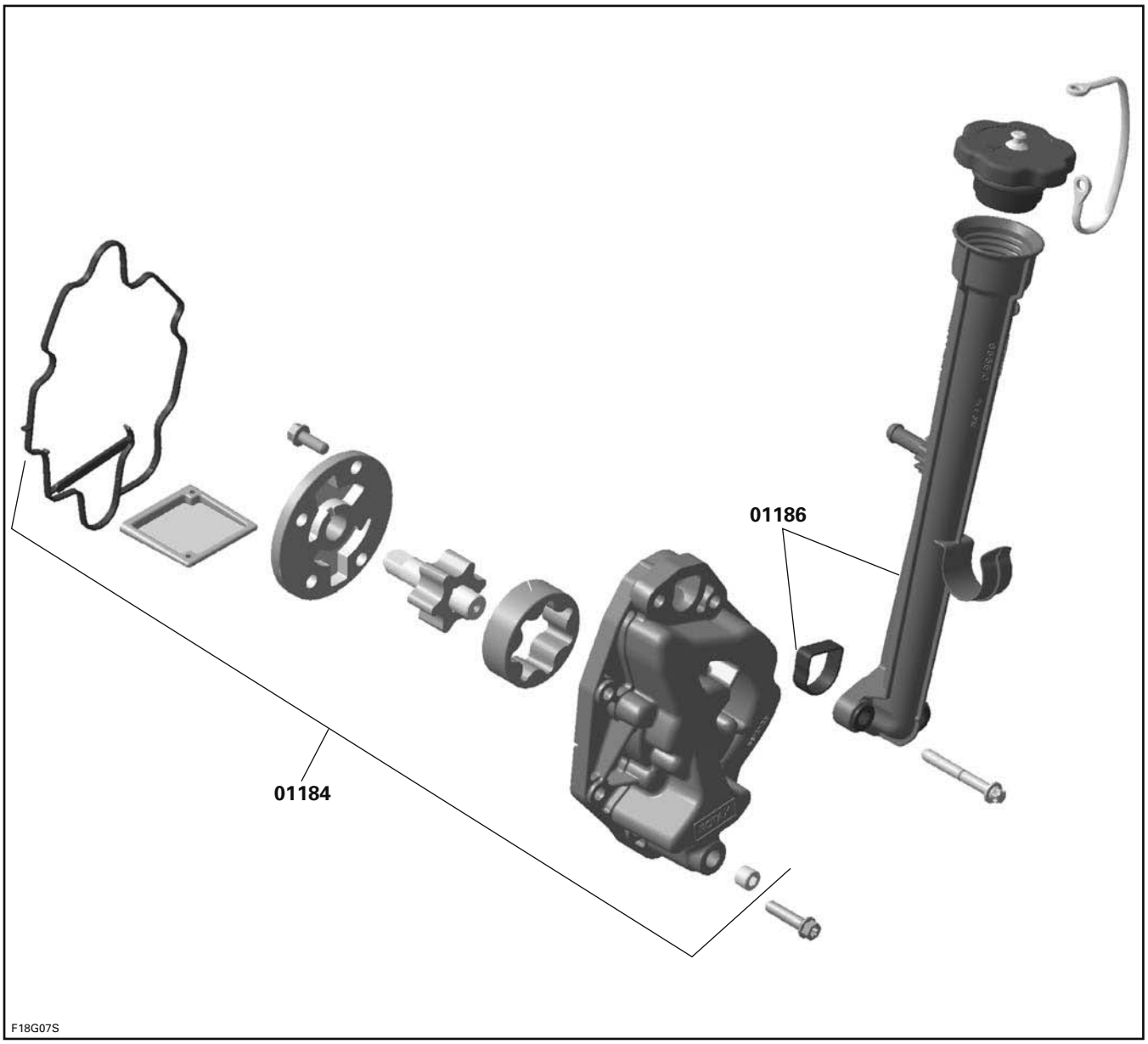
01186
01184
F18G07S

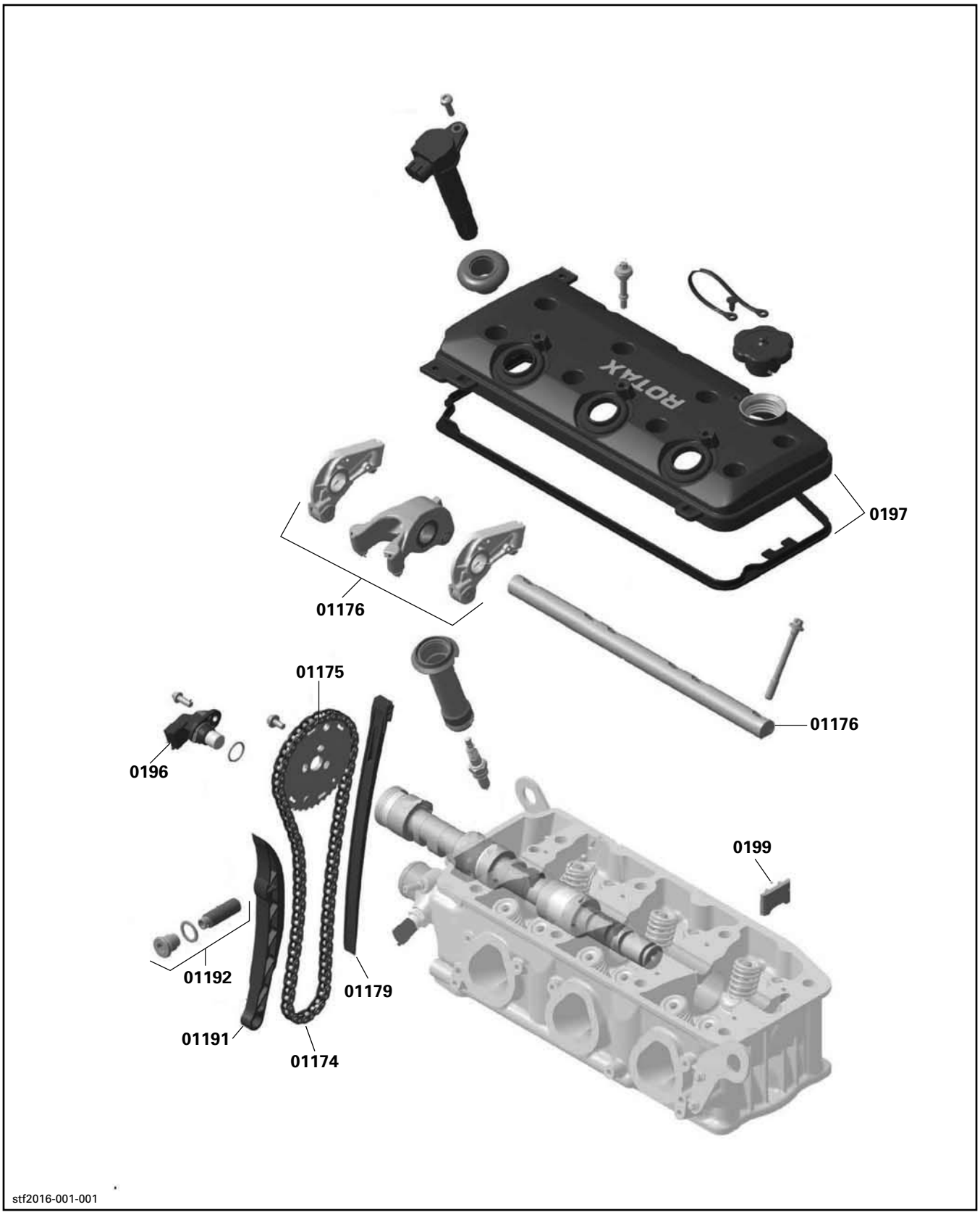
ROTAX
0197
01176
01176
01175
0196
0199
01192
01179
01191
01174
stf2016-001-001

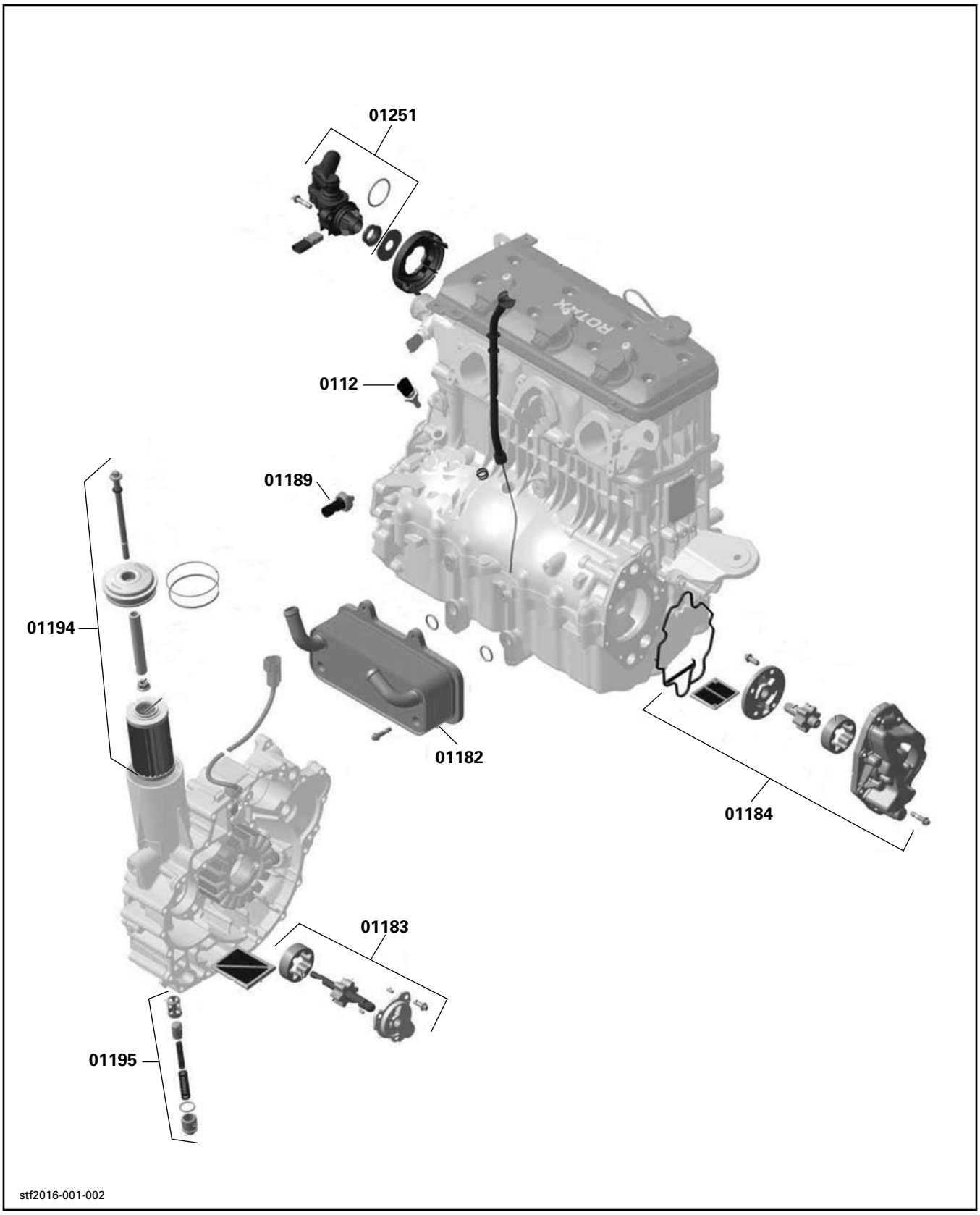
01251
0112
01189
01194
01182
01184
01183
01195
stf2016-001-002

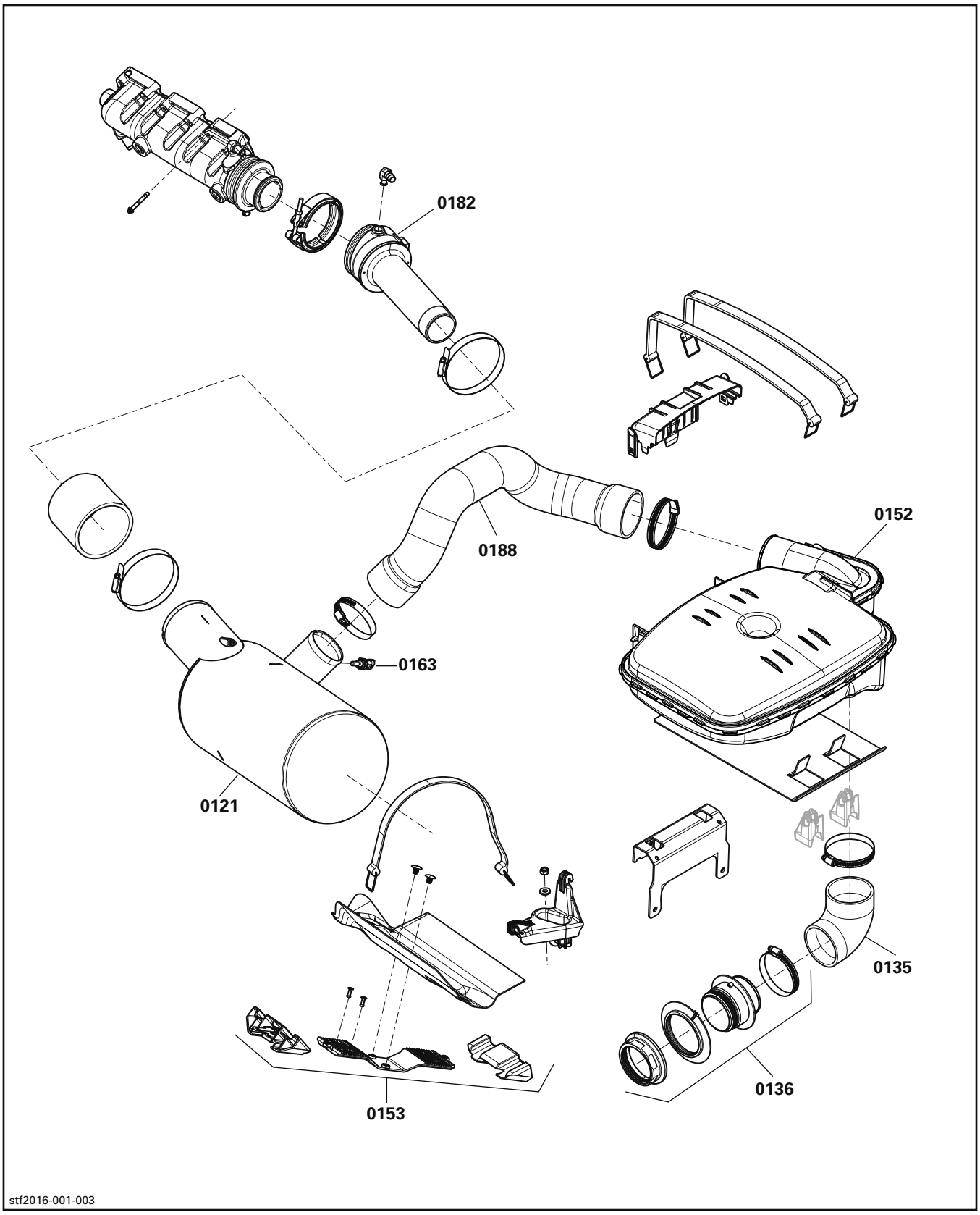
0182
0188
0152
0163
0121
0135
0136
0153
stf2016-001-003

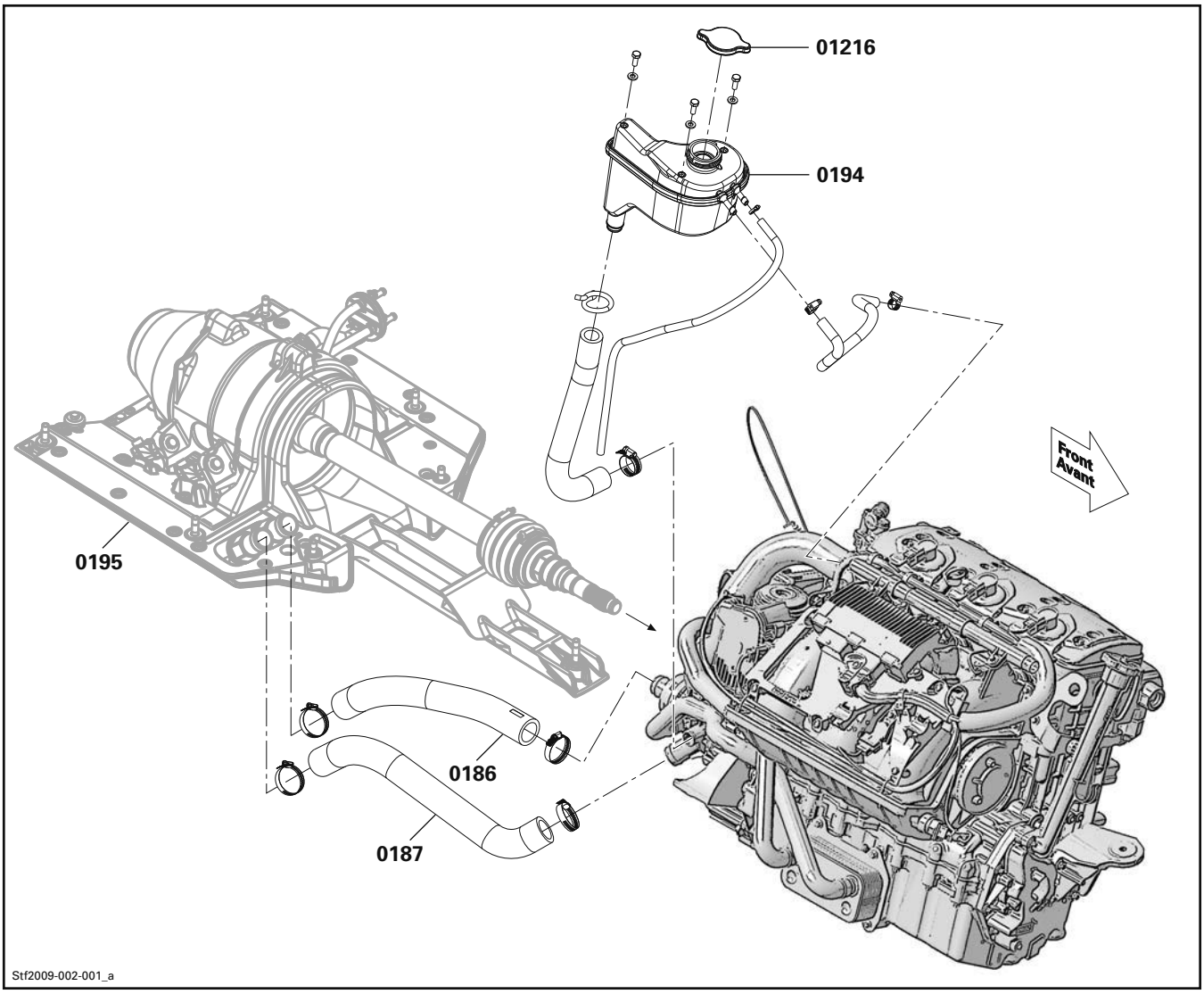
01216
0194
0195
0186
0187
Front
Avant
Stf2009-002-001_a

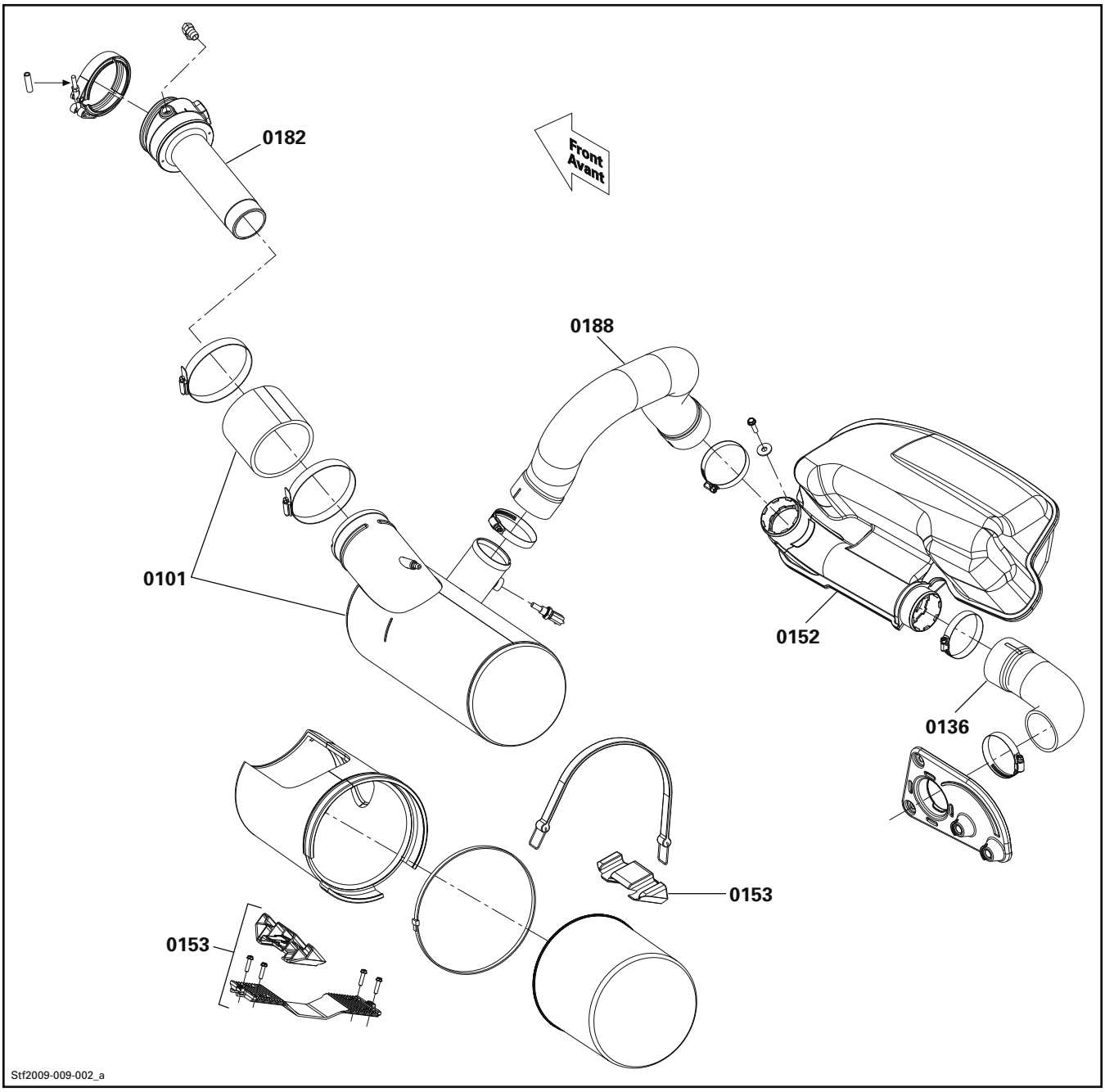
0182
Front
Avant
0188
0101
0152
0136
0153
0153
Stf2009-009-002_a

FUEL SYSTEM
SYSTÈME D'ESSENCE

SYSTEM SYSTÈME	CODE	DESCRIPTION	GTX	GTX / WAKE	RXT	GTX S	GTX iS / RXT aS	GTX / RXT X
			6	7	8	9	10	11
02	00	**NO LABOR INVOLVED** **AUCUNE MAIN-D'OEUVRE**	**0**	**0**	**0**	**0**	**0**	**0**
02	01	REMOVAL AND/OR INSTALLATION OF AIR SILENCER DÉPOSE ET/OU INSTALLATION SILENCIEUX ADMISSION D'AIR	0.3	0.3	0.3	0.9	0.9	0.3
02	26	FUEL TANK CAP AND/OR SEAL BOUCHON DU RÉSERVOIR À ESSENCE ET/OU ANNEAU	0.3	0.3	0.3	0.3	0.3	0.3
02	27	FUEL TANK FILLER NECK AND/OR GASKET GOULOT DE REMPLISSAGE ET/OU JOINT D'ÉTANCHÉITÉ	0.4	0.4	0.4	0.4	0.4	0.4
02	29	FUEL TANK STRAPS (2 OR 5) SANGLES DU RÉSERVOIR À ESSENCE (2 OU 5)	0.3	0.3	0.3	0.5	0.5	0.3
02	31	FUEL TANK RÉSERVOIR À ESSENCE	4.7	5.0	5.0	6.6	6.6	5.0
02	35	VENT CHECK VALVE (EACH) SOUPAPE D'ARRÊT DU SYSTÈME DE VENTILATION (CHACUNE)	0.3	0.3	0.3	0.3	0.3	0.3
02	36	FUEL TANK HOSE (FROM FILLER NECK TO FUEL TANK) BOYAU À ESSENCE (GOULOT AU RÉSERVOIR)	0.3	0.3	0.3	0.3	0.3	0.3
02	60	AIR SILENCER SUPPORT SUPPORT DU SILENCIEUX D'ADMISSION	0.4	0.4	0.4	0.4	0.4	0.4
02	63	THROTTLE BODY (ASS'Y) CARTER D'ACCÉLÉRATEUR (COMPLET)	0.7	0.7	0.7	0.7	0.7	0.7
02	64	INJECTOR INJECTEUR	0.4	0.4	0.4	0.5	0.5	0.4
02	66	FUEL PUMP MODULE MODULE POMPE À ESSENCE	0.4	0.4	0.4	0.5	0.5	0.4
02	67	FUEL PUMP INLET FILTER FILTRE DU CONDUIT D'ENTRÉE DE POMPE À ESSENCE	0.4	0.4	0.4	0.5	0.5	0.4
02	69	FUEL RAIL RAIL D'ESSENCE	0.3	0.3	0.3	0.5	0.5	0.3
02	73	AIR TEMPERATURE SENSOR (CARBURETOR ADAPTOR) CAPTEUR DE TEMPÉRATURE D'AIR (ADAPTATEUR DE CARBURATEUR)	0.3	0.3	0.3	0.4	0.4	0.3
02	78	FUEL FEEDING HOSE (ASS'Y) BOYAU D'ALIMENTATION D'ESSENCE (COMPLET)	0.3	0.3	0.3	0.6	0.6	0.3
02	84	AIR PRESSURE SENSOR CAPTEUR PRESSION D'AIR	0.3	0.3	0.3	0.8	0.8	0.3
02	85	AIR INTAKE (ASS'Y) ADMISSION D'AIR (COMPLET)	0.8	0.8	0.8	1.2	1.2	0.8
02	87	COMPRESSOR HOUSING AND/OR BOOSTER AND/OR O-RING LOGEMENT DU COMPRESSEUR ET/OU PROPULSEUR ET/OU JOINT TORIQUE		1.2	1.2		1.6	1.2
02	88	COMPRESSOR IMPELLER AND/OR BALL BEARING AND/OR O-RING AND/OR STEP COLLAR TURBINE DE COMPRESSEUR ET/OU ROULEMENT À BILLES ET/OU JOINT TORIQUE ET/OU PALIER		1.3	1.3		1.7	

SYSTEM SYSTÈME	CODE	DESCRIPTION	GTX	GTX / WAKE	RXT	GTX S	GTX iS / RXT aS	GTX / RXT X
			6	7	8	9	10	11
02	89	COMPRESSOR SHAFT (ASS'Y) AND/OR BALL BEARING AXE DE COMPRESSEUR (COMPLET) ET/OU ROULEMENT À BILLES		1.5	1.5		1.9	1.3
02	90	DRIVE GEAR AND/OR NEEDLE PIN AND/OR SPRING WASHER ENGRENAGE D'ENTRAÎNEMENT ET/OU GOUPILLE À AIGUILLE ET/OU RONDELLE RESSORT		1.2	1.2		1.6	1.2
02	91	INTERCOOLER AND/OR O-RING REFROIDISSEUR ET/OU JOINT TORIQUE		0.9	0.9		0.6	0.6
02	92	INTERCOOLER SUPPORT AND/OR ALL PARTS SUPPORT DU REFROIDISSEUR ET/OU TOUTES LES PIÈCES					0.7	
02	93	FUEL PUMP NUT AND/OR GASKET ÉCROU DE LA POMPE À ESSENCE ET/OU JOINT D'ÉTANCHÉITÉ	0.4	0.4	0.4	0.5	0.5	0.4
02	94	HOSE (BOOSTER INLET) BOYAU (ENTRÉE DU PROPULSEUR)		0.3	0.3	0.5	0.5	0.3
02	96	HOSE (BOOSTER OUTLET) BOYAU (SORTIE DU PROPULSEUR)			0.3		0.5	0.3
02	97	HOSE (THROTTLE BODY INLET) BOYAU (ENTRÉE CARTER ACCÉLÉRATEUR)			0.3		0.5	0.3
02	98	FUEL LEVEL SENSOR CAPTEUR NIVEAU D'ESSENCE	0.4	0.4	0.4	0.5	0.5	0.4

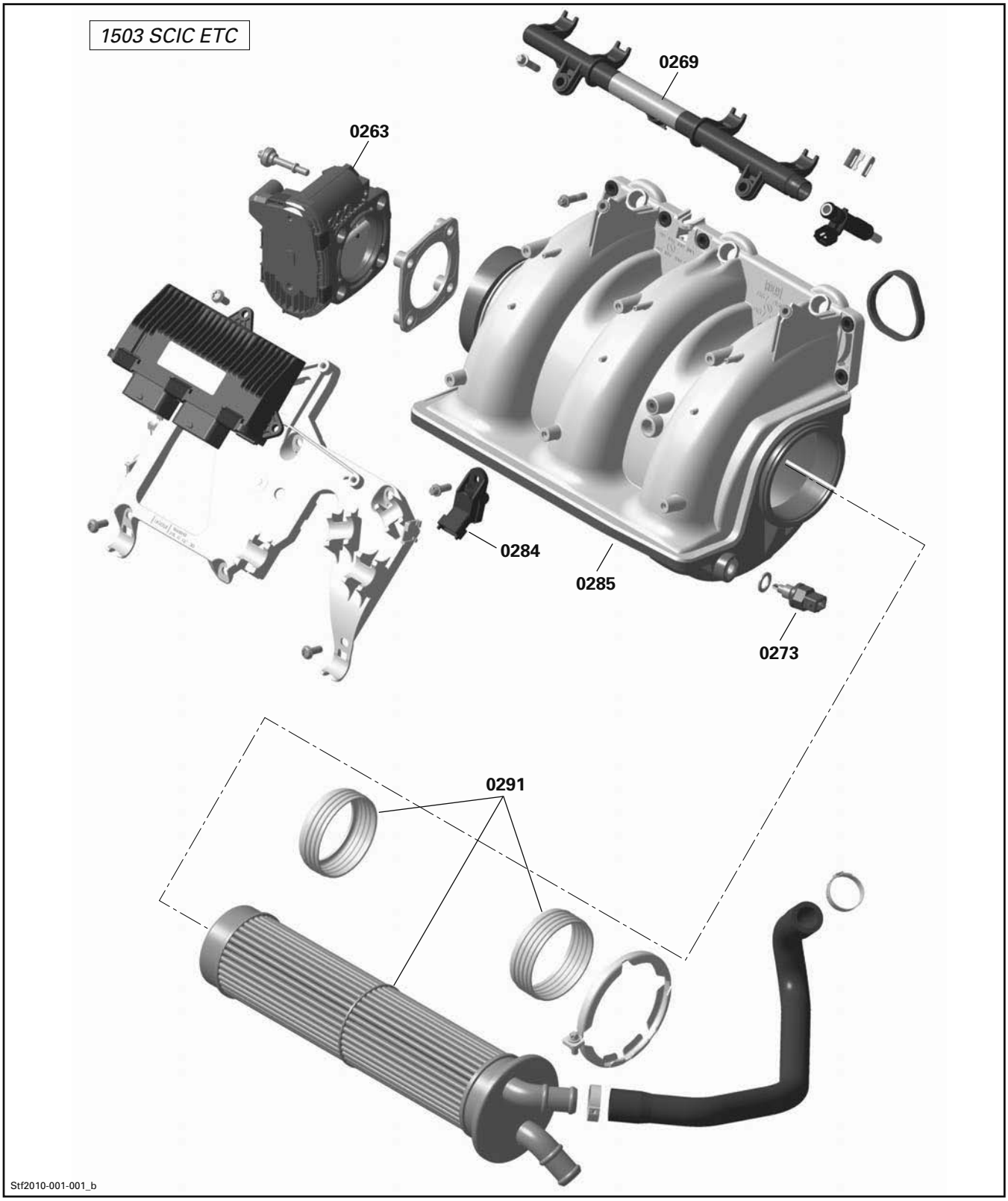
1503 SCIC ETC
0269
0263
0284
0285
0273
0291
Stf2010-001-001_b

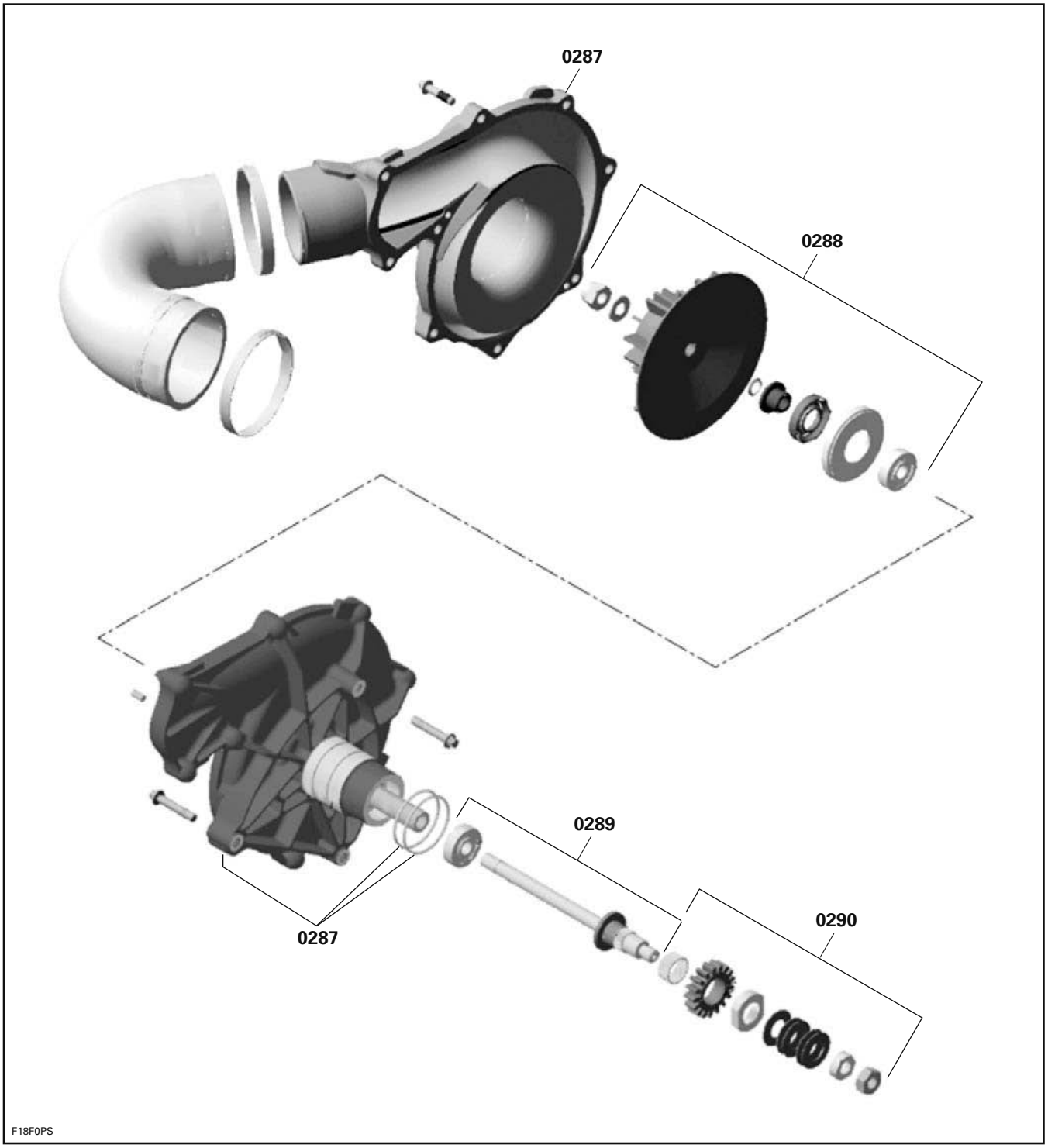
0287
0288
0289
0287
0290
F18F0PS

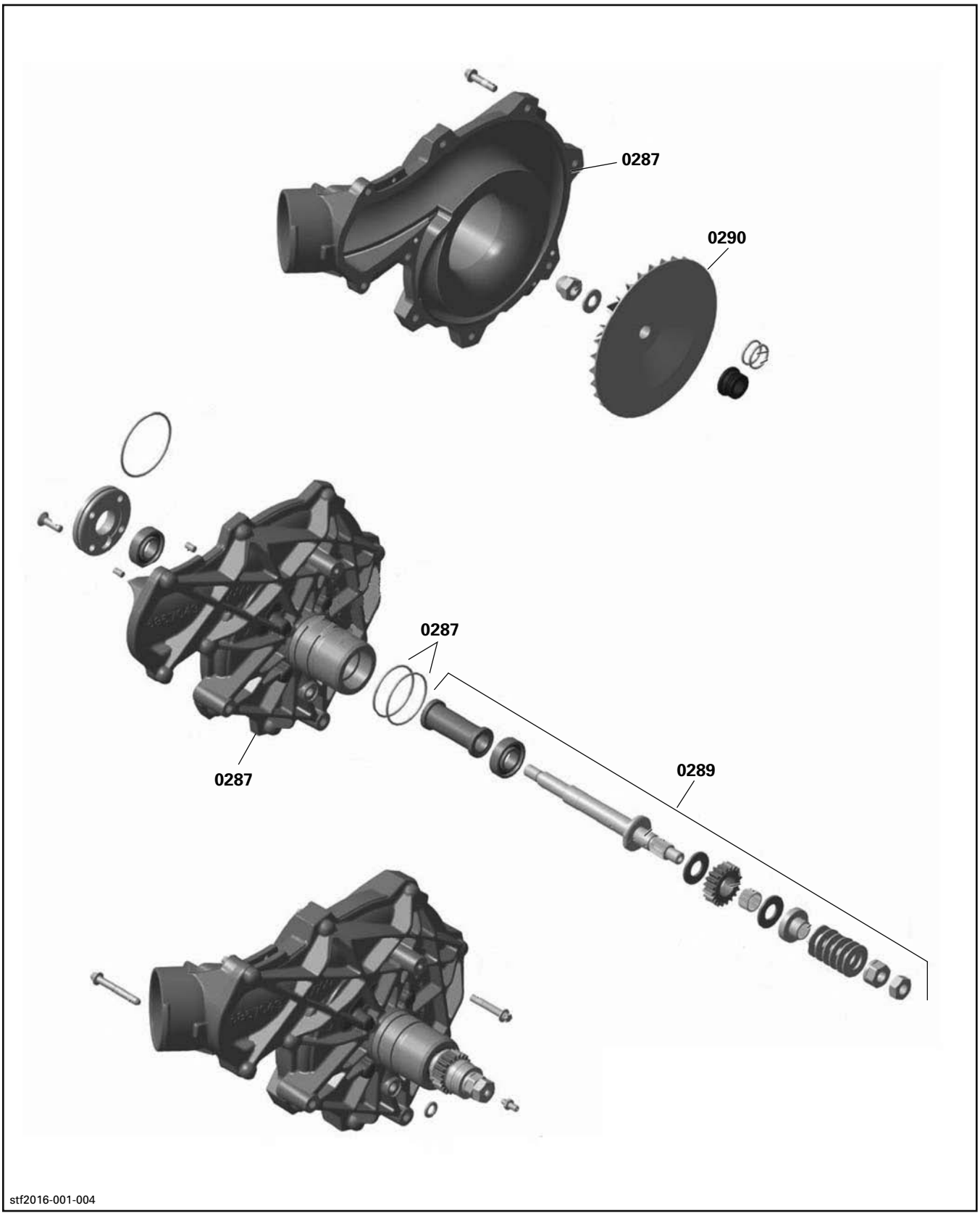
0287
0290
0287
0287
0289
stf2016-001-004

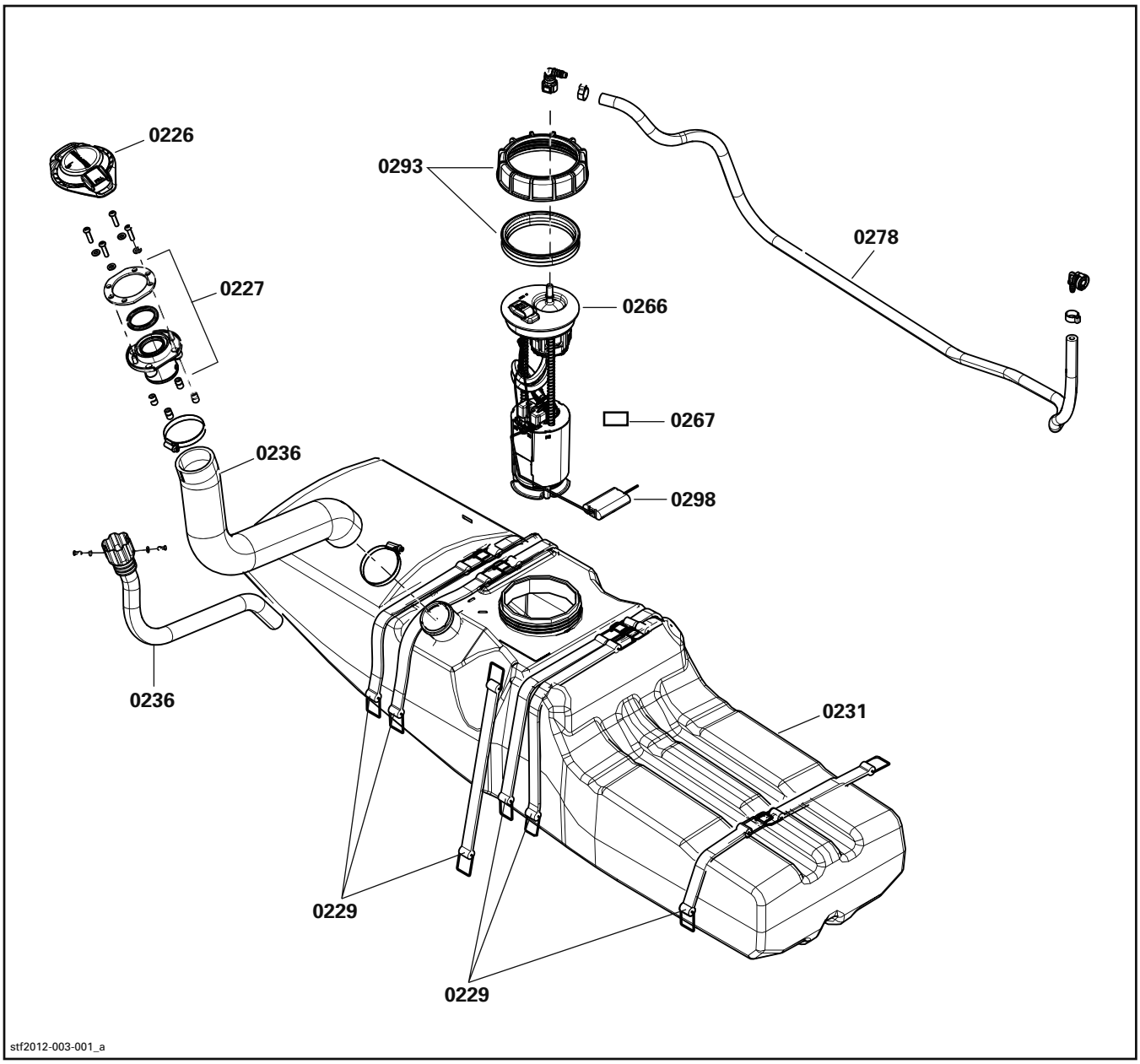
0226
0293
0278
0227
0266
0267
0236
0298
0236
0231
0229
0229
stf2012-003-001_a

FUEL SYSTEM
SYSTÈME D'ESSENCE

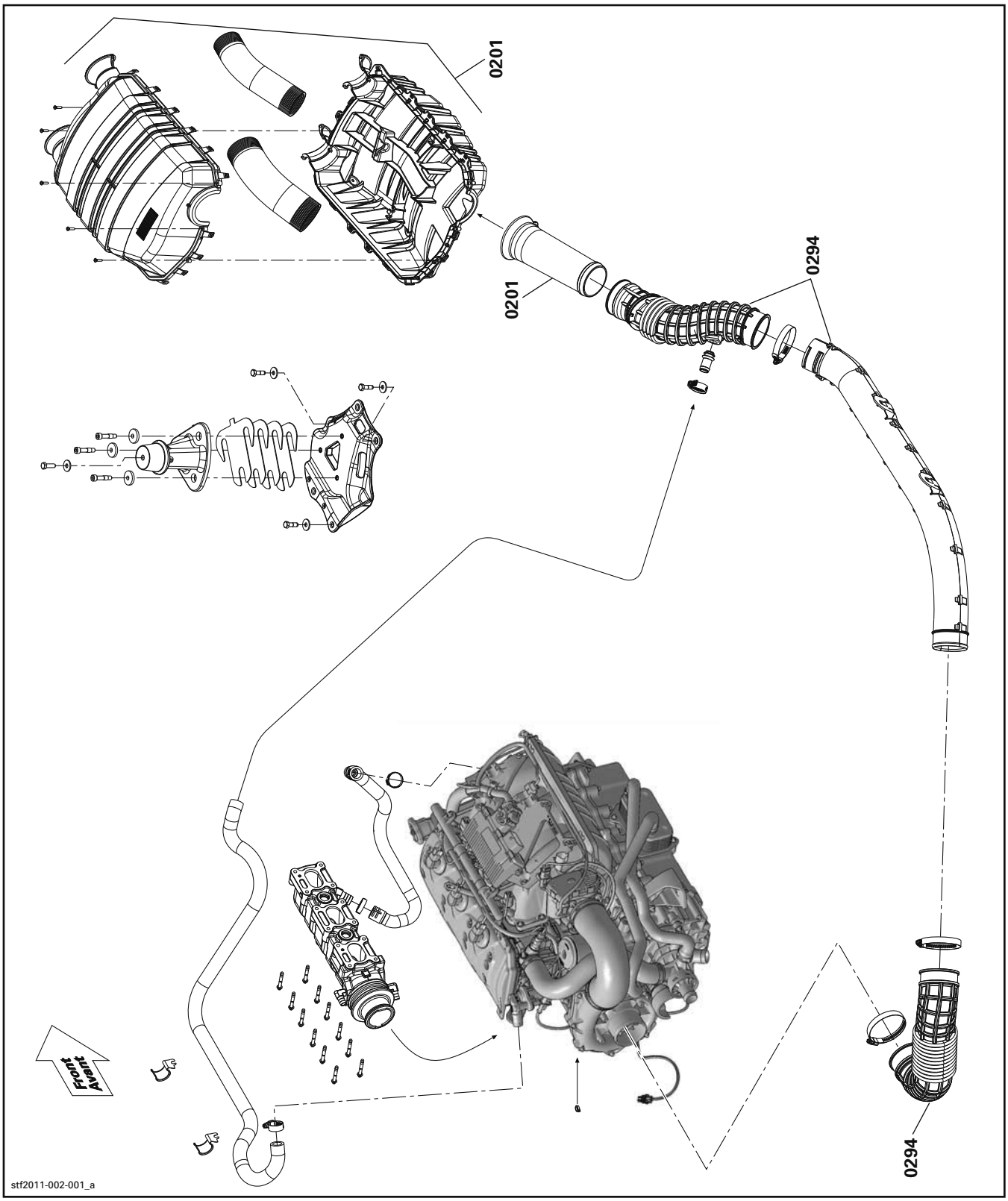

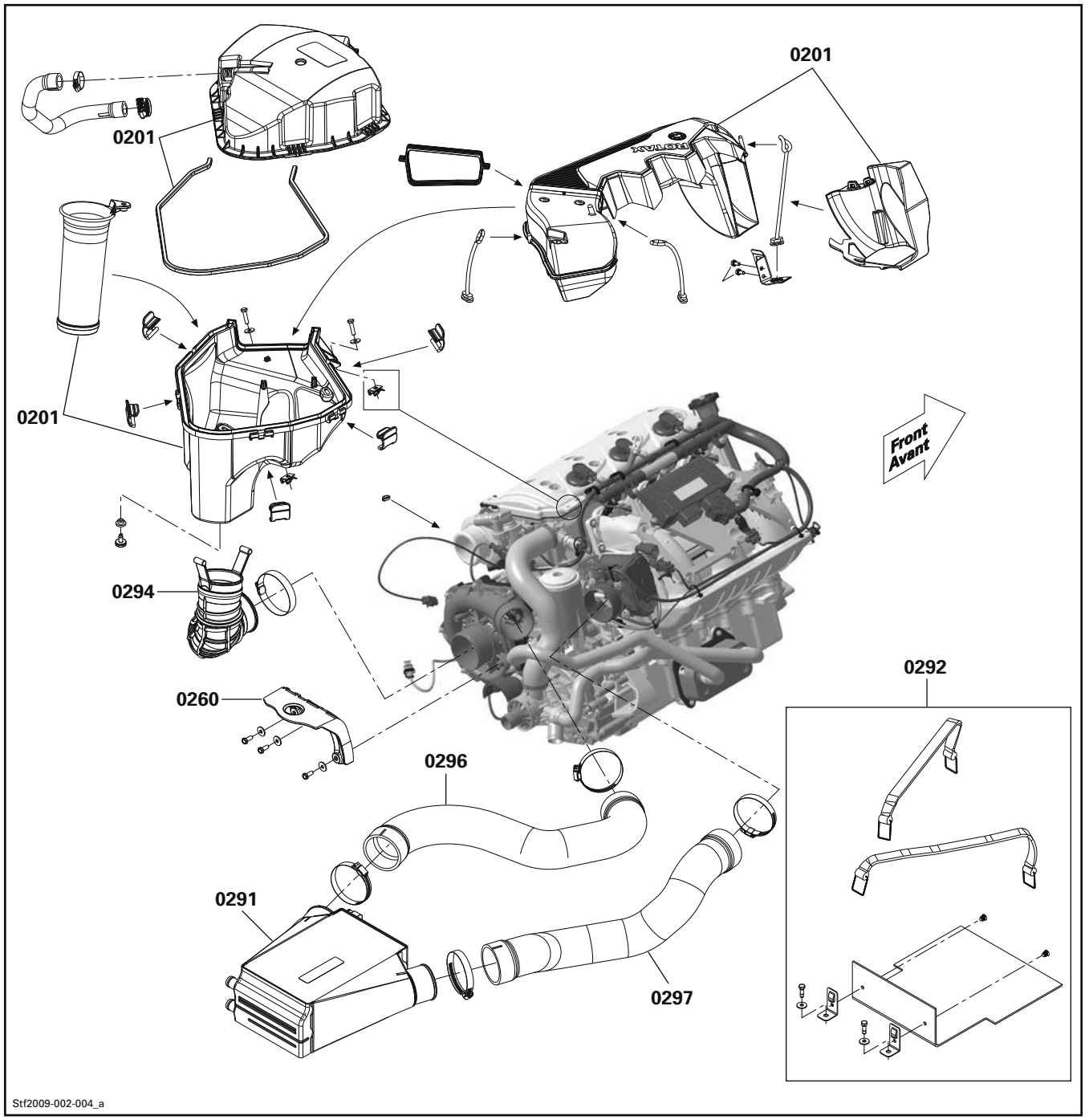
0201
0201
0201
Front
Avant
0294
0260
0292
0296
0291
0297
Stf2009-002-004_a

SYSTEM SYSTÈME	CODE	DESCRIPTION	GTX	GTX / WAKE	RXT	GTX S	GTX iS / RXT aS	GTX / RXT X
			6	7	8	9	10	11
03	**00**	**NO LABOR INVOLVED AUCUNE MAIN-D'OEUVRE**	**0**	**0**	**0**	**0**	**0**	**0**
03	04	IGNITION COIL BOBINE D'ALLUMAGE	0.3	0.3	0.3	0.3	0.3	0.3
03	06	MAGNETO FLYWHEEL VOLANT MAGNÉTIQUE	2.5	3.6	3.6	4.0	4.0	3.6
03	07	STATOR PLATE (ASS'Y) PLAQUE ARMATURE (COMPLET)	2.5	3.6	3.6	4.0	4.0	3.6

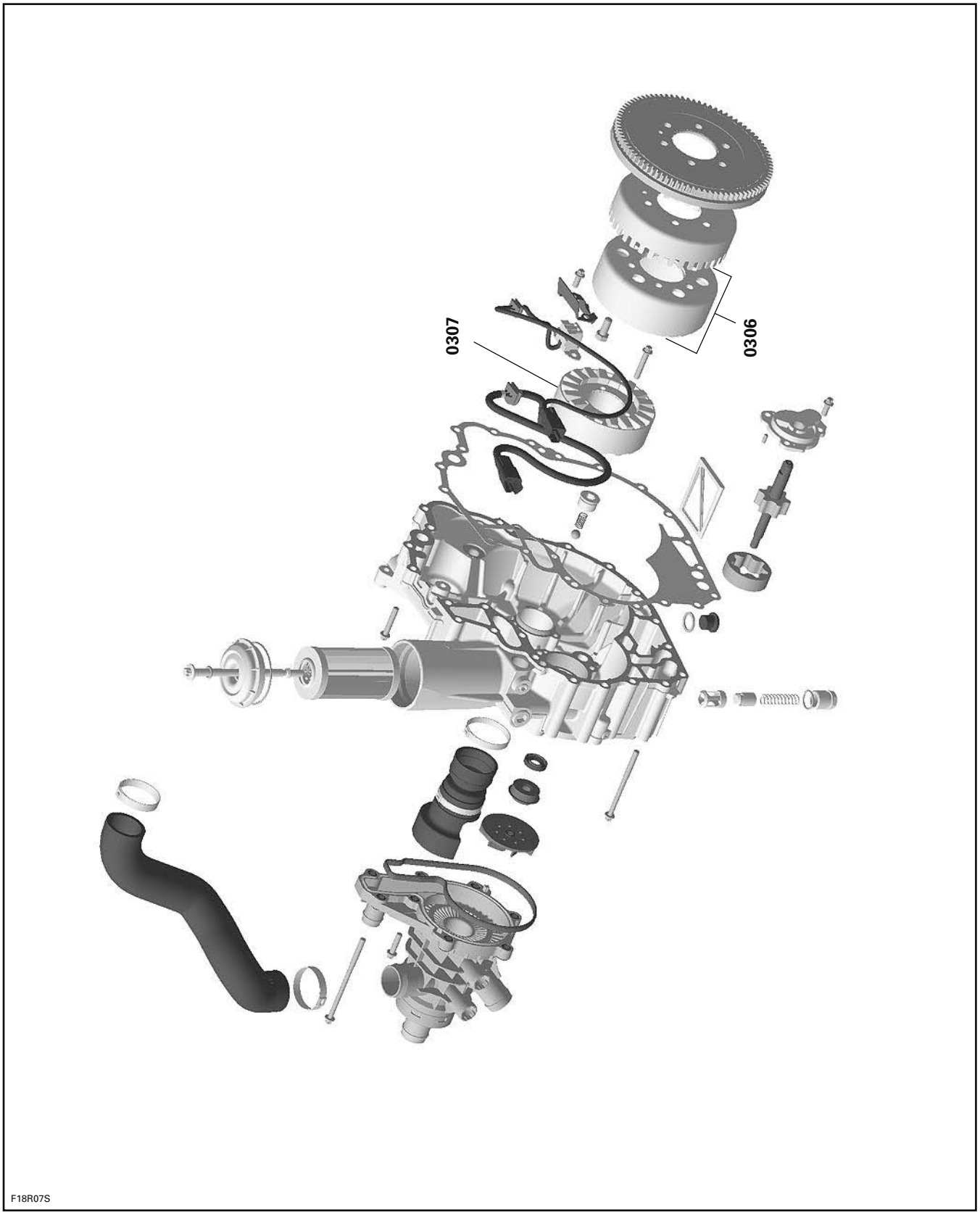
0307
0306
F18R07S

STARTER
DÉMARREUR

SYSTEM SYSTÈME	CODE	DESCRIPTION	GTX	GTX / WAKE	RXT	GTX S	GTX iS / RXT aS	GTX / RXT X
			6	7	8	9	10	11
04	**00**	**NO LABOR INVOLVED** **AUCUNE MAIN-D'OEUVRE**	**0**	**0**	**0**	**0**	**0**	**0**
04	02	ELECTRIC STARTER (ASS'Y) DÉMARREUR ÉLECTRIQUE (COMPLET)	0.5	0.6	0.6	1.3	1.3	0.6
04	03	ONE OR ALL STARTER COMPONENTS UNE OU TOUTES LES PIÈCES DU DÉMARREUR	0.7	0.8	0.8	1.5	1.5	0.8
04	05	STARTER RELAY SOLÉNOÏDE DÉMARREUR	0.3	0.3	0.3	0.3	0.3	0.3
04	08	STARTER DRIVE (ASS'Y) AND/OR COVER ENTRAÎNEMENT DU DÉMARREUR (COMPLET) ET/OU COUVERCLE	2.6	3.7	3.7	4.1	4.1	3.7
04	10	ELECTRIC STARTER DRIVE (ASS'Y) ENTRAÎNEMENT DU DÉMARREUR ÉLECTRIQUE (COMPLET)	2.5	3.6	3.6	4.0	4.0	3.6

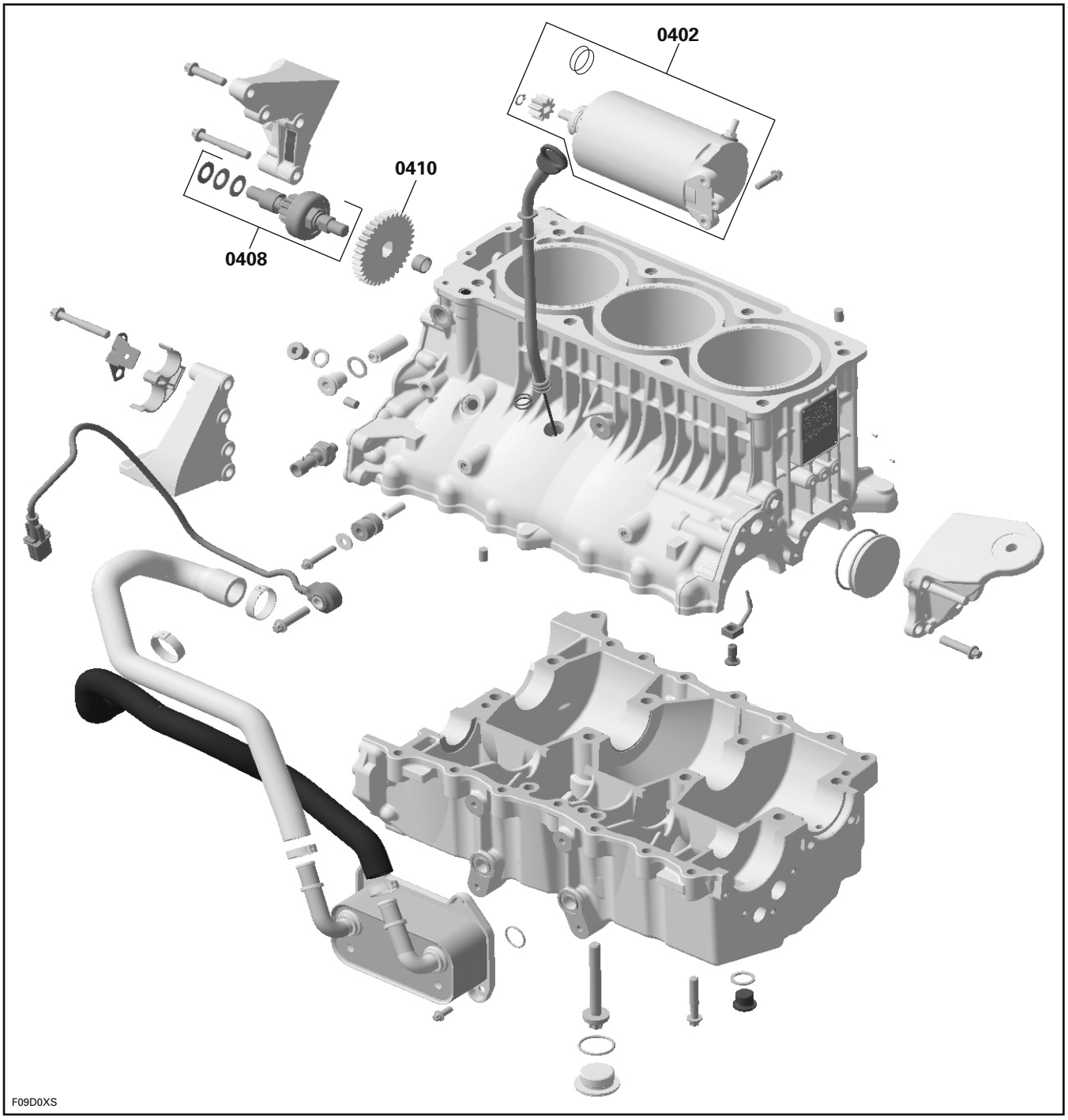
0402
0410
0408
F09D0XS

SYSTEM SYSTÈME	CODE	DESCRIPTION	GTX	GTX / WAKE	RXT	GTX S	GTX iS / RXT aS	GTX / RXT X
			6	7	8	9	10	11
05	00	**NO LABOR INVOLVED** **AUCUNE MAIN-D'OEUVRE**	**0**	**0**	**0**	**0**	**0**	**0**
05	02	HOSE (FROM SCREEN BAILERS TO IMPELLER HOUSING) BOYAU (TAMIS DÉCLENCHEMENT AU CARTER D'HÉLICE)	0.4	0.4	0.4	0.4	0.4	0.4
05	04	STEERING NOZZLE AND/OR BUSHING AND/OR SLEEVE BUSE DE DIRECTION ET/OU DOUILLE ET/OU MANCHON	0.4	0.4	0.4	0.4	0.4	0.4
05	05	VENTURI AND/OR O-RING VENTURI ET/OU JOINT TORIQUE	0.4	0.4	0.4	0.4	0.4	0.4
05	06	IMPELLER SHAFT HOUSING COVER AND/OR O-RINGS AND/OR GREASE COUVERCLE ARBRE TURBINE ET/OU JOINT TORIQUE ET/OU GRAISSE	0.5	0.5	0.5	0.5	0.5	0.5
05	07	PTO FLYWHEEL RUBBER BOOT CLAMP (EACH) COLLIER DE SERRAGE DU SOUFFLET VOLANT PDM (CHACUN)	0.3	0.3	0.3	0.4	0.4	0.3
05	08	PTO FLYWHEEL RUBBER BOOT SOUFFLET CAOUTCHOUC VOLANT CÔTÉ PDM	0.7	0.8	0.8	1.2	1.2	0.8
05	10	IMPELLER HOUSING FITTING RACCORD DU CARTER D'HÉLICE	0.4	0.4	0.4	0.4	0.4	0.4
05	11	DRIVE SHAFT AND/OR BUMPER PLUG ARBRE DE TRANSMISSION ET/OU BOUCHON CONTRE CHOC	0.7	0.7	0.7	1.1	1.1	0.7
05	12	IMPELLER AND/OR SHAFT AND/OR WASHER AND/OR THRUST BEARING TURBINE ET/OU ARBRE ET/OU RONDELLE ET/OU PALIER BUTÉE	1.1	1.1	1.1	1.1	1.1	1.1
05	13	IMPELLER HOUSING (ASS'Y) CARTER D'HÉLICE (COMPLET)	1.1	1.1	1.1	1.1	1.1	1.1
05	14	IMPELLER SHAFT DOUBLE LIP SEAL AND/OR BEARING ANNEAU ÉTANCHÉITÉ D'ARBRE TURBINE ET/OU ROULEMENT À BILLES	1.1	1.1	1.1	1.1	1.1	1.1
05	15	WEAR RING BAGUE D'USURE	1.4	1.4	1.4	1.4	1.4	1.4
05	18	WATER INLET GRATE GRILLE DE POMPE (ADMISSION D'EAU)	0.4	0.4	0.4	0.4	0.4	0.4
05	21	IMPELLER HOUSING REMOVAL AND INSTALLATION DÉPOSE ET INSTALLATION DU CARTER D'HÉLICE	0.5	0.5	0.5	0.5	0.5	0.5
05	30	REVERSE GATE (ASS'Y) DÉFLECTEUR DE MARCHE ARRIÈRE (COMPLET)	0.4	0.4	0.4	0.4	0.4	0.4
05	38	PUMP SUPPORT SUPPORT DE POMPE	3.3	3.3	3.3	3.5	3.5	3.3
05	45	RING CARBONE BAGUE AU CARBONE	0.7	1.2	1.2	1.8	2.0	1.2
05	57	FLOATING RING BAGUE FLOTTANTE	0.7	1.2	1.2	1.8	2.0	1.2
05	64	ARM BLACK BRAS NOIR	0.4	0.4	0.4	0.4	0.4	0.4
05	66	ROD PIVOT PIVOT DE RACCORD	0.4	0.4	0.4	0.4	0.4	0.4

SYSTEM SYSTÈME	CODE	DESCRIPTION	GTX 6	GTX / WAKE 7	RXT 8	GTX S 9	GTX iS / RXT aS 10	GTX / RXT X 11
05	72	SUPPORT PLATE AND/OR SEALS (RIGHT SIDE) PLAQUE SUPPORT ET/OU ANNEAU D'ÉTANCHÉITÉ (CÔTÉ DROIT)	0.6	0.6	0.6	0.6	0.6	0.6
05	73	SUPPORT PLATE AND/OR SEALS (LEFT SIDE) PLAQUE SUPPORT ET/OU ANNEAU D'ÉTANCHÉITÉ (CÔTÉ GAUCHE)	0.7	0.7	0.7	0.7	0.7	0.7
05	74	FIXING PLATE (RIGHT SIDE) PLAQUE FIXATION (CÔTÉ DROIT)	0.6	0.6	0.6	0.6	0.6	0.6
05	75	FIXING PLATE (LEFT SIDE) PLAQUE FIXATION (CÔTÉ GAUCHE)	0.7	0.7	0.7	0.7	0.7	0.7
05	76	iBR ACTUATOR ACTUATEUR iBR	0.6	0.6	0.6	0.6	0.6	0.6
05	77	GUARD PROTECTEUR	0.3	0.3	0.3	0.3	0.3	0.3

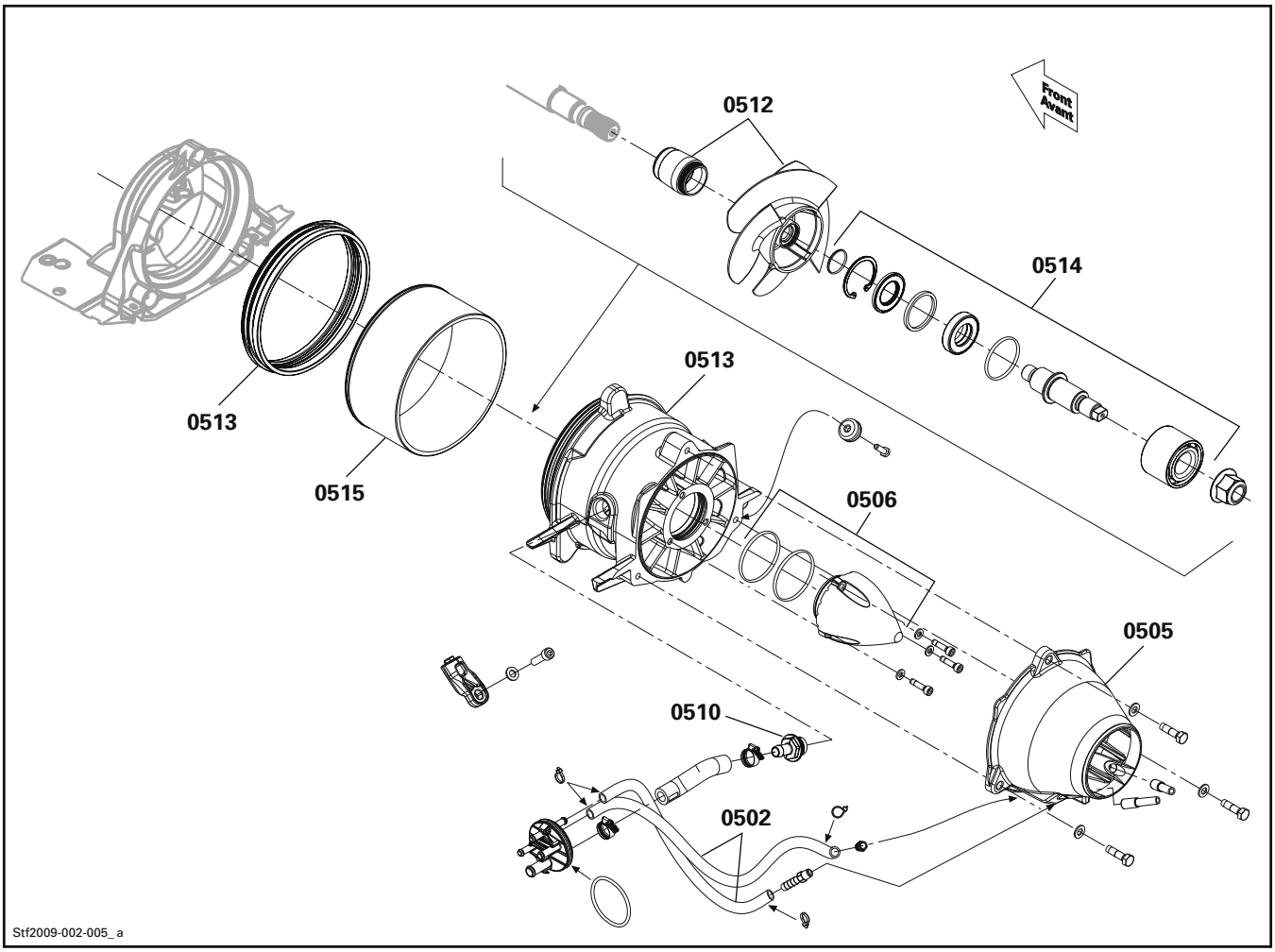
0512
Front
Avant
0514
0513
0513
0515
0506
0505
0510
0502
Stf2009-002-005_ a

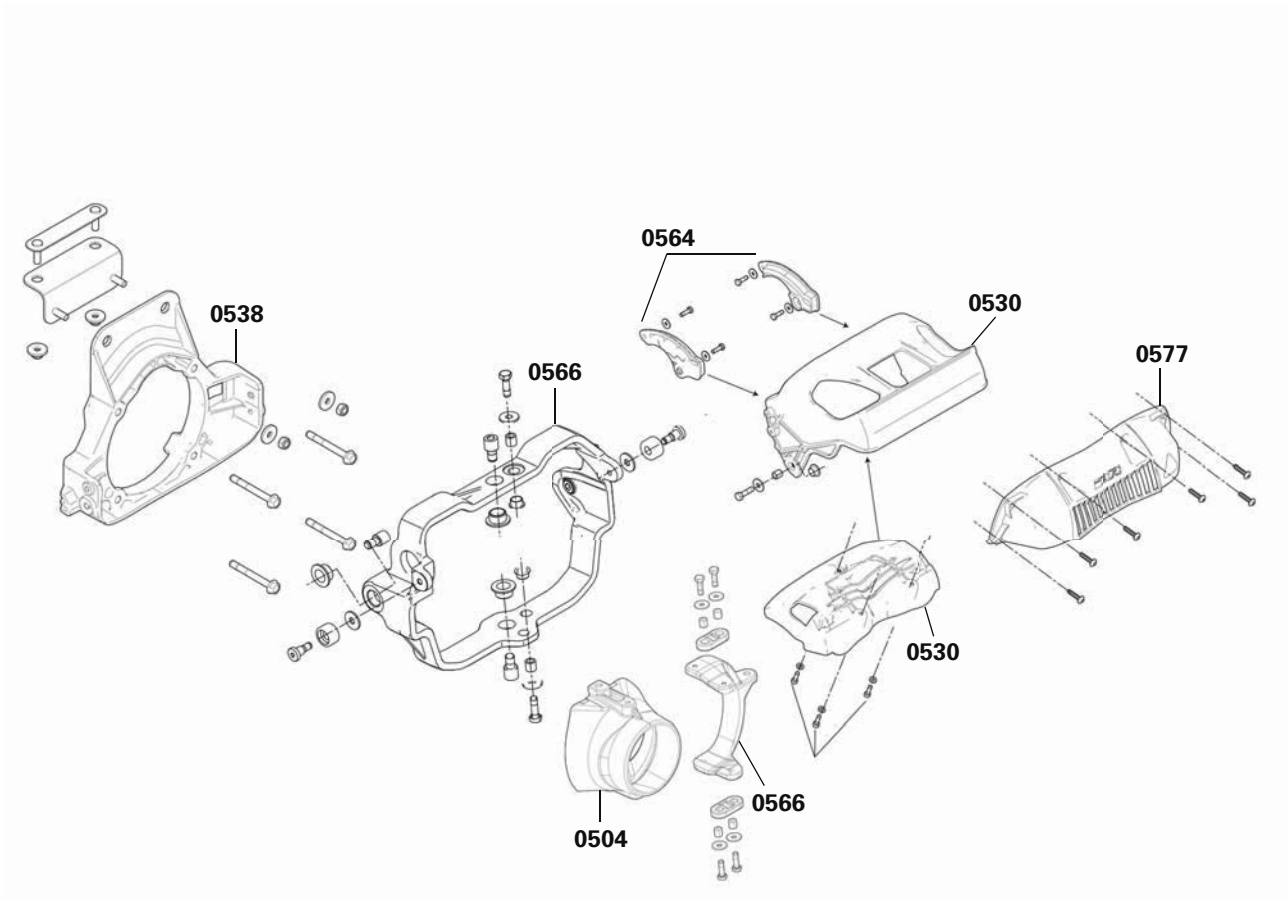

mtf2016-001-005

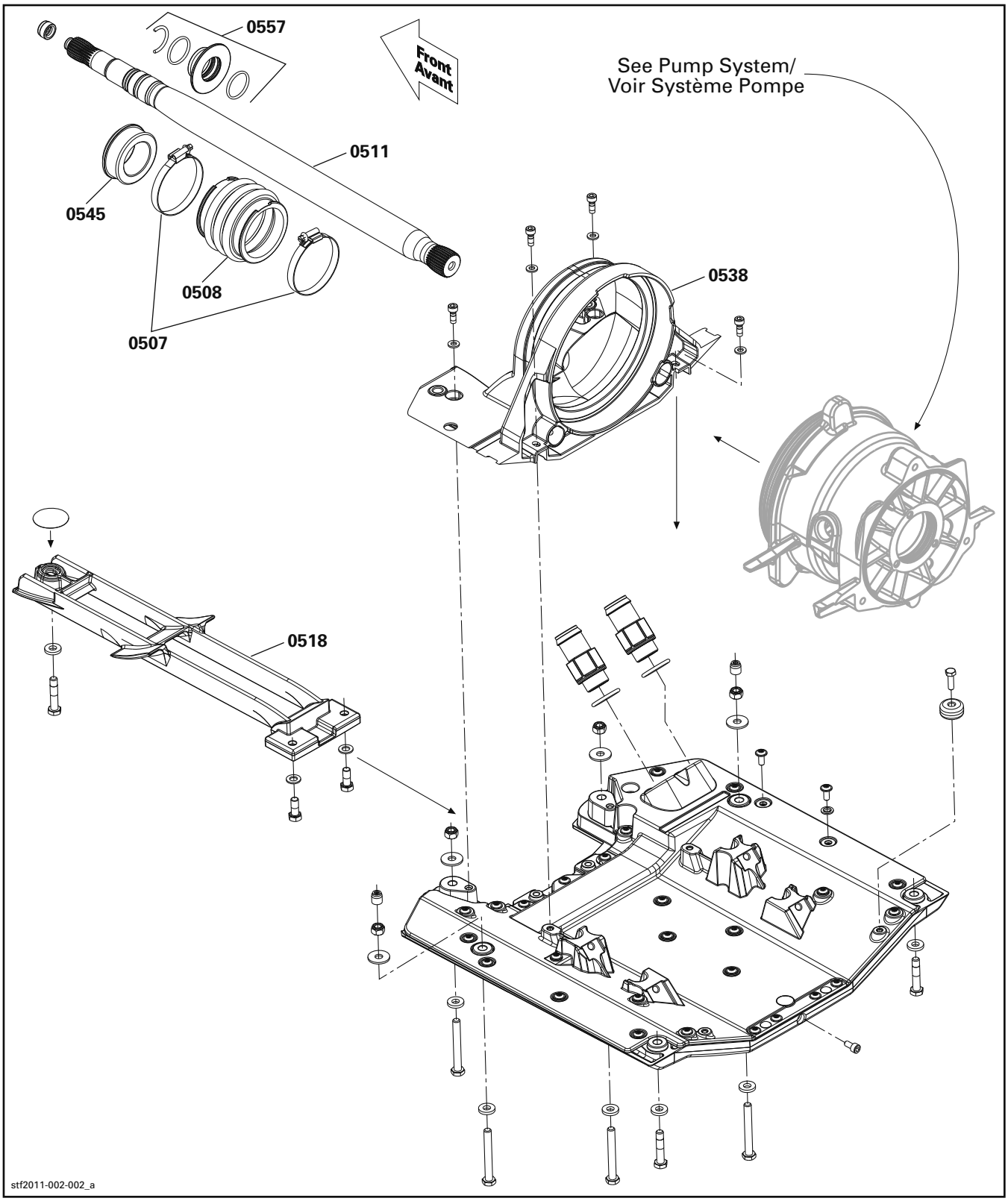
0557
Front
Avant
See Pump System/
Voir Système Pompe
0511
0545
0508
0507
0538
0518
stf2011-002-002_a

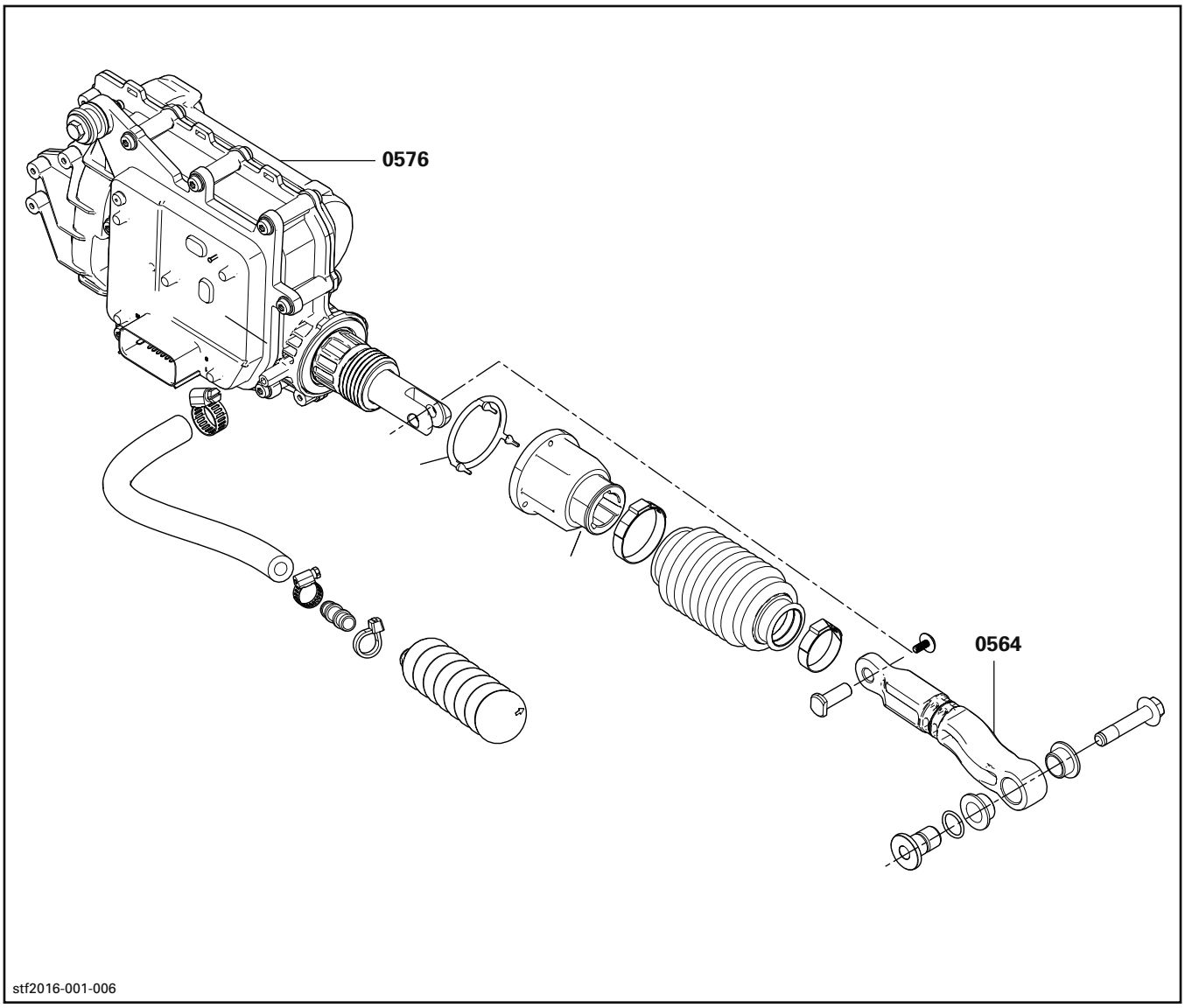
0576
0564
stf2016-001-006

SYSTEM SYSTÈME	CODE	DESCRIPTION	GTX	GTX/WAKE	RXT	GTX S	GTX iS/ RXT aS	GTX / RXT X
			6	7	8	9	10	11
07	**00**	**NO LABOR INVOLVED** **AUCUNE MAIN-D'OEUVRE**	**0**	**0**	**0**	**0**	**0**	**0**
07	01	HANDLE GRIP (1 OR 2) GAINE DE GUIDON (1 OU 2)	0.3	0.3	0.3	0.3	0.3	0.3
07	03	HANDLE HOUSING (LEFT) LOGEMENT DE GUIDON (GAUCHE)	0.3	0.3	0.3	0.3	0.3	0.3
07	04	THROTTLE HANDLE HOUSING (RIGHT) LOGEMENT DE MANETTE D'ACCÉLÉRATEUR (DROIT)	0.3	0.3	0.3	0.3	0.3	0.3
07	05	STEERING COVER AND/OR FOAM COUVRE-GUIDON ET/OU MOUSSE	0.4	0.4	0.4	0.4	0.4	0.4
07	06	HANDLEBAR GUIDON	0.9	0.9	0.9	0.9	0.9	0.9
07	07	STEERING STEM ARM BRAS DE TIGE DE DIRECTION	0.4	0.4	0.4	0.4	0.4	0.4
07	13	STEERING CABLE (FROM NOZZLE TO STEM ARM) CÂBLE DE DIRECTION (DE LA BUSE AU BRAS DE TIGE)	0.8	0.8	0.8	1.3	1.3	0.8
07	14	FRONT BALL JOINT STEERING CABLE JOINT À ROTULE AVANT (CÂBLE DE DIRECTION)	0.3	0.3	0.3	0.3	0.3	0.3
07	15	REAR BALL JOINT STEERING CABLE (1 OR 2) JOINT À ROTULE ARRIÈRE (CÂBLE DE DIRECTION) (1 OU 2)	0.3	0.3	0.3	0.3	0.3	0.3
07	44	STEERING SUPPORT SUPPORT DIRECTION	1.3	1.3	1.3	1.3	1.3	1.3
07	80	GAUGE SUPPORT, COVER AND TRIM SUPPORT DE CADRAN, COUVERCLE ET ENJOLIVEUR	0.3	0.3	0.3	0.3	0.3	0.3
07	81	THROTTLE HANDLE AND/OR BUSHINGS MANETTE ACCÉLÉRATEUR ET/OU COUSSINETS	0.4	0.4	0.4	0.4	0.4	0.4
07	82	REVERSE HANDLE AND/OR BUSHINGS MANETTE DE RENVERSE ET/OU COUSSINETS	0.4	0.4	0.4	0.4	0.4	0.4
07	83	ADJUSTABLE LATCH, PIVOTS AND LOCK LOQUET AJUSTABLE, PIVOTS ET VERROU	1.3	1.3	1.3	1.3	1.3	1.3
07	84	STEERING PIVOT (RIGHT AND/OR LEFT) PIVOT DE DIRECTION (DROIT ET/OU GAUCHE)	1.3	1.3	1.3	1.3	1.3	1.3
07	85	WEAR RING BAGUE D'USURE	0.6	0.6	0.6	0.6	0.6	0.6
07	86	GROMMET CABLE SOUFFLET DE CÂBLE	1.3	1.3	1.3	1.3	1.3	1.3
07	87	ADAPTER CABLE ADAPTATEUR DE CABLE	1.0	1.0	1.0	1.0	1.0	1.0

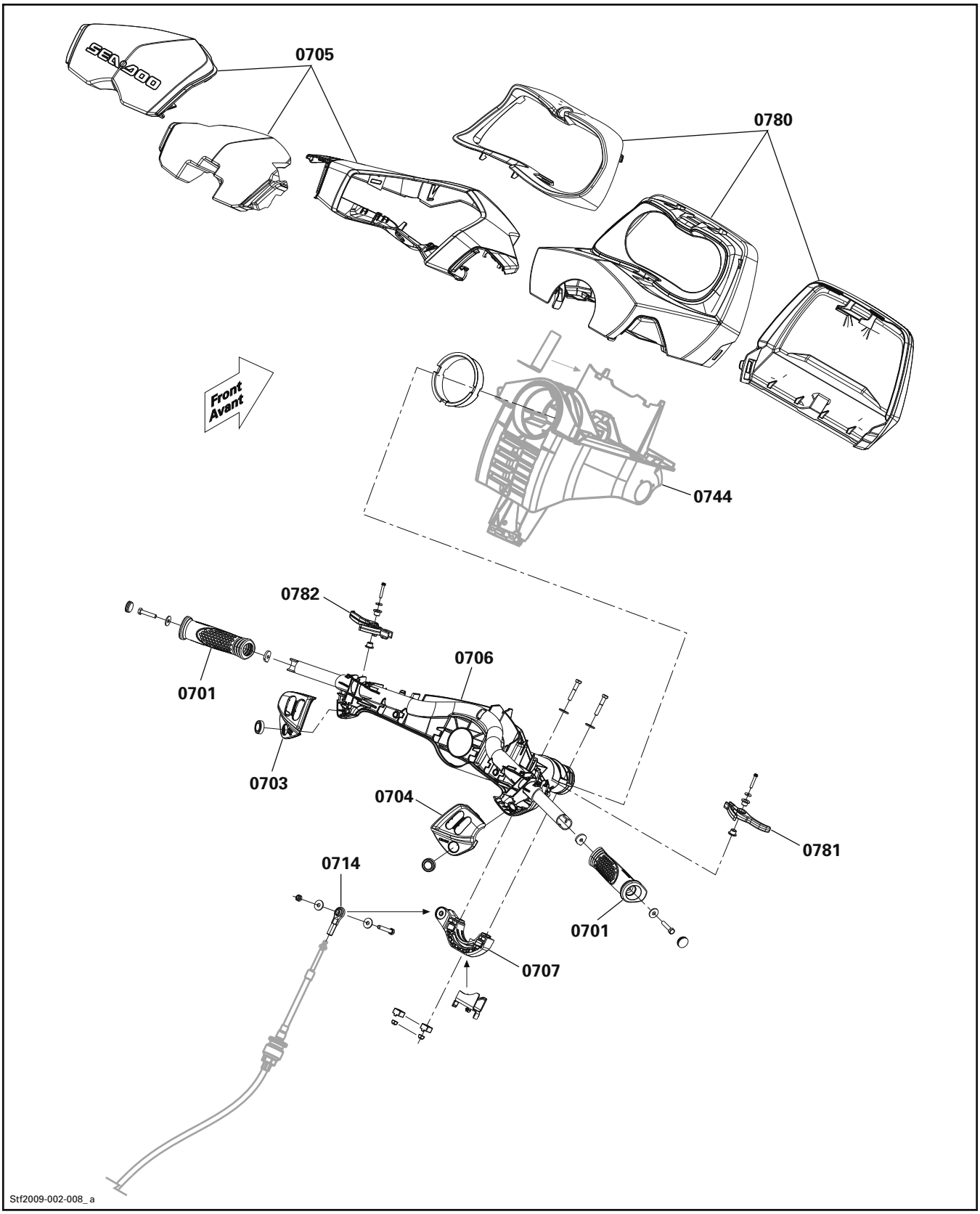
0705
0780
Front
Avant
0744
0782
0706
0701
0703
0704
0781
0714
0701
0707
Stf2009-002-008_ a

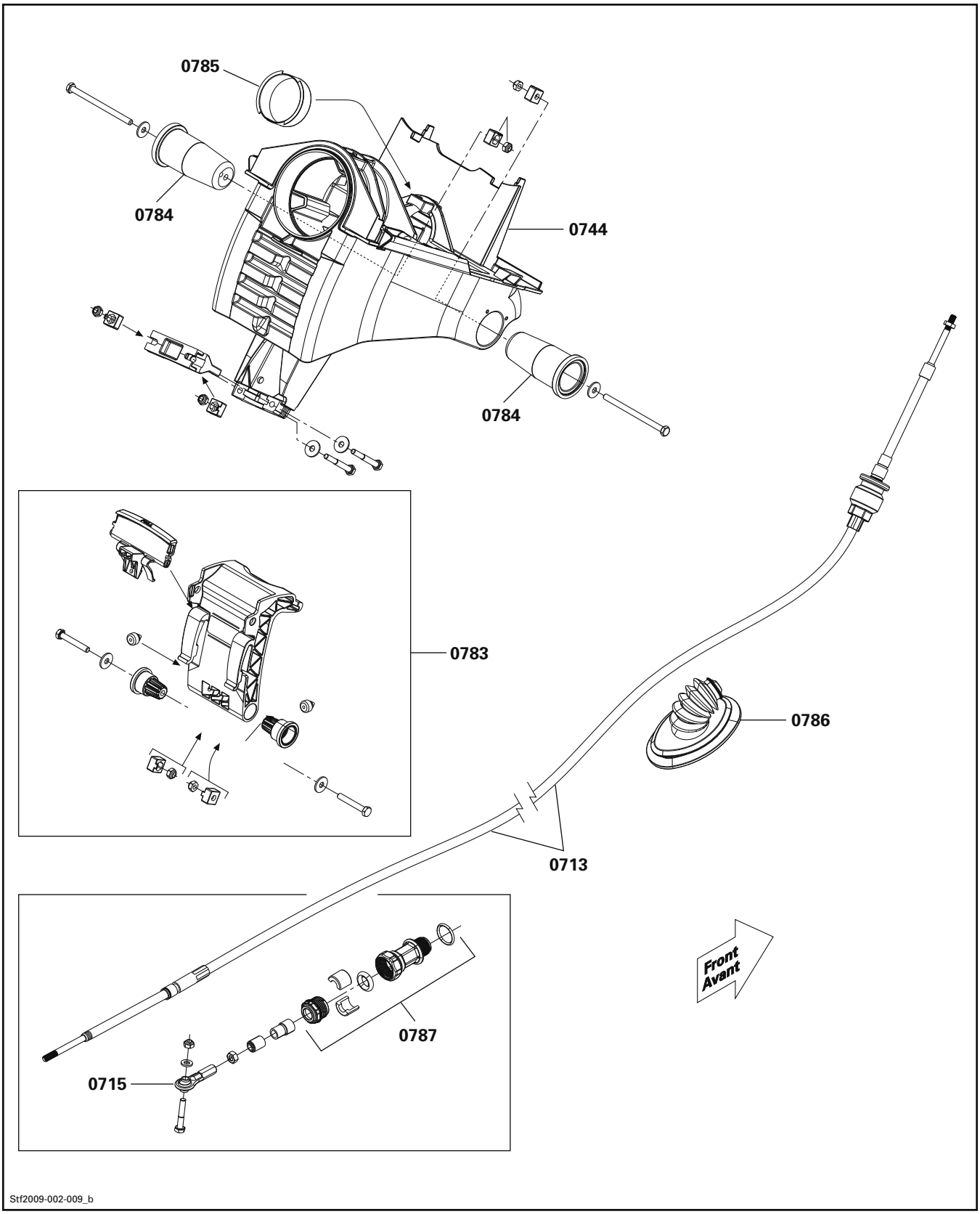
0785
0784
0744
0784
0783
0786
0713
0787
0715
Front
Avant
Stf2009-002-009_b

SYSTEM SYSTÈME	CODE	DESCRIPTION	GTX 6	GTX / WAKE 7	RXT 8	GTX S 9	GTX iS / RXT aS 10	GTX / RXT X 11
08	**00**	**NO LABOR INVOLVED** **AUCUNE MAIN-D'OEUVRE**				**0**	**0**	**0**
08	01	FRONT ARM AND/OR SHAFT BRAS AVANT ET/OU ARBRE				6.0	6.0	
08	02	FRONT ARM BASE BASE DE BRAS AVANT				6.4	6.4	
08	03	SPRING, SUPPORT, SPACER, PROTECTOR AND CLAMP RESSORT, SUPPORT, ESPACEUR, PROTECTEUR ET BRIDE				1.2	1.2	
08	04	SHOCK AND BUSHINGS AMORTISSEUR ET COUSSINETS				1.4	1.4	
08	05	SHOCK SUPPORT (UPPER) SUPPORT D'AMORTISSEUR (SUPÉRIEUR)				1.2	1.2	
08	06	ACTUATOR AND BUSHINGS ACTIONNEUR ET COUSSINETS				2.0	2.0	
08	07	ACTUATOR PUMP POMPE DE L'ACTIONNEUR					2.0	
08	08	SHOCK LOWER SUPPORT SUPPORT D'AMORTISSEUR INFÉRIEUR				1.4	1.4	
08	09	ACTUATOR LOWER SUPPORT SUPPORT INFÉRIEUR DE L'ACTIONNEUR				1.9	1.9	
08	10	HYDRAULIC HOSE BOYAU HYDRAULIQUE					2.0	
08	11	ALIGNMENT ARM, ADAPTOR, BRACKET AND BUSHINGS BRAS ALIGNEMENT, ADAPTEUR, ATTACHE ET COUSSINETS					1.9	
08	12	SENSOR BRACKET, LEVER, COVER AND O-RING ATTACHE CAPTEUR, LEVIER, COUVERCLE ET JOINT TORIQUE					0.6	
08	13	POSITION SENSOR AND O-RING CAPTEUR DE POSITION ET JOINT TORIQUE					0.6	
08	14	CLAMP AND/OR BUMPER (RIGHT OR LEFT) BRIDE DE RETENUE ET/OU BUTÉE (DROITE OU GAUCHE)				2.0	2.0	
08	15	RUBBER BUMPER (RIGHT OR LEFT) BUTÉE DE CAOUTCHOUC (DROITE OU GAUCHE)				0.7	0.7	
08	16	FOOTREST, BUMPER AND BUSHING (RIGHT OR LEFT) REPOSE-PIEDS, BUTÉE ET COUSSINET (DROIT OU GAUCHE)				0.7	0.7	
08	17	LATERAL BELLOW AND RING (RIGHT) SOUFFLET LATÉRAL ET ANNEAU (DROIT)				0.9	0.9	
08	18	LATERAL BELLOW AND RING (LEFT) SOUFFLET LATÉRAL ET ANNEAU (GAUCHE)				0.9	0.9	
08	19	FRONT ARM SHAFT (FRONT) ARBRE DU BRAS AVANT (AVANT)				6.0	6.0	
08	20	CENTRAL BELLOW AND PLATE SOUFFLET CENTRAL ET PLAQUE				0.9	0.9	

SYSTEM SYSTÈME	CODE	DESCRIPTION	GTX 6	GTX / WAKE 7	RXT 8	GTX S 9	GTX iS / RXT aS 10	GTX / RXT X 11
08	21	REAR ARM MOULDING ENJOLIVEUR BRAS ARRIÈRE				0.5	0.5	
08	22	REAR ARM BRAS ARRIÈRE				0.9	0.9	
08	23	REAR BASES, BUSHINGS, BUMPERS AND SHAFT BASES ARRIÈRE, COUSSINETS, BUTÉES ET ARBRE				0.6	0.6	
08	24	CLAMP, BUSHINGS AND BUMPERS BRIDE DE RETENUE, COUSSINETS ET BUTÉES				0.8	0.8	
08	25	REAR ARM SHAFT (UPPER) ARBRE DU BRAS ARRIÈRE (SUPÉRIEUR)				0.8	0.8	
08	26	U-CLAMP AND/OR SKI HOOK AND/OR PLATE BRIDE EN U ET/OU CROCHET SKI ET/OU PLAQUE				0.5	0.5	

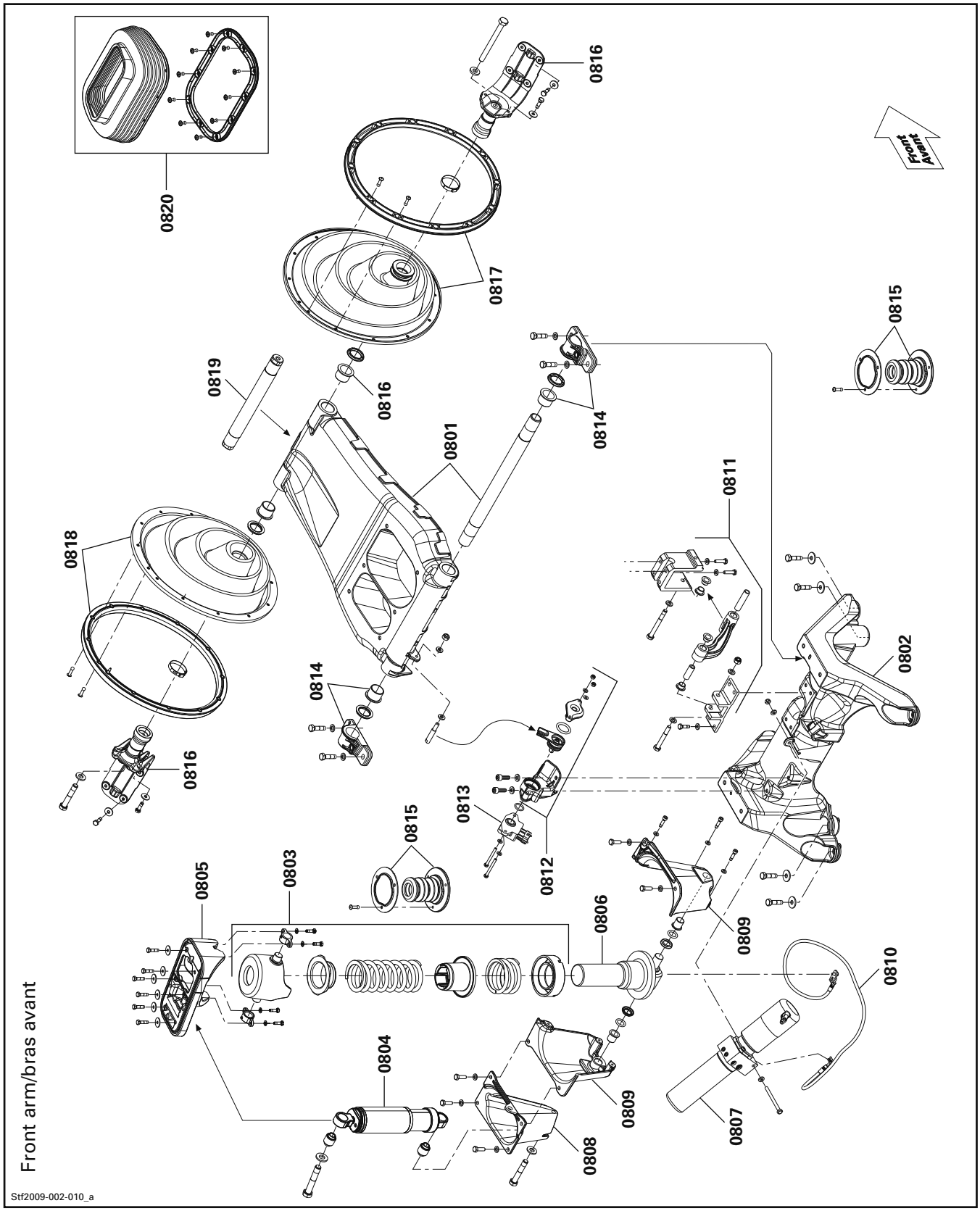

Front arm/bras avant

Rear arm/bras arrière

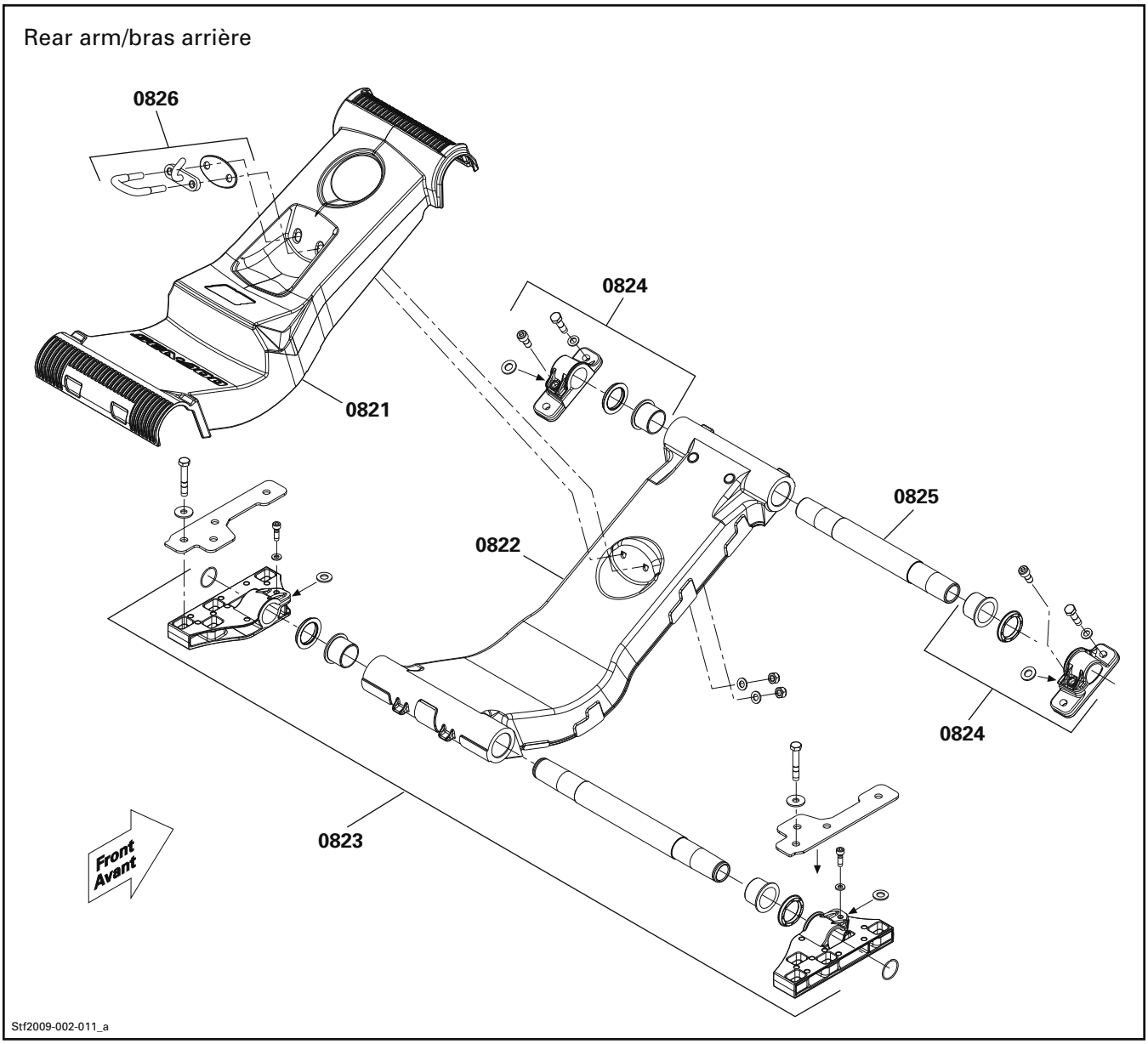

Stf2009-002-011_a

SYSTEM SYSTÈME	CODE	DESCRIPTION	GTX	GTX / WAKE	RXT	GTX S	GTX iS / RXT aS	GTX / RXT X
			6	7	8	9	10	11
09	**00**	**NO LABOR INVOLVED** **AUCUNE MAIN-D'OEUVRE**	**0**	**0**	**0**	**0**	**0**	**0**
09	01	FRONT BUMPER PARE-CHOCS AVANT	0.3	0.3	0.3	0.3	0.3	0.3
09	02	SIDE BUMPER (LEFT OR RIGHT) (1) PARE-CHOCS LATÉRAL (GAUCHE OU DROIT) (1)	0.3	0.3	0.3	0.3	0.3	0.3
09	04	SIDE BUMPER (BOTH SIDE) (2) PARE-CHOCS LATÉRAL (LES DEUX CÔTÉS) (2)	0.4	0.4	0.4	0.4	0.4	0.4
09	06	REAR BUMPER PARE-CHOCS ARRIÈRE	0.3	0.3	0.3	0.3	0.3	0.3
09	09	"U" CLAMP AND/OR SKI HOOK AND/OR FINITION/RETAINER PLATE BRIDE EN «U» ET/OU CROCHET SKI ET/OU PLAQUE RETENUE	0.3	0.3	0.3	0.5	0.5	0.3
09	10	STORAGE COVER (ANY OR ALL PARTS) COUVERCLE À BAGAGES (UNE OU TOUTES LES PIÈCES)	1.0	1.0	1.0	1.0	1.0	1.0
09	12	STORAGE COVER LATCH LOQUET DU COUVERCLE À BAGAGES	0.3	0.3	0.3	0.3	0.3	0.3
09	13	STORAGE COVER NEOPRENE SEAL ANNEAU EN NÉOPRÈNE DU COUVERCLE À BAGAGES	0.3	0.3	0.3	0.3	0.3	0.3
09	14	STORAGE COVER DECAL AUTOCOLLANT DU COUVERCLE À BAGAGES	0.3	0.3	0.3	0.3	0.3	0.3
09	15	SIDE BODY DECAL (RIGHT) (1 OR 2) AUTOCOLLANT LATÉRAL DE LA CARROSSERIE (DROIT) (1 OU 2)	0.5	0.5	0.5	0.5	0.5	0.5
09	16	SIDE BODY DECAL (LEFT) (1 OR 2) AUTOCOLLANT LATÉRAL DE LA CARROSSERIE (GAUCHE) (1 OU 2)	0.5	0.5	0.5	0.5	0.5	0.5
09	17	ALL BODY DECALS TOUS LES AUTOCOLLANTS DE LA CARROSSERIE	1.0	1.0	1.0	1.0	1.0	1.0
09	19	SIDE CARPET (1) TAPIS LATÉRAL (1)	0.3	0.3	0.3	0.3	0.3	0.3
09	20	SIDE CARPET (2) TAPIS LATÉRAL (2)	0.5	0.5	0.5	0.5	0.5	0.5
09	21	REAR CARPET TAPIS ARRIÈRE	0.5	0.5	0.5	0.5	0.5	0.5
09	22	SEAT (ASS'Y) SIÈGE (COMPLET)	0.3	0.3	0.3	0.3	0.3	0.3
09	24	SEAT COVER HOUSSE DE SIÈGE	1.9	1.9	1.9	2.	2.1	1.9
09	26	SEAT BASE NEOPRENE SEAL ANNEAU EN NÉOPRÈNE DE LA BASE DU SIÈGE	0.3	0.3	0.3	0.3	0.3	0.3
09	28	SEAT LACHT (ANY OR ALL PARTS) LOQUET DE SIÈGE (UNE OU TOUTES LES PIÈCES)	0.3	0.3	0.3	0.3	0.3	0.3
09	30	LACHT STUD (SEAT) ERGOT D'ENCRAGE (SIÈGE)	0.3	0.3	0.3	0.3	0.3	0.3

SYSTEM SYSTÈME	CODE	DESCRIPTION	GTX 6	GTX / WAKE 7	RXT 8	GTX S 9	GTX iS / RXT aS 10	GTX / RXT X 11
09	35	BOX GLOVES COFFRE À GANTS	0.8	0.8	0.8	0.8	0.8	0.8
09	36	PLATFORM CARPET (RIGHT OR LEFT) TAPIS DE PLATE-FORME (DROIT OU GAUCHE)				0.3	0.3	
09	37	GRAB HANDLE POIGNÉE DE MAINTIEN	0.4	0.4	0.4	0.4	0.4	0.4
09	38	SPONSON (RIGHT OR LEFT) (EACH) STABILISATEUR (DROIT OU GAUCHE) (CHACUN)	0.3	0.3	0.3	0.3	0.3	0.3
09	39	MIRROR (1) RÉTROVISEUR (1)	0.3	0.3	0.3	0.3	0.3	0.3
09	40	MIRRORS (2) RÉTROVISEURS (2)	0.4	0.4	0.4	0.4	0.4	0.4
09	44	SIDE HULL DECAL (1) AUTOCOLLANT LATÉRAL DE LA COQUE (1)	0.4	0.4	0.4	0.4	0.4	0.4
09	45	SIDE HULL DECALS (RIGHT) (2) AUTOCOLLANTS LATÉRAUX DE LA COQUE (2)	0.6	0.6	0.6	0.6	0.6	0.6
09	46	SIDE MOULDING (RIGHT OR LEFT) ENJOLIVEUR LATÉRAL (DROIT OU GAUCHE)	0.6	0.6	0.6	0.6	0.6	0.6
09	50	REAR SIDE BODY DECAL AUTOCOLLANT ARRIÈRE DE LA CARROSSERIE	0.3	0.3	0.3	0.3	0.3	0.3
09	51	BRP DECAL(S) AUTOCOLLANT(S) BRP	0.3	0.3	0.3	0.3	0.3	0.3
09	55	REBORDING LADDER ANT/OR SUPPORT (ASS'Y) ÉCHELLE D'EMBARQUEMENT ET/OU SUPPORT (COMPLET)	0.5	0.5	0.5	0.5	0.5	0.5
09	56	SIDE GRILL (RIGHT OR LEFT) GRILLE LATÉRALE (DROITE OU GAUCHE)	0.3	0.3	0.3	0.3	0.3	0.3
09	68	SEAT SHOCK AMORTISSEUR DE SIÈGE	0.3	0.3	0.3	0.3	0.3	0.3
09	72	EXTINGUISHER AND/OR STORAGE BOÎTIER EXTINCTEUR ET/OU DE RANGEMENT				0.3	0.3	
09	77	DEFLECTOR DÉFLECTEUR				0.3	0.3	
09	78	STORAGE TRAY COFFRE À BAGAGES	0.3	0.3	0.3	0.3	0.3	0.3
09	100	SPONSON SPACER ENTRETOISE DU STABILISATEUR			1.0		1.2	1.0
09	152	SIDE CARPETS (3) TAPIS LATÉRAUX (3)	0.7	0.7	0.7	0.7	0.7	0.7
09	166	SUPERIOR MOULDING (RIGHT OR LEFT) ENJOLIVEUR SUPÉRIEUR (DROIT OU GAUCHE)	0.3	0.3	0.3	0.3	0.3	0.3
09	168	FRONT GRILL GRILLE FRONTALE	0.7	0.7	0.7	0.7	0.7	0.7

SYSTEM SYSTÈME	CODE	DESCRIPTION	GTX 6	GTX / WAKE 7	RXT 8	GTX S 9	GTX iS / RXT aS 10	GTX / RXT X 11
09	204	SIDE CARPETS (4) TAPIS LATÉRAUX (4)	0.9	0.9	0.9	0.9	0.9	0.9
09	205	SIDE CARPETS (5) TAPIS LATÉRAUX (5)	1.1	1.1	1.1	1.1	1.1	1.1
09	206	SIDE CARPETS (6) TAPIS LATÉRAUX (6)	1.3	1.3	1.3	1.3	1.3	1.3
09	207	SIDE CARPETS (ALL) TAPIS LATÉRAUX (TOUS)	1.5	1.5	1.5	1.5	1.5	1.5
09	223	GAS SHOCK AMORTISSEUR À GAZ	0.3	0.3	0.3	0.3	0.3	0.3
09	254	HANDLE STEM (WAKE PYLON) POIGNÉE (POTEAU WAKE)		0.4				
09	255	EXTENSION TUBE (WAKE PYLON) TUBE D'EXTENSION (POTEAU WAKE)		1.0				
09	256	WAKE PYLON MOULDED POTEAU WAKE MOULÉ		1.0				
09	257	LOCKING STRAP COURROIE DE BLOCAGE		0.3				
09	262	BLEED PLUG BOUCHON DE PURGE	0.3	0.3	0.3	0.3	0.3	0.3
09	267	MOVING DECK (WITHOUT BODY PARTS) PONT MOBILE (SANS LES PIÈCES DE CARROSSERIES)				5.0	5.0	
09	268	REAR CONTROL ARM ADAPTOR ADAPTATEUR DU BRAS CONTRÔLE ARRIÈRE				1.2	1.2	
09	269	DECK EXTENSION AND SEAL RALLONGE DE PONT ET JOINT D'ÉTANCHÉITÉ				0.5	0.5	
09	270	FRONT SCRAPER JOINT (RIGHT) JOINT RACLEUR AVANT (DROIT)				0.8	0.8	
09	271	FRONT SCRAPER JOINT (LEFT) JOINT RACLEUR AVANT (GAUCHE)				0.8	0.8	
09	272	SIDE SCRAPER JOINT (RIGHT OR LEFT) JOINT RACLEUR LATÉRAL (DROIT OU GAUCHE)				0.4	0.4	
09	273	REAR SCRAPER JOINT (RIGHT OR LEFT) JOINT RACLEUR ARRIÈRE (DROIT OU GAUCHE)				0.4	0.4	
09	274	REAR GRILL (RIGHT OR LEFT) GRILLE ARRIÈRE (DROITE OU GAUCHE)				0.3	0.3	
09	275	SPEED-TIE (ASS'Y) ATTACHE D'AMARRAGE RAPIDE (COMPLET)				0.3	0.3	
09	276	SPEED-TIE (ALL PARTS) ATTACHE D'AMARRAGE RAPIDE (TOUTES LES PIÈCES)				0.4	0.4	
09	277	SUSPENSION MOUNTING PLATE (UPPER) PLAQUE DE MONTAGE DE SUSPENSION (SUPÉRIEURE)				0.5	0.5	

SYSTEM SYSTÈME	CODE	DESCRIPTION	GTX	GTX / WAKE	RXT	GTX S	GTX iS / RXT aS	GTX / RXT X
			6	7	8	9	10	11
09	278	SUSPENSION MOUNTING PLATE (LOWER) PLAQUE DE MONTAGE DE SUSPENSION (INFÉRIEURE)				0.5	0.5	
09	279	FRONT BODY MODULE MODULE DE CARROSSERIE AVANT	1.5	1.5	1.5	1.5	1.5	1.5
09	280	LOWER MOULDING (RIGHT OR LEFT) ENJOLIVEUR INFÉRIEUR (DROIT OU GAUCHE)	0.3	0.3	0.3	0.3	0.3	0.3
09	281	REAR PLATFORM AND/OR PIVOTS PLATE-FORME ARRIÈRE ET/OU PIVOTS				0.5	0.5	
09	282	LATCH AND/OR BASE (RIGHT OR LEFT) LOQUET ET/OU BASE (DROIT OU GAUCHE)				0.3	0.3	
09	283	REAR BIN AND/OR SEAL COFFRE ARRIÈRE ET/OU JOINT D'ÉTANCHÉITÉ				0.3	0.3	
09	284	BOX DOOR PORTE DE COFFRE	0.3	0.3	0.3	0.3	0.3	0.3
09	377	MOUNTING CASE ABSORBER BOÎTIER DE FIXATION D'AMORTISSEUR	0.6	0.6	0.6			
09	382	HULL INSERT PASSE-COQUE	5.0	5.0	5.0	5.5	5.5	5.0
09	383	ACCESS COVER (ASS'Y) (RIGHT OR LEFT) COUVERCLE D'ACCÈS (COMPLET) (DROIT OU GAUCHE)	0.3	0.3	0.3			
09	402	TRIM TAB CORRECTEUR D'ASSIETTE			0.3		0.3	0.3

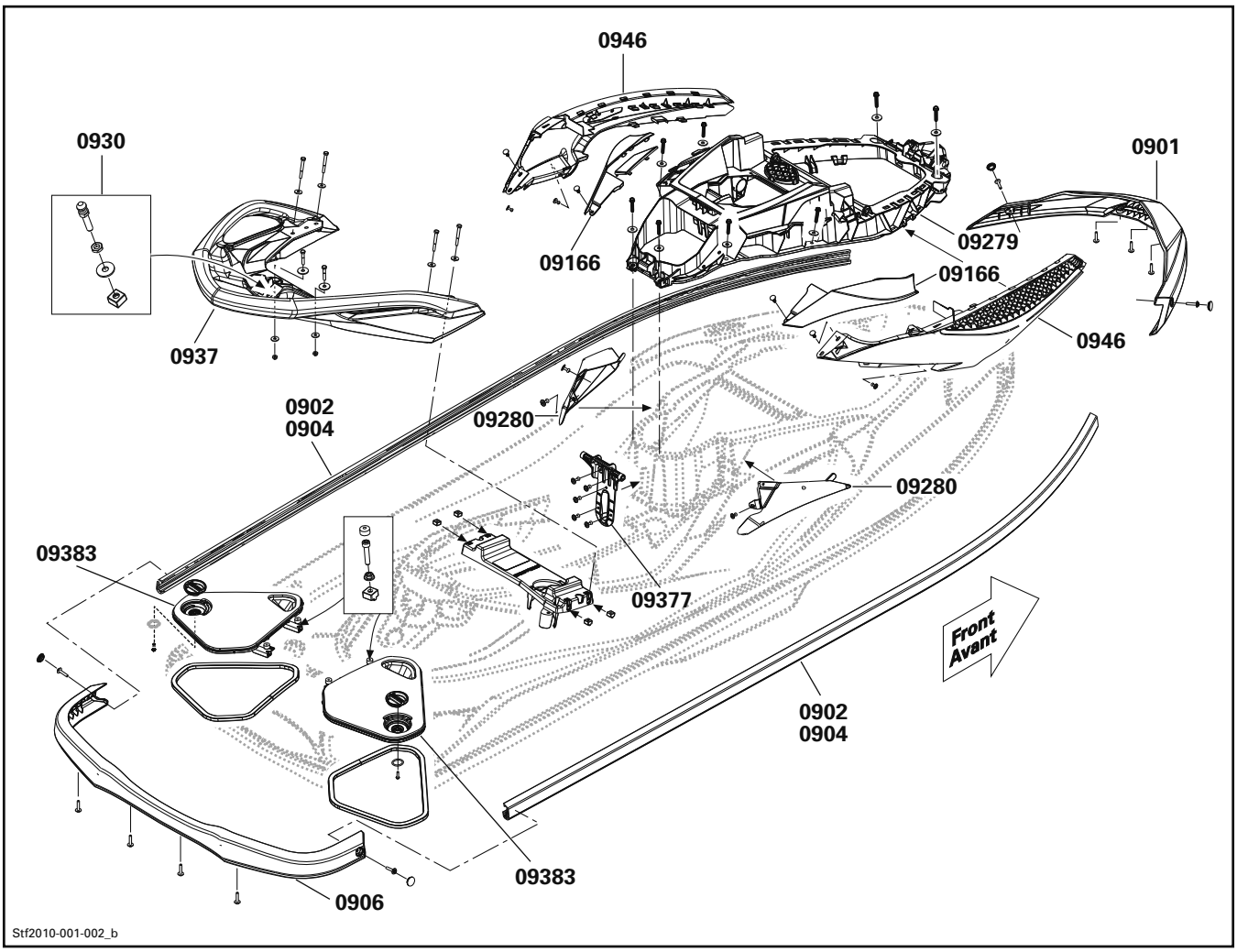
0946
0930
0901
09279
09166
09166
0937
0946
0902
0904
09280
09280
09383
09377
Front
Avant
0902
0904
09383
0906
Stf2010-001-002_b

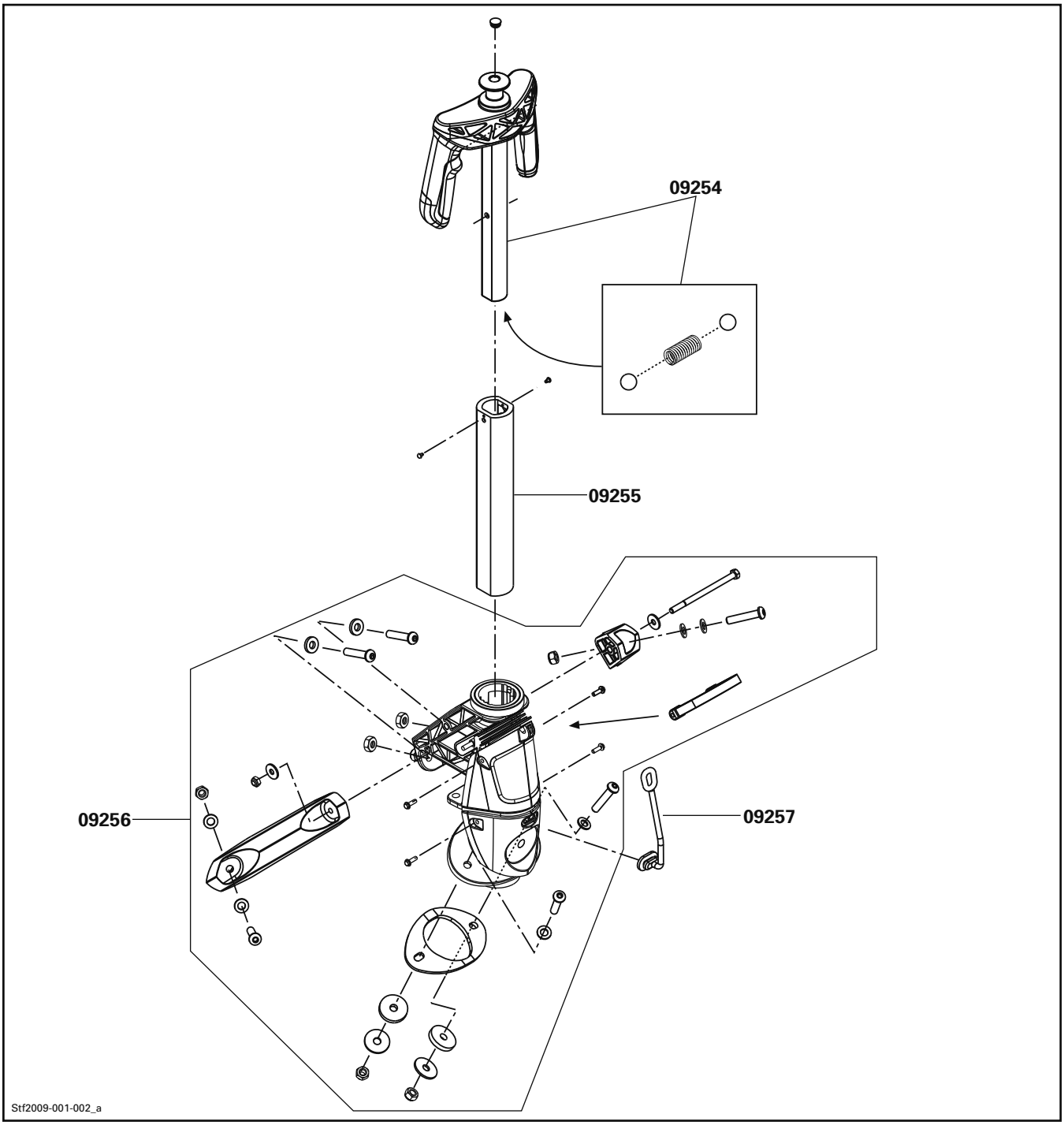
09254
09255
09256
09257
Stf2009-001-002_a

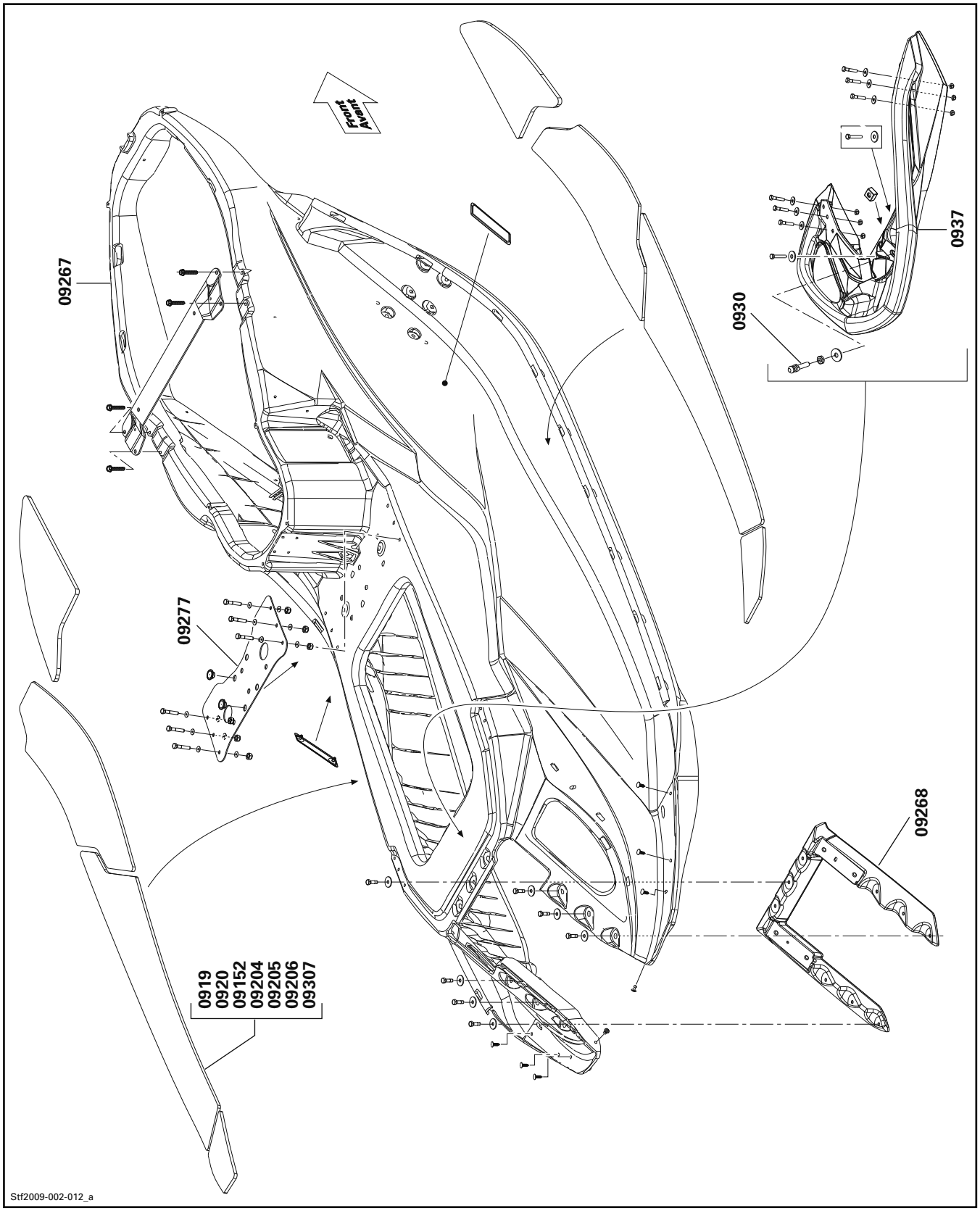
Front
Avant
09267
09277
0919
0920
09152
09204
09205
09206
09307
0930
0937
09268
Stf2009-002-012_a

BODY
CARROSSERIE

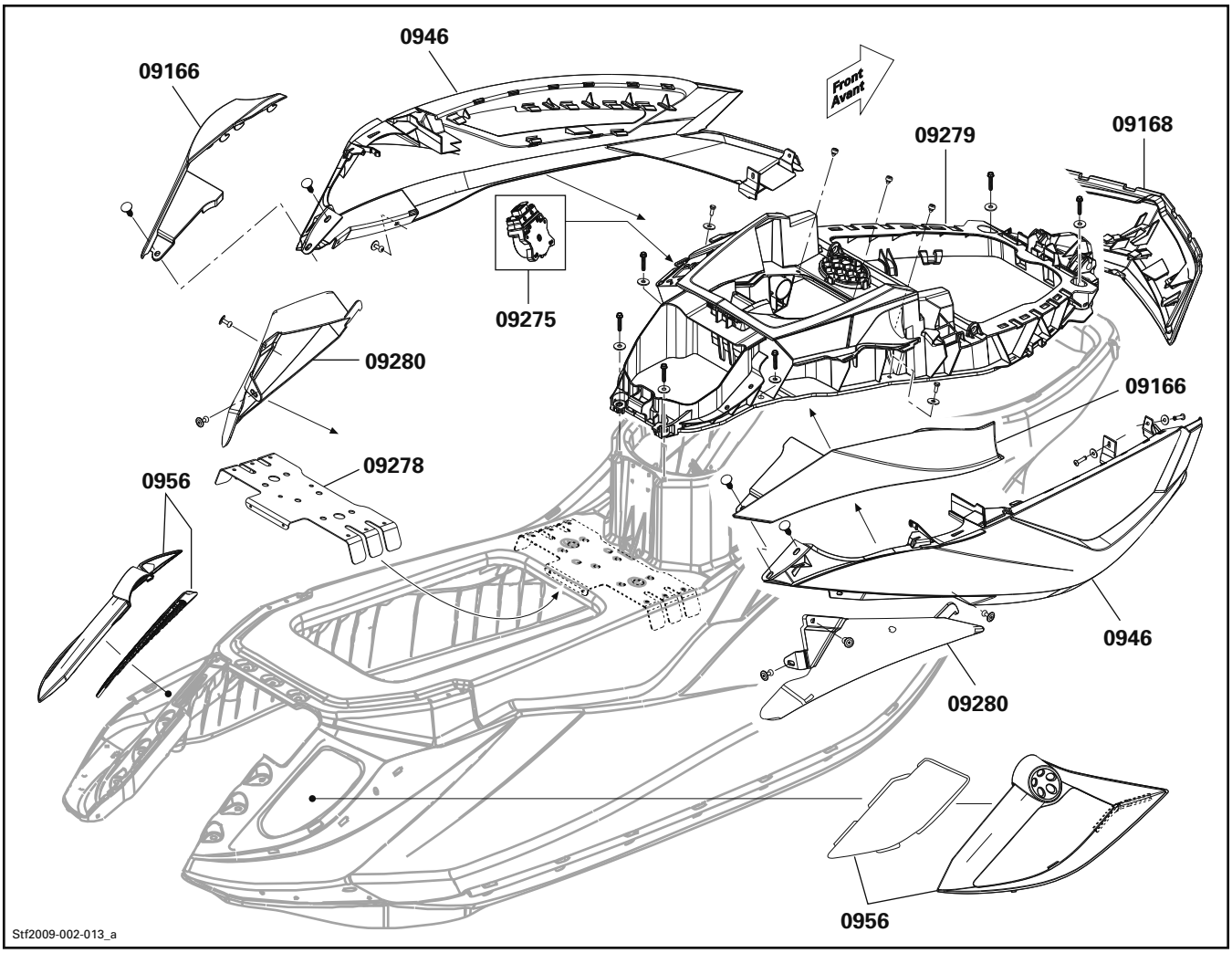

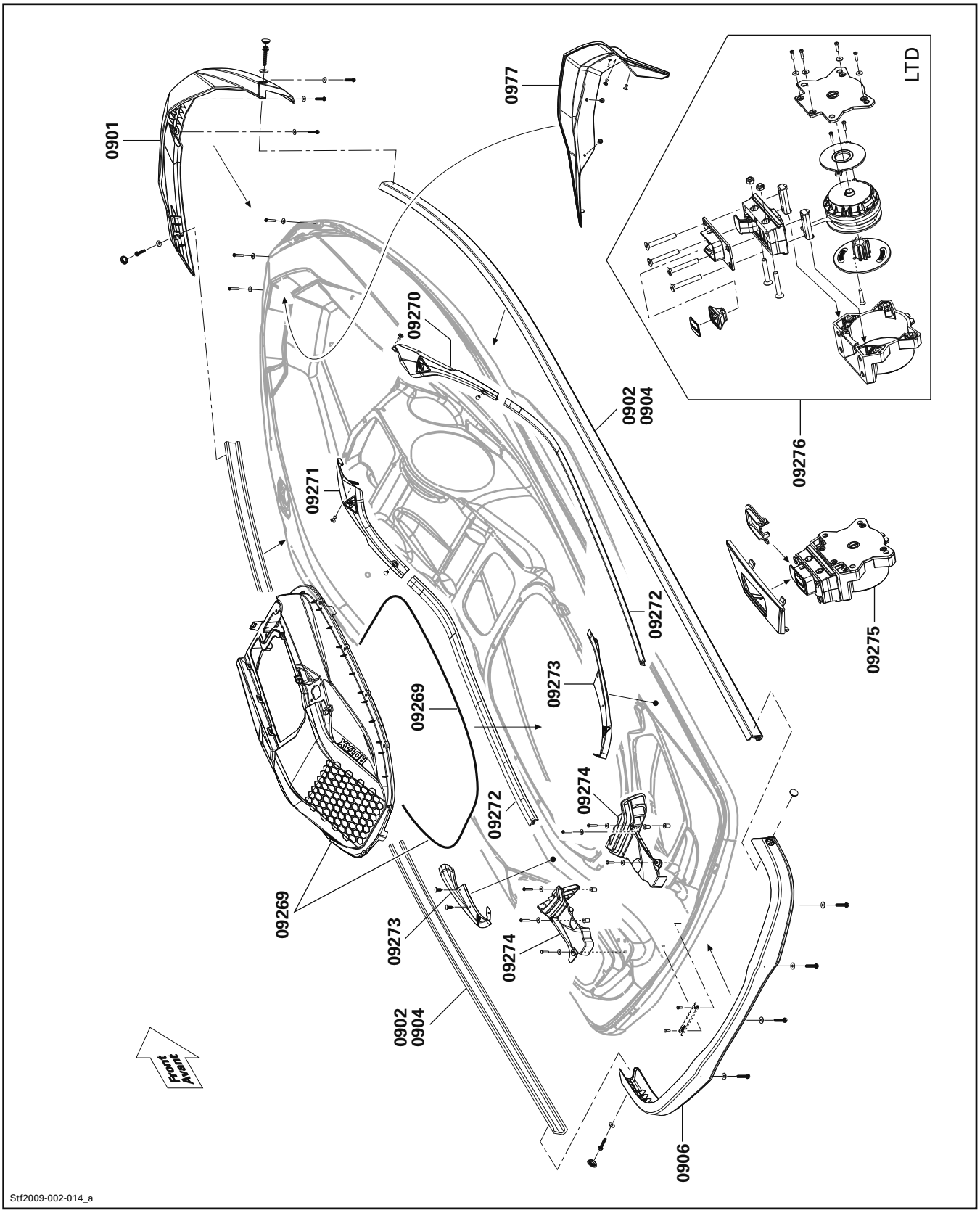
0901
0977
LTD
09270
0902
0904
09276
09271
09272
09275
09273
09269
09274
09272
09269
09273
09274
0902
0904
Front
Avant
0906
Stf2009-002-014_a

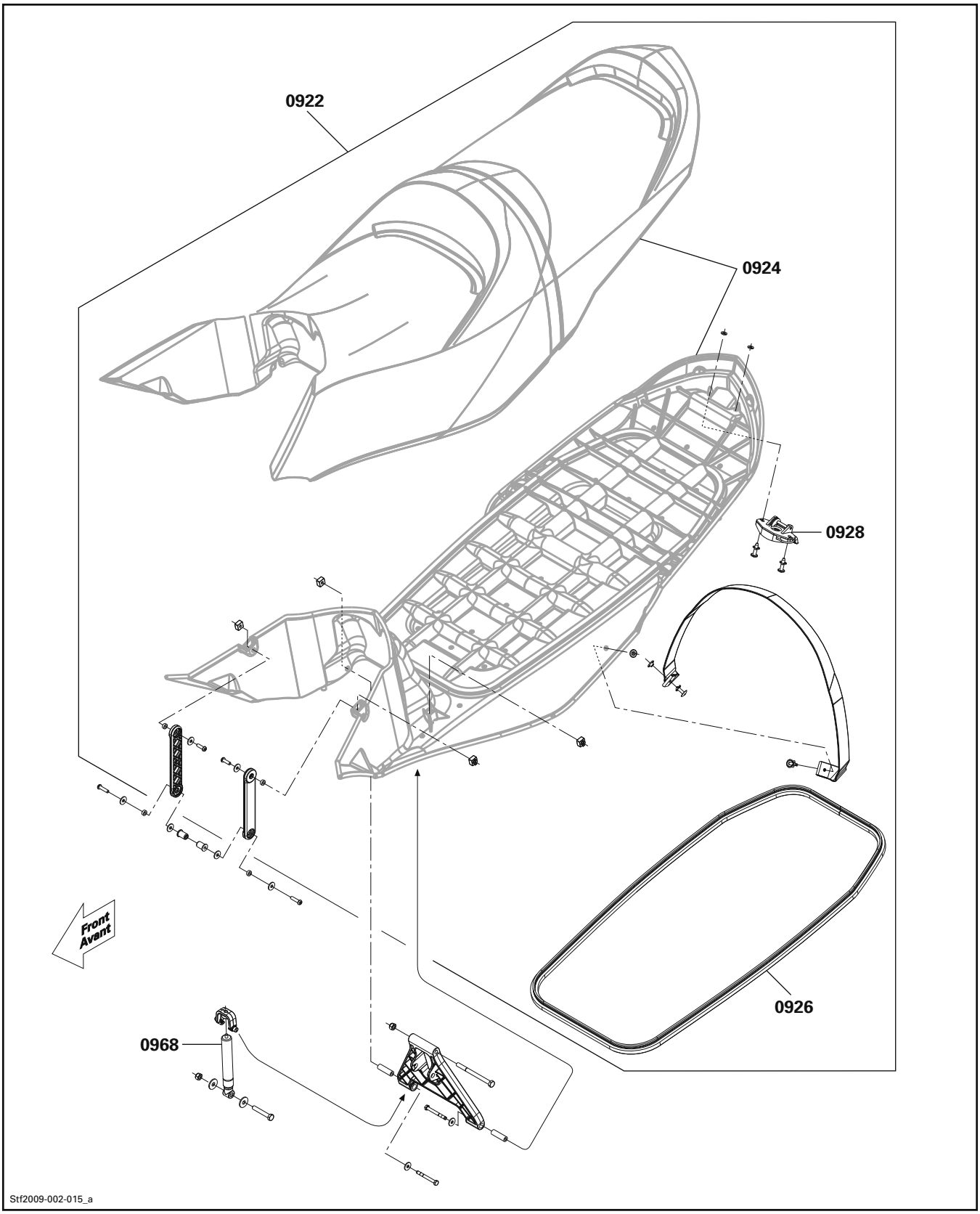
0922
0924
0928
0926
0968
Front
Avant
Stf2009-002-015_a

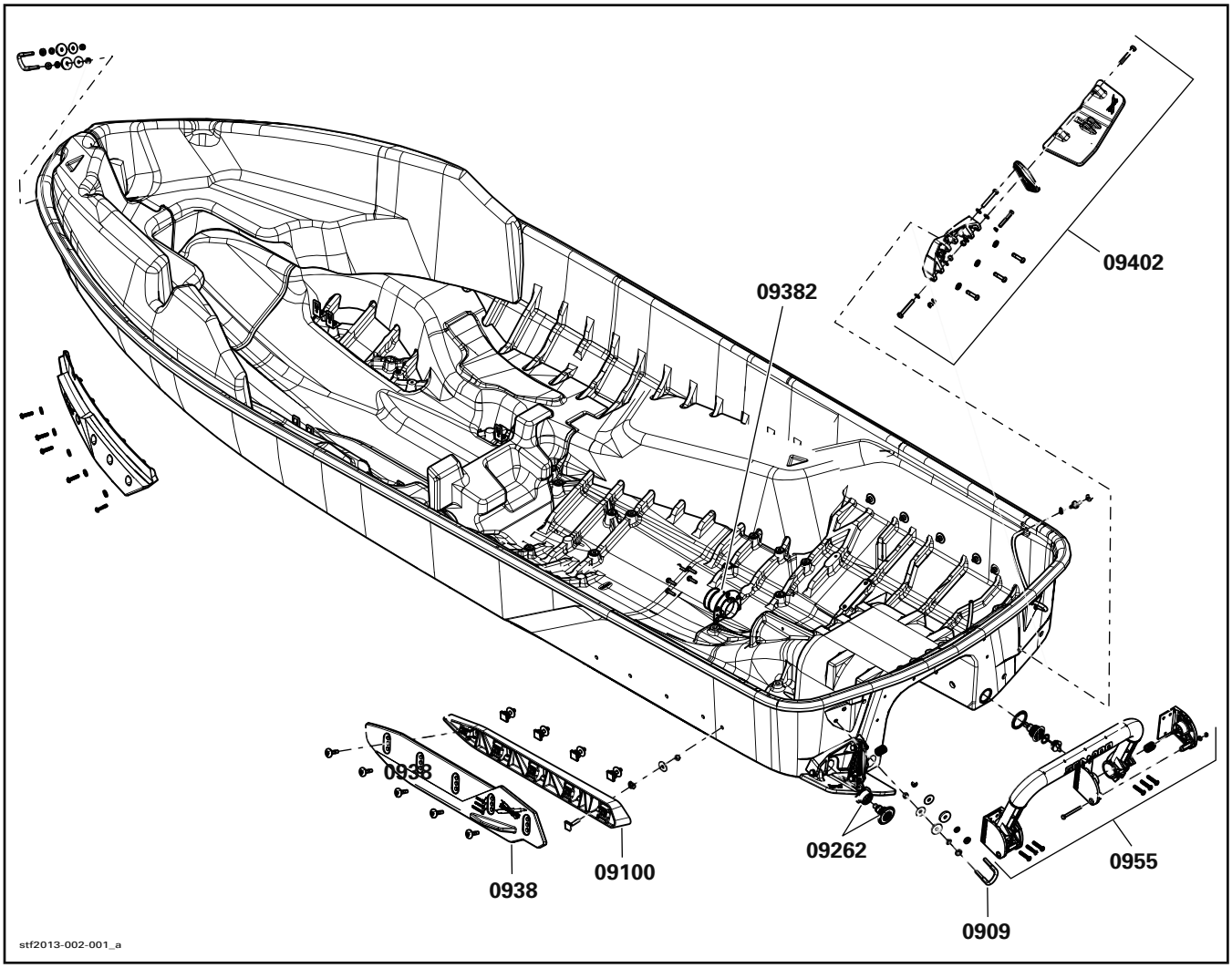
09402
09382
0938
0938
09100
09262
0955
0909
stf2013-002-001_a

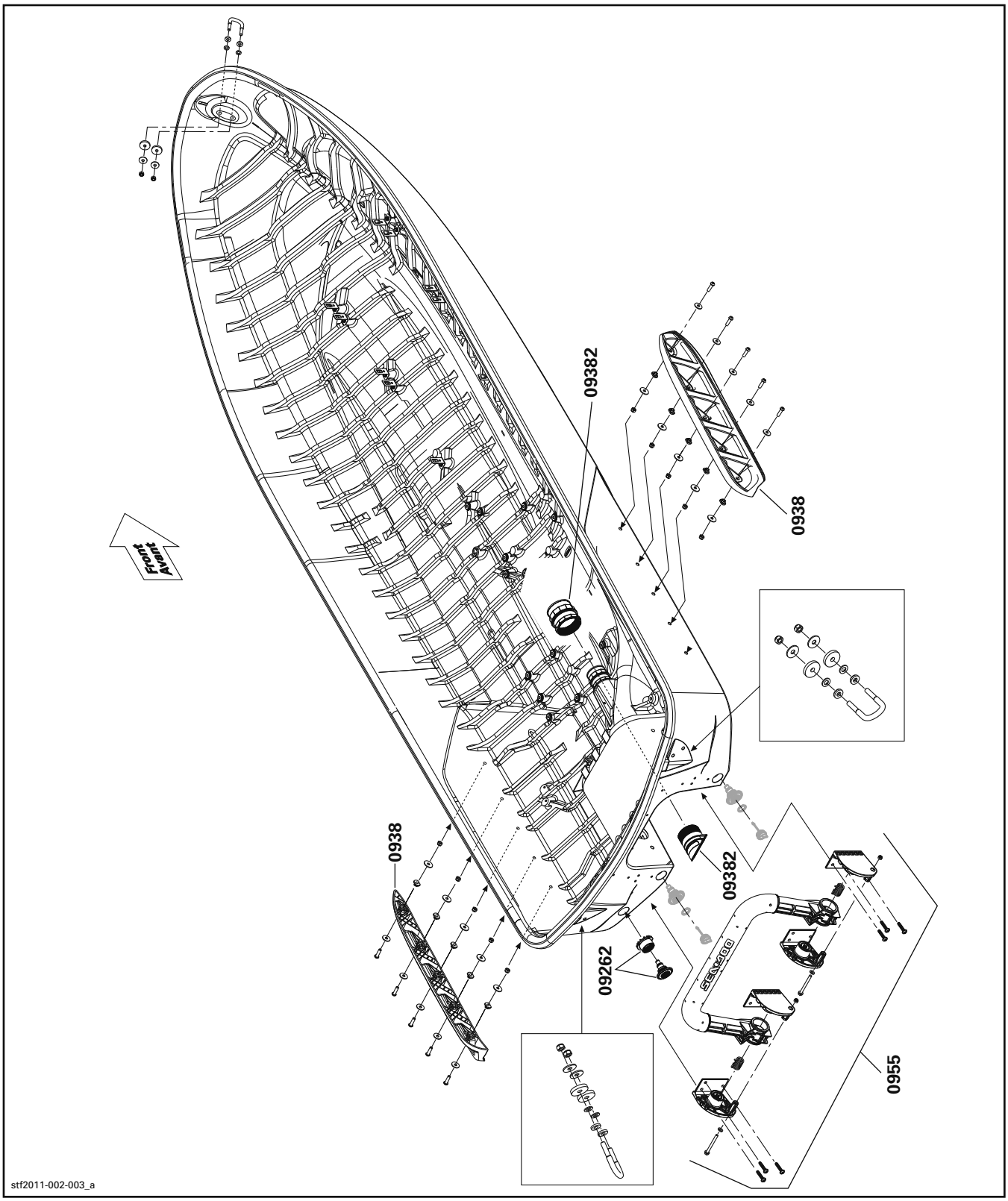
Front
Avant
09382
0938
0938
09382
09262
0955
stf2011-002-003_a

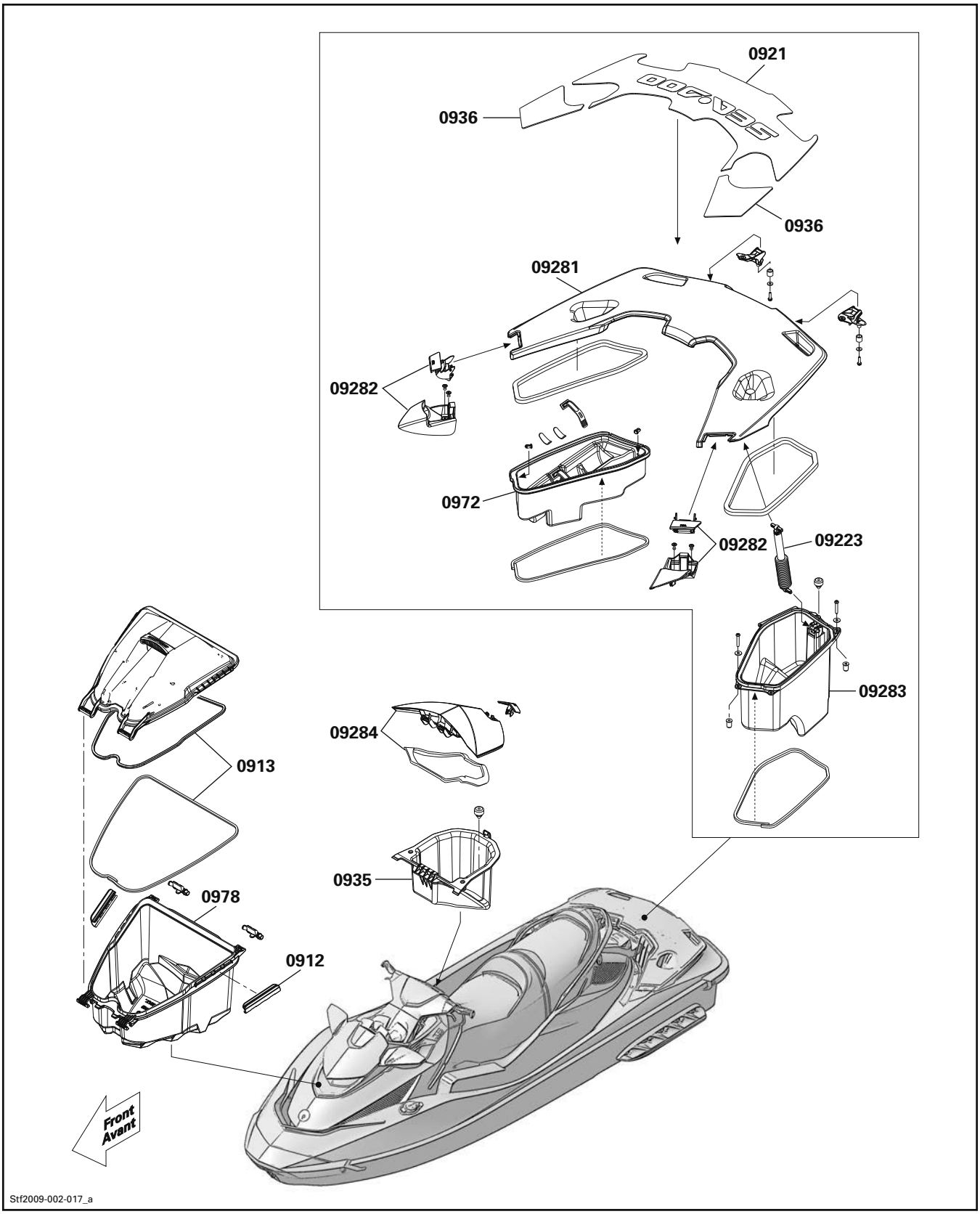
0921
0936
0936
09281
09282
0972
09282
09223
09283
09284
0913
0935
0978
0912
Front
Avant
Stf2009-002-017_a

SYSTEM SYSTÈME	CODE	DESCRIPTION	GTX	GTX / WAKE	RXT	GTX S	GTX iS / RXT aS	GTX / RXT X
			6	7	8	9	10	11
10	**00**	**NO LABOR INVOLVED AUCUNE MAIN-D'OEUVRE**	**0**	**0**	**0**	**0**	**0**	**0**
10	03	BATTERY BATTERIE	0.3	0.3	0.3	0.3	0.3	0.3
10	04	GROUND CABLE CÂBLE DE MASSE	0.4	0.4	0.4	1.0	1.0	0.4
10	05	BATTERY RED CABLE (BATTERY TO STARTER RELAY) CÂBLE ROUGE DE BATTERIE (BATTERIE AU SOLÉNOÏDE)	0.3	0.3	0.3	0.3	0.3	0.3
10	06	BATTERY RED CABLE (STARTER TO STARTER RELAY) CÂBLE ROUGE DE BATTERIE (DÉMARREUR AU SOLÉNOÏDE)	0.4	0.4	0.4	1.0	1.0	0.4
10	11	REGULATOR (ASS'Y)/RECTIFIER (ASS'Y) RÉGULATEUR (COMPLET)/REDRESSEUR (COMPLET)	0.3	0.3	0.3	0.3	0.3	0.3
10	12	MAIN HARNESS (ASS'Y) CÂBLAGE PRINCIPAL (COMPLET)	2.2	2.2	2.2	2.8	2.8	2.2
10	15	BATTERY SUPPORT SUPPORT DE BATTERIE	0.3	0.3	0.3	0.3	0.3	0.3
10	28	D.E.S.S. KEY CLÉ D.E.S.S.	0.3	0.3	0.3	0.3	0.3	0.3
10	46	L.C.D INFO GAUGE (MULTIFUNCTION GAUGE) CADRAN INFO MULTIFONCTION	0.3	0.3	0.3	0.3	0.3	0.3
10	56	ELECTRONIC CONTROL UNIT UNITÉ CONTRÔLE ÉLECTRONIQUE	0.4	0.4	0.4	0.4	0.4	0.4
10	59	DEPTH SENDER PROFONDIMÈTRE					0.3	
10	61	ENGINE HARNESS (ASS'Y) CÂBLAGE MOTEUR (COMPLET)	1.0	1.0	1.0	1.7	1.7	1.0
10	62	STEERING HARNESS (ASS'Y) CÂBLAGE GUIDON (COMPLET)	0.8	0.8	0.8	0.8	0.8	0.8
10	64	OTAS SWITCH INTERRUPTEUR DE L'OTAS	0.6	0.6	0.6	0.6	0.6	0.6
10	65	D.E.S.S. POST BORNE D.E.S.S.	0.7	0.7	0.7	0.7	0.7	0.7
10	66	TOPS SWITCH INTERRUPTEUR TOPS	0.3	0.3	0.3	0.3	0.3	0.3
10	77	STARTING RELAY RELAIS DE DÉMARRAGE	0.3	0.3	0.3	0.3	0.3	0.3
10	78	OTAS ACTUATOR ACTIONNEUR DE L'OTAS	0.7	0.7	0.7	0.7	0.7	0.7
10	79	BRAKE SENSOR CAPTEUR DE FREINAGE	0.3	0.3	0.3	0.3	0.3	0.3
10	80	THROTTLE SENSOR CAPTEUR D'ACCÉLÉRATEUR	0.3	0.3	0.3	0.3	0.3	0.3

SYSTEM SYSTÈME	CODE	DESCRIPTION	GTX	GTX / WAKE	RXT	GTX S	GTX iS / RXT aS	GTX / RXT X
			6	7	8	9	10	11
10	81	CONTROLE SWITCH (RIGHT OR LEFT) INTERRUPTEUR DE CONTRÔLE (DROIT OU GAUCHE)	0.3	0.3	0.3	0.3	0.3	0.3
10	82	ELECTRONIC SUSPENSION MODULE MODULE DE SUSPENSION ÉLECTRONIQUE					0.3	

ELECTRICAL SYSTEM
SYSTÈME ÉLECTRIQUE

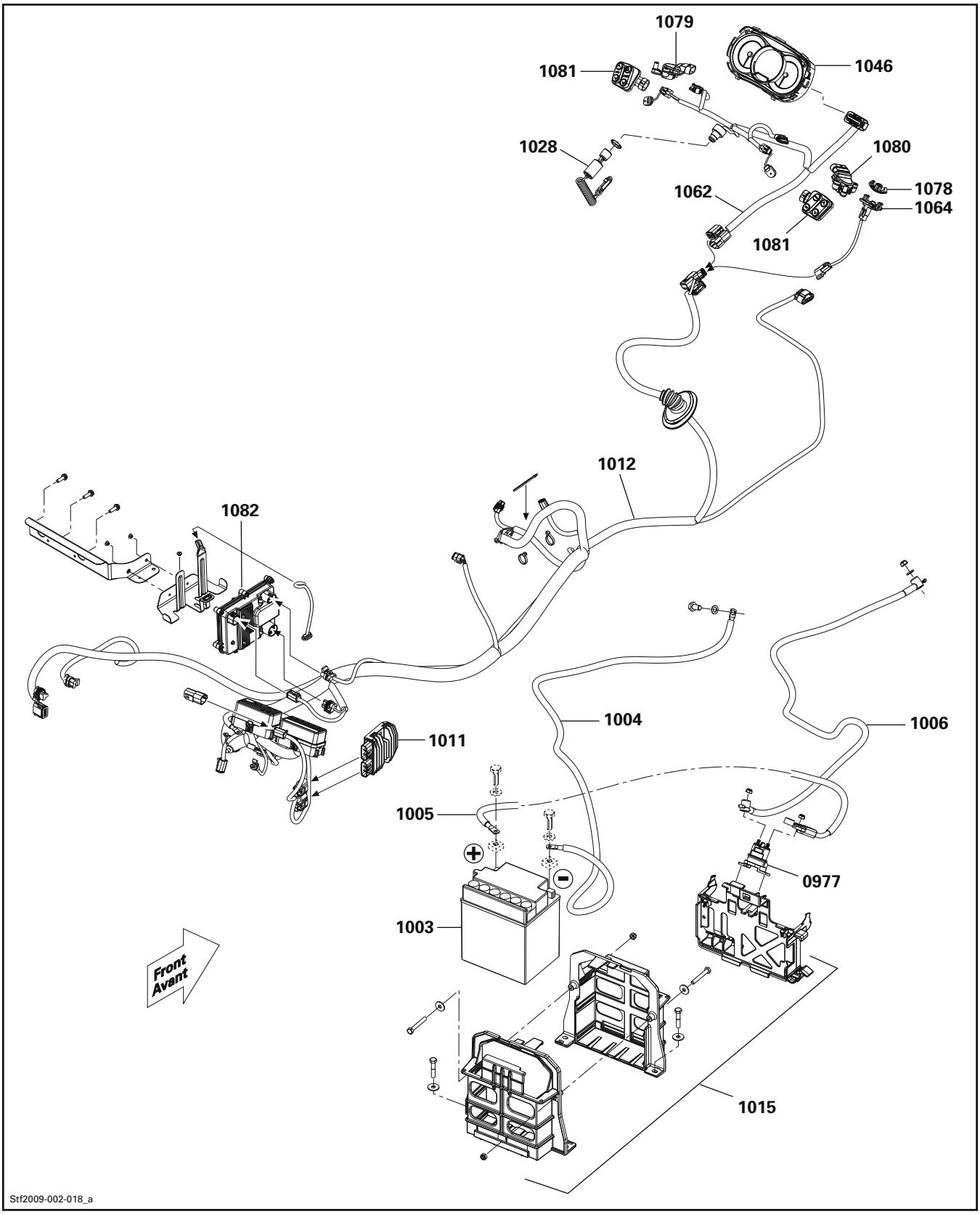

Translate

Printable Version

PWC 2016 What's New_123028_TNG21Y016S00_en

Rate This Article (Average Rating: No Rating) **Language** English Show Properties

Summary:
This is a brief overview of what is new with the 2016 Sea-Doo model line-up.

Type:
General

Training Detail:

2016, What's New?

Key product news:

- MORE POWER with new Rotax 1630 ACE with 300hp
- MORE CONTROL with the expansion of the Ergolock seat
- MORE STORAGE on almost half the lineup
- FASTER BRAKING with the 2nd generation of the iBR system

Also:

- New Palm rest for all models
- New colors or accent colors

SEA-DOO

Rotax 1630 ACE 300

The heart of every BRP product

SEA-DOO

Rotax 1630 ACE 300

BIGGER

MORE EFFICIENT

MORE POWERFUL

SEA-DOO

Rotax 1630 ACE 300

9% more displacement

15% more power

SEA-DOO

Rotax 1630 ACE 300
Maintenance
FREE
SEA-DOO

BEST
Power-to-weight
RATIO
SEA-DOO

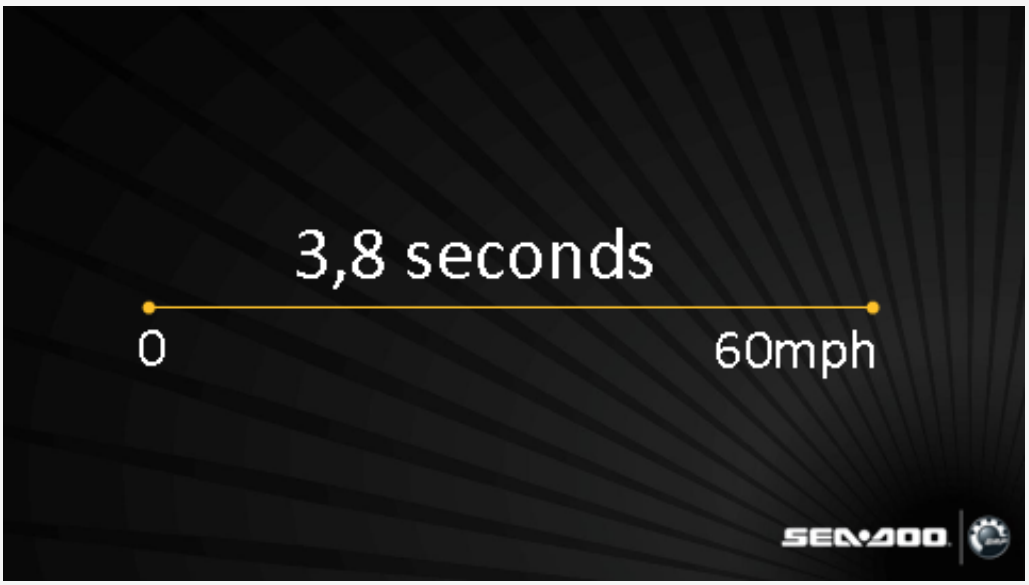
3,8 seconds
0
60mph
SEA-DOO

Rotax 1630 ACE 300

Key improvements vs. 1503

- Longer stroke, more displacement
- New supercharger, more boost
- New, larger, maintenance free intercooler
- New, larger fuel injectors
- New, stronger forged pistons
- New additional heat exchanger and improved cooling

ERGOLOCK SEAT

Narrow seat with knee pockets

RXP-X
RXT models
GTX models
WAKE PRO

ERGOLOCK SYSTEM

1. Ergolock seat
2. Angled footwell wedges
3. Adjustable Ergonomic Steering (A.E.S.)

RXT-X
RXP-X

ERGOLOCK SEAT
Stepped seat design
GTX models
SEA-DOO

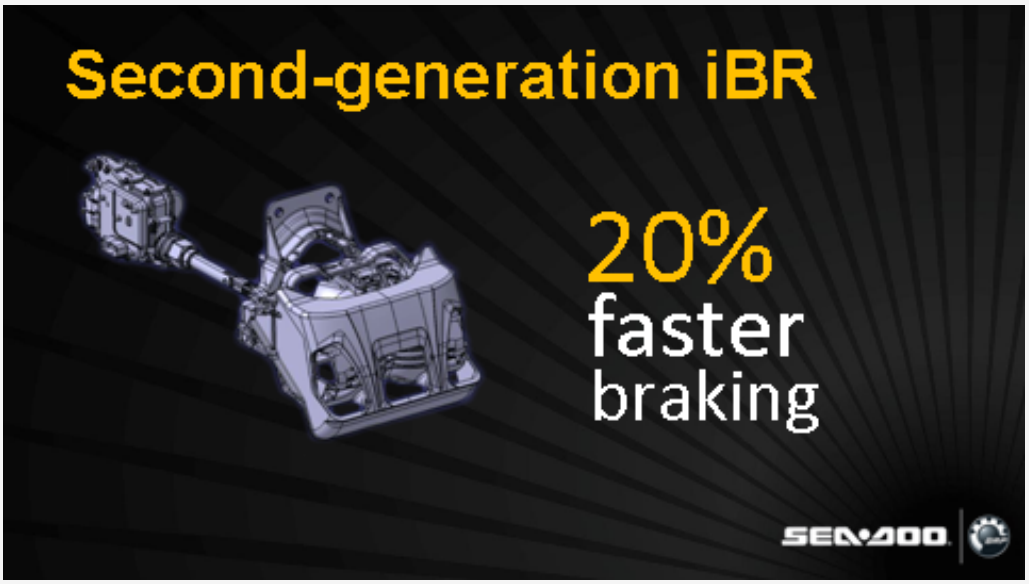
Second-generation iBR
20%
faster
braking
SEA-DOO

EXCLUSIVE
SUSPENSION
iS aS S
SEA-DOO

3x
the storage space
162L in total
Fixed RXT models
Fixed GTX models
WAKE PRO
SEA-DOO

PALM REST
ALL UNITS
START
STOP

2016 Line-Up Overview
REC LITE
RECREATION
LUXURY
PERFORMANCE
TOW SPORTS
Product news
SEA-DOO

Sea-Doo key advantages over competition

	2up	Compact 3up	Full size 3up	Long 3up	Racing 2up
Sea-Doo	Spark	Spark	GTI / GTR	RXT / GTX	RXP
Yamaha	---	V1	VX / VXR	FX / FX Cruiser	FZR / S
Advantage	Most fuel efficient Most affordable Lightest Most playful No competition	Better fuel economy Lower price Lighter weight More playful	More storage More horse power Unique features (Wake and Limited)	More comfort and control with Ergolock More power (215 & 300hp) More storage (fixed units) Ultimate comfort (suspended) Exclusive features (X, Wake and Limited packages)	More power (300hp) Best pwr to weight ratio More control (Ergolock) Best handling (T3 hull) Exclusive X package
iBR	Opt	Opt	2nd Gen	2nd Gen	2nd Gen
RIDE	--	Not available	Std	Std	Not available

SEA-DOO

Summary: Sea-Doo is BEST

Innovation
Affordability
Performance
Control
Comfort
Fuel efficiency

SEA-DOO

Attachment:

First Published By: on 2015-10-02
Last Modified By: on 2015-10-26

Translate

PWC 2016-3 Sea-Doo® Paint Codes & Gelcoat_000123040_SER21Y016S00_en

Product:	**Sea-Doo_watercraft**
Bulletin type:	**Service**
Bulletin no:	**2016-3** (sbs2016-004 en ML)
Revision no:	
Revision date:	
Campaign no.:	
Publication date:	**September, 2015**
Subject:	**Sea-Doo® Paint Codes & Gelcoat**

YEAR	MODEL
2016	All

PAINT CODES

These paints should be used for minor touch-ups only.

Actual finish on hulls is gelcoat, not paint. See further in this bulletin for gelcoat information.

Corresponding paint codes			
BRP Colors		**B.A.S.F., R-M**	**PPG**
B-160	Deep black	85366, RM 85366	DCC 95066 / DBC 9554
B-229	Bright white	757238	DG-DCC 917825
B-257	Jet black metallic	800879	DBC 923322
B-282	Hyper silver	796411	DBC 922715
B-311	Dragon red	862181	FBCH SOL 926050
B-336	Yellow day glow	890196	935099

B-353	White	88643	DCC 98192
B-371	Deep pewter satin	N/A	937662
B-374	Denim blue satin	N/A	940013
B-379	Maldives blue	N/A	940015
B-393	Monolith black	N/A	N/A
N/A: Information not available at time of printing.			

NOTE: Unless otherwise specified, gloss level for all colors is HIGH.

GELCOAT

Spectrum Color is Sea-Doo's official supplier for factory matched gel coat and gel coat repair kits. BRP does not distribute these products.

Orders should be placed directly from **www.Spectrumcolor.com**.

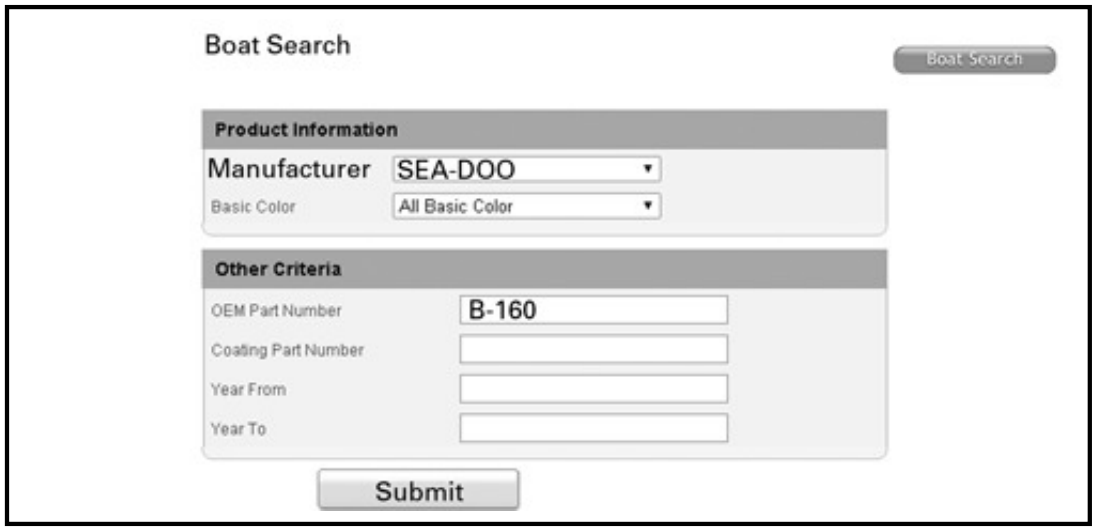

SEARCHING FOR B-160

Spectrum Color offers technical support for all your gel coat questions. Find the phone number on the website.

WATERCRAFT COLOR CODES

The color code are given for painted and gel coated parts only, not for dyed plastics parts.

All black components are paint code B-160 unless otherwise specified.

GTS, GTR, Wake 155, and GTI Series Except LTD

GTI LTD 155

Wake Pro 215

GTX STD and GTX S

GTX LTD SERIES

RXT 260

NO PAINTED PATRS

RXT X SERIES

B-282
B-336
B-393
B-311
B-229

RXP X 300

B-336
B-282
B-393
B-282
B-336
B-393
B-311
B-229

2016 sea-doo.com

SEA-DOO BRP

MAKE YOUR DAY GREAT, WITH SEA-DOO.

The BRP Sea-Doo® brand always provides the thrills and excitement that turn carefree summer days into unforgettable experiences. Whether it's a family looking to play all weekend, friends spending endless hours wakeboarding or racers looking for every advantage on the course. No matter what, when you're on a Sea-Doo watercraft, you're in for an unbelievable day.

And Sea-Doo delivers those great days by leading the industry in cutting-edge design, engineering and innovation. From inventing the world's first on-water brake to creating a whole new category of watercraft with the Sea-Doo SPARK.™ BRP designs the best watercraft on the market, so you can experience the best days on the water. And 2016 is no different. Once again, Sea-Doo moves the industry forward by introducing a NEW Rotax® engine and advanced rider ergonomics. It's what creates even more fun on the water, day after day – year after year.

#1 WATERCRAFT BRAND IN THE WORLD

- ✓ **BEST IN INNOVATION**
  with a long list of firsts: On-water brake, Suspension system, iControl® technologies and more.
- ✓ **BEST IN AFFORDABILITY**
  with the Sea-Doo SPARK.
- ✓ **BEST IN PERFORMANCE**
  with the industry's best power-to-weight ratio.
- ✓ **BEST IN CONTROL**
  with advanced ergonomics and the intuitive on-water brake.
- ✓ **BEST IN COMFORT**
  with the industry's exclusive on-water suspensions.
- ✓ **BEST IN FUEL EFFICIENCY**
  with the lightweight and fun Sea-Doo SPARK.
- ✓ **BEST IN AWARD RECOGNITION**
  with the only brand acknowledged by the U.S. Coast Guard for improving boating safety.

BEST RIDING EXPERIENCE ON THE WATER.

TABLE OF CONTENTS

Find Your Sea-Doo 4
Innovation & Technology 6
PERFORMANCE 10
LUXURY 20
TOW SPORTS 26
RECREATION 28
REC LITE 34
Parts, Accessories and Riding Gear 38
Specifications 40
Stay Connected 43

GET THE SEA-DOO WATERCRAFT THAT'S RIGHT FOR YOU.

Choose from the playful and accessible Sea-Doo SPARK, the powerful RXP®-X®, RXT®-X, or GTX[1] Limited 300 now with a NEW 300-hp Rotax 1630 ACE™ engine, or any of the exciting models in between. Find the Sea-Doo watercraft that's right for you and make the most of every single day on the water.

DISCOVER THE SEA-DOO DIFFERENCE AT SEA-DOO.COM

Use the helpful online tool at sea-doo.com/help-me-choose to learn more about selecting the right ride for you.

PERFORMANCE: TAKE YOUR RIDE FROM FIRST-RATE TO FIRST PLACE.

Now featuring the most powerful Rotax engine ever – the 300-hp Rotax 1630 ACE engine. These are the ultimate performance watercraft, with race-inspired features and the Ergolock™ system that helps you become one with the machine, enabling you to ride with even more confidence and control. For more, see page 10.

LUXURY: THE FINEST FEATURES, THE BEST TECHNOLOGY, THE ULTIMATE RIDE.

The Sea-Doo luxury segment provides NEW ergonomic seating and exclusive suspension options for the ultimate comfort every rider and passenger can enjoy. And for those craving more power than ever, there's the latest edition of the GTX Limited with the NEW Rotax 1630 ACE engine. For more, see page 20.

TOW SPORTS: THE ONLY WATERCRAFT IN THE WORLD DESIGNED EXCLUSIVELY FOR WATERSPORTS ENTHUSIASTS.

Uniquely outfitted to deliver the unmatched thrill and heart-racing excitement of tow sports, and loaded with exclusive features, like a Ski mode, ski pylon and board rack. For more, see page 26.

RECREATION: CHOOSE MORE VERSATILITY FOR MORE PLEASURE.

Nimble rides that offer a ton of standard features, great stability and versatility for all of your favorite recreational activities. They also offer more storage than any watercraft in this category. For more, see page 28.

REC LITE: AFFORDABLE. FUN. IN A CLASS OF ITS OWN.

The easiest way for your family to start enjoying fun on the water is the playful, compact, easy to own and colorful Sea-Doo SPARK. With numerous customizable features and now featuring three NEW, bold colors. No one else offers anything like it. For more, see page 34.

THE NEXT LEVEL OF SEA-DOO INNOVATION IS HERE.

UNBEATABLE ADRENALINE RUSH WITH THE ALL-NEW ROTAX 1630 ACE ENGINE DELIVERING 300 HP.

MORE POWER

UNMATCHED EFFICIENCY

AND THE INDUSTRY'S BEST POWER-TO-WEIGHT RATIO[1]

The NEW Rotax 1630 ACE engine incorporates technology to generate 15% more power with only 9% more displacement, packing an amazing amount of punch into an engine of its size and weight. The compact size of that high-performance engine gives Sea-Doo engineers more design freedom to develop exclusive ergonomic improvements.[2]

BY COMBINING THAT POWER WITH THE NEW ERGOLOCK YOU GET MORE CONTROL AND EVEN MORE CONFIDENCE, SO YOU CAN PUSH YOUR LIMITS EVEN FURTHER.

[1] *Based on engine power disclosed to EPA in kW (RXP-X 300) and information on manufacturer's websites as of publication date.*
[2] *All technical comparisons are made to the Rotax 1503 HO engine.*

UNMATCHED COMFORT AND CONTROL WITH THE EXCLUSIVE SEA-DOO ERGOLOCK.

ERGOLOCK SEAT

1 The narrow seat with deep knee pockets results in a more natural and comfortable riding position – legs closer together and back straighter. The advantage of using your legs to lock in and hold on to the machine reduces upper body fatigue, improves control in any condition and makes you feel like one with the machine. (Available on RXT, RXP-X, GTX and WAKE™ PRO models.)

2 Exclusive to the GTX models, the stepped seat design gives passengers a better view of the action and their surroundings. Additional lateral supports beyond the lumbar area increase passengers' comfort and stability by helping prevent side-to-side movement during the ride.

ERGOLOCK SYSTEM

In addition to the Ergolock seat, the exclusive design includes angled footwell wedges and Adjustable Ergonomic Steering (A.E.S.™) for a complete rider-centric experience. (Available on RXT-X and RXP-X models.)

3 The angled footwell wedges position the knees naturally near the narrow portion of the seat, taking pressure off the ankles.

4 The A.E.S. allows the rider to adjust the width and angle of the handlebar for a customized fit.

And the whole system works together to allow the rider to lock in with his legs, producing less fatigue and more control when turning or cruising.

SEA-DOO INNOVATION LEADS THE WAY.

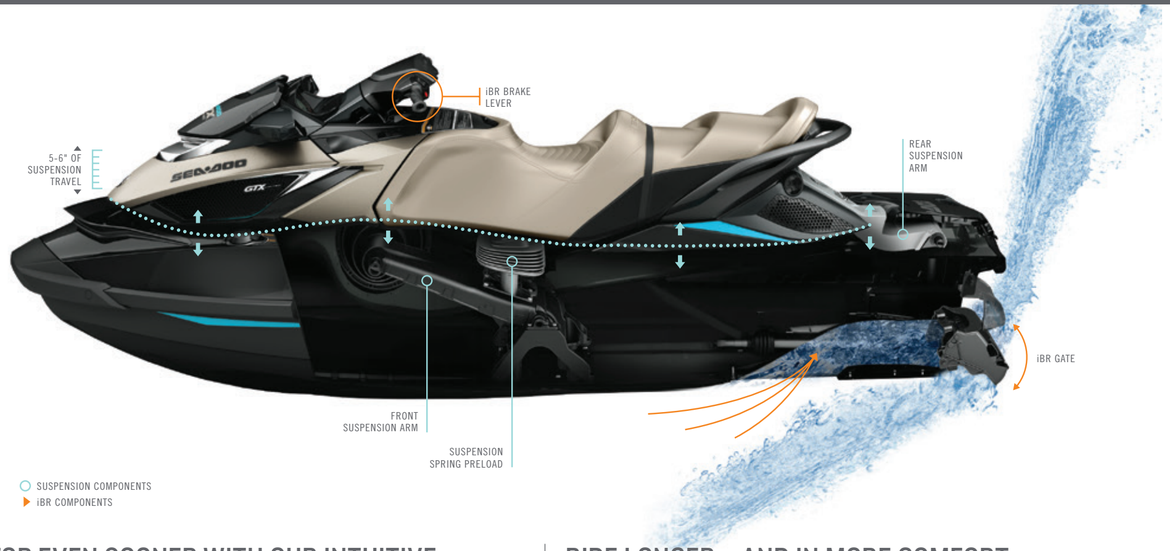

STOP EVEN SOONER WITH OUR INTUITIVE SECOND GENERATION ON-WATER BRAKE.

iBR The Intelligent Brake and Reverse (iBR®) system, now in its eighth year on Sea-Doo watercraft, has been refined for even better performance, allowing you to stop nearly 160 feet (48.75 m) sooner.[1] Just pull the left lever on the handlebar to activate it. Nothing could be easier. It's proven technology that has been recognized since 2009 by the U.S. Coast Guard for improving boating safety.

Sea-Doo using iBR vs. without using iBR

[1] *Based on BRP internal testing.*

RIDE LONGER – AND IN MORE COMFORT – WITH THE INDUSTRY'S ONLY SUSPENSION.

Only the exclusive Sea-Doo suspension system lets you ride longer and in more comfort – in all water conditions. Choose from 3 options to fit your riding style.

iS **Intelligent Suspension:** Calibrates automatically based on weight and water conditions. (Available on the GTX Limited iS® 260 model, page 22.)

aS **Adjustable Suspension:** Manually adjustable, using superior-grade, high-performance shocks made by FOX.℠ (Available on the RXT-X aS™ 260 model, page 14.)

S **Suspension:** Manually adjustable so you can make each ride stiffer or softer. (Available on the Sea-Doo GTX S™ 155 model, page 24.)

YEAR AFTER YEAR.

PRECISION HULL DESIGN TO COMPLEMENT EVERY RIDING STYLE.

SPARK Hull

GTI Hull

S³ Hull

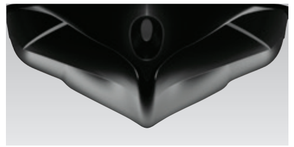

T³ Hull

SPARK HULL

A shorter, lighter platform with flatter V-shaped hull, it's easy to handle and ideal for flatter water and small chop. Can still be used in rougher conditions for an exciting and challenging ride. (Available on all SPARK models.)

GTI HULL

A medium-sized platform with a moderate V-shaped hull. Forgiving and nimble for a versatile ride in smooth and moderate water conditions. (Available on the GTS™ 130, GTI™, WAKE 155 and GTR™ 215 models.)

S³ HULL®

Its stepped design is the first – and only – of its kind. With a longer platform and rough-water-inspired, deep V shape, it is stable, predictable and remains glued to the water in choppy conditions. (Available on the GTX, RXT and WAKE PRO 215 models.)

T³ HULL™

Exclusive to the Sea-Doo RXP-X 300, it cuts effortlessly through water. Round edges in the front allow for more precise cornering and let you lean in at a sharper angle. (Available on the RXP-X 300 model.)

GREATER ENGINE PROTECTION WITH CLCS.

CLCS Only Sea-Doo watercraft feature a Closed-Loop Cooling System (CLCS). It uses coolant to keep the engine running at ideal temperatures and also blocks out corrosive saltwater and debris from the engine.

BETTER GRIP WITH THE NEW PALM REST

NEW HANDLEBAR PALM REST

Supports the palm and helps position the wrist to provide more comfort and give the driver a better grip. (Available on all models.)

ENJOY VERSATILITY, PRECISION AND FUEL EFFICIENCY.

iTC Intelligent Throttle Control (iTC™) offers specific driving modes for unique experiences and the most advanced throttle system on a watercraft, giving you better fuel economy and lower operating costs.

- **ECO™ Mode:** Exclusive feature that generates up to 46% improved fuel efficiency.[2]
- **Cruise Control:** Activity-specific controls. Set your speed for cruising, tow sports, navigating no-wake zones and more.
- **Touring and Sport Modes:** Set different throttle responses to suit your riding style with the touch of a button.
- **Ski Mode:** Choose from 5 personalized acceleration profiles for a perfect launch and consistent pace during every ride. It helps make every rider an expert in no time.

[2] *Based on internal testing. Fuel consumption varies per model and engine package.*

Professional drivers shown under ideal/controlled conditions. Do not attempt. Not all riding conditions are appropriate for inexperienced or beginner riders.

ROTAX 1630 ACE ENGINE – It is the most powerful engine on a Sea-Doo watercraft. Proven ACE (Advanced Combustion Efficiency) technology and industry-best power-to-weight ratio[1] delivers ultimate performance.

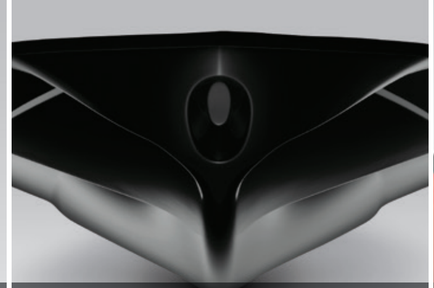

T³ HULL – Innovative, multistage design with extreme hard chines in the back and soft chines in the front. Allows for more precise cornering, enhances lean-in, cuts water and tracks better; extremely responsive.

ERGOLOCK SYSTEM – A narrow racing seat, specially angled footwell wedges and Adjustable Ergonomic Steering (A.E.S.) allow you and the machine to become one. Locking in your body provides even better handling and control.

RXP-X 300

iTC / iBR / T³ / CLCS / ECO

RIDE WITH THE WINNING ADVANTAGE OF THE INDUSTRY'S BEST POWER-TO-WEIGHT RATIO.[1]

The ultimate top-of-the-line racing watercraft combines power, handling and control like nothing else on the water. And with the NEW 300-hp Rotax 1630 ACE engine, nothing else will come close to you on the buoy course. Use the Ergolock system to leverage leg muscles for gripping the watercraft and harder cornering. The deep V shape of the T³ Hull will cut through the water precisely, so you can lean deeper into turns. This machine does much more than push the limits of race riding. It pushes you to the front of the pack.

COLOR OPTIONS: **NEW** Lava Red & Monolith Black Satin **NEW** White & Dayglow Yellow

[1] Based on engine power disclosed to EPA in kW (RXP-X 300) and information on manufacturer's websites as of publication date.

ADJUSTABLE REAR SPONSONS – An efficient design that improves lateral stability. Three-position adjustable for your skill level and riding environment.

ADDITIONAL COLOR OPTION: LAVA RED & MONOLITH BLACK SATIN

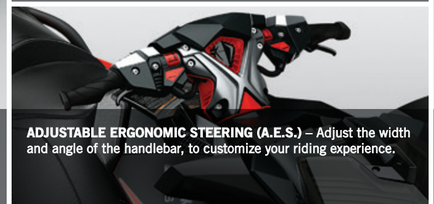

ADJUSTABLE ERGONOMIC STEERING (A.E.S.) – Adjust the width and angle of the handlebar, to customize your riding experience.

SEA-DOO RIDING BOOTS AND AMPHIBIOUS RIDING GOGGLES (OPTIONAL) – The strong, lightweight goggles float and are designed to conform to your face while offering 100% UV protection. High-cut neoprene boots provide added comfort, grip and protection.

ROTAX 1630 ACE ENGINE –The most powerful engine on a Sea-Doo, ever. Delivering a breathtaking 300 hp and powered by proven ACE (Advanced Combustion Efficiency) technology for ultimate performance.

ADJUSTABLE REAR SPONSONS – An efficient design that improves lateral stability. Three-position adjustable for your skill level and riding environment.

ERGOLOCK SYSTEM – A narrow racing seat, specially angled footwell wedges and Adjustable Ergonomic Steering (A.E.S.) allow you and the machine to become one. Locking in your body provides even better handling and more control.

iTC / iBR / S³ / CLCS / ECO

RXT-X 300

LOCK IN AND EXPERIENCE THE RUSH OF MORE POWER AND MORE CONTROL THAN EVER BEFORE.

Built for large bodies of water, rougher conditions and riders who never let that slow them down. Now with the Rotax 1630 ACE engine and exclusive Ergolock system that lets you ride longer with less fatigue. Your legs "lock in" to the machine for added control, while letting you relax your upper body. Experience performance riding with more confidence to push your limits and take control of the power.

COLOR OPTIONS: **NEW** Lava Red & Monolith Black Satin **NEW** White & Dayglow Yellow

TILT AND ADJUSTABLE ERGONOMIC STEERING (A.E.S.) – Tailor it to your personal riding preference and position, so ergonomics work for you on the water. The fully adjustable handlebar let you customize your riding experience even further.

ADDITIONAL COLOR OPTION: LAVA RED & MONOLITH BLACK SATIN

X-GAUGE WITH BOOST INDICATOR – X-Gauge with additional functions such as time/distance to empty, top/average speed/RPM, lap timer and engine temperature.

FORCE PULLOVER PFD AND MEN'S X-TEAM NEOPRENE RIDING JACKET (OPTIONAL) – Anatomical cut with large armholes and strategically placed mesh drain panels for riding comfort. The versatile Riding Jacket can be worn over a Personal Flotation Device (PFD) or separately.

ADJUSTABLE SUSPENSION (aS) – High-performance adjustable suspension uses a superior-grade, high-performance shock made by FOX,™ with full preload and compression manual adjustability.

ADJUSTABLE TRIM TABS – Designed to fine-tune the attitude of the watercraft and provide better parallelism to the water. Five distinct positions provide ample adjustment range to cover all water conditions.

ERGOLOCK SEAT – A narrow racing seat places your knees closer together in a natural riding position while improving the transition into standup riding.

iTC / iBR / aS / S³ / CLCS / ECO

RXT-X aS 260

THE INDUSTRY-EXCLUSIVE SUSPENSION GENERATES THE BEST OFFSHORE PERFORMANCE.

The only offshore riding watercraft with a suspension system, the RXT-X aS 260 lets you manually adjust the suspension to dictate how it will respond to water conditions. It provides more than just comfort – it lets you stay focused, relaxed and ride longer with less fatigue. Now in conjunction with our Ergolock seat and fully adjustable handlebar, this is performance riding that prepares you for large bodies of water.

BOW STABILIZER – Provides lateral stability in rougher water conditions, plus anti-dive to reduce bow diving.

TILT AND ADJUSTABLE ERGONOMIC STEERING (A.E.S.) – Tailor it to your personal riding preference and position, so ergonomics work for you on the water. The fully adjustable handlebar let you customize your riding experience even further.

SEA-DOO CARRIER DRY STORAGE BAG BY OGIO™ (OPTIONAL) – Completely waterproof with plenty of storage for stowing away your gear and keeping it dry.

ROTAX 1503 HO ENGINE – Supercharged, external intercooled engine that provides reliable high performance in fresh or saltwater, increased torque at low RPM, and optimized power at all RPM levels and throttle positions.

HIGH-PERFORMANCE VTS™ – Easily accessible Variable Trim System on the handlebar lets you fine-tune handling based on rider preference, water conditions and number of passengers.

ERGOLOCK SEAT – A narrow racing seat places your knees closer together in a natural riding position while improving the transition into standup riding.

iTC / iBR / S³ / CLCS / ECO

RXT 260

POWER AND PERFORMANCE, NOW MORE ACCESSIBLE THAN EVER.

Now with an improved riding position and three times more storage to give you a better riding experience – along with the performance essentials of higher-priced models. You get control, precision and handling, plus great horsepower for this price level. And the stepped S³ Hull means you'll stay glued to the water. The RXT 260 is calibrated for pure performance riding.

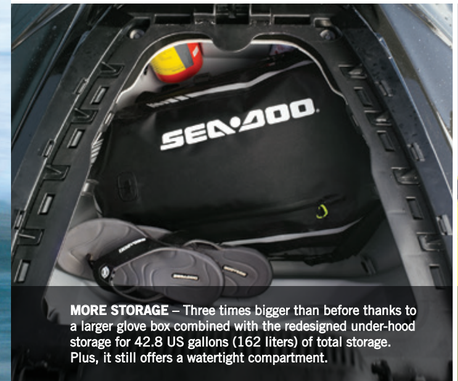

MORE STORAGE – Three times bigger than before thanks to a larger glove box combined with the redesigned under-hood storage for 42.8 US gallons (162 liters) of total storage. Plus, it still offers a watertight compartment.

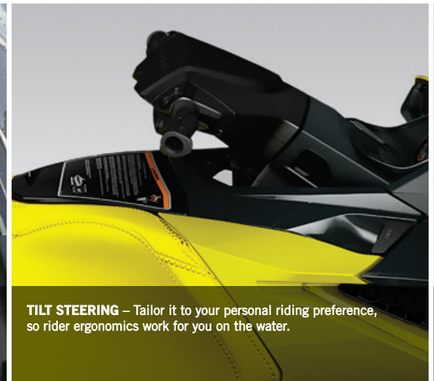

TILT STEERING – Tailor it to your personal riding preference, so rider ergonomics work for you on the water.

COVER (OPTIONAL) – Its strapless design offers easy installation, and the solution-dyed fabric increases UV resistance while making it simple to handle. The patented air-release ventilation system is designed for trailering.

SUPERCHARGED ENGINE – Offers more power than the closest competition.[1]

[1] Source: Air Resources Board website.

FRONT STORAGE – More storage than the closest competitive model for stowing away your gear.[2]

[2] Source: Manufacturer's website. Based on similarly priced models.

HIGH-PERFORMANCE VTS – Easily accessible Variable Trim System on the handlebar lets you fine-tune handling based on rider preference, water conditions and number of passengers.

iTC / iBR / CLCS / ECO

GTR 215

NIMBLE PERFORMANCE. PEAK VALUE.

This is the best value of any performance watercraft package. And it comes with a supercharged engine that offers more power than the competition. The GTR 215 model also gives you better handling and versatility. That's because it can be tuned easily with aftermarket accessories. You'll also stay dryer than on other competitive models thanks to the anti-splash design in its hull.

iBR (INTELLIGENT BRAKE AND REVERSE) SYSTEM – Exclusive to Sea-Doo watercraft. Stop close to 160 feet (48.75 m) sooner[3] with our second generation on-water brake. For more control and effortless docking. *[3] Based on BRP internal testing.*

DRIVING CENTER WITH ECO MODE – Digital information center featuring touring and sport modes, fuel consumption (current and average), and fuel-saving ECO mode.

FRONT STORAGE TRAY (OPTIONAL) – The 3.2 US gallons (12 L) capacity offers convenient and useful storage space.

GTX Limited 300 model shown

ROTAX 1630 ACE ENGINE – It is the most powerful engine ever available on a Sea-Doo watercraft. Powered by proven Advanced Combustion Efficiency technology. (Available on the GTX Limited 300 model.)

ERGOLOCK SEAT WITH STEPPED DESIGN – The narrow seat places your knees closer together in a natural riding position, while the stepped seat design provides more lateral support and stability for you and your passengers.

MORE STORAGE – Pack all your gear and keep it dry, thanks to the watertight front storage. Plus, enjoy the huge NEW storage compartment below it. It's more than three times bigger than ever before.

iTC / iBR / S³ / CLCS / ECO

GTX LIMITED 300 & GTX LIMITED 215

THE HEIGHT OF LUXURY COMBINED WITH HIGH PERFORMANCE.

These luxury machines provide comfort, countless unique features and two engine options for a riding experience that meets, and exceeds your needs. The GTX Limited 300 model includes the remarkable power of the NEW Rotax 1630 ACE engine, the most powerful engine ever featured in a Sea-Doo watercraft. Both models include the S³ Hull for stable, predictable performance in rougher conditions, and our NEW Ergolock seat with stepped design provides even more comfort for you and your passengers.

EXCLUSIVE LIMITED PACKAGE – Watercraft cover, removable dry bag, safety kit and exclusive coloration. Plus, depth finder and speed ties, glove box organizer, water temperature display, high-performance VTS and more.

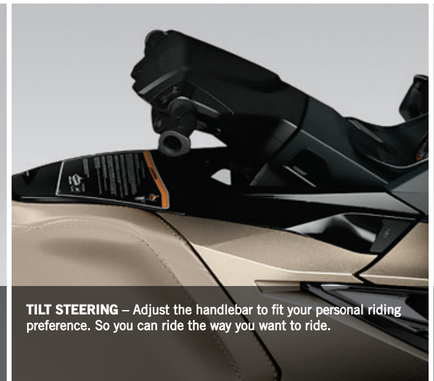

TILT STEERING – Adjust the handlebar to fit your personal riding preference. So you can ride the way you want to ride.

ELEMENT RIDING SUIT (OPTIONAL) – Separate jacket and pants to wear under your Personal Flotation Device (PFD) to keep you warm during cooler weather. The material is fast drying, breathable and offers good wind protection.

iS (INTELLIGENT SUSPENSION) – The hull moves independently of the upper deck, isolating rider and passengers from the impact of rough water.

ERGOLOCK SEAT WITH STEPPED DESIGN – The narrow seat places your knees closer together in a natural riding position, while the stepped seat design provides more lateral support and stability for you and your passengers.

EXCLUSIVE LIMITED PACKAGE – Watercraft cover, removable dry bag, safety kit and exclusive coloration. Plus, depth finder and speed ties, glove box organizer, water temperature display, high-performance VTS and more.

iTC / iBR / iS / S³ / CLCS / ECO

GTX LIMITED iS 260

ULTIMATE COMFORT COMES STANDARD.

Meet the most comfortable luxury watercraft on the market. Only the GTX Limited iS 260 comes standard with our industry-exclusive Intelligent Suspension (iS). It automatically responds to water conditions to provide maximum stability and comfort. All you have to do is ride. With the NEW Ergolock seat, plus tilt steering, cruise control and much more, it all adds up to the ultimate in comfortable luxury.

WATERTIGHT REMOVABLE STORAGE BIN – Keep your gear safe and dry with ample storage space.

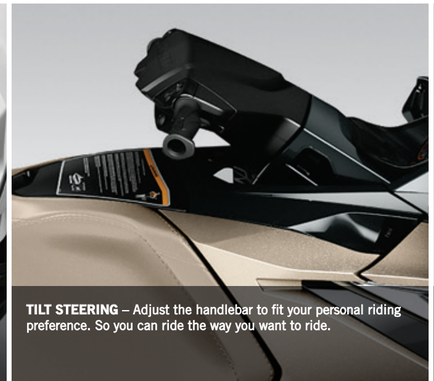

TILT STEERING – Adjust the handlebar to fit your personal riding preference. So you can ride the way you want to ride.

AIRFLOW PFD (OPTIONAL) – Enhanced fit with lumbar comfort zone, strategically placed mesh drain panels and interior EVA molding that keeps the Personal Flotation Device (PFD) surface away from the skin.

GTX 155 model shown

S SUSPENSION – Manually adjustable suspension to give you a smooth ride in all water conditions, it features 5.5 inches (13.97 cm) of travel. (Available on the GTX S 155 model.)

ERGOLOCK SEAT WITH STEPPED DESIGN – The narrow seat places your knees closer together in a natural riding position, while the stepped seat design provides more lateral support and stability for you and your passengers.

FRONT STORAGE WITH WATERTIGHT REMOVABLE BIN – Plenty of room for stowing away your gear and keeping it dry. The GTX 155 also offers additional storage below the watertight removable bin.

iTC / iBR / S / S[3] / CLCS / ECO

GTX S 155 & GTX 155

LUXURIOUS VALUE: ALWAYS IN STYLE.

Get luxurious comfort and convenience for an unbeatable value. With features like our Ergolock seat with stepped design that places both rider and passengers in a more natural, relaxed position. There's more storage for all your gear on the GTX 155, and the GTX S 155 offers true suspension for a smooth ride in all conditions. Luxury is no longer out of reach. It's right here, just begging you to go for a ride.

[1] *GTX S 155 model.*

TILT STEERING – Fit it to your personal riding preference, so rider ergonomics work for you on the water.

CRUISE CONTROL AND NEW PALM REST – Set your speed for cruising, tow sports, navigating a no-wake zone and more. The NEW handlebar palm rest supports your palm and helps position your wrist to provide more comfort and give you a better grip.

SNAP-IN FENDERS (OPTIONAL) – Protect your watercraft with easy-to-install and remove fenders designed specifically for Sea-Doo watercraft. Requires Snap-in Fenders installation kit.

WAKE 155 model shown

SKI MODE – This exclusive Sea-Doo feature makes any driver an expert in no time. The five, unique acceleration profiles make it easy for you to maintain your speed and for boarders to shred like the pros.

3-POSITION SKI PYLON – Retractable so it stows away when not in use. Features spotter handgrips and rope storage. (Optional Speed Tie shown.)

ERGOLOCK SEAT – The sculpted seat is narrow between the legs and slightly higher in the rear. For more comfort when touring and more confidence when cornering. (Available on the WAKE PRO 215 model.)

WAKE PRO 215 & WAKE 155

iTC / iBR / S³ / CLCS / ECO

THE ONLY WATERCRAFT DESIGNED SPECIFICALLY FOR TOW SPORTS.

If you're looking to spend your days catching some air, carving some wakes and pumping some adrenaline, then we've got your ride. Both Sea-Doo WAKE models include a retractable ski pylon with a high tow point that keeps the rope out of the water and keeps you in the wake. Plus, they feature our exclusive Ski mode and a removable board rack. The WAKE PRO 215 takes thrilling tow sports fun even further with a supercharged engine; the exclusive S³ Hull for added stability when towing wakeskaters and wakeboarders; NEW, larger storage area and more comfortable ergonomics. These watercraft are the reason Sea-Doo is the official partner of the NIKE℠ Wakeskate Team.

COLOR OPTIONS: **NEW** White & Denim Blue Satin (WAKE PRO 215) **NEW** White & Belize Blue (WAKE 155)

[1] WAKE PRO 215 model.

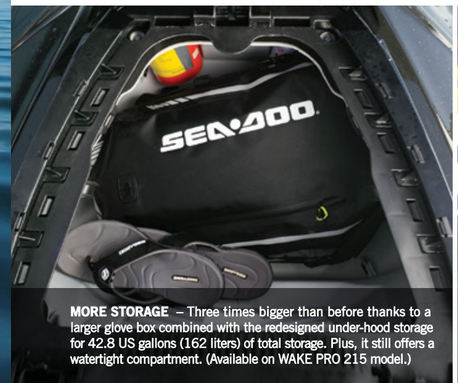

MORE STORAGE – Three times bigger than before thanks to a larger glove box combined with the redesigned under-hood storage for 42.8 US gallons (162 liters) of total storage. Plus, it still offers a watertight compartment. (Available on WAKE PRO 215 model.)

BOARD RACK – Comes standard. Removable; carries your board on the side to get to your favorite riding spot.

WAKE PRO 215: WHITE & DENIM BLUE SATIN

SHOCK TUBE (OPTIONAL) – Protects passengers from any ski rope kick-back and keeps ski ropes away from impeller. Made with a durable nylon cover over closed-cell foam.

LIMITED PACKAGE – Includes watercraft cover, removable dry storage bag, safety kit and exclusive coloration for this model. Other package features include time/distance to empty, altitude and high-performance VTS.

CRUISE CONTROL – An activity-specific cruise control lets you set your speed for cruising, tow sports, navigating a no-wake zone and more.

HIGH-PERFORMANCE VTS – Easily accessible Variable Trim System on the handlebar lets you fine-tune handling based on rider preference, water conditions and number of passengers.

iTC / iBR / CLCS / ECO

GTI LIMITED 155

ULTIMATE VERSATILITY AND FUN.

The Sea-Doo GTI Limited 155 offers exclusive features in the Limited package, like unique coloration, watercraft cover and high-performance VTS. You also get a watercraft with the largest storage space in its category and the proven Sea-Doo Intelligent Brake and Reverse (iBR) system.

SKI TOW EYE – Pull your friends and family with this easy setup that lets you dive into tow sports.

TOURING SEAT – Plush, ergonomic design provides maximum comfort and support for driver and passenger.

SEA-DOO SPEED TIE (OPTIONAL) – Fully integrated and retractable watercraft mooring system provides seven feet of retractable dock line that effortlessly stows out of site when not in use.

GTI SE 130 model shown in Black & White

TOURING SEAT – Plush, ergonomic design provides maximum comfort and support for driver and two passengers.

REBOARDING STEP – Makes it easy to get back on after having fun in the water. Fold-down design.

iBR (INTELLIGENT BRAKE AND REVERSE) SYSTEM – Exclusive to Sea-Doo watercraft. Stop close to 160 feet (48.75 m) sooner[1] with our second generation on-water brake. For more control and effortless docking.

[1] *Based on BRP internal testing.*

iTC / iBR / CLCS / ECO

GTI SE 155 & GTI SE 130

KEEP YOUR FAMILY RIDING LONGER WITH ADDED FEATURES AND EVEN MORE VERSATILITY.

Year after year, families choose the Sea-Doo GTI SE models to help them get all the fun they want from their time on the water. The exclusive Intelligent Brake and Reverse (iBR) system lets them ride with added peace of mind and increased confidence and control, especially when docking. And features like the touring seat, reboarding step and VTS add even more versatility – and endless family fun.

COLOR OPTIONS: **NEW** Black & White (GTI SE 130) Maldives Blue & White

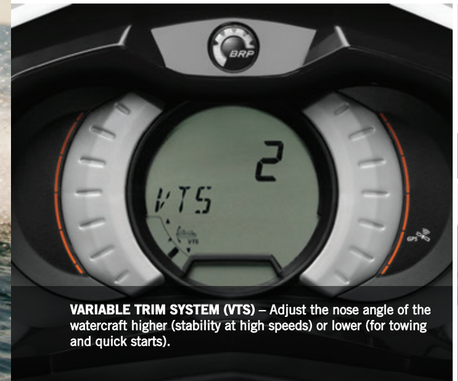

VARIABLE TRIM SYSTEM (VTS) – Adjust the nose angle of the watercraft higher (stability at high speeds) or lower (for towing and quick starts).

ADDITIONAL COLOR OPTION: MALDIVES BLUE & WHITE

ECO MODE – Automatically determines the most economical power delivery for the greatest fuel economy.

RETRACTABLE SKI PYLON (OPTIONAL) – High-rise pylon keeps rope out of water. Features built-in spotter grab handles and retracts out of the way when not in use.

GTI 130 model shown in White & Maldives Blue

iBR (INTELLIGENT BRAKE AND REVERSE) SYSTEM – Exclusive to Sea-Doo watercraft. Stop close to 160 feet sooner (48.75 m)[1] with our second generation on-water brake. For more control and effortless docking. (Available on the GTI 130 model.)

[1] Based on BRP internal testing.

FRONT STORAGE – The largest storage space in its category[2] (30.8 US gallons / 116.6 L) lets you store plenty of gear.

[2] Manufacturer's website. Based on similarly priced models.

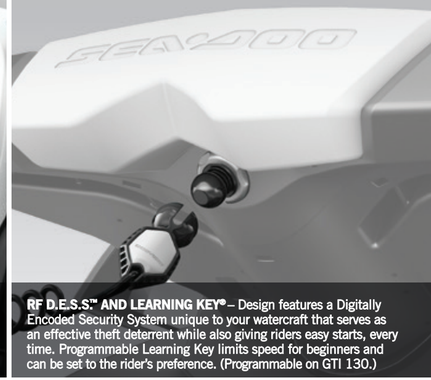

RF D.E.S.S.™ AND LEARNING KEY® – Design features a Digitally Encoded Security System unique to your watercraft that serves as an effective theft deterrent while also giving riders easy starts, every time. Programmable Learning Key limits speed for beginners and can be set to the rider's preference. (Programmable on GTI 130.)

iTC / iBR / CLCS / ECO

GTI 130 & GTS 130

VERSATILITY FOR THE WHOLE FAMILY. WITH A SURPRISINGLY FUN STICKER PRICE.

Introduce your family to great days on the water, and take advantage of standard features often found on higher-priced models. Choose from multiple operating modes to match riding preference and generate optimal fuel efficiency. The GTI 130 is also available with the improved second generation Intelligent Brake and Reverse (iBR) system.

COLOR OPTIONS: White & Maldives Blue (GTI 130) White & Manta Green (GTI 130) White & Orange Crush (GTS 130)

[1] GTI 130 model.

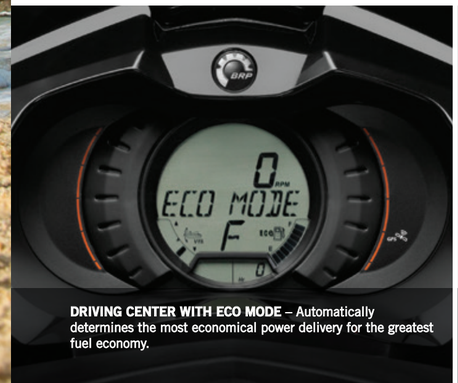

DRIVING CENTER WITH ECO MODE – Automatically determines the most economical power delivery for the greatest fuel economy.

HANDLEBAR WITH NEW PALM REST – Supports the palm and helps position the wrist to provide more comfort and give the driver a better grip.

ADDITIONAL GTI 130 COLOR OPTION: WHITE & MANTA GREEN

GTS 130 COLOR OPTION: WHITE & ORANGE CRUSH

Chili Pepper, Blueberry and Key Lime SPARK watercraft shown with optional accessories.

POLYTEC™ – Exclusive to Sea-Doo, this low-density, high-impact composite material provides just the right combination of elasticity of polypropylene to absorb impact and rigidness of long fiber glass to ensure structural integrity.

EXOSKEL™ – Minimalist architecture that keeps only the essential structural parts in the front section. It reduces weight while creating a strong, modern and cutting-edge design that defines the unique and playful nature of the Sea-Doo SPARK.

ROTAX 900 ACE / 900 HO ACE ENGINES – The Sea-Doo SPARK Rotax 900 ACE engine is the most fuel-efficient on the market[1] using just 1.94 US gallons (7.34 L) of fuel per hour. The higher-horsepower, faster-accelerating Rotax 900 HO ACE uses just 2.4 US gallons (9 L) per hour.

iTC / iBR / CLCS

SPARK

UNBEATABLE FUN FROM THE MOST POPULAR AND ACCESSIBLE WATERCRAFT.

The most fun and accessible watercraft you can buy today. Sea-Doo SPARK exists in a class of its own – the most affordable, fuel efficient[1] and easiest to own watercraft on the market. Its compact, lightweight design – the lightest in the industry – makes it playful to ride and easy to maneuver, while also being easy to tow and fit in most garages. Choose from five attention-grabbing colors and numerous customization options.

COLOR OPTIONS: **NEW** Chili Pepper **NEW** Blueberry **NEW** Key Lime Vanilla Pineapple

[1] Based on BRP internal testing and information on manufacturer's websites.
[2] iBR and Convenience Package Plus optional with Rotax 900 HO ACE engine.

ADDITIONAL SPARK COLOR OPTION: VANILLA

ADDITIONAL SPARK COLOR OPTION: PINEAPPLE
(iBR and Convenience Package Plus shown.)

iBR (INTELLIGENT BRAKE AND REVERSE) SYSTEM – Stop your watercraft with the squeeze of a lever for more safety and effortless docking. iBR and Convenience Package Plus optional with the Rotax 900 HO ACE engine.

TOW PRO (OPTIONAL) – Three accessories in one: a tow pylon, spotter handle and equipment rack. Add more fun to pulling wakeboarders, wakeskaters and tubers thanks to a higher tow point. (Available on SPARK 3up.)

PICK AND FIT YOUR SPARK IN 5 SIMPLE STEPS

VISIT YOUR DEALER EARLY IN SEASON TO RESERVE YOUR SEA-DOO SPARK AND SELECT THE BEST CUSTOMIZATION OPTIONS FOR YOU.

SELECT THE NUMBER OF PASSENGERS

1

Sea-Doo SPARK 2up
Capacity: 2 persons / 350 lb (159 kg)

Sea-Doo SPARK 3up
Capacity: 3 persons / 450 lb (205 kg); an ideal capacity for 2 adults and 1 child

PICK YOUR ENGINE

2

Rotax 900 ACE[1] – The most fuel-efficient engine on the market[2] allows the Sea-Doo SPARK to reach a top speed of 40 mph (64 km/h).[3]

Rotax 900 HO ACE – A more powerful engine with better acceleration allows the Sea-Doo SPARK to reach close to 50 mph (80 km/h).[3]

ADD iBR AND CONVENIENCE PACKAGE PLUS[4]

3

Intelligent Brake and Reverse (iBR) – With our exclusive Intelligent Brake and Reverse (iBR) system you can stop sooner than other watercraft. Plus, get added maneuverability and simple docking.

Convenience Package Plus – Add great value with three of our most popular optional features. Get the Front Storage Bin Kit and bring along your personal belongings, make reboarding easier with the Sea-Doo Step and get the RF D.E.S.S. key that helps prevent unauthorized use and theft.

PICK YOUR COLOR

4

Choose from NEW Chili Pepper, NEW Blueberry, NEW Key Lime, Vanilla and Pineapple colorations and personalize your Sea-Doo SPARK watercraft to match your taste.

PERSONALIZE IT

5

Select fully integrated accessories and one of our large selection of Attitude Graphic Kits that will make your Sea-Doo SPARK unique to you. It's a unique customization nobody else offers.

[1] Featured exclusively on the Sea-Doo SPARK 2up without Intelligent Brake and Reverse (iBR) and Convenience Package Plus.
[2] Based on BRP internal testing and information on manufacturer's websites. [3] Based on BRP internal testing. Actual top speed may vary depending on loading and other conditions. [4] iBR and Convenience Package Plus is not available on the SPARK 2up with the Rotax 900 ACE engine.

SEA-DOO SPARK MOVE II TRAILER

CHILL SHADE

ATTITUDE GRAPHIC KITS

SEA-DOO STEP

SNAP-IN FENDERS & FRONT STORAGE BIN KIT

TOW PRO

RIDING GEAR ACCESSORIES GENUINE PARTS

MAKE EXCITEMENT PART OF YOUR COMPLETE LIFESTYLE.

Just because you want riding gear that will help you push the limits of excitement on your personal watercraft doesn't mean you can't make a personal statement about who you are when you're enjoying life away from the water. Own the best of both worlds with riding gear and accessories that were born to enhance your experience, and beachwear that says you're more than just a passenger on the ride of life. Embody excitement on and off the water with the complete Sea-Doo riding gear, parts and accessories line-up, coming to your local Sea-Doo dealer and online at store.sea-doo.com in January 2016.

LADIES' ESCAPE WETSUIT

BEACHWEAR

FRONT STORAGE TRAY & DRY BAG

ELEMENT RIDING JACKET AND PANTS

SNAP-IN FENDERS & SHORTY VEHICLE GLOVES
(Requires Snap-in Fenders Installation Kit.)

SEA-DOO SPARK 3UP COVER
SEA-DOO MOVE I I250 TRAILER

MAKE THE RIGHT CHOICE.

BRP's commitment to quality means that every watercraft is engineered to the highest industry leading standards. By using genuine BRP maintenance parts, you are taking care of your investment. There's an XPS product that cleans, others that lubricate or stabilize, some that cool and yet others that extend life. Some do only one, others more, but whatever they do they do exceptionally well. And they all provide complete peace of mind where it matters most. Out there.

AFTER ALL, YOU ONLY GET OUT WHAT YOU PUT IN... IF YOU'RE CHOOSING ANYTHING OTHER THAN XPS, YOU'RE NOT PUTTING INTO YOUR SEA-DOO WATERCRAFT WHAT YOU EXPECT TO GET OUT OF IT. THE ABSOLUTE BEST.

XPS. MORE THAN JUST OIL.

SPECIFICATIONS		PERFORMANCE				
		RXP-X 300	RXT-X 300	RXT-X aS 260	RXT 260	GTR 215
OVERVIEW	Available color(s)	Lava Red & Monolith Black Satin White & Dayglow Yellow	Lava Red & Monolith Black Satin White & Dayglow Yellow	Lava Red & Monolith Black Satin	Black & Sunburst Yellow	Black & Sunburst Yellow
	Rider capacity	2	3	3	3	3
	Weight capacity	400 lb. (182 kg)	600 lb. (272 kg)	500 lb. (227 kg)	600 lb. (272 kg)	600 lb. (272 kg)
DIMENSIONS	Length	130.6" (331.6 cm)	139.2" (353.5 cm)	139.2" (353.5 cm)	139.2" (353.5 cm)	132.6" (336.8 cm)
	Width	48.3" (122.7 cm)	48.2" (122.4 cm)	48.2" (122.4 cm)	48.2" (122.4 cm)	48.5" (123.1 cm)
	Height	45.2" (114.7 cm)	46.5" (118.1 cm)	46.5" (118.1 cm)	45.9" (116.6 cm)	44" (111.8 cm)
	Dry weight	850 lb. (386 kg)	914 lb. (415 kg)	1,028 lb. (466 kg)	894 lb. (406 kg)	799 lb. (363 kg)
	Fuel capacity	15.9 US gal (60 l)	15.9 US gal (60 l)	18.6 US gal (70 l)	15.9 US gal (60 l)	15.9 US gal (60 l)
PERFORMANCE & HANDLING	Rotax engine	1630 ACE	1630 ACE	1503 HO	1503 HO	1503 SCIC
	Fuel type: Minimum Recommended	87 octane 91 octane	87 octane 91 octane	87 octane 91 octane	87 octane 91 octane	87 octane 91 octane
	Hull type	T^3 Hull	S^3 Hull	S^3 Hull	S^3 Hull	GTI
	Variable Trim System (VTS)	High-performance (preset)	High-performance (preset)	High-performance (preset)	High-performance (preset)	High-performance (preset)
	Trim tabs	Fixed		Adjustable		
	Sponsons	Adjustable	Adjustable	Adjustable	√	√
CONVENIENCE	iTC - ECO mode	√	√	√	√	√
	iTC - Touring mode / Sport mode	√	√	√	√	√
	iTC - Ski mode		Optional	Optional	Optional	Optional
	iTC - Cruise control / Slow mode				√	
	Depth finder	Optional	Optional	Optional	Optional	Optional
	Altitude					
	Water temperature					
	Compass	√	√	√	√	√
	Time/distance to empty	√	√	√	Optional	Optional
	Speedometer	√	√	√	√	√
	Top/average speed / RPM / Lap timer	√	√	√	Optional	Optional
	Storage capacity	30.7 US gal (116.4 l) • Large front storage compartment • Glove box	42.8 US gal (162 l) • NEW Large front storage compartment • Watertight, removable storage bin • Glove box	16.6 US gal (63 l) • Watertight, removable storage bin • Glove box • Swim platform storage	42.8 US gal (162 l) • NEW Large front storage compartment • Watertight, removable storage bin • Glove box	30.8 US gal (116.6 l) • Large front storage compartment • Glove box
	Towing features	Tow hook	Ski tow eye	Ski tow eye	Ski tow eye	Tow hook
	Reboarding features	Optional Reboarding ladder	Optional Reboarding ladder	Optional Reboarding ladder	Reboarding ladder	Optional Reboarding ladder
	Removable board rack		Optional	Optional	Optional	Optional
	Handlebar with palm rest	√	√	√	√	√
	Mirrors	√	Adjustable	Adjustable	Adjustable	√
PEACE OF MIND & COMFORT	Brake, neutral and reverse	Electronic iBR	Electronic iBR	Electronic iBR	Electronic iBR	Electronic iBR
	Engine cooling (Closed-Loop Cooling System)	√	√	√	√	√
	Sea-Doo suspension			Adjustable Suspension (aS)		
	Seat	Ergolock with X coloration	Ergolock with X coloration	Ergolock with X coloration	Ergolock	Touring
	Tilt steering		√	√	√	
	X-Steering with A.E.S.	√	√	√		
	Off-Throttle Assisted Steering	√	√	√	√	√
	Programmable Learning Key	√	√	√	√	√
	RF D.E.S.S. (Digitally Encoded Security System) Key	√	√	√	√	√
	D-Sea-Bel sound reducing system	√	√	√	√	√
LIFESTYLE	Package	X-Racing Ergolock system	X-Racing Ergolock system	X-Racing Offshore		

For complete model specifications visit sea-doo.com

SPECIFICATIONS		LUXURY					TOW SPORTS	
		GTX Limited 300 model shown			*GTX S 155 model shown*			
		GTX Limited 300	GTX Limited 215	GTX Limited iS 260	GTX S 155	GTX 155	WAKE PRO 215	WAKE 155
OVERVIEW	Available color	Jet Black Metallic & Deep Pewter Satin		Jet Black Metallic & Deep Pewter Satin	Black & Deep Pewter Satin		White & Denim Blue Satin	White & Belize Blue
	Rider capacity	3		3	3		3	3
	Weight capacity	600 lb. (272 kg)		500 lb. (227 kg)	500 lb. (227 kg)	600 lb. (272 kg)	600 lb. (272 kg)	600 lb. (272 kg)
DIMENSIONS	Length	139.2" (353.5 cm)		139.2" (353.5 cm)	139.2" (353.5 cm)		139.2" (353.5 cm)	132.6" (336.8 cm)
	Width	48.2" (122.4 cm)		48.2" (122.4 cm)	48.2" (122.4 cm)		48.2" (122.4 cm)	48.5" (123.1 cm)
	Height	45.9" (116.6 cm)		43.9" (111.4 cm)	43.9" (111.4 cm)	45.9" (116.6 cm)	45.9" (116.6 cm)	44" (111.8 cm)
	Dry weight	909 lb. (412 kg)	894 lb. (406 kg)	1,038 lb. (471 kg)	1,018 lb. (462 kg)	879 lb. (399 kg)	894 lb. (406 kg)	799 lb. (363 kg)
	Fuel capacity	15.9 US gal (60 l)		18.6 US gal (70 l)	18.6 US gal (70 l)	15.9 US gal (60 l)	15.9 US gal (60 l)	15.9 US gal (60 l)
PERFORMANCE & HANDLING	Rotax engine	1630 ACE	1503 SCIC	1503 HO	1503 NA		1503 SCIC	1503 NA
	Fuel type: Minimum Recommended	87 octane 91 octane		87 octane 91 octane	87 octane		87 octane 91 octane	87 octane
	Hull type	S^3 Hull		S^3 Hull	S^3 Hull		S^3 Hull	GTI
	Variable Trim System (VTS)	High-performance (preset)		High-performance (preset)	Standard		High-performance (preset)	Standard
	Trim tabs							
	Sponsons	√		√	√		√	√
CONVENIENCE	iTC - ECO mode	√		√	√		√	√
	iTC - Touring mode / Sport mode	√		√	√		√	√
	iTC - Ski mode	Optional		Optional	Optional		√	√
	iTC - Cruise control / Slow mode	√		√	√		√	√
	Depth finder	√		√	Optional		Optional	Optional
	Altitude	√		√				
	Water temperature	√		√				
	Compass	√		√	√		√	√
	Time/distance to empty	√		√	Optional		Optional	Optional
	Speedometer	√		√	√		√	√
	Top/average speed / RPM / Lap timer	Optional		Optional	Optional		Optional	Optional
	Storage capacity	42.8 US gal (162 l) • NEW Large front storage compartment • Watertight, removable storage bin • Glove box		16.6 US gal (63 l) • Watertight, removable storage bin • Glove box • Swim platform storage	16.6 US gal (63 l) • Watertight, removable storage bin • Glove box • Swim platform storage	42.8 US gal (162 l) • NEW Large front storage compartment • Watertight, removable storage bin • Glove box	42.8 US gal (162 l) • NEW Large front storage compartment • Watertight, removable storage bin • Glove box	30.8 US gal (116.6 l) • Large front storage compartment • Glove box
	Towing features	Ski tow eye		Ski tow eye	Ski tow eye		3-position ski pylon	3-position ski pylon
	Reboarding features	Reboarding ladder		Reboarding ladder	Reboarding ladder		Reboarding ladder	Reboarding ladder
	Removable board rack	Optional		Optional	Optional		√	√
	Handlebar with palm rest	√		√	√		√	√
	Mirrors	Adjustable		Adjustable	Adjustable		Adjustable	√
PEACE OF MIND & COMFORT	Brake, neutral and reverse	Electronic iBR		Electronic iBR	Electronic iBR		Electronic iBR	Electronic iBR
	Engine cooling (Closed-Loop Cooling System)	√		√	√		√	√
	Sea-Doo suspension			Intelligent Suspension (iS)	Suspension (S)			
	Seat	Ergolock with stepped design		Ergolock with stepped design	Ergolock with stepped design		Ergolock	Standard
	Tilt steering	√		√	√		√	
	X-Steering with A.E.S.							
	Off-Throttle Assisted Steering	√		√	√		√	√
	Programmable Learning Key	√		√	√		√	√
	RF D.E.S.S. (Digitally Encoded Security System) Key	√		√	√		√	√
	D-Sea-Bel sound reducing system	√		√	√		√	√
LIFESTYLE	Package	Limited		Limited			WAKE	WAKE

For complete model specifications visit sea-doo.com

SPECIFICATIONS

		RECREATION					REC LITE	
			GTI SE 155 model shown		*GTI 130 model shown*		*SPARK 3up with iBR and Convenience Package Plus shown*	
		GTI Limited I55	GTI SE I55	GTI SE I30	GTI I30	GTS I30	SPARK 3up	SPARK 2up
OVERVIEW	Available color(s)	Jet Black Metallic & Deep Pewter Satin	Maldives Blue & White	Maldives Blue & White Black & White	White & Maldives Blue White & Manta Green	White & Orange Crush	Chili Pepper, Blueberry, Key Lime, Vanilla, Pineapple	
	Rider capacity	3	3		3		3	2
	Weight capacity	600 lb. (272 kg)	600 lb. (272 kg)		600 lb. (272 kg)		450 lb. (205 kg)	350 lb. (159 kg)
DIMENSIONS	Length	132.6" (336.8 cm)	132.6" (336.8 cm)		132.6" (336.8 cm)		120" (305 cm)	110" (279 cm)
	Width	48.5" (123.1 cm)	48.5" (123.1 cm)		48.5" (123.1 cm)		46" (118 cm)	
	Height	44" (111.8 cm)	44" (111.8 cm)		44" (111.8 cm)		41" (104 cm)	
	Dry weight	790 lb. (359 kg)	790 lb. (359 kg)		790 lb. (359 kg)	780 lb. (355 kg)	421 lb. (191 kg) iBR adds 13 lb. (6 kg)	405 lb. (184 kg) iBR adds 13 lb. (6 kg)
	Fuel capacity	15.9 US gal (60 l)	15.9 US gal (60 l)		15.9 US gal (60 l)		7.9 US gal (30 l)	
PERFORMANCE & HANDLING	Rotax engine	1503 NA	1503 NA	1503	1503		900 HO ACE	900 ACE or 900 HO ACE
	Fuel type: Minimum Recommended	87 octane	87 octane		87 octane		87 octane	
	Hull type	GTI	GTI		GTI		SPARK	
	Variable Trim System (VTS)	High-performance (preset)	Standard				Optional on models equipped with iBR	
	Trim tabs							
	Sponsons	√	√		√		√	
CONVENIENCE	iTC - ECO mode	√	√		√			
	iTC - Touring mode / Sport mode	√	√		√		(Sport mode: HO engine)	
	iTC - Ski mode	Optional	Optional		Optional			
	iTC - Cruise control / Slow mode	√						
	Depth finder	Optional	Optional		Optional		Optional	
	Altitude	√						
	Water temperature							
	Compass	√	√		√			
	Time/distance to empty	√	Optional		Optional			
	Speedometer	√	√		√		√	
	Top/average speed / RPM / Lap timer	Optional	Optional		Optional			
	Storage capacity	30.8 US gal (116.6 l) • Large front storage compartment • Glove box	30.8 US gal (116.6 l) • Large front storage compartment • Glove box		30.8 US gal (116.6 l) • Large front storage compartment • Glove box		0.42 US gal (1.6 l) glove box 7.42 US gal (28 l) with opt. Front Storage Bin Kit	
	Towing features	Ski tow eye	Tow hook		Tow hook		Tow hook	
	Reboarding features	Reboarding ladder	Reboarding ladder		Optional Reboarding ladder		Optional Sea-Doo Step	
	Removable board rack	Optional	Optional		Optional			
	Handlebar with palm rest	√	√		√		√	
	Mirrors	√	√		√			
PEACE OF MIND & COMFORT	Brake, neutral and reverse	Electronic iBR	Electronic iBR		Electronic iBR		Optional Manual Reverse or Optional electronic iBR (HO engine)	
	Engine cooling (Closed-Loop Cooling System)	√	√		√		√	
	Sea-Doo suspension							
	Seat	Touring	Touring		Standard		Slim	
	Tilt steering							
	X-Steering with A.E.S.							
	Off-Throttle Assisted Steering	√	√		√		√	
	Programmable Learning Key	√	√		√	√ (not programmable)	Optional (not programmable)	
	RF D.E.S.S. (Digitally Encoded Security System) Key	√	√		√		Optional	
	D-Sea-Bel sound reducing system	√	√		√		√	
LIFESTYLE	Package	Limited	SE				Optional iBR and Convenience Package Plus with Rotax 900 HO ACE engine	

For complete model specifications visit sea-doo.com

GET EVEN MORE WITH SEA-DOO ONLINE.

Visit our online tools to choose the right Sea-Doo model for you. Customize it online and learn everything you need to know, like how to find the nearest dealership, get current offers and discover events happening in your area. Follow us to stay up to date.

sea-doo.com
youtube.com/seadootv
facebook.com/sea-doo
brpseadoo
@BRPSeaDoo

©2015 Bombardier Recreational Products Inc. (BRP). All rights reserved. ™, ® and the BRP logo are trademarks of BRP or its affiliates. Products are distributed in the USA by BRP US Inc. †GTX is a registered trademark of Castrol Limited used under license. ®All other trademarks are the property of their respective owners. BRP reserves the right at any time to discontinue or change specifications, prices, designs, features, models or equipment without incurring obligation. Watercraft performance may vary depending on, among other things, general conditions, ambient temperature, and altitude, riding ability and rider/passenger weight. All product comparisons, industry and market claims refer to new sit down PWC with 4-stroke engines. Testing of competitive models done under identical conditions. Some models shown may depict optional accessories. Some pictures depicted in this brochure include professional riders and wakeboarders executing maneuvers under ideal and/or controlled conditions. Do not attempt any of these, or any other risky maneuvers, if they're beyond your level of riding or wakeboarding ability, as well as your understanding and respect for the performance of your personal watercraft. Always consult your PWC dealer when selecting a watercraft for your particular needs, and carefully read and pay attention to your Operator's Guide, Instructional Video, and the on-product labeling on your personal watercraft. Always drive responsibly and safely. Severe injury can result from ignoring warnings, not following the instructions or improper use of watercraft and related products. Use common sense and courtesy. Always observe applicable local laws and regulations. Respect the rights of, and keep a safe distance from, other recreationists and/or bystanders. Always wear the appropriate protective clothing, including a Coast Guard-approved P.F.D. as dictated by the circumstances including, but not limited to, the weather, boating conditions and age and abilities of the occupants. Don't operate your watercraft under the influence of drugs or alcohol. Always observe applicable laws and regulations.

Protect your watercraft with the B.E.S.T. Protection Plan out there! By being a member of these important industry associations, we recognize and support their efforts in sharing the responsibility of promoting the growth of our sport. Sea-Doo watercraft riders know that riding responsibly and safely is always more fun. Smart Sea-Doo riders wear appropriate protective clothing and never drink and ride. Always ride keeping a substantial distance between yourself and others. Every Sea-Doo watercraft comes with a safety/instructional video and an operator's guide as standard equipment.

THE WORLD IS OUR PLAYGROUND

Nothing is more valuable than your playtime. That is why BRP is dedicated to continually finding new and better ways to help you enjoy your favorite powersports. From snow to water to both on- and off-road fun, our passion for adventure fuels the innovations that result in the ultimate powersports experience for our customers. We value the land and water we play on and are committed to protecting it. Our desire to thrill is paired with an emphasis on rider responsibility, placing personal safety above all else. So that each outing can be the most enjoyable, memorable and thrilling experience possible. Because your free time should always be your best time.

www.brp.com

BRP

SKI-DOO® LYNX® SEA-DOO® EVINRUDE® ROTAX® CAN-AM®

Printed in Canada. P/N: 297002214

2016 RIDING GEAR, ACCESSORIES & GENUINE PARTS

SEA-DOO BRP

Introducing

2016 RIDING GEAR, ACCESSORIES & GENUINE PARTS

RIDING GEAR

4 Nylon PFDs
6 Neoprene PFDs
8 Ecoprene PFDs
10 PFD Chart
12 Riding Suit
14 Wetsuits
17 Kidswear
18 Rashguards & Riding Shorts
20 Gloves
21 Eyewear
22 Footwear
23 Bags
26 Beachwear
30 Sizing Chart

LEARN MORE AT A GLANCE

Look for these icons throughout the catalog to learn more about key products.

DID YOU KNOW
An interesting tidbit about an item beyond the product description.

INNOVATION
An item BRP pioneered that takes your ride to the next level.

VIDEOS
Check out the complete stories on sea-doo.com/videos and store.sea-doo.com

ACCESSORIES

32 Sea-Doo SPARK™ Accessories
37 Attitude Graphic Kits
42 Watersport Accessories
44 Docking/Safety Equipment
46 Storage
47 Custom Accessories
48 Covers
52 Sea-Doo Move Trailers
54 Sea-Doo Move Trailer Accessories
56 Electronics/Electrical

PARTS

57 Parts and Performance
62 XPS Oil and Maintenance

THE FUN LASTS LONGER WHEN SAFETY IS IN THE DRIVER'S SEAT

When you're the driver of a personal watercraft, you need to take the safety of your passengers personally.

As the "captain," you are not only responsible for adhering to the safety rules respecting personal watercraft use, but also for ensuring your passengers are wearing the appropriate protective equipment and riding gear.

First of all, you and your passengers are required to wear an approved personal flotation device (PFD) certified for use with a personal watercraft.

Also, a wetsuit and/or neoprene bottoms will provide adequate protection to the lower part of the body. You can suffer severe internal injuries if water is forced into a lower body cavity as a result of falling in the water or being near the jet thrust nozzle. Remember that normal swimwear cannot appropriately protect against forceful water entry.

Finally, extra protective equipment such as footwear, gloves and goggles is also recommended.

You can find all of these items at an authorized Sea-Doo dealer or online at store.sea-doo.com.

Products in this catalog will be available for purchase at your authorized Sea-Doo dealer and online at store.sea-doo.com starting January 2016. For advertising purposes, some scenes depicted in this catalog include professional riders and operators executing under ideal and/or controlled conditions. Do not attempt any of these or any other risky maneuvers if they're beyond your level of riding ability, as well as your understanding and respect for the performance of your Sea-Doo watercraft. RIDE SMART FROM THE START. Always ride responsibly and safely. Follow all instructional and safety materials, BRP recommends a minimum operator age of 16 years old for riding a watercraft. Always wear appropriate protective clothing for your type of boating use, including a Coast Guard approved personal flotation device. Always remember that riding and alcohol/drugs don't mix. Operate your watercraft keeping a safe distance between yourself and others. Always observe applicable local laws and regulations. Because of its ongoing commitment to product quality and innovation, Bombardier Recreational Products Inc. (BRP) reserves the right, at any time, to discontinue or change specifications, prices, designs, features, models or equipment without incurring any obligations. Some models depicted herein may include optional equipment. Prices are based on Manufacturer Suggested Retail Prices. Dealers may sell for a different price. For Canada & US. taxes are not included. Depending on location, products are distributed by BRP US Inc., Bombardier Recreational Products Inc., BRP European Distribution SA, BRP Australia Pty Ltd. or Bombardier Recreational Products Motores da Amazonia Ltda. ® are registered trademarks and ™ and the BRP logo are trademarks of Bombardier Recreational Products Inc. or its affiliates. ℠ is a trademark of Bombardier Inc. used under license. Velcro is a registered trademark of Velcro Industries. Clarino is a trademark of Kuraray Co. Ltd. Lycra is a trademark of E.I. DuPont de Nemours & Co. GTX is a registered trademark of Castrol Limited, used under license. 3M is a registered trademark of 3M Canada. YKK is a registered trademark of YKK Corporation. NGK is a registered trademark of NGK Spark Plugs, Ltd. YUASA is a registered trademark of YUASA Batteries Inc. Salt-Away is a trademark of Salt-Away Products. All other company and/or product names are trademarks of their respective holders. © 2015 BRP Inc. All rights reserved. Printed in Canada.

LIVE THE COMPLETE SEA-DOO EXPERIENCE ONLINE

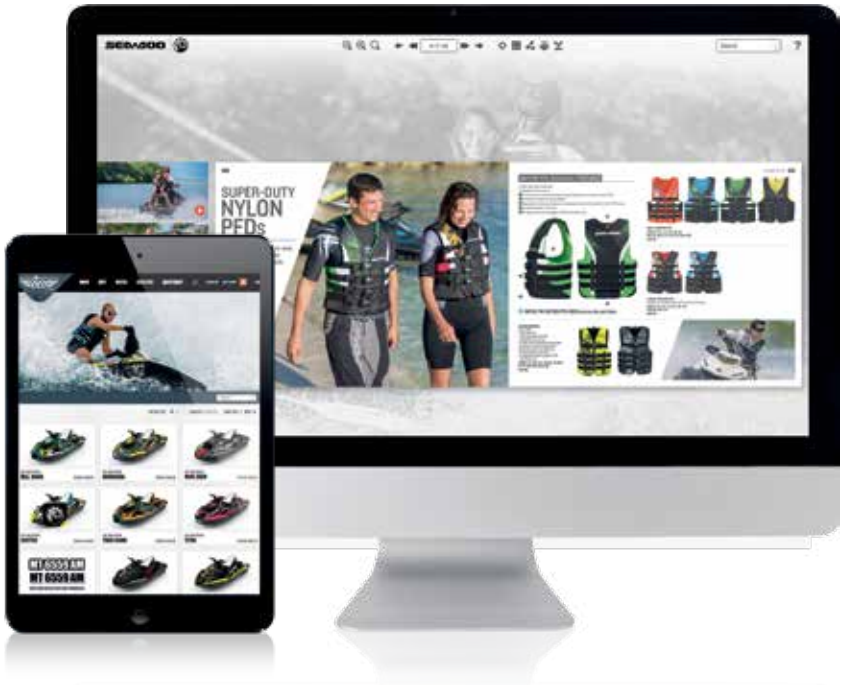

The 2016 Sea-Doo lineup will be available online to purchase in January 2016.

Shop the online store for parts, accessories and riding gear.

Sign up for Sea-Doo eNews and get free shipping* the next time you buy online.
*Valid with order of $150 and more.

Explore all our products in the interactive online catalog. Jump directly to products with the interactive table of contents, watch videos, large format images and share your favorite items via social media.

Get your XPS oils and maintenance products.

Check out our videos to learn more about our innovative riding gear and accessories at **www. sea-doo.com/videos** and **www. store.sea-doo.com**

Instantly view your dream Sea-Doo watercraft as you build it at **www. sea-doo.com/build**

Access the exclusive Attitude Graphic Kits at **www. scsseadoographics.com**

Download the free BRP Magazine app to access all BRP catalogs. Browse through the publication and enjoy add-ons like social media and annotation features, bookmarking and video streaming.

STORE.SEA-DOO.COM

SEA-DOO MAKES GOOD DAYS ON THE WATER GREAT DAYS.

Your Sea-Doo watercraft is the vehicle for taking you to new places not only physically but emotionally. You can visit places you've always dreamed of seeing and you can do it on your own terms. Oftentimes, the best memories are those that are unplanned. Being prepared for anything on the water can only make living the Sea-Doo life even more unforgettable.

We all picture bright, sunny skies when riding a Sea-Doo watercraft, yet you shouldn't have to schedule your fun around Mother Nature. Your Sea-Doo watercraft is versatile, capable of almost anything you can imagine and your gear collection should be just as versatile. No matter where you ride, when you ride, how you ride, and whom you ride with, do it your way, with your own style, and do it in maximum comfort.

Welcome to the 2016 Sea-Doo riding season, which starts now. Be the first on the water this spring with the right full coverage gear to be comfortable, taking the chill out of the air. Dress for the heat of mid summer with a mix of lighter gear and purpose built accessories. Extend your summer deep into fall with cool weather gear. Don't wait for the perfect day to have a perfect day.

You are the centerpiece of the Sea-Doo life as BRP takes a rider focused approach to your on-water experience. That is why BRP provides a host of Sea-Doo accessories that complement and enhance the experience. There is a Sea-Doo watercraft model for every type of rider, and a collection of riding gear and accessories to match it, no matter what Mother Nature decides to do that day. BRP's Sea-Doo Riding Gear, Parts, Accessories, and XPS maintenance products ensure your Sea-Doo life is as full and fun as possible, everyday of the year.

SEA-DOO ISN'T ONLY A BRAND, *it's a lifestyle.*

SUPER-DUTY NYLON PFDs

Built to last and made to wow. Enjoy light and versatile comfort, safety, and style.

MOTION PFD TECHNICAL FEATURES

- Super-duty nylon outer shell.
- Polyethylene foam inserts.

1. 4 woven straps with quick-release buckles (3 buckles on Canadian ladies' PFD).
2. Armholes cut large for riding comfort.
3. Segmented foam at back bottom for increased comfort while seated (on men's PFD only).
4. D-ring for lanyard connection.
5. D-ring at back neck for goggle-to-PFD attachment cord.

WATCH THE MOTION PFD VIDEO www.sea-doo.com/videos

MEN'S MOTION PFD

285876 • S, M, L, XL, 2XL, 3XL, 4XL
Red (30), Aqua (76), Green (70), Black (90)

$54.99

LADIES' MOTION PFD

285879 • XS, S, M, L, XL, 2XL, 3XL, 4XL
Pink (36), Aqua (76)

$54.99

NAVIGATOR PFD

- Unisex value-built PFD.
- Super-duty nylon outer shell, polyethylene foam inserts.
- 4 woven straps with quick-release buckles.
- Armholes cut large for riding comfort.
- Reinforced seams with vinyl piping.
- D-ring for lanyard connection.
- D-ring at back neck for goggle-to-PFD attachment cord.

285848 • XS, S/M, L/XL, 2XL/3XL, 4XL/6XL
Hi-Vis Yellow (26), Black (90)

$39.99

ULTRA-DURABLE NEOPRENE PFDs

Form-fitting flexibility
and performance that moves
with you and for you.

FREEDOM PFD TECHNICAL FEATURES

- Enhanced comfortable fit.
- Ultra-durable neoprene outer shell.
- Soft, beveled PVC and polyethylene foam inserts.

1. Segmentations at front and back for better comfort and ease of movement.
2. Side panels in stretch lining fabric for improved comfort.
3. 2 woven straps hidden at back with quick-release buckles.
4. Lumbar comfort zone inside the PFD.
5. Strategically-placed mesh drain panels.
6. Armholes cut large for riding comfort.
7. Heavy-duty front zipper.
8. D-ring for lanyard connection.
9. D-ring at back neck for goggle-to-PFD attachment cord.

LUMBAR COMFORT ZONE 4

Extra foam padding to minimize the pressure on your lower back while bolstering support.

MESH DRAIN 5

Mesh panels drain away excess water for quick drying and thermal regulated comfort.

The Freedom PFD's flexible neoprene construction makes it ideal for both riding your watercraft and doing tow sports.

WATCH THE FREEDOM PFD VIDEO www.sea-doo.com/videos

MEN'S FREEDOM PFD

285864 • S, M, L, XL, 2XL, 3XL
Yellow (10), Black (90)
$84.99

LADIES' FREEDOM PFD

285867 • S, M, L, XL, 2XL, 3XL
Black (90)
$84.99

FORCE PULLOVER PFD

- Ultra-durable neoprene outer shell and lining.
- Soft PVC foam inserts.
- Anatomical cut with large armholes and strategically-placed mesh drain panels for riding comfort.
- Heavy-duty side zipper and two woven straps with quick-release buckles for easy ingress/egress.
- D-ring for lanyard connection.
- D-ring at back neck for goggle-to-PFD attachment cord.

285819 • XS/S, M, L, XL, 2XL/3XL
Red (30)
$109.99

AIRFLOW-PLUS ECOPRENE PFDs

Ride the next wave with comfort, agility and great-looking sustainability.

AIRFLOW PFD TECHNICAL FEATURES

- Ecoprene outer shell and lining.
- Enhanced comfortable fit.
- Eco-friendly.

- Softer, lighter, more durable vest interior constructed of 100% PVC-free Biofoam.
- Made of GAIA foam that is lighter than conventional PVC foam, wet or dry, and the ecoprene shell is faster drying than neoprene.

1. Side panels in stretch lining fabric for improved comfort.
2. Armholes cut large for riding comfort.
3. 2 woven straps with quick-release buckles.
4. Heavy-duty front zipper.
5. Interior EVA molding that keeps the PFD surface away from the skin.
6. Lumbar comfort zone inside the PFD.
7. Strategically-placed mesh drain panels.
8. D-ring for lanyard connection.
9. D-ring at back neck for goggle-to-PFD attachment cord.

LADIES' BACK

LUMBAR COMFORT ZONE 6

Extra foam padding to minimize the pressure on your lower back while bolstering support.

MESH DRAIN 7

Mesh panels drain away excess water for quick drying and thermal regulated comfort.

WATCH THE AIRFLOW PFD VIDEO www.sea-doo.com/videos

MEN'S AIRFLOW PFD
285870 • S, M, L, XL, 2XL, 3XL
Black (90)
$119.99

LADIES' AIRFLOW PFD
285873 • S, M, L, XL, 2XL, 3XL
Black (90)
$119.99

WHICH PFD IS *the right one for you?*

MATERIAL

NYLON

A PFD that combines great value with high quality components that won't compromise look, safety, comfort and functionality.
Easy fitting so it can be shared by a wide range of people, and versatile so it can be used for a variety of water sports.
Your PFD needs to dry fast so it can be worn multiple times during the course of the day, making it perfect for the whole family.

FEATURES

- Dries faster than neoprene
- Lightweight
- Low water absorption
- Affordable and best value
- Perfect for sharing

RECOMMENDED OPTIONS

KIDS' SANDSEA	JR. MOTION	NAVIGATOR	MOTION
$29.99	$39.99	$39.99	$54.99
285839	285861	285848	Men's • 285876 Ladies' • 285879
Hi-Vis Yellow (26)	Aqua (76)	Hi-Vis Yellow (26), Black (90)	Men's • Red (30), Green (70), Aqua (76), Black (90) Ladies' • Pink (36), Aqua (76)
S (0-30 lb), M (30-50 lb), L (50-90 lb)	L (50-90 lb)	XS, S/M, L/XL, 2XL/3XL, 4XL/6XL	Men's • S, M, L, XL, 2XL, 3XL, 4XL Ladies' • XS, S, M, L, XL, 2XL, 3XL, 4XL

NEOPRENE

A personal, “athletic” PFD just for you, that matches your active riding style, can handle rugged daily — and all-day — use and adds warmth when needed. Snug fitting to intuitively shadow your body’s movements, and roomy where it counts not to hinder your mobility, your PFD will allow you to express yourself on the water.

Fitted

Warm against the skin

Increased level of comfort

Ease of movement

JR. FREEWAVE	FREEDOM	FORCE PULLOVER
$59.99	$84.99	$109.99
285828	Men’s • 285864 Ladies’ • 285867	285819
Black with graphics (94)	Men’s • Yellow (10), Black (90) Ladies’ • Black (90)	Red (30)
L (50-90 lb)	S, M, L, XL, 2XL, 3XL	XS/S, M, L, XL, 2XL/3XL

ECOPRENE

The ultimate PFD that blends the functional attributes of nylon and performance features of neoprene, and also makes you feel environmentally green when surrounded by blue. PVC-free and sustainable. Your PFD will feel light even when wet and maximize air flow, because the more comfortable you are, the better and longer you will ride.

ALL THE ADVANTAGES OF NEOPRENE PLUS

Dries as quick as nylon

Low water absorption

Added ventilation

30% lighter than neoprene when wet

AIRFLOW
$119.99
Men’s • 285870 Ladies’ • 285873
Black (90)
S, M, L, XL, 2XL, 3XL

RIDING SUIT

A versatile riding suit that suits you on and off the water. For those times when anything less isn't quite enough.

Don't let the wind or the cold disturb you and your perfect day on the water. Stay warm and functional whatever the weather with these new Element Riding Jacket and Pants.

ELEMENT JACKET AND PANTS TECHNICAL FEATURES

- Windproof light jacket and pants perfect for chilly days.
- Looks cool while riding or when going to a restaurant.
- Laminated membrane offers water resistance and breathability.
- Teflon† water-repellent treatment.
- Brushed-knit polyester thermal fleece that offers additional warmth.
- Stretch fabric for ease of movement.
- 100% polyester.
- Jacket and pants are sold separately.

ELEMENT JACKET

- Fit to be worn under the PFD.
- Slim fit to keep snug against the wind and keep warmth inside.

1. 2 exterior pockets.
2. 1 interior pocket.
3. Soft mesh inside for additional comfort.
4. Hook-and-loop tab at wrist for adjustment.
5. Water repellent treatment.

WATCH THE ELEMENT RIDING SUIT VIDEO
www.sea-doo.com/videos

ELEMENT PANTS

- Relaxed fit to allow wearing boardshorts underneath.

6. Elastic waistband with adjustment buckle.
7. 2 exterior zippered pockets.
8. Pre-shaped legs designed for multiple riding positions.
9. Side zipper leg at bottom to snug the ankle while riding, then simply open for a more casual look.
10. Ankle gaiter inside to prevent the wind from coming in and to keep warmth inside.

MEN'S ELEMENT RIDING JACKET

440682
S, M, L, XL, 2XL, 3XL
Black (90)
$129.99

MEN'S ELEMENT RIDING PANTS

441572
S, M, L, XL, 2XL, 3XL
Black (90)
$99.99

LADIES' ELEMENT RIDING JACKET

440687
XS, S, M, L, XL, 2XL
Black (90)
$129.99

LADIES' ELEMENT RIDING PANTS

441565
XS, S, M, L, XL, 2XL
Black (90)
$99.99

WETSUITS

Keeping you warm and comfortable
no matter where the ride takes you.

ESCAPE WETSUIT TECHNICAL FEATURES

- Short wetsuit made of 2 mm neoprene and 4-way stretch fabric at underarm, sleeves, lumbar, crotch and collar for more flexibility.

1. New front upper zip entry with drain holes.
2. Ergonomical shaped mock neck collar and back bottom legs.
3. Raw edge sleeves, legs and collar openings for comfort.

This watercraft-specific wetsuit features a front entry and zipper that facilitate closing the suit.

MEN'S ESCAPE WETSUIT

286590 • S, M, L, XL, 2XL, 3XL
Black (90)
$119.99

LADIES' ESCAPE WETSUIT

286591 • 6, 8, 10, 12, 14
Black (90)
$119.99

WATCH THE ESCAPE WETSUIT VIDEO
www.sea-doo.com/videos

MEN'S X-TEAM NEOPRENE RIDING JACKET

- Versatile 2 mm neoprene jacket.
- Can be worn over a PFD or independently.
- Articulated inner elbow for easy bending.
- Slit at back waist for comfortable seating.
- 2-way front zipper.
- 2 front pockets.
- Plush lined hood.

286435 • M, L, XL, 2XL
Red (30)
$144.99

The X-Team Neoprene Riding Jacket can be worn over your PFD, providing greater comfort during inclement weather riding.

WATCH THE X-TEAM NEOPRENE RIDING JACKET VIDEO
www.sea-doo.com/videos

HAVASU WETSUIT

- Sleeveless 3/2 mm neoprene wetsuit.
- Built using stretch neoprene under the arms, side panels and on calves.
- Articulated back of knees for easy, unrestricted movements.
- Velcro† shoulder closure for easy changing.
- Textured knee pads for better grip with seat.

MEN'S HAVASU WETSUIT

286597 • S, M, L, XL, 2XL
Black (90)
$139.99

LADIES' HAVASU WETSUIT

286626 • 6, 8, 10, 12, 14
Matte Black (93)
$139.99

HAVASU JACKET

- Lightweight 1 mm neoprene jacket.
- Use with the Havasu Wetsuit or separately.
- Relaxed fit.
- Pre-shaped sleeves.

MEN'S HAVASU JACKET

- Sleeve openings and raw edge collar.

286598 • S, M, L, XL, 2XL
Black (90)
$109.99

LADIES' HAVASU JACKET

- Front pockets with plastic snaps.
- Underarm ventilation.
- Reflective prints on the shaped sleeves.

286625 • XS, S, M, L, XL, 2XL
Matte Black (93)
$109.99

KIDSWEAR

The made-for-kids toughness and protection you insist on, dressed up in the fun they crave.

My day on the water

KIDS' SANDSEA PFD

- Built to take the all-day treatment a kid can deliver.
- Constructed with a super-duty nylon outer shell and polyethylene foam inserts.
- 3 woven straps with quick-release buckles (2 buckles on Small size).
- Armholes cut large for comfort.

285839 • S (0-30 lb), M (30-50 lb), L (50-90 lb)
Hi-Vis Yellow (26)
$29.99

S (0-30 lb)

M (30-50 lb)

L (50-90 lb)

JR. FREEWAVE PFD

- Ultra-durable neoprene outer shell and lining.
- Combination of PVC and polyethylene foam inserts.
- 2 woven straps with quick-release buckles.
- Strategically-placed mesh drain panels.
- Armholes cut large for comfort.
- Heavy-duty front zipper.
- Split tail comfort design.

285828 • L (50-90 lb)
Black with graphics (94)
$59.99

JR. MOTION PFD

- Super-duty nylon outer shell.
- Polyethylene foam inserts.
- 3 woven straps with quick-release buckles.
- Armholes cut large for comfort.

285861 • L (50-90 lb)
Aqua (76)
$39.99

YOUTH RASHGUARD

- Lightweight, cool protection for even the hottest days.
- SPF 50 UV sun protection from the 5 ½ oz. (156 g) polyester/spandex quick drying materials.
- Mock turtleneck collar design.
- Boardshort connector.

286495 • 6, 8, 10, 12, 14
Green (70)
$24.99

YOUTH SANDSEA SPRINGSUIT

- Shorty wetsuit.
- Constructed of 2 mm neoprene with lumbar stretch panels for more flexibility.
- Smoothskin collar with adjustable Velcro for better comfort.
- Back zipper.

286499 • 8, 10, 12, 14
Black with graphics (94)
$54.99

RASHGUARDS & RIDING SHORTS

Essentials for complete comfort and protection.
Wave, after wave, after wave...

BOARDSHIRT TECHNICAL FEATURES

LOOSE FIT

- SPF 50 UV sun protection from the 5½ oz. (156 g) polyester/spandex quick drying materials.

1. Mock turtleneck collar design.
2. Underarm, center back and collar mesh fabric* for good ventilation on long sleeves version.
3. Underarm mesh fabric* on short sleeves version.

*Mesh fabric made of lightweight bamboo fiber that delivers cool protection on even the hottest days.

WATCH THE LONG SLEEVES TECHNICAL BOARDSHIRT VIDEO
www.sea-doo.com/videos

MEN'S SS TECHNICAL BOARDSHIRT
286494 • S, M, L, XL, 2XL, 3XL
White (01)
$34.99

MEN'S LS TECHNICAL BOARDSHIRT
286496 • S, M, L, XL, 2XL, 3XL
White (01)
$44.99

VIBE RASHGUARD

FITTED

- Mock turtleneck collar design.
- SPF 50 UV protection.
- Boardshort connector.
- 6 oz (170g) nylon/spandex.

MEN'S VIBE SS RASHGUARD

286418 • S, M, L, XL, 2XL, 3XL
Grey (09), Orange (12)
$34.99

MEN'S VIBE LS RASHGUARD

286419 • S, M, L, XL, 2XL, 3XL
Grey (09), Orange (12)
$44.99

LADIES' VIBE SS RASHGUARD*

286420 • XS, S, M, L, XL, 2XL
Grey (09), Pink (36)
$34.99

LADIES' VIBE LS RASHGUARD*

286421 • XS, S, M, L, XL, 2XL
Grey (09), Pink (36)
$44.99

*Available while supplies last.

COVE TECHNICAL BOARDSHORTS*

- Constructed of ultra light, quick drying fabric that stretches 4 ways.
- Removable lightweight stretch neoprene inner shorts with drawstring closure.
- Design features include tie closure and reinforced crotch seams.
- Side pocket with hidden Velcro closure and elastic loop under flap for key.

91% Polyester, 9% Spandex

453751 • 28, 30, 32, 34, 36, 38, 40, 42
Mixed Color (18)
$79.99

*Available while supplies last.

These technical boardshorts include neoprene inner shorts to protect riders from water intrusion.

WATCH THE TECHNICAL BOARDSHORTS VIDEO
www.sea-doo.com/videos

MEN'S NEOPRENE SHORTS

- Made with 2 mm neoprene.
- Elastic waist with drawstring closure.

286442 • S, M, L, XL, 2XL, 3XL
Black (90)
$54.99

LADIES' NEOPRENE SHORTS

- Made with 2 mm neoprene.
- Reinforced crotch stitching.
- Elastic waist with drawstring closure.

286443 • S, M, L, XL
Black (90)
$39.99

RIDE IN STYLE

Wear any of our boardshorts on rides and still enjoy maximum protection from water intrusion, simply by slipping on a pair of neoprene shorts underneath.

GLOVES

Get a grip on durability and comfort that can handle all-day fun.

ATTITUDE GLOVES

- Polyester gloves with spandex and mesh panels for ventilation, plus double stitching in high stress areas for durability.
- Clarino† Nash palm material and rubberized Pro Grip on thumb and palm to ensure a solid hold.
- Adjustable Velcro wrist straps.

49% Polyester, 45% Clarino Nash, 5% Spandex, 1% PVC

ATTITUDE FULL-FINGER GLOVES*

286354 • XS, S, M, L, XL, 2XL, 3XL • Yellow (10), Orange (12), Black (90)

$36.99

*Available while supplies last.

ATTITUDE SHORTY GLOVES*

- Rubberized Pro Grip material on the thumb and palm, providing maximum grip when wet or dry.
- Webbed hands to make glove removal easy.

286355 • XS, S, M, L, XL, 2XL, 3XL • Yellow (10), Orange (12), Black (90)

$29.99

*Available while supplies last.

VEHICLE GLOVES

- Gloves designed specifically for watercrafting.
- Features mesh on top, spandex and adjustable Velcro wrist straps.
- Mesh panels for ventillation plus double stitching in high stress areas for durability.
- Clarino Nash palm material with holes and rubberized Pro Grip to ensure a solid hold.

45% Clarino Nash, 45% Polyester, 5% Neoprene, 5% Grip Material

FULL-FINGER VEHICLE GLOVES

286450 • XS, S, M, L, XL, 2XL, 3XL • Black (90)

$36.99

Feature touchscreen technology on index fingers and thumbs that allows operation of smart device screens.

SHORTY VEHICLE GLOVES*

- Webbed hands to make glove removal easy.

286449 • XS, S, M, L, XL, 2XL, 3XL • Black (90)

$29.99

*Available while supplies last.

EYEWEAR

Light gets in, water stays out.
Fun should always be that easy.

SEA-DOO AMPHIBIOUS RIDING GOGGLES

- Super strong and lightweight goggles that float on the water.
- Aerodynamic design uses soft flexible frame that mold to the shape of any face while offering 100% UV protection.
- The suspended, anti-fog lenses are polarized and interchangeable.
- Package includes goggle-to-PFD attachment cord, hard case and pouch that doubles as cleaning cloth.

447723 • One size
Black with graphics (94)
$74.99

Air passing around sunglasses dries your lenses when riding – goggles keep your eyes protected.

AMPHIBIOUS GOGGLES POLARIZED REPLACEMENT LENS

447791 • One size
Grey (09), Amber (95)
$19.99

AMPHIBIOUS GOGGLES CLEAR REPLACEMENT LENS

447792 • One size
Clear (00)
$19.99

SEA-DOO RIDING GOGGLES

- Specially designed for watercraft applications to deliver the best eye protection available.
- Feature revolutionary patented hypoallergenic silicone seal offering the finest anti-fog solution.
- Mirrored, scratch-resistant lenses and adjustable band.
- Package includes goggle-to-PFD attachment cord, branded storage hard case and pouch that doubles as cleaning cloth.

447462 • One size
White (01), Yellow (10), Orange (12), Black (90)
$74.99

FOOTWEAR

Comfort, protection and style for beach, aboard and beyond.

SEA-DOO SANDALS

- Fashionable sandals with lightweight and comfortable design.
- Rubber insert insole for anti-slip performance.
- Molded feet area.

444188 • 7, 8, 9, 10, 11, 12
Black (90)
$29.99

SEA-DOO RIDING BOOTS TECHNICAL FEATURES

1. High cut neoprene boot for added comfort, grip and protection.
2. Neoprene interior adds comfort and protection, while the mesh flow-through panels allow water to drain quickly.
3. Naturally shaped, molded sole with arch support provides maximum comfort and grip.
4. Fast and easy quick-lace system includes lace storage pocket.
5. Adjustable Velcro strap for a better fit at the ankle.

WATCH THE SEA-DOO RIDING BOOTS VIDEO
www.sea-doo.com/videos

SEA-DOO RIDING BOOTS

285807 • 6, 7, 8, 9, 10, 11, 12
Black (90)
$99.99

These boots not only protect and support your feet and ankles, but provide more grip in aggressive riding.

BAGS

Made to carry everything your lifestyle wants to bring along.

SEA-DOO CARRIER DRY BACKPACK BY OGIO TECHNICAL FEATURES

1. Quick-access front zippered stash pocket.
2. Organization panel with 2 zippered pockets inside. Laptop and tablet sleeves.
3. Removable high visibility liner.
4. Dual-density shoulder straps.
5. 2-way adjustable sternum strap.
6. 360-degree reflective screen print.
7. Airflow back panel keeps the rider cool.
8. Off-center removable hip belt.

LINER

BACK

SEA-DOO CARRIER DRY BACKPACK BY OGIO

- Completely waterproof rolltop design.
- Strap containment system ensures all straps are secured at high speeds.
- Constructed of 420-denier nylon for durability.
- 20.5" H (rolled) x 10.5" W x 6.75" D (52 cm x 27 cm x 17 cm).
- 1600 cu in/26L capacity.

469562 • One size
Black (90)
$139.99

WATCH THE SEA-DOO CARRIER DRY BACKPACK BY OGIO VIDEO
www.sea-doo.com/videos

SEA-DOO DUFFLE BAG

- Specially designed for day trips or extended outings.
- Made of durable polyester with segmented mesh inner pocket and key hook.
- Bag features two special compartments: one is waterproof for wet items, the other is a cooler.
- Comes with carry strap and shoulder protector.
- Measures 24" x 12" x 12" (60 cm x 30 cm x 30 cm).

447731 • One size
Charcoal Grey (07)
$59.99

Side pocket cooler

Waterproof compartment

Mesh inner pocket

SEA-DOO DRY POUCH

- 1-liter volume splash-proof protection for your small essentials.
- Made of lightweight material with a see-through TPU window and drybag style roll-down top with clips.
- Belt hook for easy carrying.

Note: Not intended for immersion service.

469540 • One size
Yellow (10)
$17.99

GEAR *stories*

If you are living the water breather lifestyle, dress the part. The right gear will ensure you comfort and style while being protected.

Fun session

Function is as crucial as having your own style. The Technical Boardshorts and Neoprene Shorts will give you both.

Day ride

Get down to the essentials of a Sea-Doo wetsuit to make the most of your day on the water.

Weekend cruise

Grand Touring while wearing the Element Riding Jacket and Pants means not having to plan your riding according to Mother Nature.

BEACHWEAR

Make every moment look
as good as you feel.

CREW TEE

- Relaxed t-shirt with round neck.
- Chest pocket.

100% Cotton

286605
S, M, L, XL, 2XL, 3XL
Heather Grey (27), Black (90)

$29.99

SPARK TEE

- Fitted V-neck t-shirt.

100% Cotton

286603
S, M, L, XL, 2XL, 3XL
White (01), Blue (80)

$34.99

MISTRAL TEE

- Relaxed t-shirt with round neck.

100% Cotton

286608
S, M, L, XL, 2XL, 3XL
Charcoal Grey (07), Red (30)

$29.99

CHILL HOODIE*

- Pullover zippered hoodie with 2-zippered pocket.
- Sleeve cuff with hole for thumb.
- Pre-washed garment for better handfeel.

78% Cotton, 17% Polyester, 5% Spandex

286357 • M, L, XL
Charcoal Grey (07), Blue (80)
Heather Grey (27), Navy (89)

$74.99

*Available while supplies last.

The Classic Polo is constructed of fibers that actively promote evaporation for cooling at the marina, office or golf course.

WAVE CAP

- Flat peak with mesh at back.
- Foam front panel.
- Snap at back.

100% Polyester

286607 • One size
White (01), Heather Grey (27)
$24.99

SEA-DOO CLASSIC CAP

- Lightweight adjustable cap that's perfect for summer use.
- Metal adjuster at back.

100% Cotton

286595 • One size
White (01), Charcoal Grey (07)
$19.99

PULSE BOARDSHORTS*

- Technical boardshorts with advanced 4-way stretch fabric that is ultra light and dries quickly.
- Function well in water when combined with neoprene shorts for riding and look great out.
- Tie waist closure and reinforced crotch seams.
- 3 front pockets.

88% Polyester, 12% Spandex

286353 • 28, 30, 32, 34, 36, 38, 40
Grey (09), Orange (12), Red (30), Black (90)
$59.99

Features an integrated waterproof pouch located inside the zippered pocket.

*Available while supplies last.

COVE TECHNICAL BOARDSHORTS*

- Functional in the water, fashionable out.
- Technical boardshorts with advanced 4-way stretch fabric that is ultra light and dries quickly.
- Removable lightweight stretch neoprene inner shorts with drawstring closure.
- Design features include tie closure and reinforced crotch seams.
- Side pocket with hidden Velcro closure and elastic loop under flap for key.

91% Polyester, 9% Spandex

453751 • 28, 30, 32, 34, 36, 38, 40, 42
Mixed Color (18)
$79.99

*Available while supplies last.

SEA-DOO CLASSIC SHORTS

- 4-way stretch fabric that is ultra light and dries quickly.
- Function well in water when combined with neoprene shorts for riding and look great out.
- 4 pockets.

88% Polyester, 12% Spandex

286596 • 28, 30, 32, 34, 36, 38, 40, 42
Black (90)
$59.99

SEA-DOO CLASSIC POLO

- Mini-R† yarn reflects the sun's rays to keep you cool.
- 100 UPF UV protection.
- Wicking fabric.
- Hidden front snap placket.

66% Interlock, 34% PES Mini-R

286592 • S, M, L, XL, 2XL, 3XL
White (01)
$44.99

SPLASH BIKINI TOP*

- Sport bikini top that offers good support with quick-dry foam in cup.
- Hook adjustment at center back and on left side under mesh buckle.

57% Nylon, 31% Polyester, 12% Spandex

286359 • XS, S, M, L, XL, 2XL
Pink (36), Black (90), Teal (74)

$49.99

*Available while supplies last.

PULSE BOARDSHORTS*

- Advanced 4-way stretch fabric that is ultra light and dries quickly.
- Function well in water when combined with neoprene shorts for riding and look great out.
- Feature mesh lining and snap waist closure.
- 2 pockets.
- Waterproof pouch is included to keep small items dry.

88% Polyester, 12% Spandex

286356 • 4, 6, 8, 10, 12, 14
White (01), Black (90), Navy (89)

$49.99

*Available while supplies last.

BREEZE DRESS*

- Summer dress with frill accents around neckline and arms.
- Mesh insert on back yoke for comfort.

81% Cotton, 12% Spandex, 7% Nylon

286358 • XS, S, M, L, XL, 2XL
Charcoal Grey (07), Pink (36), Teal (74)

$29.99

*Available while supplies last.

SEA-DOO SIGNATURE TEE

- Fitted V-neck t-shirt made of stretchable fabric.
- Gathered sides seams to highlight feminine shape.

95% Cotton, 5% Spandex

286593 • XS, S, M, L, XL, 2XL
White (01)

$34.99

SIZING CHART

Size up for the perfect ride.

BE SURE TO MEASURE YOURSELF TO FIND THE RIGHT SIZE.

HOW TO MEASURE
For best results, have someone else take measurements. Measure body in swimsuit or undergarments. Tape must be snug but not tight. If measurements fall between two sizes, order the larger size.

HEIGHT
Stand with back straight, without shoes; measure from the top of the head to the floor.

CHEST
Measure under your arms, around the fullest part of your chest.

WAIST
Measure around your natural waistline, keeping one finger between the tape and body.

HIPS
Stand with legs together, measure around the fullest part of your hips, ensuring the tape is level.

ARM LENGTH
Let your arm hang down on the side in a slightly bent position. Measure from the center of the back of your neck, along the length of your arm, to the wrist.

INSEAM
Without shoes, from crotch to the floor.

PFDs

MEN'S MOTION

Size	S	M	L	XL	2XL	3XL	4XL
Chest (in)	33-37	37-41	41-45	45-49	49-53	53-57	57-61

NAVIGATOR

Size	XS	S/M	L/XL	2XL/3XL	4XL/6XL
Chest (in)	28-32	32-40	40-52	50-60	61-66

FORCE PULLOVER

Size	XS/S	M	L	XL	2XL/3XL
Chest (in)	34-36	37-39	39-41	41-43	44-47

MEN'S FREEDOM & AIRFLOW

Size	S	M	L	XL	2XL	3XL
Chest (in)	33-37	37-41	41-45	45-49	49-53	53-57

LADIES' MOTION

Size	XS	S	M	L	XL	2XL	3XL	4XL
Chest (in)	28-32	32-36	36-40	40-44	45-49	49-53	53-57	57-61

LADIES' FREEDOM & AIRFLOW

Size	S	M	L	XL	2XL	3XL
Chest (in)	30-33	33-37	37-41	41-45	45-49	49-53

KIDS' SANDSEA

Size	S	M	L
Weight	0-30 lb	30-50 lb	50-90 lb

JR. FREEWAVE & JR. MOTION

Size	YOUTH (L)
Weight	50-90 lb

WETSUITS

MEN'S

Size	S	M	L	XL	2XL	3XL
Height	5'6"-5'8"	5'8"-5'11"	5'11"-6'2"	6'-6'3"	6'-6'4"	6'-6'4"
Weight (lb)	130-150	150-175	175-200	195-220	215-235	235-255

LADIES'

Size	6	8	10	12	14
Height	5'2"-5'4"	5'4"-5'7"	5'6"-5'9"	5'7"-5'10"	5'8"-5'10"
Weight (lb)	110-115	120-130	130-140	140-150	150-160

YOUTH

Size	8	10	12	14
Height	4'6"-4'8"	4'8"-4'10"	4'10"-5'	5'-5'3"
Weight (lb)	60	70	80	90

GLOVES

Measure palm width

Size	XS	S	M	L	XL	2XL	3XL
Inches	3	3 ¼	3 ½	4	4 ½	5	5 ½

FOOTWEAR

Measure foot length

Size	6	7	8	9	10	11	12
Foot length (in)	9.3	9.7	10	10.2	10.6	11.0	11.3

RIDING SUIT / RASHGUARDS / BEACHWEAR

MEN'S

Size	XS		S		M		L		XL		2XL	3XL
Boardshorts		**28**		**30**	**32**	**34**	**36**	**38**	**40**	**42**		
Chest (in)	33-35	35-36	36-37	37-38	38-40	40-41	41-43	43-45	45-47	47-49	49-52	52-56
Waist (in)	27-29	29-30	30-31	31-32	32-34	34-35	35-37	37-39	39-41	41-43	43-46	46-50
Low Hips (Seat) (in)	33-35	35-36	36-37	37-38	38-40	40-41	41-43	43-45	45-47	47-49	49-52	52-56
Arm Length (in)	30	30	31	31	32	32	33	33	34	34	35	35
Inseam	31	32	32	32	32	32	32	32	32	32	32	32

LADIES'

Size	XS	S	M	L	XL	2XL
Boardshorts	**4**	**6**	**8**	**10**	**12**	**14**
Chest (in)	32-34	34-36	36-38	38-40	40-42	42-45	45-49
Waist (in)	24-26	26-28	28-30	30-32	32-34	34-37	37-41
Low Hips (Seat) (in)	34-36	36-38	38-40	40-42	42-44	44-47	47-51
Arm Length (in)	31	31	32	32	32	33	33
Inseam	30	30	30	30	30	30	30

YOUTH

Size	6	8	10	12	14
Chest (in)	25	27	28 ½	30	31 ½
Low Hips (Seat) (in)	25	27	28 ½	30	31 ½

WHAT CODE REPRESENTS YOUR SIZE?

1. Find your size. 2. The corresponding code is THE CODE you use to complete the part number on your order. Example: 440227_90 Size: M = Code "06", therefore 4402270690

Size	ONE SIZE	XS	S	M	L	XL	2XL	3XL	4XL	XS/S	S/M	L/XL	2XL/3XL	4XL/6XL
Code	00	02	04	06	09	12	14	16	18	90	72	73	74	75

Size	4	6	7	8	9	10	11	12	14	28	30	32	34	36	38	40	42
Code	23	25	27	28	29	30	31	32	34	36	37	38	39	40	41	42	43

#SPARK *some fun*

Every Spark article of riding gear, part or accessory originates from the same gene that triggers unbridled fun. It's the science of wow fused with the coolness of you to deliver the total watersport lifestyle.

SEA-DOO SPARK ACCESSORIES

The most customizable watercraft on the market lets your true colors shine, with fully integrated accessories that are all about personality – yours.

The Tow Pro delivers the leverage and high-powered hull stability you need to turn your 90 hp Sea-Doo SPARK into a tow sport personal watercraft.

The higher tow point makes it easier for wakeboarders and skaters to jump and get air, while the spotter handle promotes better directional stability. Equipped for stowing your board when not in use, and with a special latch to hang the ski rope between rides.

TOW PRO

- Three accessories in one – a tow pylon, spotter handle and equipment rack.
- Add more fun to pulling wakeboarders, wakeskaters and tubers thanks to higher tow point.
- Give the spotter more confidence with ergonomic grab handles.
- Carry your board out to clear water.
- Even includes a strap for conveniently stowing your tow rope.

Sea-Doo SPARK 3up

295100605

$339.99

WATCH THE TOW PRO VIDEO
www.sea-doo.com/videos

SEA-DOO STEP

- Convenient step with knee-friendly surface for deep water boarding.
- Installs easily on the right side of a Sea-Doo SPARK watercraft and can hold up to 250 lb (113 kg).
- The Sea-Doo Step easily mounts on the transom and can be installed by any authorized Sea-Doo dealer in minutes.

Sea-Doo SPARK

295100642

$94.99

The Sea-Doo Step makes it easy to reboard from deep water after taking a swim or following a wake session.

WATCH THE SEA-DOO STEP VIDEO
www.sea-doo.com/videos

VARIABLE TRIM SYSTEM

- Activates and provides instantaneous VTS adjustment.
- Switch mounted on handlebar allows fine tuning of watercraft trim angle while riding.
- Simple plug-in connection.
- Includes switch, cap and hardware necessary for installation.

Sea-Doo SPARK with iBR*™

295100630

$209.99

*Intelligent Brake and Reverse (iBR)

The Variable Trim System provides preset positions for quick settings when adjusting boat trim, while maximizing acceleration and high-speed stability. When you trim up, you'll have a drier ride, which helps when towing. When you trim down, you can ride more aggressively while staying glued to the water.

Ahead of the curve on the market in terms of innovative protection from dock damage, these Snap-in Fenders effortlessly lock in and out of the pre-molded holes on the bumper.

SNAP-IN FENDERS

- Protect your investment with easy to install and remove fenders designed specifically for Sea-Doo watercraft.
- Pre-molded holes front and rear on the Sea-Doo SPARK models ensure a solid mount in the optimal spot.
- The Snap-in Fenders float and the high visibility orange color keeps them in sight.
- Requires Snap-in Fenders Installation Kit (295100550) to install on models other than Sea-Doo SPARK.
- Sold in pairs.
- Patent pending.

All PWCs
295100418
$94.99

WATCH THE SNAP-IN FENDERS VIDEO
www.sea-doo.com/videos

CARGO NET

- With a 4L (1.05 US gallon) capacity, this cargo net keeps regularly used items in place.
- The mesh material allows water to drain out easily and air to circulate, perfect to stow your Snap-in Fenders, tow ropes or diving mask.
- An elastic cord allows you quick access, while keeping your items secured.

Sea-Doo SPARK
295100559
$39.99

SEA-DOO SPEED TIE

- Fully-integrated watercraft mooring system, providing the ultimate in convenient, quick and secure docking.
- Snap-out plates front and rear on Sea-Doo SPARK models allow easy installation and positioning of the Sea-Doo Speed Tie system.
- Stores 7' (2.1 m) of rope and locks to desired length.
- Sold in pairs.

Sea-Doo SPARK
295100496
$199.99

The Sea-Doo Speed Tie makes docking easier than ever with seven feet of retractable dock lines at the helm and on the transom that effortlessly stow out of sight. The Speed Tie system is a must-have accessory that frees up storage space and ensures you have a dock line at all times.

FRONT DEFLECTOR LID KIT

- Made of polypropylene, this deflector directs water away from the driver's feet and legs on colder days, but removes quickly when temperature heats up.

Sea-Doo SPARK

295100553

$84.99

FRONT STORAGE BIN KIT

- Soft-sided design matches the contours of the Sea-Doo SPARK model to maximize storage.
- Polyurethane construction protects items from rough waves and those spirited rides.
- Drain holes at bottom.
- Lid is included.
- Maximum storage capacity: 28 L (7.4 US gallons).

Sea-Doo SPARK

295100504

$139.99

WATCH THE FRONT STORAGE BIN KIT VIDEO
www.sea-doo.com/videos

GRIP MAT

- This EVA foam material grip mat ensures both comfort and traction.
- Easy to install with the double sided tape attached to the mat.

Sea-Doo SPARK

295100556

$109.99

GRIP MAT EXTENSION

- This EVA foam material grip mat ensures both comfort and traction.
- Allows you to reboard to a cushioned platform while protecting it from wear and tear.
- Easy to install with the double sided tape attached to the mat.
- For full protection on a 3up, add the Grip Mat (295100556).

Sea-Doo SPARK 3up

295100571

$49.99

SIDE PROTECTOR

- This 6-piece rubber formed protector is specifically designed for the Sea-Doo SPARK.
- Its curves and angles follow the lines of the watercraft to enhance the look while protecting it from small impacts and wear.
- Allows installation of the Snap-in Fenders and maintenance with no problem.

Sea-Doo SPARK

295100575

$139.99

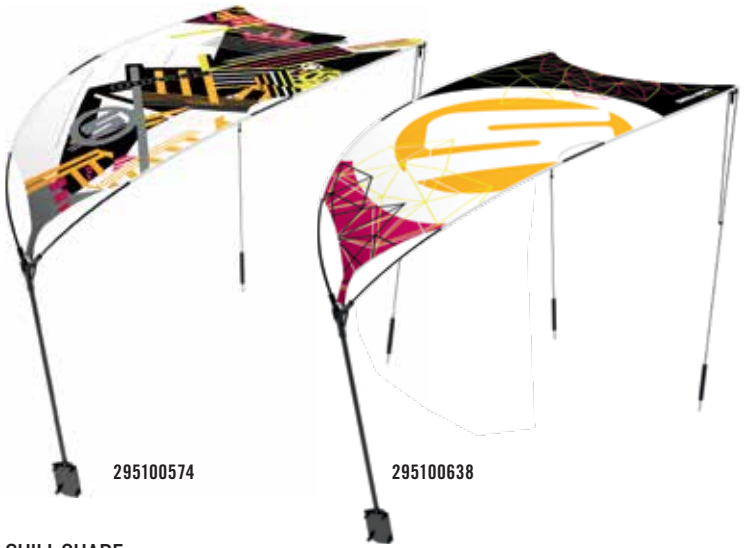

295100574 295100638

The Chill Shade is a versatile sun shade that was engineered to be mounted on the Sea-Doo SPARK while anchored or easily removed for setup on the beach, providing shade on the sunniest days.

CHILL SHADE

- Don't go looking for shade - bring it with you.
- The innovative Chill Shade provides versatile protection both on the water and at the beach.
- Can be used at speeds up to 35 mph (56 km/h) when properly set.
- Can be easily installed while out on the water and stores conveniently.
- Made of colorful netting, it comes with 2 integrated pouches to be used as sand anchors on the beach.

Sea-Doo SPARK	Sea-Doo SPARK
295100574	295100638
$139.99	$139.99

WATCH THE CHILL SHADE VIDEO www.sea-doo.com/videos

SEA-DOO SPARK PANEL KIT

- Colored panel kit that allows you to change your vehicle color.
- Kit includes: 3 panels, Sea-Doo SPARK decals, BRP logo and required hardware.

Sea-Doo SPARK

- 295100613 • Bubble Gum
- 295100614 • Licorice
- 295100615 • Orange Crush
- 295100617 • Pineapple
- 295100616 • Vanilla
- 295100627 • Blueberry
- 295100628 • Key Lime
- 295100674 • Chili Pepper

$409.99

295100674

EXCLUSIVE ATTITUDE GRAPHIC KITS

These Sea-Doo exclusive Attitude Graphic Kits are the product of choice for avid Sea-Doo SPARK riders. Whether you want to make your watercraft stand out from the crowd or give it a facelift, this is the product for you. Customizing kits also available for more color logo options. The digital print designs will not fade in sunlight and the vehicle wraps are designed to bond to "hard-to-stick" surfaces as well as low energy surfaces.

SCS offers custom registration numbers that can be ordered as an integral part of your Attitude Graphic Kits, or they can be customized and manufactured separately.

3 LEVELS OF CUSTOMIZATION

LIGHT - LEVEL I

MEDIUM - LEVEL 2

FULL - LEVEL 3

MORE THAN 20 DIFFERENT GRAPHIC KITS AVAILABLE IN 3 LEVELS OF CUSTOMIZATION AND COLOR OPTIONS FOR A WIDE RANGE OF COMBINATIONS

BERMUDA

SPINNER

DAUNTLESS

LOW DOWN

STARFISH

RAZDAZ

If you want your Sea-Doo SPARK to be as unique as your signature, visit www.scsseadoographics.com to see our full lineup of graphic kits.

Produit Autorisé
Licensed Product

MANUAL REVERSE KIT

- This kit can be easily added to your Sea-Doo SPARK and will aid immensely in docking maneuvers and trailer loading.
- A lever located on the left side makes it easy to engage reverse and avoid the need for aggressive or dangerous maneuvers.

Sea-Doo SPARK without iBR

295100596

$299.99

WEAR RING

(Not illustrated)

- Simple cost effective way to keep the pump system operating like new.
- Precision machined for peak performance and durability.
- Fits with just the right amount of clearance from impeller.
- Made of resistant stainless steel to withstand damage from debris and saltwater corrosion.

Sea-Doo SPARK 2up and 3up

295100649

$199.99

RF D.E.S.S.™ KEY

- Digitally Encoded Security System Key's ball-and-socket design ensures a solid connection, even in very active riding.
- A radio frequency chip inside the key communicates with the vehicle wirelessly.
- Only when the key code matches the vehicle will the Sea-Doo SPARK start – giving you peace of mind.

Sea-Doo SPARK with iBR

295100639

$209.99

Sea-Doo SPARK without iBR

295100629

$209.99

The key provides radio frequency automotive grade anti-theft technology for the marine world.

LEARNING KEY LANYARD

- Reduces the speed of your watercraft and allows less experienced riders to learn gradually.

Sea-Doo SPARK (2016)

278003093

$54.99

FLUSH KIT

- A must to help keep your engine corrosion-free and to maximize performance.
- Kit includes all necessary components for a hassle-free flush.

Sea-Doo SPARK Standard on 2015 and up models

295100555

$34.99

DEPTH FINDER

- Displays the water depth below the hull.
- Plug-and-play connection.
- Requires Electric Connection Kit (295100599).

Sea-Doo SPARK

295100590

$309.99

ELECTRIC CONNECTION KIT

(Not illustrated)

- A very convenient and safe way to add electrical accessories.
- Installs plug-and-play style to the Sea-Doo SPARK wiring harness with an easy installation.
- The Electrical Connection Kit allows you to add 2 electrical accessories.
- Required in order to install the Sea-Doo SPARK Depth Finder (295100590).

Sea-Doo SPARK

295100599

$94.99

12-VOLT OUTLET AND INSTALLATION KIT

- Use this 12V outlet to charge your phone or GPS unit.
- Equipped with waterproof cover to prevent water infiltration.

Sea-Doo SPARK, GTI, GTS, GTR, WAKE 155, RXP-X

295100577

$49.99

BILGE PUMP KIT

- Keeps engine compartment dry.
- Includes 460 gph bilge pump, stainless steel mounting bracket, bilge fitting, hose and hardware necessary for installation.

Sea-Doo SPARK

295100497

$129.99

SEA-DOO SPARK MOVE II TRAILER

- A trailer made specifically for your Sea-Doo SPARK watercraft.
- Weighing 30% less than other Move II models and 25% shorter, the Sea-Doo SPARK Move II Trailer totally redefines traveling light.
- You can actually tow it with most standard cars since it's under 1,500 lb even when loaded with two Sea-Doo SPARK PWCs.
- It comes pre-calibrated, so you're good to go, from the get-go.

WITH LEAF SPRING SUSPENSION

Overall length	12' 5"	Overall height (fenders)	24"	Approx. weight	340 lb
Overall width	8' 4"	Overall height (winch)	34"	Carrying capacity	1220 lb
Width between fenders	7' 1"	Coupler	2.0"	Tire size	4.80" x 12"

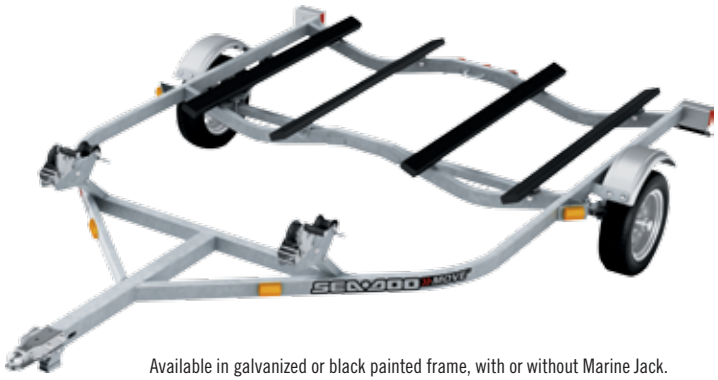

Available in galvanized or black painted frame, with or without Marine Jack.

The Sea-Doo SPARK Move II trailer is so well designed, it can be towed by most compact car even loaded with two Sea-Doo SPARK PWC.

SEA-DOO SPARK COVERS

- Strapless design allows easy installation.
- Solution-dyed fabric for increased UV resistance.
- Features include patented air release vent system for trailering and interior pouch to store cover when not in use.
- Openings to accommodate the Speed Tie system and Snap-in Fenders while docked, plus one at the back for hook under the seat.

Easy access to the gas cap and storage box without removing the full cover.

Sea-Doo SPARK 2up	Sea-Doo SPARK 3up
295100671	295100672
$199.99	$219.99

BUILD YOUR OWN SEA-DOO

Select fully integrated accessories that will make your Sea-Doo watercraft unique to you and instantly view it as you build it.

1. Chill Shade **P.36**
2. Tow Pro **P.33**
3. Sea-Doo Speed Tie **P.34**
4. Grip Mat **P.35**
5. Grip Mat Extension **P.35**
6. Sea-Doo Step **P.33**
7. Side Protector **P.35**
8. Snap-in Fenders **P.34**
9. Front Storage Bin Kit **P.35**
10. Attitude Graphic Kit - Razdaz (Level 3) **P.37**

www.sea-doo.com/build

Customize YOUR SEA-DOO WATERCRAFT WITH FULLY INTEGRATED ACCESSORIES

With a Sea-Doo watercraft model available for every type of ride and rider, the ability to customize your experience and fun has been perfected by BRP. Sea-Doo accessories are never an afterthought. All Sea-Doo accessories are developed at the same time as the product to ensure complete integration and to provide customization options to truly make the watercraft your own.

Sea-Doo watercrafts are world renowned for their innovation in providing the rider a better on-water experience as the BRP design and innovation teams are the masters behind the science of fun. Each accessory is developed to deliver absolute functionality and elements of personalization. Everybody's idea of the perfect Sea-Doo life is a little different, and mixing and matching authentic Sea-Doo accessories helps ensure you have the things that make your time more fun.

There is a range of Sea-Doo accessories to complement everybody's experience. The wake sports fanatic can add the Retractable Ski Pylon to select models while the SPARK owner can stand out with a custom Attitude Graphic Kit. The offshore rider can store his phone, keys or wallet in the Glove Box Organizer and ensure his watercraft is secure at the dock with a Sea-Doo Speed Tie. The GTI rider can organize his gear in the removable Storage Tray, and the GTX touring riders can protect their watercraft while moored with Snap-in Fenders.

Retractable Ski Pylon

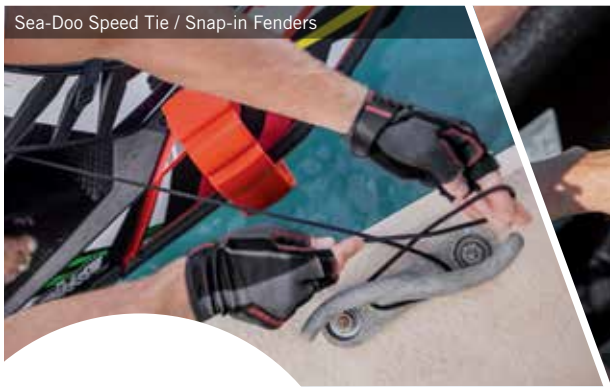
Sea-Doo Speed Tie / Snap-in Fenders

Glove Box Organizer Kit

These and the many more Sea-Doo accessories provide you options on how to outfit your Sea-Doo life in a unique way.

Attitude Graphic Kit

SEA-DOO ACCESSORIES

Fully accessorizing to elevate your riding experience is the difference between owning a Sea-Doo watercraft and making it your own.

RETRACTABLE SKI PYLON

- High-rise pylon keeps rope out of water for better watersport fun.
- Features built-in spotter grab handles and retracts out of the way when not in use.

RXT-X, GTX, RXT (except models with iS), GTI & GTS (2011 and up), GTR (2012 and up), GTX Limited (2014 and up)

295100457

$369.99

WATCH THE RETRACTABLE SKI PYLON VIDEO
www.sea-doo.com/videos

WAKEBOARD RACK

- Each rack holds one wakeboard while offering safe and easy board storage.
- Sold individually.

GTX with iS, RXT, RXT-X & WAKE Pro (2010 and up), GTI & GTS (2011 and up), GTR (2012 and up), GTX Limited (2014 and up)

295100453

$169.99

WATCH THE WAKEBOARD RACK VIDEO
www.sea-doo.com/videos

SHOCK TUBE

- Protects passengers from ski rope kick-back and keeps it away from impellers.
- Durable nylon covered closed-cell foam.

295100662 • White
295100663 • Yellow

$19.99

SKI TOW EYE

- Replaces existing U-ring for easy towing of skiers and tubes.

GTX, GTS, GTI, RXT, GTR & RXP-X (2012)

291002351

$29.99

The Sea-Doo Speed Tie makes docking easier than ever with seven feet of retractable dock line, at the helm and on the transom, that effortlessly stows out of site.

SEA-DOO SPEED TIE

- Fully-integrated watercraft mooring system, providing the ultimate in convenient, quick and secure docking.
- The Speed Tie system is a must-have accessory that frees up storage space and ensures you have a dock line at all time.
- Stores 7' (2.1 m) of rope and locks to desired length.
- Standard equipment on the GTX Limited iS.
- Sold in pairs.

RXP-X (2012 and up)

295100466

$229.99

GTR (2012 and up), GTI, GTI SE & GTS (2011 and up), GTX without suspension (2010 and up), WAKE Pro, WAKE 155, RXT & RXT-X without suspension (2010 and up)

295100422

$199.99

GTX iS & RXT iS (2009 and up), RXT-X aS (2011 and up), GTX-S 155 with suspension (2012)

296000249

$199.99

SEA-DOO SPEED TIE FOR DOCK

- Same exclusive mooring system available as a PWC accessory, adapted for dock mounting.
- Provides quick and secure mooring for all watercraft, eliminating excessive rope on deck.
- Bolts directly to dock.
- Stores 7' (2.1 m) of rope and locks to desired length.
- Sold individually.

295100336

$119.99

SNAP-IN FENDERS

- Protect your investment with easy to install and remove fenders designed specifically for Sea-Doo watercraft.
- High visibility orange color keeps them in sight.
- Sold in pairs.
- Requires Snap-in Fenders Installation Kit (295100550) to install on models other than Sea-Doo SPARK.
- Patent pending.

295100418

$94.99

Ahead of the curve on the market in terms of innovative protection from dock damage, these Snap-in Fenders effortlessly lock in and out of the pre-molded holes on the bumper.

Snap-in Fenders float and can fit any Sea-Doo.

SNAP-IN FENDERS INSTALLATION KIT

(Not illustrated)

Lets you enjoy the fastest, easiest way to install protective fenders on your watercraft.

PWC with iBR (including GTS), not required for Sea-Doo SPARK models

295100550

$19.99

SANDBAG ANCHOR

- Made of 600-denier solution-dyed yellow polyester fabric capable of holding an estimated 45 lb (12.5 L) of wet sand.
- Measures 15 ¾'' x 9'' (40 cm x 22.9 cm).
- 16' half-inch nylon strap (4.9 m x 1.3 cm).
- Plastic hook attachment and molded floater.

295100661 • Yellow

$29.99

ANCHOR*

- High performance Richter† anchor.
- Provides superior grip and easy retrieval.
- Holds all watercrafts up to 22' (7 m) in length.

295100289

$89.99

*Available while supplies last.

LEARNING KEY LANYARD

- Reduces the speed of your watercraft and allows less experienced riders to learn gradually.

DI & 4-TEC models (2014 and prior)

278002203

$54.99

D.E.S.S. FLOATING SAFETY LANYARD

Replacement D.E.S.S. lanyard.

Models 2014 and prior

278002199

$54.99

ANCHOR

- 11 lb (5 kg) Fluke-style anchor with slip ring provides sure grip.

295100046

$59.99

TUBE TOW ROPE*

- 50' (15.2 m) heavy-duty tow rope.

All 3-seater PWCs

295100207

$43.99

*Available while supplies last.

FENDER

- Polyform strength and dependability with a vinyl valve system for quick, flexible adjustment of firmness.
- One fender and one rope per package.
- Fender ties included.

295100372

$29.99

THROW LINE BAG

- Floating storage bag and 50' (15 m) of buoyant yellow rope.
- Throw line bags provide added safety.

295500832

$29.99

DOCK TIE

- Moor your watercraft with this floating Sea-Doo shock cushioned nylon rope.
- Provides security to keep your watercraft and dock attached.
- One per package.

295100047

$29.99

FIRE EXTINGUISHER

- A requirement for any watercraft.
- Ideal for grease, oil and electrical fires.
- US Coast Guard approved.

295100056 • White
295100004 • Red

$24.99

SAFETY EQUIPMENT KIT

- This kit includes all the essentials for your watercraft.
- 50' (15 m) of buoyant heaving line, bailer, whistle and watertight flashlight.

295100330

$19.99

WHISTLE

- "Pea-less" whistle.
- Produces an extremely loud, high, penetrating sound that can be heard over long distances.
- Unaffected by water; just clear with one quick blow.

295500554

$8.99

THE PERFECT CARRY-ALL FOR CARRYING ON WORRY-FREE

Although no one expects your beach towel to be wrinkle-free, aiming for dry is something we can all agree on. That is why quality storage is important on a Sea-Doo watercraft. Adding a fitted Glove Box Organizer, Storage Tray, or Dry Bag will make your life easier and keep your items safer and dry when on the water.

10 L

25 L

DRY BAG

- Watertight bag.
- Puncture-resistant PVC coated polyester fiber material.
- Reinforced bottom.
- Offered in 10 L or 25 L capacity.

269502121 • Black • 10 L (2.6 US gallons)

$29.99

- Includes a shoulder strap. 420-deniers resistant polyester with TPU coating.

269001936 • Black • 25 L (6.6 US gallons)

$49.99

GLOVE BOX ORGANIZER KIT

- Kit includes glove box liner and semi-rigid splash-resistant portable case.
- Liner cushions the inside of the glove box to provide insulation.
- Case fits perfectly in the glove box and is easily accessible when opening the glove box cover.
- This semi-rigid case is perfect for carrying and storing valuables, e.g. keys, cell phone, wallet, sunglasses.

Models on S³Hull™, all iS models

295100327

$124.99

FRONT STORAGE TRAY

- Optimizes storage space.
- 12 L (3.2 US gallons) capacity.

RXP-X (2012 and up), GTI & GTS (2011 and up), GTR (2012 and up), WAKE 155

295100583

$154.99

STORAGE TRAY

- Complete with molded compartments for convenient storage of your watercraft safety kit, cooler and watertight foam insulated otter box.
- Netting provides secure storage for towels, clothing and sandals.
- Comes with a practical integrated carry handle.

GTX & RXT (2009 and prior), except models with iS

269501478

$69.99

REGISTRATION KIT

- High quality UV-resistant registration kit.
- Easy to install without deformation, with a glue that will adhere to all surfaces, including Sea-Doo SPARK.
- Available in two contrasting colors that meet mandatory regulations for height and size.

All PWCs models

3" (7.6 cm)

295100570 • Black
295100578 • Light Grey

$29.99

4" (10.2 cm)

Meets international laws.

295100631 • Black

$34.99

BLANK SHEET FOR STICKERS

(Not illustrated)

- Apply this self-adhesive sheet on your vehicle so you can add your own regional or other personalized stickers.

295100654 • White

$20.99

LADDER

- Retractable boarding step designed specifically for your watercraft.
- Spring-loaded to stay in the up position.

All models (2006 and up), except Sea-Doo SPARK

295100552

$239.99

HANDLEGRIPS KIT

- Better control and comfort using dual density rubber design.
- Fits all 2000 and up watercraft.

Sold in pairs

295500976 • Blue / Black
295500977 • Earth Grey / Black
295500978 • Green / Black

$17.49

Sold in pairs

295500979 • Red / Black
295500980 • Pewter Grey / Black
295500981 • Yellow / Black

$17.49

Sold individually (Not illustrated)

277001336 • Slate Grey

$14.99

COVERS

A storage cover is essential to ensure your Sea-Doo watercraft is protected from the elements and to maintain a fresh appearance. There's a perfectly fitted cover for every model in the line.

Sea-Doo covers use a patented vent system to stay snug while trailering.

COVERS

Complete and versatile lineup of watercraft covers.
Solution-dyed fabric offers easy handling and increased UV resistance.
Strapless design provides easy installation.
Patented air release vent system for trailering.

FITS	COLORS	SKU	PRICE
RXT iS 260 (2009 and up), GTX iS 215 (2010 and up), GTX Limited iS 260 (2009 and up)	Black / Light Grey	280000460	$249.99
GTX 155/215, RXT-X 260, Int'l RXT-X 260 & RXT 260 (2010 and up), models without suspension, GTX Limited 215 (2014)	Black / Light Grey	280000472	$249.99
GTX-S 155 (2012 and up)	Black / Light Grey	280000587	$249.99
WAKE Pro 215 (2010 and up)	Black	280000664	$249.99
GTR 215 (2012 and up)	Black / Light Grey	280000596	$249.99
RXP-X 260 (2012 and up)	Black / Light Grey	280000543	$249.99
WAKE 155 (2011 and up)	Black	280000665	$249.99
GTI 130 (2011 and up), GTI SE 130 / 155 (2011 and up), GTS Rental (2011 and up), GTS (2011 and up)	Black / Light Grey	280000598	$249.99
RXP & RXP-X (2004-2011)	Black / Mortar Grey	280000464	$249.99
RXT-X aS	Black / Light Grey	280000586	$259.99
SPARK 2up	Black	295100671	$199.99
SPARK 3up	Black	295100672	$219.99

*Convenient openings for easy access to the Speed Tie mooring system.
Note: For prior model years, please ask your dealer for details.

280000460*, 280000472*, 280000587*

280000664

280000596, 280000543

280000665

280000598

280000464*

295100671

295100672

PWC COVER HOOK REPLACEMENT

(Not illustrated)
- Replacement sew-in attachment hook.
- Hook under watercraft bumper.

All PWCs

295100407

$6.99

Journey TO NEW DESTINATIONS

TORONTO Canada

Toronto is as diverse a city as you will find anywhere in North America. Diverse in the people, the cultures, the land, and the activities enjoyed, including the ways one can enjoy a Sea-Doo watercraft. With over 2.6 million people, Canada's most populated city, and Ontario's capital, is certain to have a few people who share the same passions and this is why TorontoPWC.com was formed.

Two friends who love the Sea-Doo Life set out to organize a watercraft community where people who are new to riding in the Toronto area can meet others with similar interests and learn about the diverse riding opportunities Lake Ontario provides. Group rides are common as all participants share their experiences as they teach and learn while exploring the interesting sights of this great lake city.

Toronto is a boating mecca and is perhaps better enjoyed by Sea-Doo as access to unique waterside points of interest are more accessible by watercraft. Rides venture from Toronto's inner harbor to the shallows where old shipwrecks can be explored up close and picnics can be enjoyed in the shadows of the cliffs at Bluffs Park Beach. Experienced riders can challenge the currents of the Niagara River after a run across the west end of the lake or enjoy a wake session in one of the coves near Scarborough.
Now matter what your riding interest the Toronto PWC community is there to join you.

FOR MORE INFORMATION
Toronto Riding / www.torontopwc.com

NASHVILLE Tennessee

Known as the music city, Nashville offers a variety of watercraft riding experiences to turn up the volume on fun. With a major river winding around the city and two lakes with-in 20-minutes of downtown, the riding options are as plentiful as the live bands on Broadway Street on a Saturday night.

Nashville is no longer a sleepy country music depot but a budding hip city with plenty to do on land and water. Old Hickory Lake is a manmade reservoir residing on the upper east side of the city that feeds into the Cumberland River and hosts numerous marinas and waterside restaurants. Recreational boaters can access the river through the Old Hickory Lock that will lower boats roughly 65' before the massive gates open to the Cumberland.

From the dam, the river meanders 18.5 km (11.5 mile) through the Tennessee hills to downtown and beyond, eventually teeing into the Ohio River. Along the way there is plenty of natural scenery, historic houses and a chance of passing the General Jackson, the 1000 passenger, paddle-driven showboat that calls Nashville home. If you prefer the tranquility of tree lain shorelines take a ride on Percy Priest Lake, another man-made reservoir that is managed by the Army Corp of Engineers where no houses of businesses touch the lake providing a very personal experience on the water.

Go to Nashville soon and you will experience the renaissance of Nashville at its peak, but visit it before everybody finds out about this secret treasure.

Riding a Sea-Doo watercraft provides you a freedom you can only experience by being on the water. Places you may have seen many times before become different and new as the view from behind the handlebars provides a completely different perspective. We share four unique destinations and provide insight on how to explore a new side of each from the water riding a Sea-Doo watercraft.

Some of the best riding experiences are those that aren't common but developed by true enthusiasts. Croatia may not be the first place in Europe you may think of as a hotbed for epic Sea-Doo experiences but with 5835 km (3625 miles) of coastline on the Mediterranean Sea there are plenty of new experiences around every island. Riders can experience the water on their own or if they prefer to try a designed ride there is the Trophée Des Îles in Croatia – an unforgettable adventure by GPS.

Croatian Sea-Doo riders know a bit about covering calculated distances as the reigning world record holder for greatest distance travelled on a watercraft in a 24-hour period is Croatian Ivan Otulic, who rode his Sea-Doo GTX Limited iS 260 1,641.43 km (1,019.94 miles) in 2009. The Trophée Des Îles also offers a calculated ride, although in a much more relaxed manner. On this ride the fun isn't squeezed into 24 hours but spread over multiple days with a new adventure coming with every sunrise.

The ride covers 200 km (125-miles) in the Dalmatia region between the beautiful islands of Krk, Cres, Rab, and others. Tour riders explore the breathtaking scenery in this part of Croatia with a different stage every day and are welcomed every afternoon to luxury accommodations in a seafront hotel. These types of rides will certainly provide memories of a lifetime.

FOR MORE INFORMATION
Trophée Des Îles / traveladventures@brp.com

TROPHÉE DES ÎLES *Croatia*

ANGRA DOS REIS *Brazil*

For those looking for an island getaway, the Angra dos Reis area of Brazil has an island for everyday of the year as it includes 365 offshore islands in this tropical territory located on the southern part of Rio do Janeiro state. The surroundings of Angra dos Reis are deal for Sea-Doo touring, as they are quiet, calm waters among the beautiful islands and beaches yet close enough to civilization to feel completely secure. This is not to say you can't enjoy this experience with others.

The local BRP dealers organize numerous rides during the year such as a multiple day ride during the Corpus Christi holiday (June 4-7) in which they lead a ride of 60+ Sea-Doo riders. The group is based at a four-star waterfront hotel in Mangaratiba that provides easy access to the water and includes delicious meals, live music and marina services. The ride includes a tour of places such as Heaven Bag, Blue Lagoon and Dentist Beach in Big Island, Island of boots, Caras Island and Frade Beach.

Such rides in Brazil have become tradition as personal watercraft riding is anything but personal and is enjoyed together by families and all lovers of watersports. These group rides exemplify the Sea-Doo life that includes incredible on-water experiences that are also enjoyed on land with others sharing the same passions. The Angra Dos Reis waters offer something for everybody and enough islands to experience something new every ride.

FOR MORE INFORMATION
Angra Dos Reis Corpus Christi Ride
GP Mini dealership in Belo Horizonte (MG)
gpminiveiculos.com.br/empresa/

SEA-DOO MOVE TRAILERS

- Fully adjustable carpeted bunks (side-to-side/front-to-back) allow you to change bunk angles to fit all watercraft.
- Custom frame design requires less water to load and unload watercraft.
- Sealed maintenance-free wheel bearings for added peace of mind.
- All models are available in galvanized frame for extended life in all weather conditions or in a painted black version, with or without Marine Jack.

WATCH THE SEA-DOO MOVE TRAILERS VIDEO
www.sea-doo.com/videos

SEA-DOO MOVE I 1250

The single trailer recommended to carry your Sea-Doo SPARK.

WITH TORSION SUSPENSION OR WITH LEAF SPRING SUSPENSION
AVAILABLE WITH OR WITHOUT MARINE JACK

Overall length	12’ 5”	Coupler	2.0”
Overall width	4’ 10”	Approx. weight	231 lb
Width between fenders	3’ 9”	Carrying capacity	1,235 lb
Overall height (fenders)	24”	Tire size	4.80” x 12”
Overall height (winch)	31.5”		

Galvanized

Painted Black

SEA-DOO MOVE I EXTENDED 1250

WITH LEAF SPRING SUSPENSION
AVAILABLE WITH OR WITHOUT MARINE JACK

Overall length	13’ 4”	Coupler	2.0”
Overall width	5’	Approx. weight	250 lb
Width between fenders	4’ 6”	Carrying capacity	1,250 lb
Overall height (fenders)	24”	Tire size	4.80” x 12”
Overall height (winch)	31.5”		

Galvanized

Painted Black

SEA-DOO MOVE II

WITH LEAF SPRING SUSPENSION / AVAILABLE WITH OR WITHOUT MARINE JACK

Overall length	16' 10"	Overall height (fenders)	29"	Approx. weight	485 lb
Overall width	8' 2"	Overall height (winch)	39"	Carrying capacity	2,456 lb
Width between fenders	6' 9"	Coupler	2.0"	Tire size	STI85/80D13

Galvanized

Painted Black

SEA-DOO MOVE I EXTENDED I500

Longer model to fit our longest watercraft.

WITH LEAF SPRING SUSPENSION / AVAILABLE WITH OR WITHOUT MARINE JACK

Overall length	13' 6"	Coupler	2.0"
Overall width	5' 3"	Approx. weight	276 lb
Width between fenders	3' 9"	Carrying capacity	1,499 lb
Overall height (fenders)	24"	Tire size	5.30" x 12"
Overall height (winch)	31.5"		

Galvanized

Painted Black

WANT TO KNOW HOW TO PROPERLY TRAILER YOUR WATERCRAFT?
www.sea-doo.com/videos

SEA-DOO SPARK MOVE II

WITH LEAF SPRING SUSPENSION / AVAILABLE WITH OR WITHOUT MARINE JACK

Overall length	12' 5"	Overall height (fenders)	24"	Approx. weight	340 lb
Overall width	8' 4"	Overall height (winch)	34"	Carrying capacity	1,220 lb
Width between fenders	7' 1"	Coupler	2.0"	Tire size	4.80" x 12"

Galvanized

Painted Black

TRAILER ACCESSORIES

The best way to avoid the unexpected.

SPARE WHEEL SUPPORT

• Includes hardware necessary for installation.

Sea-Doo Move I

295100500 • Painted Black
295100499 • Galvanized

$64.99

Sea-Doo Move II

295100501 • Zinc Coated

$39.99

Move I

Move II

SPARE WHEEL

• Steel spare wheel and tire.

Sea-Doo Move I 1250
12" (30 cm)

295100409 • Galvanized
295100410 • Painted Silver

$94.99

Sea-Doo Move I 1500
12" (30 cm)

295100592 • Galvanized
295100593 • Painted Silver

$124.99

Sea-Doo Move II
13" (33 cm)

295100502 • Galvanized
295100503 • Painted Silver

$189.99

KEY FEATURES INCLUDED	SINGLE			DOUBLE	
	Move I I250	Move I Extended I250	Move I Extended I500	Move II	Sea-Doo SPARK Move II
Rugged and durable hot-dipped galvanized finish (optional)	●	●	●	●	●
Rugged and durable black powder-coat finish (standard)	●	●	●	●	●
2 adjustable wooden bunks with carpet	●	●	●		
4 adjustable wooden bunks with carpet				●	
4 non-adjustable wooden bunks with carpet					●
Adjustable winch strap(s)					●
Non-adjustable winch strap(s)	●	●	●	●	
Multi-adjustable axle (torsion only)	●				
Torsion rubber suspension (for smoother rides) (optional on Sea-Doo Move I)	●				
Leaf spring suspension (optional on Sea-Doo Move I)	●	●	●	●	●
Tire size: 4.80" x 12"	●	●			●
Tire size: 5.30" x 12"			●		
Tire size: ST185/80D13				●	
Ground wired	●	●	●	●	●
Fully enclosed wiring harness	●	●	●	●	●
Submersible lights	●	●	●	●	●
Suspended plastic fender for better splash protection	●	●			●
Suspended "stand on" plastic fender for better splash protection			●	●	
No-maintenance sealed bearing	●	●	●	●	●
WARRANTY	ONE YEAR COMPLETE WARRANTY AND 5 YEARS ON FRAME AND AXLE				

MARINE JACK

- 1,200 lb (544 kg) heavy-duty swivel mount caster jack.
- Corrosion resistant zinc plated finish.
- Provides 12" (30 cm) of screw travel and up to 27" (69 cm) of lift.
- Available pre-installed on all models (optional).

Sea-Doo Move I & II Trailers

295100399

$69.99

iCATCH BOW CUP

Adaptor cup for iCatch system replaces standard bow eye on all Sea-Doo watercraft.

Sea-Doo Move I & II iCatch Trailers

295100586

$49.99

COUPLER STAND

· Prevents coupler from hitting the ground when trailer is not hitched to a vehicle.
· Includes installation hardware neccessary for installation.
· Standard on some model.

Sea-Doo Move I & II Trailers

295100594

$24.99

RATCHET TIE-DOWNS

- 400 lb (181 kg) safe working load.
- 1" x 10' (2.5 cm x 3 m) strap with Sea-Doo, Ski-Doo and Can-Am logos.
- Deluxe ratchet with rubber handle.
- Coated S hooks.
- Pack of 2.

All PWCs

860200447

$16.99

RATCHET TIE-DOWNS

- Designed specifically for strapping a PWC to a trailer: one strap does it all.
- Custom 4-hook system is ideal for quick installation/removal without separating strap from ratchet.
- Fingertip tension adjustment with deluxe ratchet.
- 1" (2.5 cm) Sea-Doo branded polyester strap features hull protector pads, extra strap holder and coated hooks.
- Sold individually.

All PWCs (except Sea-Doo SPARK)

295100389

$19.99

DEPTH FINDER

- Plug-and- play connection.

All GTX & RXT models with 4-TEC engines (2009 and prior, except 2002), models with iS, GTI (2008-2010)

295100324

$359.99

GTI, GTS, GTR, WAKE 155 (2011-2013), GTX & RXT with suspension (2011 and up), GTX & RXT without suspension (2011-2015), WAKE Pro (2015 and prior)

295100421

$309.99

2010 and prior iS models, GTX (2010), RXT, RXT-X and WAKE Pro

295100332

$359.99

GTI, GTS, GTR, WAKE 155 (2014 and up), GTX & RXT without suspension (2016), WAKE Pro (2016), RXP

295100598

$359.99

- Requires Electric Connection Kit (295100599).

Sea-Doo SPARK

295100590

$309.99

SKI MODULE

- Activates ski mode.
- Offers a choice of different preset acceleration curves for perfect launch every time when towing a skier or wakeboarder, plus steady tow speed.
- User-friendly interface on gauge.
- Simple plug-in connection.
- Includes hardware necessary for installation.

Models with iBR (2011 and up)
Standard feature on WAKE models

295100432

$134.99

12-VOLT OUTLET AND INSTALLATION KIT

- Use this 12V outlet to charge your phone or GPS unit.
- Equipped with waterproof cover to prevent water infiltration.

GTX & RXT without suspension (2015 and prior), WAKE Pro (2015 and prior)

295100612

$49.99

Sea-Doo SPARK, GTI, GTS, GTR, WAKE 155, RXP-X

295100577

$49.99

GTX & RXT without suspension (2016), WAKE Pro (2016)

295100675

$49.99

X PACKAGE MODULE

- Activates X Package functions on gauge: lap timer, fuel time and distance to "empty," average and top speed/RPM display, and engine temperature.
- User-friendly interface on gauge.
- Simple plug-in connection.
- Includes hardware necessary for installation.

Models with iBR (2011 and up)
Standard feature on X models

295100431

$134.99

BILGE PUMP KIT

- Keeps engine compartment dry.
- Includes 460 gph bilge pump, stainless steel mounting bracket, bilge fitting, hose and hardware necessary for installation.

GTX, RXT & WAKE Pro (2015)
295100634
$139.99

GTI, GTS, GTR & WAKE 155 (2011-2014), GTX, RXT & WAKE Pro (2010-2015), RXP (2012-2015)
295100434
$139.99

GTI, GTS, GTR & WAKE 155 (2014 and up)
295100597
$139.99

Sea-Doo SPARK
295100497
$129.99

GTX, RXT & WAKE Pro (2016), RXP (2015 and up)
295100678
$139.99

FLUSH KIT

- A must to help keep your engine corrosion-free and to maximize performance.
- Kit includes all necessary components for a hassle-free flush.

Sea-Doo SPARK
Standard on 2015 and up models
295100555
$34.99

FLUSH KIT

- A must to help keep your engine corrosion-free and to maximize performance.
- For use on older watercraft that do not yet have a "T" fitting and don't have the threaded water outlet on the ride shoe.

295500068
$19.99

COUPLER HOSE

- For most watercraft and boat models that already have a "T" fitting.
- Also for watercraft and boat models that use the flush adapter on the ride shoe water outlet.

295500258
$24.99

FLUSH ADAPTER

For most watercraft and boat models with a threaded water outlet fitting on the ride shoe.

295500473
$6.99

SALT-AWAY†

- Mixed with water, it washes away the salt and leaves a protective coating on the surface to prevent rust and corrosion.
- Can also be used for trailer wash and maintenance.

Refill
295100220
1 quart (946 ml)
$25.99

295100219
1 US gallon (3.785 L)
$51.99

Concentrate with dispenser
295100218
1 quart (946 ml)
$48.99

SALT-AWAY DISPENSER UNIT

295100221
$36.99

DRILL PUMP

- Safely and easily removes engine oil.

All 4-TEC engines
295100244
$24.99

YOUR PWC IS THE SUM OF ITS PARTS.

MAKE EVERY ONE COUNT BY USING ONLY GENUINE BRP PARTS.

MAKE THE RIGHT CHOICE

BRP's commitment to quality means that every watercraft is engineered to the highest industry leading standards. Nevertheless, a lack of proper maintenance may cause even the best components to eventually fail.

By using genuine BRP maintenance parts, you are taking care of your investment.

5 ESSENTIAL BRP PRODUCTS TO ENSURE A PROPER TUNE-UP

XPS 4-STROKE OIL CHANGE KIT **P. 62**

IMPELLER **P. 60**

XPS LUBE **P. 64**

WEAR RING **P. 60**

XPS BOAT & PWC CLEANING AND DETAILING KIT **P. 63**

Products available at your authorized participating Sea-Doo dealers only. Consult your authorized Sea-Doo dealer, a guarantee of excellence in the maintenance of your personal watercraft. Only authorized dealers can offer original BRP, Rotax and 100% Sea-Doo products and parts.

BRP REBUILD CENTER

Built on tradition, driven by excellence, and a commitment to quality and customer satisfaction that goes right down to the core. Every rebuilt part that leaves the BRP Rebuild Center meets Rotax's rigorous standards – guaranteed. BRP Rebuild Center is tooled and staffed with one thing in mind - to ensure that Rotax's legendary durability and performance come to life in every BRP-rebuilt shortblock, crankshaft and cylinder. Features core return program. Tested and warrantied parts.

LIFT KIT

- Accurately lifts and positions your watercraft with a lift kit of nylon webbing and vinyl-coated steel lift plates.
- Lifting capacity of 1,200 lb (544 kg).

529036189

$399.99

YUASA† BATTERIES

- Top of the line models from the preferred original equipment battery supplier in North America.

18 amps. Wet (YTX20L) Factory activated (Non-spillable)	30 amps. Dry (YB30CL-B)	30 amps. Wet (Y1X30L) Factory activated (Non-spillable)
410301203	278001882	515176151
$115.99	$134.99	$161.99

YUASA AUTOMATIC 1 AMP BATTERY CHARGER

- Keeps your battery charged and ready to ride.
- Hook it up - plug it in – charge.
- Includes adapter and clips.
- 3-stage charge cycle switches automatically to maintenance mode.
- Easy-to-read 3-color LED charge monitor.
- Built-in overcharge prevention.

529036307

$41.99

IMPELLERS

- High performance impellers designed specifically to maximize your Sea-Doo watercraft and boat performance.

See your certified BRP dealer about matching the right parts to your PWC.

SACRIFICIAL ANODES

- Sacrificial anodes are specifically designed to protect parts of your personal watercraft that are underwater from galvanic corrosion.
- Like the name implies, they essentially "sacrifice" themselves by absorbing the electrochemical process of corrosion to prevent metal components like the impeller, jet pump nozzle or engine from being "eaten away" instead. Galvanic corrosion can cause major damage if not controlled. Inspect your sacrificial anode at least once a month.
- Replace it when it is 50% depleted.

271001920	271001813	271001942
Outside diameter: 26 mm	Outside diameter: 26 mm	$12.99
Height: 6 mm	Height: 13 mm	
$12.99	$12.99	

271001920

271001813

271001942

WEAR RING

- Simple, cost effective way to keep the pump system operating like new.
- Restores tight clearance to your impeller.
- Reduces cavitation and recovers the performance lost caused by a worn ring.

See your certified BRP dealer about matching the right parts to your PWC.

NGK† SPARK PLUGS

- BRP dealers carry the full line of premium NGK spark plugs for Sea-Doo watercraft.

DCP-R8E	CR8EB
707000246	415129403
$3.99	$5.99

MAINTENANCE TIPS TO HELP KEEP YOUR SEA-DOO LIKE NEW

1

FUEL SYSTEM MAINTENANCE

Purchase fuel from busier fuel stations to ensure you fill up with the freshest fuel possible.

Control the inherent moisture problems today's Ethanol-blended fuels can cause by adding periodically fuel treatments. That will protect against corrosion, stabilize fuel to fight oxidation and fuel system deposits.

Avoid using fuel system products containing alcohol. These products can raise the fuel alcohol content to levels greater than standard EIO.

XPS CARBON FREE FUEL TREATMENT **P. 64**

2

KEEP IT CLEAN AND PRISTINE

The water you ride in may contain impurities that can build up on the exterior, taking away the finish of your Sea-Doo watercraft. Road grime can also build up on your watercraft while trailering that could damage various surface materials.

Be sure to wash the exterior, the storage areas and engine compartments after your ride.

XPS BOAT & PWC CLEANING AND DETAILING KIT **P. 63**

3

CORROSION PREVENTION

In addition to cleaning your watercraft after riding with soapy fresh water, salt-water riders can use salt dispersion products such as Salt-Away† to further prevent salt accumulation and corrosion.

After cleaning and drying your watercraft, use a water dispersion product such as XPS Lube on all metallic parts, electrical connectors and moving parts to minimize water collection and corrosion.

XPS LUBE **P. 64**
SALT-AWAY **P. 57**

4

STORING YOUR WATERCRAFT

When storing your watercraft for more than 6 weeks, we recommend you to use XPS Fuel Stabilizer to protect your PWC against fuel contamination, residue build-up and prevent phase separation over time.

Change your engine oil and filter to maximize corrosion protection and ensure durability and reliability.

Remove your watercraft battery and use a Yuasa Charger to keep it totally charged and ensure no load is connected to it over months of non-use.

XPS FUEL STABILIZER **P. 64**
XPS 4-STROKE OIL CHANGE KIT **P. 62**
YUASA AUTOMATIC 1 AMP BATTERY CHARGER **P. 60**

YOU WERE MADE FOR YOUR SEA-DOO PWC. SO WAS XPS ENGINE OIL.

You expect your Sea-Doo watercraft to slice through countless miles of that irresistible blue, splashing up as much wet, wild fun as you can handle. It has never let you down, and it never will. So choose XPS Engine Oil and return the favor.

Rotax engines offer power, performance and a durability that's unmatched – so choose the oil they deserve, one that delivers optimum results at high temperature extremes while still improving mileage. It's reliable, provides consistent lubrication, and is tested and certified by BRP engineers specifically for use in BRP vehicles.

FIND OUT WHY OIL MATTERS www.sea-doo.com/videos

ENGINE OILS

XPS 4-STROKE SYNTHETIC OIL

- Specifically formulated and BRP-engineer certified for use in your Sea-Doo watercraft.
- Premium synthetic base with custom additives provides unmatched lubrication and enhanced corrosion protection.
- Also provides better cold start protection.

1 quart (946 ml)	1 US gallon (3.785 L)
293600112	293600115

XPS 4-STROKE SYNTHETIC BLEND OIL

- Specifically formulated and BRP-engineer certified for use in your Sea-Doo watercraft.
- Synthetic blend with custom additives provides enhanced corrosion protection.

1 quart (946 ml)	1 US gallon (3.785 L)
293600121	293600122

Note: Please contact your nearest dealer for suggested retail prices of oil based products.

XPS 2-STROKE SYNTHETIC OIL

- The ultimate in protection, this 2-stroke fully synthetic injection oil was developed specifically for our highest performance engines.
- Full synthetic XPS has extra detergency to provide optimum engine cleanliness and anti-wear additives for longer engine life.
- This high performance, low smoke, low odor formula is the very best product for Sea-Doo watercraft Rotax RFI or DI 2-stroke engines.

1 quart (946 ml)	1 US gallon (3.785 L)
293600132	293600133

XPS 2-STROKE MINERAL OIL

- Formulated and developed to work specifically in Sea-Doo watercraft equipped with Rotax carbureted 2-stroke engines.
- Offers optimal lubrication.
- Can also be used as pre-mix.

1 quart (946 ml)	1 US gallon (3.785 L)
293600117	293600118

XPS 4-STROKE OIL CHANGE KIT

- Ultra-convenient "all-in-one" oil change kit saves time and money.
- Includes XPS Synthetic Blend Oil, oil filter, o-rings.

295501157 • 1503 4-TEC
$64.99

295501138 • 900 ACE
$34.99

295501156 • 1630 ACE
$67.99

CLEANERS

XPS MICROFIBER TOWELS

- The latest in high-quality detailing towels.
- Made up of extremely fine fibers, their soft surface have been perfected for drying and polishing boats, watercrafts or any shiny finish.
- They are so absorbent they hold up to seven times their weight in water.
- Machine washable means they can be used over and over again.
- Pack of 2.

219701759

$8.99

XPS BOAT & PWC CLEANING AND DETAILING KIT

- Everything needed for care and cleaning, including the bucket.
- Includes: All Purpose Cleaner, Vinyl Cleaner, water-based Spray Cleaner & Polish compatible with Sea-Doo SPARK PWCs, 2 microfiber towels and a Deluxe Wash Sponge.

219702871

$56.99

ALL THESE PRODUCTS ARE AVAILABLE INDIVIDUALLY

XPS All Purpose Cleaner • 32 oz. (946 ml)	**219701709**	**$8.99**
XPS Vinyl Cleaner • 32 oz. (946 ml)	**219701710**	**$13.99**
XPS Spray Cleaner & Polish • 12 oz. (340 g)	**219702844**	**$9.99**
XPS Boat & PWC Wash & Wax • 32 oz. (946 ml)	**219701711**	**$10.99**

XPS GOES FAR.

XPS - Think of it as your first line of defense against engine and vehicle component wear. There's an XPS product that cleans, others that lubricate or stabilize, some that cool and yet others that extend life. Some do only one, others more, but whatever they do they do exceptionally well. And they all provide complete peace of mind where it matters most. Out there.

AFTER ALL, YOU ONLY GET OUT WHAT YOU PUT IN... IF YOU'RE CHOOSING ANYTHING OTHER THAN XPS, YOU'RE NOT PUTTING INTO YOUR SEA-DOO WATERCRAFT WHAT YOU EXPECT TO GET OUT OF IT. THE ABSOLUTE BEST.

XPS. MORE THAN JUST OIL.

MAINTENANCE PRODUCTS

XPS CARBON FREE FUEL TREATMENT
- Prevents problems inherent in Ethanol-blended fuels.
- Extends storage life of fuel up to 12 months.
- Cleans fuel system while preventing corrosion and oxidation.
- Helps keep piston rings, valves and combustion chamber carbon-free to prevent difficult starting and restore peak performance.

219702533 • 12 oz. (355 ml)

$8.99

XPS PRE-MIXED ANTIFREEZE/COOLANT
- Pre-mixed, ready to use.
- Exceptional 5-year extended service life.
- Provides superior heat transfer, protection against corrosion and cavitation.
- Specifically formulated for use in your Sea-Doo vehicle.
- Ideal as a replacement coolant in vehicles that generally use 2-year antifreeze/coolant (green).

1 quart (946 ml)
219702685 • 5 years (orange)

$9.99

XPS STORAGE OIL
- This specialty oil is a must when storing your watercraft away for extended periods.
- Specially formulated to protect the engine's internal parts from the hazards of rust and corrosion due to condensation during storage or prolonged periods of non-use.

413711900 • 12 oz. (350 g)

$9.99

XPS LUBE
- Multipurpose lubricant.
- Prevents rust, corrosion and moisture intrusion.
- Contains active extreme-pressure additives which provide excellent lubrication and antiwear properties.
- Comes in a spray that works upside down.

293600016 • 14 oz. (400 g)

$11.99

XPS FUEL STABILIZER
- Extends fuel life by preventing fuel breakdown during storage.
- Helps prevent difficult starting, throttle hesitation and poor performance.
- Anti-corrosive, anti-oxidant formula protects fuel system and engine.
- Prevents problems inherent in Ethanol-blended fuels.

413408601 • 8 oz. fl (236 ml)

$9.99

XPS JET PUMP OIL
Helps maintain the life of your Sea-Doo watercraft jet pump.

293600011 • 6 oz. (170 g)

$16.99

XPS JET PUMP BEARING GREASE
- Formulated for high performance in extreme conditions.
- Reduces the effects of wear, rust, oxidation, and contamination while providing excellent lubricity for moving parts.

293550032 • 3.9 oz. (110 g)

$9.99

XPS SYNTHETIC GREASE
- Recommended for marine applications.
- This synthetic grease provides the best wear protection and water resistance available.

293550010 • 14 oz. (400 g)

$22.99

TRIPLE-GUARD® MARINE GREASE
- This tough grease that stays in place and is unaffected by vibration, salt water or cold temperatures.
- Reformulated for high water resistance and improved adhesion to metal.
- Won't swell seals, packing or o-rings.
- Totally waterproof to prevent water wash-off.

296000329 • 8 oz. (227 g)

$6.99

ANTI-CORROSION SPRAY
- Heavy, waxy coating specifically designed to protect your engine from rust and corrosion.
- Highly effective against corrosion caused by salt water and salt spray.

219700304 • 11 oz. (312 g)

$11.99

RIDE IT HARD. TREAT IT RIGHT.

XPS. THE ONLY OIL ENGINEERED BY BRP FOR THE LEVEL OF PERFORMANCE YOU EXPECT.

297002202

THE WORLD IS OUR PLAYGROUND

Nothing is more valuable than your playtime. That is why BRP is dedicated to continually finding new and better ways to help you enjoy your favorite powersports. From snow to water to both on- and off-road fun, our passion for adventure fuels the innovations that result in the ultimate powersports experience for our customers. We value the land and water we play on and are committed to protecting it. Our desire to thrill is paired with an emphasis on rider responsibility, placing personal safety above all else. So that each outing can be the most enjoyable, memorable and thrilling experience possible. Because your free time should always be your best time.

www.brp.com

SKI-DOO® LYNX® SEA-DOO® EVINRUDE® ROTAX® CAN-AM®

SEA-DOO®

BRP

2016 OPERATOR'S GUIDE

Includes Safety, Watercraft and Maintenance Information

RXT™ / GTX† / WAKE™ PRO SERIES

⚠ WARNING

Read this guide thoroughly.
It contains important safety information.
Minimum recommended operator's age: 16 years old.
Keep this Operator's Guide in the watercraft.

2 1 9 0 0 1 6 9 0

Original Instructions

⚠ WARNING

Disregarding any of the safety precautions and instructions contained in this Operator's Guide, *SAFETY DVD* video and on-product safety labels could cause injury including the possibility of death!

CALIFORNIA PROPOSITION 65 WARNING

⚠ WARNING

This vehicle contains or emits chemicals known to the state of California to cause cancer and birth defects or other reproductive harm.

In Canada, products are distributed by Bombardier Recreational Products Inc. (BRP).

In USA, products are distributed by BRP US Inc.

This is a non-exhaustive list of trademarks that are the property of Bombardier Recreational Products Inc. or its affiliates:

4-TEC™	iBR™	RXT™-X™
ACE™	iControl™	RXT™-X™ aS™
D.E.S.S.™	iS™	Sea-Doo®
GTX™	iTC™	T.O.P.S.™
GTX Limited™	O.T.A.S.™	VTS™
GTX Limited iS™	Rotax®	WAKE™ PRO 215
GTX S™	RXT™	XPS™

smo2016-007 en JT
®™ and the BRP logo are trademarks of Bombardier Recreational Products Inc. or its affiliates.
©2015 Bombardier Recreational Products Inc. and BRP US Inc. All rights reserved.

FOREWORD

Deutsch	Dieses Handbuch ist möglicherweise in Ihrer Landessprache verfügbar. Bitte wenden Sie sich an Ihren Händler oder besuchen Sie: **www.operatorsguide.brp.com**.
English	This guide may be available in your language. Check with your dealer or go to: **www.operatorsguide.brp.com**.
Español	Es posible que este manual esté disponible en su idioma. Consulte a su distribuidor o visite: **www.operatorsguide.brp.com**.
Français	Ce guide peut être disponible dans votre langue. Vérifier avec votre concessionnaire ou aller à: **www.operatorsguide.brp.com**.
日本語	このガイドは、言語によって翻訳版が用意されています。. ディーラーに問い合わせるか、次のアドレスでご確認ください：**www.operatorsguide.brp.com.**
Nederlands	Deze handleiding kan beschikbaar zijn in uw taal. Vraag het aan uw dealer of ga naar: **www.operatorsguide.brp.com**.
Norsk	Denne boken kan finnes tilgjengelig på ditt eget språk. Kontakt din forhandler eller gå til: **www.operatorsguide.brp.com**.
Português	Este manual pode estar disponível em seu idioma. Fale com sua concessionária ou visite o site: **www.operatorsguide.brp.com**.
Suomi	Käyttöohjekirja voi olla saatavissa omalla kielelläsi. Tarkista jälleenmyyjältä tai käy osoitteessa: **www.operatorsguide.brp.com**.
Svenska	Denna bok kan finnas tillgänglig på ditt språk. Kontakta din återförsäljare eller gå till: **www.operatorsguide.brp.com**.

Congratulations on your purchase of a new Sea-Doo® personal watercraft (PWC). It is backed by the BRP warranty and a network of authorized Sea-Doo personal watercraft dealers ready to provide the parts, service or accessories you may require.

Your dealer is committed to your satisfaction. He has taken training to perform the initial setup and inspection of your watercraft as well as completed the final adjustment before you took possession. If you need more complete servicing information, please ask your dealer.

At delivery, you were also informed of the warranty coverage and signed the *PREDELIVERY CHECK LIST* to ensure your new watercraft was prepared to your entire satisfaction.

Know Before you Go

To learn how to reduce the risk for you or other persons being injured or killed, read the following sections before you operate the watercraft:

– *SAFETY INFORMATION*
– *WATERCRAFT INFORMATION*.

Read and understand all safety labels on your watercraft and watch attentively your *SAFETY DVD* video.

Failure to follow the warnings contained in this Operators' Guide can result in serious injury or death.

BRP highly recommends that you take a safe boating course. Please check with your dealer or local authorities for availability in your area.

In certain areas, an operator competency card is mandatory to operate a pleasure craft.

⚠ WARNING

Get familiar with this PWC; it may exceed the performance of other PWCs you have ridden.

RXT-X and RXT-X aS Models

⚠ WARNING

This is a high performance PWC. Inexperienced riders may overlook risks and be surpised by the specific behavior of this PWC in any water condition.

Safety Messages

This Operator's Guide utilizes the following symbols and words to emphasize particular information:

The safety alert symbol ⚠ indicates a potential injury hazard.

⚠ WARNING

Indicates a potential hazard which, if not avoided, could result in serious injury or death.

⚠ CAUTION **Indicates a potentially hazardous situation which, if not avoided, could result in minor or moderate injury.**

NOTICE **Indicates an instruction which, if not followed, could severely damage watercraft components or other property.**

About this Operator's Guide

This Operator's Guide has been prepared to acquaint the owner/operator or passenger with this personal watercraft and its various controls, maintenance and safe riding instructions.

Keep this Operator's Guide in the watercraft as you can refer to it for operation, instructing others, maintenance and troubleshooting.

Note that this guide is available in several languages. In the event of any discrepancy, the English version shall prevail.

If you want to view and/or print an extra copy of your Operator's Guide, simply visit the following website **www.operatorsguide.brp.com**.

The informations contained in this document are correct at the time of publication. However, BRP maintains a policy of continuous improvement of its products without imposing upon itself any obligation to install them on products previously manufactured. Due to late changes, some differences between the manufactured product and the descriptions and/or specifications in this guide may occur. BRP reserves the right at any time to discontinue or change specifications, designs, features, models or equipment without incurring any obligation upon itself.

This Operator's Guide and the *SAFETY DVD* video should remain with the watercraft when it's sold.

TABLE OF CONTENTS

FOREWORD **1**
Know Before you Go 1
Safety Messages 2
About this Operator's Guide 2

SAFETY INFORMATION

GENERAL PRECAUTIONS **10**
Avoid Carbon Monoxide Poisoning 10
Avoid Gasoline Fires and Other Hazards 10
Avoid Burns from Hot Parts 10
Accessories and Modifications 10
SPECIAL SAFETY MESSAGES **11**
Reminders Regarding Safe Operation 11
Water Sports (Towing with the Watercraft) 15
Hypothermia 16
Safe Boating Courses 17
ACTIVE TECHNOLOGIES (iCONTROL) **18**
Introduction 18
iTC (intelligent Throttle Control) 18
iBR (intelligent Brake and Reverse System) 19
iS (intelligent Suspension) (GTX Limited iS 260 Only) 20
SAFETY EQUIPMENT **21**
Required Safety Equipment 21
Additional Recommended Equipment 23
PRACTICE EXERCISES **24**
Where to Practice Exercises 24
Practice Exercises 24
Important Factors Not to Neglect 25
NAVIGATION RULES **26**
Operating Rules 26
FUELING **28**
Fueling Procedure 28
Fuel Requirements 28
TRAILERING INFORMATION **30**
IMPORTANT ON-PRODUCT LABELS **32**
Watercraft Safety Labels 32
Compliance Labels 40
PRE-RIDE INSPECTION **44**
What to Do Before Launching the Watercraft 44
What to Do After Launching the Watercraft 48

WATERCRAFT INFORMATION

CONTROLS **52**
1) Handlebar 53
2) Throttle Lever 53
3) iBR Lever (intelligent Brake and Reverse) 54
4) Engine Cut-Off Switch 54
5) Engine START/STOP Button 55
6) VTS (Variable Trim System) Button (all Models Except GTX 155 and GTX S 155) 56
7) Sport Button 56
8) ECO Button 56
9) MODE/SET Buttons 57
10) UP/DOWN Buttons 57
11) Cruise Button (Except RXT-X and RXT-X aS Models) 57

INFORMATION CENTER (GAUGES) **58**
Information Center Description 58
1) Speedometer 60
2) Tachometer 60
3) Multifunction Gauge 60
4) Indicator Lights 62
5) Fuel Level Indication 63
6) VTS Position 63
7) iS Position (GTX Limited iS Only) 63
8) Numerical Display 64
9) Multifunction Display 66
10) Water Depth Display (GTX Limited and GTX Limited iS Models) 66
11) Lake Water Temperature Display (GTX Limited and GTX Limited iS Models) 66
12) Hour Meter Display (HR) 66
13) iBR Position 67
14) Compass 67
15) Touring Mode Indicator (all Models Except RXT-X/RXT-X aS) 67
16) Sport Mode Indicator 68
17) Boost Gauge (RXT-X/RXT-X aS) 68
Navigating the Multifunction Display 68
Changing Numerical Display Indication 71
Resetting Numerical Display Indication 72
Multifunction Gauge Setup 72

EQUIPMENT **74**
1) Glove Box 74
2) Front Storage Bin 75
3) Rear Storage Bins 77
4) Fire Extinguisher Holder 78
5) Seat 78
6) Passenger Handholds 79
7) Boarding Step (If Equipped) 79

EQUIPMENT (cont'd)
8) Boarding Platform 80
9) Speed-Ties (GTX Limited and GTX Limited iS Models) 80
10) Front and Rear Eyelets 82
11) Mooring Cleats 83
12) Bilge Drain Plugs 83
13) Adjustable Sponsons (RXT-X aS) 83
14) Adjustable Trim Tabs (RXT-X aS) 85
15) Bow Stabilizer (RXT-X aS) 86
16) Ski/Wakeboard Post (WAKE Pro model) 86
17) Wakeboard Rack (WAKE Pro model) 87
18) Steering Tilt Handle 89
19) Adjustable Ergonomic Steering (AES) (RXT-X/RXT-X aS) 90

SUSPENSION 91
iS (intelligent Suspension) (GTX Limited iS) 91
aS (adjustable Suspension) (RXT-X aS) 94
S (Manual Suspension) (GTX S 155) 95

BREAK-IN PERIOD 97
Operation During Break-In Period 97

OPERATING INSTRUCTIONS 98
Boarding the Watercraft 98
How to Start Engine 102
How to Stop the Engine 102
How to Steer the Watercraft 103
How to Engage Neutral 104
How to Engage Forward 105
How to Engage and Use Reverse 105
How to Engage and Use Braking 106
How to Use the Variable Trim System (VTS) 107
General Operating Recommendations 111

OPERATING MODES 114
Touring Mode 114
Sport Mode 114
ECO Mode (Fuel Economy Mode) 116
Cruise Mode 117
Slow Speed Mode (all Models Except RXT-X and RXT-X aS) 119
Ski Mode 121
Learning Key Mode 124

SPECIAL PROCEDURES 126
Jet Pump Water Intake and Impeller Cleaning 126
Capsized Watercraft 128
Submerged Watercraft 129
Water-Flooded Engine 129
Towing the Watercraft in Water 129

MAINTENANCE

MAINTENANCE SCHEDULE **132**
MAINTENANCE PROCEDURES **136**
Engine Oil 136
Engine Coolant 138
Ignition Coils 139
Spark Plugs 141
Exhaust System 142
Ride Plate and Water Intake Grate 144
Sacrificial Anode 145
Ski/Wakeboard Post (Wake) 145
Fuses 145
WATERCRAFT CARE **148**
Post-Operation Care 148
Watercraft Cleaning 148
STORAGE AND PRESEASON PREPARATION **149**
Storage 149
Preseason Preparation 152

TECHNICAL INFORMATION

WATERCRAFT IDENTIFICATION **154**
Hull Identification Number 154
Engine Identification Number 154
RF D.E.S.S. KEY **155**
ENGINE EMISSIONS INFORMATION **156**
Manufacturer's Responsibility 156
Dealer's Responsibility 156
Owner Responsibility 156
EPA Emission Regulations 156
SPECIFICATIONS **157**

TROUBLESHOOTING

TROUBLESHOOTING GUIDELINES **166**
MONITORING SYSTEM **171**
Fault Codes 171
Indicator Lights and Message Display Information 172
Beeper Code Information 174

WARRANTY

BRP LIMITED WARRANTY – USA AND CANADA: 2016 SEA-DOO® PERSONAL WATERCRAFT 178

US EPA EMISSION-RELATED WARRANTY 182

CALIFORNIA AND NEW YORK EMISSION CONTROL WARRANTY STATEMENT FOR MODEL YEAR 2016 SEA-DOO® PERSONAL WATERCRAFT 185

BRP INTERNATIONAL LIMITED WARRANTY: 2016 SEA-DOO® PERSONAL WATERCRAFT 189

BRP LIMITED WARRANTY FOR THE EUROPEAN ECONOMIC AREA, THE COMMONWEALTH OF THE INDEPENDENT STATES, TURKEY: 2016 SEA-DOO® PERSONAL WATERCRAFT 194

CUSTOMER INFORMATION

PRIVACY INFORMATION 200

CHANGE OF ADDRESS/OWNERSHIP 201

SAFETY INFORMATION

GENERAL PRECAUTIONS

Avoid Carbon Monoxide Poisoning

All engine exhaust contains carbon monoxide, a deadly gas. Breathing carbon monoxide can cause headaches, dizziness, drowsiness, nausea, confusion and eventually death.

Carbon monoxide is a colorless, odorless, tasteless gas that may be present even if you do not see or smell any engine exhaust. Deadly levels of carbon monoxide can collect rapidly, and you can quickly be overcome and unable to save yourself. Also, deadly levels of carbon monoxide can linger for hours or days in enclosed or poorly ventilated areas. If you experience any symptoms of carbon monoxide poisoning, leave the area immediately, get fresh air and seek medical treatment.

To prevent serious injury or death from carbon monoxide:

- Never run the watercraft in poorly ventilated or partially enclosed areas such as boat houses, seawalls or other boats in close proximity. Even if you try to ventilate engine exhaust, carbon monoxide can rapidly reach dangerous levels.
- Never run the watercraft outdoors where engine exhaust can be drawn into a building through openings such as windows and doors.
- Never stand behind the watercraft while the engine is running. A person standing behind a running engine may inhale high concentrations of exhaust fumes. Inhalation of concentrated exhaust fumes that contain carbon monoxide can result in CO poisoning, serious health problems and death.

Avoid Gasoline Fires and Other Hazards

Gasoline is extremely flammable and highly explosive. Fuel vapors can spread and be ignited by a spark or flame many feet away from the engine. To reduce the risk of fire or explosion, follow these instructions:

- Use only an approved red gasoline container to store fuel.
- Strictly adhere to the instructions in *FUELING* section.
- Never start watercraft if gasoline or gasoline vapor odors is present in the engine compartment.
- Never start or operate the engine if the fuel cap is not properly secured.
- Do not carry gasoline containers in the front storage compartment or anywhere else on the watercraft.

Gasoline is poisonous and can cause injury or death.

- Never siphon gasoline with your mouth.
- If you swallow gasoline, get any in your eyes, or inhale gasoline vapors, see a doctor immediately.

If gasoline is spilled on you, wash thoroughly with soap and water and change your clothes.

Avoid Burns from Hot Parts

Certain components may become hot during operation. Avoid contact during and shortly after operation to avoid burns.

Accessories and Modifications

Do not make unauthorized modifications, or use accessories that are not approved by BRP. Since these changes have not been tested by BRP, they may increase the risk of accidents or injuries, and they can make the watercraft illegal for use on water.

See your authorized Sea-Doo dealer for available accessories for your watercraft.

Reminders Regarding Safe Operation

The performance of this watercraft may significantly exceed that of other watercrafts you may have operated. Make sure you read and understand the content of this Operator's Guide to become completely familiar with the controls and operation of the watercraft before embarking on your first trip, or taking on a passenger(s). If you have not had the opportunity to do so, practice driving solo in a suitable traffic free area to become accustomed to the feel and response of each control. Be fully familiar with all controls before accelerating above idle speed. Do not assume that all PWCs handle identically. Each model differs, often substantially.

Always keep in mind that as the throttle lever is returned to the idle position, less directional control is available. To turn the watercraft, both steering and throttle are necessary. Do not release the throttle when trying to steer away from objects. You need throttle to steer. If engine is shut off, directional control is lost.

Although most watercrafts have no means of braking, advancement in technologies now permit us to offer models that are equipped with a braking system called the iBR™ system. Practice braking maneuvers in a safe traffic-free area to become familiar with handling under braking and with stopping distances under various operating conditions.

Stopping distance will vary depending on initial speed, load, wind, number of riders and water conditions. The amount of braking power commanded by the operator using the iBR lever (intelligent Brake and Reverse) will also affect stopping distance.

When braking, riders must brace themselves against the deceleration force to prevent from moving forward on the watercraft and losing balance.

When operating an iBR equipped watercraft, be aware that other boats following or operating in close proximity may not be able to stop as quickly.

When at speed and the brake is first applied, a plume of water will shoot up in the air behind the watercraft which may cause the operator of a following watercraft to momentarily loose sight of your PWC. It is important to inform the operator of a watercraft who intends to follow in a convoy formation, of the braking and maneuvering capability of your PWC, what the plume of water indicates, and that a greater distance should be maintained between watercrafts.

When actuating the iBR control lever while the watercraft has some forward speed, the braking mode will engage and generate a deceleration proportional to the iBR lever position. The more you pull in the iBR lever, the greater the braking force becomes. Be careful to gradually actuate the iBR lever to adjust the intensity of the braking force, and to simultaneously release the throttle lever.

Keep the tether cord clip attached to the operators' PFD or wrist (wrist strap required) at all times and keep it free from snagging on the handlebars to help ensure the engine stops should the operator fall off. After riding, remove the tether cord from the engine cut-off switch to avoid unauthorized use by children or others. If the operator falls off the watercraft and the tether cord is not attached as recommended, the watercraft engine will not stop.

Ride within your limits and level of riding ability.

Avoid aggressive maneuvers to reduce the risk of loss of control, ejection and collision. Understand and respect the performance of your watercraft.

Avoid riding in very rough waters or practicing extreme maneuvers like jumping wakes or waves.

The brake feature of the iBR system cannot prevent your PWC from drifting due to current or wind. It has no braking effect on the rearward velocity. Also note that your engine must be running to be able to use the brake.

The personal watercrafts' jet thrust can cause injury. The jet pump may pick up debris and throw it rearward causing a risk of injuring people, damaging the jet pump, or other property.

Observe the instructions on all safety labels. They are there to help assure that you have a safe and enjoyable outing.

Do not store any objects in areas that are not designed specifically for storage.

Riding with passenger(s), pulling tubes, a skier, or a wake boarder makes the PWC handle differently and requires greater skill.

Certain PWC models come equipped with tow eyelets or a ski pole (Wake only) which, can be used to attach a tow rope for a skier, tube or wake boarder. Do not use these attachment points or any other portion of the watercraft to tow a para-sail or any other craft. Personal injury or severe damage may occur.

Combustion engines need air to operate; consequently this PWC cannot be totally watertight. Any maneuvers such as turning constantly in tight circles, plunging the bow through waves, or capsizing the watercraft, that cause the air inlet openings to be under water may cause severe engine problems due to water ingestion. Refer to *HOW TO STEER WATERCRAFT* in the *OPERATING INSTRUCTIONS* section and the *WARRANTY* section contained in this Operator's Guide.

Engine exhaust contains carbon monoxide (CO), which can cause serious health problems or death if inhaled in sufficient quantities. Do not operate the PWC in a confined area or allow CO to accumulate around the PWC, or in enclosed or sheltered areas such as when docked, or when rafting. Be aware of the risk of CO emanations from exhaust of other PWCs.

Know the waters in which the watercraft is to be operated. Current, tides, rapids, hidden obstacles, wakes and waves etc. can affect safe operation. It is not advisable to operate the watercraft in rough waters or inclement weather.

In shallow water, proceed with caution and at very low speeds. Grounding or abrupt stops may result in injury and watercraft damage. Debris may also be picked up and thrown rearward by the jet pump onto people or property.

Always ride responsibly and safely. Use common sense and courtesy.

Respect no wake zones, the environment, and the rights of other users of the waterways. As the operator and owner of a PWC, you are responsible for damage by the wake of your PWC. Do not let anyone throw refuse overboard.

While your watercraft has the capacity of operating at high speeds, it is strongly recommended that high speed operation only be applied when ideal conditions exist and are permitted. Higher speed operation requires a higher degree of skill and increases the risk of severe injuries.

The forces generated on the body of riders while turning, negotiating waves or wakes, operating in choppy waters, or falling off the watercraft, especially at higher speeds, may cause injury including the possibility of broken bones or more serious bodily injuries. Remain flexible and avoid sharp turns.

PWCs are not designed for night-time operation.

Certain PWC models are equipped with an intelligent suspension (GTX Limited iS). Although the system absorbs part of the vertical forces and therefore reduces the impact force to the body, it cannot eliminate it completely. To prevent you and your passenger(s) from being bounced and eventually be ejected from the watercraft, reduce your speed.

Before Getting Underway

For safety reasons and proper care, always perform the pre-ride inspection as specified in your Operator's Guide before operating your watercraft.

Do not exceed the payload or passenger capacities for your watercraft. Overloading can affect maneuverability, stability and performance. Also, heavy seas reduce capacity. A payload or person capacity plate is not an excuse for failure to use common sense or good judgment.

Regularly inspect the PWC, hull, engine, safety equipment, and all other boating gear and keep them in safe operating condition.

Be sure you have the minimum required safety equipment, PFDs and any additional gear needed for your cruise.

Check that all lifesaving equipment, including fire extinguisher, are in safe operating condition and easily accessible. Show all passengers where this equipment is stored on the PWC, and make sure they know how to use it.

Keep an eye on the weather. Check local weather broadcasts before departure. Be alert to changing conditions.

Keep accurate and up-to-date charts of the boating area on board. Before getting underway, check water conditions in the planned boating area.

Ensure there is enough fuel on board for the planned trip. Always verify fuel level before use and during the ride. Apply the principle of 1/3 of the fuel to reach your destination, 1/3 to return, and keep 1/3 in reserve. Allow for changes due to adverse weather or other delays.

Operator and Passenger Awareness

Read and understand all safety labels on the Sea-Doo PWC, the Operator's Guide, all other safety documents, and watch the *SAFETY DVD* video before operating the PWC.

Respect applicable laws. Check local and federal boating laws applicable to the waterways where you intend to use your watercraft. Learn the local navigation rules. Know and understand the applicable navigation system (such as buoys and signs).

Remember that sun, wind, fatigue or illness may impair your judgement and reaction time.

Operation of this PWC by a person under 16 years of age, or a person with a disability that impairs vision, reaction time, judgment, or operation of the controls is NOT recommended.

Always properly use the tether cord when operating the watercraft and ensure that all passengers are familiar with its use.

Ensure that any operator and all passengers know how to swim and how to re-board the PWC from the water. Boarding in deep water can be strenuous. Practice in chest-deep water before operating or embarking your watercraft in deep water. Ensure that any operator and all passengers wear a PFD at all times and take extra precautions when boating.

Never turn handlebar while someone is near the rear of watercraft. Keep away from steering moving parts (nozzle, iBR gate, linkages, etc.).

Do not start the engine or operate the watercraft if anyone is in the water nearby, or near the rear of the watercraft.

Be aware of the iBR gate movement when starting the engine, shutting down the engine or using the iBR lever. Automatic movement of the gate may squeeze fingers or toes of people taking a hold on the back or your PWC.

The operator and passenger(s) should be properly seated and have a firm grip on a handhold before starting the watercraft, and at all times when the watercraft is in motion. All passenger(s) should be instructed to use the handholds provided, or to hold on to the waist of the person in front of them. Each passenger must be able to simultaneously place both feet firmly flat against each footwell when properly seated. When going over waves, passenger(s) may raise their body slightly off the seat to absorb the shocks with their legs.

When braking or decelerating, riders must brace themselves against the deceleration force to prevent from moving forward on the watercraft and losing balance.

When accelerating on a PWC with a passenger(s), whether from a complete stop or while underway, always do so progressively. Fast acceleration may cause your passenger(s) to loose their balance and fall rearward off the watercraft. Make sure that your passenger(s) are aware of or can anticipate any rapid acceleration.

Severe internal injuries can occur if water is forced into body cavities as a result of falling into water or being near a jet thrust nozzle. Consequently, the wear of a bottom wet suit is highly recommended.

Keep away from the intake grate while the engine is running. Items such as long hair, loose clothing, or PFD straps can become entangled in moving parts.

If the throttle lever is depressed while braking, the iBR system will disable the throttle command by the user. When releasing the iBR lever while the throttle lever is still depressed, the throttle command will regain control and generate an acceleration after a short delay. Release throttle lever if acceleration is not needed.

Before reboarding, make sure engine is off and tether cord is removed from the engine cut-off switch.

To prevent accidental starting, always detach the tether cord from the engine cut-off switch when swimmers are boarding, nearby, or during removal of any weeds or debris from the intake grate.

On a PWC, never place your feet and legs in the water to aid turning.

Operation by Minors

Minors should always be supervised by an adult whenever operating a watercraft. Laws regarding the minimum age and licensing requirements of minors may vary from one jurisdiction to another. Be sure to contact the local boating authorities for information regarding the legal operation of a PWC in the intended jurisdiction of use. BRP recommends a minimum operator age of 16 years old.

Drugs and Alcohol

Never use your PWC with drugs or alcohol. Like driving a car, driving a watercraft requires the operator to be sober, attentive and alert. Operating a watercraft while intoxicated or under the influence of drugs is not only dangerous, but it is also a Federal offense carrying a significant penalty. These laws are vigorously enforced. The use of drugs and alcohol, singly or in combination, decreases reaction time, impedes judgment, impairs vision, and inhibits your ability to safely operate a watercraft.

⚠ WARNING

Alcohol consumption and boating do not mix! Operating with the use of drugs or alcohol endangers the lives of your passengers, other boaters, and yourself. Federal laws prohibit operating a watercraft with the use of drugs or alcohol.

Water Sports (Towing with the Watercraft)

⚠ WARNING

Avoid personal injury! Your PWC is not designed for and should not be used for pulling another craft, parasails, kites, gliders, or any device which can become airborne. Use your watercraft only for water sports it was designed for.

Water skiing, wakeboarding, or riding a towed inflatable apparatus are some of the more popular water sports. Taking part in any water sport requires increased safety awareness by the participant and the watercraft operator. If you have never towed someone behind your PWC before, it is a good idea to spend some hours as an observer, working with and learning from an experienced operator. It is also important to be aware of the skill and experience of the person being towed.

Everyone participating in a water sport should observe these guidelines:

- Riding with passenger(s) or pulling a tube, skier or wakeboarder makes the watercraft handle differently and requires greater skill.
- Always respect the safety and comfort of your passenger(s) and person being towed on skis, wakeboard or other water products.
- Always carry an observer when pulling a tube, skier or wakeboarder to observe the person being towed and inform the operator about the participants' hand signals. The operator must focus his attention on operating the watercraft and the waters ahead.
- Proceed with only as much speed as required and follow the observers' instructions.
- When pulling a tube, skier, or a wake boarder, do not make tight sharp turns or use the braking system unless absolutely necessary. Remember that although this PWC is manoeuvrable and has stopping capabilities, the person in tow may not be able to avoid an obstacle, or the PWC with which it is being towed.
- Allow only capable swimmers to take part in any water sport.
- Always wear an approved personal flotation device (PFD). Wearing a properly designed PFD helps a stunned or unconscious person stay afloat.
- Be considerate to others you share the water with.
- Both the operator and observer should monitor the location of the tow rope when participating in watersports. A slack tow rope can become entangled with a person(s) or objects on the PWC or in the water, particularly when making a tight turn or circling, and cause serious personal injury.
- Do not tow a person in any water sport on a short tow rope such that the person inhales exhaust fumes in concentration. Inhalation of concentrated exhaust fumes, which contain carbon monoxide, can result in CO poisoning, personal injury and death.

– Use a tow rope of sufficient length and size and make sure it is adequately secured to your watercraft. Always store tow rope when not in use. While some watercrafts are equipped or can be fitted with a specially designed towing mechanism, avoid installing a tow pole on a PWC. It can become a hazard should someone fall on it.
– Give immediate attention to a person who has fallen. He or she is vulnerable in the water alone and may not be seen by other boaters.
– Approach a person in the water from the lee side (opposite the direction of the wind). Turn off the motor before coming close to the person.
– Participate in water sports only in safe areas. Stay away from other boats, channels, beaches, restricted areas, swimmers, and heavily traveled waterways and underwater obstructions.
– Turn off the engine and anchor the watercraft before swimming.
– Swim only in areas designated as safe for swimming. These are usually marked with a swim area buoy. Do not swim alone or at night.

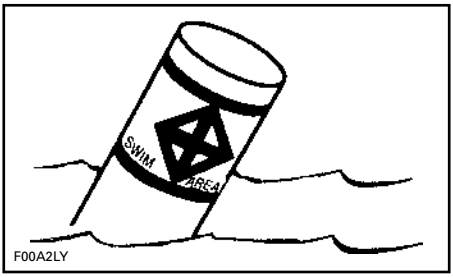

SWIM AREA BUOY

– Do not water ski between sunset and sunrise. It is illegal in most areas.
– Do not drive the watercraft directly behind a water skier, tuber or wakeboarder. At 40 km/h (25 MPH) per hour, the watercraft will overtake a person who falls in the water 60 m (197 ft) in front of your watercraft in about 5 seconds.
– Shut off the engine and remove the tether cord from the engine cut-off switch when anyone is in the water nearby.
– Stay at least 45 m (148 ft) away from areas marked by a diver down float.

Avoid personal injury! Do not allow anyone near the propulsion system or intake grate, even when the engine is off. Items such as long hair, loose clothing or personal flotation device straps can become entangled in moving parts resulting in serious injury or drowning. In shallow water, shells, sand, pebbles or other objects could be drawn up by the jet pump and be thrown rearward.

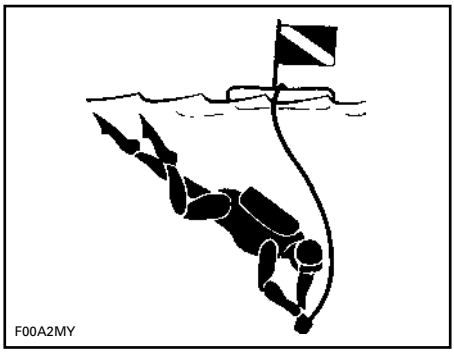

DIVER DOWN FLOAT

For more information on approved, legal and safe practice of water sports, please contact the local legal authority on water sports safety for the area you plan to practice in.

Hypothermia

Hypothermia, the loss of body heat resulting in a subnormal body temperature, is a significant cause of death in

boating accidents. After an individual has succumbed to hypothermia, he or she will lose consciousness and then drown.

PFDs can increase survival time because of the insulation they provide.

Naturally, the warmer the water, the less insulation one will require. When operating in cold water (below 4°C (40°F)) consideration should be given to using a coat or jacket style PFD as they cover more body area than the vest style PFDs.

Some points to remember about hypothermia protection:

- While afloat in the water, do not attempt to swim unless it is to reach a nearby boat, fellow survivor, or a floating object onto which you can lean or climb. Unnecessary swimming increases the rate of body heat loss. In cold water, drown-proof methods that require putting your head in the water are not recommended. Keep your head out of the water. This will greatly lessen heat loss and increase your survival time.
- Maintain a positive attitude about your survival and rescue. This will improve your chances of extending your survival time until you can be rescued. Your will to live does make a difference!
- If there is more than one person in the water, huddling together is recommended. This action tends to reduce the rate of heat loss and thus increase the survival time.
- Always wear your PFD. It won't help you fight off the effects of hypothermia if you don't have it on when you go into the water.

Safe Boating Courses

Many countries recommend or require a boating safety course. Check with your local competent authorities.

Check local and federal boating laws applicable to the waterways where you intend to use your watercraft. Learn the local navigation rules. Know and understand the applicable navigation system (such as buoys and signs).

ACTIVE TECHNOLOGIES (iCONTROL)

Introduction

NOTE: Some functions or features described in this section may not apply to every PWC model, or may be available as an option.

iControl™ (intelligent Control systems) provides an environment whereby the operator can control many systems without taking his hands off the handlebars.

All controls are at the operator's finger tips and activated by pressing a button or pulling a lever. The operator's attention can thus remain focused on the water and driving the watercraft.

Each control is electronic and provides a command signal to an electronic module whose function is to assure proper operation of its system within set parameters.

The various systems grouped under iControl are the:

- iTC™ (intelligent Throttle Control)
- iBR (intelligent Brake and Reverse)
- iS™ (intelligent suspension) (GTX Limited iS 260 Only)
- O.T.A.S.™ (Off Throttle Assisted Steering).

These systems function together to provide features such as cruise control, slow speed mode and braking, improved watercraft response to operator inputs, increased maneuverability and control.

It is extremely important for operators to read all information contained in this Operator's Guide so as to become familiar with this watercraft, its systems, controls, capabilities and limitations.

iTC (intelligent Throttle Control)

The system uses an electronic throttle control (ETC) that provides command signals to the ECM (Engine Control Module). With this system, there is no need for a traditional throttle cable.

The iTC allows the following operating modes:

- Touring mode
- Sport mode
- ECO mode
- Cruise mode (if equipped)
- Slow speed mode (if equipped with cruise mode)
- Ski mode (if equipped).

The OTAS (Off throttle Assisted Steering) is also controlled by the iTC.

Touring Mode

The Touring mode is the default riding mode.

In touring mode, available engine power and acceleration is reduced when accelerating from a complete stop and when operating in the low engine power range under certain conditions.

ECO Mode

When ECO mode (FUEL ECONOMY mode) is selected, fuel consumption is reduced for any given RPM. This mode is ideal when cruising and maximum fuel efficiency is desired.

Refer to *OPERATING MODES* for detailed instructions.

Sport Mode

In sport mode, maximum engine power is available throughout the engine operational range.

Refer to *OPERATING MODES* for detailed instructions.

Cruise Mode

Cruise mode allows the operator to set a desired maximum speed of the watercraft when operating above 3800 RPM.

Cruise mode limits watercraft speed but does not maintain it. The operator must hold the throttle lever depressed to maintain forward speed,

unlike an automotive type cruise control which maintains a constant speed while throttle pedal is released.

As you proceed under a constant cruising speed setting, hold the throttle lever fully depressed in order to keep your full attention to maintaining good situational awareness.

Refer to *CRUISE MODE* in *OPERATING MODES* for detailed instructions.

Slow Speed Mode

Slow speed mode is a function of cruise mode which allows the operator to adjust and set idle speed corresponding to a watercraft speed of 1.6 km/h to 11 km/h (1 MPH to 7 MPH). The throttle lever should not be depressed while operating in slow speed mode.

Refer to *OPERATING MODES* for detailed instructions.

Ski Mode

Ski mode allows for a controlled launch and accurately maintained maximum towing speed when towing a skier or wake boarder.

Refer to *OPERATING MODES* for detailed instructions.

O.T.A.S. System (Off-Throttle Assisted Steering)

The O.T.A.S. (Off-Throttle Assisted Steering) system provides additional maneuverability in off-throttle situations.

Limitations

The O.T.A.S. system cannot help you maintain control or prevent collisions in all situations.

The O.T.A.S. system is electronically activated when the operator initiates a full turn and releases the throttle at the same time.

Refer to *HOW TO STEER THE WATERCRAFT* in *OPERATING INSTRUCTIONS* section for details.

Learning Key

The Sea-Doo LK™ learning key limits the speed of the watercraft therefore enabling first time users and less experienced operators to learn how to operate the watercraft while gaining the necessary confidence and control.

Limitations

The ability of a novice to operate the watercraft can be exceeded even when a learning key is used.

Refer to *OPERATING MODES* for information on using and programming learning keys.

iBR (intelligent Brake and Reverse System)

This watercraft uses an electronically controlled braking and reverse system called the iBR system (intelligent Brake and Reverse).

The iBR module controls the position of the iBR gate to provide forward thrust, reverse thrust, braking thrust, and neutral.

The operator commands the position of the iBR gate using either the throttle lever for forward thrust, or the iBR lever for neutral, reverse, and for the braking function.

NOTE: The iBR lever can only be used to command a change in the gate position if the engine is running.

Using the iBR system significantly reduces the stopping distance of this watercraft and can increase its maneuverability as it can be used in a straight line, in a turn, at high or low speeds, or to propel the watercraft in reverse for docking or maneuvering in very close quarters.

Under ideal conditions, experienced operators were consistently able to reduce , the stopping distance of a watercraft equipped with an iBR system by approximately 33%,from an initial speed of 80 km/h (50 MPH).

Limitations

Even when equipped with an iBR system, watercrafts do not have the ability of land based vehicles.

Stopping distance will vary notably depending on initial speed, load, wind, current, water conditions and the amount of braking.

The iBR system has no effect on the rearward motion.

It cannot prevent your watercraft from drifting in current or wind.

⚠ WARNING

- It is important to inform the operator of a watercraft who intends to follow in a convoy formation, of the braking and maneuvering capability of your PWC, what the plume of water indicates, and that a greater distance must be maintained between watercraft.
- Be aware that other boats following or operating in close proximity may not be able to stop as quickly.

iS (intelligent Suspension) (GTX Limited iS 260 Only)

The suspension system of this watercraft is designed so that the occupants sit on what is known as the moving deck. When the suspension system is active, the moving deck is usually in an "up" position. This means the moving deck is raised above the fixed deck sufficiently for the suspension system to absorb the up and down movement of the watercraft as it travels through the water.

The iS system incorporates a function known as DOCK MODE. When activated manually or automatically, DOCK MODE moves the suspension down to lower the center of gravity of the watercraft. This function is useful when transporting the watercraft, operating at slow speed or when O.T.A.S. is activated as it reduces the possibility of overturning.

Limitations

Although the system absorbs partially the vertical forces transferred to the occupants when riding, it cannot eliminate them completely. Sudden jolts can cause the suspension to bottom.

SAFETY EQUIPMENT

Required Safety Equipment

The operator and the passenger(s) must wear an approved Personal Flotation Device (PDF) that is suitable for PWC use.

Operator and passenger(s) should have ready access to shatterproof glasses should riding conditions or personal preference warrant.

Wind, water spray and speed may cause a person's eyes to water and create blurred vision.

As the owner of the watercraft, you are responsible for assuring that all required safety equipment is aboard. You should also consider supplying additional equipment as needed for your safety and that of your passengers. Check state and local regulations about required safety equipment.

Safety equipment required by regulations is mandatory. If local regulations require additional equipment, it must be approved by a competent authority. Minimum requirements include the following:

- Personal flotation devices (PFDs)
- A buoyant heaving line of 15 m (50 ft) minimum
- A watertight flashlight or approved flares
- Signaling device
- Sound producing devices (air horn or whistle).

Recommended Protection Gears

The operator and passenger(s) of PWCs must wear protective gear, including:

- A wet suit bottom, or thick tightly woven and snug fitting clothing that provides equivalent protection. As an example, thin bike shorts would not be appropriate. Severe internal injuries can occur if water is forced into body cavities as a result of falling in the water or being near jet thrust nozzle. Normal swimwear does not adequately protect against forceful entry of water into the lower male or female body opening(s).
- Footwear, gloves, safety goggles or glasses are also recommended. Some type of lightweight, flexible foot protection is recommended. This will help reduce possible injury, should you step on sharp underwater objects.

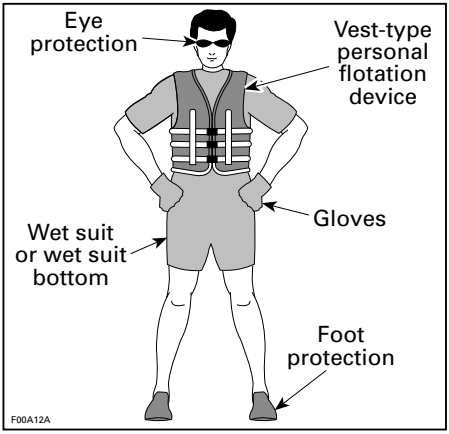

Personal Flotation Devices (PFDs)

Each person on a recreational watercraft must wear a personal flotation device (PFD) at all times. Ensure that these PFDs meet your country regulations.

A PFD provides buoyancy to help keep the head and face above the water, and to help maintain a satisfactory body position while in the water. Body weight and age should be considered when selecting a PFD. The buoyancy provided by the PFD should support your weight in water. The size of the PFD should be appropriate for the wearer. Body weight and chest size are common methods used to size PFDs. It is your responsibility to ensure that you have the proper number and types of PFDs on board to comply with federal and local regulations, and that your passengers know where they are and how to use them.

PFD Types

There are five types of approved PFDs.

PFD Type I, Wearable, has the greatest required buoyancy. Its design allows for turning most unconscious persons in the water from face down position to a vertical or slightly backward, face-up position. It can greatly increase the chances of survival. Type I is most effective for all waters, especially offshore when rescue may be delayed. It is also the most effective in rough waters.

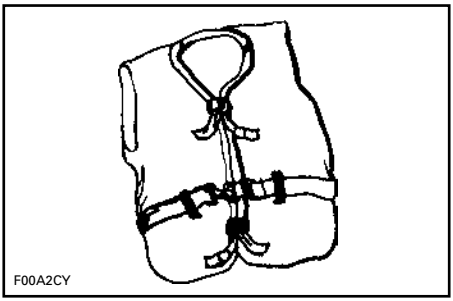

TYPE I — WEARABLE

PFD Type II, Wearable, turns its wearer in the same way as Type I, but not as effectively. The Type II does not turn as many persons under the same conditions as a Type I. You may prefer to use this PFD where there is a probability of quick rescue such as in areas where other people are commonly involved in water activities.

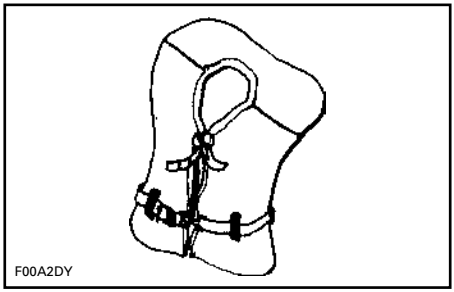

TYPE II — WEARABLE

PFD Type III, Wearable, allows wearers to place themselves in a vertical or slightly backward position. It does not turn the wearer. It maintains the wearer in a vertical or slightly backward position and has no tendency to turn the wearer face down. It has the same buoyancy as a Type II PFD and may be appropriate in areas where other people are commonly involved in water activities.

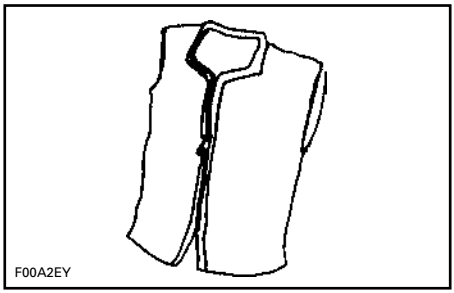

TYPE III — WEARABLE

PFD Type V, Wearable, must be worn. When inflated, it provides buoyancy equivalent to Type I, II or III PFDs. When it is deflated, however, it may not support some people.

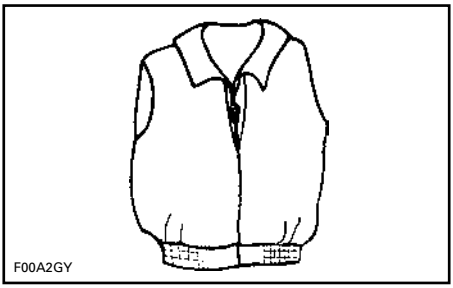

TYPE V — WEARABLE

Helmets

Some Important Considerations

Helmets are designed to offer some degree of protection in case of impacts to the head. In most motorized sports, the benefits of wearing a helmet clearly outweigh the drawbacks. However, in the case of motorized watersports such as riding personal watercraft, this is not necessarily true as there are some particular risks associated with the water.

Benefits

A helmet helps to reduce the risk of injury in case of a head impact against a hard surface such as another craft in the case of a collision. Similarly, a helmet with a chin guard might help prevent injuries to the face, jaw or teeth.

Risks

On the other hand, in some situations when falling off the watercraft, helmets have a tendency to catch the water, like a "bucket", and put severe stresses on the neck or spine. This could result in choking, severe or permanent neck or spine injury or death.

Helmets may also interfere with peripheral vision and hearing, or increase fatigue which, could contribute to increase the risk of a collision.

Weighing the Risks vs Benefits

In order to decide whether or not you should wear a helmet, it is best to consider the particular environment you will be riding in, as well as other factors such as personal experience. Will there be a lot of traffic on the water? What is your riding style?

The Bottom Line

Since each option minimizes some risks, but increases others, before each ride you must decide whether to wear or not wear a helmet based on your particular situation.

If you decide to wear a helmet, you must then decide what type is the most appropriate for the circumstances. Look for helmets that meet DOT or Snell standards, and if possible, choose one designed for motorized watersports.

Additional Recommended Equipment

It is recommended that you acquire additional equipment for safe, enjoyable cruising. This list, which is not all inclusive, includes items you should consider acquiring.

- Local map
- First aid kit
- Tow rope
- Flares
- Mooring cords.

A cellular telephone in a waterproof bag or container has also been found to be beneficial to boaters when in distress or just for contacting someone on shore.

PRACTICE EXERCISES

It is always a good idea to practice and get familiar with all controls, functions and handling characteristics of your watercraft before venturing on the water.

Always secure the tether cord to the engine cut-off switch and the clip to your PFD or a wrist strap.

Where to Practice Exercises

Find a suitable area to practice the exercises. Ensure the area meet the following requirements:

- No traffic
- No obstacles
- No swimmers
- No current
- Ample space to maneuver
- Water depth is adequate.

Practice Exercises

Practice **alone** the following exercises.

Turning

Practice turning in circles in both directions at slow speed. When comfortable with the exercise, increase difficulty by making some figure 8.

When this is mastered, repeat the above exercises but at increased speed.

Stopping Distances

Practice stopping the watercraft in a straight line at various speeds and braking force.

Remember that watercraft speed, load, water conditions, current and wind also affect stopping distances.

Reverse

Practice reverse operation to learn how the watercraft operates in reverse and reacts with steering inputs.

NOTE: Always perform this exercise at slow speeds.

Avoiding an Obstacle

Practice obstacle avoidance (choose a virtual point on the water) by steering watercraft and maintaining throttle.

Repeat exercise, but this time release throttle while turning.

NOTE: With this exercise, you will learn that you need throttle to steer the watercraft in a different direction.

Docking

Practice docking using the throttle, iBR lever and steering to become familiar with the response of the PWC and to develop good control skills.

NOTE: Remember that steering direction is reversed when backing.

Slow Speed Mode, Ski Mode and Cruise Mode

If your watercraft has any of these modes, it is also important to understand their operation and to become familiar with these features prior to using them on a ride with other people.

⚠ WARNING

The ski and the cruise modes are not an automatic pilot; they will not drive the watercraft for you.

Important Factors Not to Neglect

In addition, always remember that the following conditions have a direct impact on how your watercraft will behave and respond to different inputs:

- Loads
- Currents
- Wind
- Water conditions.

Make sure to be alert to these conditions, and adapt accordingly. If possible, practice further in these conditions.

For delicate maneuvers, the best advice is always to try to reduce your speed to a minimum.

NAVIGATION RULES

Operating Rules

Operating a watercraft can be compared with driving on unmarked highways and roads. To prevent collisions or avoid other boaters, a system of operating rules must be followed. It's not only common sense... it's the law!

Generally keep to your right and safely avoid collisions by keeping a safe distance from other watercrafts, boats, people and objects.

The following illustration identifies different parts of the boat that are used as directional reference points, the bow being the front of the boat. The port side of boat (left side) is visually identifiable by a RED light off the bow, and the starboard side (right side) by a GREEN light.

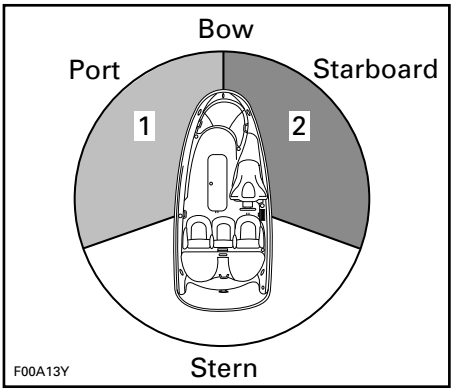

TYPICAL - DIRECTIONAL REFERENCE POINTS
1. *RED light*
2. *GREEN light (yield zone)*

Crossing

Give the right of way to a watercraft **ahead and to your right**. Never cross in front of a boat, you should see his RED light, he should see your GREEN light (he has the right of way).

Personal watercrafts (PWC) do not have these colored lights, but the rule still applies.

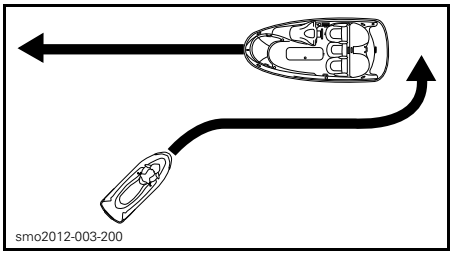

TYPICAL

Like a street traffic light, if you see a RED light, STOP, give the right of way. The other boat is to your right and **it** has the right of way.

If you see a GREEN light, **pass with caution**. The other boat is to your left, you have the right of way.

Meeting Head-On

Keep right.

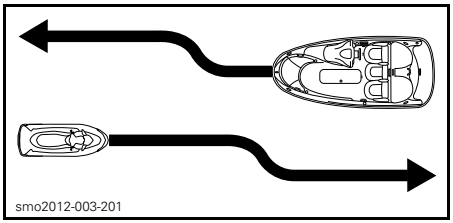

TYPICAL

Passing

Give the right of way to other crafts and keep clear.

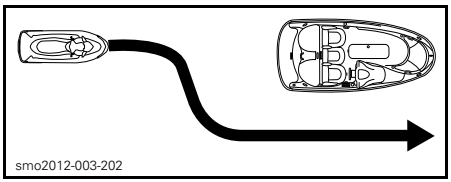

TYPICAL

Navigation System

Navigational aids, such as signs or buoys, can assist you in identifying safe waters. Buoys will indicate whether you should keep to the right (starboard) or to the left (port) of the

buoy, or to which channel you can continue. They may also indicate whether you are entering a restricted or controlled area such as a no wake or low speed zone. They may also indicate hazards or pertinent boating information. Markers may be located on shore or on the water. They can also indicate speed limits, no power craft or boating, anchorage and other useful information. (The shape of each type of marker will provide assistance).

Make sure you know and understand the navigation system applicable to the waterways where you intend to use the watercraft.

Collision Avoidance

Do not release the throttle when trying to steer away from an obstacle. Engine power and jet pump thrust is required to steer the watercraft.

Always keep a constant lookout for other water users, other boats or objects, especially when turning. Be alert for conditions that may limit your visibility or block your vision of others.

Respect the rights of other recreationists and/or bystanders and always keep a safe distance from all other watercrafts, boats, people and objects.

Do not wake or wave jump, ride the surf line or attempt to spray or splash others with your watercraft. You may misjudge the ability of the watercraft or your own riding skills and strike a boat or person.

This watercraft has the capability of turning more sharply than other boats, however, unless in an emergency, do not negotiate sharp, high speed turns. Such maneuvers make it hard for others to avoid you or understand where you are going. Also, you and/or your passenger(s) could be thrown from the watercraft.

Unlike most other watercrafts, this PWC has a braking system (iBR).

When operating an iBR equipped watercraft, be aware that other boats following or operating in close proximity may not be able to stop as quickly.

When at speed and the brake is first applied, a plume of water will shoot up in the air behind the watercraft indicating a braking manoeuvre.

It is important to inform the operator of a watercraft who intends to follow in a convoy formation of the braking and maneuvering capability of your PWC, what the plume of water indicates, and that a greater distance should be maintained between both of you.

Stopping distance will vary depending on initial speed, load, wind and water conditions.

Although the preferable manoeuvre to avoid an obstacle is to steer away while applying throttle, the iBR can also be used by fully braking and turning in the direction to avoid the obstacle.

FUELING

Fueling Procedure

⚠ WARNING

Fuel is flammable and explosive under certain conditions. Always work in a well ventilated area. Do not smoke or allow open flames or sparks in the vicinity.

Turn off engine.

⚠ WARNING

Always stop the engine before refueling.

Do not allow anyone to remain on the watercraft.

Tie watercraft securely to the fueling pier.

Have a fire extinguisher close at hand.

Lightly press down on the fuel cap with your LH hand as you pull up on the latch with your fingers to release it. The cap will pop open as it is pushed open by spring pressure.

sdd2009-001-054_a

TYPICAL - FUEL TANK CAP LOCATION

⚠ WARNING

Fuel tank may be pressurized, place one hand over the fuel cap when releasing the cap retaining latch.

Insert the gas pump spout into the filler neck and fill the fuel tank.

⚠ WARNING

To prevent fuel back-flow, fill tank slowly so the air can escape from the fuel tank.

Stop filling immediately after the release of the gas pump nozzle handle and wait a moment before removing the spout. Do not retract the gas pump nozzle to put more fuel in fuel tank.

⚠ WARNING

Do not overfill or top off the fuel tank and leave the watercraft in the sun. As temperature increases, fuel expands and may overflow.

Close the fuel tank cap and ensure it is properly latched.

⚠ WARNING

Always wipe off any fuel spillage from the watercraft.

After refueling always open the seat, remove the ventilation box (as applicable), and ensure there is no gasoline vapor odor inside the engine compartment.

⚠ WARNING

Do not start watercraft if gasoline or gasoline vapor odor is present.

Fuel Requirements

NOTICE **Always use fresh gasoline. Gasoline will oxidize; the result is loss of octane, volatile compounds, and the production of gum and varnish deposits which can damage the fuel system.**

Alcohol fuel blending varies by country and region. Your vehicle has been designed to operate using the recommended fuels, however, be aware of the following:

- Use of fuel containing alcohol above the percentage specified by government regulations is not recommended and can result in the following problems in the fuel system components:
  - Starting and operating difficulties.
  - Deterioration of rubber or plastic parts.
  - Corrosion of metal parts.
  - Damage to internal engine parts.
- Inspect frequently for the presence of fuel leaks or other fuel system abnormalities if you suspect the presence of alcohol in gasoline exceeds the current government regulations.
- Alcohol blended fuels attract and hold moisture which may lead to fuel phase separation and can result in engine performance problems or engine damage.

Recommended Fuel

GTX and GTX S Models

Use common unleaded gasoline with an AKI (RON+MON)/2 octane rating of 87, or an RON octane rating of 91.

All Models except GTX and GTX S

Use premium unleaded gasoline with an AKI (RON+MON)/2 octane rating of 91, or an RON octane rating of 95.

All Models

NOTICE **Never experiment with other fuels. Engine or fuel system damages may occur with the use of an inadequate fuel.**

NOTICE **Do NOT use fuel from fuel pumps labeled E85.**

Use of fuel labeled E15 is prohibited by U.S. EPA Regulations.

TRAILERING INFORMATION

NOTICE The span of the trailer wood bunks including bunk width should be adjusted to provide support throughout the full length of the hull. The ends of both trailer wood bunks should not exceed the length of the watercraft.

Ensure the trailer wheels are positioned so that the center of gravity of the watercraft is slightly ahead of the wheels to properly support the weight of the watercraft.

⚠ WARNING

Never tip this watercraft on end for transporting. We recommend that you carry the watercraft in its normal operating position.

Check the applicable laws and regulations in your area concerning towing a trailer, especially for the following items:

- Brake system
- Tow vehicle weight
- Mirrors.

Take the following precautions when towing the watercraft:

- Respect tow vehicle maximum weight capacity and the tongue weight capacity as recommended by manufacturer.
- Tie the watercraft to both front and rear (bow/stern) eyelets so that it is firmly secured on the trailer. Use additional tie-downs if necessary.
- Ensure fuel tank cap, front storage compartment cover, glove box cover, boarding platform and seat are properly latched.
- Observe trailering safety precautions.

NOTICE Do not route ropes or tie-downs over the seat or grab handle as they could be permanently damaged. Wrap ropes or tie-downs with rags or similar protectors where they can come into contact with the watercraft body.

GTX Limited and GTX Limited iS Models

⚠ WARNING

Ensure the watercraft moving deck is down in the DOCK MODE position before trailering. This will lower the center of gravity and improve trailer stability.

All Models

⚠ WARNING

Make sure seat is securely latched prior to trailering.

A Sea-Doo cover can protect the watercraft, particularly when driving on dirt roads, to prevent dirt entry through the air inlet openings.

⚠ WARNING

When trailering the watercraft, NEVER leave any equipment on the watercraft.

WAKE™ Pro Model

⚠ WARNING

NEVER leave a wakeboard installed on the rack. Otherwise, wake board fin(s) could cause injury to bystanders or wakeboard could fly off on the road.

⚠ WARNING

Bungee cords are under tension and could spring back and whip someone when released. Use caution.

NOTE: When trailering 2 watercrafts, it may be necessary to remove the inner wakeboard rack.

IMPORTANT ON-PRODUCT LABELS

Watercraft Safety Labels

These labels are affixed to the vehicle for the safety of the operator, passenger (2-UP) or bystanders

The labels illustrated on the following pages are on your watercraft. If missing or damaged, they can be replaced free of charge. See an authorized Sea-Doo dealer.

Please read the following labels carefully before operating this watercraft.

NOTE: The first illustration of the watercraft indicates the approximate locations of the various labels. A dotted line indicates that the label is not on the outer surface, and that the seat or a cover of some type must be opened to see the label.

NOTE: In the event of any discrepancy between this guide and the vehicle, the safety labels on the vehicle have precedence over the labels in this guide.

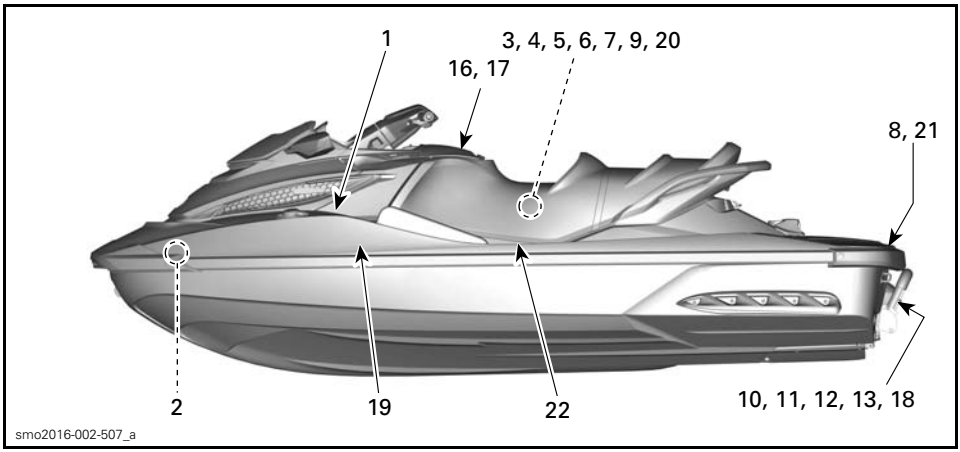

TYPICAL - GTX LIMITED

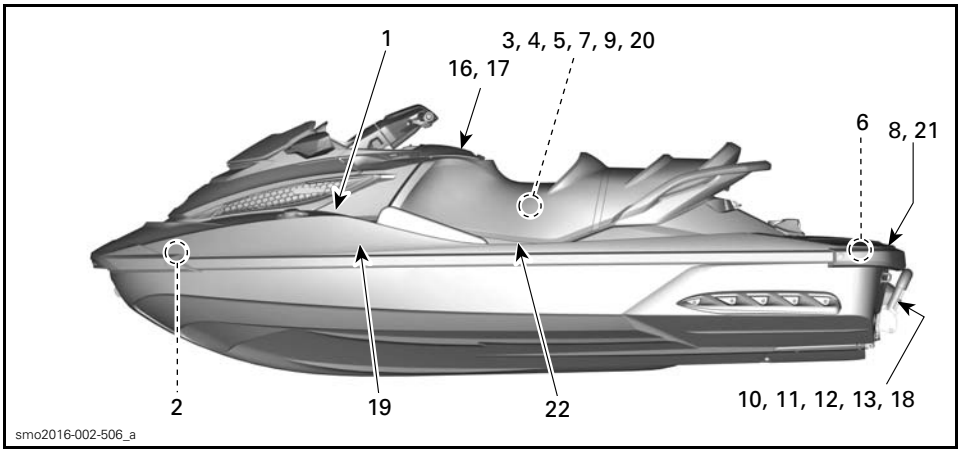

TYPICAL - GTX LIMITED iS

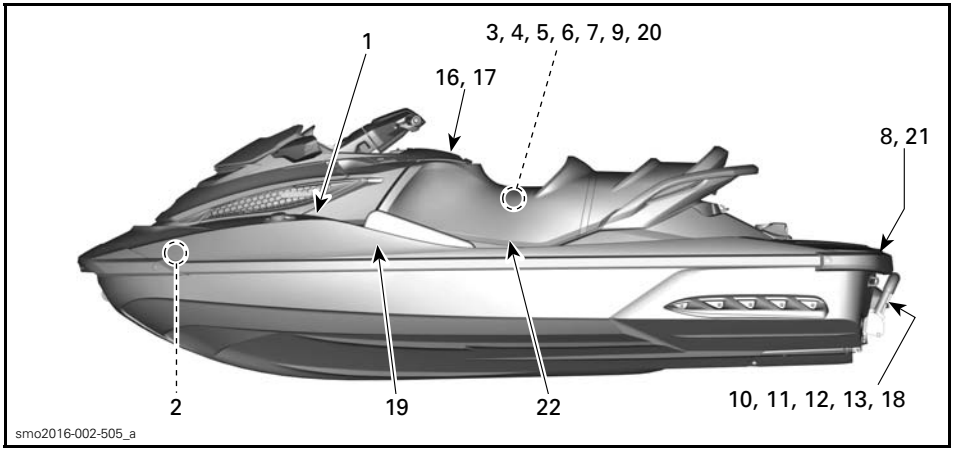

TYPICAL - GTX LIMITED 300

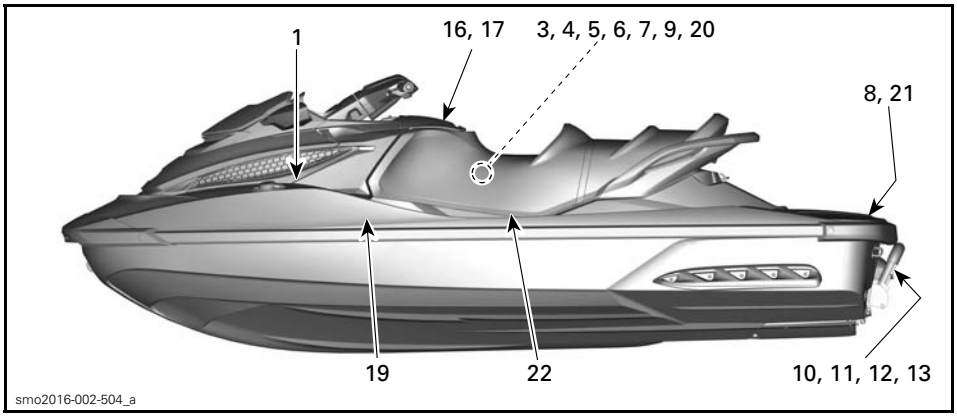

TYPICAL - GTX

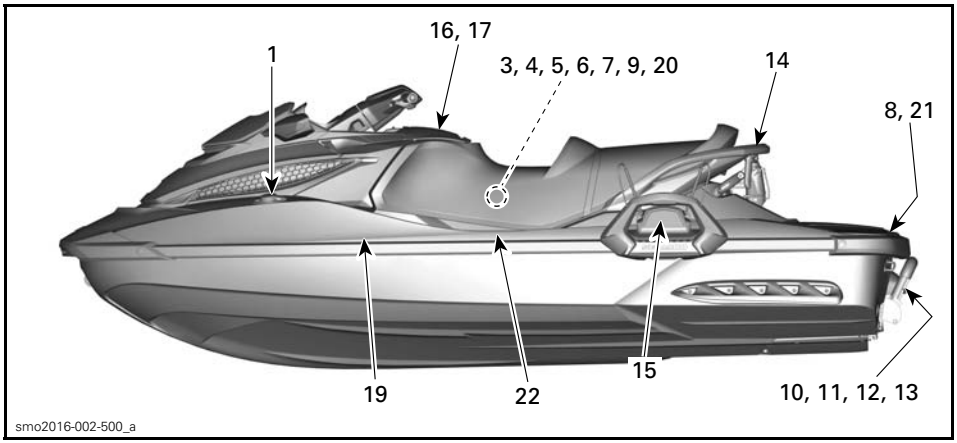

WAKE PRO

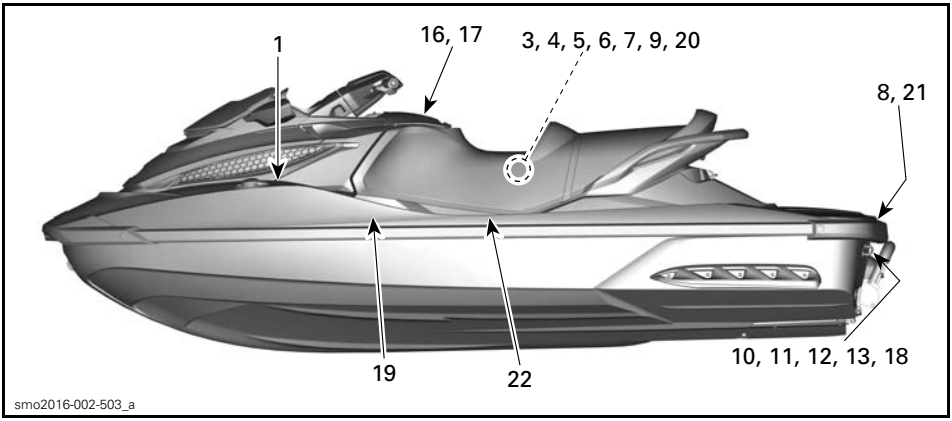

RXT 260

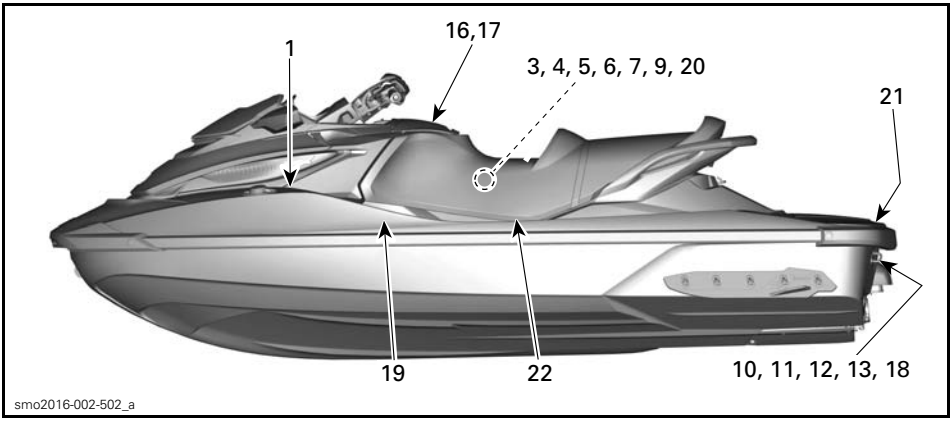

RXT-X 300

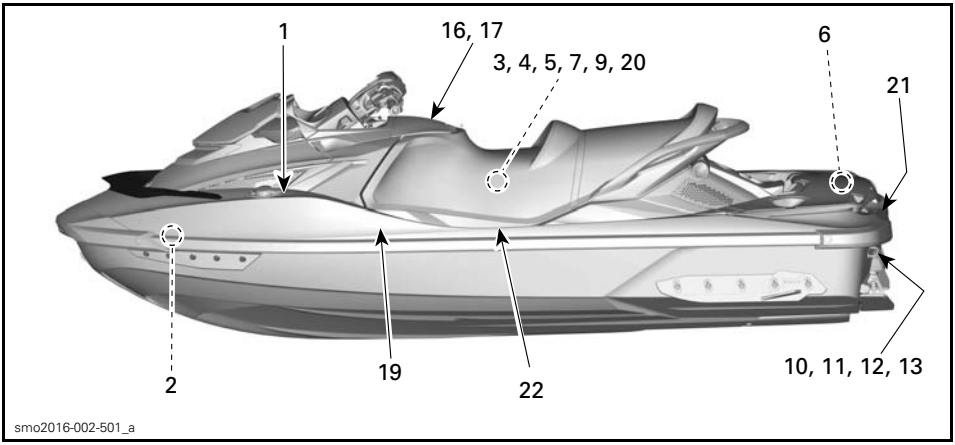

RXT-X aS

WARNING

- After refueling, always open the seat and the ventilation box (if applicable) to ensure there is no gasoline vapor odor inside the engine compartment.
- Gasoline vapor may cause fire or explosion.
- Do not overfill gas tank.
- Keep the craft away from open flames and sparks.
- Do not start watercraft if liquid gasoline or gasoline vapor odor is present.
- Always replace ventilation box (if applicable) and close seat before starting.

AVERTISSEMENT

- Après avoir fait le plein, toujours ouvrir le siège et la boîte de ventilation (si applicable) afin de s'assurer qu'il n'y a pas d'émanation d'essence dans le compartiment moteur.
- Les vapeurs d'essence peuvent provoquer un incendie ou une explosion.
- Éviter de trop remplir le réservoire d'essence.
- Garder la motomarine à l'écart des flammes et des étincelles.
- Ne pas démarrer la motomarine en présence d'essence liquide ou d'émanation d'essence.
- Toujours remettre la boîte de ventillation (si applicable) en place et refermer le siège avant de démarrer la motomarine.

219903495

NOTICE

Recommended for supercharged engine: premium unleaded gasoline 91 pump octane or higher. Minimum required: unleaded gasoline 87 pump octane.

AVIS

Recommandé pour moteur suralimenté: essence sans plomb 91 octane ou plus. Minimum requis: essence sans plomb 87 octane.

219903495

LABEL 1: TYPICAL

smo2009-002-103_a

LABEL 2: TYPICAL

CAUTION

ENGINE OIL AND CERTAIN COMPONENTS IN THE ENGINE COMPARTMENT MAY BE HOT. DIRECT CONTACT MAY RESULT IN SKIN BURN.

CHECKING ENGINE OIL LEVEL

- Make sure engine is at operating temperature. (Never let engine run out of water without the flush kit connected as it may damage the engine)
- Vehicle must be level to perform verification.
- Let engine running at idle for at least 30 seconds.
- Stop engine and wait at least 30 seconds.
- Remove the ventilation box to access engine compartment.
- Check oil level using the dipstick.

219903084

219903084

LABEL 3: iS MODELS

CAUTION

ENGINE OIL AND CERTAIN COMPONENTS IN THE ENGINE COMPARTMENT MAY BE HOT. DIRECT CONTACT MAY RESULT IN SKIN BURN.

CHECKING ENGINE OIL LEVEL

- Make sure engine is at operating temperature. (Never let engine run out of water without the flush kit connected as it may damage the engine)
- Vehicle must be level to perform verification.
- Let engine running at idle for at least 30 seconds.
- Stop engine and wait at least 30 seconds.
- Remove the ventilation box to access engine compartment.
- Check oil level using the dipstick.

219903184A

219903184

LABEL 3: FIXED DECK MODELS

WARNING

EACH TIME A GASOLINE VAPOR ODOR CHECK IS PERFORMED

- Always remove this ventilation box to access the engine compartment.
- Gasoline vapor may cause fire or explosion.
- Do not start watercraft if liquid gasoline or gasoline vapor odor is present.
- Always replace ventilation box and close seat before starting.

smo2009-002-105_aen

LABEL 4: TYPICAL

⚠ WARNING / AVERTISSEMENT

When disconnecting coil from sparkplug, always disconnect coil from main harness first. Never check for engine ignition spark from an open coil and/or sparkplug in the engine compartment as spark may cause fuel vapor to ignite.

Lorsque vous déconnectez la bobine d'allumage de la bougie, toujours déconnecter la bobine d'allumage du harnais principal en premier. Ne jamais vérifier si le circuit d'allumage du moteur produit une étincelle en utilisant la bobine d'allumage et/ou la bougie dans le compartiment moteur car une étincelle pourrait entraîner l'allumage des vapeur d'essence.

F18L0NY

LABEL 5: TYPICAL

NOTICE

- **To comply with noise regulations, this engine is designed to operate with an air intake silencer.**
- **Operation without air intake silencer or with one not properly installed may cause engine damage.**

219903177A

219903177

LABEL 7: TYPICAL

⚠ WARNING

- **Remove battery from boat before charging.**
- **Do not overcharge battery.**
- **Improper charging of battery can cause explosion.**

219903082B

219903082

LABEL 6: TYPICAL

⚠ WARNING

AVOID SERIOUS INJURY OR DEATH:

- Engine must be turned off before re-boarding.
- Keep away from propulsion system and intake grate.

WHEN RE-BOARDING:

- Re-board one person at a time.
- Stay centered to keep balance.

Never use the boarding step (if so equipped) for pulling, towing, jumping or boarding a PWC that is out of water or any purpose for which it was not designed.

219904252

219904252

LABEL 8 - ON FIXED DECK AND aS MODELS

⚠ WARNING

AVOID SERIOUS INJURY OR DEATH:

• Engine must be turned off before re-boarding. • Keep away from propulsion system and intake grate.

WHEN RE-BOARDING:

• Re-board one person at a time. • Stay centered to keep balance.

Never use the boarding step (if so equipped) for pulling, towing, jumping or boarding a PWC that is out of water or any purpose for which it was not designed.

219904254

219904254

LABEL 8 - ON S AND iS MODELS

F00A2TY

LABEL 9: TYPICAL

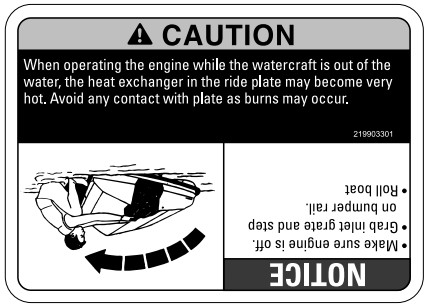

219903301

LABEL 10: TYPICAL

smo2009-002-109_a

LABEL 11: TYPICAL

smo2009-002-110_aen

LABEL 12: TYPICAL

smo2009-002-111_a

LABEL 13: TYPICAL

219903137

LABEL 14: TYPICAL

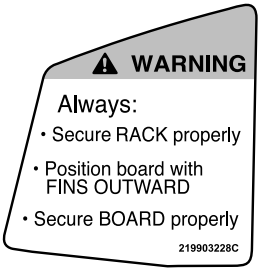

219903228

LABEL 15: TYPICAL

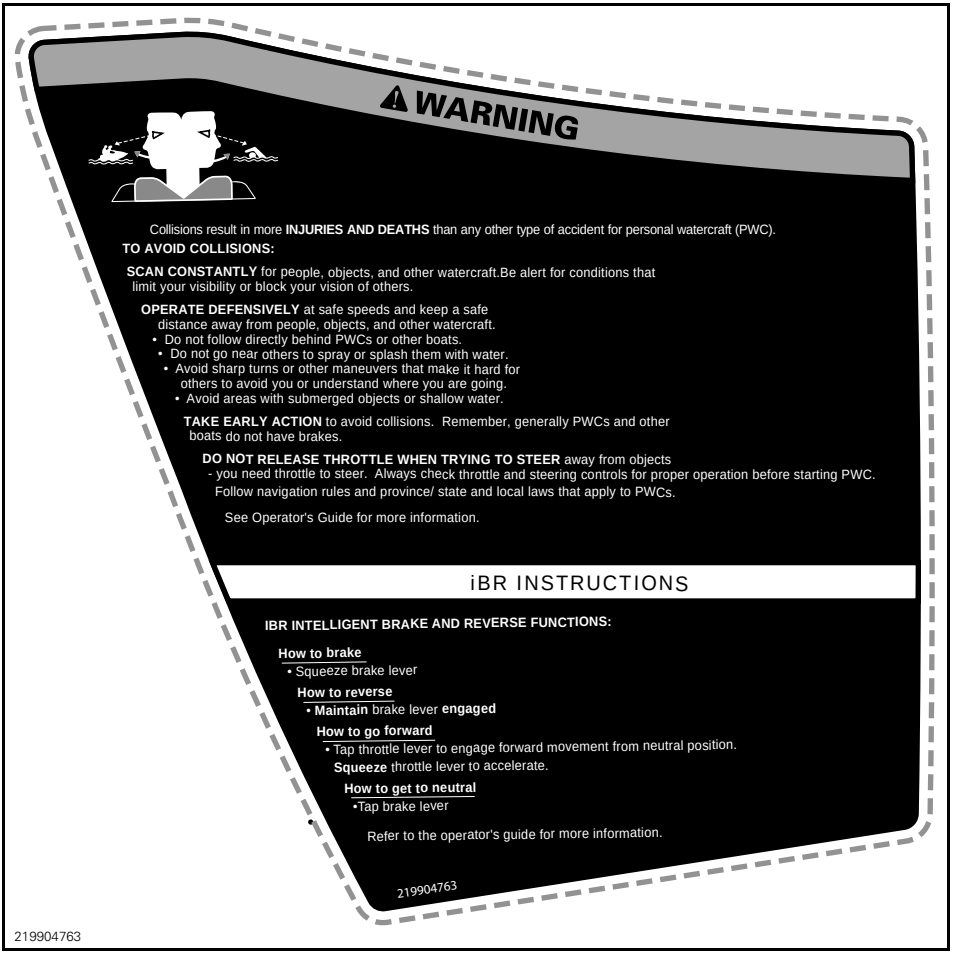

LABEL 16: GTX, GTX LIMITED, LIMITED-iS, WAKE AND RXT MODELS

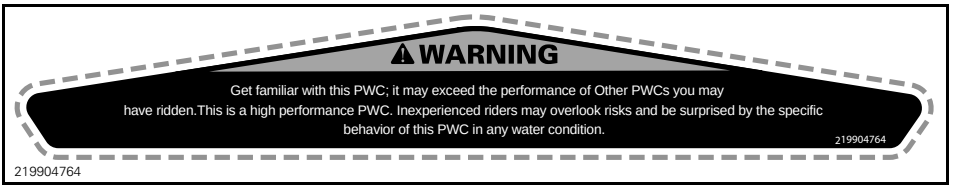

LABEL 16: RXT-X AND RXT-X AS MODELS

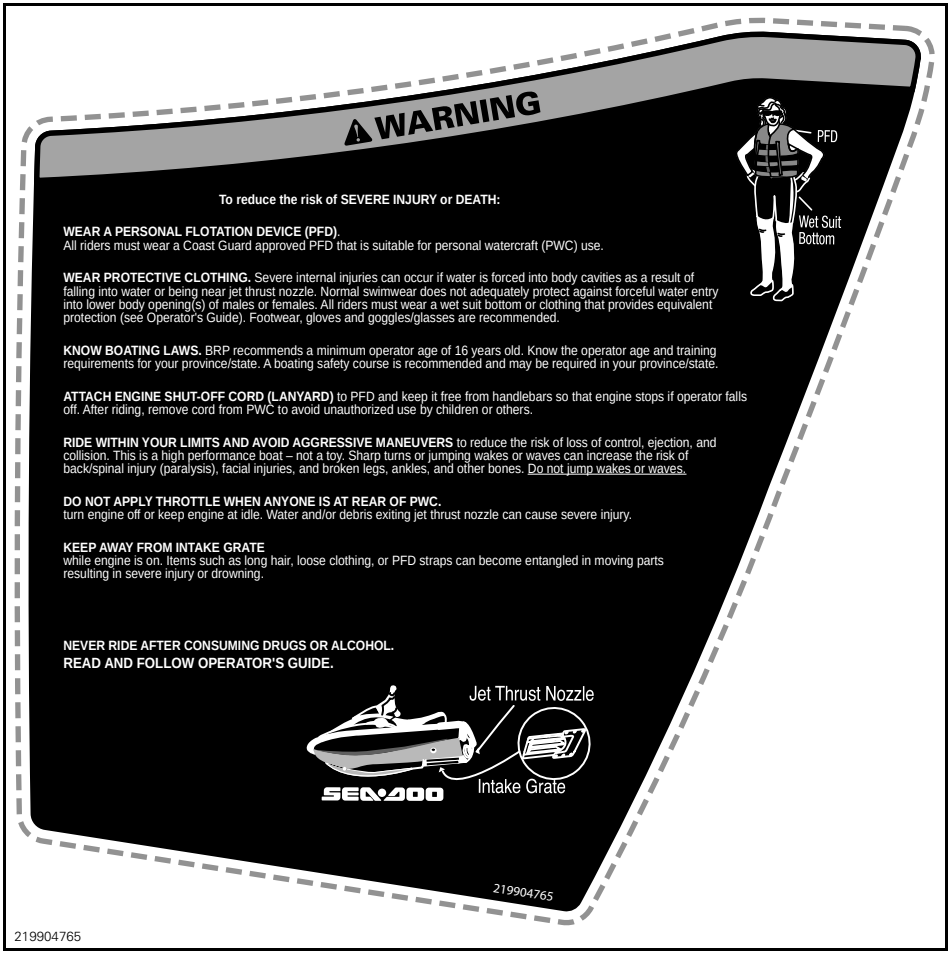

LABEL 17

LABEL 18 - 260 ENGINE ONLY

Compliance Labels

LABEL 19

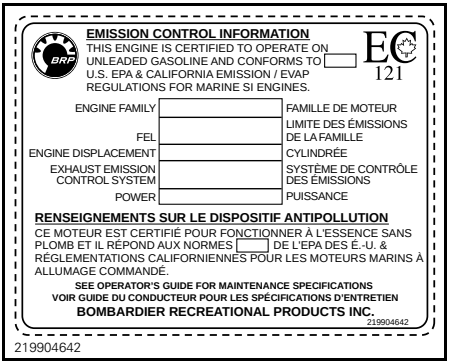

LABEL 20 - INSIDE NORTH AMERICA ONLY

LABEL 21 - TYPICAL

Models with Suspension

The EPA compliance label is located on the front ventilation box riser.

It can be seen by opening the front cover, removing the front storage bin and looking aft.

TYPICAL
1. *Compliance label*
2. *Ventilation box*
3. *Riser*

Models Without Suspension

On these models, the EPA compliance label is located on the RH side of a deck riser just below the glove box.

To view the label, open the seat and look to the right of the seat hinge near the top of the riser.

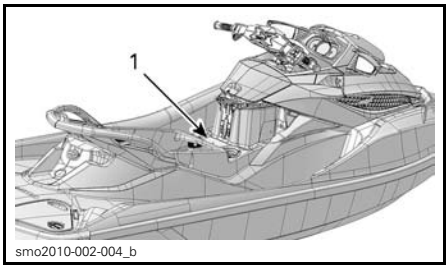

TYPICAL - GTX155, RXT-X AND WAKE PRO MODELS
1. *EPA label location*

Watercraft Inside North-America

GTX S, GTX LTD iS, and RXT-X aS

LABEL 22 - CANADIAN COMPLIANCE NOTICE (CAN MODELS ONLY)

GTX, GTX LTD, RXT, RXT-X, and Wake

LABEL 22 - CANADIAN COMPLIANCE NOTICE (CAN MODELS ONLY)

Watercraft Outside North America

GTX S, GTX LTD iS, and RXT-X aS

LABEL 22 - TYPICAL (WATERCRAFT OUTSIDE NORTH AMERICA)

GTX, GTX LTD, RXT, RXT-X, and Wake

LABEL 22 - TYPICAL (WATERCRAFT OUTSIDE NORTH AMERICA)

Australian Models Only

LABEL 23 - ALL MODELS EXCEPT RXT-X aS AND GTX LIMITED iS

LABEL 23 - RXT-X aS AND GTX LIMITED iS

PRE-RIDE INSPECTION

We encourage you to have an Annual Safety Inspection of your vehicle. Please contact an authorized BRP dealer for further details. Though not required, it is recommended that an authorized BRP dealer performs the preseason preparation of your vehicle. Each visit to your authorized BRP dealer is a great opportunity for your dealer to verify if your vehicle is included in any safety campaign. We also urge you to visit your authorized BRP dealer in a timely manner if you become aware of any safety related campaigns.

⚠ WARNING

Perform a pre-ride inspection before each ride to detect potential problems during operation. The pre-ride inspection can help you monitor wear and deterioration before they become a problem. Correct any problems that you discover to reduce the risk of a breakdown or crash.

Before performing the pre-ride inspection, read and understand the *CONTROLS* section.

What to Do Before Launching the Watercraft

⚠ WARNING

Engine should be off and the tether cord cap should always be removed from the engine cut-off switch prior to verifying any of the following points. Only start watercraft once all items have been checked and operate properly.

NOTE: Before starting the engine and taking off, it is recommended to shake vertically the rear of the watercraft to shake away any sand that may have accumulated near the propulsion and reverse systems.

Check the items listed in the following table before launching the watercraft.

ITEM	OPERATION	✓
Hull	Inspect.	
Jet pump water intake	Inspect/clean.	
Drain plugs	Tighten.	
Fuel tank	Refill.	
Engine compartment	Check for any visible fluid leaks and gasoline vapor odor.	
Engine oil level	Check/refill.	
Engine coolant level	Check/refill.	
Steering system	Check operation.	
Throttle lever	Check operation.	
iBR lever	Check operation.	

ITEM	OPERATION	✓
Intelligent Suspension (iS) (GTX Limited iS 260 only)	Check operation.	
Front storage compartment cover, boarding platform and seat	Ensure they are closed and latched.	
Self-contained removable storage bin	Ensure it is installed on watercraft and properly closed and latched.	
Wakeboard rack (WAKE Pro model)	– Ensure rack is properly installed and secured. – Make sure bungee cords are in good condition. – Ensure wakeboard is correctly installed in rack and secured.	
Ski/wakeboard post (WAKE Pro model)	Inspect and check operation.	
Engine START/STOP button	Check operation.	
Engine cut-off switch	Check operation.	

Hull

Inspect hull for cracks and other damages.

Jet Pump Water Intake

Remove weeds, shells, debris or anything else that could restrict the flow of water and damage the propulsion unit. Clean as necessary. If any obstruction cannot be removed, refer to an authorized Sea-Doo dealer for servicing.

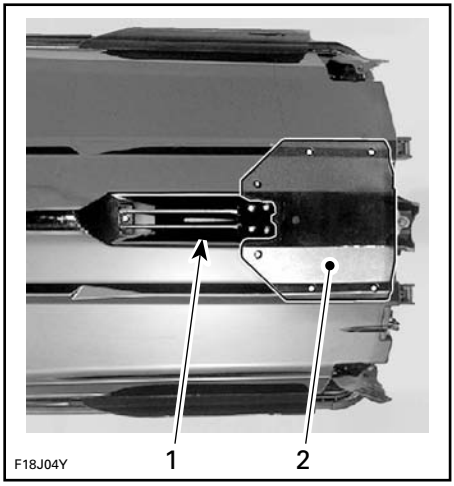

TYPICAL — INSPECT THESE AREAS
1. Water intake
2. Ride plate

Drain Plugs

Secure bilge drain plugs.

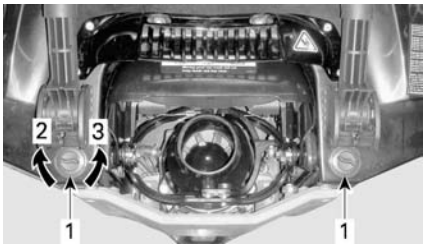

smo2009-002-135_a

TYPICAL - BILGE DRAIN PLUG LOCATIONS
1. *Bilge drain plugs*
2. *Tighten*
3. *Untighten*

⚠ WARNING

Ensure bilge drain plugs are properly secured prior to launching the watercraft in water.

Fuel Tank

Fill the fuel tank.

⚠ WARNING

Strictly adhere to instructions detailed in *FUELING PROCEDURE*.

Engine Compartment

Inspect the engine compartment for fuel vapor odor.

⚠ WARNING

Should any leak or gasoline odor be present, do not apply electrical power or start the engine. You should seek service from an authorized Sea-Doo dealer, repair shop, or person of your own choosing for maintenance, repair, or replacement. Please refer to the *US EPA EMISSIONS-RELATED WARRANTY* contained herein for information about warranty claims.

To access the engine compartment, open the seat.

Models with Suspension

Also remove the ventilation box by depressing the 3 locking tabs and lifting it off the deck extension.

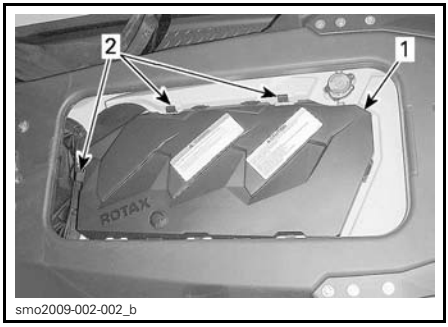

smo2009-002-002_b

1. *Ventilation box*
2. *Locking tabs*

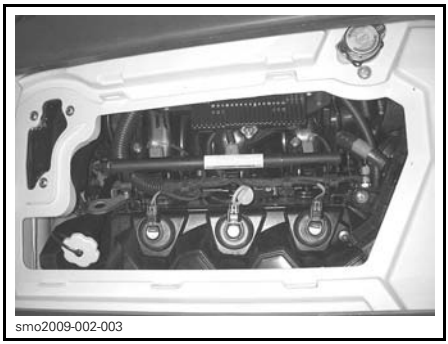
smo2009-002-003

VENTILATION BOX REMOVED

Engine Oil

Ensure oil level is within specification as described in *MAINTENANCE PROCEDURES* section.

Engine Coolant

Ensure coolant level is within specification as described in *MAINTENANCE PROCEDURES* section.

All Models Except iS

Check for coolant leaks on engine, in bilge and from ride plate.

CAUTION When operating the engine with the watercraft out of the water, the engine and heat exchanger in the ride plate may become very hot. Avoid any contact with hot engine parts and the ride plate as burns may occur.

Steering System

Assisted by another person, check steering operation for free movement.

When the handlebar is horizontal, the jet pump nozzle should be in the straight ahead position. Ensure the jet pump nozzle pivots easily and in the same direction as the handlebar (e.g.: when handlebar is turned to the left, the nozzle opening must point towards the LH side of watercraft).

WARNING

Check handlebar and corresponding steering nozzle operation before starting. Never turn handlebar while someone is near the rear of the watercraft. Keep away from steering moving parts (nozzle, iBR gate, linkages etc.).

Throttle Lever

Check the Electronic Throttle Control lever (ETC) for free and smooth operation. It should return to its initial position immediately after it is released.

WARNING

Check throttle lever operation before starting the engine. If any friction is felt in the throttle lever, refer to an authorized Sea-Doo dealer.

iBR Lever

Check the iBR lever for free and smooth operation. It should return to its initial position immediately after it is released.

WARNING

Check iBR lever operation before starting the engine. If any friction is felt in the iBR lever, refer to an authorized Sea-Doo dealer.

iS Suspension (GTX Limited iS 260 only)

1. Press briefly the START/STOP button to wake-up the ECM.
2. Switch to manual suspension mode. Refer to *IS (INTELLIGENT SUSPENSION) (GTX LIMITED IS)*.

Storage Compartments, Boarding Platform and Seat

Ensure all required safety and survival equipment and any additional cargo is properly stored in the storage bins provided.

Ensure the self-contained storage bin cover, front cover, glove box, boarding platform, access panels, and seat are closed and latched.

WARNING

Ensure the seat, boarding platform, access panels, and all storage compartment covers are securely latched.

Models with Suspension

Ensure there are no items of cargo, or other material, between the moving deck and fixed deck.

WARNING

Do not store cargo or material of any type in the space between the moving and fixed deck, or near the rear suspension control arm. These areas must remain free of all obstructions to permit free movement of the deck and any water which may accumulate in the foot well areas. Use only provide storage compartments.

Wakeboard Rack (WAKE Pro model)

⚠ WARNING

Ensure wakeboard rack is properly secured to watercraft body, and that the wakeboard is properly positioned and secured to the rack prior to using watercraft. Ensure wakeboard retaining straps are in good condition.

Ski/Wakeboard Post (WAKE Pro model)

Make sure ski/wakeboard post is fully extended and locked before use.

Completely retract and lock when not used.

⚠ WARNING

Use caution with skier/wakeboarder in tow as tow rope may backlash to watercraft when released. Never perform a sharp turn when towing a skier, wakeboarder or any toy. Always store tow rope when not in use.

NOTICE **The ski/wakeboard post is designed for towing a skier or wakeboarder with a maximum gross weight of 114 kg (250 lb).**

Engine Cut-Off Switch and Engine START/STOP Button

Press the start button once without installing the tether cordon the engine cut-off switch.

Install the tether cord cap on the engine cut-off switch.

Press the START/STOP button to start the engine, then stop it by pressing the START/STOP button a second time.

NOTE: To allow engine starting, the tether cord cap must be properly installed on the engine cut-off switch within 5 seconds of pressing the START/STOP button.

Restart the engine, then stop it by removing the tether cord from the engine cut-off switch.

⚠ WARNING

Should the tether cord cap be loose or fail to remain on the engine cut-off switch, replace the tether cord immediately in order to avoid unsafe use. If removing the tether cord cap from the engine cut-off switch or pressing the START/STOP button does not stop the engine, do not use the watercraft. See your authorized Sea-Doo dealer.

What to Do After Launching the Watercraft

Check the items listed in the following table after launching the watercraft and before going for a ride.

ITEM	OPERATION	✓
Information Center	Check operation.	
Intelligent Brake and Reverse System (iBR)	Check operation.	
Variable Trim System (VTS)	Check operation.	

Information Center (Gauge)

1. Press START/STOP button and install tether cord on the engine cut-off switch.
2. As the information center cycles through its self-test function, ensure all indications come on.

⚠ WARNING

Always attach the tether cord clip to your PFD or to the wrist (wrist strap required).

iBR System

NOTICE **Ensure there is sufficient space ahead and behind watercraft to safely carry out the iBR system test to avoid a collision. Watercraft will move during test.**

1. Remove the moorings securing the watercraft to the dock.
2. Start the engine and ensure the watercraft does not move.
3. On the left handlebar, depress the iBR lever completely in, the watercraft should move slowly backwards.
4. Release the iBR lever, there should not be any reverse thrust.

⚠ WARNING

Always ensure proper iBR system operation before taking the watercraft out for a ride.

Variable Trim System (VTS)

With the engine running in forward thrust, use the VTS™ system to move the jet pump nozzle up, and then down alternately to check VTS operation. Confirm the VTS position indicator movement in the information center.

Also test the VTS preset trim positions (if equipped).

This page is intentionally blank

WATERCRAFT INFORMATION

NOTE: Some vehicle safety labels are not shown on illustrations. For information on vehicle safety labels, refer to *WATERCRAFT SAFETY LABELS* subsection.

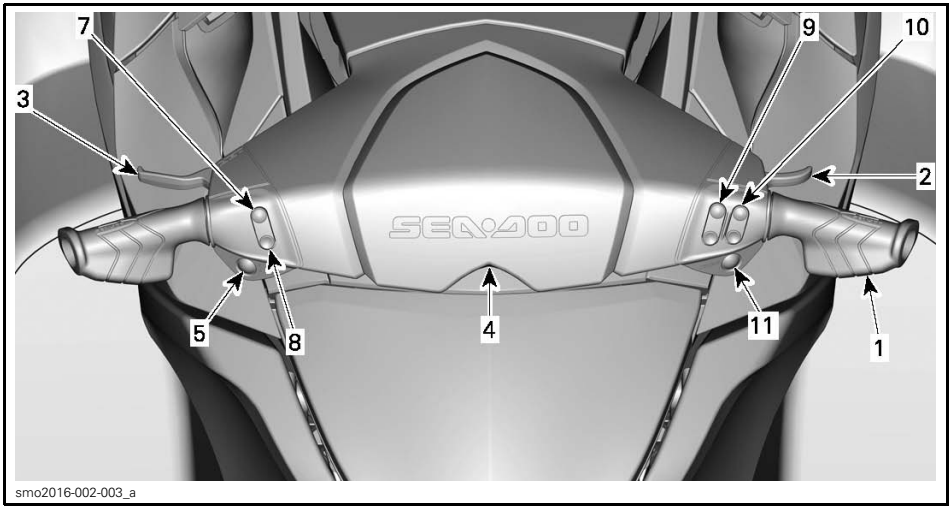

GTX 155/GTS S 155

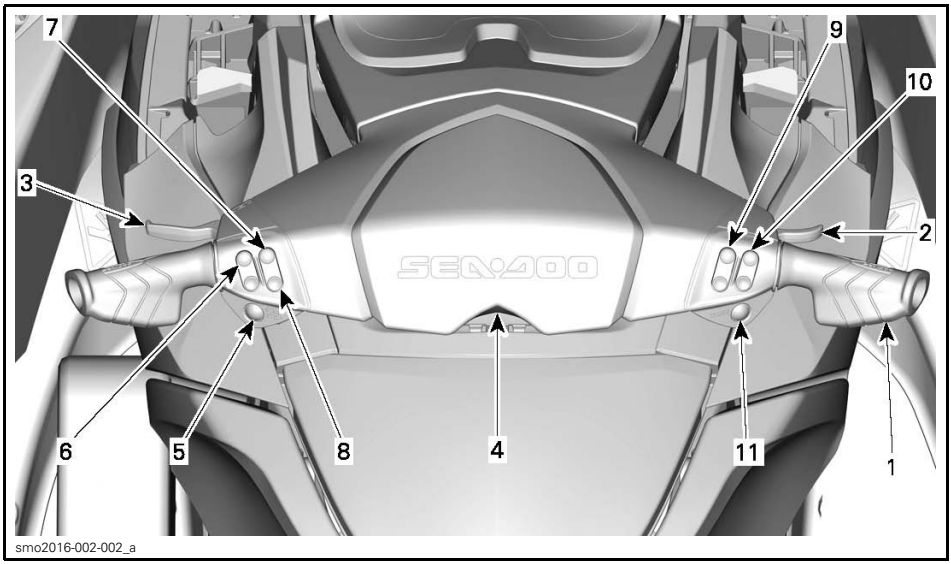

GTX LIMITED/GTX iS LIMITED/RXT/WAKE PRO

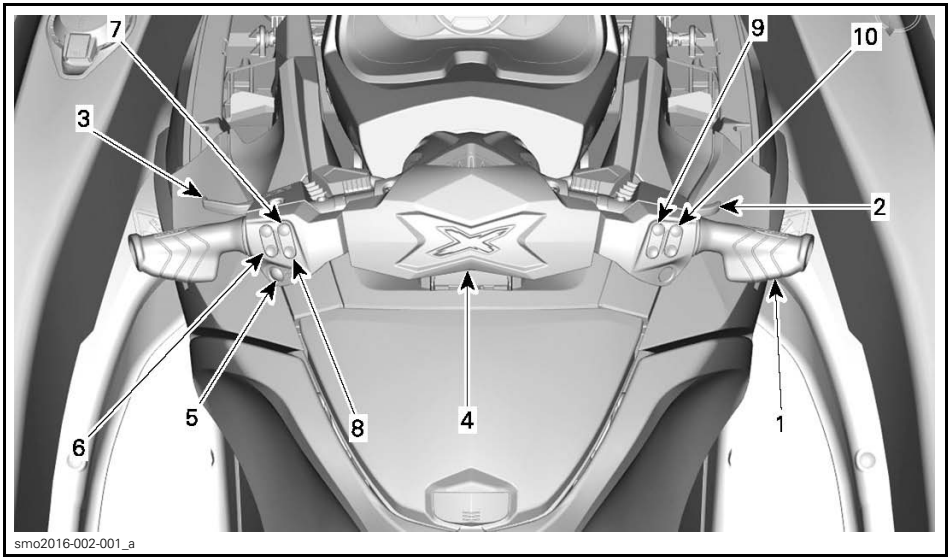

RXT-X/RXT-X aS

NOTE: Some indications, functions and features described in this section may not apply to every PWC model, or may be available as an option.

1) Handlebar

The handlebar controls the direction of the watercraft. During forward operation, turning the handlebar to the right steers the watercraft to the right and inversely.

⚠ WARNING

Check handlebar and corresponding steering nozzle operation before starting. Never turn handlebar while someone is near the rear of the watercraft. Keep away from propulsion system.

When operating in reverse, steering direction is reversed. Turning the handlebar to the right while backing up steers the watercraft to the left.

2) Throttle Lever

The throttle lever on the RH handlebar controls electronically the engine speed.

To increase or maintain watercraft speed, pull the throttle lever with your finger.

To decrease watercraft speed, release the throttle lever.

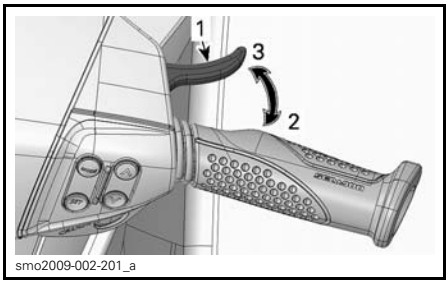

1. *Throttle lever*
2. *To accelerate*
3. *To decelerate*

The throttle lever is spring loaded and should return to rest position (idle) when not pressed.

3) iBR Lever (intelligent Brake and Reverse)

The iBR lever on the LH handlebar can electronically command:

– Brake
– Reverse
– Neutral.

NOTE: A minimum of 25% of iBR lever stroke is required to activate iBR functions.

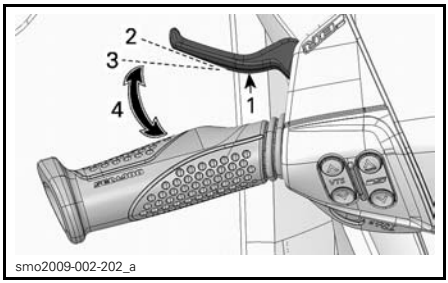

TYPICAL
1. *iBR lever*
2. *Lever rest position*
3. *25% stroke required to activate iBR functions*
4. *Operating range*

At speed above 14 km/h (9 MPH), pulling the iBR lever will engage the brake.

NOTE: If water current is 14 km/h (9 MPH) or above, the reverse can not be engaged as the speed threshold for the reverse is exceeded.

At speed below 14 km/h (9 MPH), pulling the iBR lever will engage reverse.

When the iBR lever is released after braking or reverse operation, the neutral is engaged.

⚠ WARNING

If throttle lever is still pulled in when releasing the iBR lever, forward movement will be initiated after a short delay. If forward acceleration is not desired, release the throttle lever.

NOTE: The neutral position can be fine tuned by trimming the iBR system.

Refer to *OPERATING INSTRUCTIONS* for detailed instructions.

4) Engine Cut-Off Switch

The engine cut-off switch is located in the middle of the handlebar.

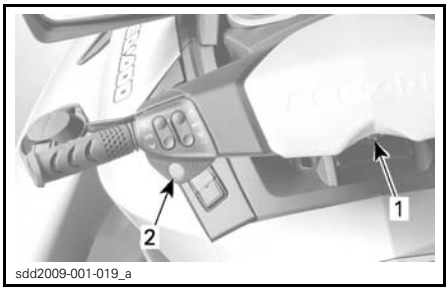

TYPICAL
1. *Engine cut-off switch*
2. *START/STOP button*

To allow engine starting, the tether cord cap must be securely snapped to the engine cut-off switch.

⚠ WARNING

Always attach the tether cord clip to the operator's personal flotation device (PFD) or wrist (wrist strap required).

TYPICAL
1. *Tether cord cap on the engine cut-off switch*
2. *Tether cord secured to operator's PFD*

To stop engine, pull the tether cord cap from the engine cut-off switch.

⚠ WARNING

Should the engine be stopped, the brake function and all watercraft directional control is lost.

⚠ WARNING

Always disconnect tether cord when watercraft is not in operation in order to prevent accidental engine starting or to avoid unauthorized use by others, children, and to prevent theft.

Radio Frequency Digitally Encoded Security System (RF D.E.S.S.)

The tether cord cap contains an electronic circuit (D.E.S.S.™ key) that is programmed to give it a unique electronic serial number. This is the equivalent of a conventional key.

The D.E.S.S. system reads the key installed on the engine cut-off switch and only allows engine starting for keys it recognizes.

The D.E.S.S. system brings great flexibility. You can buy additional tether cords and have the D.E.S.S. keys programmed for your watercraft.

A total of ten D.E.S.S. keys can be programmed.

To have a key programmed to your watercraft, see your authorized BRP Sea-Doo dealer.

RF D.E.S.S. Key Recognition

Two short beeps indicate the system is ready to allow engine starting. Otherwise, refer to the *TROUBLESHOOTING* section.

RF D.E.S.S. Key Types

Two types of keys can be used:

– Normal key
– Learning key.

To ease key recognition, the tether cord float comes in different colors.

KEY TYPE	FLOAT COLOR
Normal	Yellow or Black
Learning	Green

The information center displays the type of D.E.S.S. key used.

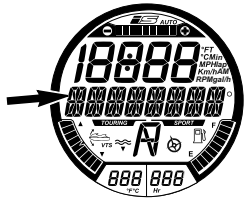

TYPE OF KEY IS DISPLAYED HERE

Message possibilities:
– NORMAL KEY
– LEARNING KEY.

The Sea-Doo learning key, limits the speed of the watercraft and the engine torque, therefore enabling first time users and less experienced operators to learn how to operate the watercraft while gaining the necessary confidence and control.

The learning mode offer also the possibility of setting the maximum speed of the watercraft.

For more information on learning keys, refer to *OPERATING MODES* section.

5) Engine START/STOP Button

The engine START/STOP button is located on the LH handlebar.

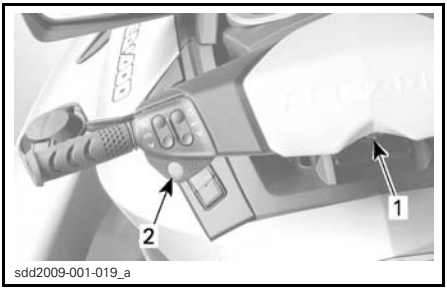

TYPICAL
1. *Engine cut-off switch*
2. *START/STOP button*

Engine Starting and Stopping

Refer to *OPERATING INSTRUCTIONS* for complete procedures on how to start and stop the engine.

Waking Up the Electrical System

Press the START/STOP button once without installing the tether cord on the engine cut-off switch.

This will power up the electrical system; the information center will cycle through a self-test function and will then go blank after a few seconds.

The electrical system will stay powered up for approximately 3 minutes after the START/STOP button was depressed.

This function allows the suspension to be activated (if applicable) without starting the engine.

NOTE: If the START/STOP button is pressed and held without the tether cord installed, the information center displays will stay on as long as the START/STOP button is held.

6) VTS (Variable Trim System) Button (all Models Except GTX 155 and GTX S 155)

This watercraft is equipped with a programmable high performance VTS.

It provides watercraft pitch trim adjustments by adjusting the vertical position of the jet nozzle.

The VTS can be electrically trimmed to desired attitude, or to one of two preset trim positions.

Press VTS control button (up or down button) to adjust riding attitude of the watercraft.

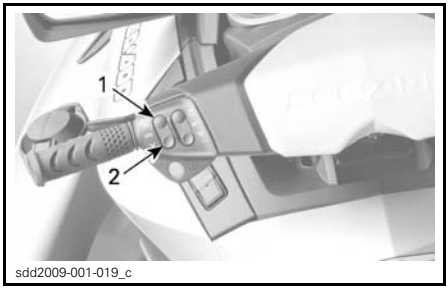

TYPICAL - VTS CONTROL BUTTON
1. *Bow up*
2. *Bow down*

Refer to *OPERATING INSTRUCTIONS* section for details.

7) Sport Button

The Sport button is located on the LH handlebar.

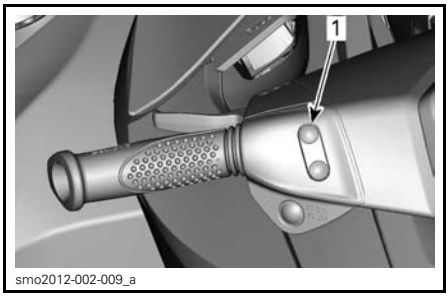

TYPICAL
1. *Sport button*

It is used to activate or deactivate SPORT mode.

Refer to *OPERATING MODES* subsection for details.

8) ECO Button

The ECO button is located on the LH handlebar.

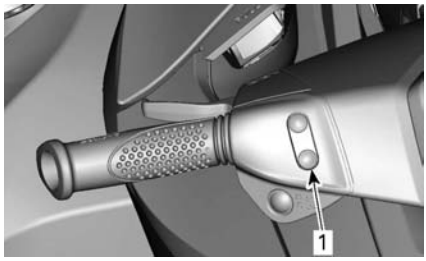

smo2012-002-009_b

TYPICAL
1. *ECO button*

It is used to activate or deactivate ECO mode.

Refer to *OPERATING MODES* subsection for details.

9) MODE/SET Buttons

These buttons are located on the RH side handlebar.

Press MODE button to scroll through various functions available through the information center.

Press SET button to select the desired function, navigate through a function submenu, or to save any modified settings.

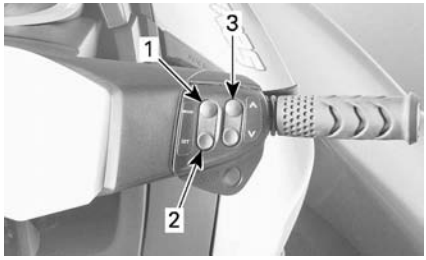

sdd2009-001-024_b

TYPICAL
1. *MODE*
2. *SET*
3. *UP/DOWN button*

10) UP/DOWN Buttons

These buttons are located on the RH side of the handlebar.

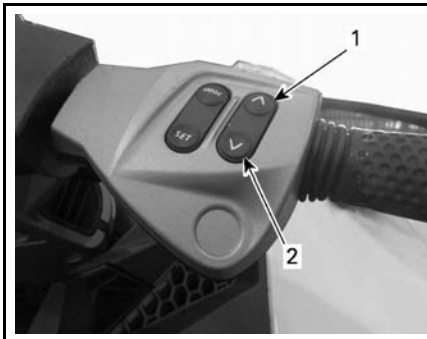

smo2012-003-007_b

TYPICAL
1. *Up button*
2. *Down button*

The UP/DOWN buttons are used to make a selection or change a settings through the information center.

11) Cruise Button (Except RXT-X and RXT-X aS Models)

The Cruise button is located on the RH side of the handlebar, just below the UP and DOWN button.

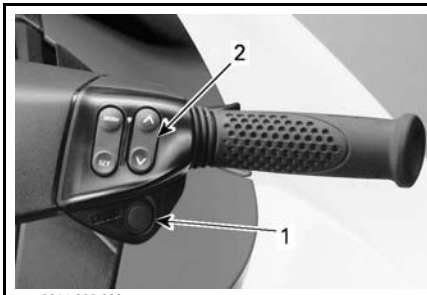

smo2011-002-009_a

TYPICAL
1. *Cruise button*
2. *UP and DOWN button*

It is used to activate or deactivate CRUISE mode or to engage SLOW SPEED mode.

Refer to *OPERATING MODES* for detailed instructions.

INFORMATION CENTER (GAUGES)

⚠ WARNING

Do not adjust the display while riding, you could lose control.

Information Center Description

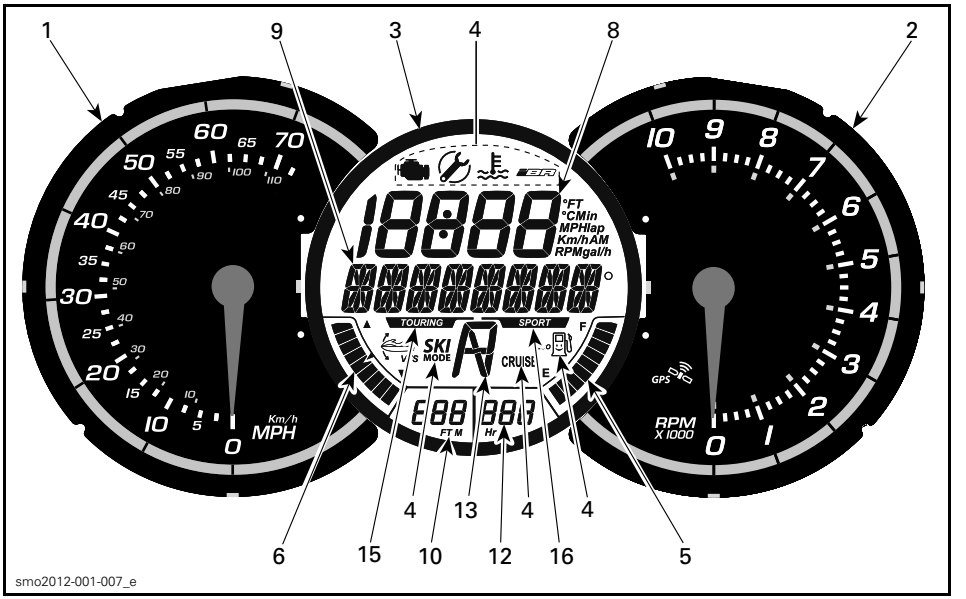

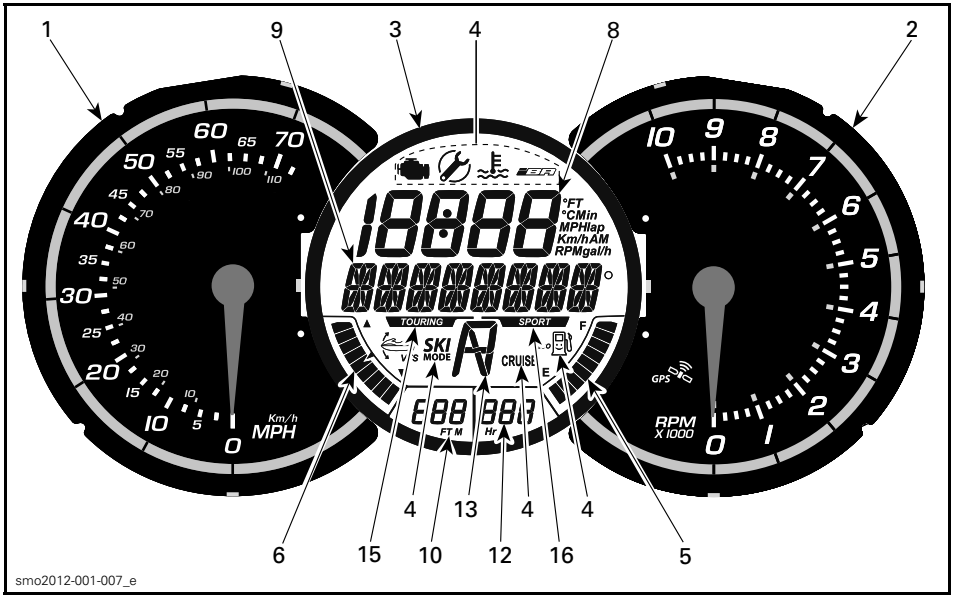

GTX 155/GTX S 155

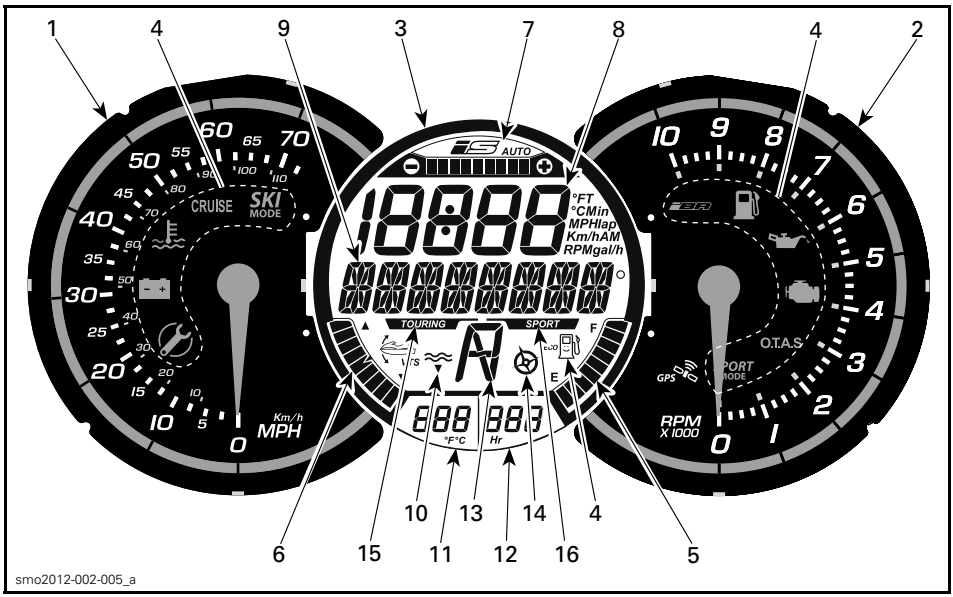

GTX LIMITED/GTX iS LIMITED/RXT/WAKE PRO

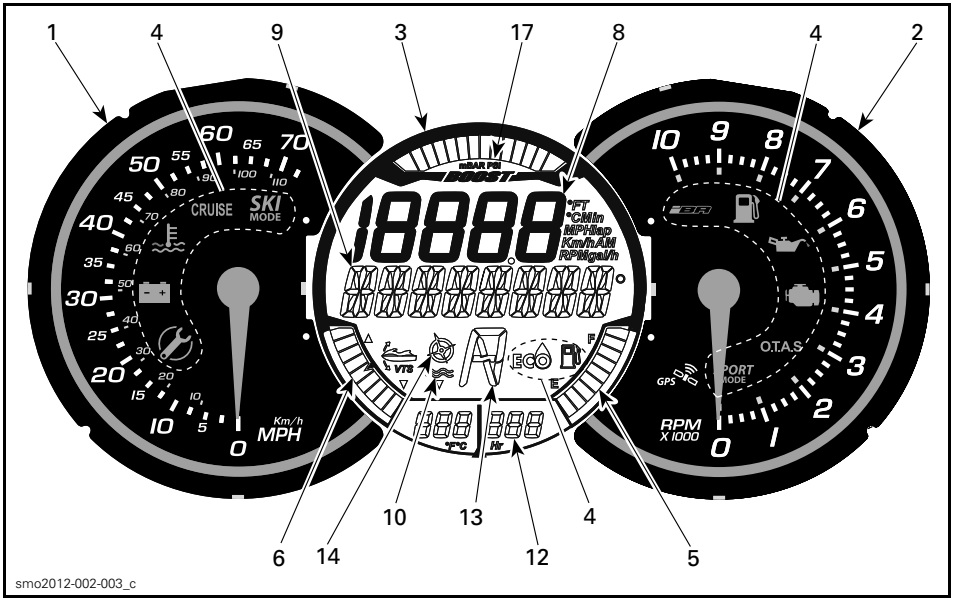

RXT-X/RXT-X aS

1) Speedometer

The speedometer, located in the LH side of the information center, provides an analog indication of the speed of the watercraft in miles per hour (MPH) and kilometers per hour (km/h).

The speed indication is based on a GPS (Global Positioning System) incorporated within the information center.

If for some reason the GPS signal is lost, a default mode is used whereby, the speed is calculated using information received from other systems to provide an estimated watercraft speed.

2) Tachometer

The tachometer provides an analog indication of the revolutions per minute (RPM) of the engine. Multiply the indicated number by 1000 to obtain the actual engine RPM.

3) Multifunction Gauge

The multifunction gauge, located in the center of the information center, is capable of displaying different indications simultaneously.

Numerical and multifunction displays in the digital screen indicator can be used to display various indications, or for selecting modes of operation and changing settings as explained in their respective sections.

Multifunction Gauge Features

	GTX 155 GTX S 155	GTX LIMITED	GTX LIMITED iS	RXT	RXT-X/ RXT-X aS	WAKE PRO
TOURING mode indicator	X	X	X	X	N.A.	X
SPORT mode indicator	X	X	X	X	N.A.	X
Fuel level indication	X	X	X	X	X	X
Hour meter display	X	X	X	X	X	X
Water depth indication	-	X	X	-	-	-
ECO mode indicator	X	X	X	X	X	X
CRUISE mode indicator	X	N.A.	N.A.	N.A.	N.A.	N.A.
iBR position indicator	X	X	X	X	X	X
SKI mode indicator	-	N.A.	N.A.	N.A.	N.A.	N.A.
VTS position indication	X	X	X	X	X	X
Boost gauge	N.A.	N.A.	N.A.	N.A.	X	N.A.
iS indicator	N.A.	N.A.	X	N.A.	N.A.	N.A.

X = Indicates a standard feature
- = See a Sea-Doo dealer for availability.
N.A. = Not Available or Not Active

4) Indicator Lights

Indicator lights (pilot lamps), inform you of a selected function or a system anomaly.

An indicator light may be accompanied by a scrolling message in the multifunction display.

See the following table for information on the usual pilot lamps. Refer to *MONITORING SYSTEM* for details on malfunction pilot lamps.

PILOT LAMPS (ON)	MESSAGE DISPLAY	DESCRIPTION
	MAINTENANCE REMINDER	Maintenance required. You may seek service from an authorized Sea-Doo dealer, repair shop, or person of your own choosing for maintenance, repair, or replacement. Please refer to the *US EPA EMISSIONS-RELATED WARRANTY* contained herein for information about warranty claims.
	LOW-FUEL	Low fuel level, approx. 25% tank capacity, 14 L (3.7 U.S. gal.) or fuel level sensor disconnected.
CRUISE	Scrolling SLOW SPEED MODE message	CRUISE mode or SLOW SPEED MODE engaged. Refer to *OPERATING MODES* subsection.
SKI MODE	Scrolling SKI MODE messages	Ski Mode activated. Refer to *OPERATING MODES* subsection.
SPORT MODE	Scrolling SPORT MODE messages	Sport Mode activated. Refer to *OPERATING MODES* subsection.
ALL MODELS EXCEPT RXT-X/RXT-X aS MODELS		
ECO	FUEL ECO	Fuel Economy Mode activated. Refer to *OPERATING MODES* subsection.
RXT-X/RXT-X aS		
ECO	FUEL ECO	Fuel Economy Mode activated. Refer to *OPERATING MODES* subsection.

5) Fuel Level Indication

A bar gauge located in the bottom RH side of the multifunction display continuously indicates the amount of fuel in the fuel tank while riding.

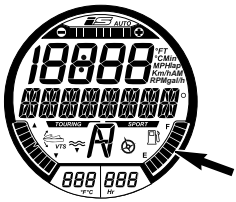

FUEL LEVEL INDICATION

When the fuel tank is full, 8 segments (bars) of the indicator are turned on. The top segment is not used.

Low Fuel Level Warning

It is active when there is only 2 segments of fuel indicated (approximately 25% fuel tank capacity or 14 L (3.7 U.S. gal.).

All Models Except GTX 155 and GTX S 155

LOW FUEL LEVEL WARNING	
Last 2 fuel gauge segments	ON
Fuel tank symbol (LED)	
Audible warning (one long beep)	Periodically
Scrolling LOW FUEL WARNING message	

GTX 155 and GTX S 155 Models

LOW FUEL LEVEL WARNING	
Last 2 fuel gauge segments	Flashing
Fuel tank symbol (LCD)	
Audible warning (one long beep)	Periodically
Scrolling LOW FUEL WARNING message	

6) VTS Position

The VTS position indication located in the bottom LH side of the digital screen shows the riding attitude of the watercraft.

A single segment of a bar gauge type indicator is turned on to indicate the relative position of the watercraft bow.

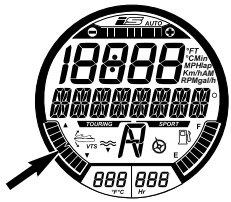

VTS POSITION INDICATION

Refer to *OPERATING INSTRUCTIONS* for more details on using the VTS.

7) iS Position (GTX Limited iS Only)

The iS display (intelligent Suspension) provides a visual indication of the relative height of the suspension.

It also indicates if the suspension is in AUTO mode of operation.

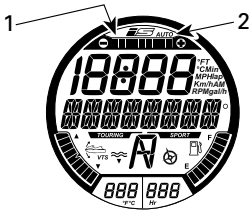

1. iS position indicator
2. iS AUTO mode indicator

When the suspension system is operating in AUTO mode, the AUTO indicator and all bar segments of the position indicator will be on.

When the suspension height is adjusted manually using the UP/DOWN buttons (while in iS mode), the system switches to MANUAL mode of operation. The AUTO indication disappears and only one bar segment of the position indicator will be on.

Refer to *OPERATING INSTRUCTIONS* for more information on using the suspension.

8) Numerical Display

The numerical display is used to provide a variety of indications as selected by the operator using the DISPLAY function in the multifunction display.

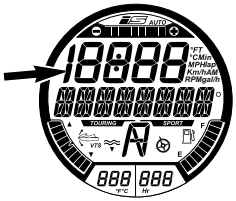

NUMERICAL DISPLAY

The available indications are dependent on the watercraft model or option installed.

AVAILABLE INDICATIONS IN NUMERICAL DISPLAY	GTX 155, GTX S 155	GTX LIMITED, GTX LIMITED iS	RXT	RXT-X aS, RXT-X	WAKE PRO
Watercraft speed	Indication by default				
Engine RPM	X	X	X	X	X
Engine temperature	-	-	-	X	-
Lake water temperature	N.A.	X	N.A.	N.A.	N.A.
Clock	X	X	X	X	X
Learning key settings	X	X	X	X	X
CRUISE SPEED setting	X	X	X	-	X
SLOW SPEED MODE setting	X	X	X	-	X
VTS preset	-	X	X	X	X
VTS settings (through gauge)	X	N.A.	N.A.	N.A.	N.A.
SKI MODE settings	-	-	-	-	X
Fuel consumption (instant and average)	X	X	X	X	X
Fuel autonomy (distance and time to empty)	-	X	-	X	-
Lap timer	-	-	-	X	-
Top speed/RPM Average speed/RPM	-	-	-	X	-
Altitude	N.A.	X	N.A.	N.A.	N.A.
X = An X indicates a **standard** feature - = See a Sea-Doo dealer for availability. N.A. = Not Available					

When the information center is first powered up, the numerical display defaults to the last selected indication.

9) Multifunction Display

The multifunction display is used to:

- Display the WELCOME message on power up.
- Display the KEY recognition message.
- Provide various indications as selected by the operator.
- Activating and setting various functions and modes of operation.
- Display scrolling messages of function activation or system faults.
- Display fault codes.

NOTE: The default indication in the multifunction display is the compass direction.

10) Water Depth Display (GTX Limited and GTX Limited iS Models)

The water depth display provides an indication of the lake water depth.

The system is capable of indicating water depth under the hull in single increments up to 50 m (164 ft).

NOTE: Under certain conditions, the display may stop indicating. The display ability to provide an indication of the water depth depends on the conditions of use.

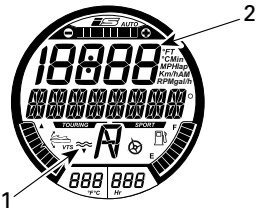

WATER DEPTH DISPLAY

1. Depth finder indicator
2. Water depth indication

NOTE: The water depth indication is only available when a depth sounder is installed and detected.

⚠ WARNING

Never use the depth sounder as a warning device to ride in shallow water.

11) Lake Water Temperature Display (GTX Limited and GTX Limited iS Models)

Continuously displays surface water temperature.

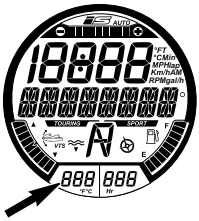

The numerical display may also be selected to display water temperature. See *NUMERICAL DISPLAY* in this section.

To change the unit of measurement (°C or °F), see your authorized Sea-Doo dealer.

12) Hour Meter Display (HR)

Continuously displays the accumulated engine hours.

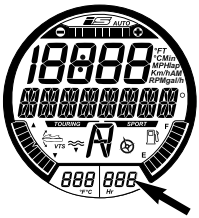

HOUR METER DISPLAY

13) iBR Position

Provides an indication of the iBR gate position.

– N (neutral)
– F (forward)
– R (reverse).

iBR POSITION INDICATOR

14) Compass

A GPS incorporated in the information center provides the indication in the multifunction display.

The cardinal points, intermediate cardinal points, as well as the azimuth the watercraft is travelling are displayed in the multifunction display by default when the watercraft is moving.

For a compass indication to be displayed, the GPS must have a good link with the navigation satellites.

All Models Except GTX 155 and GTX S 155

This is confirmed when the COMPASS active indicator is visible in the digital screen.

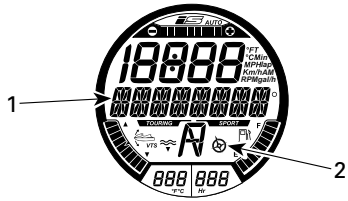

COMPASS (ALL MODELS EXCEPT RXT-X/RXT-X aS)

1. Compass indication
2. Compass active indicator

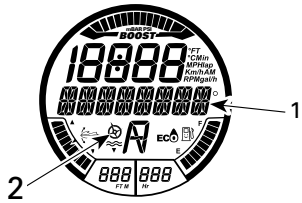

COMPASS (RXT-X/RXT-X aS MODELS)

1. Compass indication
2. Compass active indicator

NOTE: The compass indication is only available above 5 km/h (3 MPH).

⚠ WARNING

Use the compass as a guide only. Not to be used for precision navigation purposes.

15) Touring Mode Indicator (all Models Except RXT-X/RXT-X aS)

When the TOURING mode indicator is ON, the default TOURING mode is active.

TOURING MODE INDICATOR

For more information on the touring mode, refer to *OPERATING MODES* subsection.

16) Sport Mode Indicator

SPORT MODE INDICATOR (ALL MODELS EXCEPT RXT-X/RXT-X aS)

When sport mode of operation is selected, the sport mode indicator will come on and stay on until sport mode is deactivated, or the watercraft is shut down.

NOTE: The sport mode is not the default riding mode. To be active, it must be selected after starting the engine.

For instructions on how to engage sport mode, refer to *OPERATING MODES* subsection.

GTX Limited/GTX Limited iS/RXT/WAKE PRO

In addition to the sport mode indicator in the multifunction display, a SPORT MODE indicator light turns ON in the tachometer.

RXT-X/RXT-X aS

There is no sport mode indicator in the multifunction display, only a SPORT MODE indicator light turns ON in the tachometer.

17) Boost Gauge (RXT-X/RXT-X aS)

BOOST INDICATOR

The boost gauge indicates the manifold pressure of the engine provided by the supercharger.

Navigating the Multifunction Display

When the electrical system is powered up and the cluster has completed its self test function, a WELCOME ABOARD SEA-DOO scrolling message will appear for a few seconds. After the welcome message, nothing will appear in the display until the watercraft is operated.

When the watercraft is being operated, the multifunction display provides an indication of compass heading or scrolling messages from the monitoring system.

The multifunction display is also used to display a menu for the selection of various functions which, permit changing the numerical display indication, system modes of operation, settings, active system fault codes, and a lap timer.

⚠ WARNING

Selecting various numerical displays, system modes of operation or changing settings should only be carried out with the watercraft stopped. Selecting these various functions while operating the watercraft at speed is not recommended as it deters your attention from situational awareness.

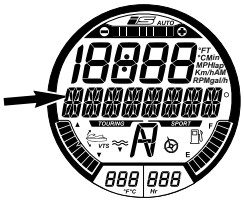

MULTIFUNCTION DISPLAY

NOTE: To change the unit of measurement or the language displayed, see your authorized Sea-Doo dealer.

Selecting Functions

When operating at speed, the multifunction display normally provides an indication of the compass direction and azimuth the watercraft is traveling.

To select the various functions available through the multifunction display, press the MODE button repeatedly until the desired function is visible:

- LAP TIME
- SKI MODE
- LAP TIME
- FUEL CONSUMPTION
- VTS MODE
- DISPLAY
- FAULT CODES
- KEY MODE
- SETTINGS.

Then press the SET button to enter that function.

NOTE: The fault code function is only available when there is an active fault. The settings and key mode functions are only available when the engine is shut off. The key mode function is only available with a normal key.

Function Description

Lap Timer

The lap timer can be used to record up to 50 individual lap times.

To activate and use the lap timer, carry out the following:

1. Press the MODE button repeatedly until LAP TIME is visible in the multifunction display.

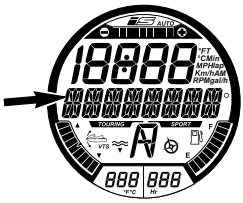

MESSAGE DISPLAYED

LAP TIME

2. Press the SET button to enter the function, the lap timer will be activated and visible in the display.

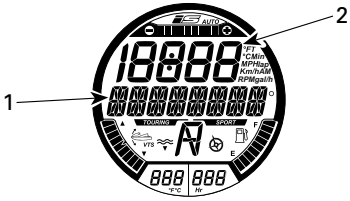

FUNCTION SELECTED: LAP TIMER

1. Lap time
2. Lap count

3. To start the timer, press the SET button.

NOTE: The timer starts immediately when pressing the SET button.

4. To record each lap time, press the SET button at the start of each lap.

NOTE: The lap time will be recorded, the lap counter in the numerical display will count the number of laps recorded, and the timer will continue to run.

5. To save the last lap and stop the timer, press the MODE button.

To view each lap time, use the UP or DOWN button. The lap counter will indicate which lap is indicated.

To view the cumulative lap time of all laps recorded, use the UP or DOWN button until ALL is visible in the lap counter.

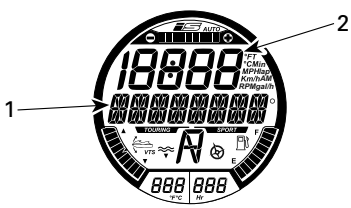

MESSAGE DISPLAYED: LAP TIMER
1. Total time 2. ALL is displayed here

To reset the lap timer and lap counter, press and hold the SET button until the timer and counter are reset to 0 (zero).

Ski Mode

Ski mode is used for repeated controlled launches when towing a skier or wakeboarder. Refer to *OPERATING MODES* for more details.

Fuel Consumption

The FUEL CONSUMPTION function is used to display the watercrafts fuel consumption in four different ways.

– Instant fuel flow per hour (gal/h or l/h)
– Average fuel flow per hour (gal/h or l/h)
– Distance to empty (Mi or Km)
– Time to empty (h or min).

The fuel consumption functions are not continuously active.

A fuel consumption function becomes active only when selected as the indication in the numerical display.

When the LOW FUEL indications come on in the multifunction gauge, the "TIME TO EMPTY" and "DISTANCE TO EMPTY" functions will indicate "0" (zero) if they are the selected indication.

To display the watercraft fuel consumption, carry out the following:

1. Press the MODE button repeatedly until FUEL CONSUMPTION is visible in the multifunction display.

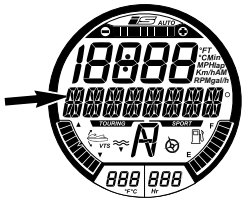

MESSAGE DISPLAYED
FUEL CONSUMPTION

2. Press the UP or DOWN button to toggle to the desired fuel consumption display mode.

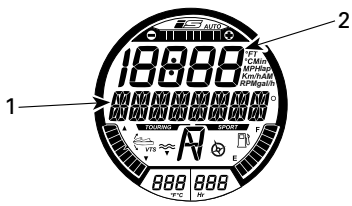

FUEL CONSUMPTION DISPLAY MODE
1. INSTANT FUEL CONSUMPTION message 2. Fuel consumption value

3. Press the SET button to save the setting and return to the main display.

NOTE: The fuel consumption value will be displayed in the numerical display. Double click the SET button to reset the average fuel consumption indication. The display will momentarily indicate zero (0).

VTS Mode

The VTS MODE function is used to manually set the VTS or change VTS PRESET settings. Refer to *OPERATING INSTRUCTIONS* subsection for details.

Display

The DISPLAY function is used to change the indication in the numerical display. Refer to *CHANGING NUMERICAL DISPLAY INDICATION*.

Fault Codes

The FAULT CODES function is used to display active fault codes. Refer to *MONITORING SYSTEM* subsection.

Key Mode

The KEY MODE function is used for changing LEARNING key settings. Refer to *OPERATING MODES* subsection for details.

Settings

The SETTINGS function is used for:

– Clock setting. Refer to *MULTI-FUNCTION GAUGE SETUP*
– iBR override function for maintenance.

Changing Numerical Display Indication

To change the indication in the numerical display, carry out the following:

1. Press the MODE button on the RH handlebar repeatedly until DISPLAY is visible in the multifunction display.

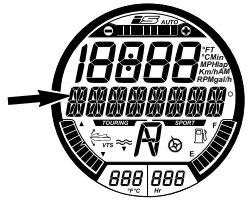

MESSAGE DISPLAYED
DISPLAY

2. Press the SET button to enter the DISPLAY function.
3. Press the UP or DOWN button until the preferred available indication appears.
   – RPM
   – SPEED
   – LAKE TEMPERATURE (only on models GTX Limited and GTX Limited iS 260)
   – DEPTH
   – ENGINE TEMP
   – ALTITUDE
   – TOP SPEED
   – AVG SPEED
   – TOP RPM
   – AVG RPM
   – CLOCK.

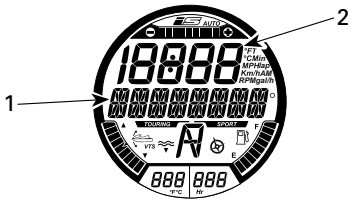

NUMERICAL DISPLAY SELECTION
1. Type of selected numerical display indication 2. Applicable value

4. Press the SET button to select and save the preferred indication, or wait for the display function to time out. The last indication visible will be automatically saved.

The following abbreviations are used in the numerical display:

– FT or M
– RPM
– MPH or Km/h
– °F or °C
– AM or PM
– Gal/h or l/h.

Resetting Numerical Display Indication

The following numerical display indications can be reset:

– Average fuel consumption
– Top speed
– Average speed
– Top RPM
– Average RPM.

To reset indications, double click the SET button. The numerical display will momentarily indicate zero (0).

NOTE: Each of these functions become active ONLY when selected as the numerical display indication.

Multifunction Gauge Setup

Changing Clock Setting

1. Press the MODE button repeatedly until SETTINGS is visible in the multifunction display.

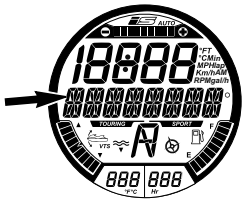

MESSAGE DISPLAYED
SETTINGS

2. Press the UP or DOWN button repeatedly until CLOCK is visible.

FUNCTION SELECTED - CLOCK
1. CLOCK message 2. Time

3. Press the SET button to enter the function. CHANGE CLOCK OFFSET message will be displayed.

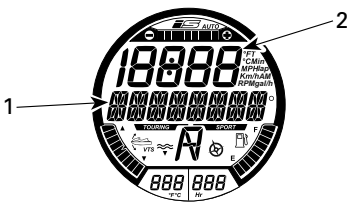

FUNCTION SELECTED - CHANGE CLOCK OFFSET

1. CHANGE CLOCK OFFSET message
2. Time

4. Press the UP or DOWN button to adjust the clock to the correct local time.
5. Press the SET button to save the setting and return to the main display.

NOTE: The clock uses the GPS signal to maintain the appropriate time referenced to Greenwich Mean Time (GMT). When setting the clock, only the hour indication may be changed.

Units of Measurement and Language Setting

The multifunction gauge is capable of displaying information in metric or imperial units and in various languages.

To change the units of measurement or to change the language displayed in the multifunction gauge, see your authorized Sea-Doo dealer.

NOTE: Illustrations may not be accurate for every model and are only provided as a visual guide.

NOTE: Some vehicle safety labels are not shown on illustrations. For information on vehicle safety labels, refer to *WATERCRAFT SAFETY LABELS* subsection.

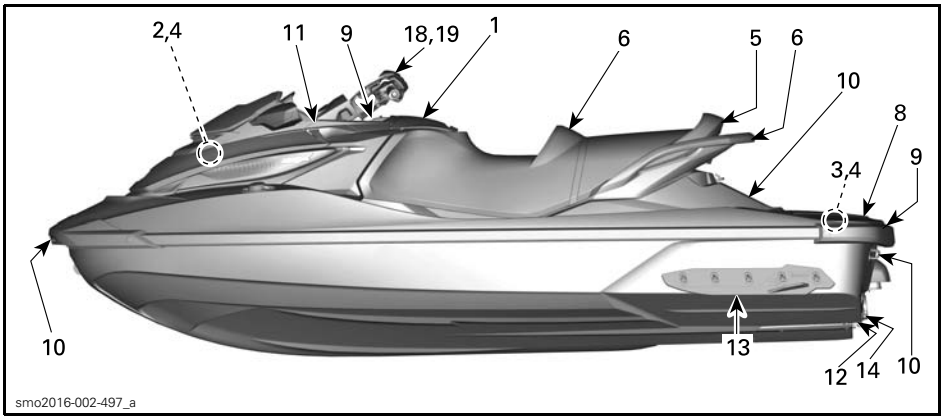

TYPICAL

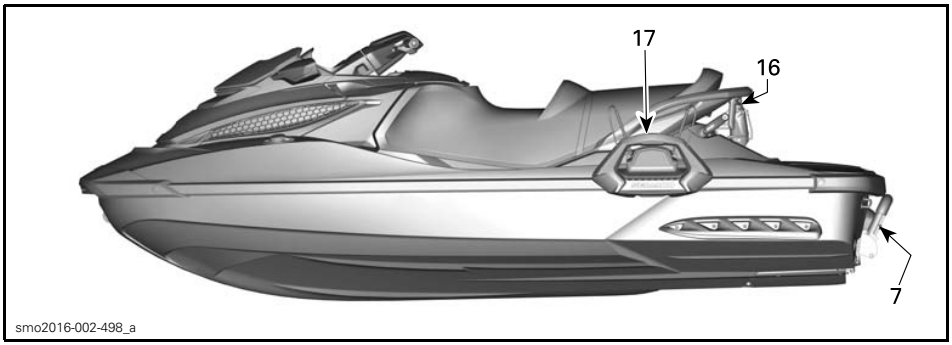

WAKE PRO MODELS

1) Glove Box

A small, storage compartment for personal articles.

Pull up on cover latch to open glove box.

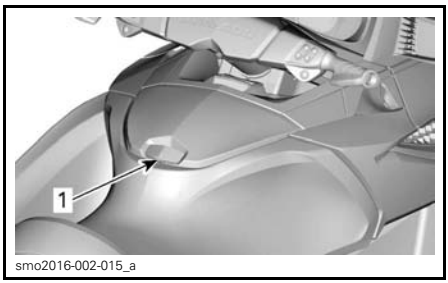

TYPICAL — GLOVE BOX
1. Cover latch

Glove Box Organizer (GTX Limited and GTX Limited iS Models)

A removable glove box organizer can be used for storing and carrying personal items.

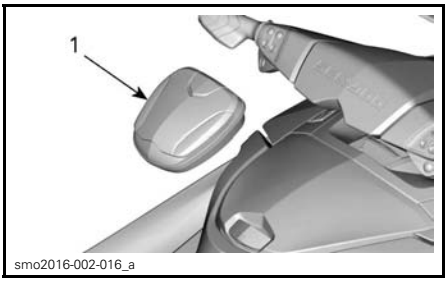

TYPICAL
1. glove box organizer

Glove Box Liner Bag (GTX Limited and GTX Limited iS Models)

A glove box liner bag protects items stored in the glove box. The liner bag is easily removed from the glove box by pulling it out using the two eyelets.

GLOVE BOX LINER BAG

2) Front Storage Bin

A watertight storage bin that can be used to carry larger personal articles is located under the front cover. The storage bin is self-contained and removable.

FRONT STORAGE BIN

Storage Bin Access

Open the front storage compartment cover by pulling upwards on the two cover latch handles (one each side).

TYPICAL - STORAGE BIN ACCESS
1. Front cover latch handles (one each side)

How to Open Storage Bin Cover

Release cover latches then pull on cover handle to open.

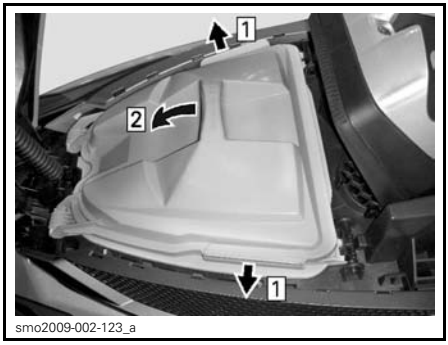

HOW TO OPEN STORAGE BIN
Step 1: Release cover latches
Step 2: Pull cover open

NOTICE The maximum load allowable for the front storage bin is 9 kg (20 lb) evenly distributed.

⚠ WARNING

Never leave any heavy or breakable objects loose in the front storage bin. Do not overload. Never operate the watercraft with any storage compartment cover open.

Storage Bin Removal

Ensure the latches on the storage bin cover are properly locked.

Push back on the latches that lock the storage bin in position. Then pull up on the storage bin handle while tilting the bin forward to release the front tabs, and remove it from the watercraft.

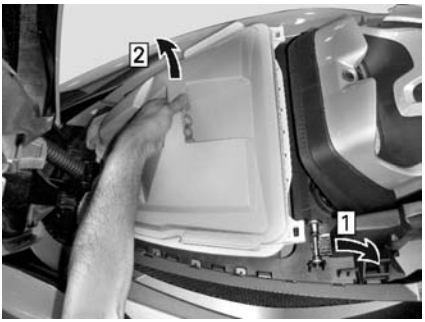

smo2009-002-124_a

STORAGE BIN REMOVAL
Step 1: Push back on storage bin latches
Step 2: Lift and tilt forward to release front tabs

⚠ WARNING

On models with 1630 ACE™ HO engines, never store or carry anything underneath storage bin, or between the moving deck and fixed deck.

Storage Compartment Under Storage Compartment (1630 ACE HO Engine)

An additional storage compartment is located under the storage bin and can be accessed by removing the storage bin.

⚠ WARNING

Never leave any heavy or breakable objects loose in this storage comparment. Do not overload.

Storage Bin Installation

As you insert the storage bin in the front storage compartment, tilt it forward to insert the storage bin front tabs in their retainers underneath the storage cover shock support.

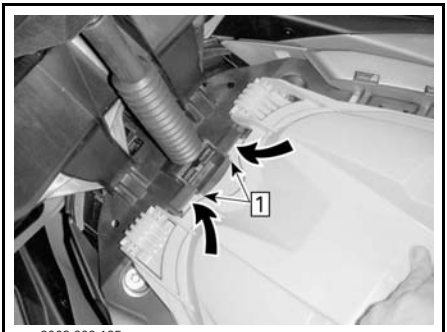

smo2009-002-125_a

Step 1: Insert storage bin front tabs

Push down on aft end of storage bin to secure in place with locking latches (one each side).

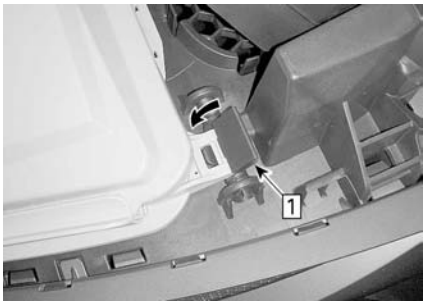

smo2009-002-126_a

Step 1: Push down onto latches to secure

Ensure storage bin is properly inserted in the locking latches, and ensure the latches are locked forward.

NOTICE **Never operate the watercraft if the storage bin is not properly secured.**

All Models Without Suspension

NOTICE **Do not operate watercraft if the front storage bin is not installed, otherwise water will enter bilge.**

3) Rear Storage Bins

Models with Suspension

Two storage bins are located under the rear boarding platform. They are Ideal for storing items such as a towrope, first aid kit, fire extinguisher, and other items.

When the boarding platform is closed, it serves as the cover for both storage bins.

The RH storage bin is specially designed for storing an approved fire extinguisher (sold separately).

smo2009-002-127_a

1. Fire extinguisher holder location

The RH storage bin can be removed for servicing the watercraft.

To remove storage bin, pull off the two plastic rivets within the bin (fore and aft) then lift the storage bin out of the fixed deck.

smo2009-002-128

BATTERY AND FUSE ACCESS - RH STORAGE BIN REMOVED

NOTICE **Never operate the watercraft without both rear storage bins installed. Always ensure the rear boarding platform is properly closed and latched over the storage bins. If not properly latch, water rushing over the platform during extreme maneuvers may open the platform and dislodge the RH storage bin. Should this happen, water will enter the bilge and may lead to engine damages or electrical problems.**

4) Fire Extinguisher Holder

Models with Suspension

Use the support inside the RH storage bin under the rear boarding platform, and secure the extinguisher using the rubber tie-down.

Refer to *REAR STORAGE BINS* for illustration.

NOTE: Fire extinguisher is sold separately.

Models Without Suspension

The fire extinguisher support is located under the front storage bin.

5) Seat

This model comes equipped with an ergonomic seat narrowing towards the front with knee grab design allowing you to position your legs towards the inside of the footwells, minimizing upper body fatigue and granting you more control when cornering.

This seat is designed for an operator and a passenger.

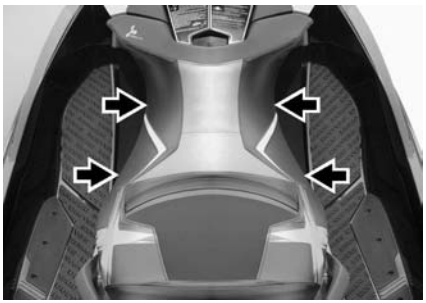

smo2012-003-026_a

ERGONOMIC SEAT

Seat Removal (1503 4-TEC™ Engine)

To remove the seat, pull up on the latch handle and lift the back end of the seat.

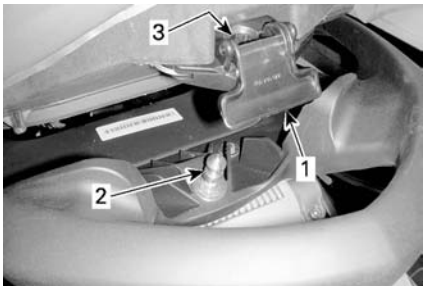

smo2009-002-129_a

TYPICAL - SEAT LATCH
1. *Seat latch handle*
2. *Latch pin*
3. *Pin insertion hole*

Then pull the seat up and backwards to remove the seat from the watercraft.

Seat Opening (1630 ACE HO Engine)

To lift the seat, pull up on the latch handle and lift the back end of the seat.

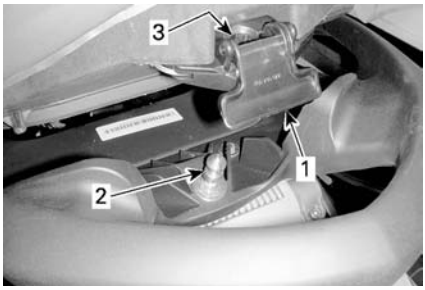

smo2009-002-129_a

TYPICAL - SEAT LATCH
1. *Seat latch handle*
2. *Latch pin*
3. *Pin insertion hole*

Seat Installation (1503 4-TEC Engine)

To install the seat, insert the forward end of the seat in it's retainer.

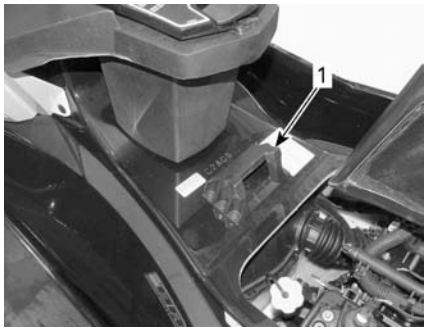

1. Forward seat retainer

Align the seat latch with the latch pin and firmly press down on the rear portion of the seat to lock it in place.

Pull up on the rear portion of the seat to ensure it is properly latched.

CAUTION Ensure the latch is properly locked onto the pin.

Seat Installation (1603 Engine)

Lower seat and push to lock into place.

Pull up on the rear portion of the seat to ensure it is properly latched.

CAUTION Ensure the latch is properly locked onto the pin.

6) Passenger Handholds

The seat strap provides a handhold for a passenger to hold on to when riding.

The sides of the molded grab handle at the rear of the seat also provide a handhold for a passenger. The rear portion of the molded grab handle provides a handhold for the skier/wakeboarder (if applicable) spotter or boarding the watercraft from the water.

NOTICE Never use the molded grab handle to tow anything or to lift the watercraft.

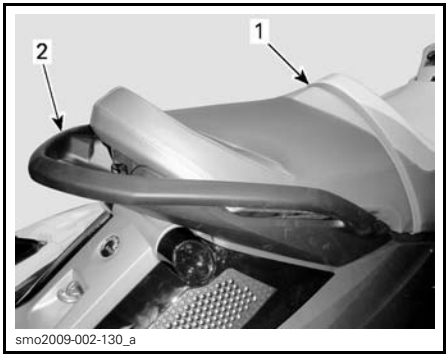

TYPICAL - PASSENGER HANDHOLDS
1. Seat strap
2. Molded grab handle

7) Boarding Step (If Equipped)

A convenient step used for boarding the watercraft from the water.

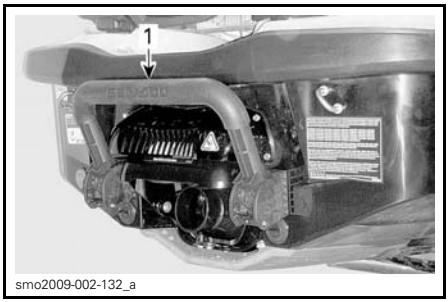

TYPICAL
1. Boarding step

WARNING

The engine must be shut off before attempting to board the watercraft using the boarding step.

Pull down the step with your hand and hold until a foot or a knee is put on the step.

smo2009-002-133

BOARDING STEP HELD DOWN FOR BOARDING FROM WATER

NOTICE

- Never use the step for boarding a watercraft that is out of water.
- Never use the step for pulling, towing, diving or jumping, or any other purpose other than as a boarding step.
- Stay on center of the step.
- Only one person at a time on the step.

⚠ WARNING

Be aware of the iBR gate movement when starting the engine, shutting down the engine or using the iBR lever. Automatic movement of the gate may squeeze fingers or toes of people taking a hold on the back or your PWC.

8) Boarding Platform

A boarding platform covers the rear deck area.

Two indentations in the platform are used as foot rests for the rear facing spotter when towing a skier or tuber.

Models with Suspension

Two grab handles near the rear edge of the platform provide hand holds for a person boarding from the water.

The platform also serves as a watertight cover for two rear storage bins that are accessible when opening the platform. It is hinged to the fixed deck at the rear, and held closed by two latches at its front corners.

To open the boarding platform, pull up on each latch handle and lift the deck fully up. A cylinder on the left side is capable of holding the platform open.

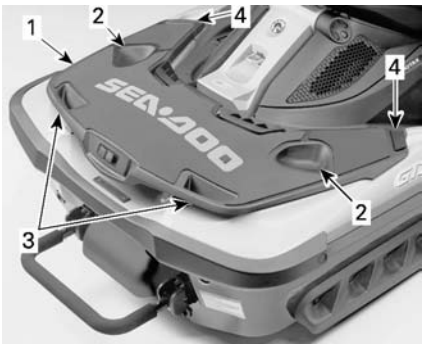

smo2009-002-131_c

GTX LIMITED iS MODEL ILLUSTRATED
1. *Boarding platform*
2. *Spotter foot rests*
3. *Grab handles*
4. *Latch handles*

9) Speed-Ties (GTX Limited and GTX Limited iS Models)

Two speed-ties are provided for mooring of the watercraft.

One speed-tie is located just below the LH handlebar, the other is located in the center rear edge of the boarding platform.

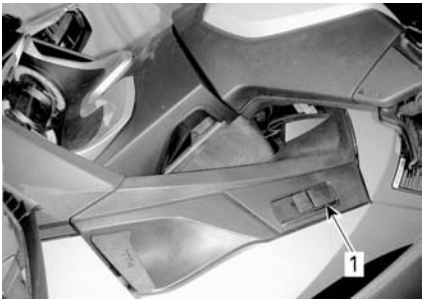

smo2009-002-134_a

1. *Front speed-tie*

smo2009-002-131_d

1. *Rear speed-tie*

⚠ WARNING

- Do not use retractable ropes when watercraft engine is running.
- Do not use to tow a watercraft. Do not use to pull a person or any object behind or to the side of the watercraft.
- Do not use speed-tie rope as a tie-down on a trailer.

NOTICE

- This system is designed for temporary use in normal conditions. Do not use as a permanent mooring system, or in extreme conditions (strong winds, waves, etc.).
- Regularly inspect rope condition; do not tie up watercraft with a damaged rope. Replacing BRP rope by any other rope will void the speed-tie warranty.
- If speed ties are used in salt water conditions, the rope should be regularly rinsed thoroughly with fresh water to prevent salt buildup in the rope and speed-tie mechanism. This will help extend the life of the rope and ensure proper operation the mechanism.

NOTE: The rope of the speed-tie is a wear item that is not covered under normal warranty.

Refer to *MAINTENANCE* section for speed-tie cleaning instructions.

Mooring your PWC Using the Speed-Ties

1. With your watercraft parallel to the dock and at a standstill next to the dock mooring cleat, release the front speed-tie by lifting the lever.
2. Grasp and pull on the mooring line stopper to extract enough line to reach and tie off to the mooring cleat.

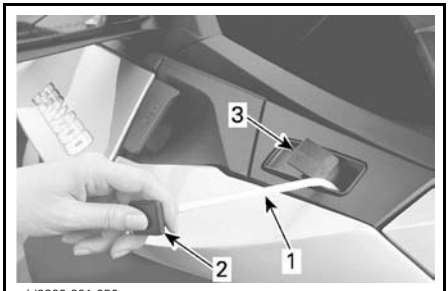

sdd2009-001-050_a

TYPICAL - FRONT SPEED TIE
1. *Speed-tie mooring line*
2. *Mooring line stopper*
3. *Speed-tie locking lever*

3. Push down on the speed-tie locking lever to lock the mooring line.

NOTICE **Always ensure the speed-tie rope is properly locked. Make sure mooring rope is not in contact with any components that could lead to watercraft damaged or premature rope wear.**

4. When speed-tie rope is secured to the dock cleat with the watercraft still parallel to the dock, carefully step onto the dock. Step from the foot well or seat of the watercraft, **do not** stand on the rail of the watercraft as this could cause it to become unstable.
5. Hold the watercraft parallel with the dock and repeat the tying operation with the rear speed-tie. When using the rear rope, be careful not to fall.

NOTE: Docking procedure is basically the same if there are passengers aboard. However, the operator should ask that passengers remain still and maintain their weight centered over the seat during docking. The passengers must step onto the dock only after front mooring rope is secured to dock cleat. The operator must remain on the watercraft to keep the watercraft parallel with the dock during passengers landing.

NOTICE

- **Do not moor watercraft with only one retractable rope. Always use front and rear systems together.**
- **During mooring, do not overtighten ropes. Always leave a little slack. Take tides into consideration if applicable. Always moor watercraft with the rope and not with its plastic end.**
- **The mooring system does not protect watercraft against impacts with the dock. Use dock bumpers (cushions) in combination with retractable ropes to protect your watercraft.**
- **Always moor watercraft to a dock of appropriate height using strong mooring cleats.**

Casting Off Using Speed-Ties

1. When casting off, first untie the rear speed-tie. Retract the mooring rope, hold the mooring rope stopper near its receptacle and lift the locking lever. Once the mooring rope is retracted, snap the mooring rope stopper into its receptacle.
2. Step onto the watercraft. Be sure to position your weight over the center of the watercraft as much as possible to maintain watercraft stability.
3. Carefully move to the operators' position.
4. Release the front mooring rope from the dock cleat, retract it and lock the stopper as with the rear speed-tie.
5. Push or drift the watercraft away from the dock.

CAUTION **Be careful when retracting mooring rope. Always hold the stopper near its receptacle before unlocking the lever. Do not stand in the path of a retracting rope.**

CAUTION **Ensure that ropes are properly retracted and that stoppers are properly snapped in before starting watercraft.**

10) Front and Rear Eyelets

Eyelets can be used for mooring, towing and as tie-down points when trailering your watercraft.

Front Eyelet

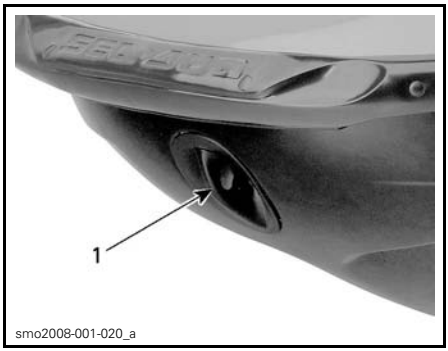

TYPICAL
1. Front eyelet

Rear Eyelets

smo2011-002-010_a

TYPICAL
1. *Eyelet*

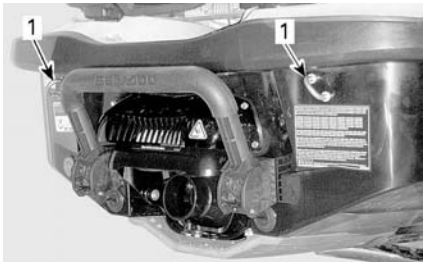

smo2009-002-132_b

TYPICAL
1. *Eyelets*

11) Mooring Cleats

These cleats can be used for temporary docking such as when refueling.

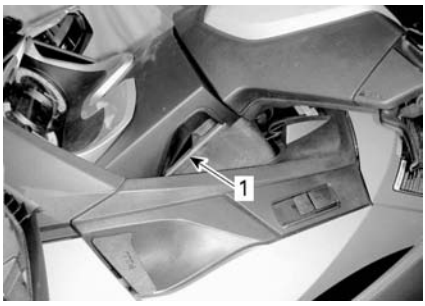

smo2009-002-134_b

TYPICAL
1. *Mooring cleats*

NOTICE Never use mooring cleats to pull or lift the watercraft.

12) Bilge Drain Plugs

Unscrew drain plugs whenever watercraft is on the trailer. This will allow water accumulated in the bilge to be evacuated and helps to reduce condensation.

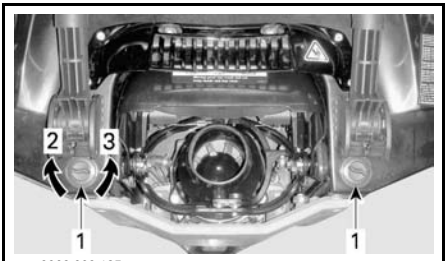

smo2009-002-135_a

TYPICAL
1. *Drain plugs*
2. *Tighten*
3. *Loosen*

NOTICE Ensure drain plugs are properly secured prior to launching the watercraft in water.

13) Adjustable Sponsons (RXT-X aS)

The adjustable sponsons change the lateral grip of the watercraft.

smo2012-003-018_a

TYPICAL - LH SIDE SHOWN
1. *Adjustable sponson*

Sponson Adjustment Guideline

The sponsons offer 3 possible height settings.

NOTE: When adjusting the sponsons to a different setting than factory (Sport), the trim tabs should be left to factory setting (0).

⚠ WARNING

After adjusting sponsons, always familiarize yourself with the new handling characteristics of the watercraft.

SPONSON ADJUSTMENT GUIDELINE	
Race	Increase lateral grip for faster turning response. Race position is NOT recommended when riding with passenger(s).
Sport (factory setting)	Offer a balance combination between Race and Freeride positions. Preferred position for overall riding conditions (especially rough water) or if riding with passenger(s).
Freeride	Decrease lateral grip for a more playful behavior.

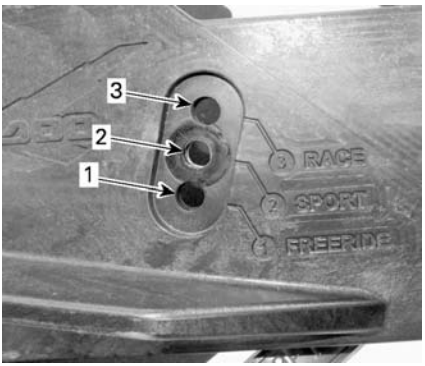

smo2012-003-027_a

1. *Freeride*
2. *Sport (factory setting)*
3. *Race*

How to Adjust Sponson

NOTE: It is highly recommended to have this adjustment carried out by your Sea-Doo dealer.

Remove and DISCARD the 5 self-adhesive screws.

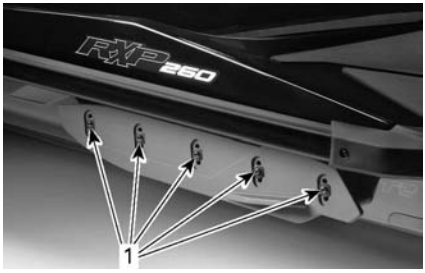

smo2012-003-018_b

1. *Self-adhesive screws*

Reposition sponson to desired position.

Install NEW self-adhesive screws and torque to specification.

⚠ WARNING

Whenever the sponsons are adjusted, the self-adhesive screws must be replaced and torqued to specification. Otherwise, loss of sponson may occur which could cause a loss of control of the watercraft.

TIGHTENING TORQUE	
Sponson screws (P/N 250 000 572) (NEW SCREWS REQUIRED)	18 N•m ± 2 N•m (159 lbf•**in** ± 18 lbf•**in**)

Proceed the same way for the other side.

⚠ WARNING

Both sponsons must be installed and adjusted at the same height. Missing sponsons or improper adjustment will affect handling and stability, which could cause a loss of control of the watercraft.

14) Adjustable Trim Tabs (RXT-X aS)

The adjustable trim tabs change the bow attitude of the watercraft.

smo2012-002-010

RH SIDE - TRIM TAB

Trim Tab Adjustment Guideline

With properly adjusted trim tabs, the watercraft should have an neutral attitude, especially when riding in rough waters (waves or choppy water).

The trim tabs provide 5 different settings.

NOTE: When adjusting the trim tabs to a different setting than factory (0), the adjustable sponsons should be left to factory setting (Sport).

See table below for trim tab adjustment characteristics and effects, according to condition.

⚠ WARNING

After trim tab adjustment, always familiarize yourself with the new behavior of the watercraft.

TRIM TAB ADJUSTMENT GUIDELINE				
TRIM TAB POSITION	BOW ATTITUDE	WATER CONDITION	STEERING RESPONSE	PWC SPEED (CALM WATER)
+1 0 F -1 -2 -3	(+1) (-3)	(+1) (-3)	(-3) +	(-3) –

NOTE: F (0) = factory position.

How to Adjust Trim Tabs

Remove bolt and lock nut from link rod.

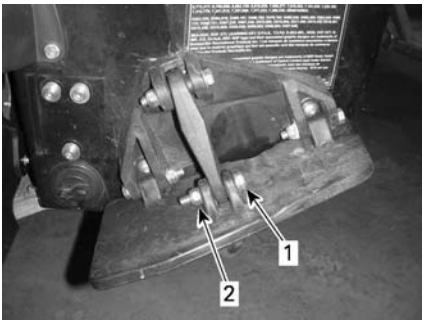

smo2012-002-010_a

1. *Bolt*
2. *Lock nut*

Adjust trim tab to desired position.

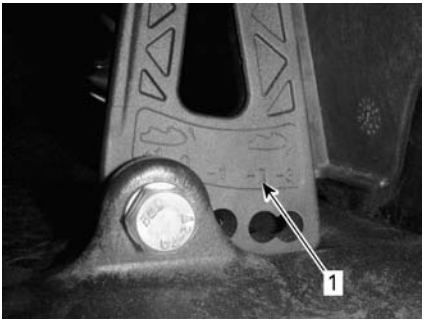

smo2012-002-012 _a

1. *Trim tab positions*

Install a NEW lock nut and tighten to specification.

⚠ WARNING

Locking devices when removed must be replaced.

TIGHTENING TORQUE	
Link rod lock nut	13 N•m ± 1 N•m (115 lbf•**in** ± 9 lbf•**in**)

Proceed the same way for the other side.

⚠ WARNING

Both trims tabs must be adjusted at the same height. Improper adjustment will affect handling and stability, which could cause a loss of control of the watercraft.

15) Bow Stabilizer (RXT-X aS)

The bow stabilizers located on each side of the hull gives the following benefits in rough water conditions:

– Reduce bow diving
– Better hull tracking
– Diminish splash.

16) Ski/Wakeboard Post (WAKE Pro model)

Pull up on the knob to extend the post. Ensure both sections of post are fully extended and properly locked before attaching ski or wakeboard rope.

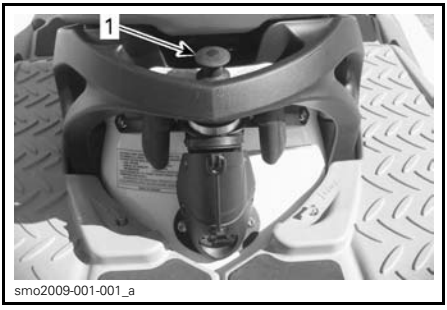

smo2009-001-001_a

TYPICAL - SKI/WAKEBOARD POST RETRACTED

1. *Pull on this knob to extend*

smo2009-001-002

SKI/WAKEBOARD POST EXTENDED

To retract the post, push straight down on the top of the post.

If the post becomes difficult to extend or retract, simultaneously push in on both sides of the locking clip toward front of watercraft.

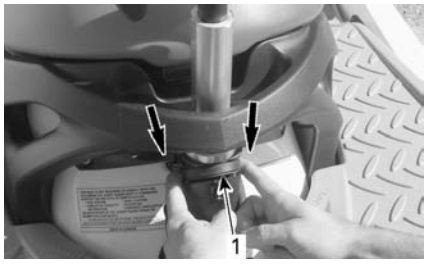

smo2009-001-003_a

PUSH TOWARD FRONT TO UNLOCK AND REMOVE POST
1. Locking clip

⚠ WARNING

Make sure ski/wakeboard post is fully extended and locked before use. Completely retract and lock when not used. Use caution with skier/wakeboarder in tow as tow rope may backlash to watercraft when released. Never perform a sharp turn when towing a skier, wakeboarder or any toy. . Always store tow rope when not in use.

NOTICE **The ski/wakeboard post is designed for towing a skier or wakeboarder with a maximum gross weight of 114 kg (250 lb).**

Always have one person other than the operator as an observer.

NOTE: The handles on the ski/wakeboard post are provided as a handhold for the observer.

NOTICE **Never use the ski/wakeboard post to tow other watercrafts. Respect the maximum load limit rating of the ski/wakeboard post. Overloading can affect maneuverability, stability and performance.**

17) Wakeboard Rack (WAKE Pro model)

A convenient removable rack to carry a wakeboard on the watercraft when on the water.

NOTE: The wakeboard rack can be installed on the LH side of the watercraft.

To install:

1. Insert the hooks on the lower portion of the rack into the lower retaining bracket located on the hull under the LH side bumper.

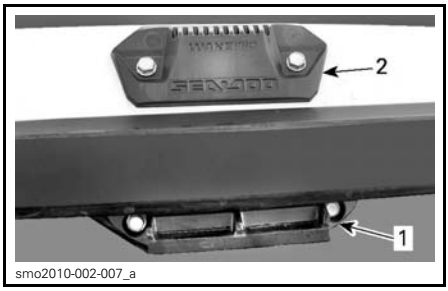

smo2010-002-007_a

RETAINING BRACKETS FOR WAKEBOARD RACK
1. Lower retaining bracket
2. Upper retaining bracket

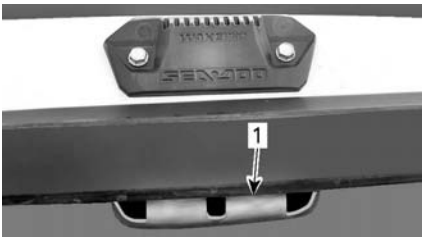

smo2010-002-009_a

1. Hooked portion of rack in lower bracket

2. Rotate the rack upwards and push the top of the rack inboard until the handle locks into the top retaining bracket.

⚠ WARNING

If rack is not properly secured on the watercraft, it could become loose and detach unexpectedly, creating a risk of injury to people nearby. Periodically ensure the rack is properly locked on its support.

3. When installing a wakeboard on the rack, position wakeboard fin(s) outward with the heel of the boots facing down near freeboard of the PWC.
4. Secure wakeboard using bungee cords.

⚠ WARNING

To avoid possible injuries and cuts from the wakeboards fin(s), always place FIN(S) OUTWARDS.

smo2010-002-008

WAKEBOARD INSTALLED WITH FINS OUTWARD

5. After installation, pull and push wakeboard to ensure it is tightly secured to rack.

⚠ WARNING

If the wakeboard is not properly secured on the rack, it could become loose and detach unexpectedly, creating a risk of injury to people nearby. To avoid:

- **Inspect bungee cords condition and replace if damaged.**
- **Secure wakeboard properly on rack.**
- **Periodically ensure the board is properly attached.**

NOTE: When the wakeboard is removed from its rack, secure the bungee cords so that they will not move freely when riding watercraft.

NOTICE **The rack is designed to hold one wakeboard. Do not use to hold more than one wakeboard or to transport skis or any other object. Do not use rack(s) as mooring points or to reboard.**

⚠ WARNING

With wakeboard and/or rack installed, operate with extra caution:

- **NEVER perform aggressive maneuvers including a spin-out.**
- **NEVER jump waves.**
- **Use common sense and limit speed.**

Otherwise, the wakeboard could detach or occupants could fall off and injure themselves against the wakeboard or rack.

⚠ WARNING

When trailering the watercraft, NEVER leave a wakeboard installed on the rack. Otherwise, wakeboard fin(s) could cause injury to bystanders or wakeboard could fly off on the road. The bungee cords are under tension and could spring back and whip someone when released. Use caution.

To remove the wakeboard rack, depress the lever at the top of the rack and remove it from its retaining brackets.

smo2010-002-010_a

WAKEBOARD RACK REMOVAL
1. *Press this handle to release wakeboard rack*

18) Steering Tilt Handle

The handlebar position can be adjusted to suit rider preferences.

To perform this adjustment, pull on the release handle at the base of the steering column just ahead of the glove box, and tilt the handlebars to the desired position.

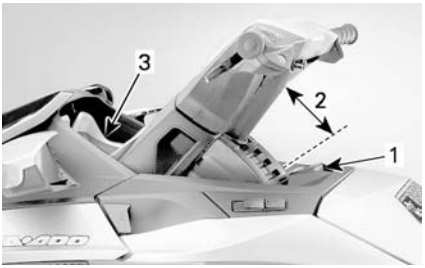

sdd2009-001-088_a

TYPICAL
1. *Release handle*
2. *Available tilt adjustment*
3. *Multifunction gauge*

When the handlebars are at the desired position, release the latch handle and ensure the latch pawl properly engages a groove in the steering column. Also ensure the latch handle is in the forward position.

⚠ WARNING

To prevent sudden movement of the steering column, always ensure the pawl on the steering column latch is properly engaged in one of the grooves on the steering column.

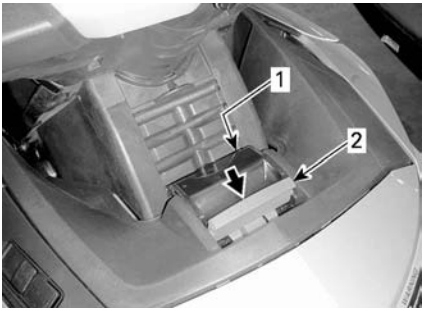

smo2009-002-116_a

STEERING COLUMN ADJUSTMENT LATCH NOT SECURED
1. *Latch pawl engaged in steering column groove*
2. *Release handle unlocked*

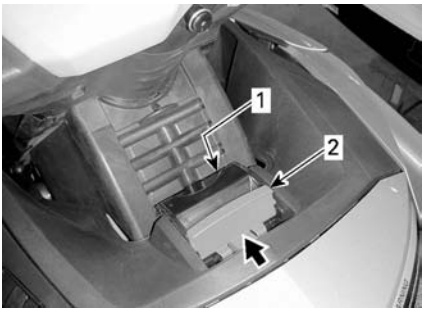

smo2009-002-117_a

STEERING COLUMN ADJUSTMENT LATCH PROPERLY SECURED
1. *Latch pawl engaged*
2. *Release handle locked forward*

19) Adjustable Ergonomic Steering (AES) (RXT-X/RXT-X aS)

The handlebar width and angular position of the controls may be adjusted to driver preference by extending and rotating the handlebar extension tubes.

NOTE: To carry out the ergonomic adjustments, see an authorized Sea-Doo dealer.

smo2010-002-006_c

ERGONOMIC ADJUSTMENTS
1. *Handlebar width adjustment*
2. *Angular position adjustment of controls*

iS (intelligent Suspension) (GTX Limited iS)

The intelligent suspension system (iS), allows the moving deck to move independently of the fixed deck, isolating rider and passenger(s) from the impact of rough water.

⚠ WARNING

Although the suspension system absorbs part of the vertical forces and therefore reduces the impact force to the body, it cannot eliminate it completely. To prevent you and your passenger from being bounced and eventually ejected from the watercraft, reduce your speed.

⚠ WARNING

Avoid riding in very rough waters or practicing extreme maneuvers like jumping wakes or waves.

The iS system provides multiple modes of operation.

Automatic Suspension Mode

The system always starts up in AUTOMATIC SUSPENSION mode and shuts down in DOCK mode.

The suspension will automatically move up to a factory preset height. This height is ideal for most riding conditions at cruising speeds.

The iS system constantly monitors the stroke of the suspension and automatically compensates for changing water conditions and passenger load.

The moving deck height proportionally elevates the center of gravity of the watercraft.

NOTE: When performing certain maneuvers at low speed the watercraft's propensity to overturn can increase.

Manual Suspension Mode

MANUAL SUSPENSION mode allows fine-tuning the suspension calibration to the operator's preference. The SUSPENSION HEIGHT can be adjusted using the UP or DOWN button while in IS MODE.

SUSPENSION HEIGHT can be adjusted a total of nine increments.

NOTE: Changing the suspension height using the UP/DOWN buttons puts the iS system in MANUAL SUSPENSION mode. The AUTO mode is deactivated.

Manually Adjusting Ride Height

While in IS MODE, press the UP or DOWN button once to move the suspension to the next height increment, or press and hold the button until the desired ride height is obtained.

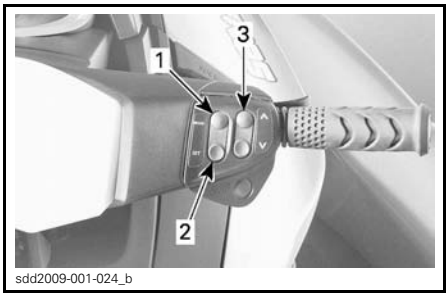

TYPICAL
1. *MODE*
2. *SET*
3. *UP and DOWN button*

The following indications of manual suspension mode can be observed in the digital screen of the information center:

– A scrolling message in the digital screen that states MANUAL SUSPENSION.
– The AUTO indication in the iS display will disappear.
– The suspension position indicator will indicate the relative SUSPENSION HEIGHT (only one segment of the indicator will be on).

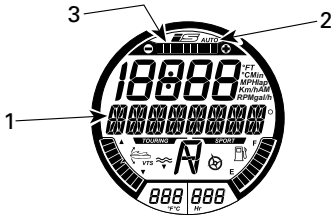

AUTOMATIC SUSPENSION MODE

1. MANUAL SUSPENSION message is displayed here
2. AUTO mode indicator OFF
3. Relative suspension position indication

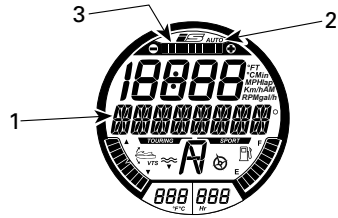

AUTOMATIC SUSPENSION MODE

1. AUTOMATIC SUSPENSION message is displayed here
2. AUTO mode indicator ON
3. All segments of suspension position indicator ON

Reverting Back to AUTO MODE

To revert back to AUTO selection mode without stopping the engine, proceed as follows:

– Press the MODE button repeatedly until the IS MODE message appears in the multifunction display.
– Press the SET button.
– A scrolling message in the multifunction display stating DOUBLE_CLICK_UP_FOR_AUTO_MODE appears.
– Double click on UP button.

The AUTO mode is confirmed by:

– A scrolling message in the digital screen stating AUTOMATIC SUSPENSION.
– The AUTO indication in the iS display will appear.
– All segments of the suspension position indicator will be on.

Dock Modes

The iS system can be set to DOCK MODE AUTO or DOCK MODE OFF.

Dock Mode AUTO

In DOCK MODE AUTO, the suspension lowers to DOCK mode height to lower the center of gravity when certain conditions are met.

– When the engine is shut down after normal operation of the watercraft.
– If O.T.A.S. is activated *SEE ACTIVE TECHNOLOGIES (iCONTROL)*.
– If the operator releases the throttle to idle RPM for approximately 10 seconds.

NOTE: When the suspension moves down to dock mode height, a DOCK MODE ON message will scroll across in the multifunction display.

Dock Mode OFF

If the suspension is set to DOCK MODE OFF, the suspension will not lower itself to DOCK mode height when the throttle is released to idle for more than ten seconds. However, it will lower itself automatically when:

– The engine is shut off
– When O.T.A.S. is activated.

If the suspension is in the up position with the watercraft powered up and the DOWN button is double clicked while in the IS MODE, the suspension will lower itself to DOCK mode height even if the suspension is set to DOCK MODE OFF.

If the suspension is in the down position (dock mode height) with the watercraft powered up and the UP button is double clicked while in the IS MODE, the suspension will move up to the factory preset height.

⚠ WARNING

When performing certain maneuvers at low speed or when docking, the watercraft's propensity to overturn can increase. The more riders (or weight) on the moving deck, the more unstable the watercraft may become.

NOTE: DOCK MODE AUTO is always active when using a learning key.

Selecting DOCK MODE AUTO or DOCK MODE OFF

Selecting DOCK MODE AUTO or DOCK MODE OFF is only available when the engine is not running and when using a normal key.

To change the DOCK mode of operation, carry out the following steps.

1. Press the START/STOP button to power up the information center.
2. Install the tether cord on the engine cut-off switch.
3. Press the MODE button repeatedly until SETTINGS is displayed in the Information Center.

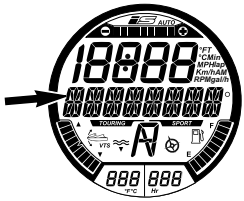

MESSAGE DISPLAYED
SETTINGS

4. Press the SET button to display DOCK MODE.

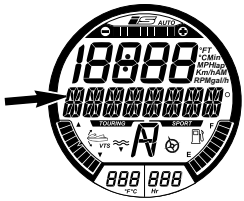

FIRST AVAILABLE MODE OPTION
DOCK MODE message is displayed here

5. Press the SET button to display DOCK MODE AUTO.

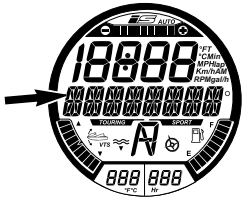

MODE ACTIVATED
DOCK MODE AUTO message is displayed here

6. Press the UP or DOWN button to toggle the display to DOCK MODE OFF.

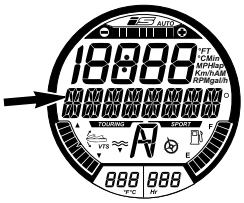

MODE DEACTIVATED
DOCK MODE OFF message is displayed here

7. Press the SET button, or wait for the function to time out to save the setting and return to main display.

You may now start the engine and drive away using the selected DOCK MODE.

CAUTION Operating the watercraft in DOCK MODE OFF prevents the suspension from automatically moving to the "down" position when operating the watercraft at slow speed or when stopping. This maintains a higher center of gravity, reduces stability, and makes the watercraft more prone to overturning.

aS (adjustable Suspension) (RXT-X aS)

The adjustable Suspension (aS) allows the moving deck to move independently of the fixed deck, isolating rider and passenger from the impact of rough water.

With the aS feature, the moving deck may be adjusted mechanically to absorb (dampen) water shocks according to the driver riding style and water conditions.

WARNING

Although the suspension system absorbs part of the vertical forces and therefore reduces the impact force to the body, it cannot eliminate it completely. To prevent you and your passenger from being bounced and eventually ejected from the watercraft, reduce your speed.

WARNING

Avoid riding in very rough waters or practicing extreme maneuvers like jumping wakes or waves.

Spring Preload Adjustment

The spring preload can be easily adjusted using a 1/2" drive nut (adjuster).

The spring preload adjuster is located under the seat.

RIDERS TOTAL WEIGHT (KG/LBS)	NBR OF CLICKS ON SPRING ADJUSTER (CLOCKWISE*)
57 kg (126 lb)	0
73 kg (161 lb)	2
89 kg (196 lb)	4
105 kg (231 lb)	6
120 kg (265 lb)	8
136 kg (300 lb)	10
152 kg (335 lb)	12
168 kg (370 lb)	14
184 kg (406 lb)	16
200 kg (441 lb)	18
* 0 is set at fully unscrewed position (counterclockwise).	

Damping Adjustment

The aS Suspension damping may be personally adjustable according to the driving preferences and water conditions.

Damping adjustment is carried out via the remote nitrogen reservoir in the glove box.

A blue knob located in glove box allows damper adjustment for this purpose.

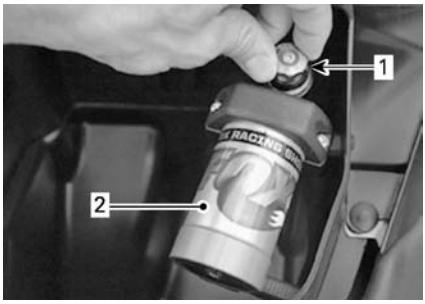

smo2011-002-006_a

1. *Blue knob*
2. *Nitrogen gas damper*

TYPICAL CONDITIONS	NBR OF CLICKS ON DAMPER ADJUSTER (CLOCKWISE*)
Calm water	0
	5
Rough water	10
	15
Offshore	20
* 0 is set at fully unscrewed position (counterclockwise).	

NOTE: These adjustments are provided as guidelines to ensure optimum suspension performance. Personal preference may dictate different settings than those recommended.

S (Manual Suspension) (GTX S 155)

The Manual suspension (S) allows the moving deck to move independently of the fixed deck, isolating rider and passenger from the impact of rough water.

The moving deck may be adjusted mechanically to absorb (dampen) water shocks according to the driver's weight.

⚠ WARNING

Although the suspension system absorbs part of the vertical forces and therefore reduces the impact force to the body, it cannot eliminate it completely. To prevent you and your passenger from being bounced and eventually ejected from the watercraft, reduce your speed.

⚠ WARNING

Avoid riding in very rough waters or practicing extreme maneuvers like jumping wakes or waves.

Spring Preload Adjustment

The spring preload can be easily adjusted using a 1/2" drive nut (adjuster).

The spring preload adjuster is located under the seat.

RIDERS TOTAL WEIGHT (KG/LBS)	NBR OF CLICKS ON SPRING ADJUSTER (CLOCKWISE*)
68 kg (150 lb)	0
79 kg (174 lb)	2
90 kg (198 lb)	4
102 kg (225 lb)	6
113 kg (249 lb)	8
125 kg (276 lb)	10
136 kg (300 lb)	12
147 kg (324 lb)	14
159 kg (351 lb)	16
170 kg (375 lb)	18
* 0 is set at fully unscrewed position (counterclockwise).	

Operation During Break-In Period

A break-in period of 10 operating hours is required before running the watercraft at sustained full throttle.

During this period, maximum throttle should not exceed 1/2 to 3/4 opening. However, brief full acceleration and speed variations contribute to a good break-in.

NOTICE **Continued wide open throttle accelerations or operation, prolonged cruising speeds are detrimental during the break-in period.**

NOTE: 215, 260 and 300 engines: During the first 5 hours of operation, the engine management limits the engine maximum speed for engine protection. The engine performance will progressively increase during this period.

⚠ WARNING

Always perform the *PRE-RIDE INSPECTION* before operating this watercraft. Be sure to read the *SAFETY INFORMATION* and the *WATERCRAFT INFORMATION* sections and be thoroughly familiar with the iControl technology.

Should any control or instruction not be fully understood, refer to an authorized Sea-Doo dealer.

Boarding the Watercraft

As with any watercraft, boarding should be done carefully and engine must not be running.

⚠ WARNING

Engine must be OFF when boarding the watercraft or when using the boarding step.

Boarding from a Dock

When boarding from a dock, slowly place one foot on the watercraft footboard nearest the dock while holding the handlebar, and at the same time, transfer the body weight to the other side in order to balance the watercraft.

Then bring the other foot over the seat and place it on the other footboard. Push the watercraft away from the dock.

F18A01Y

Boarding from Shallow Water

In shallow water, board the watercraft from either the side or the rear.

⚠ WARNING

- Keep limbs away from jet or intake grate.
- Never use propulsion system as a supporting point to board the watercraft.

Ensure there is at least 90 cm (3 ft) of water underneath the lowest rear portion of the hull.

Take into account that the hull will be lower in the water when all passengers are aboard. Be certain to maintain the specified depth so sand, pebbles and rocks will not be drawn up in the jet pump.

F18L0XY

A. Maintain at least 90 cm (3 ft) underneath the lowest rear portion of the hull when all passengers are aboard

NOTICE

- Starting the engine or riding the watercraft in shallower water may damage the impeller or other jet pump components.
- Stay on center of the step.
- Only one person at a time on the step.

⚠ WARNING

Watercraft with iBR system:

- Be aware of the iBR gate movement when starting the engine, shutting down the engine or using the iBR lever. Automatic movement of the gate may squeeze fingers or toes of people taking a hold on the back or your PWC.
- Never use iBR gate as a supporting point to board the watercraft.

Boarding in Deep Water

⚠ WARNING

- Keep limbs away from propulsion system or intake grate.
- Never use propulsion systems a supporting point to board the watercraft.
- Inexperienced riders should practice how to board the watercraft close to shore (all methods explained here) before venturing into deep water.

⚠ WARNING

Watercraft with iBR system:

- Be aware of the iBR gate movement when starting the engine, shutting down the engine or using the iBR lever. Automatic movement of the gate may squeeze fingers or toes of people taking a hold on the back or your PWC.
- Never use propulsion system or iBR gate as a supporting point to board the watercraft.

Operator Alone

Models Without a Boarding Step

1. Using one hand, grab the rear handle.
2. With the other hand on the boarding platform, lift your body until you can lay one knee on the boarding platform.
3. Lay the other knee on the boarding platform.

smo2009-002-144

4. Take hold of the seat strap to help maintain your balance and step forward onto the footboards on either side of the seat.

smo2009-002-145

Sit astride the seat.

Models with a Boarding Step

Swim to the rear of the watercraft.

Using one hand, lower the boarding step.

smo2009-002-140

Using the other hand, take hold of the edge of the boarding platform, then pull yourself up so that you can knee onto the boarding step.

smo2009-002-141

NOTICE

- Stay on center of the step.
- Only one person at a time on the step.

Reach forward with one hand and take hold of the molded handle behind the seat, then stand on the boarding step.

smo2009-002-142

With both hands on the handle behind the seat, step up onto the boarding platform.

smo2009-002-143

smo2009-002-144

Take hold of the seat strap to help maintain your balance and step forward onto the footboards on either side of the seat.

smo2009-002-145

Sit astride the seat.

Operator with a Passenger

The operator climbs on the watercraft in the same way as explained previously.

In choppy water, while in the water, the passenger may hold the watercraft steady to help the operator climb aboard.

smo2009-002-146

NOTICE

- Stay on center of the step.
- Only one person at a time on the step.

The passenger then climbs onto the watercraft while the operator maintains balance by sitting as close as possible to the console.

smo2009-002-147

TYPICAL - MODEL WITH BOARDING STEP SHOWN

smo2009-002-148

TYPICAL - MODEL WITH BOARDING STEP SHOWN

smo2009-002-149

smo2009-002-150

How to Start Engine

⚠ WARNING

Before starting the engine, the operator and passenger(s) should always:
- **Be properly seated on the watercraft.**
- **Have a firm grip on a handhold or hold on to the waist of the person in front of them.**
- **Wear appropriate protective clothing including a PFD approved by local authorities and a wet suit bottom.**

NOTICE **Ensure there is at least 90 cm (3 ft) of water under the lowest rear portion of the hull when all passengers are aboard prior to starting the engine. Otherwise damage to the impeller or other jet pump components may occur.**

1. Attach the tether cord clip to your PFD or to the wrist (wrist strap required).
2. Firmly grip handlebar with your left hand and place both feet on the footboards.
3. Press the engine START/STOP button to wake up the electrical system.
4. As the information center cycles through its self test function, install the tether cord on the engine cut-off switch.

⚠ WARNING

The tether cord should always be attached to the operators personal flotation device or to the wrist (wrist strap required) when starting or operating the watercraft.

5. Depress the START/STOP button to start the engine.

NOTE: The START/STOP button must be activated within 5 seconds after the tether cord cap is installed on the engine cut-off switch to allow engine starting.

NOTICE **In the event the engine does not start right away, do not hold START/STOP button more than 10 seconds to avoid starter overheating. A rest period should be observed between the cranking cycles to allow the starter to cool down. Refer to *TROUBLESHOOTING* section.**

6. Release engine START/STOP button after engine is started.

⚠ WARNING

The tether cord should always be attached to the operators personal flotation device when starting or operating the watercraft.

NOTE: The tether cord must be installed on the engine cut-off switch within 5 seconds of pressing the START/STOP button to allow engine starting. If you hear anything other than 2 short beeps when installing the tether cord, it indicates a condition that should be corrected. Refer to the *TROUBLESHOOTING* section for BEEP code signal identification.

NOTE: The engine can be restarted within 3 minutes when stopped using the START/STOP button. After this delay, resume the starting procedure.

How to Stop the Engine

⚠ WARNING

To maintain watercraft directional control, the engine should be running until the watercraft is stopped.

To shut off the engine, press the engine START/STOP button or pull off the tether cord cap from the engine cut-off switch.

⚠ WARNING

Never leave the tether cord on the engine cut-off switch when disembarking watercraft to prevent theft, accidental engine starting, and to avoid unauthorized use by children or others.

If the engine is shut off using the START/STOP button and the tether cord is left on the engine cut-off switch, the information center and all electrical power will shut off after approximately three minutes to prevent battery discharge.

How to Steer the Watercraft

F18J09Y

Turning the handlebar pivots the jet pump nozzle which controls the watercraft direction. Turning the handlebar to the right will turn the watercraft to the right and inversely. The throttle should be applied to turn the watercraft.

⚠ WARNING

Throttle should be applied and handlebar turned to change the direction of the watercraft. Steering efficiency will differ depending on the amount of throttle applied, the number of passengers, the load, the water conditions and the environmental factors such as the wind.

Unlike a car, a watercraft needs some throttle to turn. Practice in a safe area applying the throttle and turning away from an imaginary object. This is a good collision avoidance technique.

⚠ WARNING

Directional control is reduced when the throttle is released and lost when the engine is off.

The watercraft behaves differently with a passenger and requires greater skill. The passenger(s) should always grip the seat strap, the molded grab handle, or the waist of the person ahead of them. Reduce speed and avoid sharp turns. Avoid choppy water conditions when carrying a passenger.

Tight Turns and Other Special Maneuvers

Any tight turns or special maneuvers that will cause the air inlet openings to be kept under water for a prolonged time, water will seep into the bilge.

Combustion engines need air to operate; consequently this watercraft cannot be totally watertight.

NOTICE **If the air inlet openings are kept under water, such as turning constantly in tight circles, plunging the bow through waves, or capsizing the watercraft, water may seep into the bilge, which may cause severe damage to internal parts of the engine. Refer to the *WARRANTY* section contained in this guide.**

O.T.A.S. System (Off-Throttle Assisted Steering)

The O.T.A.S. (Off-Throttle Assisted Steering) system provides additional maneuverability in off-throttle situations.

If the driver releases the throttle to idle when initiating a full turn, the O.T.A.S. system will be electronically activated. O.T.A.S. will slightly increase engine speed to help turning.

When the handlebar is brought back towards its center position, the throttle reverts to idle.

We recommend that you familiarize yourself with this feature during your first ride.

How to Engage Neutral

⚠ WARNING

The drive shaft and impeller are always turning when the engine is running, even when the iBR gate is set to the neutral position. Keep away from the propulsion system of the watercraft.

When the watercraft is first started, the iBR system automatically sets the iBR gate to the neutral position by default.

If the gate is in forward thrust position, tap the iBR lever. The gate will move to neutral.

If braking or reverse is used, the iBR gate will move to the neutral position when the iBR lever is released, if throttle is not applied.

NOTE: The throttle lever must be fully released for the iBR gate to move to the neutral position when the iBR lever is released.

If the engine is stopped in forward or reverse, the iBR gate will move to the neutral position on engine shutdown.

How to Trim the Neutral Position of the iBR

When in NEUTRAL, if the watercraft creeps forward or backward, the iBR system may be trimmed.

NOTE: Movement of the watercraft when operating in neutral may be due to wind or water current.

If the watercraft is moving forwards, momentarily press the VTS DOWN button or DOWN button (if vehicle is not equipped with VTS switch).

If the watercraft is moving backwards, momentarily press the VTS UP button or UP button (if vehicle is not equipped with VTS switch).

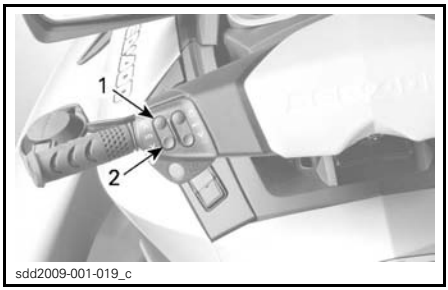

TYPICAL - VTS CONTROL BUTTON
1. *Bow up*
2. *Bow down*

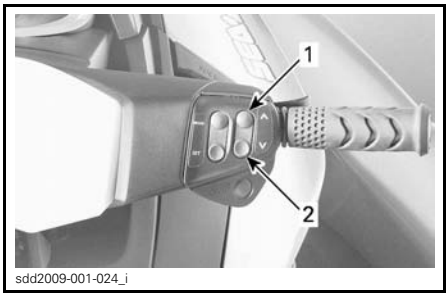

TYPICAL - TRIMMING THE iBR NEUTRAL POSITION
1. *UP button (to stop rearward movement)*
2. *DOWN button (to stop forward movement)*

NOTE: Press the VTS UP/DOWN button or UP/DOWN button (if vehicle is not equipped with VTS switch) repeatedly until proper adjustment of the neutral position is attained and the watercraft stops moving.

How to Engage Forward

To engage forward thrust from neutral, tap on the throttle lever. The gate will move to forward thrust position and the watercraft will accelerate forward.

To engage forward thrust from reverse, release the iBR lever while applying throttle moderately.

To re-engage forward thrust from braking, simultaneously pull in the throttle lever while releasing the iBR lever. The watercraft will accelerate forward after a short delay.

How to Engage and Use Reverse

Reverse can only be engaged between idle speed and the threshold forward speed of 14 km/h (9 MPH).

To engage reverse thrust, the iBR lever on the LH handlebar must be pulled in at least 25% of the lever travel.

When operating the iBR lever in reverse mode, the throttle lever can be used to control engine RPM, and thus the amount of reverse thrust produced.

By modulating both the iBR and throttle levers simultaneously, reverse thrust can be more precisely controlled. Too much RPM will create water turbulence and reduce reverse efficiency.

NOTE: Engine power will be reduced to idle whenever the iBR lever position is changed.

Release the iBR lever to end reverse operation.

To stop rearward velocity after iBR lever release, apply enough throttle to stop rearward movement.

⚠ WARNING

The brake function has no effect when travelling in reverse.

Available engine power is limited in reverse mode, which limits reverse speed. However, speeds above 14 km/h (9 MPH) may be obtained in reverse depending on conditions.

⚠ WARNING

Only use reverse at slow speed and for the shortest time possible. Always ensure the path behind is clear of objects, obstacles and people.

When operating in reverse, turn the handlebar in the opposite direction that you want to move the rear of the watercraft.

For example, to steer the rear of the watercraft to port (left), turn the handlebar to starboard (right).

TYPICAL - STEERING DIRECTION REVERSED WHEN BACKING

CAUTION Steering direction in reverse thrust is opposite of forward thrust. To steer the stern to port (left) in reverse, turn the handlebar to starboard (right). To steer the stern to starboard (right), turn the handlebar to port (left). Reverse thrust operation should be practiced in open waters in order to become fully familiar with the controls and watercraft handling characteristics before operating in close quarters.

How to Engage and Use Braking

WARNING

- The engine must be running to be able to use the brake.
- The brake is only applicable when operating in forward movement, it has no effect on rearward velocity.
- The brake cannot prevent your PWC from drifting due to current or wind.

The braking function can only be engaged during forward operation at or above the threshold speed of 14 km/h (9 MPH).

Braking is engaged and controlled when the iBR lever on the LH handlebar is pulled in at least 25% of its travel.

WARNING

Braking should be practiced in open waters and at gradually increasing speeds in order to become fully familiar with the controls and watercraft handling characteristics.

When iBR lever is applied, the throttle lever command is overridden and engine throttle control is now dependant on the iBR lever position. Braking can thus be modulated by using only the iBR lever.

Watercraft deceleration is proportional to the braking force. The more the iBR lever is pulled in, the greater the braking force applied.

NOTE: Be careful to gradually actuate the iBR lever to adjust intensity of the braking force and simultaneously release the throttle lever.

CAUTION When braking, riders must brace themselves against the deceleration force to prevent from moving forward on the watercraft and losing balance. The operator should always keep both hands on the handlebars, and all passengers should maintain a firm grip of a handhold or the waist of the person in front of them.

WARNING

Stopping distance will vary depending on initial speed, load, wind, number of riders, water conditions, and the amount of braking power commanded by the operator. Always adjust your riding style accordingly.

When the watercraft slows to less than 14 km/h (9 MPH), braking mode ends and reverse mode is engaged. Release the iBR lever once the watercraft is stopped. Otherwise, a rearward movement will be initiated.

CAUTION As the watercraft slows to a stop, the wake created by the watercraft will catch up and tend to push the watercraft forward. Ensure there are no obstacles or bathers in the direction of travel.

If the throttle lever is still pulled in when releasing the iBR lever, the watercraft will accelerate forward after a short delay. Acceleration will be proportional to the throttle lever position.

⚠ WARNING

If forward acceleration is not desired when the brake lever is released, release the throttle lever.

When at speed and the brake is first applied, a plume of water will shoot up in the air behind the watercraft which may cause the operator of a following watercraft to momentarily loose sight of your PWC.

⚠ WARNING

- **It is important to inform the operator of a watercraft who intends to follow in a convoy formation, of the braking and maneuvering capability of your PWC, what the plume of water indicates, and that a greater distance must be maintained between watercrafts.**
- **Be aware that other boats following or operating in close proximity may not be able to stop as quickly.**

Braking in a Turn

Throttle must be applied for turning to ensure directional control. However braking can be initiated during a turn using the iBR lever as previously described. Get ready to maintain your balance while the wake is crossing your PWC.

⚠ **CAUTION** **As the watercraft slows to a stop while braking in a turn, the wake created by the watercraft will catch up and tend to push the watercraft sideways. Be prepared to maintain balance as the wake crossed the watercraft.**

How to Use the Variable Trim System (VTS)

The variable trim system (VTS) changes the vertical position of the jet pump nozzle to provide the operator with a fast, effective system to compensate for load, thrust, riding position and water conditions. Correctly adjusted, it can improve handling, reduce porpoising, and position the watercraft at its best riding attitude to attain maximum performance.

When first using the watercraft, the operator should become familiar with the use of the variable trim system (VTS) at varying speeds and water conditions. A mid-range trim is generally used when cruising. Experience alone will dictate the best trim for the conditions. During the watercraft break-in period, when lower speeds are recommended, it is an excellent opportunity to become familiar with trim adjustment and its effects.

When the nozzle is positioned in an upward angle, the water thrust directs the bow of the watercraft upward. This position is used to optimize high speed.

When the nozzle is directed downward, the bow is forced downward and increases the watercraft turning capabilities. As with any watercraft, speed and operator body position and movement (body English), will determine the degree and sharpness of the watercraft turn. Porpoising can be reduced or eliminated if the nozzle is downward and speed is adjusted proportionately.

NOTE: VTS position is indicated on a bar gauge in the information center.

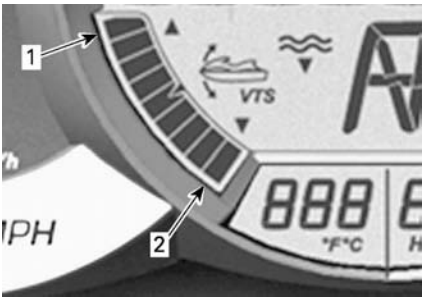

sdd2009-001-042_a

INFORMATION CENTER — VTS POSITION INDICATOR
1. Bow up
2. Bow down

The VTS system allows for manually adjusting the trim position of the nozzle, or selecting two preset trim positions and recording or changing preset trim positions on certain models.

VTS Trimming Methods

AVAILABLE VTS TRIMMING METHODS	GTX GTX S 155	GTX LIMITED GTX LIMITED iS	RXT RXT-X RXT-X aS	WAKE PRO
VTS trim button	N.A.	X	X	X
VTS "double click" trimming	N.A.	X	X	X
VTS "presets"	N.A.	X	X	X
VTS trimming through multifunction gauge	X	N.A.	N.A.	N.A.
X = Indicates a **standard** feature N.A. = Not Available				

Trimming the VTS Using the VTS Button

Nine trim positions are available.

With the watercraft operating in forward thrust, proceed as follows.

NOTE: Pressing the VTS trim button without the engine in forward thrust will only change the indication. The nozzle will move to the selected VTS trim position when forward thrust is engaged.

1. Press the VTS UP button once to trim the bow of the watercraft up to the next up trim position.
2. Press the VTS DOWN button once to trim the bow of the watercraft down to the next down trim position.

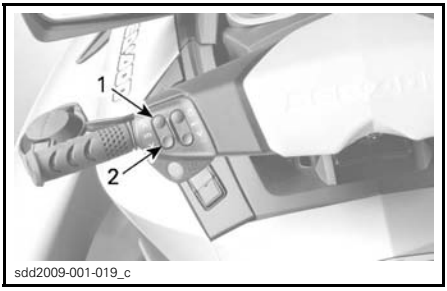

TYPICAL - VTS CONTROL BUTTON
1. *Bow up*
2. *Bow down*

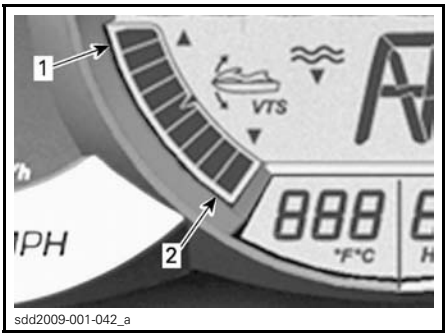

INFORMATION CENTER — VTS POSITION INDICATOR
1. *Bow up*
2. *Bow down*

NOTE: If the VTS UP or Down button is pressed and held, the pump nozzle will keep moving until the button is released at the desired trim attitude or the maximum trim position (up or down) is reached.

Using Preset Trim Positions

Two preset trim positions can be selected.

To select the highest trim position recorded, double-click on the VTS UP button (bow up).

To select the lowest trim position recorded, double-click on the VTS DOWN button (bow down).

NOTE: If only one preset trim position is recorded, double-click either UP or DOWN of the VTS button.

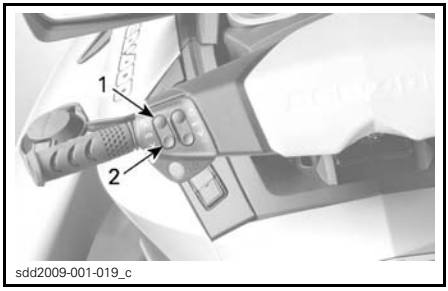

TYPICAL - DOUBLE-CLICK UP OR DOWN TO USE PRESET POSITIONS
1. *Highest preset position on UP button*
2. *Lowest preset position on DOWN button*

Recording Preset Trim Positions

Two different VTS trim positions may be recorded for quickly selecting the preferred watercraft trim attitude.

To record VTS preset trim positions:

1. Turn ON the electrical power by pressing the START/STOP button once.
2. Installing the tether cord on the engine cut-off switch.
3. On the RH handlebar, press the MODE button repeatedly until VTS MODE is displayed.

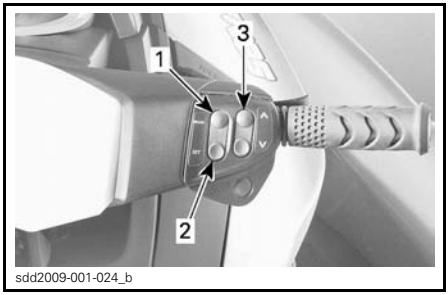

TYPICAL
1. *MODE button*
2. *SET button*
3. *UP/DOWN button*

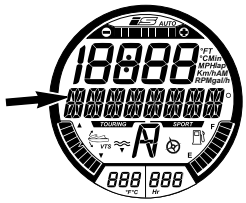

MESSAGE DISPLAYED
VTS MODE

4. On the RH handlebar, press the SET button to display PRESET 1.
5. Press the VTS UP or DOWN button to change the PRESET 1 VTS position. Gauge will display setting 1 through 9 in the digital screen above PRESET 1.

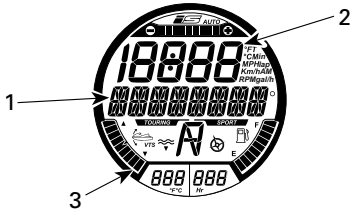

FUNCTION SELECTED - PRESET 1

1. PRESET 1 message
2. VTS setting number
3. VTS position indicator at setting 1 (bow down)

6. Press the SET button to save PRESET 1 and display PRESET 2.
7. Press the VTS UP or DOWN button to change the PRESET 2 VTS position. Gauge will display setting 1 through 9 in the digital screen above PRESET 2.

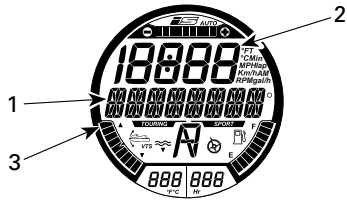

FUNCTION SELECTED - PRESET 2

1. PRESET 2 message
2. VTS setting number
3. VTS position indicator at setting 9 (bow up)

8. Press the SET button to save the settings and return to the main display.

The VTS system will compare the preset trim settings recorded, the highest position will be assigned to the UP button (bow up), the lowest to the DOWN button (bow down).

If both trim positions are identical, both buttons will have the same trim settings.

Trimming the VTS Using the Gauge

1. With the engine running in forward thrust, press the MODE button to display the VTS function in the multifunction display.
2. On the RH handlebar, press the UP or DOWN button to change the VTS setting.

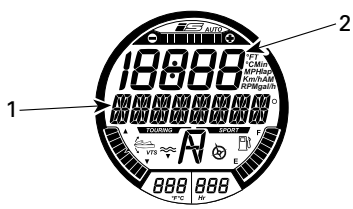

FUNCTION SELECTED - VTS

1. VTS message
2. VTS setting number

3. Confirm VTS operation by looking for the VTS position indicator movement in the digital display.
4. Press the SET button to save the desired setting and return to the main display.

NOTE: The available VTS settings are between 1 and 9.

NOTE: The VTS system cannot be fully tested without the engine operating in forward thrust. If the engine is not running in forward thrust, only the VTS indication will change when the VTS control switches are pressed; the nozzle will not change position.

General Operating Recommendations

Rough Water or Poor Visibility Operation

Avoid operation in these conditions. If you must do so, proceed with caution using minimum speed.

Crossing Waves

The operator must grip the handlebar firmly and keep both feet on the footboards.

The passenger must grip the handholds with both hands and keep both feet on the footboards.

Reduce speed.

Always be prepared to steer and maintain your balance as necessary.

When going over waves, raise your body slightly off the seat to absorb the shocks with your legs.

When crossing wakes, always keep a safe distance from watercraft ahead.

⚠ WARNING

When crossing wakes, slow down. Operator and passenger(s) should brace themselves and adopt a semi-standing position to help absorb the bumps. Do not jump waves or wakes.

NOTE: Some watercraft models are equipped with a suspension system (iS) that is capable of smoothing out the bumps when riding through rough water or a wake. Adopting a semi-standing position may be necessary in very rough water or large wakes. Operator should reduce speed as required to prevent loosing control of the watercraft, or prevent personnel from being ejected.

Stopping/Docking

When the throttle is released, the watercraft is slowed by water drag against the hull. The stopping distance will vary depending on the watercraft size, weight, speed, water surface condition, presence and direction of wind and current.

The iBR system can also be used for slowing down or for stopping more quickly, and for increasing maneuverability especially when docking.

F18A03Y

The operator should practice in open waters at various speeds to become familiarized with the stopping distances under different conditions. Stopping using the iBR system in a straight line and in a turn should be practiced extensively to become familiar with the handling characteristics of the watercraft under partial or full braking conditions.

⚠ WARNING

Always practice braking in open waters ensuring there are no watercrafts or boats in your immediate vicinity, especially astern. Other users of the waterways may not be able to maneuver or stop in time to avoid you should you unexpectedly come to a full stop in front of them.

When at speed and the brake is first applied, a plume of water will shoot up in the air behind the watercraft and may cause the operator of a following watercraft to momentarily loose sight of your PWC.

⚠ WARNING

It is important to inform the operator of a watercraft who intends to follow in a convoy formation of the braking and maneuvering capability of your PWC, what the plume of water indicates, and that a greater distance should be maintained between both of you.

The operator should also practice docking with an imaginary dock using the various controls available (iBR lever and throttle lever).

Release the throttle at a sufficient distance before the expected landing area.

Reduce speed to idle.

Maneuver using a combination of the iBR lever and throttle lever, shifting to neutral, reverse, or forward as required.

Remember that when operating in reverse, steering direction is reversed. Turning the handlebars to the left will move the stern to the right when backing up, and vice-versa.

⚠ WARNING

Directional control is reduced when the throttle is released and/or when engine is off. Steering direction is reversed when operating the watercraft in reverse.

Beaching

NOTICE **It is not recommended to run the watercraft to the beach.**

Drive slowly towards the beach and shut off the engine before the water is less than 90 cm (3 ft) deep under the lowest rear portion of the hull. Then pull the watercraft to the beach.

NOTICE Riding the watercraft in shallow water may result in damage to the impeller, iBR components, or other jet pump components. Always shut off the engine before water is less than 90 cm (3 ft) deep and never use reverse or braking.

F18A03Y

OPERATING MODES

OPERATING MODE AVAILABLE	GTX 155, GTX S 155	GTX LIMITED, GTX LIMITED iS	RXT	RXT-X aS, RXT-X	WAKE PRO
Touring mode	X	X	X	X	X
Sport mode	X	X	X	X	X
ECO mode	X	X	X	X	X
Cruise mode	X	X	X	-	X
Slow speed mode	X	X	X	-	X
Ski mode	-	-	-	-	X
Learning key mode	X	X	X	X	X

X = Indicates a **standard** feature
- = See a Sea-Doo dealer for availability.
N.A. = Not Available

Touring Mode

By default, the watercraft is set to TOURING mode of operation when started.

All Models Except RXT-X/RXT-X aS

A TOURING mode indicator is ON in the multifunction gauge to confirm the active mode of operation.

TOURING MODE INDICATOR (ALL MODELS EXCEPT RXT-X/RXT-X aS)

Sport Mode

When selected, SPORT MODE provides for instant throttle response and more rapid accelerations than TOURING MODE.

NOTE: Sport mode is not available if using a LEARNING key.

Once activated, SPORT MODE will remain active until it is deactivated by the operator, or the engine is shut down whereby it defaults back to TOURING MODE.

Activating Sport Mode

To quickly activate sport mode while riding at speed, carry out the following:

⚠ WARNING

When activating sport mode, be sure to maintain situational awareness of other watercrafts, obstacles, or persons in the water.

1. Depress and hold the SPORT button for at least 3 seconds.

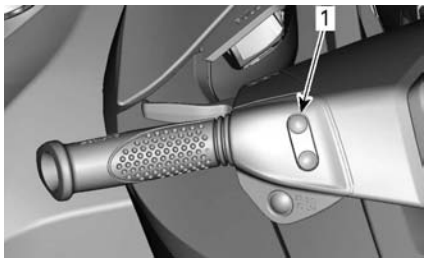

smo2012-002-009_a

TYPICAL
1. Sport button

The following message will be displayed:

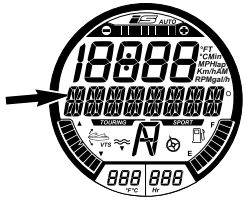

MESSAGE DISPLAYED
ENTERING SPORT MODE - INCREASED ACCELERATION - INSTRUCT PASSENGERS TO HOLD - PRESS_SPORT_BUTTON

⚠ WARNING

Ensure passengers are advised that sport mode provides for increased accelerations and that they are to hold on tightly.

2. Press the SET button again to activate sport mode.

A scrolling SPORT MODE ACTIVATED message will momentarily confirm that sport mode has been activated.

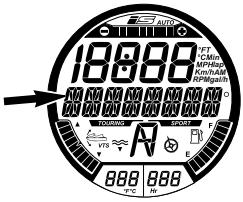

MESSAGE DISPLAYED
SPORT MODE ACTIVATED

NOTE: After a few seconds, the gauge will revert to its normal display.

3. Ensure the SPORT mode indicator is turned on.

SPORT MODE INDICATOR (ALL MODELS EXCEPT RXT-X)

NOTE: The SPORT mode indicator will come on and stay on as long as sport mode is active.

RXT-X/RXT-X aS

There is no SPORT mode indicator in the multifunction display, but only a SPORT MODE indicator light in the tachometer.

Deactivating Sport Mode

To quickly deactivate sport mode while riding at speed, carry out the following:

⚠ WARNING

When deactivating sport mode, be sure to maintain situational awareness of other watercrafts, obstacles, or persons in the water.

1. Depress and hold the SPORT button for at least 3 seconds.

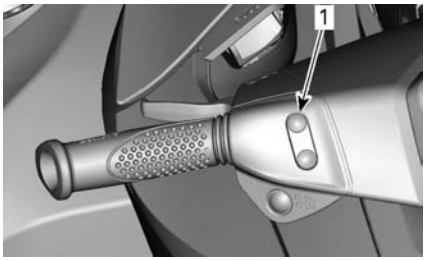

smo2012-002-009_a

TYPICAL
1. Sport button

NOTE: The following message will scroll in the multifunction display: SPORT MODE DEACTIVATED.

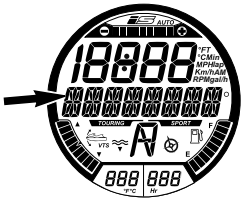

MESSAGE DISPLAYED
SPORT MODE DEACTIVATED

NOTE: After a few seconds, the gauge will revert to its normal display.

All Models Except RXT-X/RXT-X aS

2. Ensure the TOURING mode indicator is on.

TOURING MODE INDICATOR (ALL MODELS EXCEPT RXT-X/RXT-X aS)

ECO Mode (Fuel Economy Mode)

How to Activate ECO Mode

1. Depress the ECO button for at least 1 second.

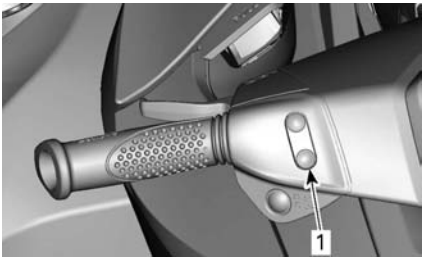

smo2012-002-009_b

TYPICAL
1. ECO button

The following message will be displayed on the multifunction display:

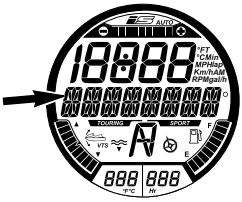

MESSAGE DISPLAYED
ECO MODE

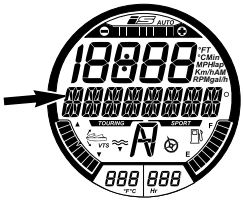

MESSAGE DISPLAYED
FUEL ECONOMY MODE - HOLD SET TO ACTIVATE OR MODE TO EXIT

The ECO mode indicator will also be activated.

How to Deactivate ECO Mode

1. Depress the ECO button for at least 1 second.

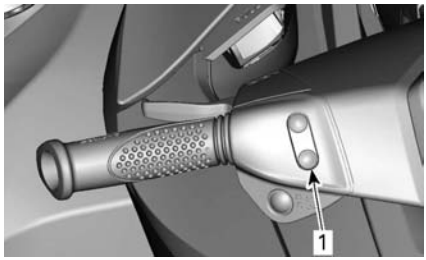

smo2012-002-009_b

TYPICAL
1. ECO button

The ECO mode indicator will be deactivated.

Cruise Mode

Cruise mode is a function of iTC (intelligent Throttle Control) system that allows the operator to set the desired maximum watercraft speed.

This is useful when cruising for long distances, operating in limited speed zones, or towing a tuber, skier or wake boarder.

The operator must keep the throttle depressed to maintain forward speed.

Once the maximum cruise speed is set, the operator can vary the watercraft speed from idle speed up to the set cruise speed using the throttle lever. The set cruise speed will not be exceeded even if the throttle lever is fully depressed.

As you proceed under a constant cruising speed setting, keep your attention level up to maintain good situational awareness.

Slowing down is a matter of releasing the throttle lever further than the set point, or by pulling the iBR lever in.

If the iBR lever is pulled in for braking, CRUISE mode is overridden but **not deactivated**.

Once the iBR lever is released and the throttle is pulled in to engage forward thrust, the cruise function will reengage to limit the watercraft speed as it was set before.

Prerequisite for Cruise Mode Activation

NOTE: Cruise mode is not available if slow speed mode or ski mode is engaged.

CRUISE MODE can be activated:

– At idle in forward thrust
– Whenever at constant speed.

Activating Cruise Mode

1. Maintain a constant speed.
2. Press and hold the cruise button for approximately 1 second.

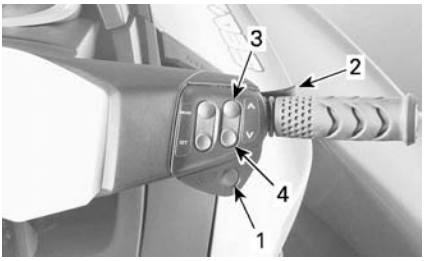

sdd2009-001-024_c

TYPICAL
1. *CRUISE button*
2. *Throttle lever*
3. *UP button*
4. *DOWN button*

You will hear a beep indicating that you are now in cruise mode, and a green CRUISE indicator light will be lit.

sdd2009-001-034_a

TYPICAL - CRUISE MODE INDICATOR LIGHT

NOTE: Activating cruise mode of operation only limits the maximum speed available when depressing the throttle lever. The throttle lever must be held in to maintain forward speed. Watercraft speed can be varied from idle up to the set cruise speed using the throttle lever once the cruise function is activated. Watercraft speed may vary depending on water conditions during use.

Cruise Mode Activation at Idle Speed

NOTE: This function is available up to approximately 10 km/h (6 MPH).

To activate and preset CRUISE MODE at idle speed in forward thrust:

1. Press and hold the cruise button until the following message appears in the multifunction display.

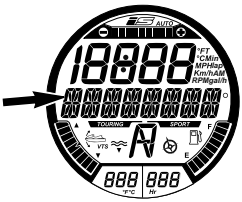

MESSAGE DISPLAYED
CRUISE MODE _ SELECT SPEED _ PRESS SET TO ACCEPT OR MODE TO EXIT

2. Press the UP button until the desired cruise speed is indicated in the numerical display. The following message will scroll in the multifunction display.

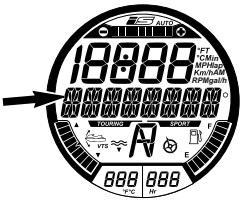

MESSAGE DISPLAYED
CRUISE MODE _ SPEED ADJUSTING

3. Press the SET button to save the cruise speed selected and engage cruise speed function. The following message will scroll in the multifunction display.

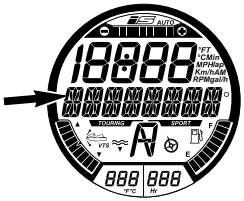

MESSAGE DISPLAYED
CRUISE MODE ACTIVE

Changing Set Cruise Speed

To **increase** or **decrease** the set cruise speed:

1. Keep throttle lever fully depressed.
2. Press the UP/DOWN button.

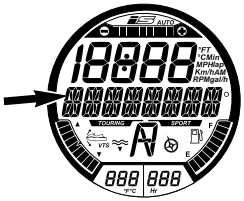

MESSAGE DISPLAYED
CRUISE MODE _ SPEED ADJUSTING

3. Press the UP/DOWN button to adjust speed accordingly.

Deactivating Cruise Mode

To deactivate cruise mode:

1. Release the throttle lever.
2. Press the cruise button.

Deactivation of cruise mode is indicated by:

– The CRUISE indicator light in the speedometer display will go off.
– A BEEP will be heard.

NOTE: If the throttle lever is not fully released when the cruise button is pressed to deactivate cruise mode, the BEEP will not be heard and the cruise light will remain on. The speed limiting function of cruise mode will stay active until the throttle is fully released, then the BEEP will be heard and the cruise light will go out.

Slow Speed Mode (all Models Except RXT-X and RXT-X aS)

The Intelligent Throttle Control also allows for a Slow Speed Mode where the driver can adjust and set idle speed. This is usefull when operating in slow speed zones where the driver must be especially attentive to possible obstacle avoidance.

The operator can set idle speed between 1.6 km/h to 11 km/h (1 MPH to 7 MPH).

If you accelerate above approximately 14 km/h (9 MPH) , Slow Speed Mode will be deactivated and the engine will return to idle RPM when the throttle is released.

Should a situation arise where the operator must stop or accelerate quickly away from a hazardous situation, pulling in the iBR lever, or pulling in on the throttle lever will deactivate slow speed mode and normal control of the watercraft will be returned to the operator.

Activating Slow Speed Mode

To activate slow speed mode of operation:

1. Release the throttle lever to idle RPM.
2. Pull in and release the iBR lever to engage neutral.
3. Press and hold the cruise button for approximately 1 second.

sdd2009-001-024_g

TYPICAL
1. CRUISE button

The CRUISE indicator will come on in the speedometer or multifunction display to indicate cruise activation.

sdd2009-001-034_a

TYPICAL - CRUISE MODE INDICATOR LIGHTIN SPEEDOMETER

A message will scroll in the multifunction display to specify that you are now in slow speed mode.

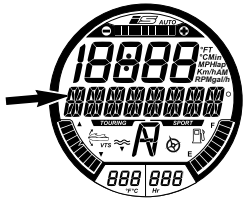

MESSAGE DISPLAYED
SLOW SPEED MODE _ SPEED ADJUSTING

The default slow speed setting of 1 will also come on for a few seconds in the numerical display.

SLOW SPEED MODE INDICATION
1. SLOW SPEED MODE ACTIVATED message 2. Slow speed setting is displayed here for a few seconds

NOTE: The scrolling SLOW SPEED MODE message repeats itself as long as slow speed mode is activated. The numerical display reverts back to the previous indication after a few seconds.

SLOW SPEED MODE INDICATION
1. SLOW SPEED MODE message 2. Numerical display reverts to previous indication

Changing Set Slow Speed

To **increase** or **decrease** the set slow speed, press the UP/DOWN button on the RH handlebar once, or repeatedly.

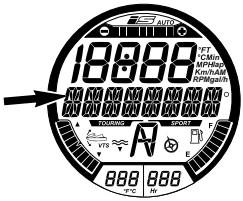

MESSAGE DISPLAYED
SLOW SPEED MODE _ SPEED ADJUSTING

The setting point indication in the digital screen will come back on to indicate the slow speed setting change.

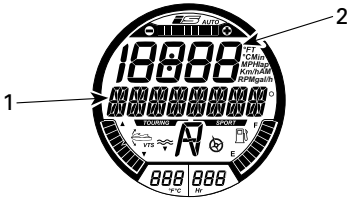

SLOW SPEED MODE INDICATION
1. SLOW SPEED MODE message 2. Numerical display reverts to previous indication

The displays will revert back to their previous indication a few seconds after the last activation of the UP or DOWN button.

NOTE: There are 5 slow speed settings available (1 through 5). Adjust slow speed mode to desired speed.

The following message will scroll across the multifunction display periodically as a reminder.

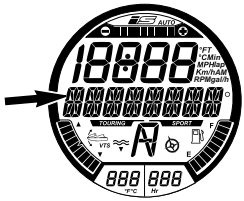

MESSAGE DISPLAYED
SLOW SPEED MODE ACTIVE

The displays will revert back to their previous indication a few seconds after the last activation of the UP or DOWN button.

Deactivating Slow Speed Mode

The slow speed mode can be deactivated using any of the following methods:

– Pressing the cruise button.
– Depressing the iBR lever.
– Accelerating past the set slow speed.

When deactivating SLOW SPEED MODE by pressing the cruise button, or accelerating using the throttle lever, the iBR gate stays in the forward position.

When using the iBR lever, the iBR gate will move towards the reverse position, then neutral when the lever is released.

SLOW SPEED MODE deactivation will be indicated in the following manner:

– The CRUISE indicator will go out
– The scrolling SLOW SPEED MODE ACTIVE message will cease.

Ski Mode

Ski mode allows for repeated and precisely controlled launches, and a set towing speed, specifically for towing a skier or wake boarder.

Ski mode is not available if using a LEARNING key.

RAMP Function

The RAMP function offers a pre-programmed setting for launching and accelerating the PWCr.

RAMP 1 provides:
- Slowest launch (smoothest)
- Slowest acceleration rate
- Slowest TARGET SPEED range.

RAMP 5 provides:
- Quickest launch
- Quickest acceleration rate
- Highest TARGET SPEED range.

TARGET SPEED Function

The TARGET SPEED function limits the maximum towing speed.

Once the RAMP has been selected, an average PWC target speed for that RAMP will be visible in the numerical display.

The average speed displayed and the speed range available is dependent on the RAMP selected. The higher the RAMP number, the higher the speed range.

The operator may increase or decrease the target speed to any value within the selected RAMP speed range.

NOTE: If the desired target speed cannot be set in the selected RAMP, you must exit then reengage SKI MODE, and select a different RAMP.

Engaging and Using Ski Mode

To engage ski mode, carry out the following steps:

1. Release throttle lever.

NOTE: Ski mode cannot be engaged if the throttle lever is not fully released, and if CRUISE or SLOW SPEED mode is engaged. A message will appear in the multifunction display advising you of the situation. Follow the instructions in the display.

2. Press the MODE button repeatedly until SKI MODE is visible in the multifunction display.

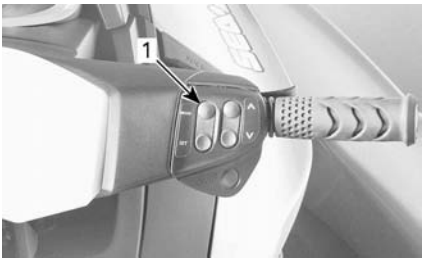

sdd2009-001-024_e

TYPICAL
1. MODE button

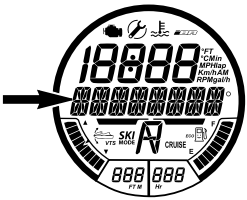

MESSAGE DISPLAYED
SKI MODE

3. Press SET to enter the function. The multifunction gauge message will change to RAMP. The RAMP setting number will be visible in the numerical display.

sdd2009-001-024_f

TYPICAL
1. SET button

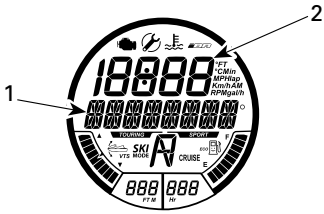

FIRST SETTING AVAILABLE - RAMP

1. RAMP message
2. Ramp setting

4. To change the RAMP setting, press the UP/DOWN button until the desired ramp number is visible in the numerical display.
5. Press SET to lock in the ramp setting; the multifunction display will change to the TARGET SPEED setting function.

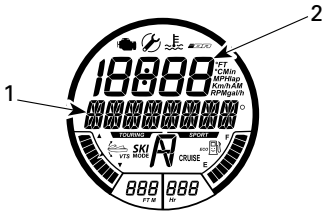

SECOND SETTING AVAILABLE - TARGET SPEED

1. TARGET SPEED message
2. Target speed setting

6. Press the UP/DOWN button to increase or decrease the target speed.
7. Press SET to lock in the target speed; the display will switch to the following scrolling message.

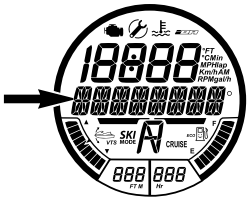

MESSAGE DISPLAYED

SKI MODE_PRESS_SET_TO START OR MODE TO EXIT

NOTE: A BEEP will be heard every 5 seconds as a SKI MODE engaged reminder.

8. Press SET again; the following confirmation message will appear.

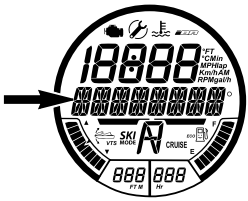

MESSAGE DISPLAYED

SKI MODE ACTIVE_PRESS_MODE_AND RETURN TO IDLE TO CANCEL

NOTE: The SKI MODE indicator will also come ON and blink when ski mode becomes active. It will be ON steady when the operator pulls and holds the throttle lever all the way in to the handlebar.

SKI MODE INDICATOR

9. To launch the PWC in ski mode, pull in and hold the throttle lever all the way to the handlebar grip. The PWC will accelerate to the set TARGET SPEED and the SKI MODE indicator will be on steady.
10. To increase or decrease the TARGET SPEED during a ski run, press the UP/DOWN button, **do not** release the throttle lever.

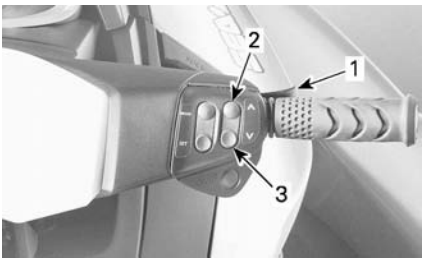

sdd2009-001-024_h

TYPICAL
1. *Hold throttle lever in*
2. *Press UP button to increase speed*
3. *Press DOWN button to decrease speed*

NOTE: If the throttle is partly released during a ski run, the SKI MODE indicator light will start to blink and the speed adjust function using the UP/DOWN arrow button will be deactivated.

11. To end a ski run or to pick up a fallen skier or wakeboarder, fully release the throttle to regain normal throttle control.

NOTE: When the throttle is fully released during ski mode operation, the system returns to ski mode engaged status. The SKI MODE indicator light will go out but, ski mode will remain engaged and a message to that effect will reappear in the multifunction display.

12. Press SET to reactivate ski mode and fully pull in the throttle lever to start another ski run.

Deactivating Ski Mode

To exit ski mode at any given point during the ski mode setting process, press the MODE button.

To end a ski run and completely deactivate ski mode, release the throttle to idle, then press the MODE button.

Learning Key Mode

There are 5 speed settings available.

By default, the speed setting is no 3.

Changing Learning Key Speed Settings

NOTE: Changing key settings is only available when the engine is not running.

To change learning key settings, carry out the following:

1. Press the START/STOP button to wake up the electrical system and install the NORMAL key on the engine cut-off switch.
2. Wait for the information center to complete its self-test and display the key recognition message.
3. Press the MODE button repeatedly until KEY MODE is visible in the digital screen of the information center.

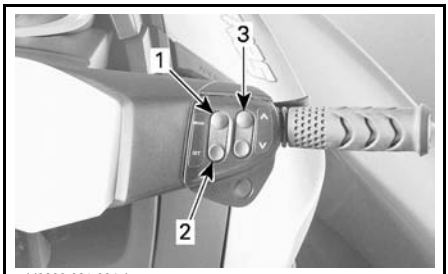

sdd2009-001-024_b

TYPICAL - GAUGE CONTROL BUTTONS
1. *MODE button*
2. *SET button*
3. *UP/DOWN button*

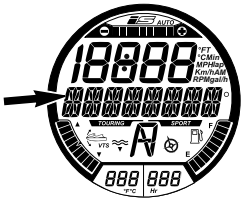

MESSAGE DISPLAYED

KEY MODE

4. Press the SET button once to enable learning key mode setting function. The display will change to L-Key.

FUNCTION SELECTED - LEARNING KEY

1. L-KEY message
2. Learning key setting

5. Press the UP or DOWN button to toggle the key setting between 1 and 5. See table for speed limitations according to setting.
6. Press the SET button once to save the setting, twice to exit the function, or simply wait for the function to time-out. The change in key setting will automatically be saved.

NOTE: The key speed setting is applicable to any key of the same type used on a specific watercraft. The same key type used on a different watercraft may therefore have a different key speed setting.

D.E.S.S. KEY TYPE	KEY SPEED SETTING	APPROX. MAX. SPEED
LEARNING KEY	5	80 km/h (50 MPH)
	4	74 km/h (46 MPH)
	3	68 km/h (42 MPH)
	2	60 km/h (37 MPH)
	1	51 km/h (32 MPH)

Jet Pump Water Intake and Impeller Cleaning

⚠ WARNING

Keep away from intake grate while engine is running. Items such as long hair, loose clothing or personal flotation device straps can become entangled in moving parts.

Weeds, shells or debris can get caught on the intake grate, drive shaft and/or impeller. A clogged water intake may cause troubles such as:

- **Cavitation:** Engine speed is high but watercraft moves slowly due to reduced jet thrust, jet pump components may be damaged.
- **Overheating:** Since the jet pump operation controls the flow of water to cool the exhaust system, a clogged intake will cause the engine to overheat and damage engine internal components.

A weed clogged area can be cleaned as follows:

⚠ WARNING

If it is necessary to reach in to remove any foreign object caught in the propulsion system, the tether cord MUST BE REMOVED from the engine cut-off switch.

In-Water Cleaning

Rock the watercraft several times while repeatedly pressing engine START/STOP button for short period without starting engine. Most of the time, this will remove the blockage. Start engine and make sure watercraft operates properly.

If the aforementioned method does not work, the following can be performed:

- With engine running and before applying throttle, pull the iBR lever in to select reverse operation and vary throttle quickly several times.
- Repeat procedure if necessary.

If system is still blocked, move the watercraft out of the water for cleaning. Refer to *ON-BEACH WATER CLEANING*.

On-Beach Water Cleaning

⚠ WARNING

The tether cord MUST BE REMOVED from the engine cut-off switch to prevent accidental engine starting before cleaning the jet pump area.

Place a cardboard or a carpet beside the watercraft to prevent scratching when turning the watercraft for cleaning.

Rotate the watercraft to any side for cleaning.

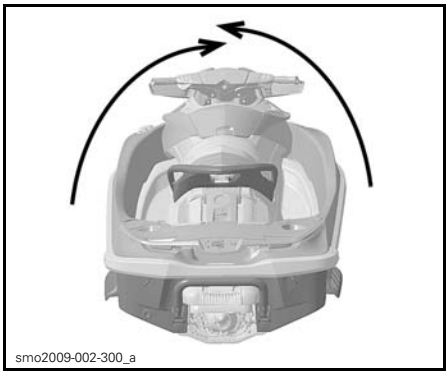

TYPICAL

Clean the water intake area. If the system is still clogged, refer to an authorized Sea-Doo dealer for servicing.

NOTICE Inspect water intake grate for damage. Refer to an authorized Sea-Doo dealer for repair as necessary.

For ease of access to the jet pump area, move the iBR to the forward position, refer to *iBR OVERRIDE FUNCTION* for detailed instructions.

iBR Override Function

When the iBR override function is activated, it allows the user to electrically move the iBR gate and nozzle through its full range of motion using the VTS control button.

NOTE: The iBR override function is only available when the engine is not running.

⚠ WARNING

When moving the iBR gate using the iBR override function, ensure noone is near the rear of the watercraft. Movement of the gate may squeeze fingers.

NOTICE An object or tool caught in the iBR system when using the iBR override function may cause damage to the iBR components. Remove all rigid foreign objects that may obstruct the iBR gate travel before moving it.

⚠ WARNING

If it is necessary to reach in to remove any foreign object caught in the propulsion system, strictly observe the following before proceeding:

- Remove tether cord from the engine cut-off switch.
- Wait at least 5 minutes.
- Do not press on START/STOP button. Should the START/STOP button is pressed, wait another 5 minutes.

Activating iBR Override Function

To activate the iBR override function, carry out the following step.

1. Power up the electrical system by pressing the START/STOP button.
2. Install the tether cord on the engine cut-off switch.

NOTE: The tether cord must be installed to ensure the information center will not shut off all indications after its self test function. Electrical power will stay on for approximately 3 minutes.

3. Pull in and hold the iBR lever for the entire procedure.

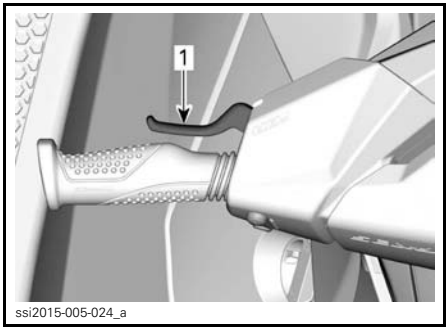

1. iBR lever pulled and held

4. When the following message appears in the multifunction gauge, press the SET button.

MULTIFUNCTION GAUGE MESSAGE
"ENTERING IBR OVERRIDE - PRESS SET BUTTON"

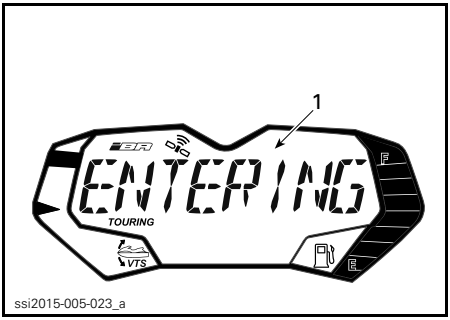

TYPICAL
1. Multifunction gauge message

After a few seconds, the following message will repeatedly scroll across the multifunction gauge.

MULTIFUNCTION GAUGE MESSAGE
"IBR OVERRIDE ON- RELEASE LEVER TO EXIT"

5. While still holding the iBR lever in, press the VTS UP/DOWN button or the UP/DOWN button (if vehicle is not equipped with VTS switch) to move the iBR gate to the desired position. Ensure the VTS indication in the multifunction gauge changes with the iBR gate movement. If the iBR gate moves upwards, the indication moves upwards.
6. Release the iBR lever.
7. Remove the tether cord from the engine cut-off switch.

⚠ WARNING

If it is necessary to reach in to remove any foreign object caught in the propulsion system, strictly observe the following before proceeding:
- **Remove tether cord from the engine cut-off switch.**
- **Wait at least 5 minutes.**
- **Do not press on START/STOP button. Should the START/STOP button be pressed, wait another 5 minutes.**

Deactivating iBR Override Function

To deactivate the iBR override function, release the iBR lever. The IBR OVERRIDE ON- RELEASE LEVER TO EXIT message will cease to scroll in the multifunction gauge.

NOTE: When the engine is started, the iBR gate will move to the neutral position.

⚠ WARNING

When moving the iBR gate using the iBR override function, ensure no-one stands near the rear of the watercraft. Movement of the gate may squeeze fingers.

Capsized Watercraft

NOTE: Some vehicle safety labels are not shown on illustrations. For information on vehicle safety labels, refer to *WATERCRAFT SAFETY LABELS* subsection.

The watercraft is designed so that it should not turn over easily. Two sponsons mounted on the side of the hull assist watercraft stability. If it turns over, it will remain capsized.

⚠ WARNING

When watercraft is capsized, do not attempt to restart the engine. Operator and passengers should always wear approved personal flotation devices.

To turn the watercraft upright, ensure the engine is off and the D.E.S.S. key is NOT on its post, then grab the inlet grate, step on a side bumper rail and use your weight to rotate the watercraft towards you.

NOTE: A label on the stern near the flushing connector provides instructions on how to turn the watercraft right side up. The label is upside down so that it can be read when the watercraft is overturned.

smo2009-002-153_a

TYPICAL

The 4-TEC™ engine features a tip-over protection system (T.O.P.S.™). When the watercraft tips over, the engine is automatically stopped.

When the watercraft is returned to its normal operating position, the engine can be started normally.

NOTICE **If the watercraft has been capsized for more than 5 minutes, do not attempt to crank the engine to avoid water ingestion that would damage the engine. See an authorized Sea-Doo dealer as soon as possible.**

NOTICE **If the engine does not crank, do not attempt to start it anymore. Otherwise, the engine could be damaged. See an authorized Sea-Doo dealer as soon as possible.**

As soon as possible, check for presence of water in the bilge. Drain as necessary when back to the shore.

Submerged Watercraft

To limit damages to the engine, perform the following procedure as soon as possible.

Drain bilge.

If it was submerged in salt water, spray bilge and all components with fresh water using a garden hose to stop the salt corroding effect.

NOTICE **Never try to crank or start the engine. Water trapped in intake manifold would flow towards the engine and possibly cause severe engine damage.**

Bring the watercraft to an authorized Sea-Doo dealer as soon as possible to have it serviced.

NOTICE **The longer the delay before you have the engine serviced, the greater the damage to the engine will be.**

Water-Flooded Engine

NOTICE **Never try to crank or start the engine. Water trapped in intake manifold would flow towards the engine and possibly cause severe engine damage.**

Bring the watercraft to an authorized Sea-Doo dealer as soon as possible to have it serviced.

NOTICE **The longer the delay before you have the engine serviced, the greater the damage to the engine will be. Failure to have the engine properly serviced may cause severe engine damage.**

Towing the Watercraft in Water

Special precautions should be taken when towing a Sea-Doo watercraft in water.

The maximum recommended towing speed is 24 km/h (15 MPH).

This will prevent the exhaust system from filling with water, which may lead to water being injected into and filling the engine. Without the engine running, there isn't any exhaust pressure to push the water out the exhaust outlet.

NOTICE Failure to follow these instructions may result in damage to the engine. If you must tow a stranded watercraft in water, be sure not to exceed the maximum towing speed of 24 km/h (15 MPH).

If you have to tow the watercraft faster than the maximum recommended speed, clamp the cross over hose.

smo2013-001-001_a

1. Cross over hose

MAINTENANCE

MAINTENANCE SCHEDULE

Maintenance is very important for keeping the watercraft in a safe operating condition. The watercraft should be serviced as per the maintenance schedule.

A repair shop or person of the owner's choosing may maintain, replace, or repair emission control devices and systems. These instructions do not require components or service by BRP or authorized Sea-Doo dealers. Although an authorized Sea-Doo dealer has an in-depth technical knowledge and tools to service the Sea-Doo personal watercraft, the emission-related warranty is not conditioned on the use of an authorized Sea-Doo dealer or any other establishment with which BRP has a commercial relationship. For emission-related warranty claims, BRP is limiting the diagnosis and repair of emission-related parts to the authorized Sea-Doo dealers. For more information, please refer to the *US EPA EMISSION-RELATED WARRANTY* contained herein. Proper maintenance is the owner's responsibility. A warranty claim may be denied if, among other things, the owner or operator caused the problem through improper maintenance or use.

You must follow the instructions for fuel requirements in the fueling section of this manual. Even if gasoline containing greater than ten volume percent ethanol is readily available, the US EPA issued a prohibition against the use of gasoline containing greater than 10 vol% ethanol that applies to this vehicle. The use of gasoline containing greater than 10 vol% ethanol with this engine may harm the emission control system.

Disregard the information pertaining to the following systems if the watercraft is not equipped with these features:

- iBR (intelligent Brake and Reverse)
- iS (intelligent Suspension) (GTX LTD iS only)
- aS (adjustable Suspension) (RXT-X aS only)

Carry out all maintenance as listed in the schedule whenever the hours or time is reached.

NOTE: As an example, at 200 hours or 2 years, complete all items in this table and ALSO all items in the EVERY 100 hours or 1 year table.

⚠ WARNING

Failure to properly maintain the watercraft according to the maintenance schedule and procedures can make it unsafe to operate.

The maintenance schedule does not exempt the pre-ride inspection.

FIRST 50 HOURS OR 1 YEAR
Replace engine oil and filter
Inspect the exhaust system (daily flushing in salt water or dirty water use)
Inspect fuel cap, filler neck, fuel tank, fuel tank straps, fuel lines and connections
Test the fuel system for leaks
Inspect the throttle body
Check for fault codes
Inspect spark plugs
Inspect electrical connections and fastening (ignition system, starting system, fuel injectors, fuse boxes etc.)
Test the engine cut-off switch and the monitoring beeper
Verify the steering cable and connections
Verify steering nozzle bushings
Verify O.T.A.S. operation
Inspect carbon ring and drive shaft rubber boot (more frequently when using PWC in foul or dirt water)
Inspect impeller, impeller boot and wear ring condition
Verify iBR gate backlash
Inspect iBR protective guard
The following must be performed each month:
Inspect battery condition
Verify battery connections
Inspect sacrificial anode (more often in salt water use) and change when necessary

EVERY 100 HOURS OR 1 YEAR
Replace engine oil and filter
Inspect engine rubber mounts
Spray an anticorrosion lubricant to metallic components in engine compartment (every 10 hours in salt water use)
Inspect and flush the exhaust system
Inspect the cooling system (coolant level, hoses and fasteners for leaks)

EVERY 100 HOURS OR 1 YEAR
Lubricate and verify the iTC lever for proper operation (Depress and release the lever to check for freedom of movement. If any friction is felt, the lever must be taken apart, cleaned, inspected for wear and lubricated)
Inspect fuel cap, filler neck, fuel tank, fuel tank straps, fuel lines and connections (At storage period or after 100 hours of use whichever comes first)
Test the fuel system for leaks
Inspect the throttle body
Inspect the air intake silencer
Check for fault codes
Inspect and lubricate ignition coils (1503 4-TEC engines)
Inspect ignition coils (1630 ACE HO engines)
Inspect electrical connections and fastening (ignition system, starting system, fuel injectors, fuse boxes etc.)
Test the engine cut-off switch and the monitoring beeper
Verify the steering cable and connections
Verify steering nozzle bushings
Verify O.T.A.S. operation
Inspect carbon ring and drive shaft rubber boot (more frequently when using PWC in foul or dirt water)
Inspect impeller, impeller boot and wear ring condition
Verify the impeller shaft radial play
Inspect the jet pump housing
Verify and lubricate splines of the drive shaft and impeller
Measure impeller and impeller wear ring clearance
Lubricate and verify the iBR lever for proper operation (Depress and release the lever to check for freedom of movement. If any friction is felt, the lever must be taken apart, cleaned, inspected for wear and lubricated)
Verify iBR gate backlash
Verify iVTS trim ring, reverse support and iBR gate
Inspect iBR protective guard
Inspect iS system (leaks, pump reservoir oil level and position sensor operation)
Inspect aS system (leaks, remote reservoir (mounts, adjustment knob tightening)
Inspect hull, ride plate and water inlet grate for damages

EVERY 100 HOURS OR 1 YEAR
The following must be performed every 100 hours (irrespective of the number of years):
Replace spark plugs (1630 ACE HO engines)
The following must be performed every 100 hours or at storage period (whichever comes first):
Impeller shaft seal, sleeve, O-ring and impeller cover

EVERY 200 HOURS OR 2 YEARS
1503 4-TEC engines: Replace spark plugs
The following must be performed every 200 hours (irrespective of the number of years):
1503 4-TEC engines: Replace the supercharger clutch

MAINTENANCE FREE (1630 ACE HO engines)
1630 ACE HO engines: The supercharger is **maintenance free***. *Inspect supercharger **every 200 hours** (irrespective of the number of years) when vehicle is used in intense conditions such as off-shore riding, continuous operation at wide open throttle, etc.

NOTICE Do not attempt to replace components of the supercharger assembly as the unit is factory- balanced to precise specifications. Failure to follow this recommendation may lead to supercharger and / or engine damage.

EVERY 300 HOURS OR 5 YEARS
Replace the coolant

This section includes instructions for basic maintenance procedures.

⚠ WARNING

Turn off the engine and follow these maintenance procedures when performing maintenance. If you do not follow proper maintenance procedures you can be injured by hot parts, moving parts, electricity, chemicals or other hazards.

⚠ WARNING

Should removal of a locking device (e.g. lock tabs, self-locking fasteners, etc.) be required, always replace with a new one.

NOTICE Never leave any object, rag, tool, etc., in the engine compartment or in the bilge.

Engine Oil

Recommended Engine Oil

Models with 155 Engine

Use XPS 4-STROKE SYNTH. BLEND OIL (P/N 293 600 121). (If the recommended XPS TM engine oil is not available, use 5W40 or 10W40 API SERVICE SJ, SL, SM or SN oil).

Always check the API service label certification on the oil container, it must contain at least one of the above standards.

Models with 215, 260 and 300 Engines

Use XPS 4-STROKE SYNTH. BLEND OIL (P/N 293 600 121).

NOTICE These engines have been developed and validated using the BRP XPS 4-Stroke Synthetic Blend Oil. BRP recommends the use of its XPS 4-Stroke Synthetic Blend Oil at all times. If the recommended XPS engine oil is not available, use a 10W40 mineral engine oil compatible with wet clutches such as JASO MA certified oils. Damages caused by oil which is not suitable for the engine may not be covered by the BRP limited warranty.

NOTICE NEVER use fully synthetic oil. This would impair the proper operation of the supercharger clutch. Do not add any additives to the recommended oil. Oils for API service classification SM or SN contain additives (friction modifiers) that may cause inappropriate slippage of the supercharger and eventually lead to premature wear.

Engine Oil Level

NOTICE Check level frequently and refill if necessary. Do not overfill. Operating the engine with an improper level may severely damage engine.

⚠ CAUTION Certain components in the engine compartment may be very hot. Direct contact may result in skin burn.

Oil level can be checked with watercraft either in or out of water.

If Watercraft is Out of the Water

NOTICE Watercraft must be level.

⚠ CAUTION When operating the engine while the watercraft is out of water, the heat exchanger in the ride plate may become very hot. Avoid any contact with the ride plate as burns may occur.

1. Raise trailer tow pole, then block in position when bumper rail is level.
2. Open the seat.

Models Equipped with a Suspension

3. Remove the ventilation box from the deck extension to gain partial access to engine compartment.

NOTE: To remove the ventilation box, simply release the 3 clips retaining it and lift it off the deck extension.

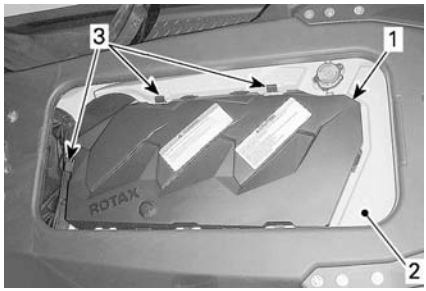

smo2009-002-002_a

1. *Ventilation box*
2. *Deck extension*
3. *Retaining clips*

All Models

4. Install a garden hose on the exhaust system flushing connector. Refer to *EXHAUST SYSTEM* in this section and follow the procedure.

NOTICE

– Never run engine without supplying water to the exhaust system. Failure to cool exhaust system may severely damage it.
– Never run engine longer than 2 minutes. Drive line seal has no cooling when watercraft is out of water.

5. With the engine already at normal operating condition, let engine **idle for 30 seconds** then stop engine.
6. Wait at least 30 seconds for the oil to settle in the engine, then pull dipstick out and wipe clean.

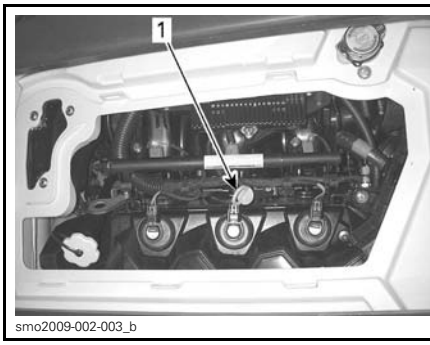

smo2009-002-003_b

TYPICAL- ALL MODELS EXCEPT MODELS WITH 300 ENGINES
1. *Oil dipstick location*

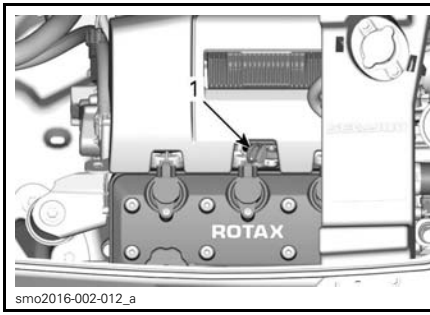

smo2016-002-012_a

TYPICAL - MODELS WITH 300 ENGINES
1. *Oil dipstick location*

7. Reinstall dipstick, push in completely.
8. Remove dipstick again and read oil level. It should be between the FULL and ADD marks.

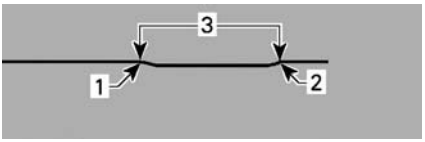

lmr2007-053-100_a

TYPICAL
1. *Full*
2. *Add*
3. *Operating range*

NOTE: On 1630 ACE HO engines, there is a 1 L (1.06 qt (U.S. liq.)) between Min and Max reading.

9. Add oil to ensure the level is between marks as required.

To add oil:
- Unscrew oil cap.
- Place a funnel in the oil filler neck opening.
- Add the recommended oil to the proper level.

NOTE: Do not overfill.

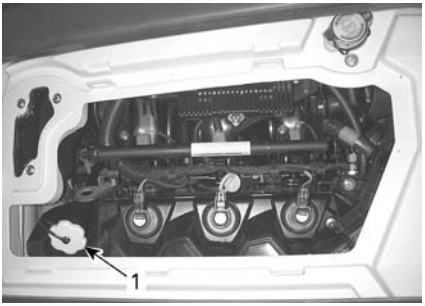

smo2009-002-003_c

TYPICAL - ALL MODELS EXCEPT MODELS WITH 300 ENGINES
1. *Oil filler cap location*

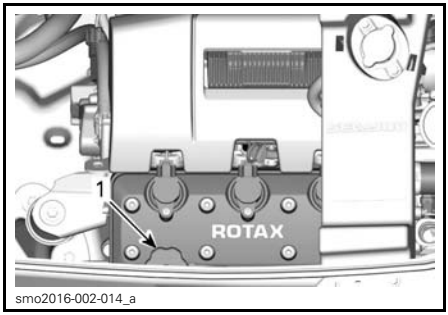

smo2016-002-014_a

TYPICAL - MODELS WITH 300 ENGINES
1. *Oil filler cap location*

NOTE: Every time oil is added in the engine, the complete procedure explained in this section must be carried out again. Otherwise, you will obtain a false oil level reading.

10. Properly reinstall oil cap and dipstick.

NOTICE **Ensure that oil filler cap is properly closed. Otherwise big quantities of oil can spill out the oil filler cap.**

Engine Oil Change and Oil Filter Replacement

The oil change and filter replacement may be performed by an authorized Sea-Doo dealer, repair shop, or person of your own choosing.

Engine Coolant

Recommended Engine Coolant

Always use LONG LIFE ANTIFREEZE (P/N 219 702 685) or equivalent. If the recommended coolant is not available, use a low silicate, extended life ethylene-glycol premixed coolant (50%-50%) specifically formulated for internal combustion aluminum engines.

To prevent antifreeze deterioration, always use the same brand and grade. Never mix different brands or grades unless cooling system is completely flushed and refilled.

Engine Coolant Level

⚠ WARNING

Check coolant level with engine cold. Never add coolant in cooling system when engine is hot.

⚠ CAUTION Certain components in the engine compartment may be very hot. Direct contact may result in skin burn.

Open seat.

Remove ventilation box. Refer to ENGINE OIL LEVEL for the procedure.

Locate the expansion tank cap.

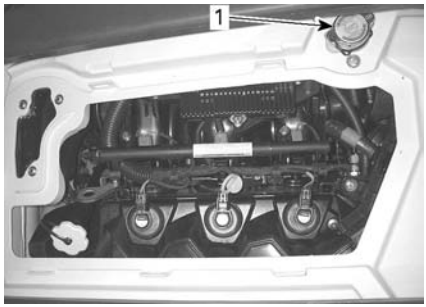

smo2009-002-003_d

TYPICAL - ALL MODELS EXCEPT MODELS WITH 300 ENGINE
1. Expansion tank cap

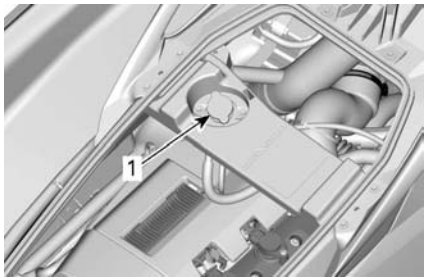

smo2016-002-011_a

TYPICAL - MODELS WITH 300 ENGINES
1. Expansion tank cap

With watercraft on a level surface, coolant level should be between MIN. and MAX. marks on coolant reservoir when engine is cold.

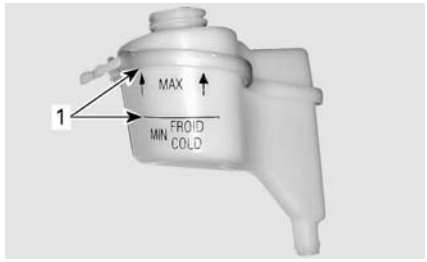

smo2009-002-137_a

TYPICAL - COOLANT EXPANSION TANK
1. Level between marks when engine is cold

NOTE: The watercraft is level when it is in water. When on a trailer, raise trailer tow pole and block in this position when bumper rail is level.

Add coolant, see *RECOMMENDED ENGINE COOLANT* for specification, to adjust coolant level between marks as required. Use a funnel to avoid spillage. Do not overfill.

Properly reinstall and tighten filler cap, then reinstall ventilation box and close seat.

NOTE: A cooling system that frequently requires coolant is an indication of leaks or engine problems. See an authorized Sea-Doo dealer.

Engine Coolant Replacement

Coolant replacement should be performed by an authorized Sea-Doo dealer.

Ignition Coils

Ignition Coil Access

Models Equipped with a Suspension

1. Open seat.
2. Remove rear ventilation box.

Models Without Suspension

1. Open seat.
2. Remove engine cover.

Ignition Coil Removal (1503 4-TEC Engine Only)

1. Disconnect ignition coil connector.

NOTICE **Do not remove the ignition coil before disconnecting the input connector or the wires may be damaged. Do not pry up ignition coil with a screwdriver to avoid damage.**

NOTE: Twist ignition coil in both directions as you pull it up to ease removal.

Remove ignition coil from spark plug.

Ignition Coil Removal (1630 ACE HO Engine Only)

1. Disconnect ignition coil connector.

NOTICE **Do not pry on ignition coil using any tool.**

2. Remove ignition coil retaining screw.
3. Remove ignition coil from spark plug by rotating coil side to side as you pull up.

Ignition Coil Lubrication (1503 4-TEC Engine Only)

1. Pull rubber seal down.

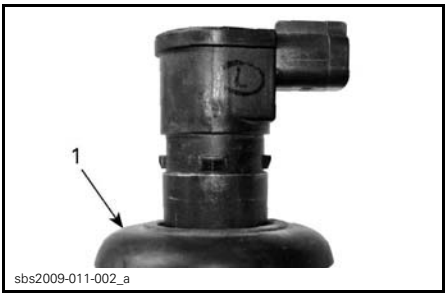

1. Rubber seal pulled down

2. Apply DOW CORNING 111 (P/N 413 707 000) or equivalent to rubber seal seat as shown.

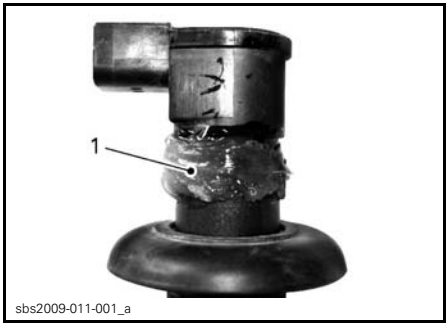

1. Apply product here

3. Pull rubber seal back on its seat making sure the tabs on the ignition coil and the slots in the seal properly match together.
4. Leave a ring of grease on top of the seal as shown to act as a water barrier. Wipe off the excess.

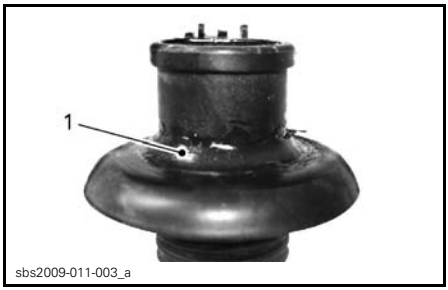

1. Correctly shaped excess of product

5. Apply DOW CORNING 111 (P/N 413 707 000) or equivalent on rubber seal contact area.

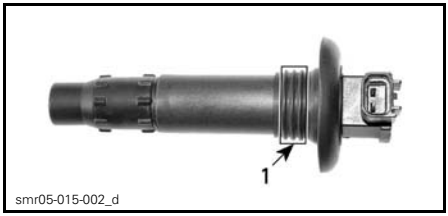

1. Apply product here

Ignition Coil Installation (1503 4-TEC Engine)

NOTE: Prior to inserting the ignition coil on its spark plug, apply sealant as described in *IGNITION COIL LUBRICATION*.

1. Install coil in cylinder head hole.
2. Push the ignition coil down to securely install it on the spark plug tip.
3. Ensure the seal seats properly with top surface of engine valve cover.

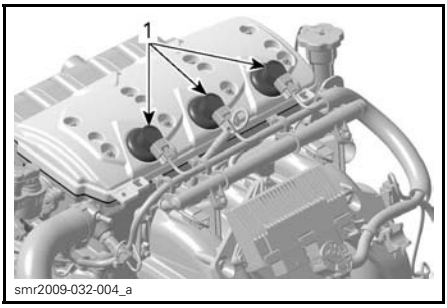

TYPICAL
1. Seal properly seated

Ignition Coil Installation (1630 ACE HO Engine)

1. Install ignition coil on spark plug.
2. Align the retaining screw hole of the ignition coil with the threaded hole on the valve cover.
3. Push the ignition coil all the way down until it rests on the valve cover.
4. Install and tighten retaining screw.

TIGHTENING TORQUE	
Ignition coil retaining screw	9 N•m ± 1 N•m (80 lbf•**in** ± 9 lbf•**in**)

5. Reconnect ignition coil connector.

Spark Plugs

Spark Plug Removal

1. Open seat.
2. Remove rear ventilation box (as applicable).
3. Disconnect the ignition coil input connector.
4. Remove ignition coil. Refer to *IGNITION COIL REMOVAL*.

⚠ WARNING

Never remove an ignition coil from a spark plug without disconnecting it from the wiring harness. Flammable vapors may be present in the bilge. Should the tether cord be installed on the engine cut-off switch, a spark could be generated at the coil spark plug end which could cause an explosion.

5. Using a spark plug socket, release the torque applied to the spark plug.

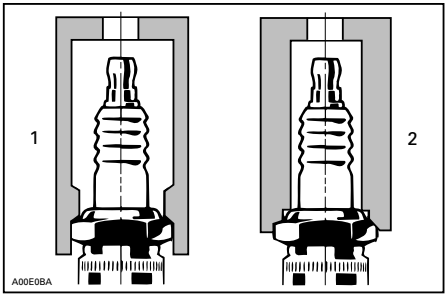

1. Approved socket
2. Improper socket

6. Clean the spark plug and cylinder head with pressurized air.
7. Unscrew spark plug then use the ignition coil to take spark plug out of spark plug hole.

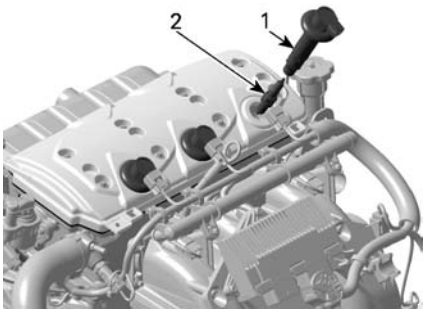

1. *Ignition coil*
2. *Spark plug*

Spark Plug Installation

Prior to installation, ensure the contact surfaces of the cylinder head and spark plug are free of grime.

1. Using a wire feeler gauge, set electrode gap as specified in the the *SPECIFICATIONS*.
2. Apply LOCTITE 767 (ANTISEIZE LUBRICANT) (P/N 293 800 070) over the spark plug threads to prevent possible seizure.
3. Hand screw spark plug into cylinder head. Then, tighten the spark plug clockwise to specification using an approved spark plug socket.
4. Install ignition coil. Refer to *IGNITION COIL INSTALLATION*.
5. Close seat.

Exhaust System

Exhaust System Flushing

Flushing the exhaust system and intercooler (supercharged models) with fresh water is essential to neutralize corroding effects of salt or other chemical products present in water. It will help to remove sand, salt, shells or other particles in water jackets and/or hoses.

All Models Except 260 and 300 Engine

Flushing the exhaust system with fresh water is essential to neutralize corroding effects of salt or other chemical products present in water. It will help to clean up sand, salt, shells or other particles in water jackets (exhaust system, intercooler (**supercharged engines**) and hoses).

Exhaust system flushing should be performed when the watercraft is not expected to be used further the same day or when the watercraft is stored for any extended time.

NOTICE **Failure to flush the system, when necessary, will severely damage exhaust system. Make sure engine operates during entire procedure.**

⚠ WARNING

Perform these operations in a well ventilated area. Certain components in the engine compartment may be very hot. Direct contact may result in skin burn. Do not touch any electrical part or jet pump area when engine is running.

⚠ WARNING

When operating the engine while the watercraft is out of the water, the heat exchanger in the ride plate may become very hot. Avoid any contact with ride plate as burns may occur.

Connect a garden hose to connector located at the rear of watercraft. Do not open water tap yet.

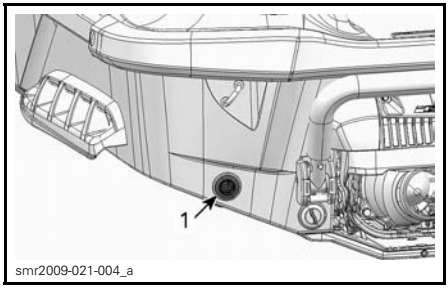

1. *Water inlet connector*

NOTE: The following tool is recommended when a quick connect adapter is used to ease garden hose installation.

RECOMMENDED TOOL	
FLUSHING CONNECTOR ADAPTER (P/N 295 500 473)	

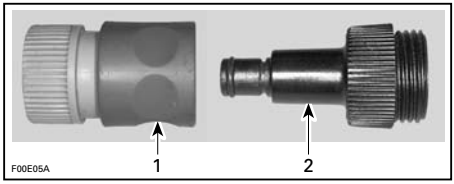

1. *Quick connect adapter*
2. *Flushing connector adapter*

To flush the exhaust system, start the engine then immediately open the water tap.

NOTICE **Always start the engine before opening the water tap. Open water tap immediately after engine is started to prevent overheating. Never run engine without supplying water to the exhaust system when watercraft is out of water.**

Run the engine about 20 seconds at a fast idle between 4000 - 5000 RPM.

NOTICE **Never run engine longer than 2 minutes. Drive line seal has no cooling when watercraft is out of water.**

Ensure water flows out of jet pump while flushing.

Close the water tap, then stop the engine.

NOTICE **Always close the water tap before stopping the engine.**

Disconnect the garden hose.

NOTICE **Remove flushing connector adapter after operation (if used).**

Models with 260 and 300 Engine

NOTICE **If watercraft is used in salt water, exhaust system must be flushed daily to avoid serious damage to mechanical components.**

Flushing should be performed when the watercraft is not expected to be used further the same day or when the watercraft is stored for any extended time.

⚠ WARNING

Perform this operation in a well ventilated area.

Proceed as follows:

Clean jet pump by spraying water in its inlet and outlet and then apply a coating of XPS Lube or equivalent.

⚠ CAUTION **When operating the engine while the watercraft is out of the water, the heat exchanger in the ride plate may become very hot. Avoid any contact with ride plate as burns may occur.**

Connect a garden hose to the connector located at the rear of watercraft (on the port side of the stern). Do not open water tap at this time.

NOTICE **Always run the engine before opening the water tap. If not, water will get inside the engine.**

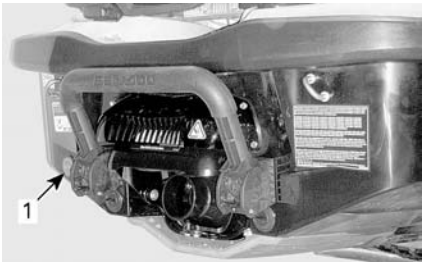

smo2009-002-132_c

TYPICAL
1. Flushing connector location

NOTE: An optional quick connect hose adapter and hose fitting can be used (P/N 295 500 473). No hose pincher is required to flush engine.

smo2009-002-138

QUICK CONNECT HOSE ADAPTER

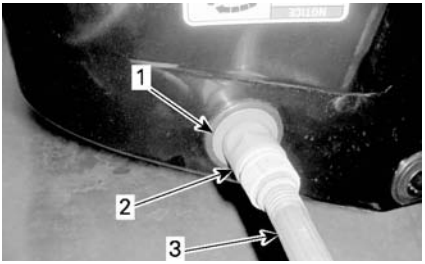

smo2009-002-139_a

TYPICAL
1. Hose adapter (optional, not mandatory)
2. Quick connect fitting (optional, not mandatory)
3. Garden hose

To flush, start engine then immediately open the water tap.

⚠ CAUTION Certain components in the engine compartment may be very hot. Direct contact may result in skin burn. Do not touch any electrical parts or jet pump area when engine is running.

NOTICE Never flush a hot engine. Always start the engine before opening the water tap. Open water tap immediately after engine is started to prevent overheating.

Run the engine 90 seconds at idle speed.

NOTICE Never run engine without supplying water to the exhaust system when watercraft is out of water.

Ensure water flows out of jet pump while flushing. Otherwise, refer to an authorized Sea-Doo dealer for servicing.

NOTICE Never run engine longer than 2 minutes. Drive line seal has no cooling when watercraft is out of water.

Close the water tap, run the engine at 5000 RPM for 5 seconds and stop the engine.

NOTICE Always close the water tap before stopping the engine. If not, water will get inside the engine.

NOTICE Remove quick connect adapter after flushing operation (if used).

Ride Plate and Water Intake Grate

Ride Plate and Water Intake Grate Inspection

Inspect ride plate and jet pump water intake grate for damage. See your Sea-Doo dealer to have any damaged part repaired or replaced.

⚠ WARNING

The tether cord must always be removed from the engine cut-off switch prior to inspecting the intake grate.

TYPICAL — INSPECT THESE AREAS
1. *Water intake*
2. *Ride plate*

Sacrificial Anode

Sacrificial Anode Inspection

Sacrificial anodes are present on:
- Pump
- Ride plate
- Intercooler (1630 ACE HO engine).

Check for wear. If worn more than half, see an authorized Sea-Doo dealer for anode replacement.

Ski/Wakeboard Post (Wake)

Ski/Wakeboard Post Inspection

Check ski/wakeboard post operation. Ensure it slides up and down easily. Check locking mechanism operation. Check fasteners tightness. If something is found defective, don't use ski/wakeboard post and see an authorized Sea-Doo dealer for repair.

Ski/Wakeboard Post Lubrication

Clean ski/wakeboard post and apply a light coat of SUPER LUBE GREASE (P/N 293 550 030) or equivalent.

Lubricate post throughout its length.

Wipe off all excess grease and reinstall post.

Extend and retract several times to distribute the lubricant.

Fuses

Fuse Removal and Installation

Use the fuse remover/installer included in the fuse box to ease fuse removal.

Fuse Inspection

If an electrical problem occurs, check the fuses. If a fuse is burnt, replace by one of the same rating.

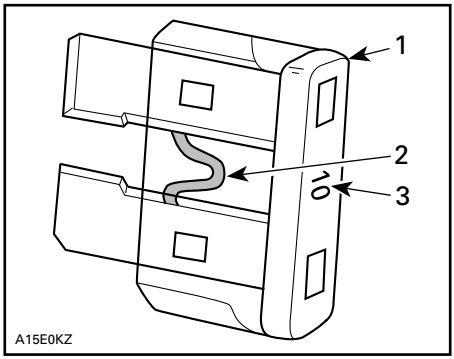

TYPICAL
1. *Fuse*
2. *Check if melted*
3. *Ampere rating*

⚠ WARNING

Do not use a higher rated fuse as this can cause severe damage. If a fuse has burnt out, the source of the malfunction should be determined and corrected before restarting. See an authorized Sea-Doo dealer for servicing.

Fuse Location

All fuses are located inside a single fuse box.

To access the fuse box:

Models with Suspension

Open the boarding platform.

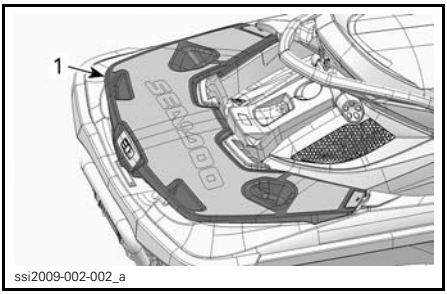

ssi2009-002-002_a

1. Boarding platform

Remove the two plastic rivets securing the RH aft storage bin and remove the storage bin from the fixed deck. The fuse box is located just under the storage bin, attached to the front of the battery holder.

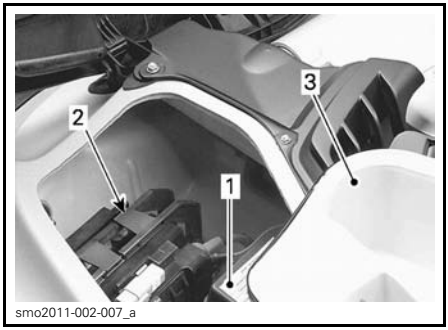

smo2011-002-007_a

TYPICAL
1. Fuse box
2. Battery holder
3. Storage bin

Models Without Suspension

Open or remove seat.

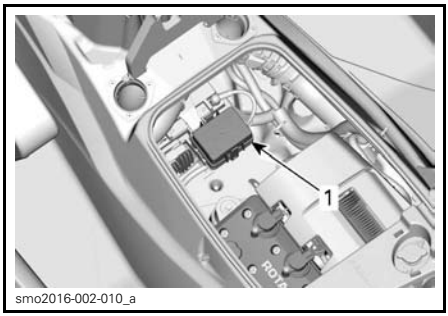

smo2016-002-010_a

TYPICAL
1. Fuse box

All Models

To remove a fuse box cover, squeeze locking tabs together, hold and pull fuse box cover to open.

NOTE: Fuse ratings and positions are illustrated on the fuse box cover.

Fuse Description

FUSE	RATING	DESCRIPTION
1	5A	iS Control (intelligent Suspension) (GTX Limited iS only)
2	15 A	Diagnostic connector
3	3 A	START/STOP button

FUSE	RATING	DESCRIPTION
4	3 A	GPS
5	30 A	iBR
6	30 A	Charge
7	30 A	iS
8	30 A	Battery
9	—	Not used
10	—	Not used
11	3 A	Depth sounder (if so equipped)
12	3 A	Gauge, OTAS and CAPS
13	10 A	Cylinder 1 (ignition coil and injection)
14	10 A	Cylinder 2 (ignition coil and injection)
15	10 A	Cylinder 3 (ignition coil and injection)
16	5 A	Starter solenoid
17	5 A	iBR control
18	10 A	Fuel pump
19	15 A	ECM

Remove the watercraft from the water every day.

Post-Operation Care

Exhaust System Flushing

The exhaust system should be flushed daily when watercraft is used in salt or foul water.

Refer to *MAINTENANCE PROCEDURES*.

NOTE: On supercharged models, the intercooler is flushed at the same time.

Additional Care for Foul Water or Salt Water Operation

When the watercraft is operated in foul water and particularly in salt water, additional care should be taken to protect the watercraft and its components.

Rinse watercraft bilge area with fresh water.

Never use a high pressure washer to clean the bilge. **USE LOW PRESSURE ONLY (such as a garden hose).**

High pressure can cause damages to electrical or mechanical systems.

⚠ CAUTION Allow engine to cool before performing any maintenance.

NOTICE Failure to perform proper care such as: watercraft rinsing, exhaust system flushing and anticorrosion treatment, when watercraft is used in salt water, will result in damage to the watercraft and its components. Never leave the watercraft stored in direct sunlight.

Watercraft Cleaning

Body and Hull

Occasionally, wash the hull and various body components with water and soap (use only mild detergent). Remove any marine organisms from engine and/or hull. Apply non-abrasive wax such as silicone wax.

NOTICE Never clean fiberglass and plastic parts with strong detergent, degreasing agent, paint thinner, acetone, or other strong chemical or petroleum type cleaner.

Stains may be removed from the seat and fiberglass using XPS ALL PURPOSE CLEANER (P/N 219 701 709) or the equivalent.

To clean the carpets, use 3M™ Citrus Base Cleaner (24 oz spray can) or an equivalent.

⚠ WARNING

Never apply plastic or vinyl protector on the carpets or seat as the surface will become slippery and the occupants may slip off the watercraft.

Respect the environment by ensuring fuel, oil or cleaning solutions do not drain into the waterways.

Speed-Tie Rope

A minimum of maintenance is required to keep the speed-tie unit and the mooring rope in serviceable condition.

Clean the locking mechanism and mooring rope with fresh water to remove salt, sand or other deposits.

NOTICE Do not use a high pressure washer to clean the speed-tie unit.

Let dry.

Storage

⚠ WARNING

Because fuel and oil are flammable, you should have an authorized Sea-Doo dealer, repair shop, or person of your own choosing to inspect the fuel system integrity as specified in the periodic inspection chart.

It is recommended that the watercraft be serviced by an authorized Sea-Doo dealer, repair shop, or person of your own choosing for storage, however the following operations can be performed by you with a minimum of tools.

NOTE: Carry out the following tasks in the same order as detailed in this section.

NOTICE **Do not run the engine during the storage period.**

Propulsion System

Jet Pump Cleaning

Clean jet pump by spraying water in its inlet and outlet and then apply a coat of XPS LUBE (P/N 293 600 016) or equivalent.

⚠ WARNING

Always remove tether cord from the engine cut-off switch to prevent unexpected engine starting before cleaning the jet pump area. Engine must not be running for this operation.

Jet Pump Inspection

See your authorized Sea-Doo dealer.

Fuel System

Fuel System Protection

XPS FUEL STABILIZER (P/N 413 408 601) (or equivalent) should be added in the fuel tank to prevent fuel deterioration and fuel system gumming. Follow stabilizer manufacturers' instructions for proper use.

NOTICE **It is highly recommended to add fuel stabilizer at storage in order to maintain fuel system in good condition. Fuel stabilizer should be added prior to engine lubrication and fuel tank top up to ensure fuel system components protection against varnish deposits.**

Fill up fuel tank completely as explained in *FUELING* section. Make sure there is no water inside fuel tank.

NOTICE **Should any water be trapped inside fuel tank, severe internal damage will occur to the fuel injection system.**

Engine and Exhaust

Exhaust System Flushing

Perform procedure as described in *MAINTENANCE PROCEDURES*.

Engine Oil and Filter Replacement

The oil change and filter replacement may be performed by an authorized Sea-Doo dealer, repair shop, or person of your own choosing.

Models with 260 and 300 Engine

It is important to expel any trapped water that may have accumulated from condensation in the intercooler.

Proceed as follows:

Models With Suspension

1. Open the boarding platform and remove the RH storage bin.

Models Without Suspension

2. Lift seat.

All Models

3. Ensure there is an alignment line drawn on the intercooler inlet hose. This will ensure the hose is not twisted or kinked on reinstallation.
4. Loosen the clamp retaining the intercooler inlet hose.
5. Remove the intercooler inlet hose from the intercooler.

NOTE: This hose feeds the hot, compressed air from the engine supercharger to the intercooler inlet.

6. For iS models, drape a couple of shop rags or a plastic bag over the iS module to protect it from any expelled water from the intercooler.

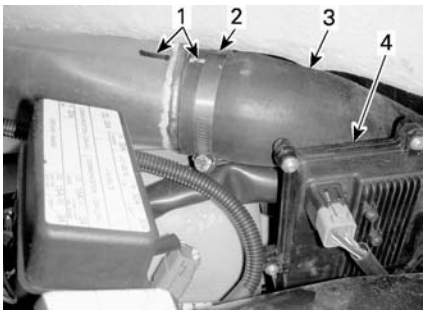

smo2009-002-151_a

TYPICAL - 1503 4-TEC ENGINES WITH SUSPENSION
1. *Hose alignment lines*
2. *Hose clamp*
3. *Intercooler inlet hose*
4. *iS module*

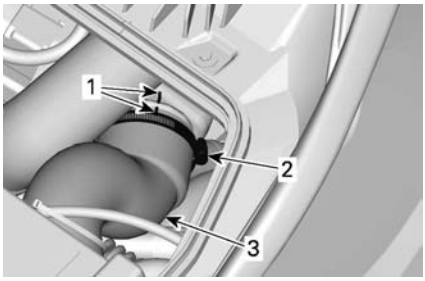

smo2016-002-499_a

TYPICAL - 1630 ACE HO ENGINES
1. *Hose alignment lines*
2. *Hose clamp*
3. *Intercooler inlet hose*

Models With Suspension

7. Start and rev the engine up to 4000 RPM several times.

NOTE: Ensure air intake system does not aspirate foreign objects which may cause severe engine or damage.

8. Stop engine.

Models Without Suspension

9. The 1630 ACE HO engine intercooler air side is self-draining into the intercooler inlet-side manifold. By disconnecting the intercooler inlet hose, the presence of condensated water can be visually assessed and properly drained off without the engine running.
10. Reinstall the intercooler air outlet hose, ensure it is properly aligned as prior to removal to ensure proper engine operation.

Exhaust System Draining

In areas where temperature may freeze, water trapped in the exhaust system and intercooler must be removed.

Using the flushing connector located on the port (LH) side of the stern, inject pressurized air at 379 kPa (55 PSI) into system until there is no more water flowing from jet pump.

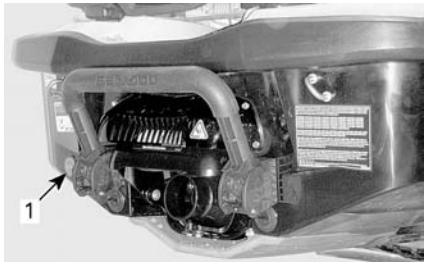

smo2009-002-132_c

TYPICAL
1. *Flushing connector*

The following hose can be fabricated to ease draining procedure.

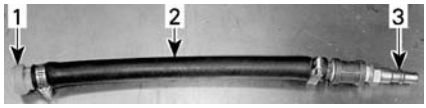

smo2008-001-053_a

TYPICAL
1. *Flushing connector adapter*
2. *Hose 12.7 mm (1/2 in)*
3. *Air hose male adapter*

NOTICE **Failure to drain the exhaust system may cause severe damage to the intercooler (supercharged models) and exhaust manifold.**

Remove special tools.

Engine Internal Lubrication

1. Open the seat.

Remove the air ventilation box over the engine (as applicable).

2. Remove ignition coils, refer to *MAINTENANCE PROCEDURES*.
3. Remove spark plugs, refer to *MAINTENANCE PROCEDURES*.
4. Spray XPS LUBE (P/N 293 600 016) or equivalent in spark plug holes.
5. To prevent fuel from being injected and to disable the ignition during engine cranking, fully depress throttle lever and HOLD against handlebar.
6. Press the START/STOP button to crank the engine a few turns. This will distribute the oil on the cylinder walls.
7. Apply anti-seize lubricant on spark plug threads, then reinstall them in the engine. Refer to *MAINTENANCE PROCEDURES*.
8. Install the ignition coils, refer to *MAINTENANCE PROCEDURES*.

Engine Coolant Test

If antifreeze is not replaced, test its density.

The antifreeze replacement and a density test should be performed by an authorized Sea-Doo dealer.

NOTE: Antifreeze should be replaced every 300 hours or every 5 years to prevent antifreeze deterioration.

NOTICE **Improper antifreeze density may result in freezing of the liquid in the cooling system if the watercraft is stored in an area where the freezing point is attained. This would seriously damage the engine.**

Electrical System

Battery Removal and Charging

Contact your authorized Sea-Doo dealer.

⚠ WARNING

Never charge or boost the battery while installed in the watercraft.

Engine Compartment

Engine Compartment Cleaning

Clean the bilge with hot water and detergent or with bilge cleaner. Rinse thoroughly. Lift front end of watercraft to completely drain bilge through the bilge drain plugs.

Anticorrosion Treatment

Wipe off any residual water in the engine compartment.

Spray XPS LUBE (P/N 293 600 016) or equivalent over all metallic components in engine compartment.

NOTE: The seat should be left partially open during storage. This will prevent engine compartment condensation and possible corrosion.

Body and Hull

Body and Hull Cleaning

Wash the body with a soap and water solution (use only mild detergent). Rinse thoroughly with fresh water. Remove marine organisms from the hull.

NOTICE **Never clean fiberglass and plastic parts with strong detergent, degreasing agent, paint thinner, acetone, or other strong chemical or petroleum cleaners.**

Body and Hull Repair

If any repairs are needed to body components or to the hull, contact your authorized Sea-Doo dealer.

Body and Hull Protection

Apply a good quality marine wax to the body.

If the watercraft is to be stored outside, cover it with an opaque tarpaulin to prevent sun rays and grime from affecting the plastic components, watercraft finish, as well as preventing dust accumulation.

NOTICE **The watercraft should never be left in water for storage. Never leave the watercraft stored in direct sunlight. Never store watercraft in a plastic bag.**

Preseason Preparation

Maintenance preparation must be performed in conjunction with *MAINTENANCE SCHEDULE*.

Ensure to perform all tasks included in the **100 HOURS OR 1 YEAR** table.

Preseason maintenance preparation may be performed by an authorized Sea-Doo dealer, repair shop or person of your own choosing.

NOTE: Though not required, it is recommended that an authorized Sea-Doo dealer perform preseason maintenance preparation at the same time that any safety-related factory campaigns are performed by the authorized Sea-Doo dealer.

⚠ WARNING

Only perform procedures as detailed in the *MAINTENANCE SCHEDULE*. It is recommended that the assistance of an authorized Sea-Doo dealer be periodically obtained on other components and systems not covered in this guide.

NOTICE **When component conditions seem less than satisfactory, replace using genuine BRP parts, or equivalents.**

TECHNICAL INFORMATION

WATERCRAFT IDENTIFICATION

The main components of the watercraft (engine and hull) are identified by different serial numbers. It may sometimes become necessary to locate these numbers for warranty purposes or to trace the watercraft in the event of theft.

Hull Identification Number

The Hull Identification Number (HIN) is located on footboard at the rear of watercraft.

TYPICAL
1. Hull Identification Number (HIN)

It is composed of 12 digits:

YDV	12345	L	8	09	
					Model year
					Year of production
					Month of production
					Serial number (a letter may also be used as a digit)
					Manufacturer

Engine Identification Number

The Engine Identification Number (EIN) is located on the front end of the engine.

TYPICAL
1. Engine Identification Number (EIN)

RF D.E.S.S. KEY

Radio Frequency Digitally Encoded Security System (RF D.E.S.S.)

Industries Canada Certification: 12006A-M01456

This device complies with RSS-GEN and RSS-210 of Industry Canada.

FCC Certification: 2ACERM01456

The following device is in compliance with FCC part 15C.

Warning to the user: Any changes /modifications not approved by the manufacturer could void the user's authority to operate the equipment.

European Conformity:

The following device is in compliance with the following standards:

ETSI EN 300 330-2

ETSI EN 60950-1

ENGINE EMISSIONS INFORMATION

Manufacturer's Responsibility

Beginning with 1999 model year engines, PWC manufacturers of marine engines must determine the exhaust emission levels for each engine horsepower family and certify these engines with the United States of America Environmental Protection Agency (EPA). An emissions control information label, showing emission levels and engine specifications, must be placed on each watercraft at the time of manufacture.

Dealer's Responsibility

When performing service on all 1999 and more recent Sea-Doo watercraft that carry an emissions control information label, adjustments must be kept within published factory specifications.

Replacement or repair of any emission related component must be executed in a manner that maintains emission levels within the prescribed certification standards.

Dealers are not to modify the engine in any manner that would alter the horsepower or allow emission levels to exceed their predetermined factory specifications.

Exceptions include manufacturer's prescribed changes, such as altitude adjustments for example.

Owner Responsibility

The owner/operator is required to have engine maintenance performed to maintain emission levels within prescribed certification standards.

The owner/operator is not to, and should not allow anyone to modify the engine in any manner that would alter the horsepower or allow emissions levels to exceed their predetermined factory specifications.

EPA Emission Regulations

All 1999 and more recent Sea-Doo watercraft manufactured by BRP are certified to the EPA as conforming to the requirements of the regulations for the control of air pollution from new watercraft engines. This certification is contingent on certain adjustments being set to factory standards. For this reason, the factory procedure for servicing the product must be strictly followed and, whenever practicable, returned to the original intent of the design.

The responsibilities listed above are general and in no way a complete listing of the rules and regulations pertaining to the EPA requirements on exhaust emissions for marine products. For more detailed information on this subject, you may contact:

U.S. Environmental Protection Agency
Office of Transportation and Air Quality
1200 Pennsylvania Ave. NW
Mail Code 6403J
Washington D.C. 20460

EPA INTERNET WEB SITE:
http://www.epa.gov/otaq

SPECIFICATIONS

1503 4-TEC engines

ENGINE		
Engine type		ROTAX® 1503 4-TEC™, 4-stroke, Single Over Head Camshaft (SOHC)
Declared Power[1]	155	106 kW @ 7300 RPM
	215	152 kW @ 8000 RPM
	260	179 kW @ 8000 RPM
Induction	155	Naturally-Aspirated
	215/260	Supercharged intercooled
Number of cylinders		3
Number of valves		12 valves with hydraulic lifters (no adjustment)
Bore		100 mm (3.9 in)
Stroke		63.4 mm (2.5 in)
Displacement		1 493.8 cm³ (91 in³)
Compression ratio	155	10.6:1
	215/260	8.4:1

[1] Declared power as per ISO 8665 at propeller-shaft.

LUBRICATION SYSTEM		
Lubrication	Oil type	XPS 4-stroke synthetic blend oil (summer) (P/N 293 600 121) or a 10W40 **mineral** engine oil compatible with wet clutches
	Capacity	3 L (3.2 qt (U.S. liq.)) oil change w/filter 4.8 L (5.1 qt (U.S. liq.))total

COOLING SYSTEM	
Type	Closed loop cooling system
Coolant	See *ENGINE COOLANT* in the *MAINTENANCE PROCEDURES* section of this guide
Cooling system capacity	5.5 L (5.8 qt (U.S. liq.)) total

FUEL SYSTEM			
Fuel injection type			Multipoint fuel injection with iTC (intelligent Throttle Control). Single throttle body (60 mm) with an actuator
Fuel type	Inside North America ((RON + MON)/2)	GTX 155 GTX S 155	87
		GTX LTD 215 RXT 260 GTR 215 Wake PRO 215 GTX LTD iS 260 RXT-X aS 260	91 or higher
	Outside North America (RON)	GTX 155 GTX S 155	91
		GTX LTD 215 RXT 260 GTR 215 Wake PRO 215 GTX LTD iS 260 RXT-X aS 260	95 or higher
Fuel tank capacity (including reserve)	GTX 155 GTX LTD 215 RXT 260 GTR 215 Wake PRO 215		60 L (16 U.S. gal.)
	GTX S 155 GTX LTD iS 260 RXT-X aS 260		70 L (18 U.S. gal.)

ELECTRICAL SYSTEM		
Ignition system type		IDI (Inductive Discharge Ignition)
Battery		12 V, 18 A•h
Spark plug	Make and type	NGK DCPR8E or equivalent
	Gap	0.7 mm to 0.8 mm (.028 in to .031 in)

PROPULSION		
Jet pump	Type	Axial flow single stage
Drive shaft	Coupling type	Crowned splines, direct drive

IBR AND VTS	
VTS system	Electronically-controlled through the VTS control button with 2 preset positions

WEIGHT AND LOADING CAPACITY		
Dry weight	GTX	399 kg (879 lb)
	GTX S	462 kg (1,018 lb)
	GTX LTD RXT RXT RS WAKE PRO	406 kg (894 lb)
	GTX LTD iS	471 kg (1,038 lb)
	RXT-X aS RXT-X aS RS	466 kg (1,028 lb)
Number of passenger (driver incl.)		3
Load limit (passenger(s) and luggages)	GTX S GTX LTD iS RXT-X aS RXT-X aS RS	227 kg (500 lb)
	GTX GTX LTD RXT RXT RS WAKE PRO	272 kg (600 lb)
Storage capacity	GTX S GTX LTD iS RXT-X aS RXT-X aS RS	63 L (16.6 U.S. gal.)
	GTX GTX LTD RXT RXT RS WAKE PRO	162 L (42.8 U.S. gal.)

DIMENSIONS		
Overall length		353.5 cm (139.2 in)
Overall width		122.4 cm (48.2 in)
Overall height	GTX GTX LTD RXT RXT RS WAKE PRO	116.6 cm (45.9 in)
	GTX S GTX LTD iS	111.4 cm (43.9 in)
	RXT-X aS RXT-X aS RS	118.1 cm (46.5 in)

MATERIALS	
Impeller material	Stainless steel
Impeller housing/stator	Aluminum/aluminum

1630 ACE HO engines

ENGINE	
Engine type	ROTAX® 1630 ACE™ HO, 4-stroke, Single Over Head Camshaft (SOHC)
Declared Power[1]	217 kW @ 8000 RPM
Induction	Supercharged intercooled
Number of cylinders	3
Number of valves	12 valves with hydraulic lifters (no adjustment)
Bore	100 mm (3.9 in)
Stroke	69.2 mm (2.7 in)
Displacement	1 630.5 cm³ (99.5 in³)
Compression ratio	8.4:1

[1] Declared power as per ISO 8665 at propeller-shaft.

LUBRICATION SYSTEM		
Lubrication	Oil type	XPS 4-stroke synthetic blend oil (summer) (P/N 293 600 121) or a 10W40 **mineral** engine oil compatible with wet clutches such as JASO MA certified oils.
	Capacity	3 L (3.2 qt (U.S. liq.)) oil change w/filter 5 L (5.3 qt (U.S. liq.))total

COOLING SYSTEM	
Type	Closed loop cooling system
Coolant	See *ENGINE COOLANT* in the *MAINTENANCE PROCEDURES* section of this guide
Cooling system capacity	5.5 L (5.8 qt (U.S. liq.)) total

FUEL SYSTEM		
Fuel injection type		Multipoint fuel injection with iTC (intelligent Throttle Control). Single throttle body (60 mm (2.36 in)) with an actuator
Fuel type	Inside North America ((RON + MON)/2)	91 or higher
	Outside North America (RON)	95 or higher
Fuel tank capacity (including reserve)		60 L (16 U.S. gal.)

ELECTRICAL SYSTEM		
Ignition system type		IDI (Inductive Discharge Ignition)
Battery		Sealed, 12 V, 18 A•h
Spark plug	Make and type	NGK KR9C-G or equivalent
	Gap	0.7 mm to 0.8 mm (.028 in to .031 in)

PROPULSION		
Jet pump	Type	Axial flow single stage
Drive shaft	Coupling type	Crowned splines, direct drive

IBR AND VTS	
VTS system	Electronically-controlled through the VTS control button with 2 preset positions

WEIGHT AND LOADING CAPACITY		
Dry weight	GTX Limited	412 kg (909 lb)
	RXT-X Series	415 kg (914 lb)
Number of passenger (driver incl.)	GTX Limited RXT-X Series	3
Load limit (passenger and luggages)	GTX Limited RXT-X Series	272 kg (600 lb)
Storage capacity	GTX Limited RXT-X Series	162 L (42.8 U.S. gal.)

DIMENSIONS		
Overall length	GTX Limited RXT-X Series	353.5 cm (139 in)
Overall width	GTX Limited RXT-X Series	122.4 cm (48.2 in)
Overall height	GTX Limited	116.6 cm (45.9 in)
	RXT-X Series	118.1 cm (46.5 in)

MATERIALS	
Impeller material	Stainless steel
Impeller housing/stator	Aluminum/aluminum

NOTE: BRP reserves the right to make changes in design and specifications and/or to make additions to, or improvements in its products without imposing any obligation upon itself to install them on its products previously manufactured.

TROUBLESHOOTING

TROUBLESHOOTING GUIDELINES

ENGINE WILL NOT START

1. Tether cord removed.
   - *Press START/STOP button.*
   - *Install tether cord cap over engine cut-off switch within 5 seconds after depressing the START/STOP button.*
   - *After double "beep", press START/STOP button.*
2. ECM does not recognize the D.E.S.S. key.
   - *Refer to an authorized Sea-Doo dealer.*
3. Burnt fuse: main, electric starter or ECM.
   - *Check wiring then replace fuse(s).*
4. Discharged battery.
   - *Refer to an authorized Sea-Doo dealer.*

⚠ WARNING

Do not charge or boost the battery while installed on the watercraft. Electrolyte is poisonous and dangerous. Avoid contact with eyes, skin and clothing.

5. Battery connections, corroded or loose. Bad ground.
   - *Refer to an authorized Sea-Doo dealer.*
6. Water-flooded engine.
   - *Refer to WATER-FLOODED ENGINE in SPECIAL PROCEDURES.*
7. Faulty sensor or ECM.
   - *Seek service from an authorized Sea-Doo dealer, repair shop, or person of your own choosing for maintenance, repair, or replacement. Please refer to the US EPA EMISSIONS-RELATED WARRANTY contained herein for information about warranty claims.*
8. Seized jet pump.
   - *Try to clean. Otherwise, refer to an authorized Sea-Doo dealer.*

ENGINE CRANKS SLOWLY

1. Loose battery cable connections.
   - *Check/clean/tighten.*
2. Discharged or weak battery.
   - *Refer to an authorized Sea-Doo dealer.*
3. Worn starter.
   - *Refer to an authorized Sea-Doo dealer.*

ENGINE TURNS NORMALLY BUT WILL NOT START

1. Fuel tank empty or water-contaminated.
   - *Refill. Siphon and fill with fresh fuel.*

ENGINE TURNS NORMALLY BUT WILL NOT START (cont'd)

2. Fouled/defective spark plugs.
   – *Replace.*
3. Blown fuse.
   – *Check wiring then replace fuse(s).*
4. Water-flooded engine.
   – *Refer to WATER-FLOODED ENGINE in SPECIAL PROCEDURES.*
5. Engine management system fault detected (check engine pilot lamp is ON).
   – *Seek service from an authorized Sea-Doo dealer, repair shop, or person of your own choosing for maintenance, repair, or replacement. Please refer to the US EPA EMISSIONS-RELATED WARRANTY contained herein for information about warranty claims.*
6. Faulty fuel pump.
   – *Seek service from an authorized Sea-Doo dealer, repair shop, or person of your own choosing for maintenance, repair, or replacement. Please refer to the US EPA EMISSIONS-RELATED WARRANTY contained herein for information about warranty claims.*

ENGINE MISFIRES, RUNS IRREGULARLY

1. Fouled/defective/worn spark plugs.
   – *Replace.*
2. Fuel: Level too low, stale or water-contaminated.
   – *Siphon and/or refill.*
3. Faulty ignition coil(s).
   – *Seek service from an authorized Sea-Doo dealer, repair shop, or person of your own choosing for maintenance, repair, or replacement. Please refer to the US EPA EMISSIONS-RELATED WARRANTY contained herein for information about warranty claims.*
4. Clogged injectors.
   – *Seek service from an authorized Sea-Doo dealer, repair shop, or person of your own choosing for maintenance, repair, or replacement. Please refer to the US EPA EMISSIONS-RELATED WARRANTY contained herein for information about warranty claims.*
5. Engine management system fault detected (check engine pilot lamp is ON).
   – *Refer to MONITORING SYSTEM.*

ENGINE SMOKE

1. Oil level too high.
   – *Seek service from an authorized Sea-Doo dealer, repair shop, or person of your own choosing for maintenance, repair, or replacement. Please refer to the US EPA EMISSIONS-RELATED WARRANTY contained herein for information about warranty claims.*

ENGINE SMOKE (cont'd)

2. Water ingestion, coolant leak or damaged cylinder head gasket.
   – *Seek service from an authorized Sea-Doo dealer, repair shop, or person of your own choosing for maintenance, repair, or replacement. Please refer to the US EPA EMISSIONS-RELATED WARRANTY contained herein for information about warranty claims.*
3. Internal engine damage.
   – *Seek service from an authorized Sea-Doo dealer, repair shop, or person of your own choosing for maintenance, repair, or replacement. Please refer to the US EPA EMISSIONS-RELATED WARRANTY contained herein for information about warranty claims.*

ENGINE OVERHEATS

1. Clogged exhaust system.
   – *Flush exhaust system.*
2. Engine coolant level too low.
   – *Refer to MAINTENANCE PROCEDURES.*
3. Quick connect adapter left in flushing connector.
   – *Remove adapter from flushing connector and retry watercraft. If problem persists, seek service from an authorized Sea-Doo dealer, repair shop, or person of your own choosing for maintenance, repair, or replacement. Please refer to the US EPA EMISSIONS-RELATED WARRANTY contained herein for information about warranty claims.*

ENGINE LACKS ACCELERATION OR POWER

1. Learning key used.
   – *Use a Normal key.*
2. Not in Sport mode.
   – *Select Sport mode.*
3. Jet pump water intake clogged.
   – *Clean. Refer to JET PUMP WATER INTAKE AND IMPELLER CLEANING in SPECIAL PROCEDURES section.*
4. Damaged impeller or worn-out wear ring.
   – *Replace. Refer to an authorized Sea-Doo dealer.*
5. Engine oil level too high.
   – *Seek service from an authorized Sea-Doo dealer, repair shop, or person of your own choosing for maintenance, repair, or replacement. Please refer to the US EPA EMISSIONS-RELATED WARRANTY contained herein for information about warranty claims.*
6. Weak spark.
   – *Refer to ENGINE MISFIRES, RUNS IRREGULARLY.*
7. Engine management system fault detected (check engine pilot lamp is ON).
   – *Refer to MONITORING SYSTEM.*

ENGINE LACKS ACCELERATION OR POWER (cont'd)

8. Clogged injectors.
   – *Seek service from an authorized Sea-Doo dealer, repair shop, or person of your own choosing for maintenance, repair, or replacement. Please refer to the US EPA EMISSIONS-RELATED WARRANTY contained herein for information about warranty claims.*
9. Low fuel pressure.
   – *Seek service from an authorized Sea-Doo dealer, repair shop, or person of your own choosing for maintenance, repair, or replacement. Please refer to the US EPA EMISSIONS-RELATED WARRANTY contained herein for information about warranty claims.*
10. Water in fuel.
   – *Siphon and replace.*
11. Engine damaged by water ingestion.
   – *Refer to an authorized Sea-Doo dealer.*

WATERCRAFT CAN NOT REACH TOP SPEED

1. Jet pump water intake clogged.
   – *Clean. Refer to JET PUMP WATER INTAKE AND IMPELLER CLEANING in SPECIAL PROCEDURES section.*
2. Damaged impeller or worn-out wear ring.
   – *Replace. Refer to an authorized Sea-Doo dealer.*
3. Engine management system fault detected (check engine pilot lamp is ON).
   – *Refer to MONITORING SYSTEM.*
4. Faulty supercharger and/or intercooler (supercharged models).
   – *Seek service from an authorized Sea-Doo dealer, repair shop, or person of your own choosing for maintenance, repair, or replacement. Please refer to the US EPA EMISSIONS-RELATED WARRANTY contained herein for information about warranty claims.*

WATERCRAFT STAYS IN NEUTRAL AFTER OPERATING THE IBR LEVER

1. The iBR gate stays in neutral.
   – *Release the throttle to idle RPM.*
   – *Press the CRUISE button to activate the slow speed mode.*
   – *Return to shore using the slow speed mode. Refer to an authorized Sea-Doo dealer.*

iBR WILL NOT RETURN TO NEUTRAL POSITION (IBR INDICATOR LIGHT ON)

1. iBR jammed with debris.
   – *Clean and check for damage in the iBR gate and nozzle area.*
2. iBR system malfunction.
   – *Remove tether cord, wait four minutes, reinstall key and check iBR light to ensure fault is cleared.*
   – *Refer to an authorized Sea-Doo dealer if fault persists or reoccurs frequently.*

iBR WILL NOT RETURN TO NEUTRAL POSITION (IBR INDICATOR LIGHT OFF)

1. Throttle lever not fully released during operation.
   – *Release throttle lever fully to ensure iBR gate returns to neutral.*
2. Throttle lever does not fully return to null when released.
   – *Refer to an authorized Sea-Doo dealer.*

ABNORMAL NOISE FROM PROPULSION SYSTEM

1. Weeds or debris jammed around impeller.
   – *Clean. Refer to JET PUMP WATER INTAKE AND IMPELLER CLEANING in SPECIAL PROCEDURES section.*
   – *Ceck for damage.*
2. Damaged impeller shaft or drive shaft.
   – *Refer to an authorized Sea-Doo dealer.*
3. Water intrusion in jet pump causing bearing seizure.
   – *Refer to an authorized Sea-Doo dealer.*

WATER FOUND IN BILGE

1. Bailer system malfunction.
   – *Have system inspected by an authorized Sea-Doo dealer.*
2. Exhaust system leak.
   – *Refer to an authorized Sea-Doo dealer.*
3. Carbon ring at drive shaft worn.
   – *Refer to an authorized Sea-Doo dealer.*

MONITORING SYSTEM

A system monitors the electronic components of the EMS (engine management system) iBR, iS, and other components of the electrical system. When a fault occurs, it sends visual messages through the information center and/or audible signals through a beeper to inform you of a particular condition.

A fault code may also be recorded.

When a minor or transient fault occurs, the fault message and beeper will cease automatically if the condition that caused the fault does not exist anymore.

Releasing the throttle and letting the engine return to idle speed may allow normal operation to come back. If this does not work, try removing and reinstalling the tether cord on the engine cut-off switch.

The electronic system will react differently depending on the fault type. In severe failure, the engine may not be allowed to be started. In other cases, the engine will operate in limp home mode (reduced speed).

When a fault occurs,please refer to the *US EPA EMISSIONS-RELATED WARRANTY* contained herein for information about warranty claims..

Fault Codes

When a fault occurs, a numerical fault code may be recorded depending on the fault type and system.

These fault codes are used by authorized Sea-Doo dealers for troubleshooting the watercraft systems when comparing them to a fault list.

Fault codes can be viewed in the information center multifunction display however, this function is only available if a fault is still active.

If there is an active fault code, it may be viewed by the operator on the multifunction display. The operator may then choose to call his authorized Sea-Doo dealer to pass on the fault code. The dealer will then advise the operator on the steps to take to solve the problem, or to stop using the watercraft and to bring it in to the dealer for repairs.

Displaying Fault Codes

Press the MODE button repeatedly until the FAULT CODE function is visible in the multifunction display.

Press the SET or the UP or DOWN button to enter the function and display the first fault code, then press the UP or DOWN button repeatedly to display each subsequent code.

NOTE: When the last fault code has been displayed and the button is pressed again, the system loops back to the first fault code displayed, and all fault codes can again be displayed. If there was one active fault code when entering the FAULT CODE mode, and it becomes occurred (no longer active), a NO ACTIVE FAULT CODE message will scroll in the display.

To exit the FAULT CODE display function, the MODE or SET button must be pressed once. There is no time out on this function.

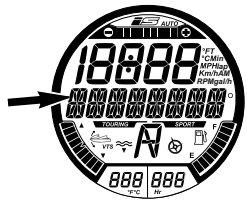

MESSAGE DISPLAYED
FAULT CODE message is displayed here

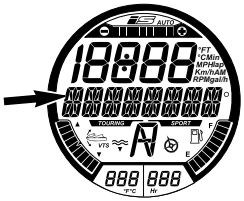

APPLICABLE FAULT CODE IS DISPLAYED HERE

Indicator Lights and Message Display Information

The indicator lights (pilot lamps) and messages displayed in the information center will inform you of a particular condition or if an anomaly occurs.

For information on usual indicator lights, refer to *INFORMATION CENTER (GAUGE)*.

PILOT LAMPS (ON)	MESSAGE DISPLAY	DESCRIPTION
	LOW or HIGH BATTERY VOLTAGE	Low/high battery voltage
	HIGH TEMPERATURE	Engine or exhaust system overheating
	CHECK ENGINE or LIMP HOME MODE	Check engine (minor fault req. maint.) or LIMP HOME MODE (major eng. fault)
	LOW OIL PRESSURE	Low oil pressure
	IBR MODULE ERROR	Light is steady with a buzzer and a check engine light: iBR system fault (refer to an authorized Sea-Doo dealer)
	_	Light is flashing: iBR system fault (refer to an authorized Sea-Doo dealer)
	_	Light is steady with no buzzer: iBR system still functional but needs to be inspected by an authorized Sea-Doo dealer
O.T.A.S.	_	OTAS system fault

MESSAGE DISPLAY INFORMATION	
RIGHT KEYPAD ERROR	Gauge control button malfunction
LOW OIL PRESSURE	Engine low oil pressure detected
HIGH EXHAUST TEMPERATURE	High exhaust temperature detected
HIGH TEMPERATURE	High engine temperature detected
CHECK ENGINE	Engine system malfunction or maintenance required
HIGH BATTERY VOLTAGE	High battery voltage detected
LOW BATTERY VOLTAGE	Low battery voltage detected
LIMP HOME MODE	Major fault detected, engine power limited
FUEL SENSOR DEFECTIVE	Fuel level sensor fault
WATER TEMP SENSOR DEFECTIVE	Problem in iBR, not sending water temperature info.
CALIBRATION CHECKSUM ERROR	Cluster programming corrupted
IBR MODULE ERROR	iBR system malfunction
MAINTENANCE REQUIRED	Watercraft maintenance required

NOTICE Running engine with low oil pressure may severely damage the engine.

Beeper Code Information

BEEPER CODES	DESCRIPTION
1 long beep (while installing tether cord on watercraft engine cut-off switch)	**Bad D.E.S.S. system connection.** Reinstall tether cord cap correctly on the engine cut-off switch.
	Wrong D.E.S.S. key. Use a tether cord that has been programmed for the watercraft.
	Defective D.E.S.S. key. Use another tether cord with programmed D.E.S.S. key.
	Defective engine cut-off switch. Refer to an authorized Sea-Doo dealer.
	Improper operation of ECM or defective wiring harness. Seek service from an authorized Sea-Doo dealer, repair shop, or person of your own choosing for maintenance, repair, or replacement. Please refer to the *US EPA EMISSIONS-RELATED WARRANTY* contained herein for information about warranty claims.
A 2 seconds beep every 15 minutes interval	**Watercraft is upside down.** Turn watercraft upright. Refer to *SPECIAL PROCEDURES*.
	Engine management system fault. Seek service from an authorized Sea-Doo dealer, repair shop, or person of your own choosing for maintenance, repair, or replacement. Please refer to the *US EPA EMISSIONS-RELATED WARRANTY* contained herein for information about warranty claims.
	iBR system fault. Refer to an authorized Sea-Doo dealer.
A 2 seconds beep every 5 minutes interval	**Low fuel level.** Refill fuel tank. If problem persists, refer to an authorized Sea-Doo dealer.
	Fuel tank level sensor or circuit malfunction. Refer to an authorized Sea-Doo dealer.

BEEPER CODES	DESCRIPTION
Continuously beeps	**High engine temperature coolant.** See *ENGINE OVERHEATING*.
	High exhaust temperature. Seek service from an authorized Sea-Doo dealer, repair shop, or person of your own choosing for maintenance, repair, or replacement. Please refer to the *US EPA EMISSIONS-RELATED WARRANTY* contained herein for information about warranty claims.
	Low oil pressure. Turn off engine as soon as possible. Check oil level and refill. Seek service from an authorized Sea-Doo dealer, repair shop, or person of your own choosing for maintenance, repair, or replacement. Please refer to the *US EPA EMISSIONS-RELATED WARRANTY* contained herein for information about warranty claims.

NOTICE If the monitoring beeper continuously sounds, stop engine as soon as possible.

This page is intentionally blank

WARRANTY

BRP LIMITED WARRANTY – USA AND CANADA: 2016 SEA-DOO® PERSONAL WATERCRAFT

1. SCOPE

Bombardier Recreational Products Inc. ("BRP")* warrants its model-year 2016 Sea-Doo personal watercraft sold by authorized BRP Dealers (as defined below) in the United States of America ("USA") and in Canada from defects in material or workmanship for the period and under the conditions described below. This limited warranty will become null and void if: (1) the Sea-Doo personal watercraft was used for racing or any other competitive activity, at any point, even by a previous owner; or (2) the Sea-Doo personal watercraft has been altered or modified in such a way so as to adversely affect its operation, performance or durability, or has been altered or modified to change its intended use.

2. LIMITATIONS OF LIABILITY

THIS WARRANTY IS EXPRESSLY GIVEN AND ACCEPTED IN LIEU OF ANY AND ALL OTHER WARRANTIES, EXPRESSED OR IMPLIED, INCLUDING WITHOUT LIMITATION ANY WARRANTY OF MERCHANTABILITY OR FITNESS FOR A PARTICULAR PURPOSE. TO THE EXTENT THAT THEY CANNOT BE DISCLAIMED, THE IMPLIED WARRANTIES ARE LIMITED IN DURATION TO THE LIFE OF THE EXPRESS WARRANTY. INCIDENTAL AND CONSEQUENTIAL DAMAGES ARE EXCLUDED FROM COVERAGE UNDER THIS WARRANTY. SOME STATES/PROVINCES DO NOT ALLOW FOR THE DISCLAIMERS, LIMITATIONS AND EXCLUSIONS IDENTIFIED ABOVE, AS A RESULT, THEY MAY NOT APPLY TO YOU. THIS WARRANTY GIVES YOU SPECIFIC RIGHTS, AND YOU MAY ALSO HAVE OTHER LEGAL RIGHTS WHICH MAY VARY FROM STATE TO STATE, OR PROVINCE TO PROVINCE.

Neither the distributor, any BRP dealer nor any other person has been authorized to make any affirmation, representation or warranty regarding the product, other than those contained in this limited warranty, and if made, shall not be enforceable against BRP. BRP reserves the right to modify this warranty at any time, being understood that such modification will not alter the warranty conditions applicable to the products sold while this warranty is in effect.

3. EXCLUSIONS – ARE NOT WARRANTED

The following are not warranted under any circumstances:

- Normal wear and tear;
- Routine maintenance items, tune ups, adjustments;
- Damage caused by failure to provide proper maintenance and/or storage, as described in the Operator's Guide;
- Damage resulting from removal of parts, improper repairs, service, maintenance, modifications or use of parts not manufactured or approved by BRP or resulting from repairs done by a person that is not an authorized servicing BRP dealer;
- Damage caused by abuse, abnormal use, neglect, or operation of the product in a manner inconsistent with the recommended operation described in the Operator's Guide;
- Damage resulting from accident, submersion, fire, theft, vandalism or any act of God;

– Operation with fuels, oils or lubricants which are not suitable for use with the product (see the Operator's Guide);
– Damage from rust, corrosion or exposure to the elements;
– Damage from cooling system or jet pump blockage by foreign material;
– Water damages caused by water ingestion;
– Damages related to gel coat finish including but not limited to cosmetic gel coat finish, blisters or fiberglass delamination caused by blisters, crazing, spider or hairline cracks; and
– Incidental or consequential damages, or damages of any kind including without limitation towing, storage, telephone, rental, taxi, inconvenience, insurance coverage, loan payments, loss of time, loss of income.

4. WARRANTY COVERAGE PERIOD

This limited warranty will be in effect from (1) the date of delivery to the first retail consumer or (2) the date the product is first put into use, whichever occurs first and for the applicable period below:

1. TWELVE (12) CONSECUTIVE MONTHS for private use owners.
2. FOUR (4) CONSECUTIVE MONTHS for commercial use owners. A personal watercraft is used commercially when it is used in connection with generating income or any work or employment during any part of the warranty period. A personal watercraft is also used commercially when, at any point during the warranty period, it has commercial tags or is licensed for commercial use. This is a minimal warranty period which can be extended by any applicable warranty promotional program, as the case may be.
3. For emission-related components; please also refer to the *US EPA EMISSION-RELATED WARRANTY* contained herein.
4. For Sea-Doo personal watercrafts produced by BRP for sale in the State of California or New York that are originally sold to a resident or subsequently warranty registered to a resident in the State of California or New York, please also refer to the applicable California and New York Emissions Control Warranty Statement contained herein.

The repair or replacement of parts or the performance of service under any applicable warranty does not extend the life of such warranty beyond its original expiration date.

5. CONDITIONS REQUIRED FOR WARRANTY COVERAGE

This limited warranty coverage is available **only** if **each** of the following conditions has been fulfilled:

– The 2016 Sea-Doo personal watercraft must be purchased as new and unused by its first owner from a BRP dealer authorized to distribute Sea-Doo personal watercraft in the country in which the sale occurred;
– The BRP specified predelivery inspection process must be completed and documented and signed by the purchaser;
– The 2016 Sea-Doo personal watercraft must have undergone proper registration by an authorized BRP dealer;

– The 2016 Sea-Doo personal watercraft must be purchased in the country in which the purchaser resides; and
– Routine maintenance outlined in the Operator's Guide must be timely performed in order to maintain warranty coverage. BRP reserves the right to make warranty coverage contingent upon proof of proper maintenance.

BRP will not honour this limited warranty to any private use owner or commercial use owner if one of the preceding conditions has not been met. Such limitations are necessary in order to allow BRP to preserve both the safety of its products, and also that of its consumers and the general public.

6. WHAT TO DO TO OBTAIN WARRANTY COVERAGE

The customer must cease using the Sea-Doo personal watercraft upon the appearance of an anomaly. The customer must notify an authorized servicing BRP dealer within three (3) days of the appearance of a defect, and provide it with reasonable access to the product and reasonable opportunity to repair it. The customer must also present to the authorized BRP dealer, proof of purchase of the product and must sign the repair/work order prior to the start of the repair in order to validate the warranty repair. All parts replaced under this limited warranty become the property of BRP.

7. WHAT BRP WILL DO

BRP's obligations under this warranty are limited to, at its sole discretion, repairing parts found defective under normal use, maintenance and service, or replacing such parts with new genuine BRP parts without charge for parts and labor, at any authorized BRP dealer during the applicable warranty coverage period under the conditions described herein. No claim of breach of warranty shall be the cause for cancellation or rescission of the sale of the Sea-Doo personal watercraft to the owner.

In the event that service is required outside of the country of original sale, the owner will bear responsibility for any additional charges due to local practices and conditions, such as, but not limited to freight, insurance, taxes, license fees, import duties, and any and all other financial charges, including those levied by governments, states, territories and their respective agencies.

BRP reserves the right to improve or modify products from time to time without assuming any obligation to modify products previously manufactured.

8. TRANSFER

If the ownership of a product is transferred during the warranty coverage period, this warranty shall also be transferred and be valid for the remaining coverage period provided that BRP is notified of such transfer of ownership in the following way:

1. The former owner contacts BRP (at the phone number provided below) or an authorized BRP dealer and gives the coordinates of the new owner; or
2. BRP or an authorized BRP dealer receives a proof that the former owner agreed to the transfer of ownership, in addition to the coordinates of the new owner.

9. CONSUMER ASSISTANCE

In the event of a controversy or a dispute in connection with this BRP limited warranty, BRP suggests that you try to resolve the issue at the dealership level. We recommend discussing the issue with the authorized BRP dealer's service manager or owner.

If the issue has not yet been resolved, please contact us:

http://www.sea-doo.com/form/contact-us.html

Tel.: 1-888-272-9222

* In the USA, products are distributed and serviced by BRP US Inc.

© 2015 Bombardier Recreational Products Inc. All rights reserved.
® Registered trademark of Bombardier Recreational Products Inc. or its affiliates.

US EPA EMISSION-RELATED WARRANTY

Bombardier Recreational Products Inc. (“BRP”)* warrants to the ultimate purchaser and each subsequent purchaser that this new engine, including all parts of its exhaust emission control system and its evaporative emission control system, meets two conditions:

1. It is designed, built, and equipped so it conforms at the time of sale to the ultimate purchaser with the requirements of 40 CFR 1045 and 40 CFR 1060.
2. It is free from defects in materials and workmanship that may keep it from meeting the requirements of 40 CFR 1045 and 40 CFR 1060.

Where a warrantable condition exists, BRP will repair or replace, as it elects, any part or component with a defect in materials or workmanship that would increase the engine’s emissions of any regulated pollutant within the stated warranty period at no cost to the owner, including expenses related to diagnosing and repairing or replacing emission-related parts. All defective parts replaced under this warranty become the property of BRP.

For all emission-related warranty claims, BRP is limiting the diagnosis and repair of emission-related parts to the authorized Sea-Doo dealers, unless for emergency repairs as required by item 2 of the following list.

As a certifying manufacturer, BRP will not deny emission-related warranty claims based on any of the following:

1. Maintenance or other service BRP or BRP's authorized facilities performed.
2. Engine/equipment repair work that an operator performed to correct an unsafe, emergency condition attributable to BRP as long as the operator tries to restore the engine/equipment to its proper configuration as soon as possible.
3. Any action or inaction by the operator unrelated to the warranty claim.
4. Maintenance that was performed more frequently than BRP specify.
5. Anything that is BRP fault or responsibility.
6. The use of any fuel that is commonly available where the equipment operates unless BRP written maintenance instructions state that this fuel would harm the equipment’s emission control system and operators can readily find the proper fuel. See maintenance information section and fuel requirements of fueling section.

Emission-Related Warranty Period

The emission-related warranty is valid for the following period whichever comes first:

	HOURS	MONTHS
Exhaust emission-related components	175	30
Evaporative emission-related components	N/A	24

Components Covered

The emission-related warranty covers all components whose failure would increase an engine's emissions of any regulated pollutant, including the following listed components:

1. For exhaust emissions, emission-related components include any engine parts related to the following systems:
   - Air-induction system
   - Fuel system
   - Ignition system
   - Exhaust gas recirculation systems
2. The following parts are also considered emission-related components for exhaust emissions:
   - Aftertreatment devices
   - Crankcase ventilation valves
   - Sensors
   - Electronic control units
3. The following parts are considered emission-related components for evaporative emissions:
   - Fuel tank
   - Fuel cap
   - Fuel line
   - Fuel line fittings
   - Clamps*
   - Pressure relief valves*
   - Control valves*
   - Control solenoids*
   - Electronic controls*
   - Vacuum control diaphragms*
   - Control cables*
   - Control linkages*
   - Purge valves
   - Vapor hoses
   - Liquid/vapor separator
   - Carbon canister
   - Canister mounting brackets
   - Carburetor purge port connector
4. Emission-related components also include any other part whose only purpose is to reduce emissions or whose failure will increase emissions without significantly degrading engine/equipment performance.

*As related to the evaporative emission control system

Limited Applicability

As a certifying manufacturer, BRP may deny emission-related warranty claims for failures that have been caused by the owner's or operator's improper maintenance or use, by accidents for which the manufacturer has no responsibility, or by acts of God. For example, an emission-related warranty claim need not be honored for failures that have been directly caused by the operator's abuse of the engine/equipment or the operator's use of the engine/equipment in a manner for which it was not designed and are not attributable to the manufacturer in any way.

* In the USA, products are distributed and serviced by BRP US Inc.

CALIFORNIA AND NEW YORK EMISSION CONTROL WARRANTY STATEMENT FOR MODEL YEAR 2016 SEA-DOO® PERSONAL WATERCRAFT

For California and New York, your 2016 Sea-Doo personal watercraft has a special environmental label required by the California Air Resources Board. The label has 1, 2, 3 or 4 stars. A hangtag, provided with your personal watercraft, describes the meaning of the star rating system.

The Star Label Means Cleaner Marine Engines

The Symbol for Cleaner Marine Engines:

F18L3CQ

Cleaner Air and Water

For a healthier lifestyle and environment.

Better Fuel Economy

Burns up to 30 - 40 percent less gas and oil than conventional carbureted two-stroke engines saving money and resources.

Longer Emission Warranty

Protects consumer for worry free operation.

One Star – Low Emission

The one-star label identifies personal watercraft, outboard, stern drive and inboard engines that meet the Air Resources Board's Personal Watercraft and Outboard marine engine 2001 exhaust emission standards. Engines meeting these standards have 75% lower emissions than conventional carbureted two-stroke engines. These engines are equivalent to the U.S. EPA's 2006 standards for marine engines.

Two Stars – Very Low Emission

The two-star label identifies personal watercraft, outboard, stern drive and inboard engines that meet the Air Resources Board's Personal Watercraft and Outboard marine engine 2004 exhaust emission standards. Engines meeting these standards have 20% lower emissions than One Star - Low-Emission engines.

Three Stars – Ultra Low Emission

The three-star label identifies engines that meet the Air Resources Board's Personal Watercraft and Outboard marine engine 2008 exhaust emission standards or the Stern drive and Inboard marine engine 2003 exhaust emission standards. Engines meeting these standards have 65% lower emissions than One Star – Low Emission engines.

Four Stars – Super Ultra Low Emission

The four-star label identifies engines that meet the Air Resources Board's Stern-drive and Inboard marine engine 2012 exhaust emission standards. Personal Watercraft and Outboard marine engines may also comply with these standards. Engines meeting these standards have 90% lower emissions than One Star – Low Emission engines.

For more information: Cleaner Watercraft – Get the Facts
1 800 END-SMOG
www.arb.ca.gov

Your Emission Control Warranty Rights and Obligations

The California Air Resources Board, the New York State Department of Environmental Conservation and Bombardier Recreational Products Inc. ("BRP") are pleased to explain the emission control system warranty on your Model Year 2016 Sea-Doo personal watercraft. In California, new personal watercraft engines must be designed, built and equipped to meet the State's stringent anti-smog standards. BRP must warrant the emission control system on your personal watercraft engine for the period of time listed below provided there has been no abuse, neglect or improper maintenance of your personal watercraft engine.

Your emission control system may include parts such as the fuel injection system, the ignition system and catalytic converter. Also included may be hoses, belts, connectors and other emission related assemblies.

Where a warrantable condition exists, BRP will repair your personal watercraft engine at no cost to you including diagnosis, parts and labor provided that such work is performed by an authorized BRP dealer.

Manufacturer's Limited Warranty Coverage

This emission limited warranty covers Model Year 2016 Sea-Doo personal watercrafts certified and produced by BRP for sale in California or New York, that are originally sold in California or New York to a California or New York resident or subsequently warranty registered to a California or New York resident. The BRP limited warranty conditions for Sea-Doo personal watercrafts are still applicable to these models with the necessary modifications. Select emission control parts of your 2016 Sea-Doo personal watercrafts are warranted from the date of delivery to the first retail consumer for a period of 4 years, or for 250 hours of use, whichever occurs first. However, warranty coverage based on the hourly period is only permitted for personal watercraft equipped with the appropriate hour meters or their equivalent. If any emission-related part on your engine is defective under warranty, the part will be repaired or replaced by BRP.

Parts covered for a Model Year 2016 Sea-Doo® personal watercraft:

Idle bypass valve	Air intake adapter
Throttle position sensor	Spark plugs
Intake manifold air pressure sensor	Ignition coils
Intake manifold air temperature sensor	Air box
Engine temperature sensor	Intake and exhaust valve and seals
Knock sensor	Intake manifold
Engine control module ECM	Crankcase ventilation valve
Throttle body	Throttle body seal
Fuel rail	Intake manifold seal
Fuel injectors	Wire harness and connectors
Fuel pressure regulator	Fuel filter
Fuel pump	Supercharger

The emission warranty covers damage to other engine components that is caused by the failure of a warranted part. The BRP Operator's Guide provided contains written instructions for the proper maintenance and use of your personal watercraft. All emission warranty parts are warranted by BRP for the entire warranty period of the personal watercraft, unless the part is scheduled for replacement as required maintenance in the Operator's Guide.

Emission warranty parts that are scheduled for replacement, as required maintenance, are warranted by BRP for the period of time before the first scheduled replacement date for that part. Emission warranty parts that are scheduled for regular inspection, but not regular replacement, are warranted by BRP for the entire warranty period of the personal watercraft. Any emission warranty part repaired or replaced under the terms of this warranty statement is warranted by BRP for the remainder of the warranty period of the original part. All parts replaced under this limited warranty become the property of BRP.

Maintenance receipts and records should be transferred to each subsequent owner of the personal watercraft.

Owner's Warranty Responsibilities

As the owner of a 2016 Sea-Doo personal watercraft, you are responsible for the performance of the required maintenance listed in your Operator's Guide. BRP recommends that you retain all receipts covering maintenance of your personal watercraft engine, but BRP cannot deny warranty solely for the lack of receipts or your failure to ensure the performance of all scheduled maintenance.

As the owner of a Sea-Doo® personal watercraft, you should however be aware that BRP may deny you warranty coverage if your engine(s) or a part has failed due to abuse, neglect, improper maintenance or unapproved modifications.

You are responsible for presenting your engine to an authorized BRP Dealer as soon as a problem exists. The warranty repairs will be completed in a reasonable amount of time, not to exceed 30 days.

If you have any questions regarding your warranty rights and responsibilities or for the name and location of the nearest authorized BRP Dealer you should contact the Customer Assistance Center at 1 715 848-4957.

© 2015 Bombardier Recreational Products Inc. All rights reserved.
® Registered trademark of Bombardier Recreational Products Inc. or its subsidiaries.

BRP INTERNATIONAL LIMITED WARRANTY: 2016 SEA-DOO® PERSONAL WATERCRAFT

1. SCOPE OF THE LIMITED WARRANTY

Bombardier Recreational Products Inc. (“BRP”)* warrants its 2016 SEA-DOO PERSONAL WATERCRAFTS ("personal watercraft") sold by distributors or dealers authorized by BRP to distribute Sea-Doo Personal watercrafts ("Sea-Doo Distributor/Dealer") outside of the fifty United States, Canada, member states of the European Economic Area (which is comprised of the member states of the European Union plus Norway, Iceland and Liechtenstein) ("EEA"), member states of the Commonwealth of the Independent States (including Ukraine and Turkmenistan) ("CIS") and Turkey, from defects in material or workmanship for the period and under the conditions described below.

All genuine BRP personal watercraft parts and accessories, installed by an authorized Sea-Doo Distributor/Dealer at the time of delivery of the 2016 Sea-Doo personal watercraft, carry the same warranty as that of the personal watercraft.

This limited warranty will become null and void if: (1) the personal watercraft was used for racing or any other competitive activity, at any point, even by a previous owner; or (2) the personal watercraft has been altered or modified in such a way so as to adversely affect its operation, performance or durability or (3) the personal watercraft has been altered or modified to change its intended use.

2. LIMITATIONS OF LIABILITY

TO THE EXTENT PERMITTED BY LAW, THIS WARRANTY IS EXPRESSLY GIVEN AND ACCEPTED IN LIEU OF ANY AND ALL OTHER WARRANTIES, EXPRESSED OR IMPLIED, INCLUDING WITHOUT LIMITATION ANY WARRANTY OF MERCHANTABILITY OR FITNESS FOR A PARTICULAR PURPOSE. TO THE EXTENT THAT THEY CANNOT BE DISCLAIMED, THE IMPLIED WARRANTIES ARE LIMITED IN DURATION TO THE LIFE OF THE EXPRESS WARRANTY. INCIDENTAL AND CONSEQUENTIAL DAMAGES ARE EXCLUDED FROM COVERAGE UNDER THIS WARRANTY. SOME JURISDICTIONS DO NOT ALLOW FOR THE DISCLAIMERS, LIMITATIONS AND EXCLUSIONS IDENTIFIED ABOVE, AS A RESULT, THEY MAY NOT APPLY TO YOU. THIS WARRANTY GIVES YOU SPECIFIC RIGHTS AND YOU MAY ALSO HAVE OTHER LEGAL RIGHTS WHICH MAY VARY FROM COUNTRY TO COUNTRY. (FOR PRODUCTS PURCHASED IN AUSTRALIA SEE CLAUSE 4 BELOW).

Neither the Sea-Doo Distributor/Dealer nor any other person has been authorized to make any affirmation, representation or warranty regarding the product, other than those contained in this limited warranty, and if made, shall not be enforceable against BRP.

BRP reserves the right to modify this warranty at any time, being understood that such modification will not alter the warranty conditions applicable to the products sold while this warranty is in effect.

3. EXCLUSIONS – ARE NOT WARRANTED

The following are not warranted under this limited warranty under any circumstances:

– Replacement of parts due to normal wear and tear;

– Routine maintenance parts and services, including but not limited to tune ups, adjustments, oil, lubricant and coolant changes, spark plug replacement, water pumps and the like;
– Damage caused by negligence or failure to provide proper maintenance and/or storage, as described in the Operator's Guide;
– Damage resulting from removal of parts, improper repairs, service, maintenance, modification or use of parts or accessories not manufactured or approved by BRP which in its reasonable judgment are either incompatible with the product or adversely affect its operation, performance and durability, or resulting from repairs done by a person that is not an authorized servicing Sea-Doo Distributor/Dealer;
– Damage caused by abuse, misuse, abnormal use, neglect, racing, improper operation or operation of the product in a manner inconsistent with the recommended operation described in the Operator's Guide;
– Damage resulting from external damage, accident, submersion, fire, foreign object or water ingestion, theft, vandalism or any act of God;
– Operation with fuels, oils or lubricants which are not suitable for use with the product (see the Operator's Guide);
– Damage resulting from rust, corrosion or exposure to the elements;
– Damages from cooling system or jet pump blockage by foreign material;
– Damages to gel coat finish including but not limited to cosmetic gel coat finish defects, blisters, starring, crazing and fiberglass delamination caused by blisters, crazing, spider or hairline cracks; and
– Incidental or consequential damages, or damages of any kind including without limitation towing, storage, transportation expenses, telephone, rental, taxi, inconvenience, insurance coverage, loan payments, loss of time, loss of income or time missed for downtime experience due to service work.

4. WARRANTY COVERAGE PERIOD

This limited warranty will be in effect from (1) the date of delivery to the first retail consumer or (2) the date the product is first put into use, whichever occurs first and for a period of:

1. TWELVE (12) CONSECUTIVE MONTHS for private, recreational use,
2. FOUR (4) CONSECUTIVE MONTHS for commercial use,
   This is a minimal warranty period which can be extended by any applicable warranty promotional program, as the case may be. A personal watercraft is used commercially when it is used in connection with generating income or any work or employment during any part of the warranty period. A personal watercraft is also used commercially when, at any point during the warranty period, it has commercial tags or is licensed for commercial use.

The repair or replacement of parts or the performance of service under this warranty does not extend the life of this warranty beyond its original expiration date.

Note that the duration and any other modalities of the warranty coverage are subject to the applicable national or local legislation in the customer's country.

FOR PRODUCTS SOLD IN AUSTRALIA ONLY

Nothing in these Warranty terms and conditions should be taken to exclude, restrict or modify the application of any condition, warranty, guarantee, right or remedy conferred or implied under the Competition and Consumer Act 2010 (Cth), including the Australian Consumer Law or any other law, where to do so would contravene that law, or cause any part of these terms and conditions to be void. The benefits given to you under this limited warranty are in addition to other rights and remedies that you have under Australian law.

Our goods come with guarantees that cannot be excluded under the Australian Consumer Law. You are entitled to a replacement or refund for a major failure and for compensation for any other reasonably foreseeable loss or damage. You are also entitled to have the goods repaired or replaced if the goods fail to be of acceptable quality and the failure does not amount to a major failure.

5. CONDITIONS TO HAVE WARRANTY COVERAGE

This warranty coverage is available **only** if **each** of the following conditions has been fulfilled:

- The 2016 Sea-Doo personal watercraft must be purchased as new and unused by its first owner from a Sea-Doo Distributor/Dealer authorized to distribute Sea-Doo personal watercrafts in the country in which the sale occurred;
- The BRP specified pre-delivery inspection process must be completed and documented;
- The 2016 Sea-Doo personal watercraft must have undergone proper registration by an authorized Sea-Doo Distributor/Dealer;
- The 2016 Sea-Doo personal watercraft must have been purchased in the country or union of countries in which the purchaser resides.
- Routine maintenance outlined in the Operator’s Guide must be timely performed in order to maintain warranty coverage. BRP reserves the right to make warranty coverage contingent upon proof of proper maintenance.

BRP will not honor this limited warranty to any private use owner or commercial use owner if one of the preceding conditions has not been met. Such limitations are necessary in order to allow BRP to preserve both the safety of its products, and also that of its consumers and the general public.

6. WHAT TO DO TO OBTAIN WARRANTY COVERAGE UNDER THIS WARRANTY

The customer must cease using the Sea-Doo personal watercraft upon the appearance of an anomaly. The customer must notify a servicing Sea-Doo Distributor/Dealer within two (2) days of the appearance of a defect, and provide it with reasonable access to the product and reasonable opportunity to repair it. The customer must also present to the authorized Sea-Doo Distributor/Dealer, proof of purchase of the product and must sign the repair/work order prior to starting the repair in order to validate the warranty repair. All parts replaced under this limited warranty become the property of BRP.

Note that the notification period is subject to the applicable national or local legislation in customer's country.

7. WHAT BRP WILL DO

To the extent permitted by law, BRP's obligations under this warranty are limited to, at its sole discretion, repairing parts found defective under normal use, maintenance and service, or replacing such parts with new genuine BRP parts without charge for parts and labor, at any authorized Sea-Doo Distributor/Dealer during the warranty coverage period under the conditions described herein. BRP's responsibility is limited to making the required repairs or replacements of parts. No claim of breach of warranty shall be cause for cancellation or rescission of the sale of the Sea-Doo personal watercraft to the owner. You may have other legal rights which may vary from country to country.

In the event that service is required outside of the country of original sale, the owner will bear responsibility for any additional charges due to local practices and conditions, such as, but not limited to, freight, insurance, taxes, license fees, import duties, and any and all other financial charges, including those levied by governments, states, territories and their respective agencies.

BRP reserves the right to improve or modify products from time to time without assuming any obligation to modify products previously manufactured.

8. TRANSFER

If the ownership of a product is transferred during the warranty coverage period, this limited warranty, subject to its terms and conditions, shall also be transferred and be valid for the remaining coverage period provided BRP or an authorized Sea-Doo Distributor/Dealer receives a proof that the former owner agreed to the transfer of ownership, in addition to the coordinates of the new owner.

9. CONSUMER ASSISTANCE

1. In the event of a controversy or a dispute in connection with this limited warranty, BRP suggests that you try to resolve the issue at the Sea-Doo Distributor/Dealer level. We recommend discussing the issue with the authorized Sea-Doo Distributor/Dealer's service manager or owner.
2. If further assistance is required, the Sea-Doo Distributor/Dealer service department should be contacted in order to resolve the matter.
3. If the matter still remains unresolved then contact BRP by writing at the address listed below.

For countries within Middle East and Africa, please contact our European office:

BRP EUROPE N.V.

Consumer Assistance Center
Skaldenstraat 125
9042 Gent
Belgium
Tel.: +32 9 218 26 00

For all other countries, please contact your local Sea-Doo Distributor/Dealer (visit our website at www.brp.com for contact information), or contact our North American office at:

BOMBARDIER RECREATIONAL PRODUCTS INC.

Consumer Assistance Center
75 J.-A. Bombardier Street
Sherbrooke QC J1L 1W3
Tel.: +1 819 566-3366

* For the territory covered by this limited warranty, products are distributed and serviced by Bombardier Recreational Products Inc. or its affiliates.

© 2015 Bombardier Recreational Products Inc. All rights reserved.
® Registered trademark of Bombardier Recreational Products Inc.

BRP LIMITED WARRANTY FOR THE EUROPEAN ECONOMIC AREA, THE COMMONWEALTH OF THE INDEPENDENT STATES, TURKEY: 2016 SEA-DOO® PERSONAL WATERCRAFT

1. SCOPE OF THE LIMITED WARRANTY

Bombardier Recreational Products Inc. (“BRP”)* warrants its 2016 SEA-DOO PERSONAL WATERCRAFT ("personal watercraft") sold by distributors or dealers authorized by BRP to distribute Sea-Doo personal watercrafts ("Sea-Doo Distributor/Dealer") in member states of the European Economic Area (which is comprised of the member states of the European Union plus Norway, Iceland and Liechtenstein) ("EEA"), in member states of the Commonwealth of the Independent States (including Ukraine and Turkmenistan) ("CIS") and Turkey from defects in material or workmanship for the period and under the conditions described below.

All genuine BRP personal watercraft parts and accessories, installed by an authorized Sea-Doo Distributors/Dealers at the time of delivery of the 2016 Sea-Doo personal watercraft carry the same warranty as that of the personal watercraft.

This limited warranty will become null and void if: (1) the personal watercraft was used for racing or any other competitive activity, at any point, even by a previous owner; or (2) the personal watercraft has been altered or modified in such a way so as to adversely affect its operation, performance or durability, or (3) the personal watercraft has been altered or modified to change its intended use.

2. LIMITATIONS OF LIABILITY

TO THE EXTENT PERMITTED BY LAW, THIS WARRANTY IS EXPRESSLY GIVEN AND ACCEPTED IN LIEU OF ANY AND ALL OTHER WARRANTIES, EXPRESSED OR IMPLIED, INCLUDING WITHOUT LIMITATION ANY WARRANTY OF MERCHANTABILITY OR FITNESS FOR A PARTICULAR PURPOSE. TO THE EXTENT THAT THEY CANNOT BE DISCLAIMED, THE IMPLIED WARRANTIES ARE LIMITED IN DURATION TO THE LIFE OF THE EXPRESS WARRANTY. INCIDENTAL AND CONSEQUENTIAL DAMAGES ARE EXCLUDED FROM COVERAGE UNDER THIS WARRANTY. SOME JURISDICTIONS DO NOT ALLOW FOR THE DISCLAIMERS, LIMITATIONS AND EXCLUSIONS IDENTIFIED ABOVE, AS A RESULT, THEY MAY NOT APPLY TO YOU. THIS WARRANTY GIVES YOU SPECIFIC RIGHTS, AND YOU MAY ALSO HAVE OTHER LEGAL RIGHTS WHICH MAY VARY FROM COUNTRY TO COUNTRY.

Neither the Sea-Doo Distributor/Dealer nor any other person has been authorized to make any affirmation, representation or warranty regarding the product, other than those contained in this limited warranty, and if made, shall not be enforceable against BRP.

BRP reserves the right to modify this warranty at any time, being understood that such modification will not alter the warranty conditions applicable to the products sold while this warranty is in effect.

3. EXCLUSIONS – ARE NOT WARRANTED

The following are not warranted under this limited warranty under any circumstances:

– Replacement of parts due to normal wear and tear;

- Routine maintenance parts and services, including but not limited to tune ups, adjustments, oil, lubricant and coolant changes, spark plug replacement, water pumps and the like;
- Damage caused by negligence or failure to provide proper maintenance and/or storage, as described in the Operator's Guide;
- Damage resulting from removal of parts, improper repairs, service, maintenance, modification or use of parts or accessories not manufactured or approved by BRP which in its reasonable judgement are either incompatible with the product or adversely affect its operation, performance and durability, or resulting from repairs done by a person that is not an authorized servicing Sea-Doo Distributor/Dealer;
- Damage caused by abuse, misuse, abnormal use, neglect, racing, improper operation or operation of the product in a manner inconsistent with the recommended operation described in the Operator's Guide;
- Damage resulting from external damage, accident, submersion, fire, foreign object or water ingestion, theft, vandalism or any act of God;
- Operation with fuel, oils or lubricants which are not suitable for use with the product (see the Operator's Guide);
- Damage resulting from rust, corrosion or exposure to the elements;
- Damages from cooling system or jet pump blockage by foreign material;
- Damages to gel coat finish including but not limited to cosmetic gel coat finish defects, blisters, starring, crazing and fiberglass delamination caused by blisters, crazing, spider or hairline cracks; and
- Incidental or consequential damages, or damages of any kind including without limitation towing, storage, transportation expenses, telephone, rental, taxi, inconvenience, insurance coverage, loan payments, loss of time, loss of income; or time missed for downtime experience due to service work.

4. WARRANTY COVERAGE PERIOD

This limited warranty will be in effect from (1) the date of delivery to the first retail consumer or (2) the date the product is first put into use, whichever occurs first and for a period of:

1. Twenty four (24) CONSECUTIVE MONTHS, for private, recreational use,
2. FOUR (4) CONSECUTIVE MONTHS for commercial use,
   A personal watercraft is used commercially when it is used in connection with generating income or any work or employment during any part of the warranty period. A personal watercraft is also used commercially when, at any point during the warranty period, it has commercial tags or is licensed for commercial use.

The repair or replacement of parts or the performance of service under this warranty does not extend the life of this warranty beyond its original expiration date.

Note that the duration and any other modalities of the warranty coverage are subject to the applicable national or local legislation in the customer's country.

5. CONDITIONS TO HAVE WARRANTY COVERAGE

This warranty coverage is available **only** if **each** of the following conditions has been fulfilled:

- The 2016 Sea-Doo personal watercraft must be purchased as new and unused by its first owner from a Sea-Doo Distributor/Dealer authorized to distribute Sea-Doo personal watercrafts in the country in which the sale occurred;
- The BRP specified pre-delivery inspection process must be completed and documented;
- The 2016 Sea-Doo personal watercraft must have undergone proper registration by an authorized Sea-Doo Distributor/Dealer;
- The 2016 Sea-Doo personal watercraft must be purchased within the EEA by an EEA resident, in the CIS for residents of the countries comprised in such area and in Turkey for residents of Turkey; and
- Routine maintenance outlined in the Operator's Guide must be timely performed in order to maintain warranty coverage. BRP reserves the right to make warranty coverage contingent upon proof of proper maintenance.

BRP will not honor this limited warranty to any private use owner or commercial use owner if one of the preceding conditions has not been met. Such limitations are necessary in order to allow BRP to preserve both the safety of its products, and also that of its consumers and the general public.

6. WHAT TO DO TO OBTAIN WARRANTY COVERAGE UNDER THIS WARRANTY

The customer must cease using the Sea-Doo personal watercraft upon the appearance of an anomaly. The customer must notify a servicing Sea-Doo Distributor/Dealer within two (2) months of the appearance of a defect, and provide it with reasonable access to the product and reasonable opportunity to repair it. The customer must also present to the authorized Sea-Doo Distributor/Dealer, proof of purchase of the product and must sign the repair/work order prior to starting the repair in order to validate the warranty repair. All parts replaced under this limited warranty become the property of BRP.

Note that the notification period is subject to the applicable national or local legislation in customer's country.

7. WHAT BRP WILL DO

To the extent permitted by law, BRP's obligations under this warranty are limited to, at its sole discretion, repairing parts found defective under normal use, maintenance and service, or replacing such parts with new genuine Sea-Doo parts without charge for parts and labor, at any authorized Sea-Doo Distributor/Dealer during the warranty coverage period under the conditions described herein. BRP's responsibility is limited to making the required repairs or replacements of parts. No claim of breach of warranty shall be cause for cancellation or rescission of the sale of the Sea-Doo personal watercraft to the owner. You may have other legal rights which may vary from country to country.

In the event that service is required outside of the country of original sale, or for EEA residents, if service is required outside of the EEA, for CIS residents, if service is required outside of the CIS, the owner will bear responsibility for any additional charges due to local practices and conditions, such as, but not limited

to, freight, insurance, taxes, license fees, import duties, and any and all other financial charges, including those levied by governments, states, territories and their respective agencies.

BRP reserves the right to improve or modify products from time to time without assuming any obligation to modify products previously manufactured.

8. TRANSFER

If the ownership of a product is transferred during the warranty coverage period, this warranty shall also be transferred and be valid for the remaining coverage period provided BRP or an authorized Sea-Doo Distributor/Dealer receives a proof that the former owner agreed to the transfer of ownership, in addition to the coordinates of the new owner.

9. CONSUMER ASSISTANCE

1. In the event of a controversy or a dispute in connection with this limited warranty, BRP suggests that you try to resolve the issue at the Sea-Doo Distributor/Dealer level. We recommend discussing the issue with the authorized Sea-Doo Distributor/Dealer's service manager or owner.
2. If further assistance is required, the Sea-Doo Distributor/Dealer service department should be contacted in order to resolve the matter.
3. If the matter still remains unresolved then contact BRP at the address listed below.

For countries within EEA, CIS or Turkey, except Scandinavian countries please contact our European office:

BRP EUROPE N.V.

Consumer Assistance Center
Skaldenstraat 125
9042 Gent
Belgium
Tel.: +32 9 218 26 00

For Scandinavian countries, please contact our Finland office:

BRP FINLAND OY

Service Department
Isoaavantie 7
FIN-96320 Rovaniemi
Finland
Tel.: +358 163 208 111

You can find your Sea-Doo Distributor/Dealer's coordinates on **www.brp.com**.

* In the EEA, products are distributed and serviced by BRP European Distribution S.A. and other affiliates or subsidiaries of BRP.

© 2015 Bombardier Recreational Products Inc. All rights reserved.
® Registered trademarks of Bombardier Recreational Products Inc.

ADDITIONAL TERMS AND CONDITIONS FOR FRANCE ONLY

The following terms and conditions are applicable to products sold in France only:

The seller shall deliver goods that are complying with the contract and shall be responsible for defects existing upon delivery. The seller shall also be responsible for defects resulting from packaging, assembling instructions or the installation when it is its responsibility per the contract or if accomplished under its responsibility. To be compliant with the contract, the good shall:

1. Be fit for normal use for goods similar thereto and, if applicable:
   - Correspond to the description provided by the seller and have the qualities presented to the buyer though sample or model;
   - Have the qualities that a buyer may legitimately expect considering the public declarations of the seller, the manufacturer of its representative, including in advertising or labeling; or
2. Have the characteristics mutually agreed upon as between the parties or be fit for the specific use intended by the buyer and brought to the attention of the seller and which accepted.

The action for failure to comply is prescribed after two years after delivery of the goods. The seller is responsible for the warranty for hidden defects of the good sold if such hidden defects are rendering the good unfit for the intended use, or if they diminish its use in such a way that the buyer would not have acquired the good or would have given a lesser price, had he known. The action for such hidden defects shall be taken by the buyer within 2 years of the discovery of the defect.

CUSTOMER INFORMATION

PRIVACY INFORMATION

BRP wishes to inform you that your coordinates will be used for safety and warranty related purposes. Furthermore, BRP and its affiliates may use its customer list to distribute marketing and promotional information about BRP and related products.

To exercise your right to consult or correct your data, or to be removed from the addressee-list for direct marketing, please contact BRP.

By E-mail: privacyofficer@brp.com

By mail: BRP
Senior Legal Counsel-Privacy Officer
726 St-Joseph
Valcourt QC
Canada
J0E 2L0

CHANGE OF ADDRESS/OWNERSHIP

If your address has changed or if you are the new owner of the boat, be sure to notify BRP by either:

– Mailing one of the following card below;
– North America Only: calling at 1-888-272-9222;
– Contacting an authorized BRP distributor/dealer.

In case of change of ownership, please join a proof that the former owner agreed to the transfer.

Notifying BRP, even after the expiration of the limited warranty, is very important as it enables BRP to reach the boat owner if necessary, like when safety recalls are initiated. It is the owner's responsibility to notify BRP.

STOLEN UNITS: In the event that your boat is stolen, you should notify your area's distributor warranty department of such. We will ask you to provide your name, address, phone number, Hull Identification Number and date it was stolen.

North America

BOMBARDIER RECREATIONAL PRODUCTS INC.
Warranty Department
75 J.-A. Bombardier Street
Sherbrooke, QC J1L 1W3
Canada

Scandinavian countries

BRP FINLAND OY
Service Department
Isoaavantie 7
FIN-96320 Rovaniemi
Finland

Other countries in the world

BRP EUROPEAN DISTRIBUTION
Avenue d'Ouchy 4-6
1006 Lausanne
Switzerland

This page is intentionally blank

CHANGE OF ADDRESS ☐ CHANGE OF OWNERSHIP ☐

VEHICLE IDENTIFICATION NUMBER

Model Number Vehicle Identification Number (V.I.N.)

OLD ADDRESS OR PREVIOUS OWNER:

NAME

NO. STREET APT

CITY STATE/PROVINCE ZIP/POSTAL CODE

COUNTRY TELEPHONE

NEW ADDRESS OR NEW OWNER:

NAME

NO. STREET APT

CITY STATE/PROVINCE ZIP/POSTAL CODE

COUNTRY TELEPHONE

V00A2F

E-MAIL ADDRESS

CHANGE OF ADDRESS ☐ CHANGE OF OWNERSHIP ☐

VEHICLE IDENTIFICATION NUMBER

Model Number Vehicle Identification Number (V.I.N.)

OLD ADDRESS OR PREVIOUS OWNER:

NAME

NO. STREET APT

CITY STATE/PROVINCE ZIP/POSTAL CODE

COUNTRY TELEPHONE

NEW ADDRESS OR NEW OWNER:

NAME

NO. STREET APT

CITY STATE/PROVINCE ZIP/POSTAL CODE

COUNTRY TELEPHONE

V00A2F

E-MAIL ADDRESS

This page is intentionally blank

CHANGE OF ADDRESS ☐ CHANGE OF OWNERSHIP ☐

VEHICLE IDENTIFICATION NUMBER

Model Number Vehicle Identification Number (V.I.N.)

OLD ADDRESS OR PREVIOUS OWNER:

NAME

NO. STREET APT

CITY STATE/PROVINCE ZIP/POSTAL CODE

COUNTRY TELEPHONE

NEW ADDRESS OR NEW OWNER:

NAME

NO. STREET APT

CITY STATE/PROVINCE ZIP/POSTAL CODE

COUNTRY TELEPHONE

V00A2F

E-MAIL ADDRESS

CHANGE OF ADDRESS ☐ CHANGE OF OWNERSHIP ☐

VEHICLE IDENTIFICATION NUMBER

Model Number Vehicle Identification Number (V.I.N.)

OLD ADDRESS OR PREVIOUS OWNER:

NAME

NO. STREET APT

CITY STATE/PROVINCE ZIP/POSTAL CODE

COUNTRY TELEPHONE

NEW ADDRESS OR NEW OWNER:

NAME

NO. STREET APT

CITY STATE/PROVINCE ZIP/POSTAL CODE

COUNTRY TELEPHONE

V00A2F

E-MAIL ADDRESS

This page is intentionally blank

NOTE

NOTE

WATERCRAFT MODEL No. _____

HULL
IDENTIFICATION NUMBER (H.I.N.) _____

ENGINE
IDENTIFICATION NUMBER (E.I.N.) _____

Owner: _____
NAME

_____
No. STREET APT

_____
CITY STATE/PROVINCE ZIP/POSTAL CODE

Purchase Date _____ | _____ | _____ | _____ | _____
YEAR MONTH DAY

Warranty Expiry Date _____ | _____ | _____ | _____ | _____
YEAR MONTH DAY

To be completed by the authorized Sea-Doo dealer at the time of the sale.

DEALER IMPRINT AREA

F00A30L

219 001 690
OPERATOR'S GUIDE, RXT/ GTX / WAKE PRO SERIES / ENGLISH
GUIDE DU CONDUCTEUR, SÉRIE RXT/ GTX / WAKE PRO / ANGLAIS

FAIT AU / MADE IN CANADA U/M:P.C

®™ AND THE BRP LOGO ARE TRADEMARKS OF BOMBARDIER RECREATIONAL PRODUCTS INC. OR ITS AFFILIATES.
©2015 BOMBARDIER RECREATIONAL PRODUCTS INC. ALL RIGHTS RESERVED. PRINTED IN CANADA.
† IS A TRADEMARK OF CASTROL LTD USED UNDER LICENSE.