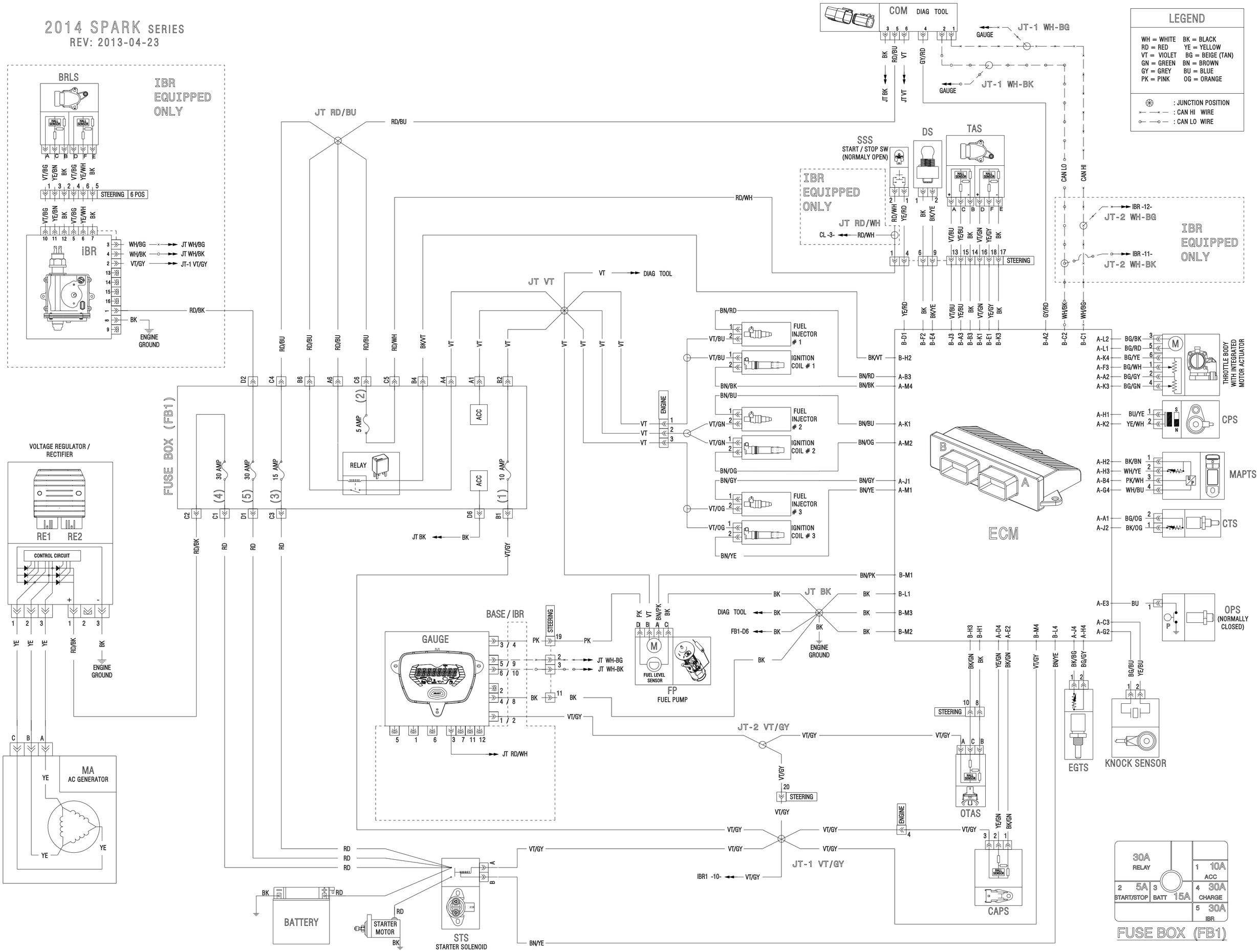2014 SPARK SERIES
REV: 2013-04-23