# 2023 Ski-Doo Expedition ACE Series

**If you're on a computer and don't see the clickable index on the left, please see the directions that were sent in the email with the download link, please check your junk mail if you don't see it.**

**If you're using a phone or tablet,**
**use the bookmark feature to help find what you need quickly**

**This manual is made up of the vehicle & engine manuals with all needed supplements organized into one easy to use manual.**

**If you bought this manual from any other seller, they are reselling our work. Please leave them negative feedback & email me at bestshopmanuals@gmail.com.**

**They will never be for sale or available on eBay, Amazon, Facebook or forums**

Our goal is to be one of the BEST sellers on the internet by providing you with the BEST customer service and the BEST manuals on the market.

Thank you for choosing us.






# 2023
# Vehicle Shop Manual

# (Everything except engine, see the engine section for engine information)

Expedition™ Series

ski-doo®

All page numbers below are clickable **TABLE OF CONTENTS**

EngineManua (Click Here)


**SAFETY NOTICE** ..... XV
IMPORTANT SAFETY PRECAUTIONS ..... XV

**INTRODUCTION** ..... XVII
VEHICLE INFORMATION ..... XVII
ENGINE EMISSIONS INFORMATION ..... XVIII
MANUAL INFORMATION ..... XIX
TIGHTENING TORQUE ..... XXII
FASTENER INFORMATION ..... XXIII

**01 MAINTENANCE**
**01 – PERIODIC MAINTENANCE SCHEDULE (EFI)** ..... 7
**02 – PERIODIC MAINTENANCE SCHEDULE (ACE)** ..... 9
**03 – PERIODIC MAINTENANCE SCHEDULE (E-TEC)** ..... 11
**04 – STORAGE PROCEDURE (EFI)** ..... 13
PROCEDURES ..... 13
ENGINE LUBRICATION ..... 13
**05 – STORAGE PROCEDURE (ACE)** ..... 15
GENERAL ..... 15
PROCEDURES ..... 15
FUEL SYSTEM ..... 15
ENGINE ..... 15
ELECTRICAL SYSTEM ..... 16
CHASSIS ..... 16
**06 – STORAGE PROCEDURE (E-TEC)** ..... 17
PROCEDURES ..... 17
ENGINE LUBRICATION ..... 17
**07 – PRESEASON PREPARATION** ..... 19

**02 ENGINE** Only covers the vehicle engine parts, see included engine manual for the rest
**01 – ENGINE REMOVAL AND INSTALLATION (EFI AND E-TEC)** ..... 21
GENERAL ..... 24
PROCEDURES ..... 24
ENGINE ..... 24
ENGINE SUPPORT ..... 31
ENGINE RUBBER MOUNTS ..... 32
**02 – ENGINE REMOVAL AND INSTALLATION (ACE AND ACE TURBO)** ..... 33
GENERAL ..... 34
PROCEDURES ..... 34
ENGINE ..... 34
ENGINE SUPPORTS ..... 37
ENGINE RUBBER MOUNTS ..... 38
**03 – AIR INTAKE SYSTEM (EFI AND E-TEC)** ..... 41
GENERAL ..... 42
PROCEDURES ..... 42
AIR FILTER (MESH) ..... 42
PRIMARY AIR INTAKE SILENCER ..... 43
SECONDARY AIR INTAKE SILENCER ..... 45
**04 – AIR INTAKE SYSTEM (ACE)** ..... 47
GENERAL ..... 49
PROCEDURES ..... 49
AIR FILTER (MESH) ..... 49
AIR INTAKE SILENCER ..... 50

# TABLE OF CONTENTS


**02 ENGINE** (cont'd)

**05 – EXHAUST SYSTEM (EFI AND E-TEC)** ..... 53
GENERAL ..... 55
MAINTENANCE ..... 55
INSPECTING THE EXHAUST SYSTEM ..... 55
PROCEDURES ..... 55
MUFFLER ..... 55
TUNED PIPE ..... 60
EXHAUST GAS TEMPERATURE SENSOR (EGTS) ..... 61

**06 – EXHAUST SYSTEM (600 ACE)** ..... 63
GENERAL ..... 64
MAINTENANCE ..... 64
INSPECTING THE EXHAUST SYSTEM COMPONENTS ..... 64
PROCEDURES ..... 64
MUFFLER ..... 64
EXHAUST PIPE ..... 65

**07 – EXHAUST SYSTEM (900 ACE AND 900 ACE TURBO)** ..... 71
GENERAL ..... 74
MAINTENANCE ..... 74
INSPECTING THE EXHAUST SYSTEM COMPONENTS ..... 74
REPLACING THE TURBO EXHAUST GASKET (APPLICABLE MODELS) ..... 74
PROCEDURES ..... 74
MUFFLER ..... 74
EXHAUST PIPE ..... 75

**08 – COOLING SYSTEM - VEHICLE COMPONENTS (EFI AND E-TEC)** ..... 81
GENERAL ..... 84
MAINTENANCE ..... 84
COOLING SYSTEM ..... 84
INSPECTION ..... 86
COOLING SYSTEM LEAK TEST ..... 86
PROCEDURES ..... 87
COOLANT TANK CAP ..... 87
COOLANT TANK ..... 87
FRONT RADIATOR ..... 87
RADIATOR COOLING FAN ..... 88

**09 – COOLING SYSTEM - VEHICLE COMPONENTS (ACE)** ..... 91
GENERAL ..... 94
MAINTENANCE ..... 94
VERIFYING THE ENGINE COOLANT LEVEL ..... 94
VERIFYING THE ENGINE COOLANT STRENGTH ..... 94
REPLACING THE COOLANT ..... 94
PROCEDURES ..... 96
COOLANT RESERVOIR CAP ..... 96
COOLANT RESERVOIR ..... 96
FRONT RADIATOR (IF EQUIPPED) ..... 97
COOLING FAN ..... 98

**10 – INTERCOOLER** ..... 99
GENERAL ..... 100
INSPECTION ..... 100
..... 100
PROCEDURES ..... 100
INTERCOOLER ACCESS ..... 100
REMOVING THE INTERCOOLER ..... 100
INSTALLING THE INTERCOOLER ..... 101

# TABLE OF CONTENTS


## 03 ELECTRONIC MANAGEMENT SYSTEM

**01 – ENGINE MANAGEMENT SYSTEM (EMS) - EFI** ..... 103
GENERAL ..... 104
SYSTEM DESCRIPTION ..... 104
SYSTEM FEATURES ..... 104
**02 – ENGINE MANAGEMENT SYSTEM (EMS) - ACE** ..... 105
GENERAL ..... 112
SYSTEM DESCRIPTION ..... 112
**03 – ENGINE MANAGEMENT SYSTEM (EMS) - E-TEC** ..... 113
GENERAL ..... 114
SYSTEM DESCRIPTION ..... 114
SYSTEM FEATURES ..... 115
**04 – CONTROLLER AREA NETWORK (CAN) - EFI AND E-TEC** ..... 117
GENERAL ..... 117
CONTROLLER AREA NETWORK (CAN) ..... 117
TROUBLESHOOTING ..... 117
CAN COMMUNICATION PROBLEMS ..... 117
**05 – CONTROLLER AREA NETWORK (CAN) - ACE** ..... 119
GENERAL ..... 119
CONTROLLER AREA NETWORK (CAN) ..... 119
TROUBLESHOOTING ..... 119
CAN COMMUNICATION PROBLEMS ..... 119
**06 – COMMUNICATION TOOLS** ..... 121
GENERAL ..... 121
REQUIRED TOOLS ..... 121
TROUBLESHOOTING ..... 122
COMMUNICATION PROBLEMS ..... 122
**07 – DIAGNOSTIC AND FAULT CODES (ALL EXCEPT 600 ACE)** ..... 125
GENERAL ..... 125
MONITORING SYSTEM ..... 125
DIAGNOSTIC FAULT CODES (DTC) ..... 126
**08 – DIAGNOSTIC AND FAULT CODES (600 ACE)** ..... 129
GENERAL ..... 129
MONITORING SYSTEM ..... 129
HOW TO FIND FAULT CODE DESCRIPTIONS ..... 130

## 04 FUEL SYSTEM

**01 – INTELLIGENT THROTTLE CONTROL (iTC) - ACE** ..... 131
GENERAL ..... 131
SYSTEM DESCRIPTION ..... 131
PROCEDURES ..... 132
THROTTLE ACCELERATOR SENSOR (TAS) ..... 132
ECO MODE SWITCH ..... 132
ADJUSTING THE THROTTLE CABLE (900 ACE TURBO R) ..... 134
**02 – FUEL TANK AND FUEL PUMP (EFI)** ..... 135
GENERAL ..... 138
SYSTEM DESCRIPTION ..... 138
MAINTENANCE ..... 141
INSPECTING THE FUEL LINES AND CONNECTIONS ..... 141
REPLACING THE IN-LINE FUEL FILTER ..... 141
INSPECTING AND CLEANING THE THROTTLE BODY ..... 141
INSPECTION ..... 141
TESTING FUEL SYSTEM FOR LEAKS ..... 141
TESTING FUEL TANK FOR LEAKS ..... 142
TESTING FUEL PRESSURE ..... 143

# TABLE OF CONTENTS


**04 FUEL SYSTEM** (cont'd)

**02 – FUEL TANK AND FUEL PUMP (EFI)** (cont'd)
PROCEDURES ... 144
FUEL HOSE AND OETIKER CLAMPS ... 144
FUEL TANK ... 145
FUEL PUMP ... 146
FUEL PUMP INLET FILTER ... 147
FUEL LEVEL SENSOR ... 150

**03 – FUEL TANK AND FUEL PUMP (ACE)** ... 151
GENERAL ... 154
SYSTEM DESCRIPTION ... 154
MAINTENANCE ... 157
INSPECTING THE FUEL LINES AND CONNECTIONS ... 157
REPLACING THE IN-LINE FUEL FILTER ... 157
INSPECTING AND CLEANING THE THROTTLE BODY ... 157
INSPECTION ... 157
TESTING FUEL SYSTEM FOR LEAKS ... 157
TESTING FUEL TANK FOR LEAKS ... 158
TESTING FUEL PRESSURE ... 159
PROCEDURES ... 160
FUEL HOSE AND OETIKER CLAMPS ... 160
FUEL TANK ... 161
FUEL PUMP ... 162
FUEL PUMP INLET FILTER ... 163
FUEL LEVEL SENSOR ... 165

**04 – FUEL TANK AND FUEL PUMP (E-TEC)** ... 167
GENERAL ... 170
SYSTEM DESCRIPTION ... 170
INSPECTION ... 173
INSPECTING THE FUEL LINES AND CONNECTIONS ... 173
TESTING FUEL SYSTEM FOR LEAKS ... 173
TESTING FUEL TANK FOR LEAKS ... 173
TESTING THE FUEL PRESSURE ... 174
PROCEDURES ... 175
FUEL HOSE AND OETIKER CLAMPS ... 175
REPLACING THE IN-LINE FUEL FILTER ... 176
FUEL TANK ... 177
FUEL PUMP ... 178
FUEL PUMP INLET FILTER ... 179
FUEL LEVEL SENSOR ... 182

**05 ELECTRICAL SYSTEM**

**01 – POWER DISTRIBUTION AND GROUNDS (EFI AND E-TEC)** ... 183
GENERAL ... 185
OVERVIEW ... 185
SYSTEM VOLTAGE (55 VDC) ... 185
SYSTEM VOLTAGE (12 VDC) ... 186
GROUNDS ... 186

**02 – POWER DISTRIBUTION AND GROUNDS (600 ACE)** ... 189
GENERAL ... 189
POWER DISTRIBUTION DIAGRAM ... 189
OVERVIEW ... 190
FUSES ... 190
GROUNDS ... 191

**05 ELECTRICAL SYSTEM** (cont'd)
**02 – POWER DISTRIBUTION AND GROUNDS (600 ACE)** (cont'd)
PROCEDURES ... 192
FUSE INSPECTION ... 192
RELAY CONTINUITY TEST ... 192
**03 – POWER DISTRIBUTION AND GROUNDS (900 ACE AND 900 ACE TURBO)** ... 193
GENERAL ... 193
OVERVIEW ... 193
FUSE HOLDER (FA) ... 193
FUSE BOX (FB1) ... 193
RELAY BOX (FB2) ... 193
GROUND LOCATIONS ... 193
**04 – WIRING HARNESS AND CONNECTORS (EFI)** ... 195
GENERAL ... 198
ACRONYMS ... 198
PROCEDURES ... 199
DIAGNOSTIC CONNECTOR (DEUTSCH) ... 199
ECM CONNECTOR (MOLEX) ... 200
MOLEX CONNECTORS (EXCEPT ECM) ... 202
DELPHI/PACKARD CONNECTORS ... 204
DELPHI CONNECTORS ... 204
BATTERY CABLES ... 205
SPLICES REPAIR PROCEDURE ... 206
**05 – WIRING HARNESS AND CONNECTORS (ACE)** ... 209
GENERAL ... 214
ACRONYMS ... 214
PROCEDURES ... 215
DIAGNOSTIC CONNECTOR (DEUTSCH) ... 215
ECM CONNECTOR (MOLEX) ... 216
MOLEX CONNECTORS (EXCEPT ECM) ... 219
DELPHI/PACKARD CONNECTORS ... 220
DELPHI CONNECTORS ... 220
BATTERY CABLES ... 221
SPLICES REPAIR PROCEDURE ... 222
**06 – WIRING HARNESS AND CONNECTORS (E-TEC)** ... 225
GENERAL ... 230
ACRONYMS ... 230
PROCEDURES ... 231
DIAGNOSTIC CONNECTOR (DEUTSCH) ... 231
ECM CONNECTOR (MOLEX) ... 232
MOLEX CONNECTORS (EXCEPT ECM) ... 235
DELPHI/PACKARD CONNECTORS ... 236
DELPHI CONNECTORS ... 236
BATTERY CABLES ... 237
SPLICES REPAIR PROCEDURE ... 238
**07 – IGNITION SYSTEM (EFI)** ... 241
GENERAL ... 241
SYSTEM DESCRIPTION ... 241
ADJUSTMENT ... 241
UNDERSTANDING THE TDC GAUGE ... 241
IGNITION TIMING ... 242
TROUBLESHOOTING ... 246
IGNITION SYSTEM TESTING SEQUENCE ... 246
PROCEDURES ... 246
SPARK PLUGS ... 246

# TABLE OF CONTENTS


**05 ELECTRICAL SYSTEM** (cont'd)

**07 – IGNITION SYSTEM (EFI)** (cont'd)

PROCEDURES (cont'd)

SPARK PLUG CABLES ..... 247
EMERGENCY ENGINE STOP SWITCH ..... 247
IGNITION COILS ..... 247

**08 – IGNITION SYSTEM (600 ACE)** ..... 249

GENERAL ..... 249
SYSTEM DESCRIPTION ..... 249
TROUBLESHOOTING ..... 249
IGNITION SYSTEM TESTING ..... 249
PROCEDURES ..... 250
IGNITION COILS ..... 250
SPARK PLUGS ..... 252
EMERGENCY ENGINE STOP SWITCH ..... 252
ENGINE CUT-OFF SWITCH ..... 252

**09 – IGNITION SYSTEM (900 ACE AND 900 ACE TURBO)** ..... 255

GENERAL ..... 255
SYSTEM DESCRIPTION ..... 255
TROUBLESHOOTING ..... 256
IGNITION SYSTEM TESTING ..... 256
DIAGNOSTIC GUIDELINES ..... 256
PROCEDURES ..... 257
D.E.S.S. POST ..... 257
START/STOP BUTTON ..... 257

**10 – IGNITION SYSTEM (E-TEC)** ..... 259

GENERAL ..... 259
SYSTEM DESCRIPTION ..... 259
ADJUSTMENT ..... 260
UNDERSTANDING THE TDC GAUGE ..... 260
IGNITION TIMING ..... 261
TROUBLESHOOTING ..... 265
IGNITION SYSTEM TESTING SEQUENCE ..... 265
PROCEDURES ..... 265
SPARK PLUGS ..... 265
SPARK PLUG CABLES ..... 267
EMERGENCY ENGINE STOP SWITCH ..... 268
IGNITION COILS ..... 268

**11 – CHARGING SYSTEM (EFI AND E-TEC)** ..... 271

GENERAL ..... 271
SYSTEM DESCRIPTION ..... 271
TROUBLESHOOTING ..... 271
TROUBLESHOOTING GUIDELINES ..... 271
PROCEDURES ..... 271
BATTERY ..... 272
VOLTAGE REGULATOR/RECTIFIER ..... 274
DC-DC CONVERTER ..... 275
CAPACITOR ..... 276

**12 – CHARGING SYSTEM (ACE)** ..... 281

GENERAL ..... 281
SYSTEM DESCRIPTION ..... 281
TROUBLESHOOTING ..... 282
PROCEDURES ..... 282
BATTERY LOAD TEST ..... 282
CHARGING SYSTEM LOAD TEST ..... 282

**05 ELECTRICAL SYSTEM** (cont'd)
**12 – CHARGING SYSTEM (ACE)** (cont'd)
PROCEDURES (cont'd)
VOLTAGE REGULATOR (REG) ..... 283
BATTERY ..... 284
**13 – STARTING SYSTEM (EFI AND E-TEC)** ..... 287
GENERAL ..... 287
STARTING SYSTEM BASICS (WITHOUT BATTERY) ..... 287
STARTING SYSTEM BASICS (WITH BATTERY) ..... 287
TROUBLESHOOTING ..... 288
DIAGNOSTIC TIPS ..... 288
DIAGNOSTIC GUIDELINES ..... 288
PROCEDURES ..... 289
START/RER SWITCH ..... 289
STARTER SOLENOID ..... 289
STARTER ..... 291
**14 – STARTING SYSTEM (ACE)** ..... 293
GENERAL ..... 293
BASIC STARTING SYSTEM OPERATION ..... 293
TROUBLESHOOTING ..... 293
DIAGNOSTIC TIPS ..... 293
DIAGNOSTIC GUIDELINES ..... 294
PROCEDURES ..... 294
START/RER SWITCH ..... 294
STARTER SOLENOID ..... 295
STARTER ..... 297
**15 – RF DIGITALLY ENCODED SECURITY SYSTEM (RF D.E.S.S.) - ACE** ..... 299
GENERAL ..... 299
SYSTEM DESCRIPTION ..... 299
PROCEDURES ..... 300
D.E.S.S. KEY ..... 300
D.E.S.S. / ENGINE CUT-OFF OPERATION ..... 300
BEEPER ..... 300
**16 – RF DIGITALLY ENCODED SECURITY SYSTEM (RF D.E.S.S.) - E-TEC** ..... 301
GENERAL ..... 301
SYSTEM DESCRIPTION ..... 301
PROCEDURES ..... 302
D.E.S.S. KEY ..... 302
D.E.S.S. / ENGINE CUT-OFF OPERATION ..... 302
BEEPER ..... 302
**17 – ROTAX ELECTRONIC REVERSE (RER)** ..... 303
GENERAL ..... 303
TROUBLESHOOTING ..... 303
DIAGNOSTIC TIPS ..... 303
PROCEDURES ..... 304
RER SWITCH ..... 304
BEEPER (REVERSE ALARM) ..... 305
**18 – LIGHTS (ALL EXCEPT 600 ACE)** ..... 307
GENERAL ..... 307
SYSTEM TESTING ..... 307
PROCEDURES ..... 307
HEADLIGHTS ..... 307
TAILLIGHT / BRAKE LIGHT ..... 309

# TABLE OF CONTENTS


**05 ELECTRICAL SYSTEM** (cont'd)

**19 – LIGHTS (600 ACE)** ..... 311
GENERAL ..... 311
SYSTEM TESTING ..... 311
TROUBLESHOOTING ..... 311
LIGHTING SYSTEM TESTING ..... 311
PROCEDURES ..... 311
HEADLIGHTS ..... 311
TAILLIGHT ..... 314

**20 – GAUGE 4.5" DIGITAL DISPLAY** ..... 315
GENERAL ..... 315
INDICATOR LAMPS DESCRIPTION ..... 315
TROUBLESHOOTING ..... 316
DIAGNOSTIC TIPS ..... 316
MULTIFUNCTION GAUGE TROUBLESHOOTING ..... 316
PROCEDURES ..... 317
MULTIFUNCTION GAUGE ..... 317

**21 – GAUGE 7.2" DIGITAL DISPLAY** ..... 319
GENERAL ..... 319
INDICATOR LAMPS DESCRIPTION ..... 319
TROUBLESHOOTING ..... 320
DIAGNOSTIC TIPS ..... 320
MULTIFUNCTION GAUGE TROUBLESHOOTING ..... 320
PROCEDURES ..... 321
MULTIFUNCTION GAUGE ..... 321

**22 – ACCESSORIES (EFI AND ACE)** ..... 323
GENERAL ..... 323
SYSTEM TESTING ..... 323
SYSTEM DESCRIPTION (HEATED THROTTLE LEVER) ..... 323
SYSTEM DESCRIPTION (HEATED HANDLEBAR GRIPS) ..... 323
PROCEDURES ..... 324
HEATED THROTTLE LEVER ..... 324
HEATED HANDLEBAR GRIPS ..... 324
TESTING THROTTLE LEVER HEAT SWITCH ..... 327
TESTING HANDLEBAR HEATED GRIP SWITCH ..... 327
HEATED SEATS AND PASSENGER HEATED GRIPS ..... 328

**23 – ACCESSORIES (E-TEC)** ..... 331
GENERAL ..... 331
SYSTEM TESTING ..... 331
SYSTEM DESCRIPTION (HEATED THROTTLE LEVER) ..... 331
SYSTEM DESCRIPTION (HEATED HANDLEBAR GRIPS) ..... 332
SETTING THE HEATED THROTTLE LEVER RATIO ..... 332
PROCEDURES ..... 332
HEATED THROTTLE LEVER ..... 332
HEATED HANDLEBAR GRIPS ..... 333
TESTING THROTTLE LEVER HEAT SWITCH ..... 336
TESTING HANDLEBAR HEATED GRIP SWITCH ..... 337
HEATED SEATS AND PASSENGER HEATED GRIPS ..... 338

**06 DRIVE SYSTEM AND BRAKE**

**01 – DRIVE BELT (EFI AND E-TEC)** ..... 341
GENERAL ..... 342
DRIVE BELT APPLICATION ..... 342
TROUBLESHOOTING ..... 342

**06 DRIVE SYSTEM AND BRAKE** (cont'd)
**01 – DRIVE BELT (EFI AND E-TEC)** (cont'd)
PROCEDURES ... 342
DRIVE BELT GUARD ... 342
DRIVE BELT GUARD SUPPORT ... 343
DRIVE BELT ... 343
**02 – DRIVE BELT (ACE)** ... 347
GENERAL ... 348
DRIVE BELT APPLICATION ... 348
TROUBLESHOOTING ... 348
PROCEDURES ... 348
DRIVE BELT GUARD ... 348
DRIVE BELT GUARD SUPPORT ... 349
DRIVE BELT ... 349
**03 – DRIVE PULLEY (EFI, 900 ACE AND 900 ACE TURBO)** ... 353
GENERAL ... 354
PROCEDURES ... 354
DRIVE PULLEY ... 354
**04 – DRIVE PULLEY (600 ACE)** ... 365
GENERAL ... 366
TROUBLESHOOTING ... 366
PROCEDURES ... 366
DRIVE PULLEY ... 366
**05 – DRIVE PULLEY (E-TEC)** ... 375
GENERAL ... 376
ADJUSTMENT ... 376
MODIFYING THE RAMP CAM SETTING ... 377
PROCEDURES ... 377
DRIVE PULLEY ... 377
**06 – DRIVEN PULLEY AND COUNTERSHAFT (EFI)** ... 387
GENERAL ... 388
PROCEDURES ... 388
DRIVEN PULLEY ... 388
COUNTERSHAFT ... 395
COUNTERSHAFT BEARING ... 395
COUNTERSHAFT BEARING SUPPORT ... 396
**07 – DRIVEN PULLEY AND COUNTERSHAFT (ACE)** ... 397
GENERAL ... 399
PROCEDURES ... 399
DRIVEN PULLEY ... 399
COUNTERSHAFT ... 408
COUNTERSHAFT BEARING ... 408
COUNTERSHAFT BEARING SUPPORT ... 409
**08 – DRIVEN PULLEY AND COUNTERSHAFT (E-TEC)** ... 411
GENERAL ... 413
PROCEDURES ... 413
DRIVEN PULLEY ... 413
COUNTERSHAFT ... 421
COUNTERSHAFT BEARING ... 421
COUNTERSHAFT BEARING SUPPORT ... 422
**09 – BRAKE** ... 423
GENERAL ... 425
MAINTENANCE ... 425
RECOMMENDED BRAKE FLUID ... 425
VERIFYING THE BRAKE FLUID LEVEL ... 425

# TABLE OF CONTENTS


**06 DRIVE SYSTEM AND BRAKE** (cont'd)

**09 – BRAKE** (cont'd)

MAINTENANCE (cont'd)

REPLACING THE BRAKE FLUID ..... 425
BLEEDING THE BRAKE SYSTEM ..... 426
INSPECTING THE BRAKE HOSE, PADS AND DISC ..... 427
LUBRICATING THE BRAKE LEVER PIVOT ..... 427

PROCEDURES ..... 427

BRAKE PADS ..... 427
CALIPER ..... 429
BRAKE DISC ..... 431
MASTER CYLINDER ..... 432
BRAKE LEVER ..... 433
BRAKE LIGHT SWITCH ..... 433
BRAKE HOSE ..... 434

**10 – CHAINCASE** ..... 435

GENERAL ..... 437

MAINTENANCE ..... 437

CHAINCASE OIL ..... 437
DRIVE CHAIN ..... 438

PROCEDURES ..... 438

CHAINCASE ..... 438
SPEED SENSOR (VSS) ..... 444

**11 – GEARBOX (STD)** ..... 447

GENERAL ..... 451

SYSTEM DESCRIPTION ..... 451

ADJUSTMENT ..... 451

SHIFTER LINK ROD ADJUSTMENT ..... 451

MAINTENANCE ..... 452

CHAINCASE OIL ..... 452
DRIVE CHAIN ..... 453

TROUBLESHOOTING ..... 454

DIAGNOSTIC TIPS (ELECTRO-MECHANICAL REVERSE) ..... 454
TESTING SEQUENCE (ELECTRO-MECHANICAL REVERSE) ..... 454

PROCEDURES ..... 454

SHIFT LEVER ..... 454
ELECTRO-MECHANICAL REVERSE ..... 455
REVERSE MECANISM POSITION SWITCHES ..... 458
CHAINCASE ..... 459
SPEED SENSOR (VSS) ..... 469

**12 – GEARBOX (HI/LO)** ..... 473

GENERAL ..... 477

SYSTEM DESCRIPTION ..... 477

ADJUSTMENT ..... 477

ADJUSTING THE SHIFTER LINK ROD ..... 477

MAINTENANCE ..... 478

GEARBOX OIL ..... 478
DRIVE CHAIN ..... 479

TROUBLESHOOTING ..... 480

DIAGNOSTIC TIPS (ELECTRO-MECHANICAL REVERSE - ACE ENGINE) ..... 480
TESTING SEQUENCE (ELECTRO-MECHANICAL REVERSE - ACE ENGINE) ..... 480

PROCEDURES ..... 480

SHIFT LEVER ..... 480
ELECTRO-MECHANICAL REVERSE - ACE ENGINE ..... 481
REVERSE MECHANISM POSITION SWITCHES ..... 484

# TABLE OF CONTENTS


**06 DRIVE SYSTEM AND BRAKE** (cont'd)

**12 – GEARBOX (HI/LO)** (cont'd)

PROCEDURES (cont'd)

GEARBOX ..... 485
SHIFT FORK ..... 496
SPEED SENSOR (VSS) ..... 497

**13 – DRIVE AXLE** ..... 501
GENERAL ..... 502
PROCEDURES ..... 502
DRIVE AXLE ..... 502
MAGNETIC CAPS ..... 503

**14 – TRACK** ..... 505
MAINTENANCE ..... 505
INSPECTING THE TRACK ..... 505
ADJUSTING AND ALIGNING THE TRACK ..... 505
PROCEDURES ..... 507
TRACK ..... 507

**07 CHASSIS**

**01 – SUSPENSION ADJUSTMENTS** ..... 509
GENERAL ..... 509
ADJUSTMENT ..... 509
STOPPER STRAP ..... 509
SPRING PRELOAD ..... 511

**02 – FRONT SUSPENSION** ..... 515
GENERAL ..... 516
ADJUSTMENT ..... 516
SPRINGS ..... 516
DAMPERS ..... 516
PROCEDURES ..... 517
SHOCK ABSORBER ..... 517
SPRING ..... 518
UPPER SUSPENSION ARM ..... 518
UPPER BALL JOINT ..... 519
LOWER SUSPENSION ARM ..... 520
LOWER BALL JOINT ..... 521
SKI LEG ..... 522
STABILIZER BAR ..... 522

**03 – AIR CONTROLLED SUSPENSION (ACS)** ..... 525
GENERAL ..... 528
SYSTEM DESCRIPTION (FEATURES) ..... 528
SYSTEM DESCRIPTION (COMPONENTS) ..... 529
TROUBLESHOOTING ..... 529
DIAGNOSTIC TIPS ..... 529
TESTING SEQUENCE ..... 530
PROCEDURES ..... 530
ACS SHOCK ABSORBER ..... 530
AIR CONTROLLED SUSPENSION (ACS) COMPRESSOR ..... 530
CHECK VALVE ..... 534
PRESSURE SENSOR (PS) ..... 535
ACS SOLENOID VALVE ..... 536
ACS MANIFOLD ..... 538
ACS HOSES ..... 539



Midwest Manuals
Green Manuals
Paperless Manuals
For a Better Tomorrow
www.green-manuals.com
If you bought this manual from any other seller please leave them
NEGATIVE feedback and notify us at bestshopmanuals@gmail.com

# TABLE OF CONTENTS


**07 CHASSIS** (cont'd)

**04 – REAR SUSPENSION (EFI)** ..... 541
ADJUSTMENT ..... 546
MAINTENANCE ..... 546
INSPECTING THE REAR SUSPENSION MECHANISM AND STOPPER STRAP ..... 546
INSPECTING THE SLIDER SHOES ..... 546
LUBRICATING THE REAR SUSPENSION ..... 546
PROCEDURES ..... 546
SUSPENSION ASSEMBLY ..... 546
REAR AXLE ..... 548
REAR EXTENSION ..... 549
SHOCK ABSORBERS ..... 550
REAR SPRINGS ..... 551
SLIDER SHOES ..... 553
FRONT ARM ..... 554
REAR ARM ..... 555
PIVOT ARM ..... 556
IDLER WHEELS AND SUPPORTS ..... 557
STOPPER STRAP ..... 557

**05 – REAR SUSPENSION (ALL EXCEPT EFI)** ..... 559
ADJUSTMENT ..... 566
MAINTENANCE ..... 566
INSPECTING THE REAR SUSPENSION MECHANISM AND STOPPER STRAP ..... 566
INSPECTING THE SLIDER SHOES ..... 566
LUBRICATING THE REAR SUSPENSION ..... 566
PROCEDURES ..... 567
SUSPENSION ASSEMBLY ..... 567
REAR AXLE ..... 568
REAR EXTENSION ..... 569
SHOCK ABSORBERS ..... 570
REAR SPRINGS ..... 572
SLIDER SHOES ..... 573
FRONT ARM ..... 574
REAR ARM ..... 575
PIVOT ARM ..... 577
IDLER WHEELS AND SUPPORTS ..... 578
STOPPER STRAP ..... 578

**06 – STEERING SYSTEM** ..... 579
GENERAL ..... 584
ADJUSTMENT ..... 584
ALIGNING THE STEERING ..... 584
INSPECTION ..... 585
INSPECTING THE SKI AND RUNNER ..... 585
INSPECTING THE STEERING MECHANISM ..... 585
PROCEDURES ..... 585
SKI RUNNER ..... 585
SKIS ..... 586
ADJUSTABLE RUNNER MECHANISM ..... 588
SKI HANDLES ..... 591
SKI LEG ..... 591
HANDLEBAR GRIP ..... 592
MULTIFUNCTION SWITCH ..... 592
THROTTLE LEVER HOUSING (iTC) ..... 593
HANDLEBAR ..... 594
HANDLEBAR EXTENSION ..... 595

**07 CHASSIS** (cont'd)
**06 – STEERING SYSTEM** (cont'd)
PROCEDURES (cont'd)
TIE-RODS ..... 596
STEERING COLUMN ..... 598
STEERING RACK ..... 600
**07 – BODY** ..... 601
GENERAL ..... 602
CLEANING ..... 602
REPAIRING BODY PARTS ..... 603
PROCEDURES ..... 603
DECAL ..... 603
SIDE PANEL ..... 603
WINDSHIELD ..... 604
STORAGE COMPARTMENT COVER ..... 604
GAUGE SUPPORT ..... 605
UPPER BODY MODULE ..... 606
UPPER BODY MODULE COMPONENTS ..... 607
CONSOLE ..... 607
FRONT BUMPER ..... 608
FRONT BOTTOM PAN ..... 608
SIDE BOTTOM PAN ..... 609
OPERATOR SEAT ..... 610
PASSENGER SEAT (ON APPLICABLE MODELS) ..... 612
STORAGE COMPARTMENT ..... 612
REAR HITCH ..... 613
REAR RACK ..... 613
REAR BUMPER (IF EQUIPPED) ..... 613
MULTI-LINQ PLATE ..... 613
**08 – FRAME (EFI AND E-TEC)** ..... 615
GENERAL ..... 619
PROCEDURES ..... 619
RIVETS ..... 619
FRAME ..... 620
REAR BUMPER ..... 620
REAR FRAME MEMBER ..... 620
FRONT SUSPENSION MODULE ..... 621
ENGINE MODULE ..... 622
TUNNEL MODULE ..... 625
HEAT EXCHANGER ..... 627
COUNTERSHAFT BEARING SUPPORT ..... 629
**09 – FRAME (ACE)** ..... 631
GENERAL ..... 635
PROCEDURES ..... 635
RIVETS ..... 635
FRAME ..... 636
REAR BUMPER ..... 636
REAR FRAME MEMBER ..... 636
FRONT SUSPENSION MODULE ..... 637
ENGINE MODULE ..... 638
TUNNEL MODULE ..... 641
HEAT EXCHANGER ..... 643
COUNTERSHAFT BEARING SUPPORT ..... 645

# TABLE OF CONTENTS


**08 TECHNICAL SPECIFICATIONS**

**01 – VEHICLES - EFI** ..... 649
**02 – VEHICLES - ACE, EXCEPT 900 ACE SWT** ..... 657
**03 – VEHICLES - 900 ACE SWT** ..... 667
**04 – VEHICLES - E-TEC** ..... 675

**09 WIRING DIAGRAM**

**01 – WIRING DIAGRAM INFORMATION** ..... 693
GENERAL ..... 693
WIRING DIAGRAM LOCATION ..... 693
WIRING DIAGRAM WITH COLORED LINES ..... 693
WIRING DIAGRAM CODES ..... 693
FOLLOWING A CIRCUIT ..... 694
WIRE COLORS AND SIZES ..... 694
SPLICES IN WIRING HARNESS ..... 694



## Extras NOT Included In The Book Version

Online Parts Manual (Must have an internet connection to use)

2023 Technical Presentation (Dealer Only)

Expanded Diagnostic & Fault Codes (Dealer Only)

2023 Operator's Guide/Owner's Manual

2023 Product Spec Book (Vehicles, Accessories. Parts & Maintenance, and Apparel)

# SAFETY NOTICE

This manual has been prepared as a guide to servicing and repair the Ski-Doo® snowmobile from the REV™ Gen4 platform.

This edition was primarily published to be used by mechanical technicians who are already familiar with all service procedures relating to BRP products. Mechanical technicians should attend training courses given by BRPTI.

Please note that the instructions in this manual will apply only if proper hand tools and special service tools are used.

The contents of this manual depicts parts and/or procedures applicable to a particular product at the time of writing. Service and warranty bulletins may be published to update the content of this manual. Dealer modifications that were carried out after manufacturing of the product, whether or not authorized by BRP, are not included.

In addition, the sole purpose of the illustrations throughout the manual, is to assist identification of the general configuration of the parts. They are not to be interpreted as technical drawings or exact replicas of the parts.

The use of BRP parts is most strongly recommended when considering replacement of any component. Dealer and/or distributor assistance should be sought in case of doubt.

The engines and the corresponding components identified in this document should not be utilized on product(s) other than those mentioned in this document.

It is understood that certain modifications may render use of the vehicle illegal under existing federal, provincial and state regulations.

This manual emphasizes particular information which, is denoted by the following wording and symbols:

**⚠ WARNING**

Indicates a potential hazard that, if not avoided, could result in serious injury or death.

**⚠ CAUTION** Indicates a hazardous situation which, if not avoided, could result in minor or moderate injury.

***NOTICE*** Indicates an instruction which, if not followed, could result in severe damage to vehicle components or other property.

NOTE: Indicates supplementary information required to fully complete an instruction.

Although the mere reading of such information does not eliminate the hazard, your understanding of the information provided will promote its correct use.

Always observe common shop safety practice.

Unless otherwise noted, the engine must be stopped and the tether cord must be removed prior to perform any services.

Torque wrench tightening specifications must be strictly adhered to. Use the torque values and service products as in the exploded views or in the procedures when noted.

Locking devices when removed must be replaced (e.g.: locking tabs, elastic stop nuts, self-locking fasteners, cotter pins, etc.).

Hoses, cables and locking ties removed during a procedure must be reinstalled as per factory standards.

When ordering parts always refer to the specific model *PARTS CATALOGS*.

We strongly recommend that any services be carried out and/or verified by a highly skilled professional mechanic.

It is understood that this manual may be translated into another language. In the event of any discrepancy, the English version shall prevail.

BRP disclaims liability for all damages and/or injuries resulting from the improper use of the contents of this publication.

## IMPORTANT SAFETY PRECAUTIONS

We do not provide warnings about many basic shop safety practices (e.g.: Use Grinding Wheel – wear safety glasses). If you have not received shop safety training or do not feel confident about your knowledge of safe servicing practices, we recommend that you do not attempt to perform the procedures described in BRP shop manuals.

You should have a clear understanding of all basic shop safety practices. You should be wearing the appropriate clothing, using appropriate safety

equipment and taking all necessary safety precautions. Please be especially careful of the following:

- Read and understand all instructions before you begin a procedure or repair.
- Ensure you have the proper tools, any necessary replacement parts and the skills to perform the tasks safely and completely.
- Protect your eyes by using approved and properly fitted safety glasses.
- Use other protective wear when necessary, for example safety shoes and gloves.
- Unless the service procedure requires that the engine remain running, make sure the engine is off **before** beginning service.
- Be sure there is adequate ventilation whenever you run the engine, to avoid the risk of Carbon Monoxide poisoning.
- To avoid injury from moving parts, make sure your hands, fingers and clothing are out of the way when the engine is running.
- Gasoline vapors and hydrogen gases from batteries are explosive. Keep all cigarettes, sparks and flames away from the battery, fuel-related components and other enclosed compartments.
- Never use gasoline to clean parts, always use an approved nonflammable solvent.
- Never drain or store gasoline in an open container.

**⚠ WARNING**

**The foregoing list represents general safety practices. For details on workplace health and safety requirements in your area, consult your local workplace health and safety agency or association.**

We have provided you with some of the most important general service safety precautions, above. We cannot, however, warn you of every conceivable hazard that can arise in performing the service and repair procedures depicted in BRP manuals. Only you can decide whether or not you should perform a given task.

# INTRODUCTION

The information and component/system descriptions contained in this manual are correct at time of writing. BRP however, maintains a policy of continuous improvement of its products without imposing upon itself any obligation to install them on products previously manufactured.

Due to late changes, there may be some differences between the manufactured product and the description and/or specifications in this document.

BRP reserves the right at any time to discontinue or change specifications, designs, features, models or equipment without incurring obligation.

## VEHICLE INFORMATION

### VEHICLE IDENTIFICATION NUMBER (VIN)

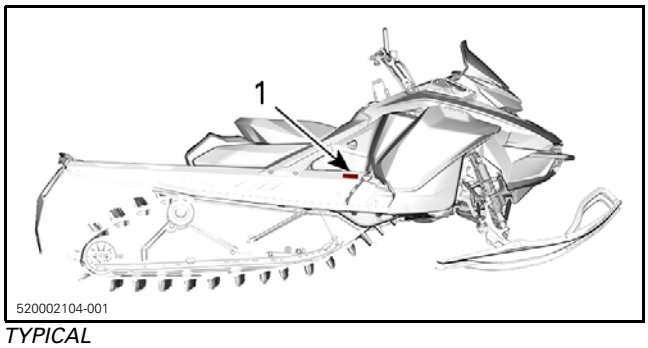


*TYPICAL*
*1. Vehicle description decal*

#### Identification Number Description

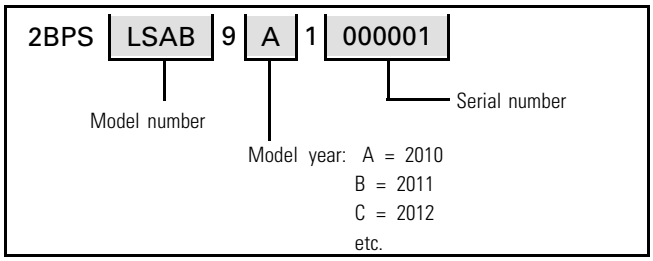


### ENGINE IDENTIFICATION NUMBER (EIN)

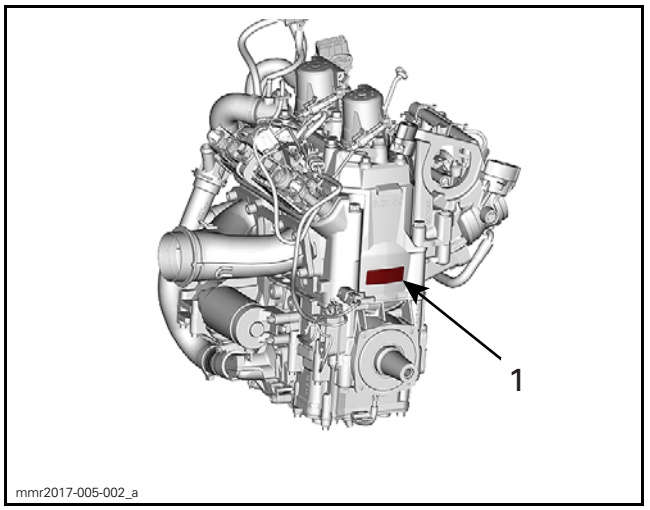


*TYPICAL*
*1. Engine serial number*

### COMPLIANCE LABEL

#### Regulation (EU) 2016/1628 applicable for Non-Road Mobile Machineries

Vehicles who comply to Regulation (EU) 2016/1628 (NRMM) are identified on the engine.

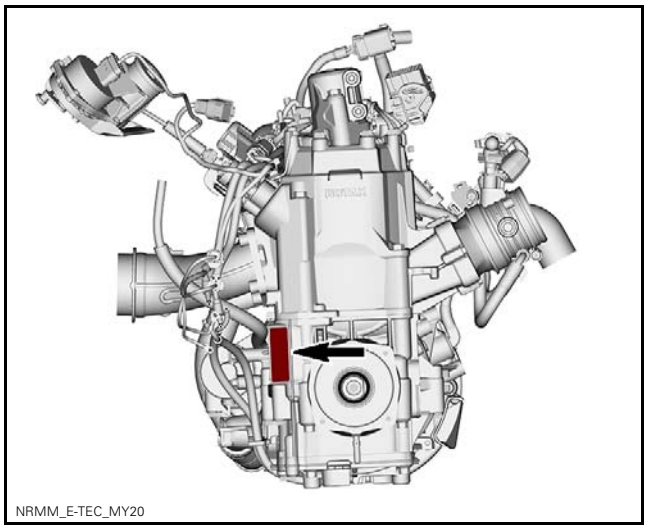


*TYPICAL*

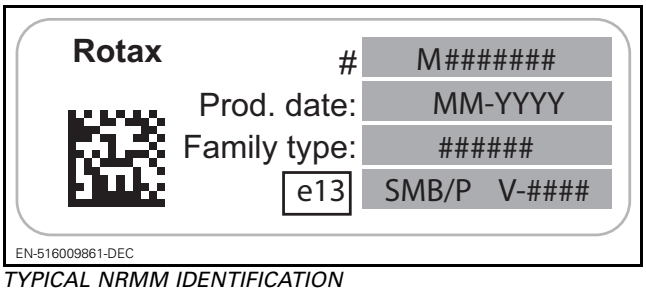


*TYPICAL NRMM IDENTIFICATION*

Depending on your particular vehicle configuration, an additional NRMM identification decal may be installed on the tunnel, near the chaincase.

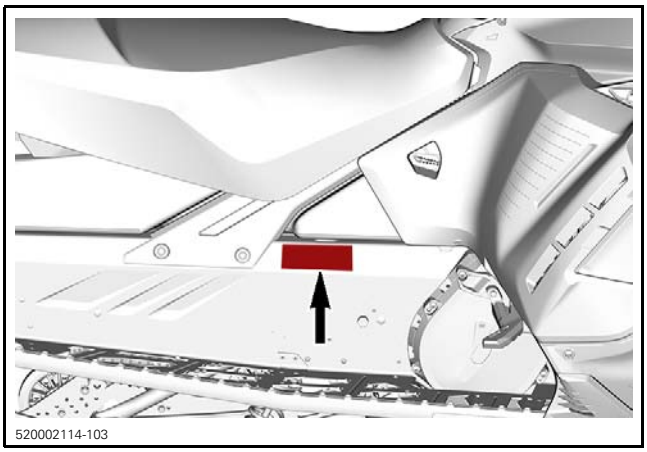


*TYPICAL - ON RH SIDE OF TUNNEL*

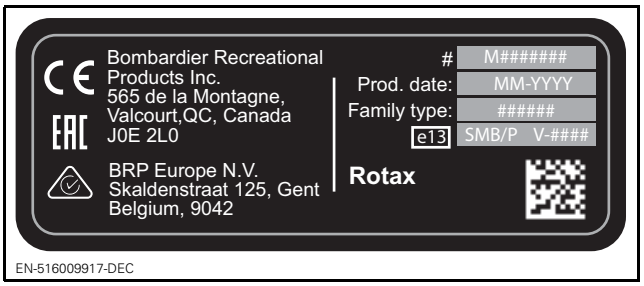


*TYPICAL NRMM IDENTIFICATION ON VEHICLE*

## SNOWMOBILE LIFTING

To lift the snowmobile securely, place the loops of the lifting tool around the rollers at the front of the footrests.

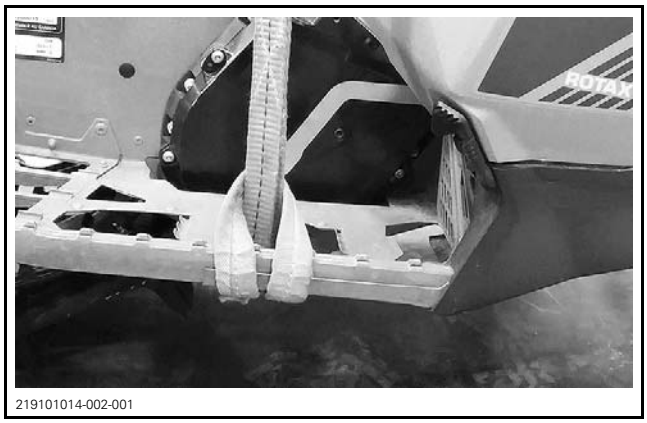


**NOTICE** Do not use other footrest openings or steering column to lift the snowmobile. Frame or steering system could be seriously damaged.

# ENGINE EMISSIONS INFORMATION

## MANUFACTURER'S RESPONSIBILITY

Manufacturers of engines must determine the exhaust emission levels for each engine horsepower family and certify these engines with the United States of America Environmental Protection Agency (EPA). An emissions control information label, showing emission levels and engine specifications, must be placed on each vehicle at the time of manufacture.

## DEALER RESPONSIBILITY

When servicing any vehicle that carry an emissions control information label, adjustments must be kept within published factory specifications.

Replacement or repair of any emission related component must be executed in a manner that maintains emission levels within the prescribed certification standards.

Dealers are not to modify the engine in any manner that would alter the horsepower or allow emission levels to exceed their predetermined factory specifications.

Exceptions include manufacturer's prescribed changes.

## OWNER RESPONSIBILITY

The owner/operator is required to have engine maintenance performed to maintain emission levels within prescribed certification standards.

The owner/operator is not to, and should not allow anyone else to modify the engine in any manner that would alter the horsepower or allow emissions levels to exceed their predetermined factory specifications.

## EMISSION REGULATIONS

The vehicle you are servicing may have been certified to applicable emission regulations in your country or state. Not as an exhaustive list; this may include standards for engine exhaust emissions, crankcase emissions, permeation emissions and evaporative emissions. Servicing procedures in this manual must be strictly followed in order to keep the vehicle within the factory specifications. Failure to follow servicing procedures in this manual may lead a vehicle to be out of compliance with applicable emission regulations.

When servicing any vehicle; adjustments must be kept within published factory specifications. Replacement or repair of any emission related component must be executed in a manner that maintains emission levels within the applicable certification standards. Nobody is allowed to modify the engine in any manner that would alter the horsepower or allow emission levels to exceed their predetermined factory specifications. Exceptions include manufacturer's prescribed changes.

The owner/operator is required to have engine maintenance performed to maintain emission levels within the prescribed certification standards. The owner/operator is allowed and should not allow anyone else to modify the engine in any manner that would alter the horsepower or allow emissions levels to exceed their predetermined factory specifications.

# MANUAL INFORMATION

## MANUAL PROCEDURES

Many of the procedures in this manual are interrelated. Before undertaking any task, you should read and thoroughly understand the entire section or subsection in which the procedure is contained.

**⚠ WARNING**

**Unless otherwise specified, the engine should be turned OFF and cold for all maintenance and repair procedures.**

A number of procedures throughout the book require the use of special tools. Before starting any procedure, be sure that you have on hand all required tools, or their approved equivalents.

The use of RIGHT and LEFT indications in the text are always referenced to the driving position (sitting on the vehicle).

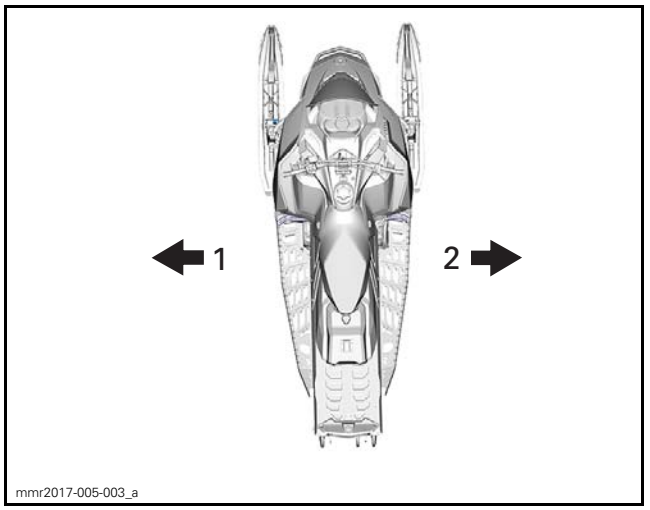


*1. Left*
*2. Right*

This manual uses technical terms which may be different from the ones of the *PARTS CATALOGS*.

When ordering parts always refer to the specific model *PARTS CATALOGS*.

***NOTICE*** **Most fasteners are metric, and most components are built with parts dimensioned using the metric system. Consult the appropriate *PARTS CATALOG* to obtain and use the correct parts and fasteners. Mismatched or incorrect fasteners could cause damage to the vehicle.**

## MANUAL LAYOUT

This manual is divided into many major sections as can be seen in the main table of contents at the beginning of the manual.

Each section is divided into various subsections, and again, each subsection has one or more divisions.

Illustrations and photos show the typical construction of various assemblies and, in all cases, may not reproduce the full detail or exact shape of the parts used in a particular model vehicle. However, they represent parts which have the same or a similar function.

## TYPICAL PAGE

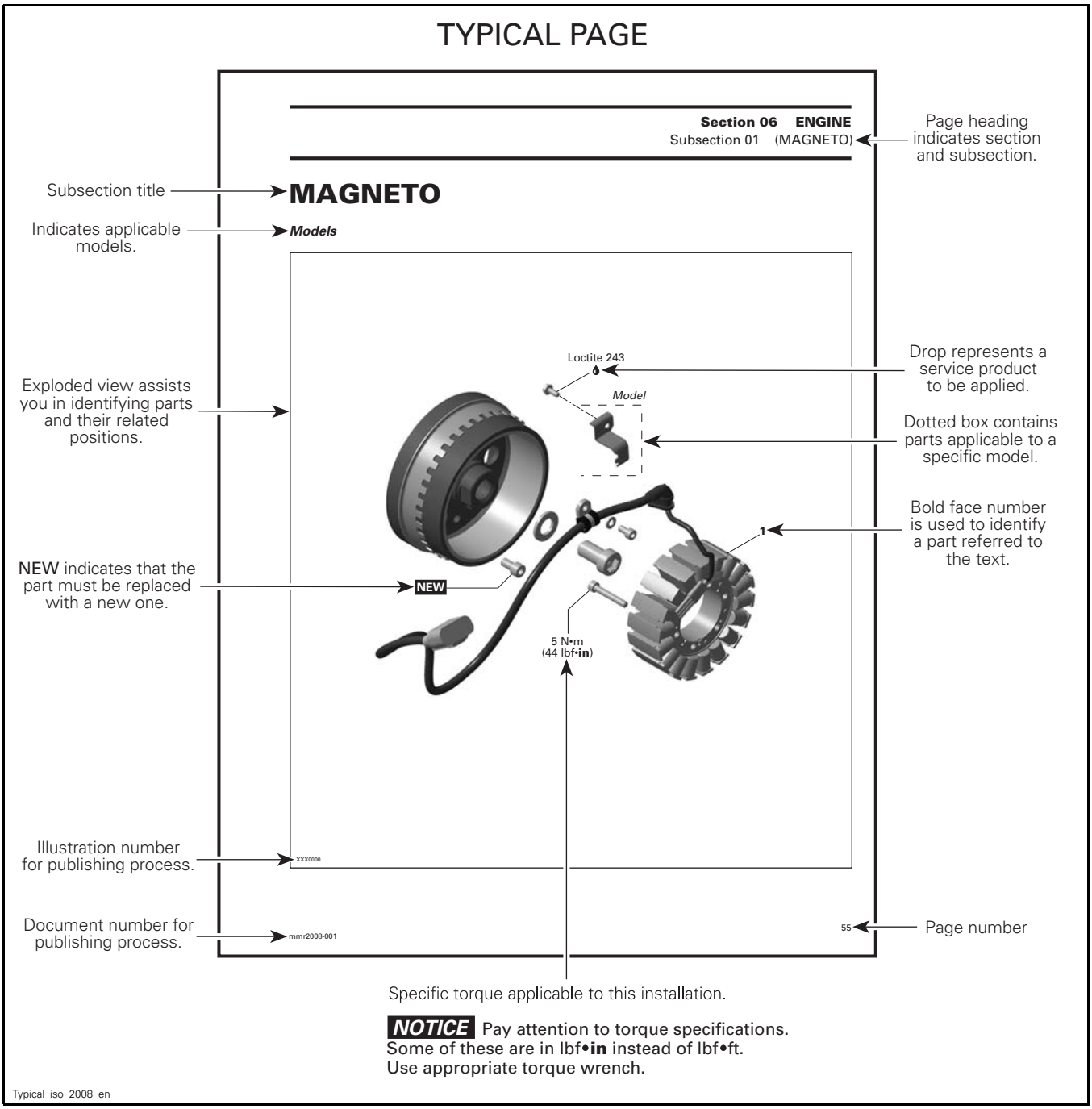

# TYPICAL PAGE



Tittle in bold indicates category of information to be carried out.

## GENERAL

**NOTE:** The following procedures can be done without removing the engine.

During assembly/installation, use the torque values and service products as in the exploded views.

Clean threads before applying a threadlocker. Refer to *SELF-LOCKING FASTENERS* and *LOCTITE APPLICATION* sections at the beginning of this manual for complete procedure.

Reference to a specific section or subsection.

**⚠ WARNING**

**Torque wrench tightening specifications must be strictly adhered to.**
**Locking devices (e.g.: locking tabs, elastic stop nuts, self-locking fasteners, etc.) must be replaced with new ones.**

## PROCEDURES

Indicates component procedures apply to.

### MAGNETO FLYWHEEL

#### Magneto Flywheel Cleaning

Clean all metal components in a non-ferrous metal cleaner.

**CAUTION: Clean magneto flywheel using only a clean cloth.**

Indicates specific procedure to be carried out.

#### Magneto Flywheel Removal

Remove muffler, refer to the *EXHAUST SYSTEM* section.

Remove acoustic panel.

Remove rewind starter.

Remove starting pulley **no. 2**.

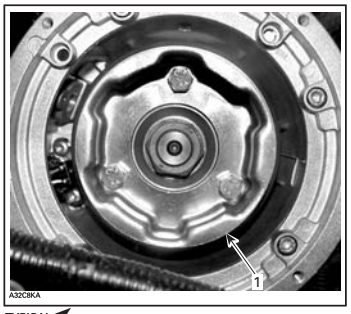


*TYPICAL*
*1. Starting pulley*

"TYPICAL" indicates a general view which may not represent exact details.

Call-outs pertaining to above illustration.

**NOTE:** To remove starting pulley bolts, hold magneto flywheel with a socket as shown.




*TYPICAL*

Illustration always follows text to which it applies.

***Models***

Remove the connecting flange retaining the rewind starter to the engine housing.

Italic bold face typesetting indicates a procedure applicable to a specific model(s).



Bold face number following part name refers to exploded view at beginning of subsection.

typical_txt_2008_en

# TIGHTENING TORQUE

Tighten fasteners to the torque specified in the exploded view(s) and/or in the written procedure. When a torque is not specified, refer to the following table.

**⚠ WARNING**

**Torque wrench tightening specifications must be strictly adhered to.**
**Locking devices when removed (e.g.: locking tabs, elastic stop nuts, self-locking fasteners, cotter pins, etc.) must be replaced.**

In order to avoid a poor assembly, tighten screws, bolts, or nuts in accordance with the following procedure:

1. Manually screw all screws, bolts and/or nuts.
2. Apply half the recommended torque value.
3. Tighten fastener to the recommended torque value.

***NOTICE*** **Be sure to use the recommended tightening torque for the specified fastener used.**

NOTE: When possible, always apply torque on the nut.

NOTE: Always torque screws, bolts and/or nuts using a crisscross pattern when multiple fasteners are used to secure a part (eg. a cylinder head). Some parts must be torqued according to a specific sequence and torque pattern as detailed in the installation procedure.

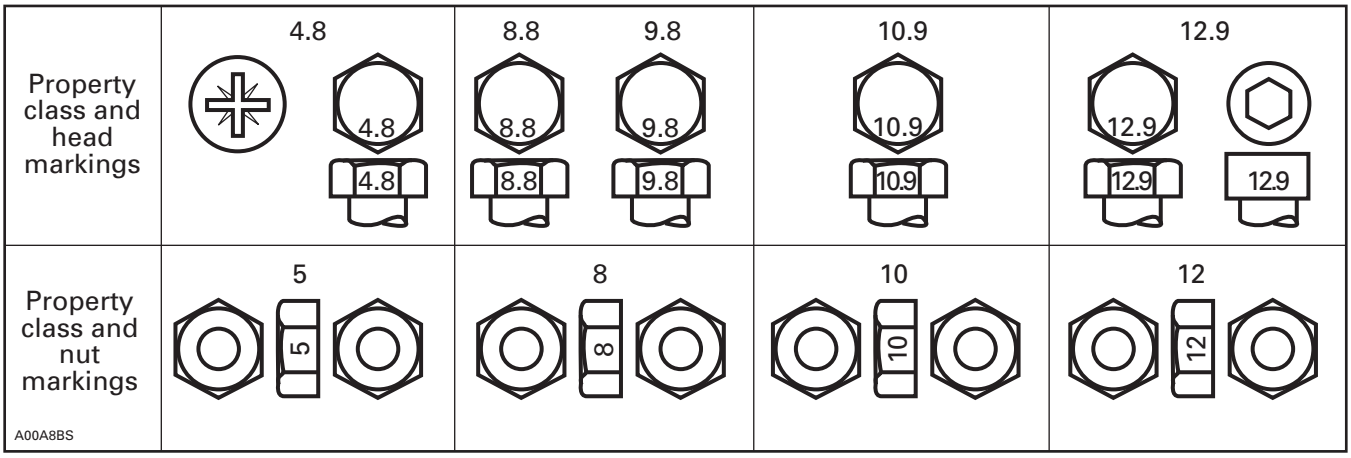


| FASTENER SIZE | FASTENER GRADE/TORQUE | | | |
|---|---|---|---|---|
| | 5.8 Grade | 8.8 Grade | 10.9 Grade | 12.9 Grade |
| M4 | 1.5 – 2 N•m (13 – 18 lbf•**in**) | 2.5 – 3 N•m (22 – 27 lbf•**in**) | 3.5 N•m - 4 N•m (31 lbf•**in** - 35 lbf•**in**) | 4 N•m - 5 N•m (35 lbf•**in** - 44 lbf•**in**) |
| M5 | 3 N•m - 3.5 N•m (27 lbf•**in** - 31 lbf•**in**) | 4.5 N•m - 5.5 N•m (40 lbf•**in** - 49 lbf•**in**) | 7 N•m - 8.5 N•m (62 lbf•**in** - 75 lbf•**in**) | 8 N•m - 10 N•m (71 lbf•**in** - 89 lbf•**in**) |
| M6 | 6.5 N•m - 8.5 N•m (58 lbf•**in** - 75 lbf•**in**) | 8 N•m - 12 N•m (71 lbf•**in** - 106 lbf•**in**) | 10.5 – 15 N•m (93 – 133 lbf•**in**) | 16 N•m (142 lbf•**in**) |
| M8 | 15 N•m (133 lbf•**in**) | 25 N•m (18 lbf•ft) | 32 N•m (24 lbf•ft) | 40 N•m (30 lbf•ft) |
| M10 | 29 N•m (21 lbf•ft) | 48 N•m (35 lbf•ft) | 61 N•m (45 lbf•ft) | 73 N•m (54 lbf•ft) |
| M12 | 52 N•m (38 lbf•ft) | 85 N•m (63 lbf•ft) | 105 N•m (77 lbf•ft) | 128 N•m (94 lbf•ft) |
| M14 | 85 N•m (63 lbf•ft) | 135 N•m (100 lbf•ft) | 170 N•m (125 lbf•ft) | 200 N•m (148 lbf•ft) |

# FASTENER INFORMATION

**NOTICE** Most components in the vehicles are built with parts dimensioned in the metric system. Most fasteners are metric and must not be replaced by customary fasteners or vice-versa. Mismatched or incorrect fasteners could cause damage to the vehicle or possible personal injury.

## SELF-LOCKING FASTENERS PROCEDURE



*TYPICAL — SELF-LOCKING FASTENER*

The following describes common procedures used when working with self-locking fasteners.

Use a metal brush or a tap to properly clean a threaded hole, then use a solvent. Allow the solvent time to act, approximately 30 minutes, then wipe off. Solvent utilization is to ensure proper adhesion of the product used for locking the fastener.

## LOCTITE® APPLICATION PROCEDURE

The following describes common procedures used when working with Loctite products.

NOTE: Always use proper strength Loctite product as recommended in this shop manual.

### Threadlocker Application for Uncovered Holes (Bolts and Nuts)

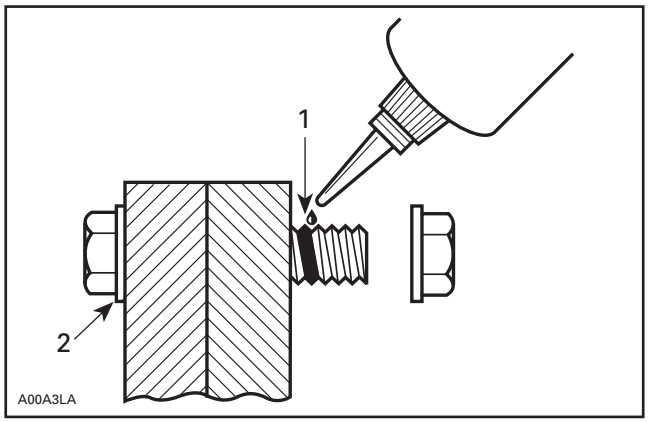


*1. Apply here*
*2. Do not apply*

1. Clean threads (bolt and nut) with solvent.
2. Apply Loctite 7649 (primer) on threads and allow to dry.
3. Choose proper strength Loctite threadlocker.
4. Fit bolt in the hole.
5. Apply a few drops of threadlocker at proposed tightened nut engagement area.
6. Position nut and tighten as required.

### Threadlocker Application for Blind Holes

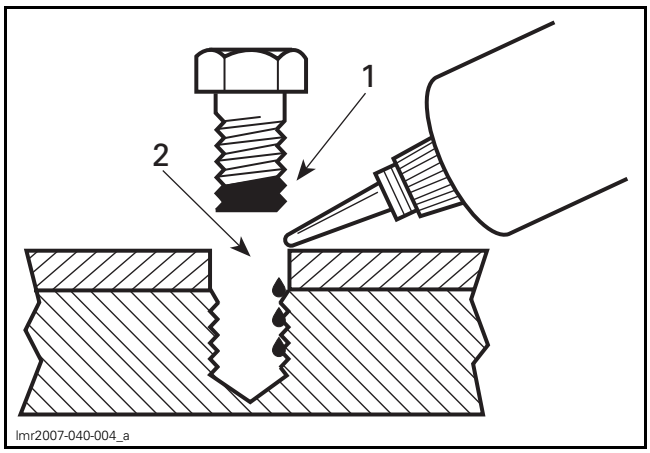


*1. On fastener threads*
*2. On threads and at the bottom of hole*

1. Clean threads (bolt and hole) with solvent.
2. Apply Loctite 7649 (primer) on threads (bolt and nut) and allow to dry for 30 seconds.
3. Choose proper strength Loctite threadlocker.
4. Apply several drops along the threaded hole and at the bottom of the hole.

5. Apply several drops on bolt threads.
6. Tighten as required.

## Threadlocker Application for Stud Installation in Blind Holes

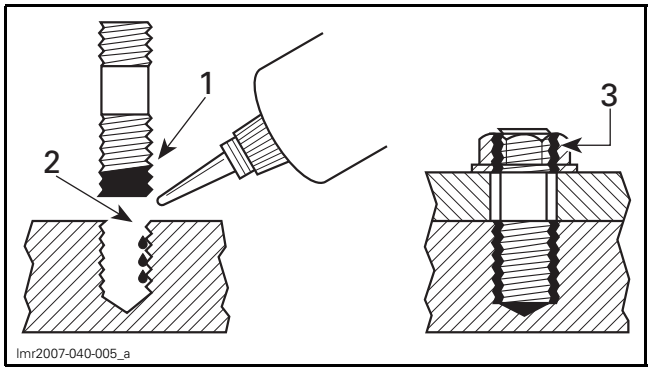


*1. On stud threads*
*2. On threads and in the hole*
*3. On retaining nut threads*

1. Clean threads (stud and hole) with solvent.
2. Apply Loctite 7649 (primer) on threads and allow to dry.
3. Put 2 or 3 drops of proper strength Loctite threadlocker on female threads and in hole.

NOTE: To avoid a hydro lock situation, do not apply too much Loctite.

4. Apply several drops of proper strength Loctite on stud threads.
5. Install stud.
6. Install cover, part, etc.
7. Apply a few drops of proper strength Loctite on uncovered stud threads.
8. Install and tighten retaining nut(s) as required.

## Threadlocker Application for Pre-Assembled Parts

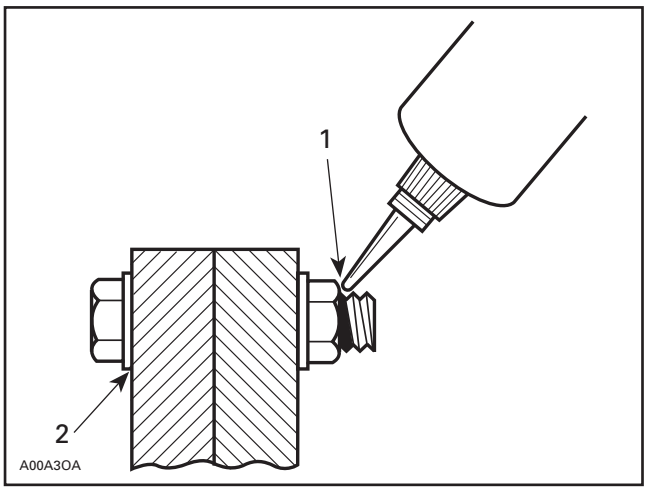


*1. Apply here*
*2. Do not apply*

1. Clean bolts and nuts with solvent.
2. Assemble components.
3. Tighten nuts.
4. Apply a few drops of proper strength Loctite on bolt/nut contact surfaces.
5. Avoid touching metal with tip of flask.

NOTE: For preventive maintenance on existing equipment, retighten nuts and apply proper strength Loctite on bolt/nut contact surfaces.

## Threadlocker Application for an Adjustment Screw

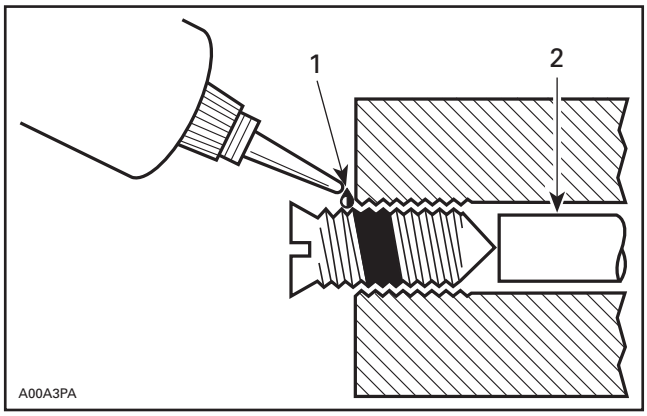


*1. Apply here*
*2. Plunger*

1. Adjust screw to proper setting.
2. Apply a few drops of proper strength Loctite threadlocker on screw/body contact surfaces.
3. Avoid touching metal with tip of flask.

NOTE: If it is difficult to readjust, heat screw with a soldering iron (232°C (450°F)).

## Application for Stripped Thread Repair

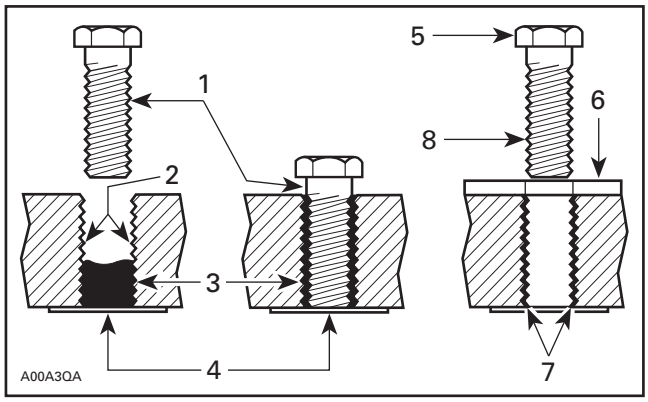


*1. Release agent*
*2. Stripped threads*
*3. Form-A-Thread*
*4. Tapes*
*5. Cleaned bolt*
*6. Plate*
*7. New threads*
*8. Threadlocker*

### Standard Thread Repair

Follow instructions on Loctite FORM-A-THREAD 81668 package.

If a plate is used to align bolt:

1. Apply release agent on mating surfaces.
2. Put waxed paper or similar film on the surfaces.
3. Twist bolt when inserting it to improve thread conformation.

NOTE: NOT intended for engine stud repairs.

### Repair of Small Holes/Fine Threads

Option 1: Enlarge damaged hole, then follow *STANDARD THREAD REPAIR* procedure.

Option 2: Apply FORM-A-THREAD on the screw and insert in damaged hole.

### Permanent Stud Installation (Light Duty)

1. Use a stud of the desired thread length.
2. DO NOT apply release agent on stud.
3. Follow Standard Thread Repair procedure.
4. Allow 30 minutes for Loctite FORM-A-THREAD to cure.
5. Complete part assembly.

## Gasket Compound Application

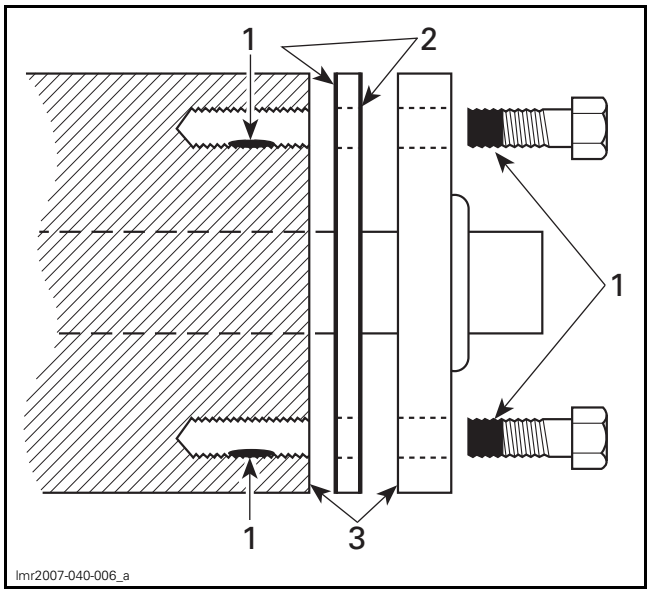


*1. Proper strength Loctite*
*2. Loctite Primer N (P/N 293 800 041) and Gasket Eliminator 518 (P/N 293 800 038) on both sides of gasket*
*3. Loctite Primer N only*

1. Remove old gasket and other contaminants using Loctite chisel (gasket remover). Use a mechanical means only if necessary.

NOTE: Avoid grinding.

2. Clean both mating surfaces with solvent.
3. Spray Loctite Primer N on both mating surfaces and on both sides of gasket and allow to dry 1 or 2 minutes.
4. Apply Loctite 518 on both sides of gasket, using a clean applicator.
5. Place gasket on mating surfaces and assemble parts immediately.

NOTE: If the cover is bolted to blind holes, apply proper strength Loctite in the hole and on threads. Tighten fastener.

If holes are sunken, apply proper strength Loctite on bolt threads.

6. Tighten as usual.

## Threadlocker Application for Mounting on a Shaft

### Mounting with a Press

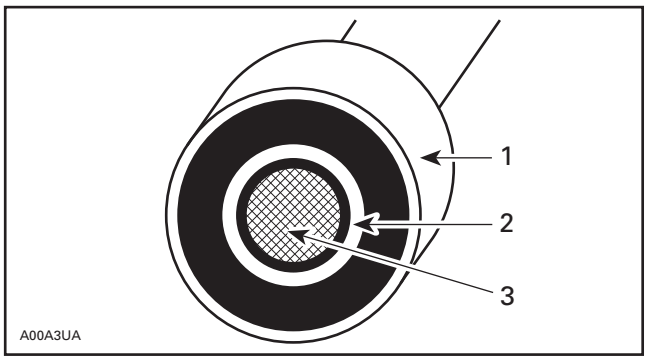


*1. Bearing*
*2. Proper strength Loctite*
*3. Shaft*

1. Clean shaft external contact surface.
2. Clean internal contact surface of part to be installed on shaft.
3. Apply a strip of proper strength Loctite on circumference of shaft contact surface at insertion or engagement point.

NOTE: Retaining compound is always forced out when applied on shaft.

4. DO NOT use antiseize Loctite or any similar product.
5. No curing period is required.

### Mounting in Tandem

1. Apply retaining compound on internal contact surface (bore) of parts to be installed.
2. Continue parts assembly as per previous illustration.

## Threadlocker Application for Case-In Components (Metallic Gaskets)

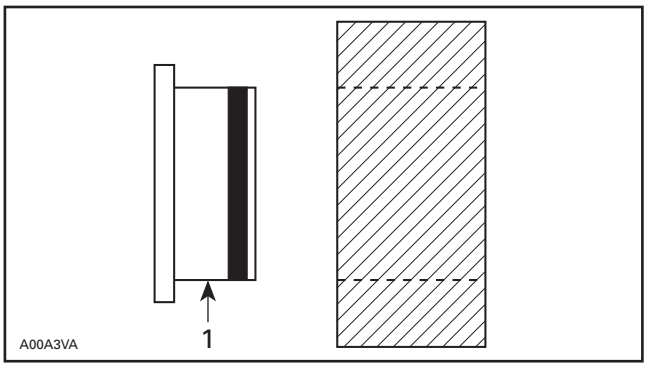


*1. Proper strength Loctite*

1. Clean inner housing diameter and outer gasket diameter.
2. Spray housing and gasket with Loctite 7649 (primer).
3. Apply a strip of proper strength Loctite on leading edge of outer metallic gasket diameter.

NOTE: Any Loctite product can be used here. A low strength liquid is recommended as normal strength and gap are required.

4. Install according to standard procedure.
5. Wipe off excess product.
6. Allow 30 minutes for product to cure.

NOTE: Normally used on worn-out housings to prevent leaking or sliding.

It is generally not necessary to remove gasket compound applied on outer gasket diameter.

# SERVICE TOOLS INDEX

12 V BATTERY SUPPLY CABLE
(P/N 529 035 997)



Page: 121, 275, 304, 307, 311, 331

BALL JOINT EXTRACTOR
(P/N 529 035 827)



Page: 519

BALL JOINT INSTALLER SUPPORT
(P/N 529 036 398)

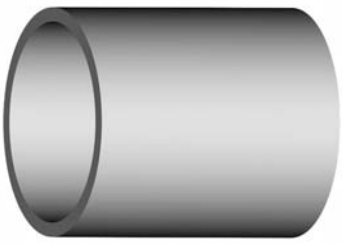

Page: 522

BALL JOINT INSTALLER
(P/N 529 036 399)

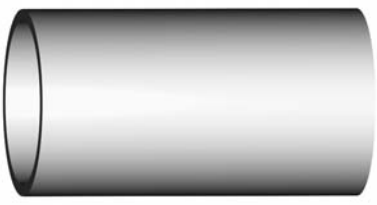

Page: 522

BALL JOINT REMOVER SUPPORT
(P/N 529 036 400)

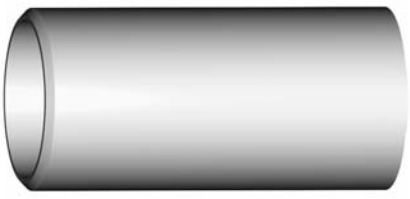

Page: 522

BEARING PULLER DRIVEN SUPPORT
(P/N 529 036 485)



Page: 389, 401–402, 413–414

BEARING PULLER/PUSHER
(P/N 529 036 111)



Page: 440, 463

BEARING PULLER/PUSHER
(P/N 529 036 112)



Page: 440, 463, 492

CALIPER PULLER
(P/N 529 036 145)



Page: 429

CIRCLIP INSTALLER/REMOVER
(P/N 529 036 375)



Page: 355, 378–379

CLUTCH HOLDER
(P/N 529 036 235)



Page: 366, 374

CLUTCH HOLDER
(P/N 529 036 369)



Page: 354, 364, 377, 386

COUNTERSHAFT ADAPTER
(P/N 529 036 424)



Page: 395, 408, 421

# SERVICE TOOLS INDEX

COUNTERSHAFT BEARING INSTALLER
(P/N 529 036 066)

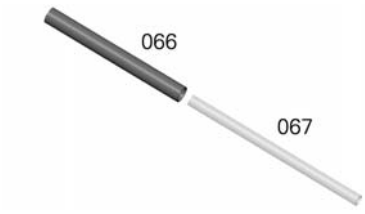


Page: 396, 409, 422

COUNTERSHAFT BEARING REMOVER
(P/N 529 036 065)



Page: 395, 408, 421

COUNTERSHAFT SUPPORT
(P/N 529 036 067)

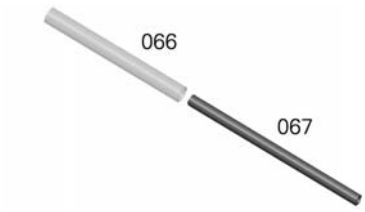


Page: 395, 408, 421

D.E.S.S. POST REMOVER
(P/N 529 035 943)



Page: 257

DIAGNOSTIC CABLE
(P/N 710 000 851)



Page: 121, 304

DIAL INDICATOR ADAPTER
(P/N 529 036 132)



Page: 243, 262

DIAL INDICATOR ADAPTER
(P/N 529 036 418)

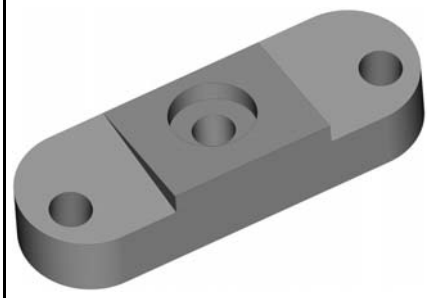

Page: 262

DRIVE PULLEY OPENING TOOL
(P/N 529 036 378)



Page: 355, 378, 382

DRIVE PULLEY PULLER
(P/N 529 000 064)



Page: 366

DRIVE PULLEY SUPPORT
(P/N 529 036 371)



Page: 355, 378–379, 381

DRIVEN ADAPTER
(P/N 529 036 508)



Page: 408, 421

DRIVEN PULLEY SPRING COMPRESSOR
(P/N 529 036 182)



Page: 389, 402, 415

ECM ADAPTER TOOL
(P/N 529 036 166)



Page: 201, 218, 234, 251, 253, 289–290, 294, 304–305, 451, 477

ECM TERMINAL REMOVER 2.25
(P/N 529 036 175)



Page: 201, 218, 234

# SERVICE TOOLS INDEX

ECM TERMINAL REMOVER 3.36
(P/N 529 036 174)



Page: 202, 218, 234

ENGINE LEAK DOWN TEST KIT
(P/N 529 035 661)



Page: 534

ENGINE LIFTING HOOK
(P/N 529 035 829)



Page: 29

ENGINE LIFTING TOOL
(P/N 529 036 217)



Page: 37

ENGINE LIFTING TOOL
(P/N 529 036 402)



Page: 29

FLUKE 115 MULTIMETER
(P/N 529 035 868)



Page: 192, 250, 252, 255, 276–277, 289, 294, 304, 315, 319, 336, 451, 477, 528

FUEL HOSE DISCONNECT TOOL
(P/N 529 036 037)



Page: 35

GREASE INJECTOR
(P/N 529 036 376)



Page: 361, 384

LARGE HOSE PINCHER
(P/N 529 032 500)

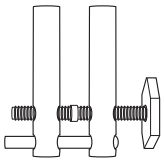

Page: 87, 97

LEAK TEST KIT
(P/N 529 033 100)



Page: 142, 158, 173

MPI-2 INTERFACE CARD
(P/N 529 036 018)



Page: 121, 304

MPI-3 INTERFACE CARD
(P/N 529 036 353)



Page: 121, 304

OETIKER PLIER
(P/N 295 000 070)

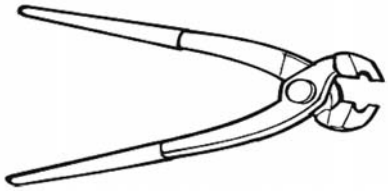

Page: 141, 145, 157, 160, 176

PDRIVE PULLER
(P/N 529 036 370)



Page: 354–355, 377–378

POWER INTERFACE
(P/N 515 177 223)




Page: 121, 275, 300, 302, 304, 307, 311, 331

# SERVICE TOOLS INDEX

PRELOAD TESTER
(P/N 529 036 164)



Page: 399

PRESSURE GAUGE
(P/N 529 036 395)



Page: 143, 159, 174

PROTECTIVE CAP
(P/N 529 036 150)



Page: 429

PULLEY SPRING COMPRESSOR TOOL
(P/N 529 036 012)



Page: 368

PULLEY SPRING COMPRESSOR TOOL
(P/N 529 036 373)

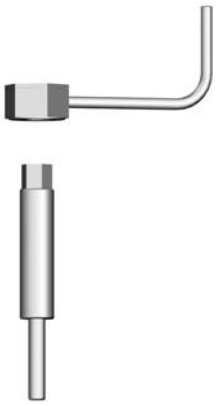

Page: 355, 378–379, 381–382

RADIATOR INSTALLATION GAUGES
(P/N 529 036 422)



Page: 628, 644

RADIATOR INSTALLATION GAUGES
(P/N 529 036 504)



Page: 644

REMOVING AXLE TOOL
(P/N 529 036 372)



Page: 355, 378, 380–382

SMALL HOSE PINCHER
(P/N 295 000 076)

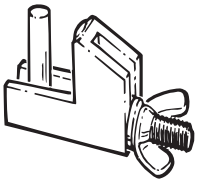

Page: 87, 142, 158, 173

SPRING COMPRESSOR
(P/N 529 036 184)

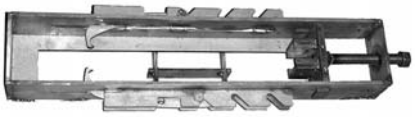

Page: 518

SPRING INSTALLER/REMOVER
(P/N 529 035 983)



Page: 55, 60, 64, 74

SUPERTANIUM DRILL BIT 3/16"
(P/N 529 031 800)



Page: 608, 619, 635

SUSPENSION ARM SUPPORT
(P/N 529 035 637)



Page: 520

T FITTING FUEL PRESSURE
(P/N 529 036 509)



Page: 143, 159, 174

TDC DIAL INDICATOR
(P/N 295 000 143)



Page: 243, 262

TDC DIAL INDICATOR
(P/N 414 104 700)

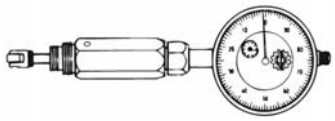

Page: 243, 262

TENSIOMETER
(P/N 414 348 200)



Page: 345, 351, 505

TEST CAP
(P/N 529 035 991)



Page: 86

TRACK CLEAT INSTALLER
(P/N 529 036 044)



Page: 507

UPPER GEAR RETAINING TOOL
(P/N 529 036 110)



Page: 27, 388, 414

UPPER OIL SEAL INSTALLER
(P/N 529 036 510)



Page: 492

VACUUM/PRESSURE PUMP
(P/N 529 021 800)



Page: 86, 100, 142, 158, 173

# REFER TO PERIODIC MAINTENANCE SCHEDULE (EFI)

Click Here

# REFER TO PERIODIC MAINTENANCE SCHEDULE (ACE)

Click Here

# REFER TO PERIODIC MAINTENANCE SCHEDULE (E-TEC)

Click Here

# STORAGE PROCEDURE (EFI)

During summer, or when a snowmobile is not in use for more than three months, proper storage is necessary.

For detailed procedure refer to appropriate *SHOP MANUAL* subsections.

| STORAGE | |
|---|---|
| VEHICLE | Clean the vehicle |
| ENGINE | Lubricate engine. Refer to *ENGINE LUBRICATION* procedure. |
| | Block muffler with rags |
| | Add fuel stabilizer to fuel following the product manufacturer recommendations Run the engine after adding the product to the fuel |
| DRIVE SYSTEM AND BRAKE | Lubricate brake lever pivot |
| | Lift rear of vehicle until track is clear of the ground. Do not release track tension |
| SUSPENSION | Inspect and lubricate rear suspension |
| | Lubricate front and rear suspension |
| ELECTRICAL SYSTEM | Charge battery monthly to keep it fully charged during storage |

**⚠ CAUTION** Use appropriate lifting device or have assistance to share lifting stress. If a lifting device is not used, use proper lifting techniques, notably using your legs force. Do not attempt to lift the rear of vehicle if it is above your limits.

***NOTICE*** The snowmobile has to be stored in a cool and dry place and covered with an opaque but ventilated tarpaulin. This will prevent sun rays and grime from affecting plastic components and vehicle finish.

***NOTICE*** Fuel stabilizer should be added prior to engine lubrication to ensure carburetor protection against varnish deposits.

## PROCEDURES

### ENGINE LUBRICATION

The engine has to be properly lubricated at storage for internal parts protection.

### Engine Storage Mode Using BUDS2 - E-TEC Engine

Connect the vehicle to the BRP diagnostic software (BUDS2). Refer to *COMMUNICATION TOOLS AND B.U.D.S.* subsection.

Select:
- **Functions** page
- **Vehicle** or **ECM** button
- **Routines** tab.

Click on the **Activate Storage** button.

### Engine Storage Mode Using Multi-Function Gauge - E-TEC Engine

To engage procedure, do the following:

1. Place the vehicle in a well ventilated area.
2. Start the engine and let it run at idle speed until it reaches its operating temperature (watch the coolant temperature on the display or verify that the rear heat exchanger becomes warm).
3. Push the SET (S) button to select odometer mode.

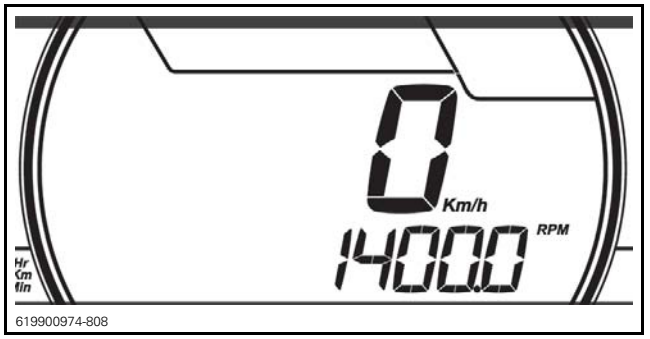

619900974-808

NOTE: The storage mode does not function in other modes (trip A, trip B and hr trip).

4. Repeatedly depress the HI/LOW beam switch rapidly, then, **while doing this**, press and hold the **SET button** until PUSH S appears on the display.

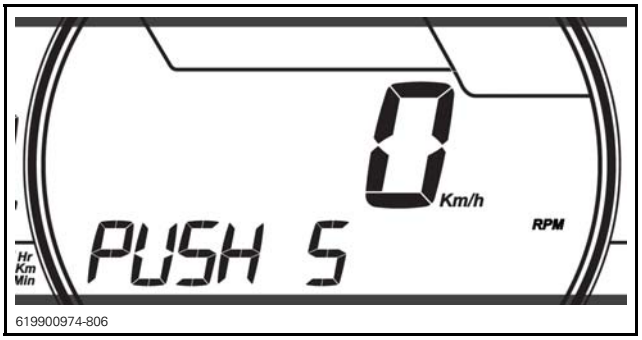

619900974-806

5. Release all buttons when gauge displays PUSH "S" appears.
6. Again, press and hold the SET (S) button for 2 - 3 seconds.

NOTE: The gauge will display OIL when the storage procedure is initiated.

7. When gauge displays OIL, release button and wait for the lubrication function to end.

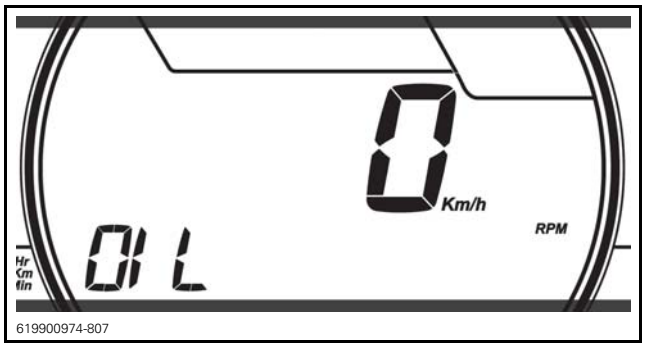


Do not touch anything during engine lubrication cycle.

The engine lubrication function takes approximately 1 minute. During this time, engine RPM will increase slightly to approximately 1600 RPM and the oil pump will "oil flood" the engine.

At the end of engine lubrication function, the ECM will stop the engine.

8. Remove tether cord cap from engine cut-off switch.

**NOTICE** **Do not start the engine during storage period.**

## Engine Storage Procedures - EFI engine

Follow these simple steps.

1. Place the vehicle in a well ventilated area.
2. Open the RH side panel.
3. Add Fuel stabilizer to fuel thank. Follow the manufacturer's recommendations.

| RECOMMENDED SERVICE PRODUCT |
|---|
| XPS fuel stabilizer |

4. Start the engine and let idle until rear heat exchanger gets hot.

The rear heat exchanger can be reached from under the rear end of the chassis.

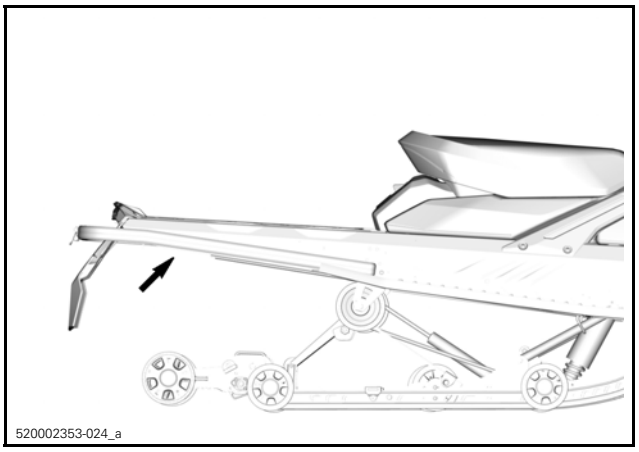


5. Pull on the oil pump cable - at the adjustment - until the exhaust gas turns to darker smoke.

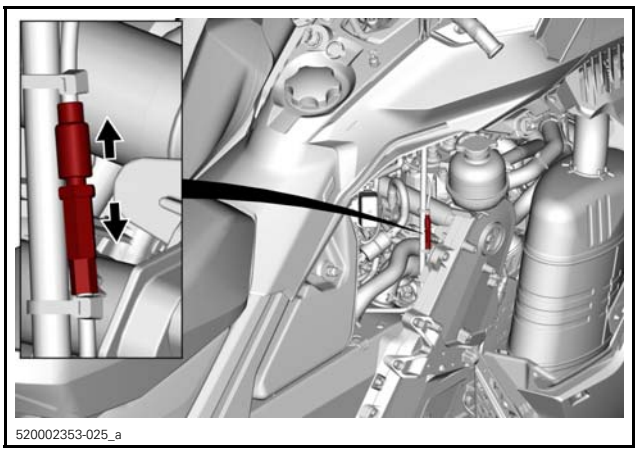


6. Remove the spark plugs and spray storage oil for 5 seconds in each cylinder.

| RECOMMENDED SERVICE PRODUCT |
|---|
| XPS storage oil |

7. Spin the drive pulley for three complete revolutions by hand to distribute the storage oil to coat the cylinder walls.
8. Reinstall the spark plugs and tighten to specification.

| TIGHTENING TORQUE | |
|---|---|
| Spark plug | 28 N•m ± 2 N•m (21 lbf•ft ± 1 lbf•ft) |

# STORAGE PROCEDURE (ACE)

## SERVICE PRODUCTS


| Description | Part Number | Page |
|---|---|---|
| BRP HEAVY DUTY CLEANER | 293 110 001 | 16 |
| CLEANER AND DEGREASER PRO C1 | 779262 | 16 |
| CLUTCH AND PULLEY FLANGE CLEANER PRO S1 | 779244 | 16 |
| FUEL STABILIZER (EUR) | 779183 | 15 |
| FUEL STABILIZER | 779171 | 15 |
| LUBRICANT AND ANTI-CORROSIVE (EUR) | 779224 | 16 |
| LUBRICANT AND ANTI-CORROSIVE | 779168 | 16 |
| OIL STORAGE (EUR) | 779225 | 15 |
| OIL STORAGE (USA) | 779182 | 15 |
| OIL STORAGE | 779173 | 15 |
| PULLEY FLANGE CLEANER (F) | 619 600 022 | 16 |


## GENERAL

If the vehicle is not used or is to be stored for an extended period of time, more than 4 months, be sure to perform the storage procedures described below.

Where applicable, refer to the appropriate subsections in this manual for the required tasks outlined in these procedures.

## PROCEDURES

To facilitate the inspection and ensure adequate lubrication of components, it is recommended to clean the entire vehicle. Refer to *VEHICLE CLEANING* in this subsection.

## FUEL SYSTEM

### Fuel System Protection

With the new fuel additives, it is critical to use the a fuel stabilizer or an equivalent to prevent fuel deterioration and fuel system gumming. Follow the manufacturer's instructions for proper use.

| COUNTRY | SERVICE PRODUCT |
|---|---|
| Scandinavia | FUEL STABILIZER (EUR) (P/N 779183) |
| All other countries | FUEL STABILIZER (P/N 779171) |

***NOTICE*** **Fuel stabilizer should be added prior to engine lubrication to ensure fuel system components protection against varnish deposits.**

Pour fuel stabilizer in fuel tank. Fill up fuel tank.

## ENGINE

### Engine Internal Lubrication

Engine internal parts must be lubricated to protect them from rust formation during the storage period.

Proceed as follows:

1. Remove spark plugs, refer to *IGNITION COILS AND SPARK PLUGS* subsection.
2. Spray storage oil into each cylinder.

NOTE: Use the storage oil as per country availability.

| COUNTRY | SERVICE PRODUCT |
|---|---|
| Scandinavia | OIL STORAGE (EUR) (P/N 779225) |
| USA | OIL STORAGE (USA) (P/N 779182) |
| All other countries | OIL STORAGE (P/N 779173) |

3. Press start button, 1 or 2 seconds maximum, to lubricate cylinders.
4. Reinstall the spark plugs.

NOTE: Do not run engine during storage period.

### Exhaust System

Block muffler outlet with a rag.

### CVT Protection

Remove drive belt. Refer to *DRIVE BELT* subsection.

Inspect and clean pulleys.

| COUNTRY | SERVICE PRODUCT |
|---|---|
| Scandinavia | PULLEY FLANGE CLEANER (F) (P/N 619 600 022) |
| All other countries | CLUTCH AND PULLEY FLANGE CLEANER PRO S1 (P/N 779244) |

Protect pulley faces with anti-corrosive lubricant.

| COUNTRY | SERVICE PRODUCT |
|---|---|
| Scandinavia | LUBRICANT AND ANTI-CORROSIVE (EUR) (P/N 779224) |
| All other countries | LUBRICANT AND ANTI-CORROSIVE (P/N 779168) |

NOTE: Do not reinstall drive belt.

# ELECTRICAL SYSTEM

## Removing the Battery

Remove the battery.

Charge and store battery as per battery manufacturers instructions.

# CHASSIS

## Lubricating the Suspension

Inspect front suspensions Refer to *FRONT SUSPENSION* subsection.

Inspect and lubricate rear suspension. Refer to *REAR SUSPENSION* subsection.

## Track

Lift the rear of vehicle until track is clear of the ground.

Do not release track tension.

## Cleaning the Vehicle

Wash and dry the vehicle.

***NOTICE*** **Never use a high pressure washer to clean the vehicle. USE LOW PRESSURE ONLY (like a garden hose). The high pressure can cause electrical or mechanical damages.**

Remove any dirt or rust.

To clean the vinyl or plastic parts, use only flannel clothes with degreaser.

| SERVICE PRODUCT |
|---|
| CLEANER AND DEGREASER PRO C1 (P/N 779262) |

***NOTICE*** **It is necessary to use flannel cloths on plastic parts to avoid damaging surfaces. Never clean plastic parts with strong detergent, degreasing agent, paint thinner, acetone, products containing chlorine, etc.**

To clean the entire vehicle, including metallic parts use BRP cleaner.

| SERVICE PRODUCT |
|---|
| BRP HEAVY DUTY CLEANER (P/N 293 110 001) |

Inspect the vehicle and repair any damage. Touch up all metal spots where paint has been scratched off. Spray all metal parts with anti-corrosive lubricant.

| COUNTRY | SERVICE PRODUCT |
|---|---|
| Scandinavia | LUBRICANT AND ANTI-CORROSIVE (EUR) (P/N 779224) |
| All other countries | LUBRICANT AND ANTI-CORROSIVE (P/N 779168) |

## Vehicle Protection

Protect the vehicle with a cover to prevent dust accumulation during storage.

***NOTICE*** **The vehicle has to be stored in a cool and dry place and covered with an opaque tarpaulin. This will prevent sun rays and grime from affecting plastic components and vehicle finish.**

# STORAGE PROCEDURE (E-TEC)

During summer, or when a snowmobile is not in use for more than three months, proper storage is necessary.

For detailed procedure refer to appropriate *SHOP MANUAL* subsections.

| STORAGE | |
|---|---|
| VEHICLE | Clean the vehicle |
| ENGINE | Lubricate engine. Refer to *ENGINE LUBRICATION* procedure. |
| | Block muffler with rags |
| | Add fuel stabilizer to fuel following the product manufacturer recommendations Run the engine after adding the product to the fuel |
| DRIVE SYSTEM AND BRAKE | Lubricate brake lever pivot |
| | Lift rear of vehicle until track is clear of the ground. Do not release track tension |
| SUSPENSION | Inspect and lubricate rear suspension |
| | Lubricate front and rear suspension |
| ELECTRICAL SYSTEM | Charge battery monthly to keep it fully charged during storage |

**⚠ CAUTION** Use appropriate lifting device or have assistance to share lifting stress. If a lifting device is not used, use proper lifting techniques, notably using your legs force. Do not attempt to lift the rear of vehicle if it is above your limits.

**NOTICE** The snowmobile has to be stored in a cool and dry place and covered with an opaque but ventilated tarpaulin. This will prevent sun rays and grime from affecting plastic components and vehicle finish.

## PROCEDURES

### ENGINE LUBRICATION

#### Engine Storage Mode Using BUDS2

Connect the vehicle to the BRP diagnostic software (BUDS2). Refer to *COMMUNICATION TOOLS AND B.U.D.S.* subsection.

Select:
– **Functions** page
– **Vehicle** or **ECM** button
– **Routines** tab.

Click on the **Activate Storage** button.

#### Engine Storage Mode Using Multi-Function Gauge

Like other engines, the E-TEC has to be properly lubricated at storage for internal parts protection. The E-TEC system offers a built-in engine storage lubrication function (summerization) that can be initiated by the operator.

To engage procedure, do the following:

1. Place the vehicle in a well ventilated area.
2. Start the engine and let it run at idle speed until it reaches its operating temperature (watch the coolant temperature on the display or verify that the rear heat exchanger becomes warm).
3. Push the SET (S) button to select odometer mode.

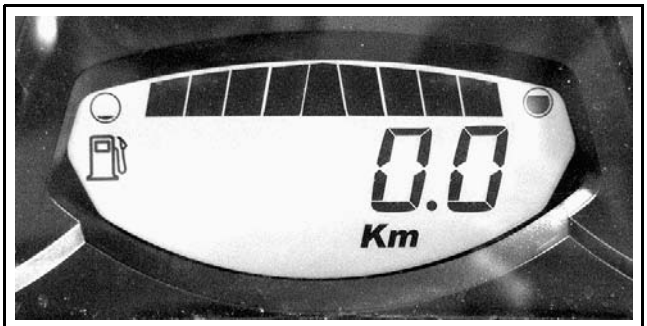

mmr2009-004-002

NOTE: The storage mode does not function in other modes (trip A, trip B and hr trip).

4. Repeatedly depress the HI/LOW beam switch rapidly, then, **while doing this**, press and hold the **SET button** until PUSH S appears on the display.



mmr2009-004-003

5. Release all buttons when gauge displays **PUSH "S"** appears.
6. Again, press and hold the SET (S) button for 2 - 3 seconds.

NOTE: The gauge will display OIL when the storage procedure is initiated.

7. When gauge displays **OIL**, release button and wait for the lubrication function to end.

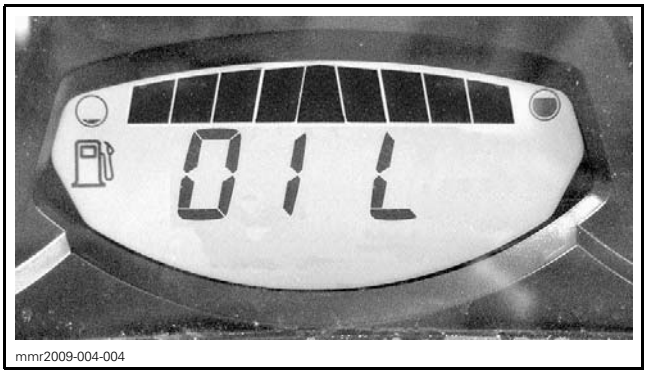

mmr2009-004-004

Do not touch anything during engine lubrication cycle.

The engine lubrication function takes approximately 1 minute. During this time, engine RPM will increase slightly to approximately 1600 RPM and the oil pump will "oil flood" the engine.

At the end of engine lubrication function, the ECM will stop the engine.

8. Remove tether cord cap from engine cut-off switch.

***NOTICE*** **Do not start the engine during storage period.**

# PRESEASON PREPARATION

Proper vehicle preparation is necessary when a vehicle has not been used for more than three months. Using the *MAINTENANCE SCHEDULE*, perform the items titled *EVERY YEAR AT PRESEASON*.

# ENGINE REMOVAL AND INSTALLATION (EFI AND E-TEC)

## SERVICE TOOLS


| Description | Part Number | Page |
|---|---|---|
| ENGINE LIFTING HOOK | 529 035 829 | 29 |
| ENGINE LIFTING TOOL | 529 036 402 | 29 |
| UPPER GEAR RETAINING TOOL | 529 036 110 | 27 |


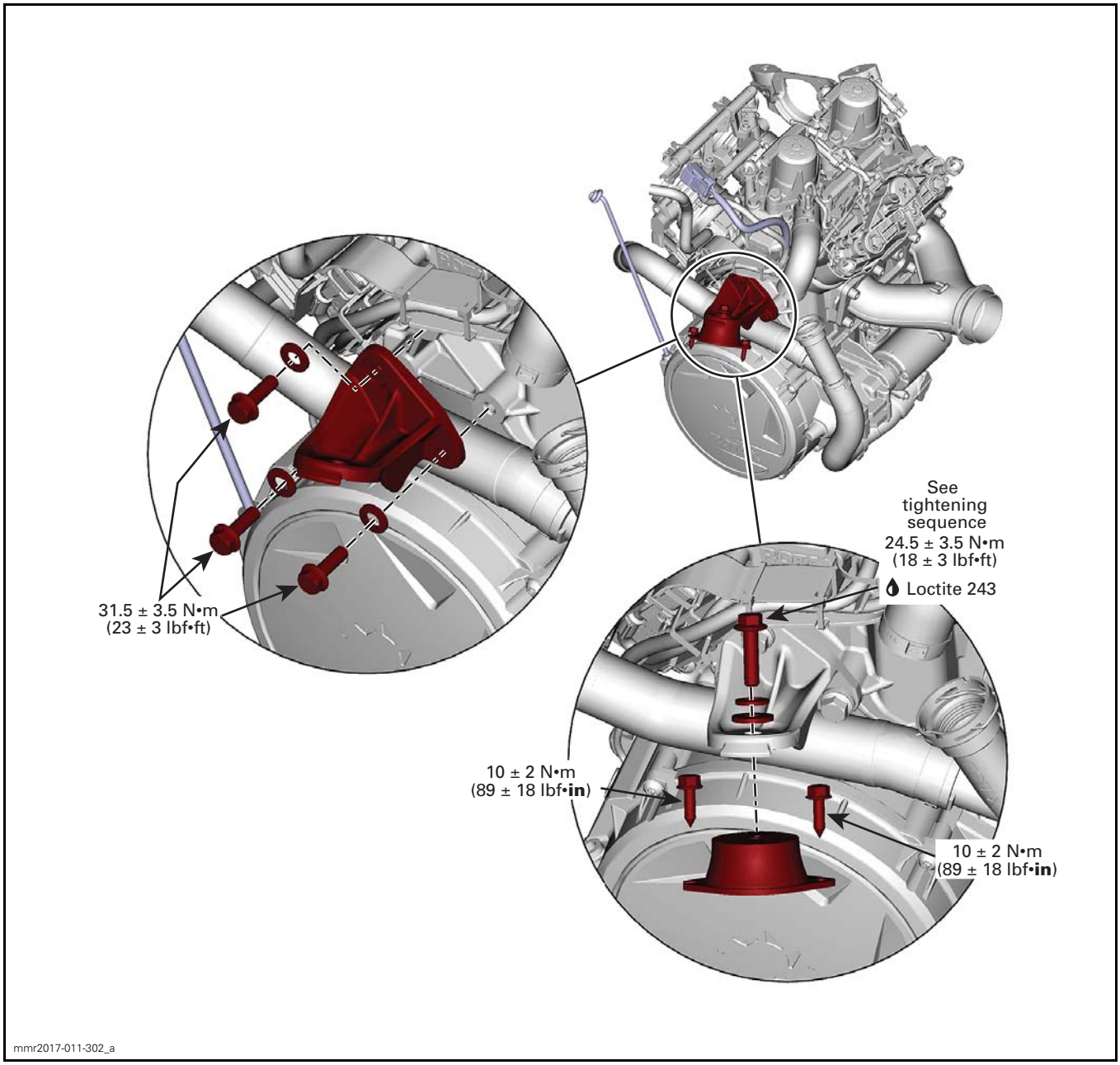

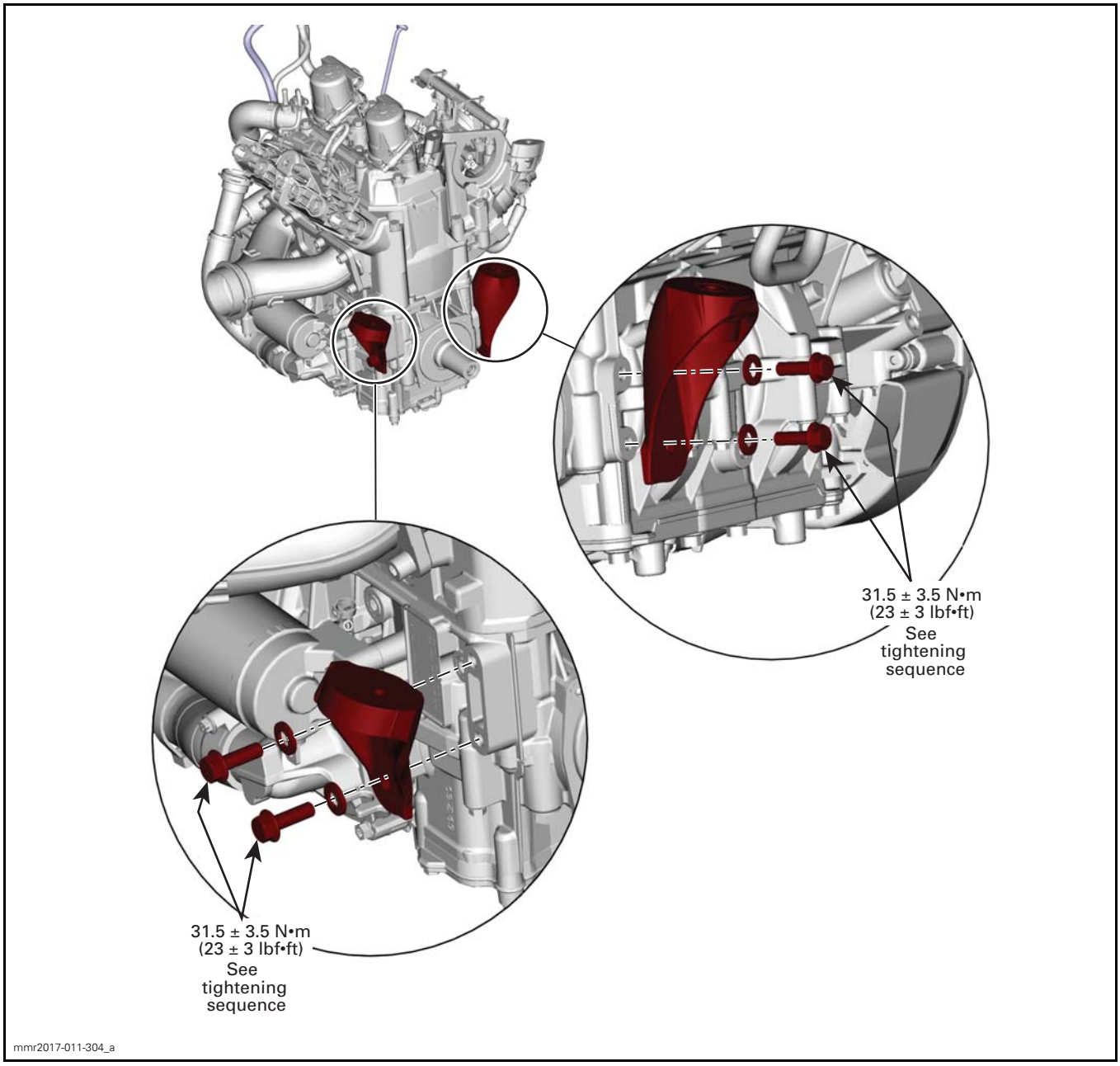
31.5 ± 3.5 N•m
(23 ± 3 lbf•ft)
See
tightening
sequence
31.5 ± 3.5 N•m
(23 ± 3 lbf•ft)
See
tightening
sequence
mmr2017-011-304_a

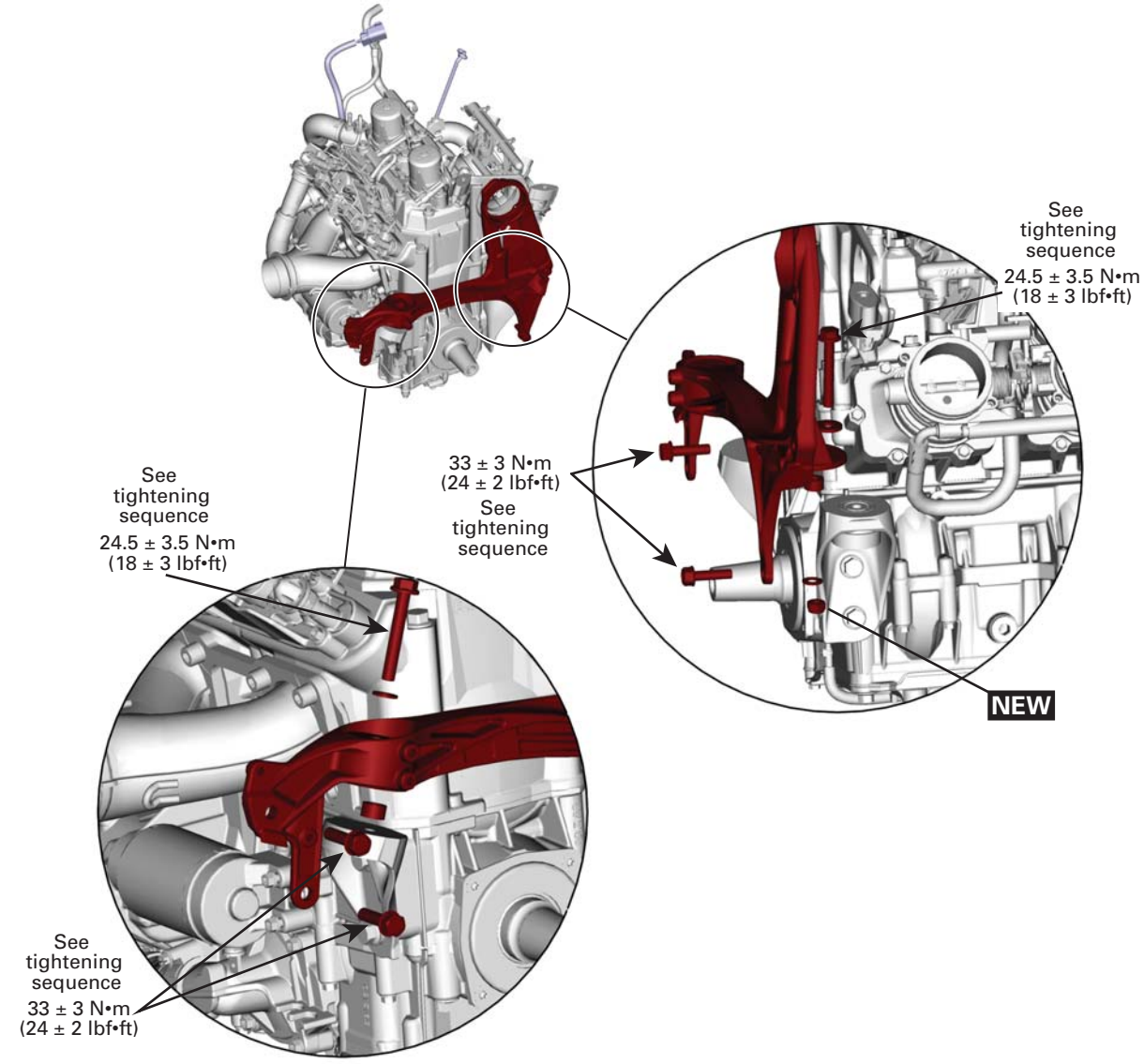


**NEW** = Component must be replaced when removed.

mmr2017-011-303_a

# GENERAL

During assembly/installation, use the torque values and service products as shown in the exploded views.

Clean threads before applying a threadlocker. Refer to *SELF-LOCKING FASTENERS* and *LOCTITE APPLICATION* at the beginning of this manual for complete procedure.

**⚠ WARNING**

**Torque wrench tightening specifications must be strictly adhered to.**
**Locking devices when removed (e.g.: locking tabs, elastic stop nuts, cotter pin, etc.) must be replaced with new ones.**

***NOTICE*** **Hoses, cables and locking ties removed during a procedure must be reinstalled as per factory standards.**

# PROCEDURES

## ENGINE

### Removing the Engine

1. Place vehicle at workstation that will have access to an engine-lifting hoist.
2. Remove fuel pressure. Refer to *ELECTRIC FUEL PUMP* in *FUEL TANK AND FUEL PUMP* subsection.
3. Disconnect the battery.

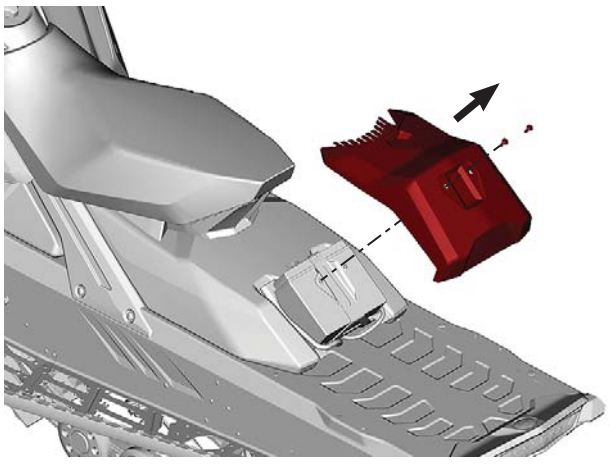
mmr2017-011-001_a

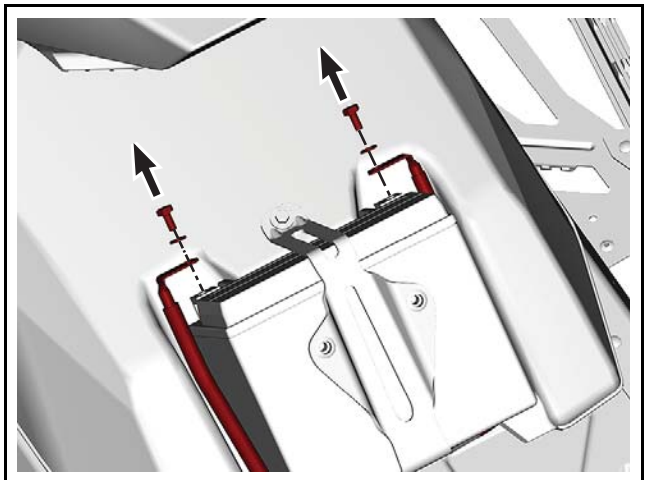
mmr2017-011-002_a

4. Remove the following parts. If required, refer to *BODY* subsection.

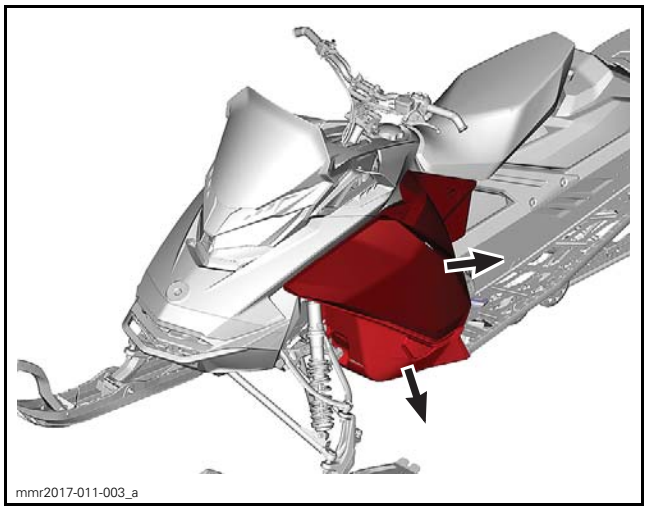
mmr2017-011-003_a

*LH SIDE PANEL AND LH BOTTOM PAN*

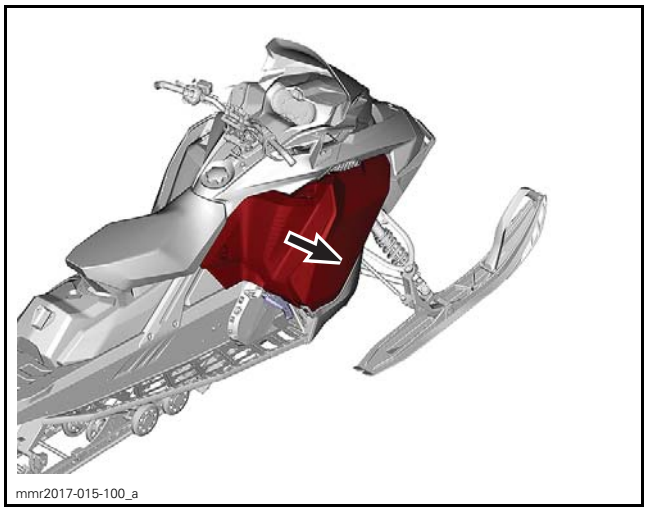
mmr2017-015-100_a

*RH SIDE PANEL*

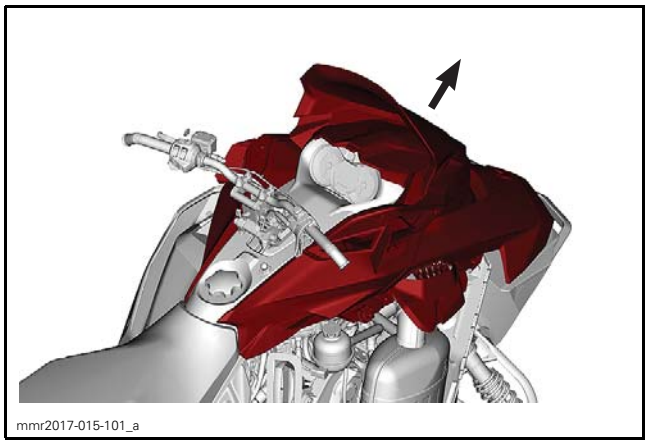


*UPPER BODY MODULE*

5. Remove the drive belt guard and acoustic panel.

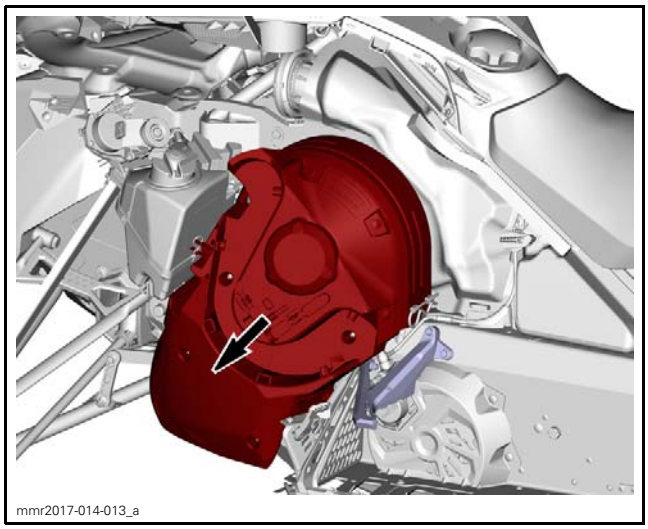


*DRIVE BELT GUARD*

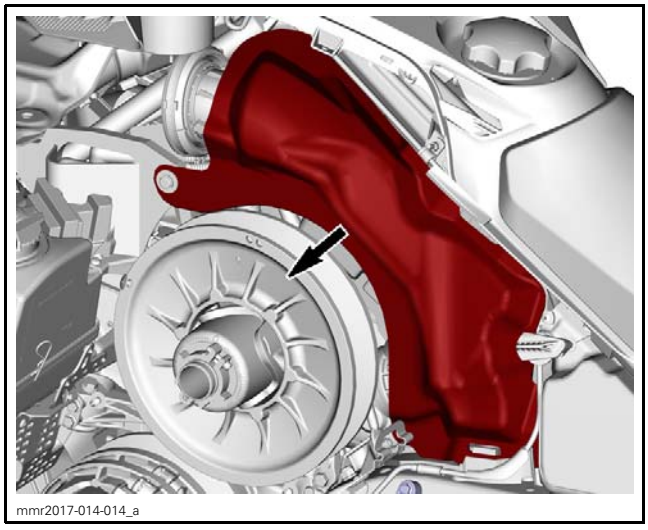


*ACOUSTIC PANEL*

6. Disconnect the BLACK wire from the starter solenoid.

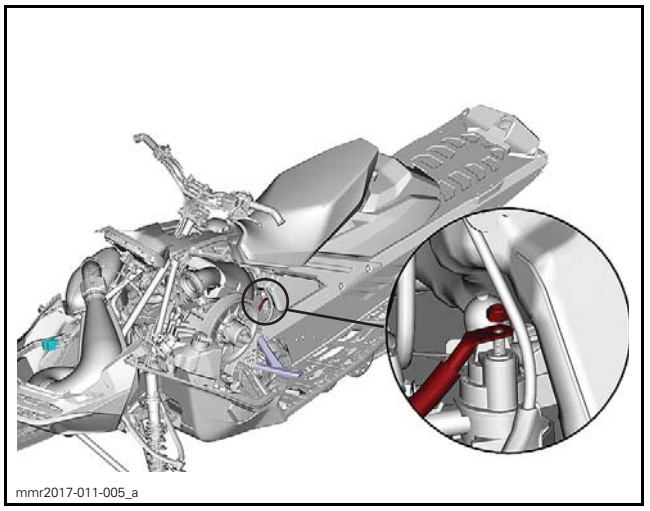


7. Remove the muffler and the tuned pipe. If required, refer to *EXHAUST SYSTEM* subsection.

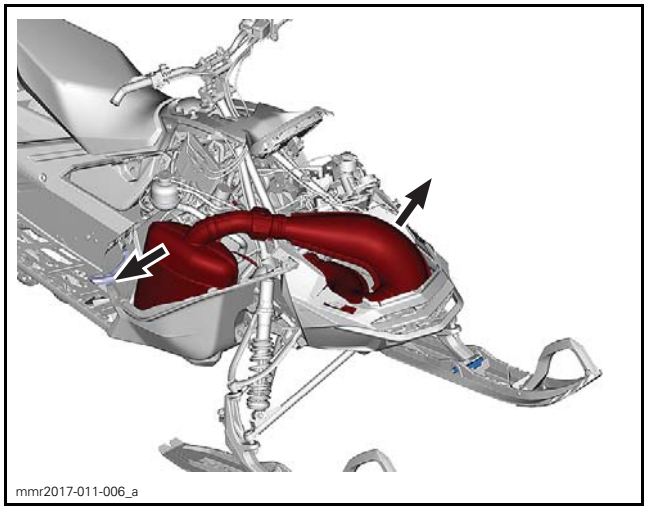


8. Place a drain pan under the front of the vehicle.
9. Drain the coolant by detaching the front cooling hose from the engine then lift the rear of the vehicle

NOTE: At the installation, replace the ear clamp by an hose clamp.

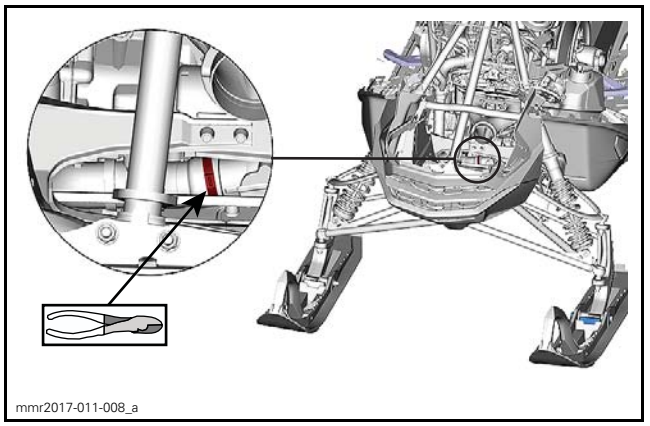

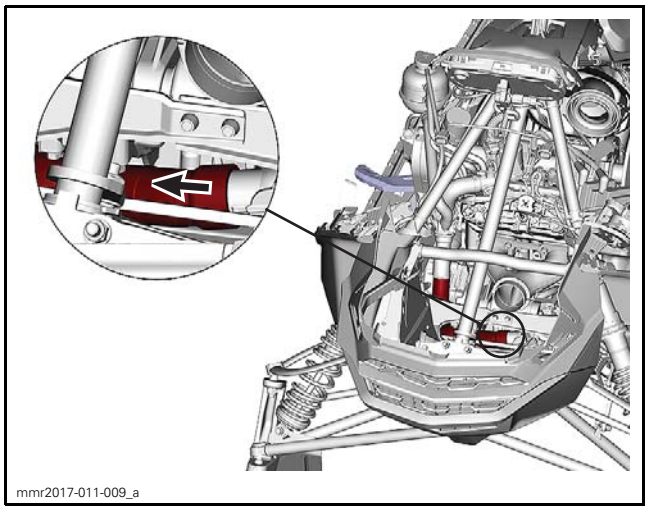
mmr2017-011-009_a

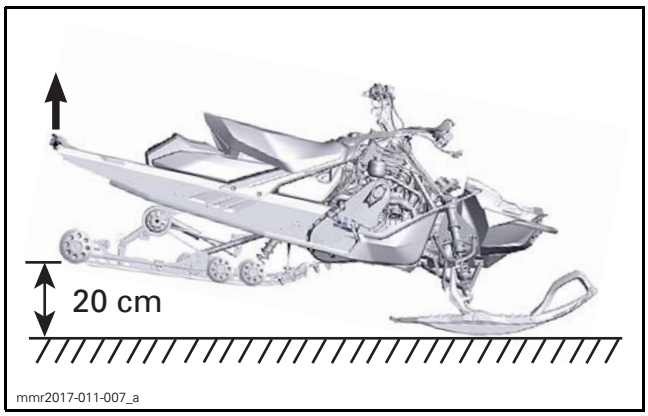

mmr2017-011-007_a

10. If equipped, remove the rewind starter handle and its housing.

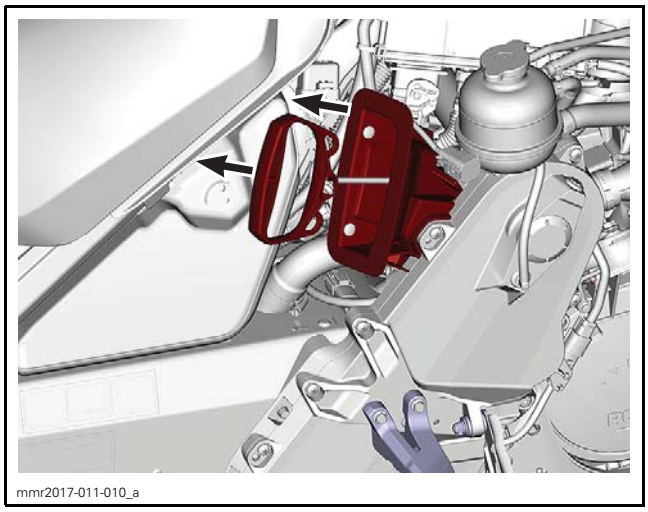
mmr2017-011-010_a

11. Unplug the inlet and outlet cooling hoses from the tunnel.

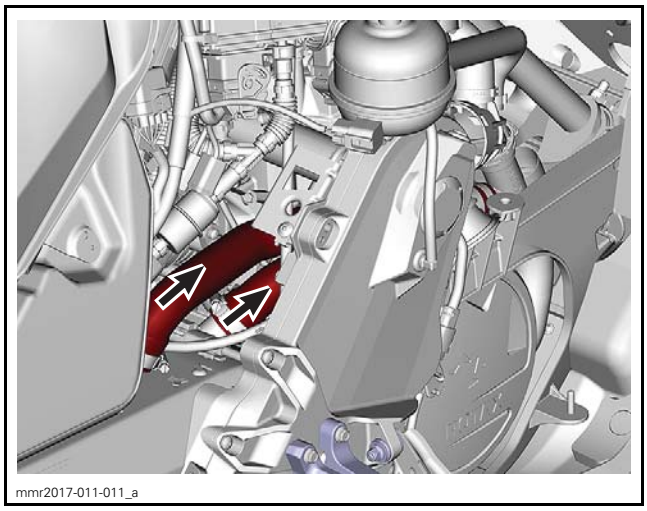
mmr2017-011-011_a

12. Detach the coolant tank from the top of the chaincase and unplug the vent hose from the tank.

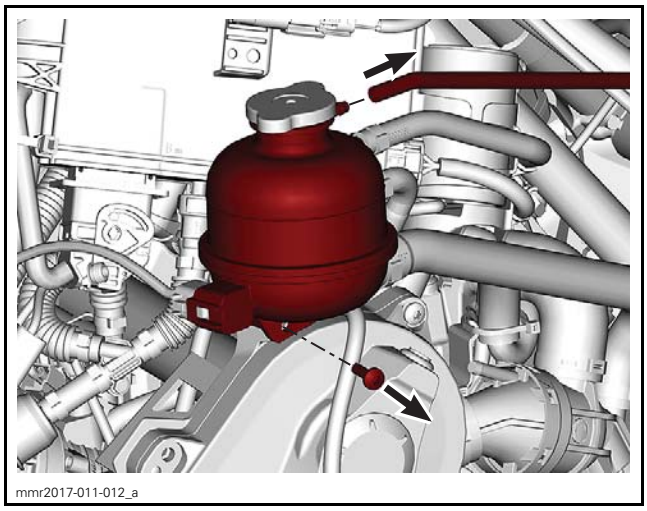
mmr2017-011-012_a

13. Disconnect the ECM connector A and the magneto connector.
14. Cut the locking tie retaining the engine harness to the capacitor support.

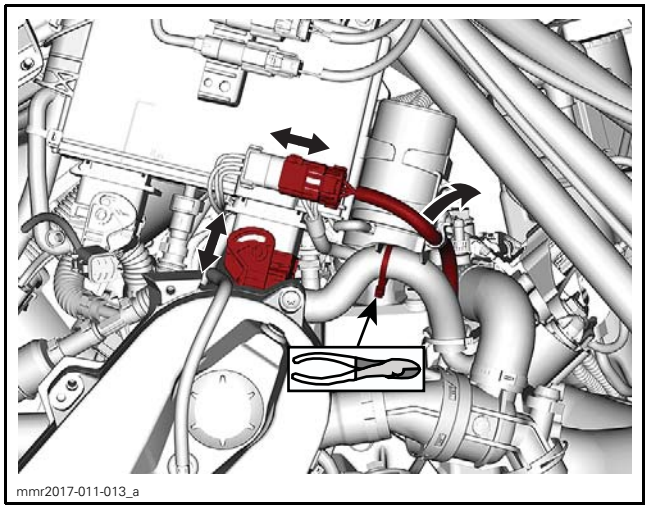
mmr2017-011-013_a

15. Unscrew fuel hoses from fuel rails.

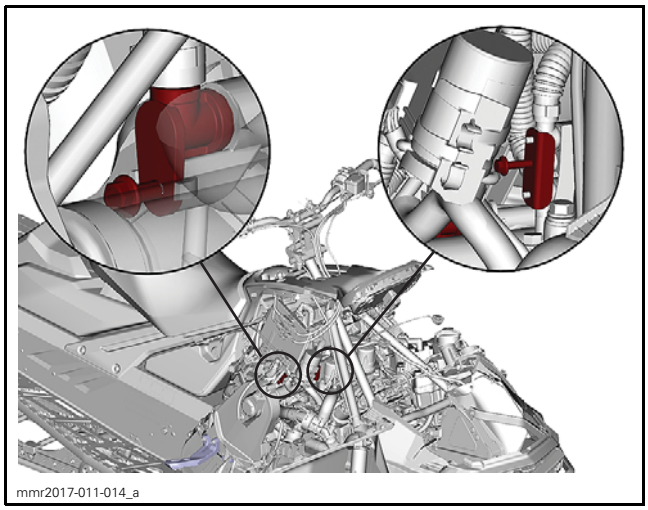
mmr2017-011-014_a

16. Apply parking brake and remove the upper gear screw and the conical spring washer.

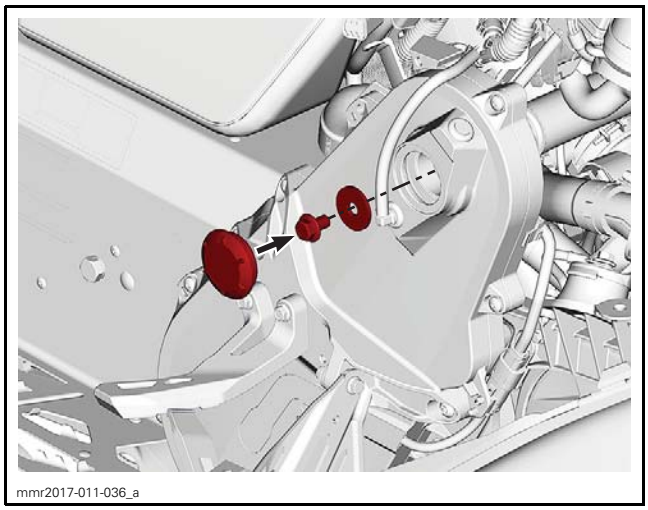
mmr2017-011-036_a

17. Install the UPPER GEAR RETAINING TOOL (P/N 529 036 110) on countershaft end.

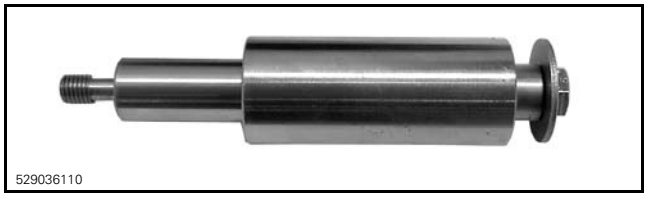
529036110

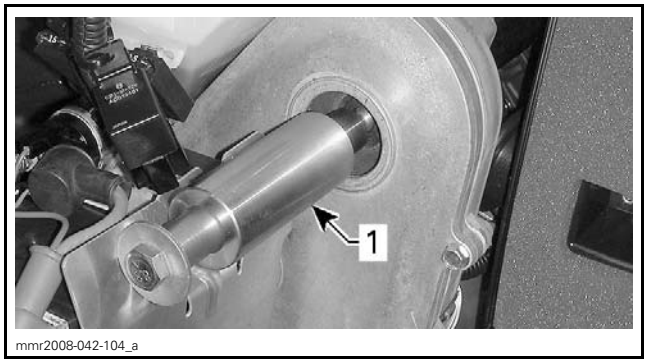

mmr2008-042-104_a

*TYPICAL*
*1. Upper gear retaining tool*

18. Remove the engine support screw.

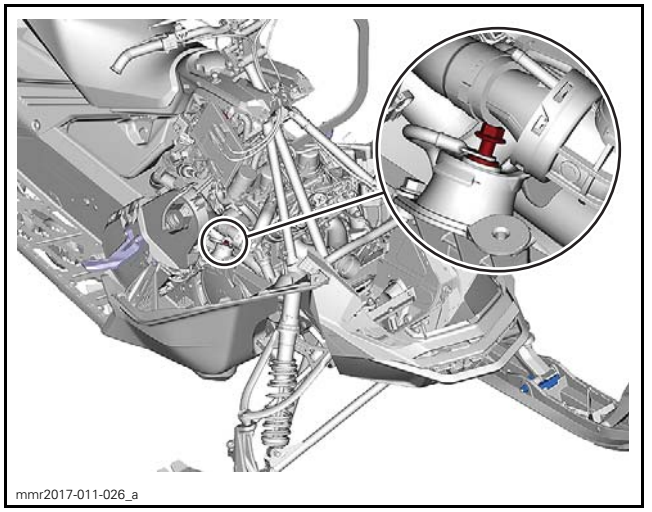
mmr2017-011-026_a

19. Unclip the fuel hose from the primary air silencer.

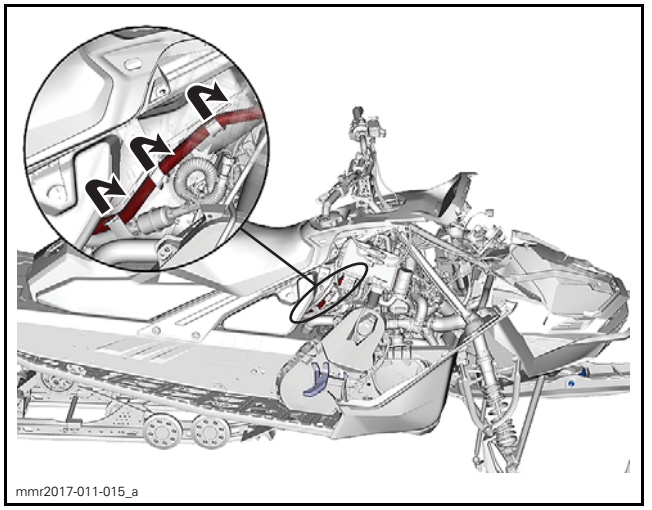
mmr2017-011-015_a

20. Remove engine cover.
    20.1 Remove the 3 screws.
    20.2 Pull on both halves of cover to remove.

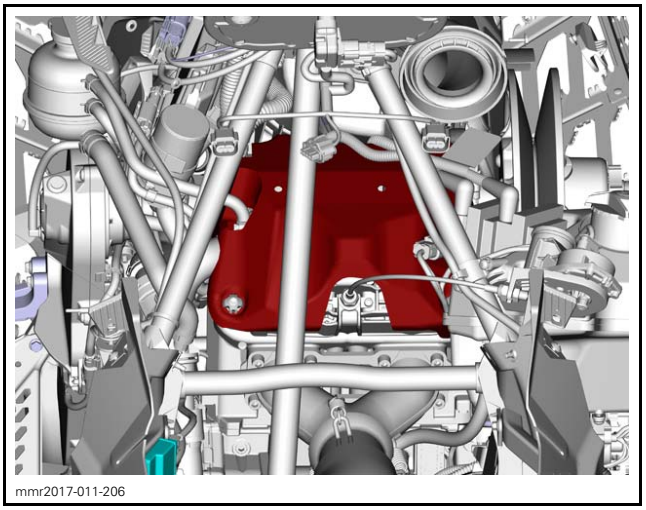
mmr2017-011-206

21. Detach the RAVE cable from the RAVE valve. Refer to *RAVE* subsection for proper procedure.

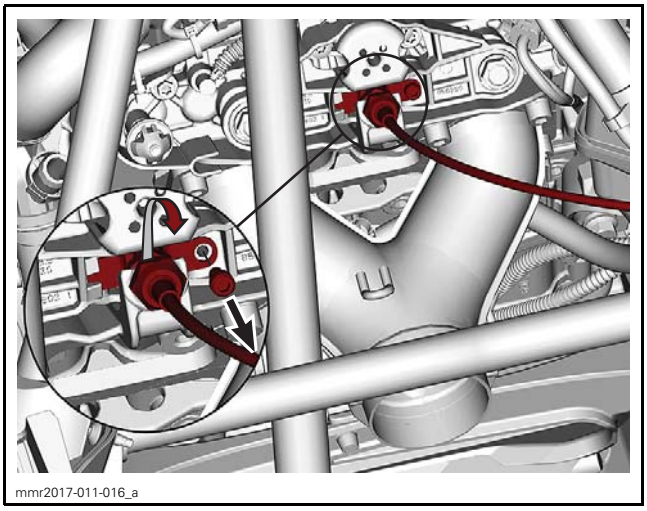
mmr2017-011-016_a

22. Unscrew the oil tank support.

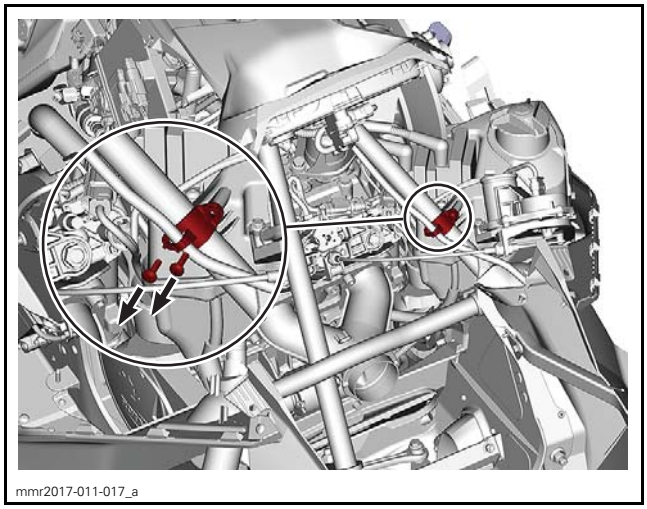
mmr2017-011-017_a

23. From underneath of the oil tank, detach both injection oil hoses from their support.

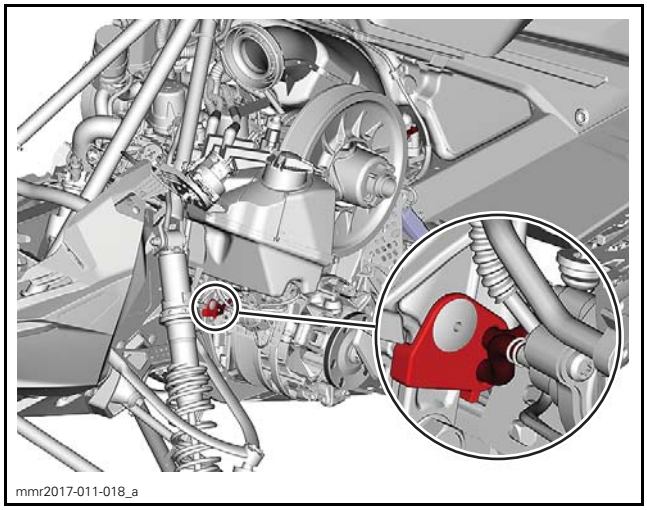
mmr2017-011-018_a

24. Detach the throttle cable from the throttle housing.

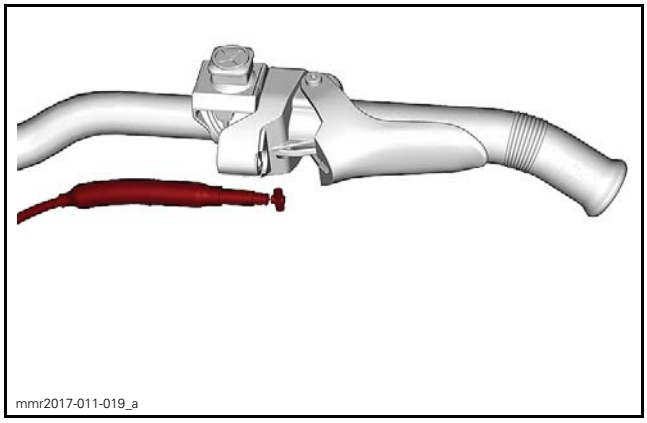
mmr2017-011-019_a

25. Remove the knock sensor from cylinder head cover.

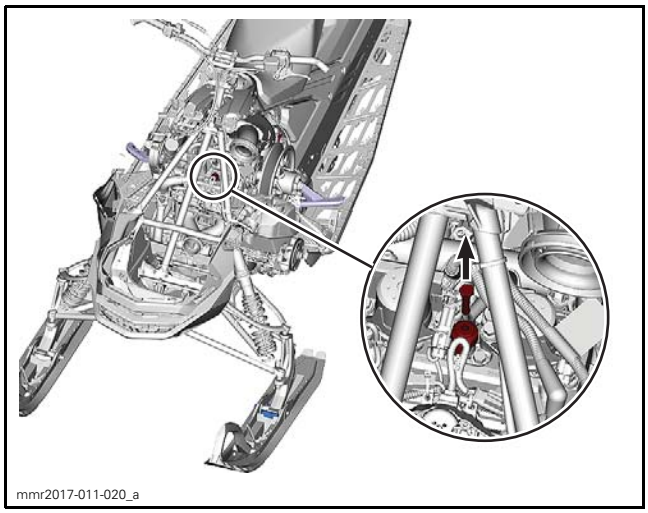


26. Install the engine lifting tool instead of knock sensor.

| REQUIRED TOOL | |
|---|---|
| ENGINE LIFTING TOOL (P/N 529 036 402) | |

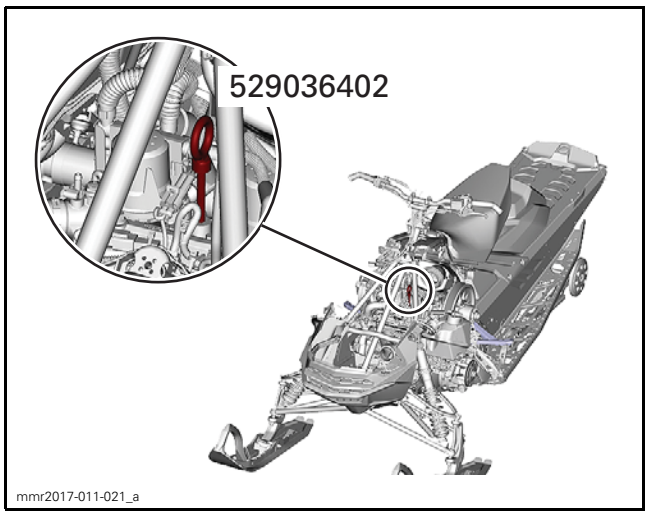


27. Install the engine lifting hook.

| REQUIRED TOOL | |
|---|---|
| ENGINE LIFTING HOOK (P/N 529 035 829) | |

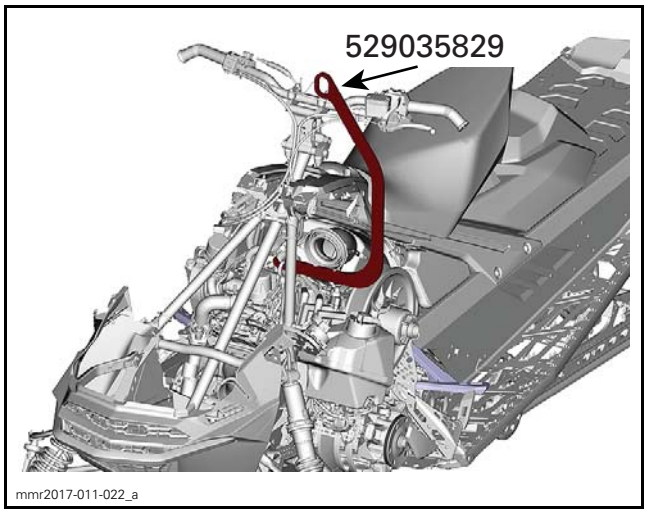


28. Remove the driven pulley. Refer to appropriate *DRIVEN PULLEY AND COUNTERSHAFT* subsection.

NOTE: If necessary, tap the upper gear retaining tool with a plastic hammer.

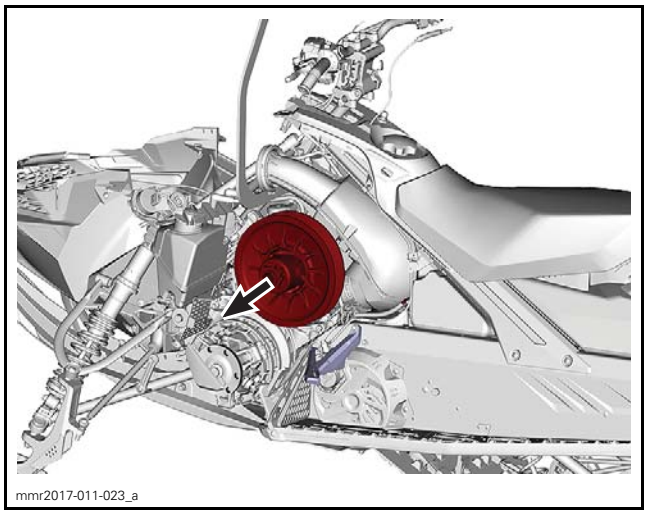


29. Unscrew countershaft from the upper gear retaining tool. **Do not** remove tool.

NOTE: While countershaft is removed from vehicle, the upper gear retaining tool maintains the drive chain and the upper gear in position inside chaincase.

30. On LH side, remove the steering brace.

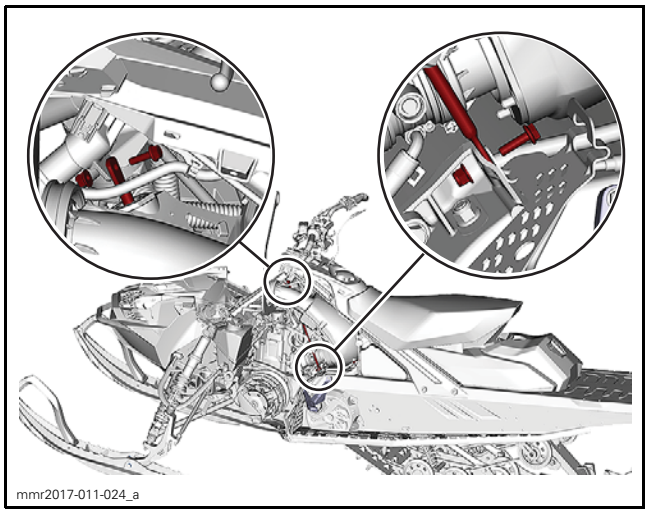
mmr2017-011-024_a

31. Remove the primary air silencer. Refer to *AIR INTAKE SYSTEM* subsection.

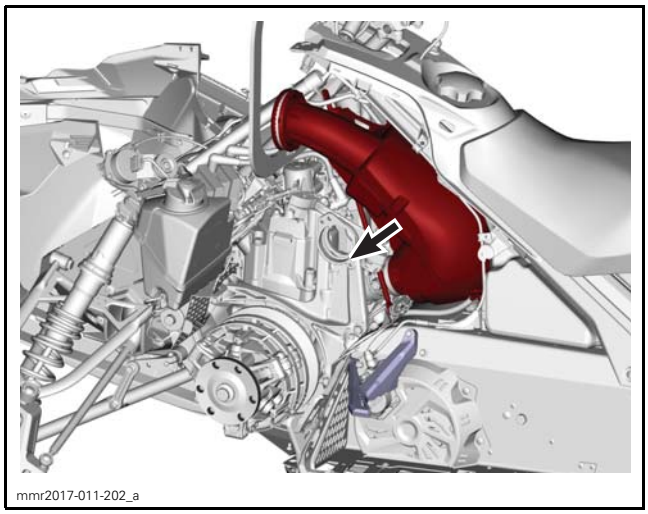
mmr2017-011-202_a

32. Remove engine support screws.

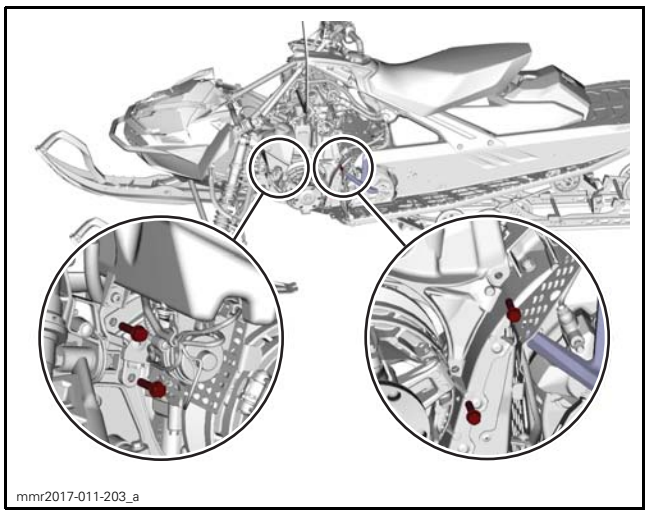
mmr2017-011-203_a

33. Lift engine and slide it out of vehicle.

## Installing the Engine

The installation is the reverse of the removal procedure. However, pay attention to the following details.

Install **NEW** self-locking fasteners (screw or nut) where required. Refer to exploded views at the beginning of this subsection.

When installing countershaft bearing support, refer to *FRAME* subsection for proper procedure.

Install and tighten engine support bolts as per the following sequence.

| TIGHTENING TORQUE | |
|---|---|
| Step 1 and Step 2 | Install the bolt loosely |
| Step 3 and Step 4 | 31.5 N•m ± 3.5 N•m (23 lbf•ft ± 3 lbf•ft) |
| Step 5 and Step 6 | 24.5 N•m ± 3.5 N•m (18 lbf•ft ± 3 lbf•ft) |

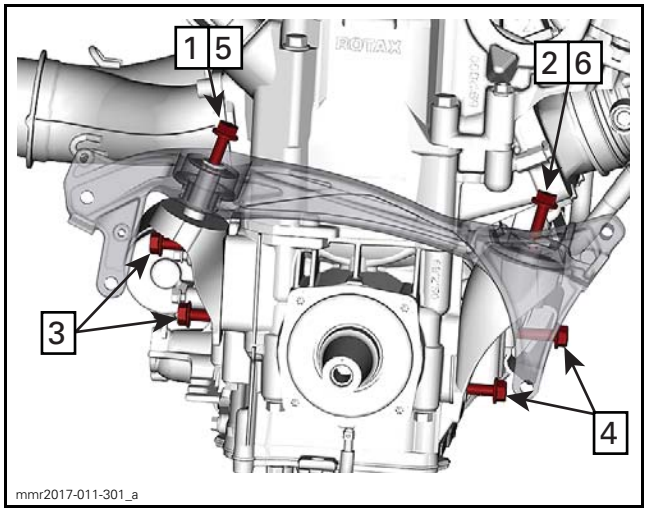

mmr2017-011-301_a

Secure the engine to the frame as per the following sequence.

**NOTE:** Snug all bolts then tighten to specification.

| TIGHTENING TORQUE | |
|---|---|
| Step 1 to Step 4 | 33 N•m ± 3 N•m (24 lbf•ft ± 2 lbf•ft) |
| Step 5 | 24.5 N•m ± 3.5 N•m (18 lbf•ft ± 3 lbf•ft) |

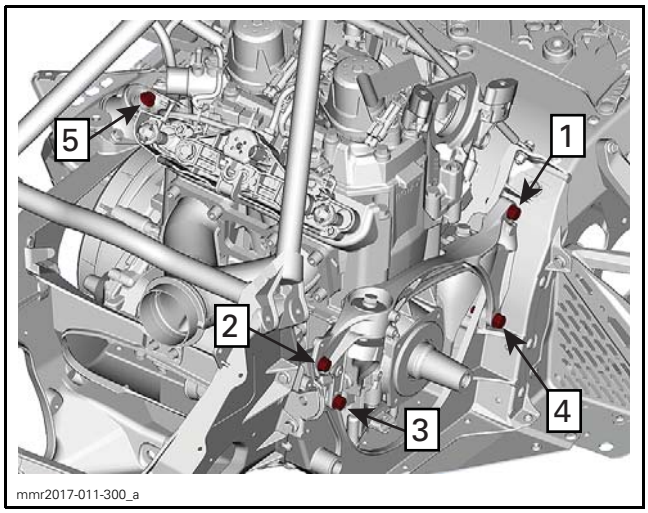

mmr2017-011-300_a

If a new engine is installed or the engine was repaired, restart the break-in procedure using BUDS2.

# ENGINE SUPPORT

## Inspecting the Engine Support

Check if engine supports are cracked, bent or damaged. Replace if necessary.

## Replacing the PTO Side Engine Support

Remove the LH bottom pan. Refer to *BODY* subsection.

Remove driven pulley. Refer to appropriate *DRIVEN PULLEY AND COUNTERSHAFT* subsection.

Remove the injection oil tank support.

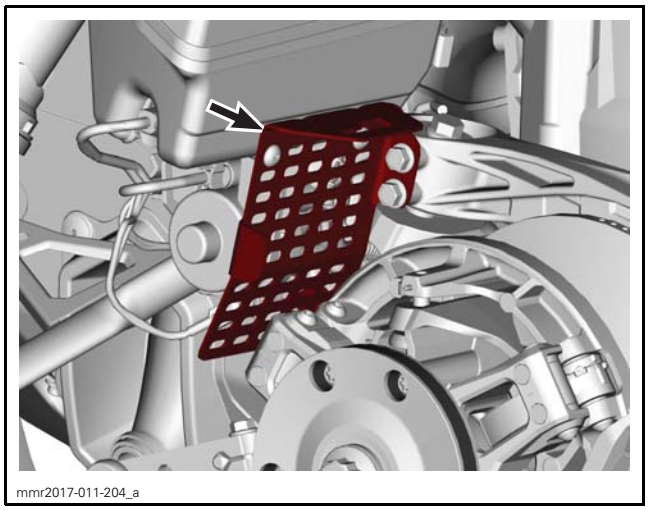
mmr2017-011-204_a

Place a piece of wood or any other appropriate tool under the engine to support it during engine support removal.

Remove screws securing engine support to rubber mount adapters.

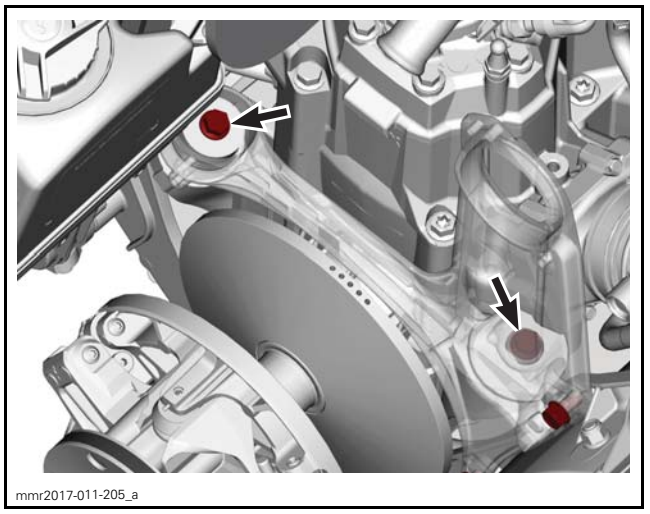
mmr2017-011-205_a

Remove engine support screws.

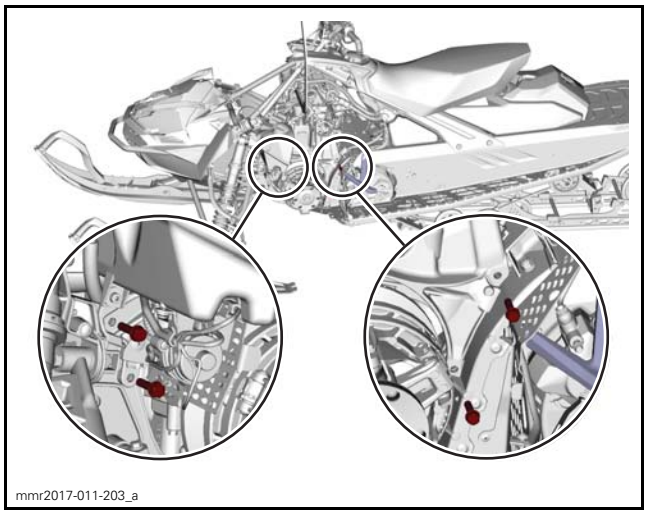
mmr2017-011-203_a

Remove engine support.

To install the engine support, reverse the removal procedure.

Tighten screws as per the specifications indicated in the exploded views.

## Replacing the MAG Side Engine Support

Remove muffler and tuned pipe. Refer to *EXHAUST SYSTEM* subsection.

Place a piece of wood or any other appropriate tool under the engine to support it during engine support removal.

Remove screw securing engine support to rubber mount adapter.

Remove screw retaining engine support to engine.

Remove engine support.

To install the engine support, reverse the removal procedure.

Position the concave washer as shown.

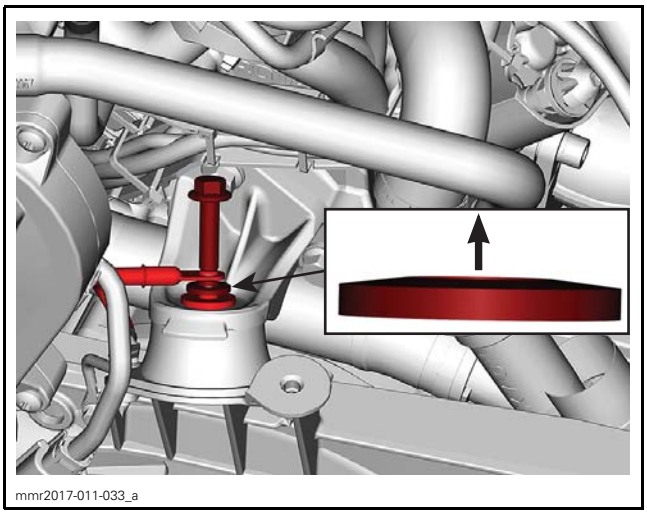


*SOME PARTS REMOVED FOR CLARITY*

Tighten screws as per the specifications indicated in the exploded views.

# ENGINE RUBBER MOUNTS

## Inspecting the Engine Rubber Mount

Check rubber mounts. Replace them if brittle, cracked or damaged.

## Replacing the PTO Side Engine Rubber Mount

Remove the PTO side engine support. See procedure in this subsection.

Using a press, extract the engine rubber mount from the engine support.

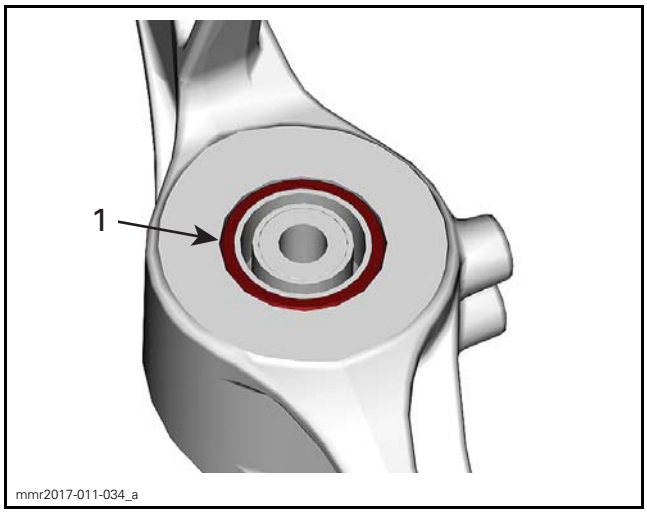


*1. Press on this ring*

Install the new engine rubber mount by pressing on the external metallic ring.

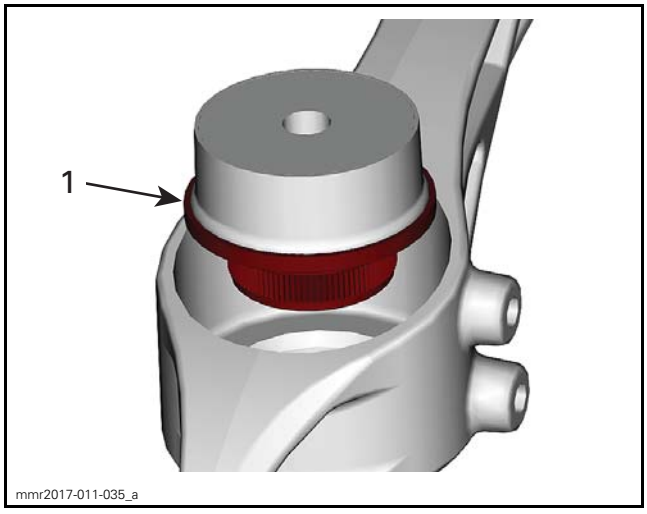


*1. Press on this metallic ring*

## Replacing the MAG Side Engine Rubber Mount

Remove muffler and tuned pipe. Refer to *EXHAUST SYSTEM* subsection.

Place a piece of wood or any other appropriate tool under the engine to support it during engine support removal.

Remove screw securing engine support to rubber mount adapter.

Remove screw retaining rubber mount adapter to frame.

Remove rubber mount adapter.

To install the rubber mount adapter, reverse the removal procedure.

Tighten screws as per the specifications indicated in the exploded views.

# ENGINE REMOVAL AND INSTALLATION (ACE AND ACE TURBO)

## SERVICE TOOLS

| Description | Part Number | Page |
|---|---|---|
| ENGINE LIFTING TOOL | 529 036 217 | 37 |
| FUEL HOSE DISCONNECT TOOL | 529 036 037 | 35 |

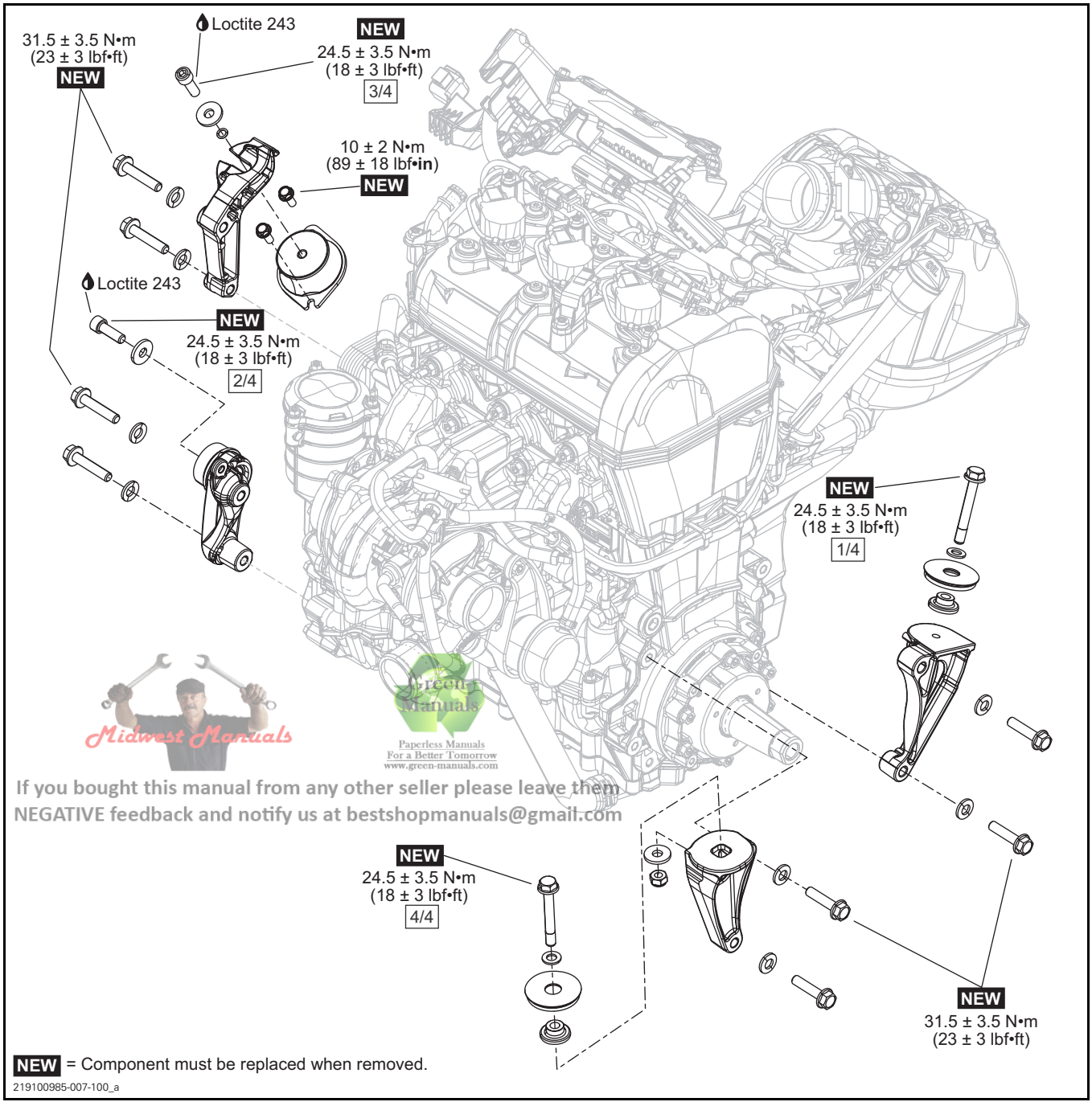


Midwest Manuals
Green Manuals
Paperless Manuals
For a Better Tomorrow
www.green-manuals.com
If you bought this manual from any other seller please leave them
NEGATIVE feedback and notify us at bestshopmanuals@gmail.com

# GENERAL

During assembly or installation, use the torque values and service products as shown in the exploded view.

Clean threads before applying a threadlocker. Refer to *SELF-LOCKING FASTENERS* and *LOCTITE APPLICATION* at the beginning of this manual for complete procedure.

**⚠ WARNING**

**Torque wrench tightening specifications must be strictly adhered to.**
**Locking devices when removed (e.g.: locking tabs, elastic stop nuts, cotter pins, etc.) must be replaced with a new ones.**

***NOTICE*** **Hoses, cables and locking ties removed during a procedure must be reinstalled as per factory standards.**

# PROCEDURES

## ENGINE

### Removing the Engine

Place vehicle on a workstation equipped with an engine-lifting hoist.

1. Remove fuel pressure. Refer to *ELECTRIC FUEL PUMP* in *FUEL TANK AND FUEL PUMP* subsection.
2. Disconnect the battery.

***NOTICE*** **Always disconnect BLACK (-) cable first, then the RED (+) cable.**

3. Refer to appropriate subsection and remove:
   – Upper body module
   – LH bottom pan
4. Drain coolant. Refer to *COOLING SYSTEM - VEHICLE COMPONENT* subsection.

#### *Without Turbocharger*

5. Remove the exhaust manifold. Refer to *EXHAUST SYSTEM* subsection.

#### *With Turbocharger*

6. Remove the Turbocharger. Refer to *TURBOCHARGER* subsection.

#### MAG Side Operations

1. Disconnect throttle body coolant return hose from coolant reservoir. Discard Oetiker clamp.

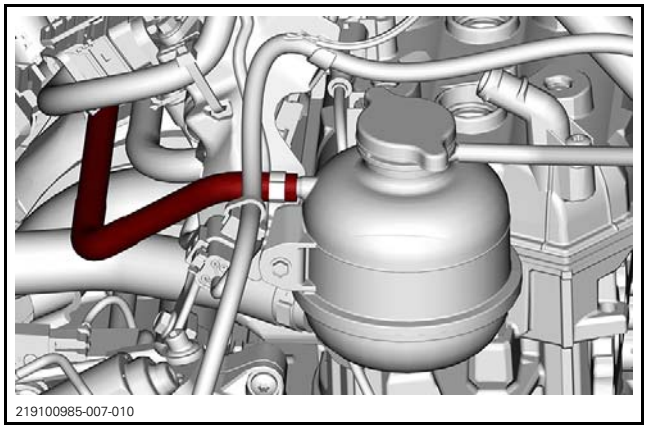
219100985-007-010

2. Disconnect outlet hose from thermostat housing.

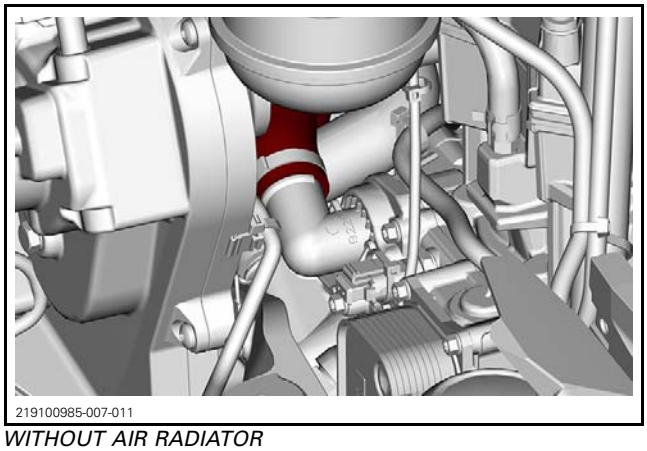
219100985-007-011

*WITHOUT AIR RADIATOR*

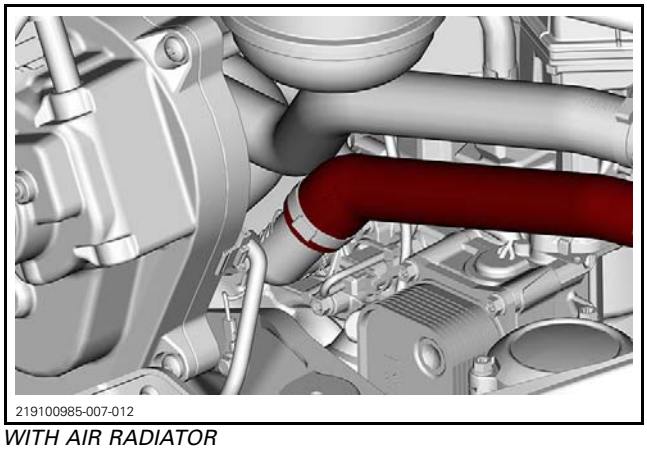
219100985-007-012

*WITH AIR RADIATOR*

3. Remove locking tie on water pump inlet hose.
4. Disconnect coolant inlet hose from water pump.

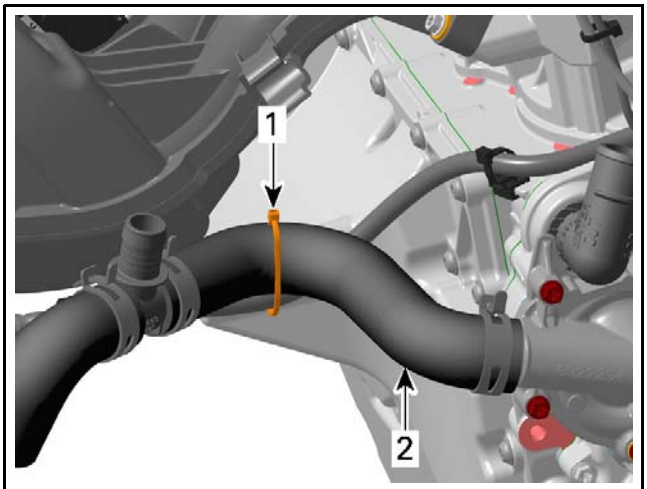


1. *Locking tie*
2. *Water pump inlet hose*

5. Remove locking tie securing magneto connector wires.

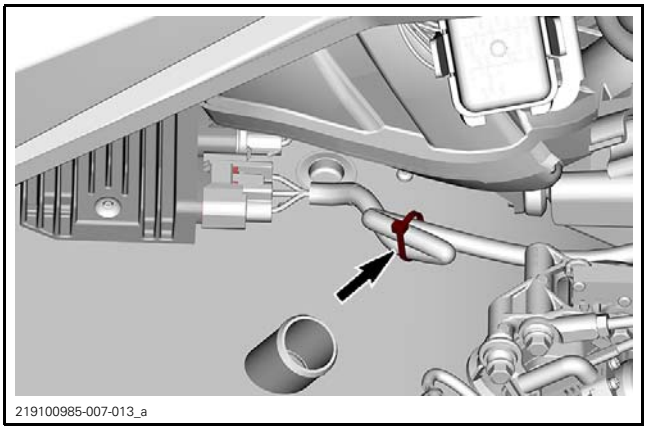


6. Remove locking ties securing harness of ECM connector A to ECM support.

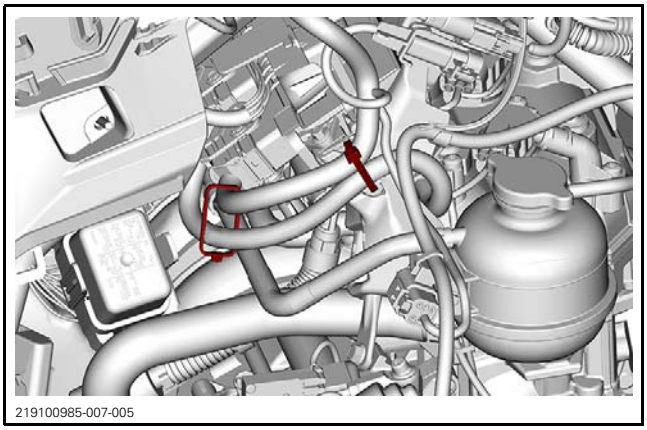


7. Disconnect ECM connector A from ECM.

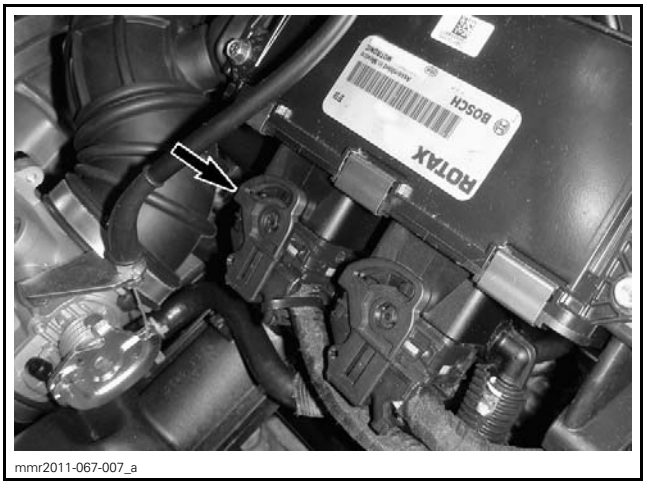


8. Disconnect engine harness connector located in front of ECM support.

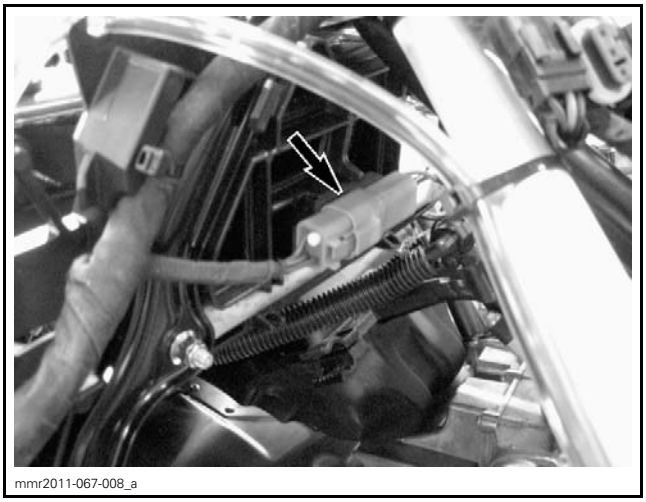


9. Disconnect fuel hose from fuel rail.

| REQUIRED TOOL | |
|---|---|
| FUEL HOSE DISCONNECT TOOL (P/N 529 036 037) |  |

NOTE: Wrap a rag around fuel hose end to catch leakage.

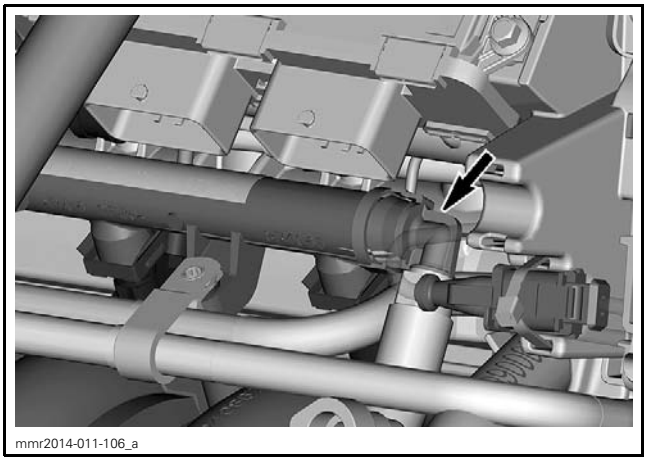
mmr2014-011-106_a

10. Disconnect blow-by hose from valve cover.

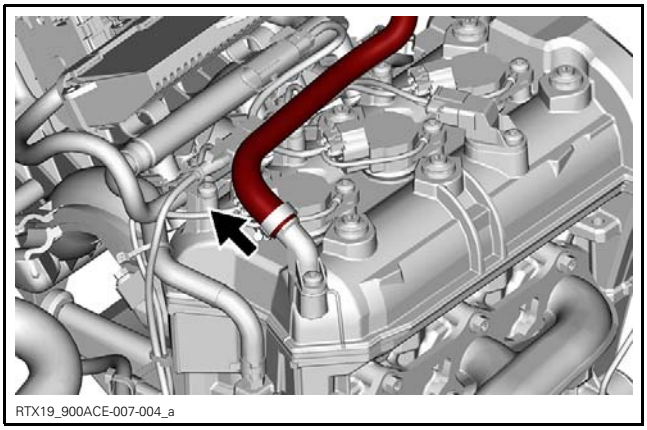
RTX19_900ACE-007-004_a

11. Remove screw securing rear MAG rubber mount to engine support.

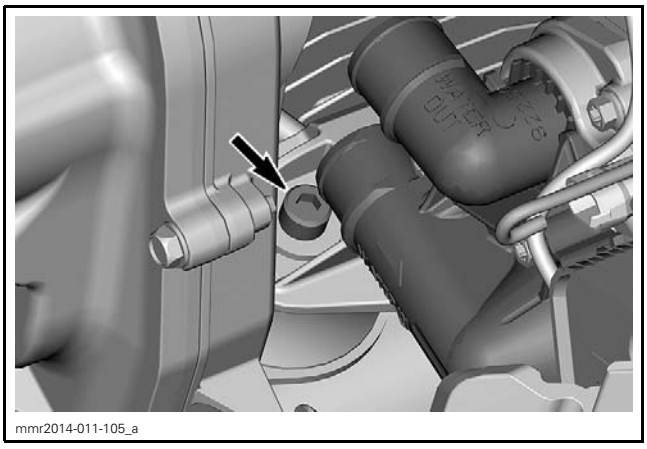
mmr2014-011-105_a

12. Remove screw securing front MAG rubber mount to engine support.

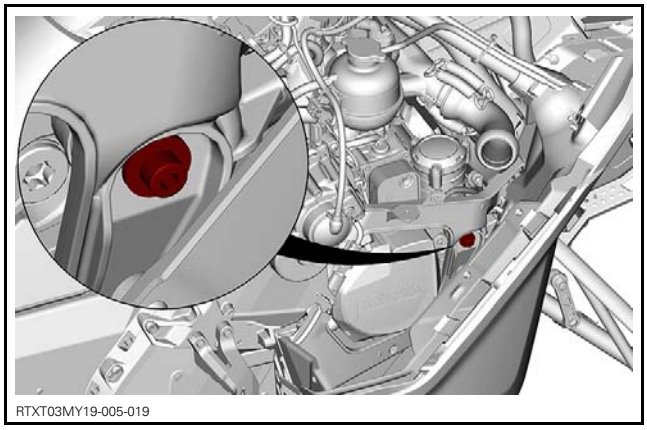
RTXT03MY19-005-019

13. Disconnect engine ground cable from frame.

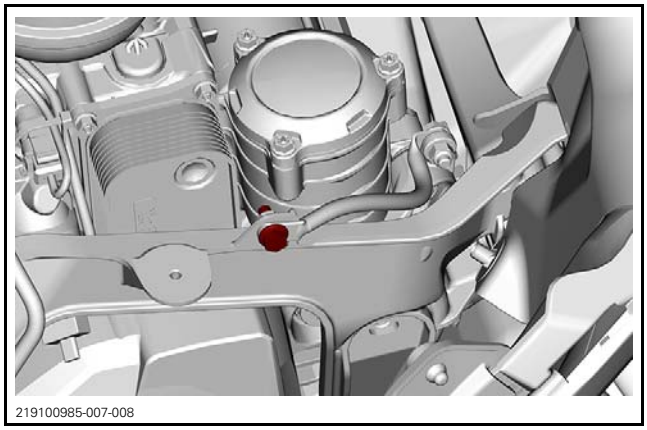
219100985-007-008

PTO Side Operations

1. Refer to *DRIVE SYSTEM* section and remove:
   - Drive pulley
   - Driven pulley and countershaft.
2. Disconnect starter cable from starter.

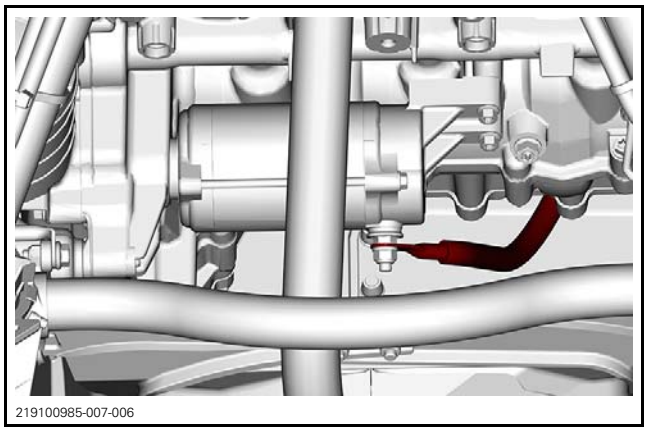
219100985-007-006

3. Remove LH side upper column support.

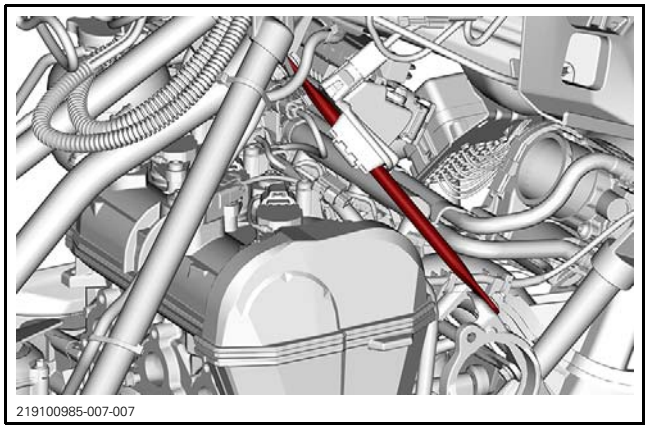
219100985-007-007

4. Install the engine lifting tool instead of exhaust manifold.

| REQUIRED TOOL | |
|---|---|
| ENGINE LIFTING TOOL (P/N 529 036 217) |  |

5. Secure lifting tool using exhaust manifold screws.
6. **Slightly** lift engine.
7. Remove countershaft bearing support. Refer to *FRAME* subsection.
8. Disconnect the magneto connector from the voltage regulator while pulling the engine out of vehicle.

### Installing the Engine

The installation is the reverse of the removal procedure. However, pay attention to the following.

Install **NEW** self-locking screws and nuts where required. Refer to exploded view at the beginning of this subsection.

Refill and bleed cooling system. Refer to *COOLING SYSTEM - VEHICLE COMPONENTS* subsection.

Properly tighten countershaft bearing support. Refer to *FRAME* subsection for tightening sequence.

Tighten engine rubber mount screws to specification. Refer to the exploded view for tightening torque and sequence.

## ENGINE SUPPORTS

### Engine Support Inspection

Check if engine supports are cracked, bent or damaged. Replace if necessary.

### Replacing the Front Engine Support (PTO Side)

1. Remove body parts and components as required to access to the engine support.
2. Remove and discard bolt securing rubber mount to engine support.

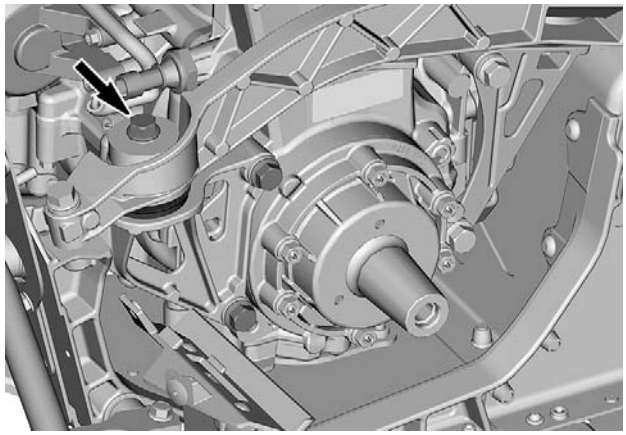
mmr2014-011-110_a

*SOME PARTS REMOVED FOR CLARITY PURPOSE*

3. Remove and discard screws securing engine to engine support.

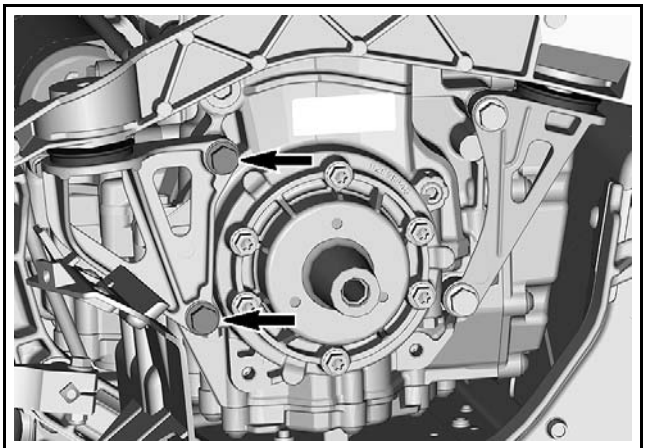
mmr2014-011-111_a

*SOME PARTS REMOVED FOR CLARITY PURPOSE*

4. Replace engine support.
5. Install conical washer as per following illustrations.

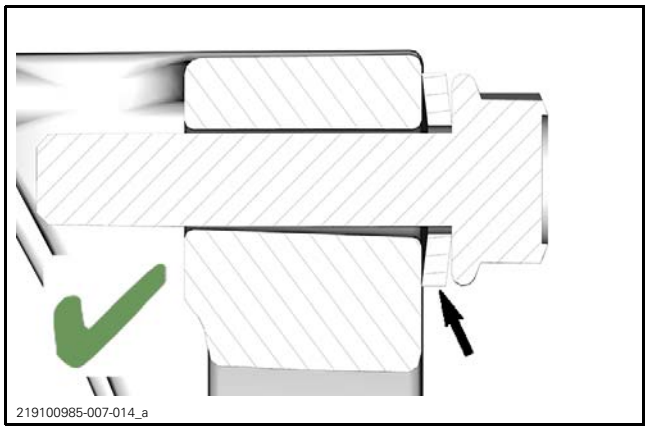


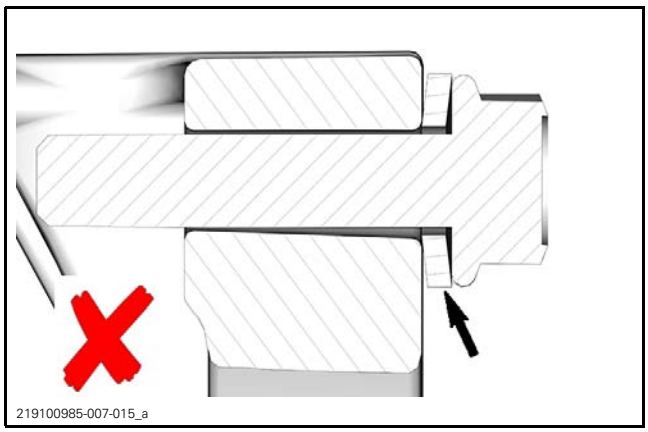


6. Install NEW screws to secure engine support on engine.
7. Tighten engine support screws to specification.

| TIGHTENING TORQUE | |
|---|---|
| Engine support screws | 31.5 N•m ± 3.5 N•m (23 lbf•ft ± 3 lbf•ft) |

8. Install NEW bolt to secure engine rubber mount on engine support.
9. Tighten engine rubber mount screw to specification.

| TIGHTENING TORQUE | |
|---|---|
| Engine rubber mount screws (M8) | 24.5 N•m ± 3.5 N•m (18 lbf•ft ± 3 lbf•ft) |

NOTE: It is normal that a gap (4 mm (5/32 in)) is visible between engine stopper and countershaft bearing support. This gap will allow engine to move and reduce vibration.

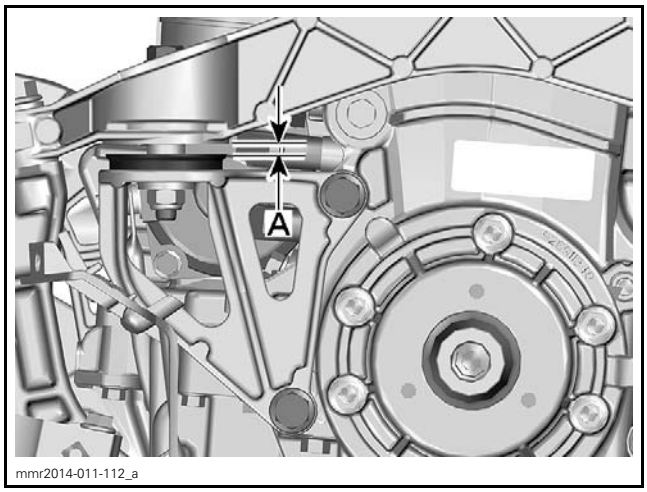


*A. Normal gap*

10. Install remaining parts.

### Replacing the Rear Engine Support (PTO Side)

To replace rear engine support, refer to *REPLACING THE FRONT ENGINE SUPPORT (PTO SIDE)*.

### Replacing the Front Engine Support (MAG Side)

To replace the front engine support, move the engine 25 mm (1 in)towards LH side. Refer to *REPLACING THE THERMOSTAT* procedure in the *COOLING SYSTEM - ENGINE COMPONENTS* subsection.

For support installation, refer to *REPLACING THE FRONT ENGINE SUPPORT (PTO SIDE)*.

### Replacing the Rear Engine Support (MAG Side)

To replace rear engine support, remove the engine. Refer to procedure in this subsection.

For support installation, refer to *REPLACING THE FRONT ENGINE SUPPORT (PTO SIDE)*.

## ENGINE RUBBER MOUNTS

### Engine Rubber Mount Inspection

Check rubber mounts. Replace them if brittle, cracked or damaged.

### Replacing the Front and Rear Engine Rubber Mount (PTO Side)

1. Remove countershaft bearing support. Refer to *FRAME* subsection.
2. Replace engine rubber mount.
3. Install countershaft bearing support. Refer to *FRAME* subsection.

## Replacing the Front Engine Rubber Mount (MAG Side)

The front engine support on MAG side must be replaced with the rubber mount. Refer to *REPLACING THE FRONT ENGINE SUPPORT (MAG SIDE)*.

## Replacing the Rear Engine Rubber Mount (MAG Side)

1. Remove the engine. Refer to procedure in this subsection.
2. Remove and discard screws securing rubber mount to frame.

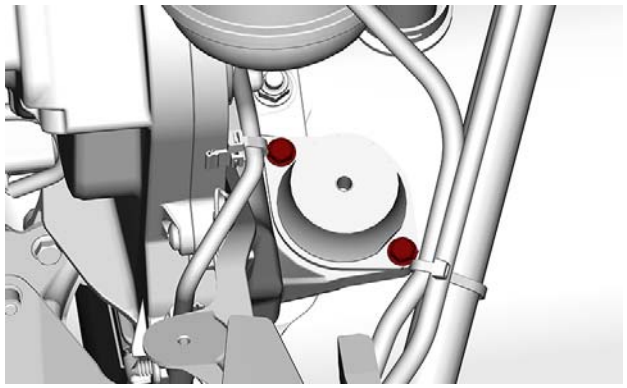
219100985-007-009

3. Replace engine rubber mount.
4. Install NEW screws to secure engine rubber mount.
5. Tighten engine rubber mount screws to specification.

| TIGHTENING TORQUE | |
|---|---|
| Engine rubber mount screws (M8) | 24.5 N•m ± 3.5 N•m (18 lbf•ft ± 3 lbf•ft) |
| Engine rubber mount screws (M6) | 10 N•m ± 2 N•m (89 lbf•**in** ± 18 lbf•**in**) |

6. Install remaining parts.

# AIR INTAKE SYSTEM (EFI AND E-TEC)

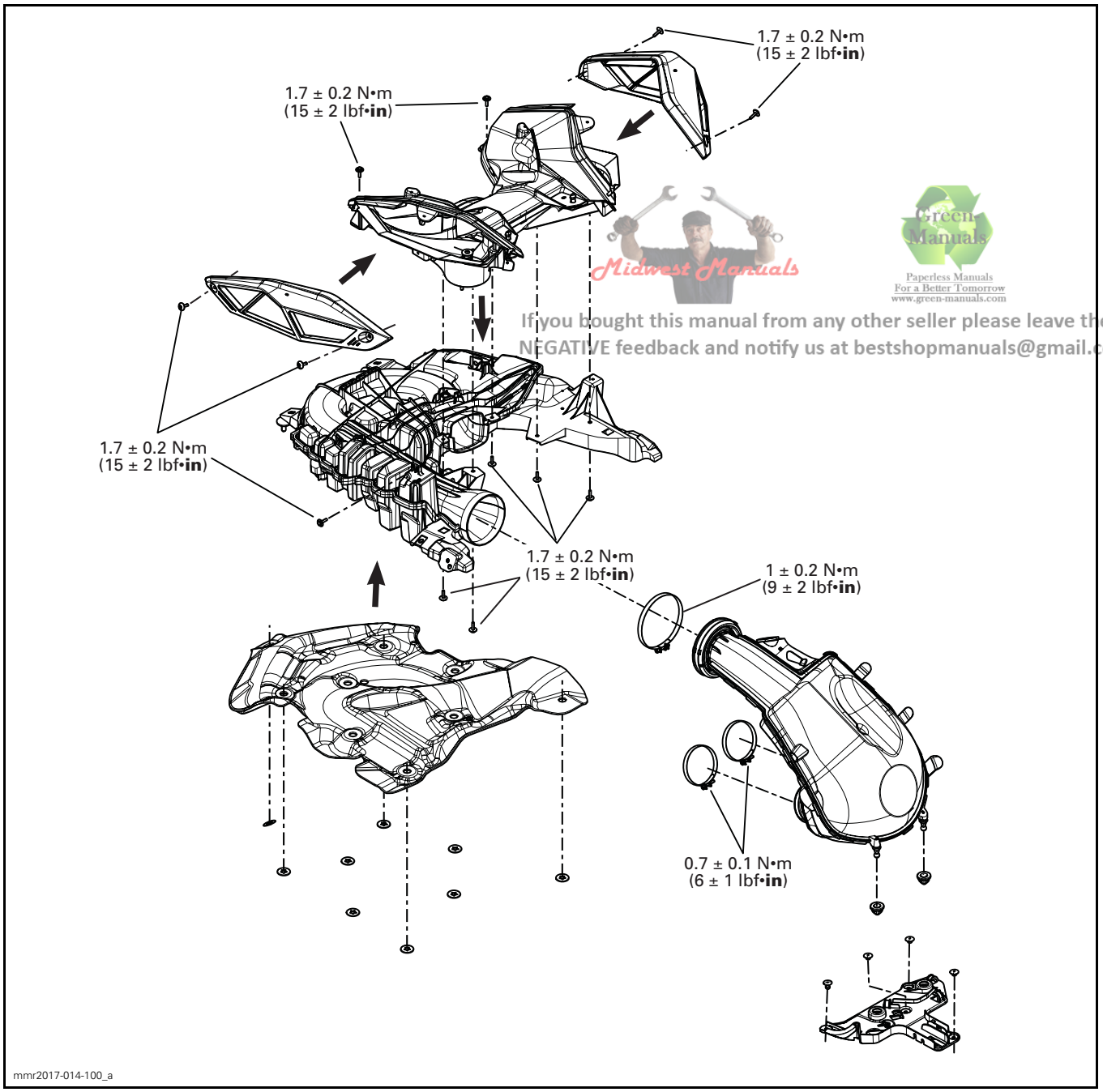


Midwest Manuals
Green Manuals
Paperless Manuals
For a Better Tomorrow
www.green-manuals.com
If you bought this manual from any other seller please leave them
NEGATIVE feedback and notify us at bestshopmanuals@gmail.com

# GENERAL

**⚠ WARNING**

Torque wrench tightening specifications must be strictly adhered to.
Locking devices must be replaced with a new ones when removed (e.g.: locking tabs, elastic stop nuts, cotter pins, etc.).

***NOTICE*** Hoses, cables and locking ties removed during a procedure must be reinstalled as per factory standards.

# PROCEDURES

## AIR FILTER (MESH)

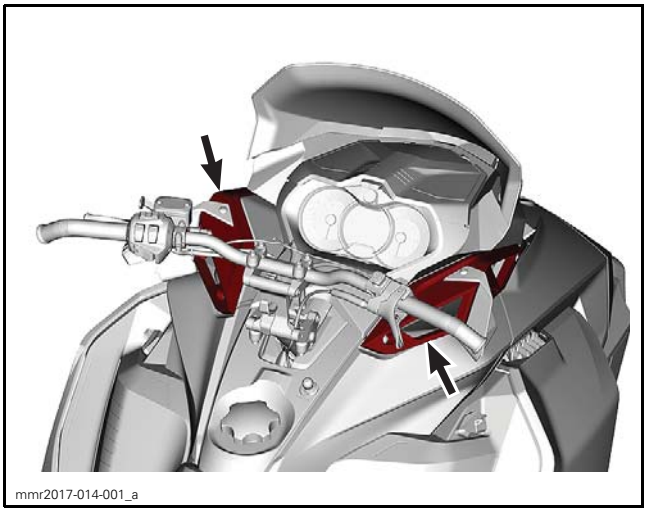

mmr2017-014-001_a

The same procedure applies for RH and LH side. Only one side is described in this procedure.

### Removing the Air Filter

Remove screws from mesh filter housing.

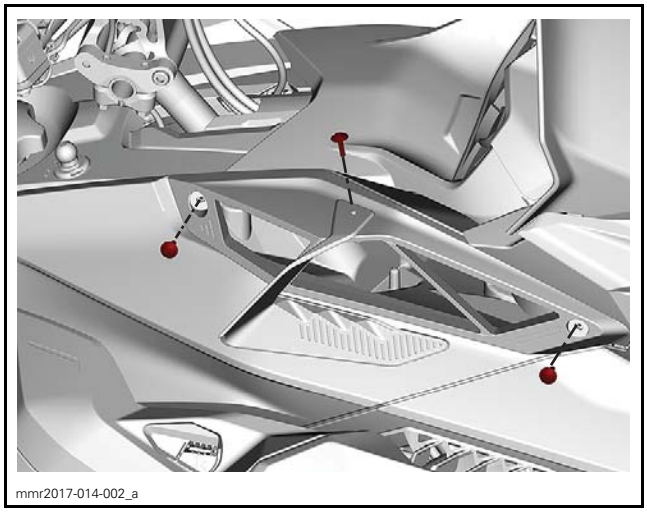

mmr2017-014-002_a

On some models, remove the air deflector.

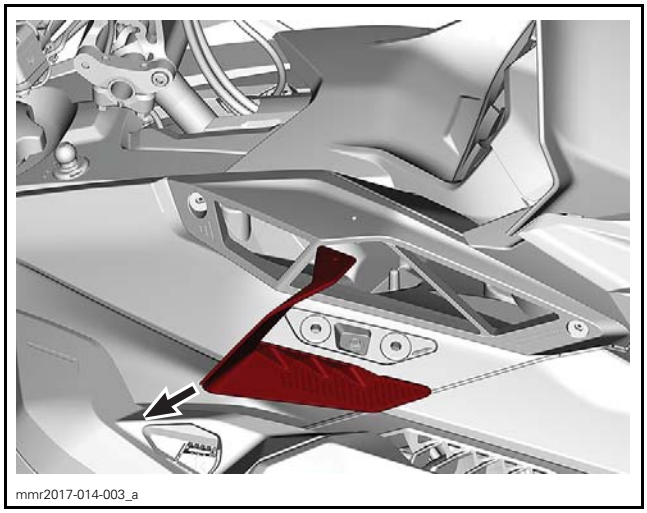

mmr2017-014-003_a

Remove the mesh filter housing from the upper body module.

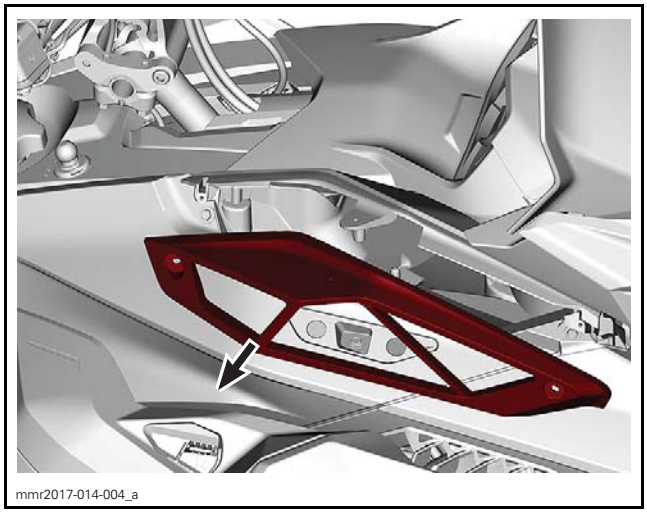

mmr2017-014-004_a

### Cleaning the Air Filter

Clean with fresh water and mild soap.

Replace air filter if required.

NOTE: If the filter is very dirty, clean the interior of secondary air intake silencer at the same time.

### Installing the Air Filter

The installation is the reverse of the removal procedure.

## PRIMARY AIR INTAKE SILENCER

### Removing the Primary Air Intake Silencer

1. Remove the following parts. If required, refer to *BODY* subsection.

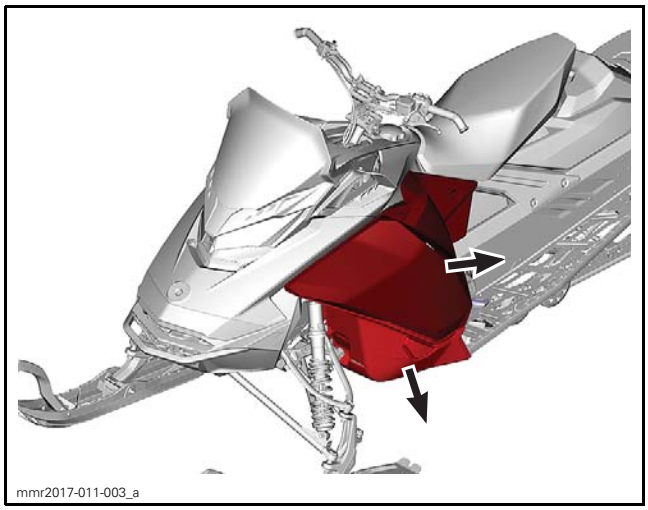


*LH SIDE PANEL AND LH BOTTOM PAN*

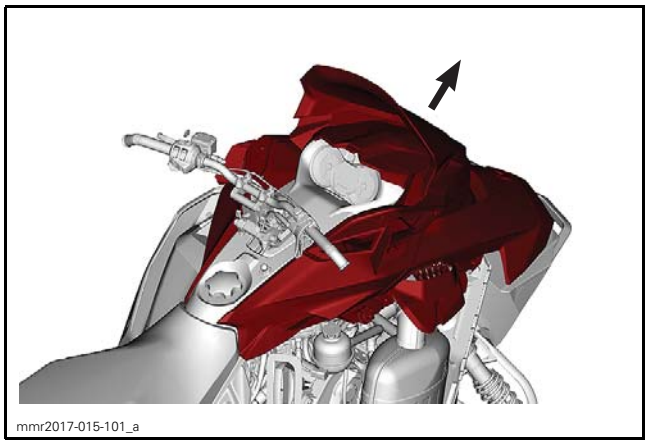


*UPPER BODY MODULE*

2. Remove the drive belt guard and acoustic panels.

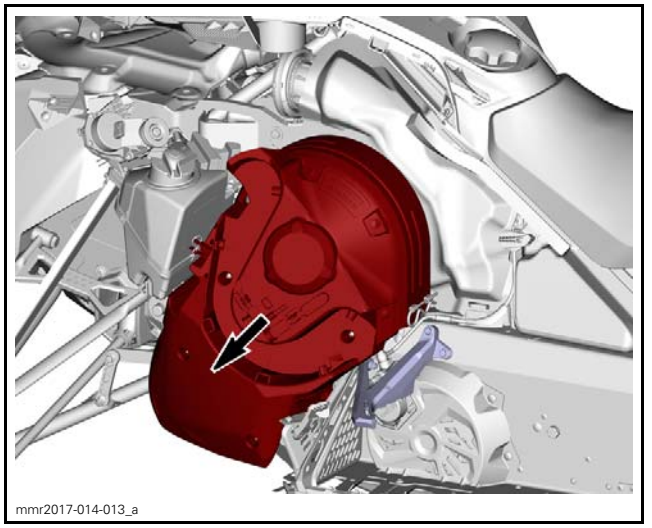


*REMOVE DRIVE BELT GUARD*

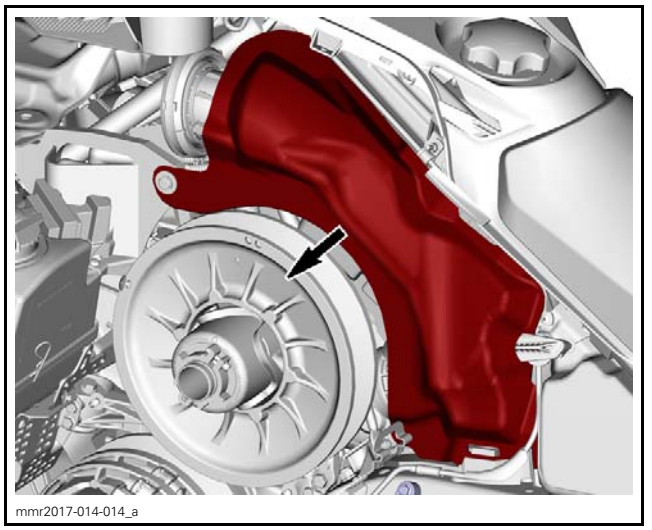


*REMOVE ACOUSTIC PANEL*

3. Remove the driven pulley. Refer to appropriate *DRIVEN PULLEY AND COUNTERSHAFT* subsection.

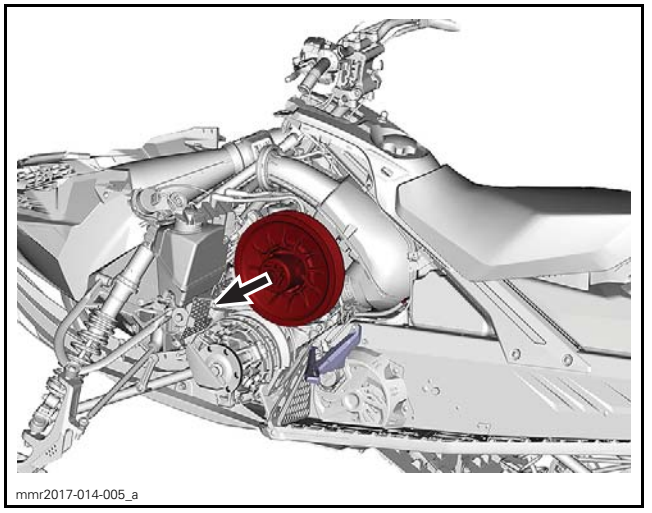


4. On LH side, remove the steering brace.

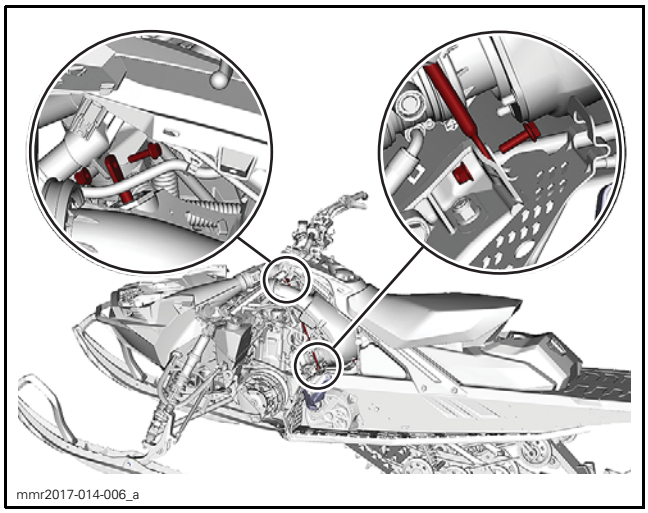
mmr2017-014-006_a

5. Remove the drive belt guard support.

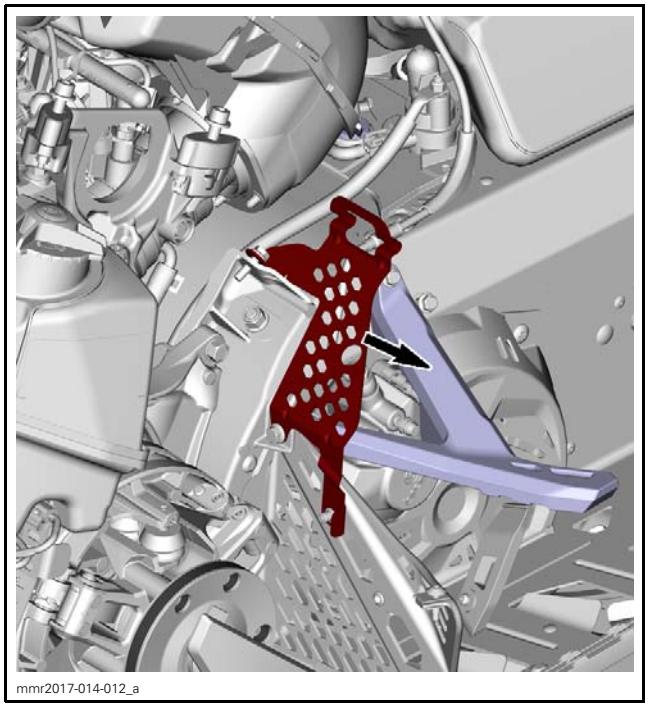
mmr2017-014-012_a

6. Unclip the fuel hose from the primary air silencer.

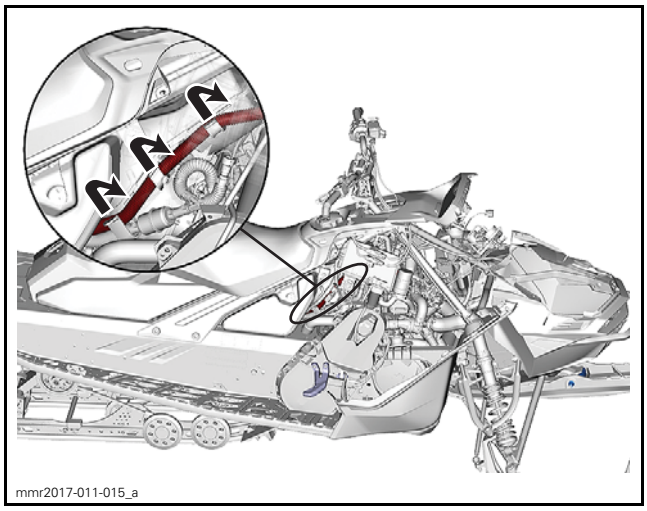
mmr2017-011-015_a

7. Remove the primary air silencer.
   - 7.1 Loosen clamps securing primary air silencer to intake adapters.
   - 7.2 Carefully pull out the primary air intake silencer with the steering brace.

**NOTICE** Make sure not touching the secondary injectors or their harnesses when removing the primary air intake silencer .

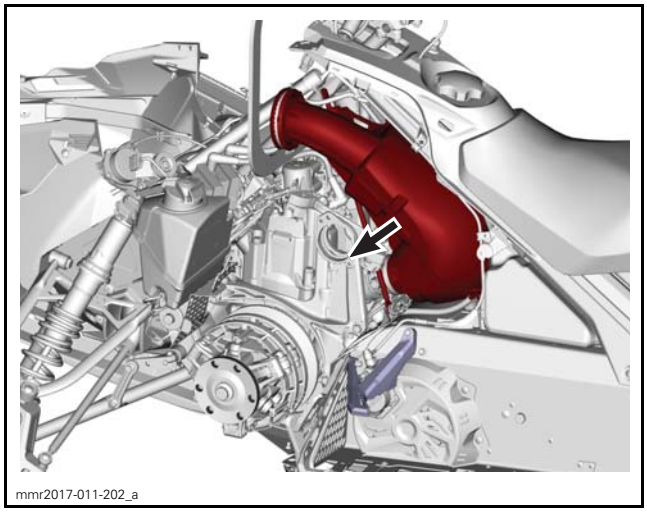
mmr2017-011-202_a

## Installing the Primary Air Intake Silencer

The installation is the reverse of the removal procedure. However, pay attention to the following.

Make sure primary air intake is properly insert in the intake adapters before applying the tightening torque.

# SECONDARY AIR INTAKE SILENCER

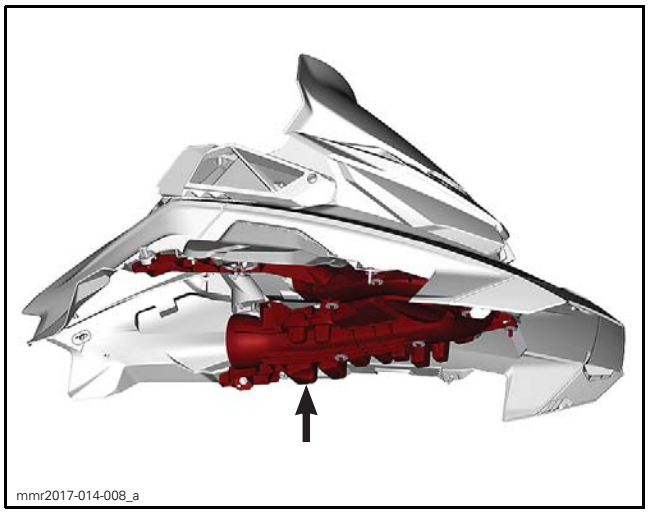


## Removing the Secondary Air Intake Silencer

Referring to the *BODY* subsection, remove the upper body module.

Remove the following screws.

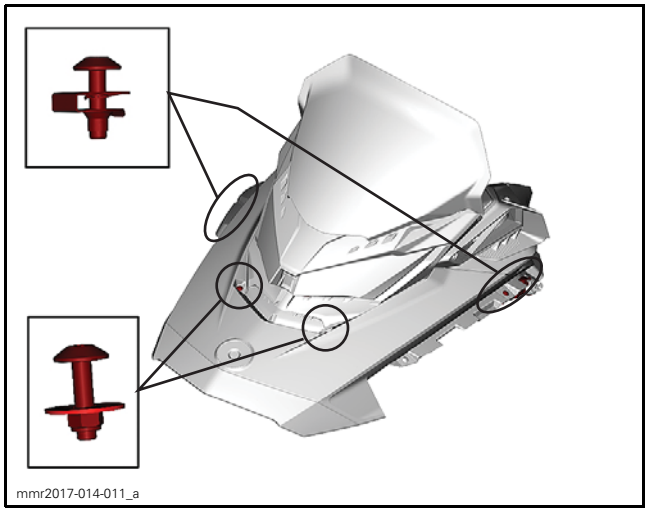


Turn the upper body module upside down and remove the soundproofing panel.

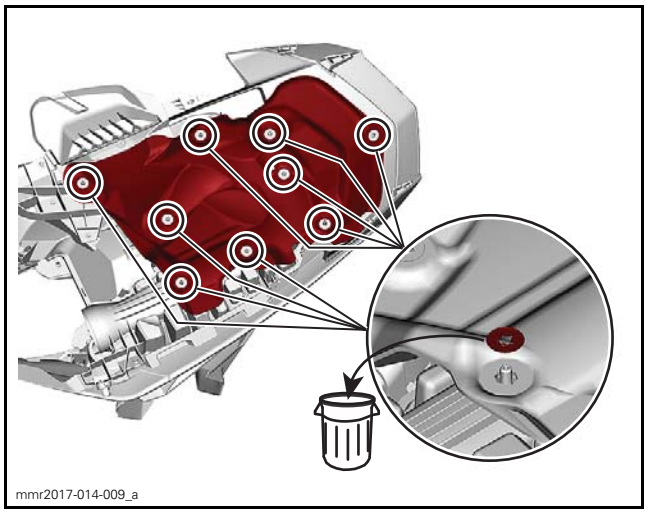


Remove fasteners retaining secondary air intake silencer to upper body module.

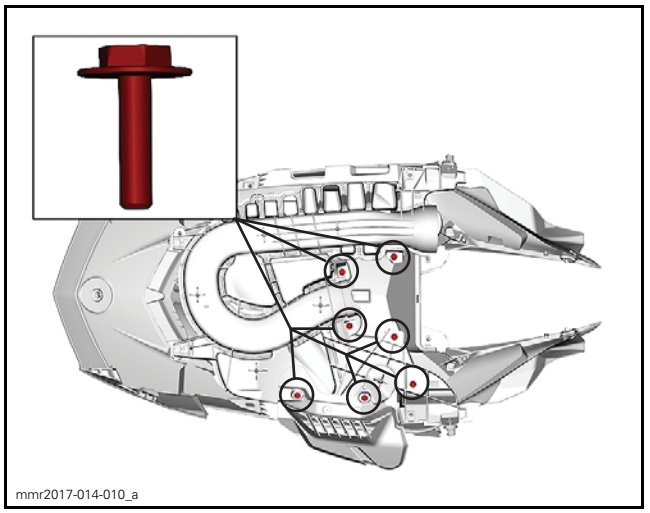


## Installing the Secondary Air Intake Silencer

The installation is the reverse of the removal procedure.

# AIR INTAKE SYSTEM (ACE)

*Models without Turbocharger*

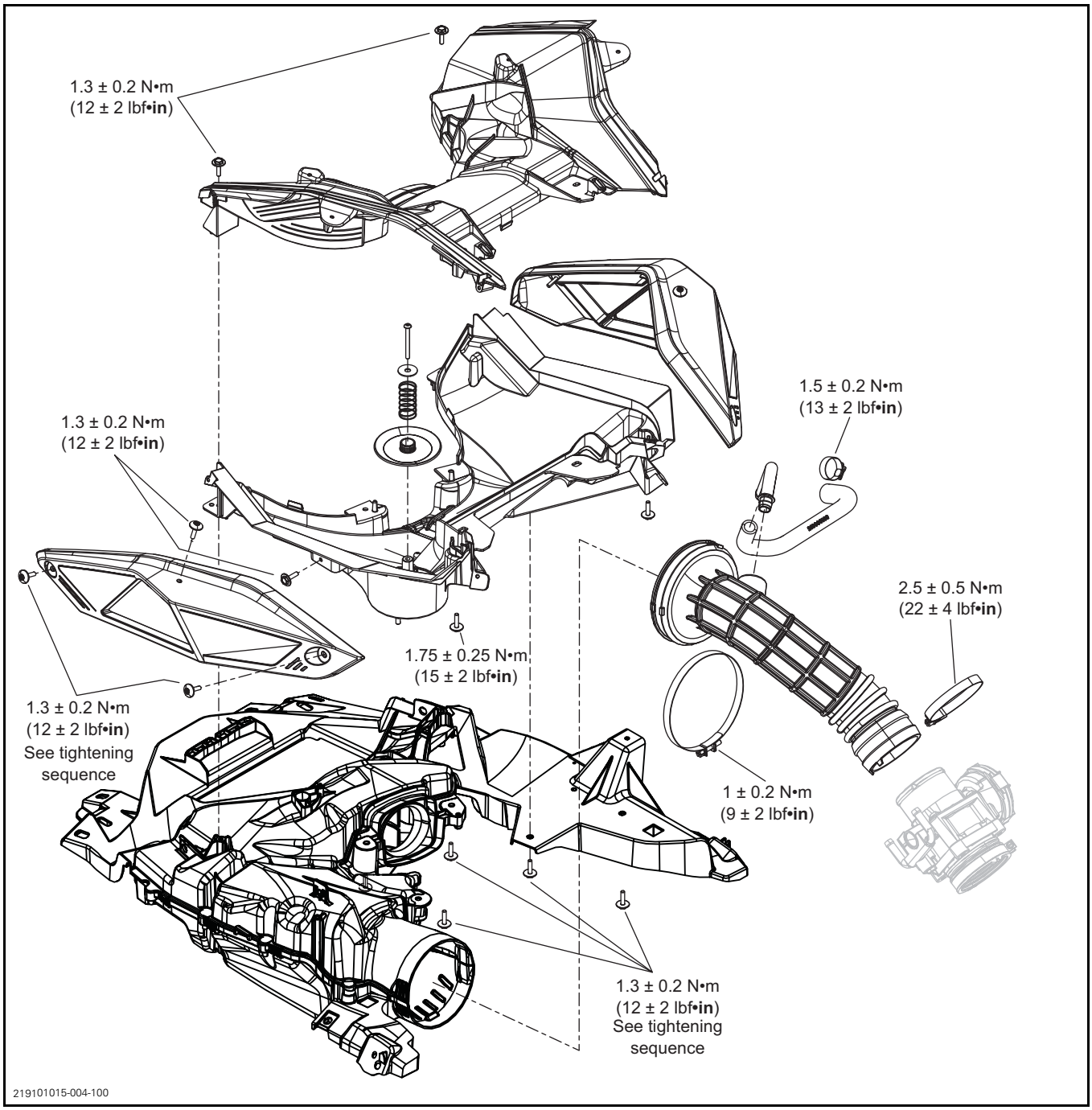

*Models with Turbocharger*

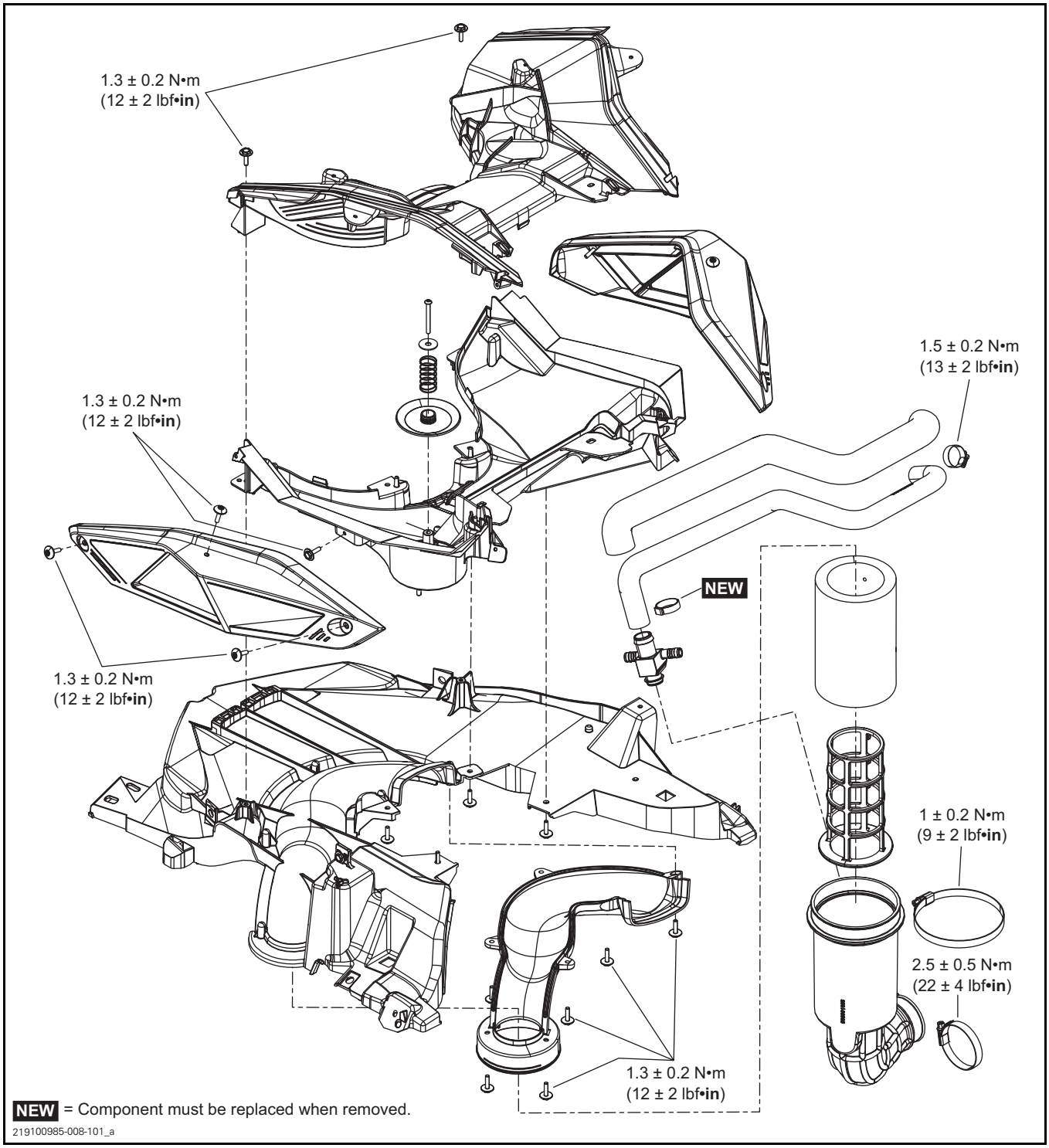

# GENERAL

**⚠ WARNING**

Torque wrench tightening specifications must be strictly adhered to.
Locking devices must be replaced with a new ones when removed (e.g.: locking tabs, elastic stop nuts, cotter pins, etc.).

***NOTICE*** Hoses, cables and locking ties removed during a procedure must be reinstalled as per factory standards.

# PROCEDURES

## AIR FILTER (MESH)

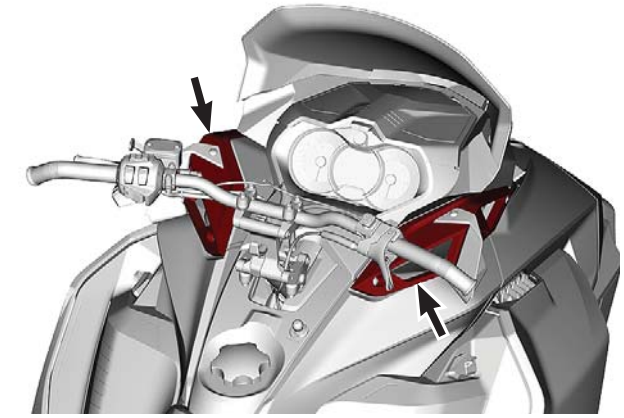

mmr2017-014-001_a

The same procedure applies for RH and LH side.

### Removing the Air Filter

Remove screws from mesh filter housing.

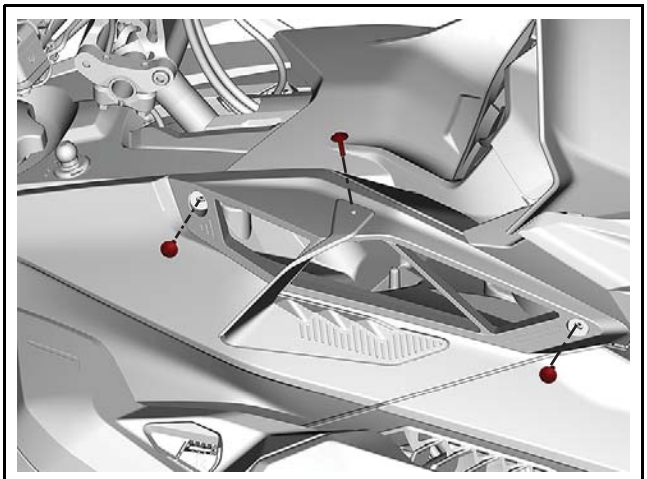

mmr2017-014-002_a

Remove the air deflector if equipped.

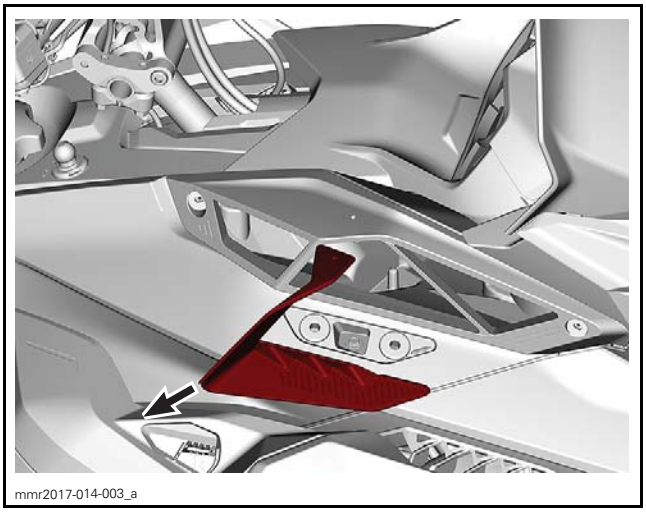

mmr2017-014-003_a

Remove the mesh filter housing from the upper body module.

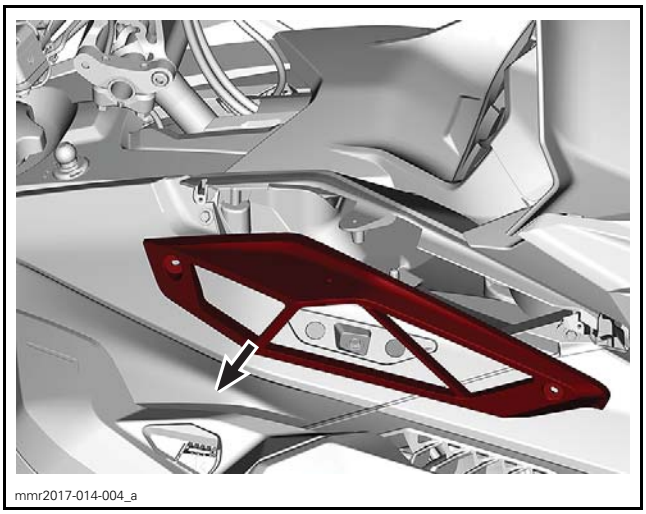

mmr2017-014-004_a

### Cleaning the Air Filter

Clean with fresh water and mild soap.

Replace air filter if required.

NOTE: If the filter is very dirty, clean the interior of secondary air intake silencer at the same time.

### Installing the Air Filter

The installation is the reverse of the removal procedure. However, pay attention to the following.

Refer to exploded views for appropriate tightening torques.

Tighten air filter screws following the tightening sequence.

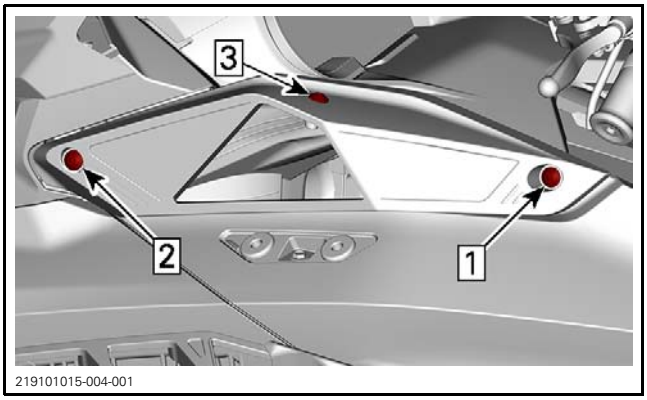

219101015-004-001

# AIR INTAKE SILENCER

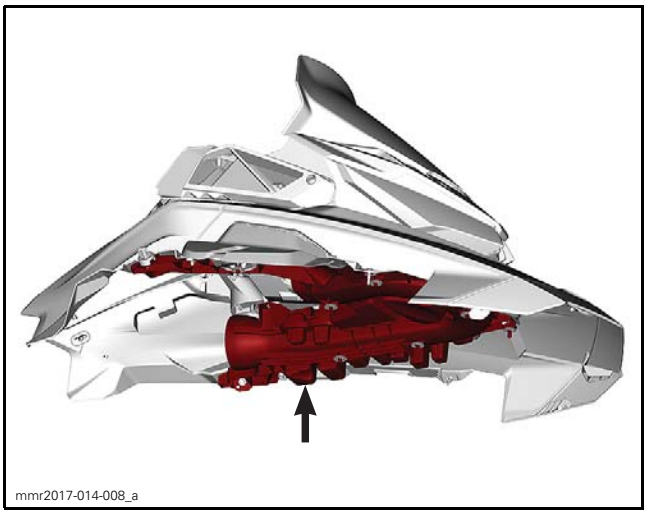
mmr2017-014-008_a

## Removing the Air Intake Silencer

The procedure is the same for both sides.

1. Remove the upper body module. Refer to the *BODY* subsection.
2. Remove the air filters.
3. Remove the following parts and screws.

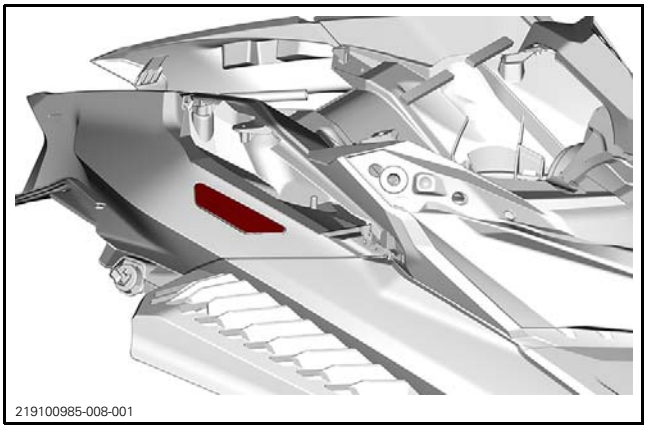
219100985-008-001

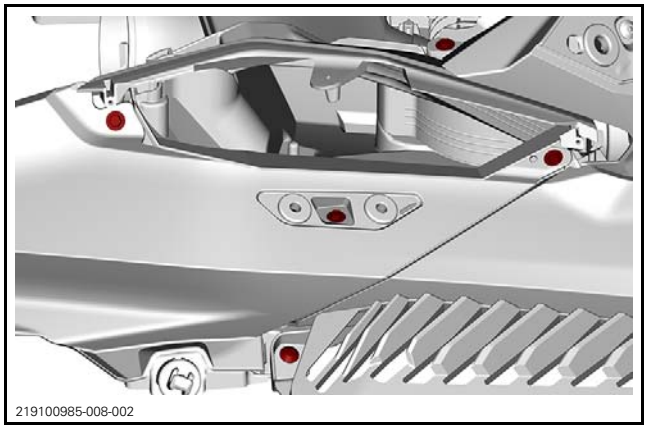
219100985-008-002

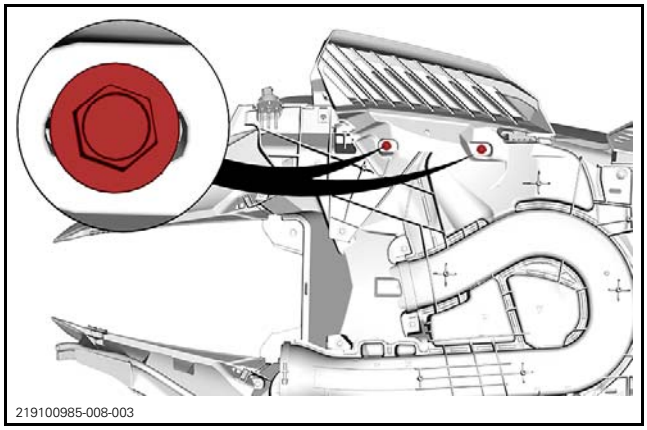
219100985-008-003

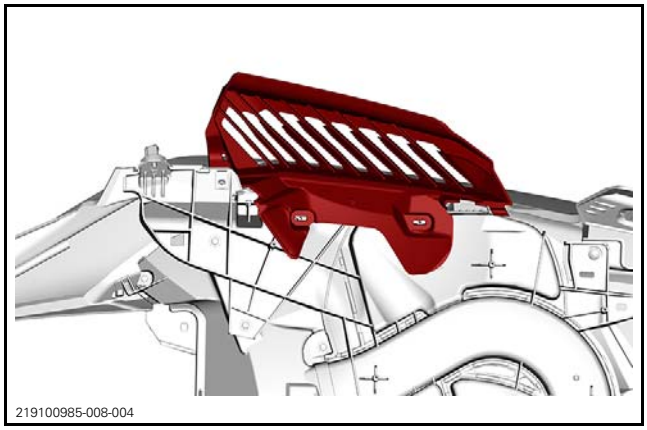
219100985-008-004

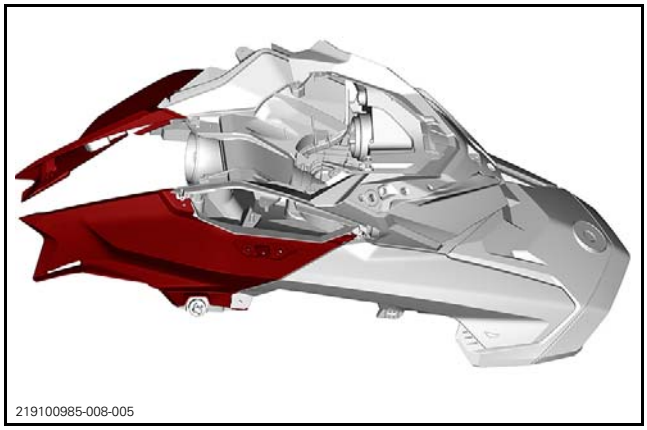
219100985-008-005

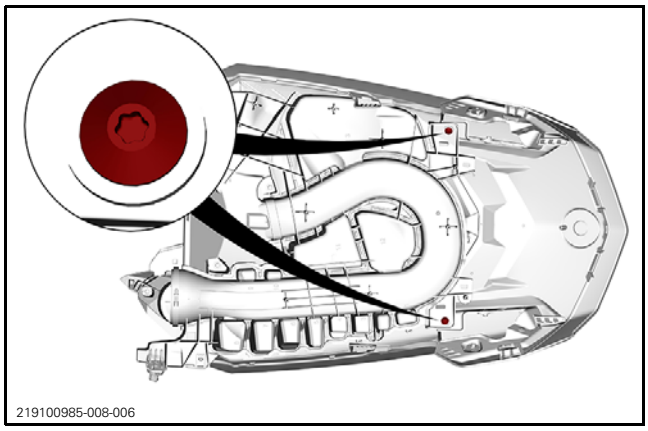
219100985-008-006

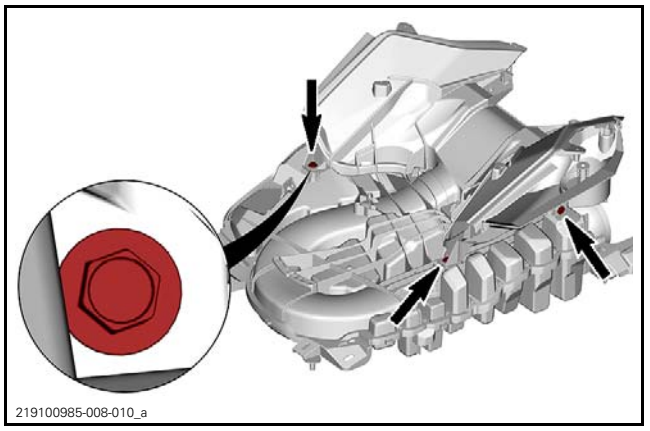
219100985-008-010_a

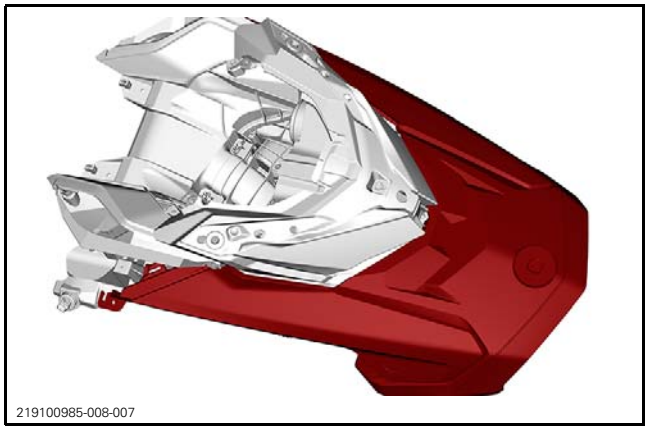
219100985-008-007

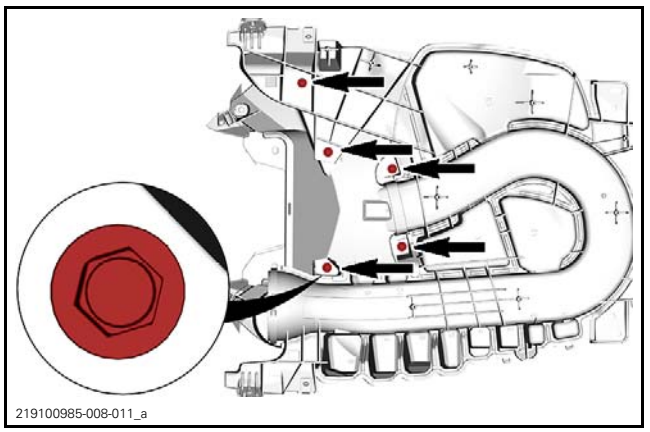
219100985-008-011_a

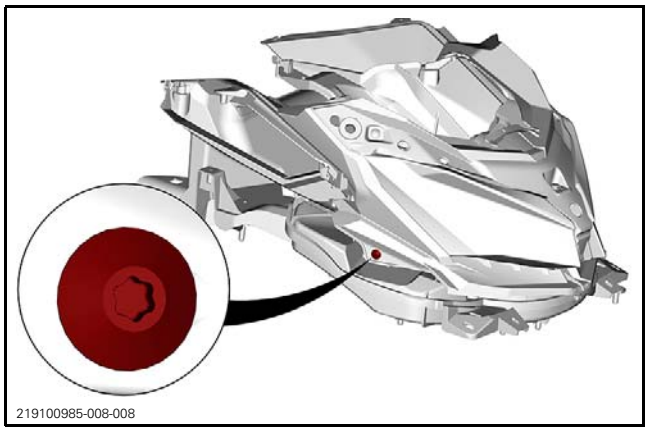
219100985-008-008

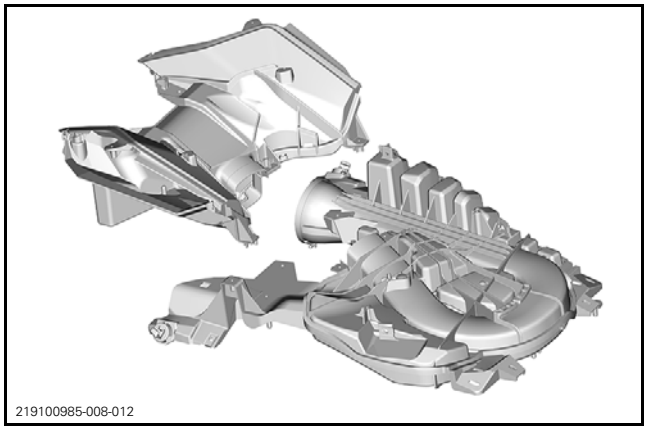
219100985-008-012

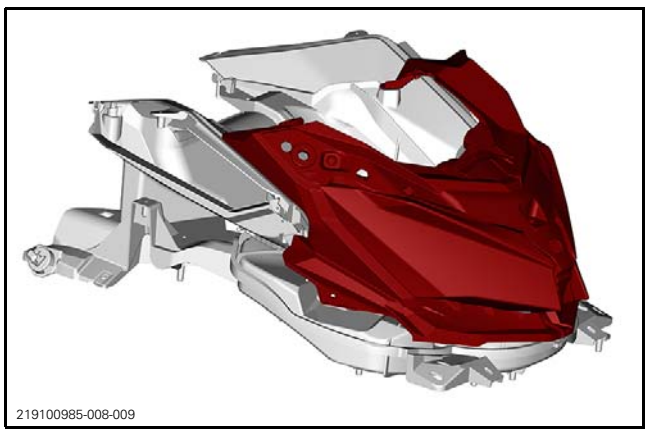
219100985-008-009

## Installing the Air Intake Silencer

The installation is the reverse of the removal procedure. However, pay attention to the following.

Refer to exploded views for appropriate tightening torques.

Tighten air intake silencer screws following the tightening sequence.

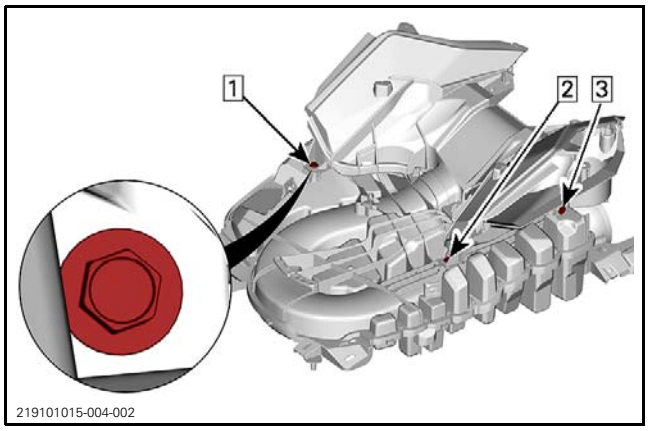

219101015-004-002

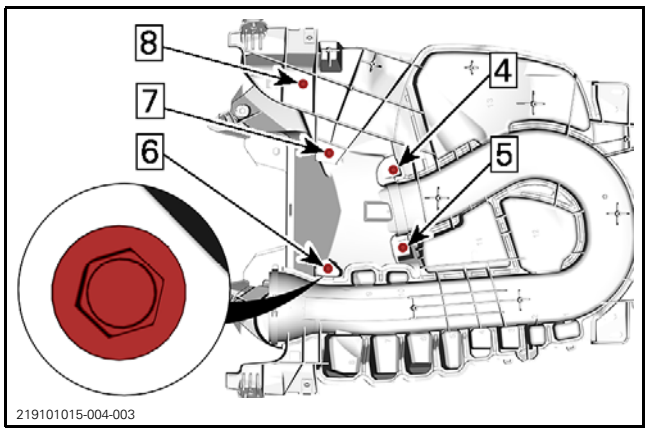

219101015-004-003

# EXHAUST SYSTEM (EFI AND E-TEC)

## SERVICE TOOLS

| Description | Part Number | Page |
|---|---|---|
| SPRING INSTALLER/REMOVER | 529 035 983 | 55, 60 |

*Models With One Exhaust Gas Temperature Sensor (EGTS)*

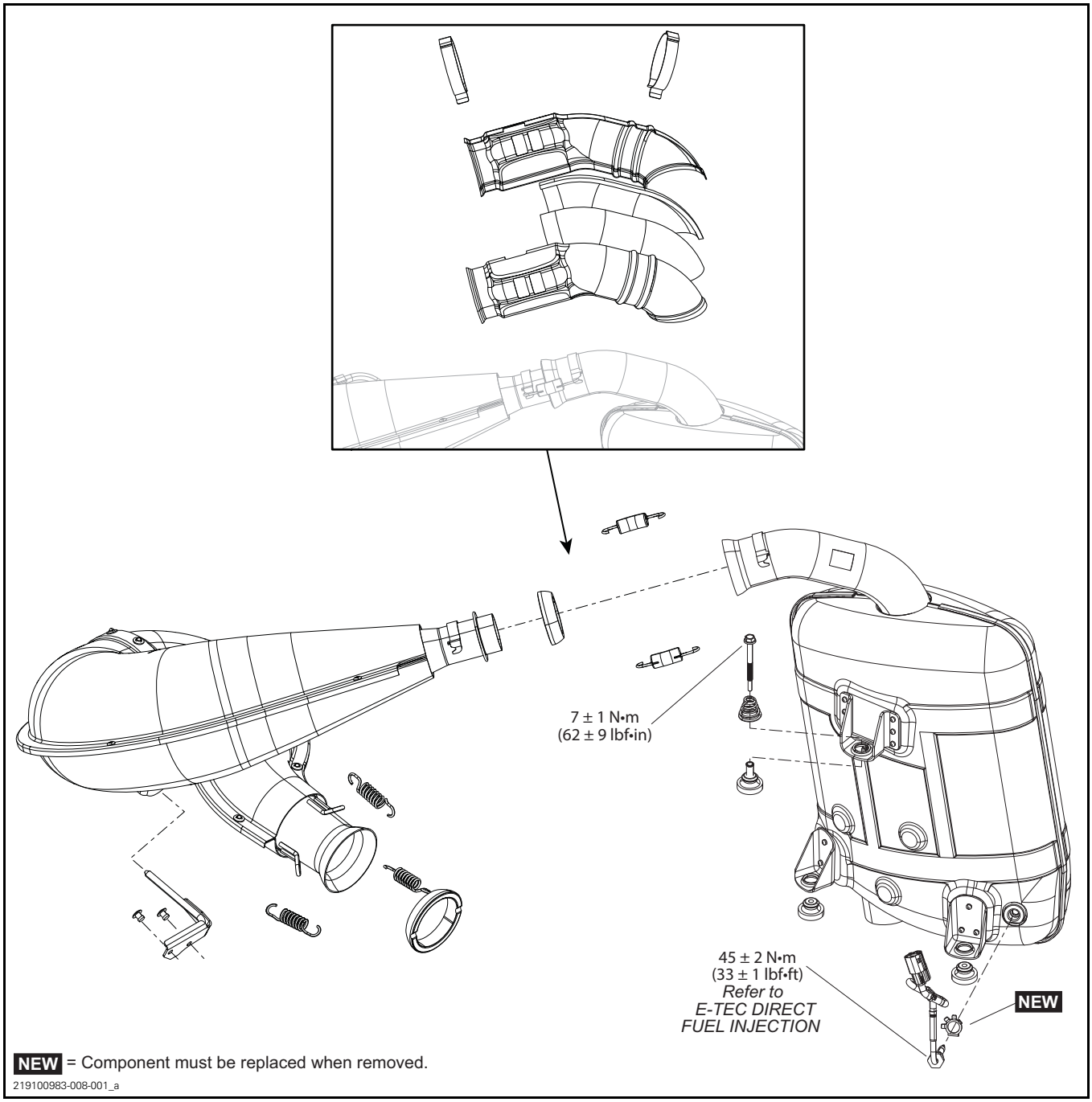

*Models With Two Exhaust Gas Temperature Sensors (EGTS)*

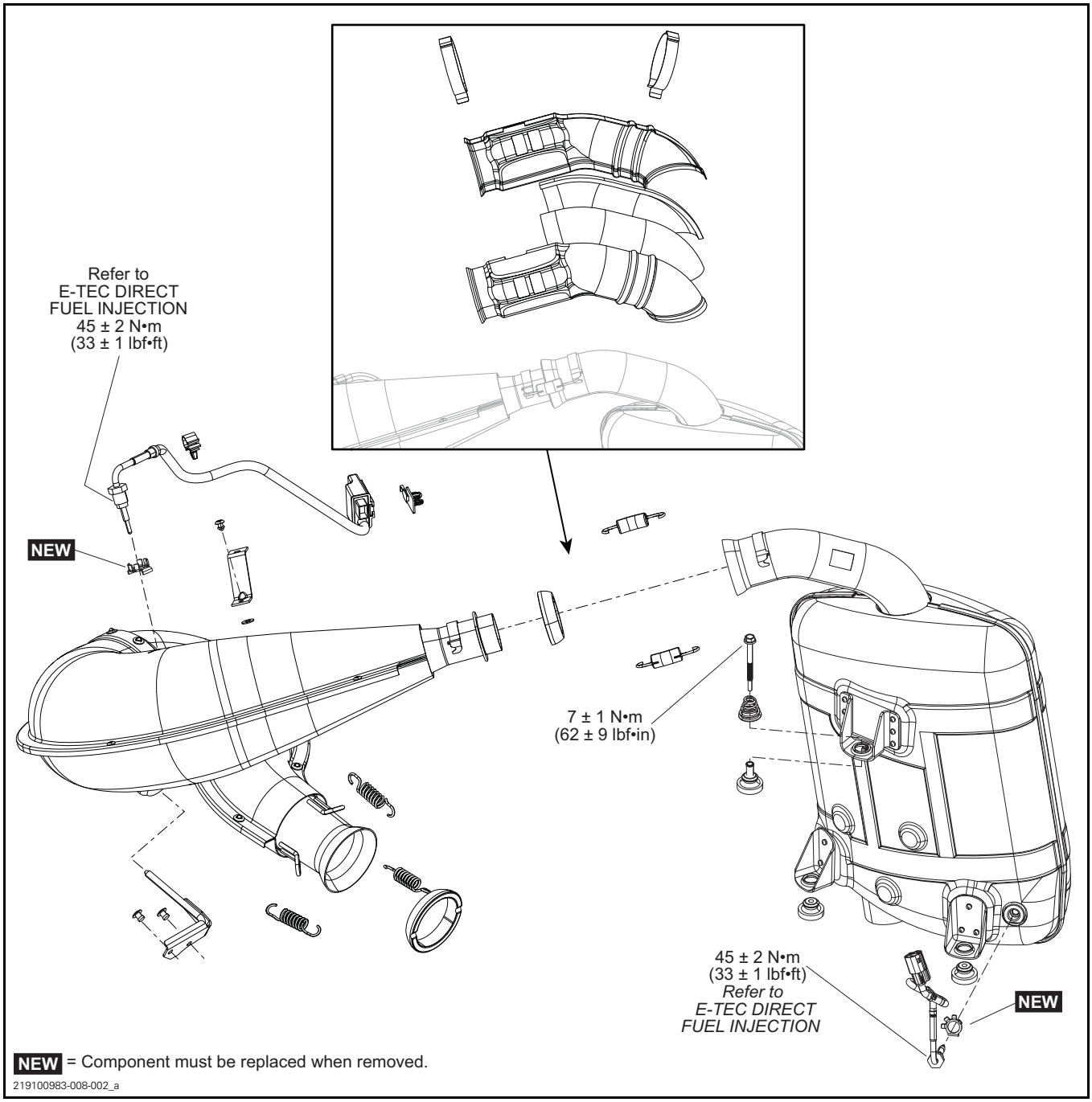

# GENERAL

**⚠ WARNING**

To avoid potential burns, never touch exhaust system components immediately after the engine has been running because these components are very hot. Let engine and exhaust system cool down before performing any servicing.

During assembly/installation, use the torque value and service products as in the exploded view.

**⚠ WARNING**

Torque wrench tightening specifications must be strictly adhered to.
Locking devices (e.g.: locking tabs, elastic stop nuts, self-locking fasteners, cotter pins, etc.) must be replaced with new ones.

# MAINTENANCE

## INSPECTING THE EXHAUST SYSTEM

Check the following components for leaks, cracks, or other damages:
- Springs and retainers
- Exhaust system mounts
- Muffler
- Tuned pipe
- Donut gaskets
- Shields
- Manifold.

# PROCEDURES

## MUFFLER

### Removing the Muffler

1. Refer to *BODY* subsection and remove the following parts.

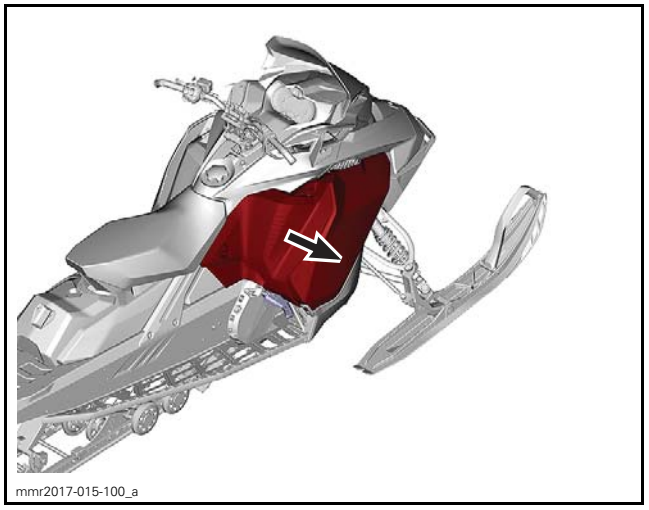
mmr2017-015-100_a

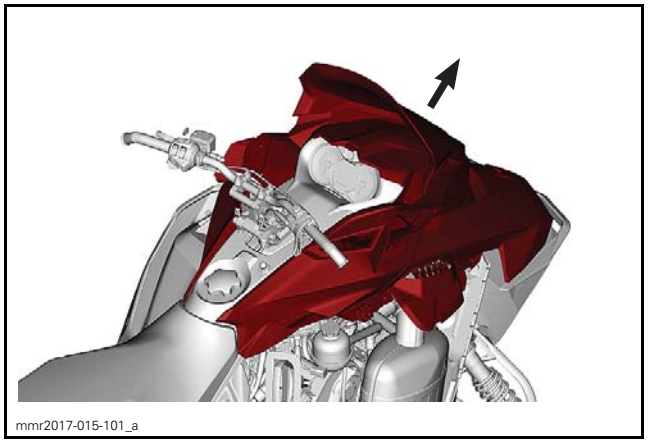
mmr2017-015-101_a

2. Remove heat shields from the muffler pipe.

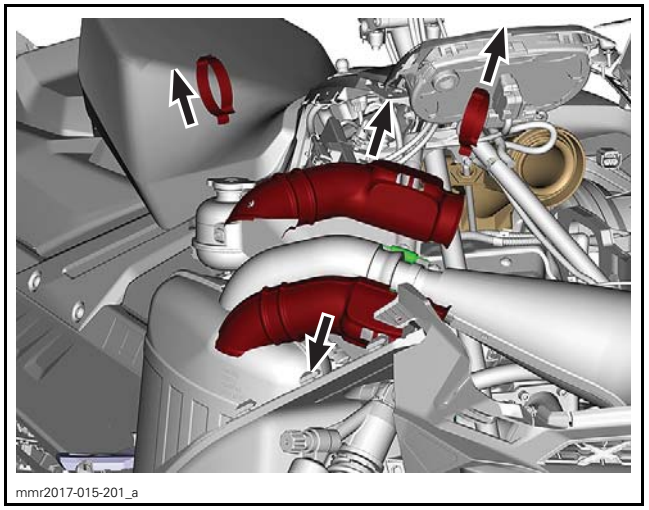
mmr2017-015-201_a

3. Remove exhaust springs retaining the tuned pipe to the muffler.

| REQUIRED TOOL | |
|---|---|
| SPRING INSTALLER/REMOVER (P/N 529 035 983) | |

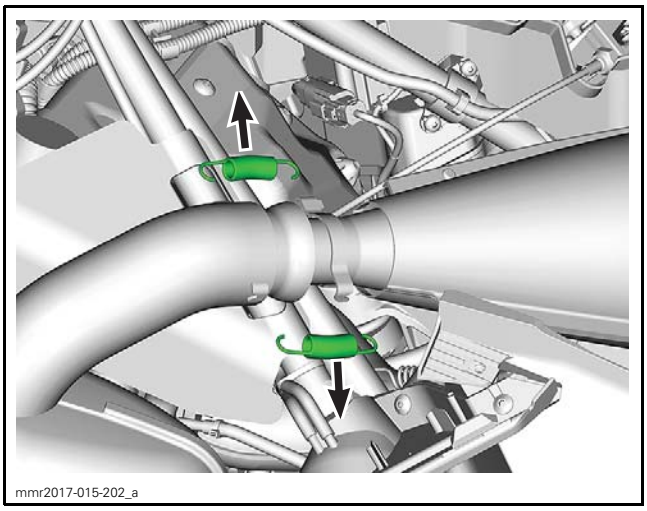
mmr2017-015-202_a

4. Disconnect the power harness from the muffler EGTS.

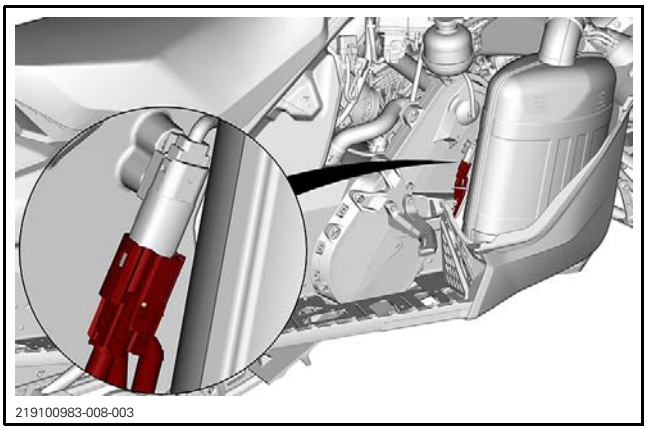
219100983-008-003

5. Behind the muffler, remove the retaining screw and its spring.

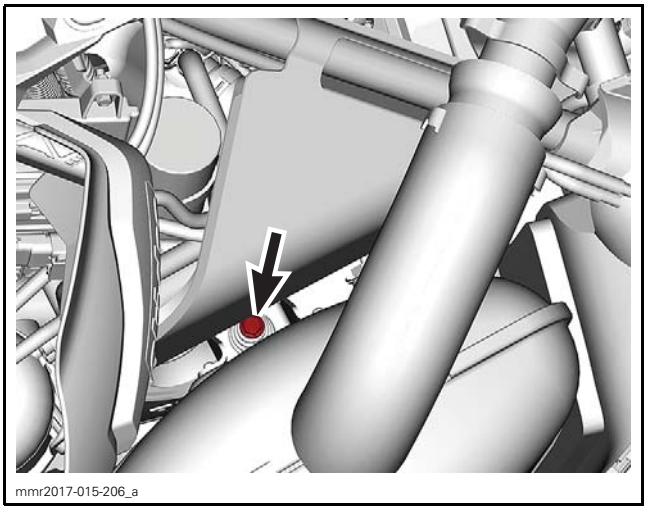
mmr2017-015-206_a

6. Remove the muffler.

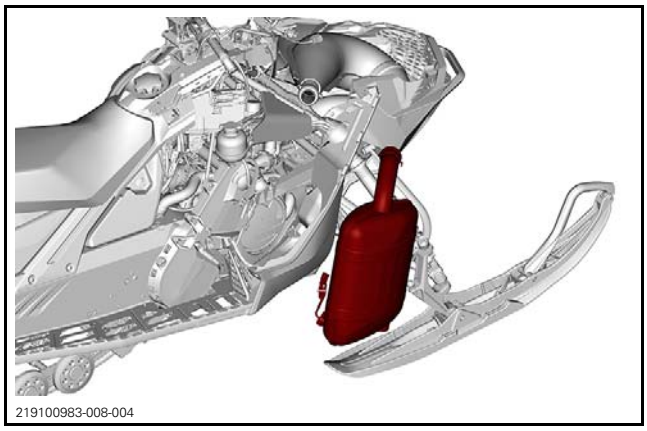
219100983-008-004

7. Remove exhaust gasket.

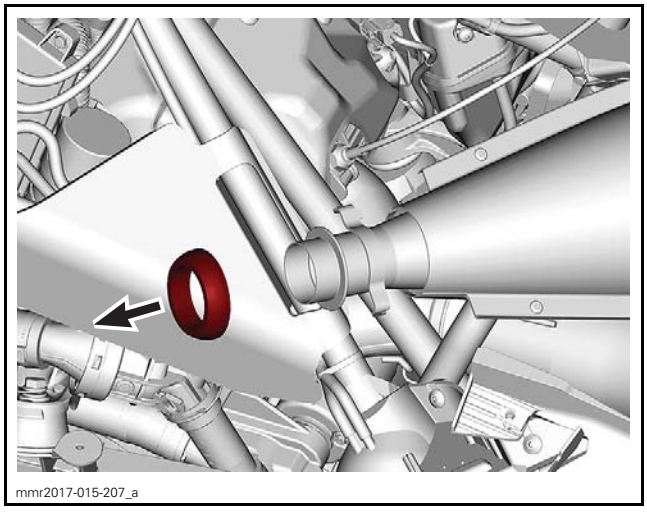
mmr2017-015-207_a

## Inspecting the Muffler

Check the muffler for cracks or other damages.

Check grommet condition.

Inspect exhaust gasket condition. Replace as required.

## Installing the Muffler

The installation is the reverse of the removal procedure. However, pay attention to the following.

### Muffler Retaining Screw

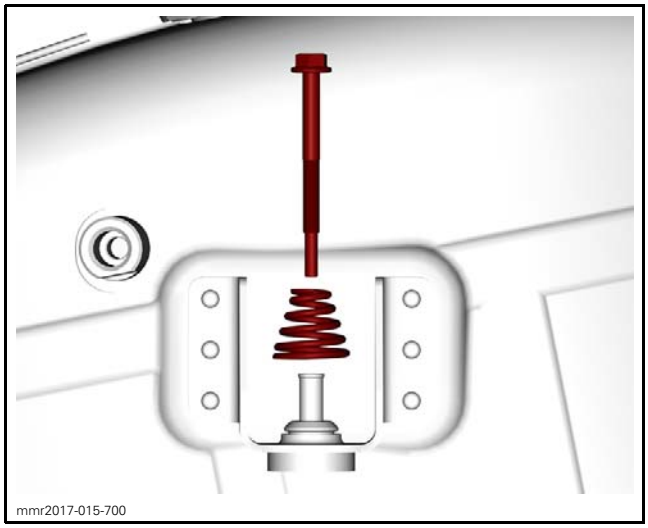
mmr2017-015-700

| TIGHTENING TORQUE | |
|---|---|
| Muffler retaining screw | 7 N•m ± 1 N•m (62 lbf•**in** ± 9 lbf•**in**) |

## Replacing the Muffler Shell

1. Remove muffler.
2. Place muffler flat on a work bench.
3. Using a pair of adjustable channel lock pliers, unfold the deflectors lip/edges all around the muffler perimeter as depicted below.


mbs2019-008_004

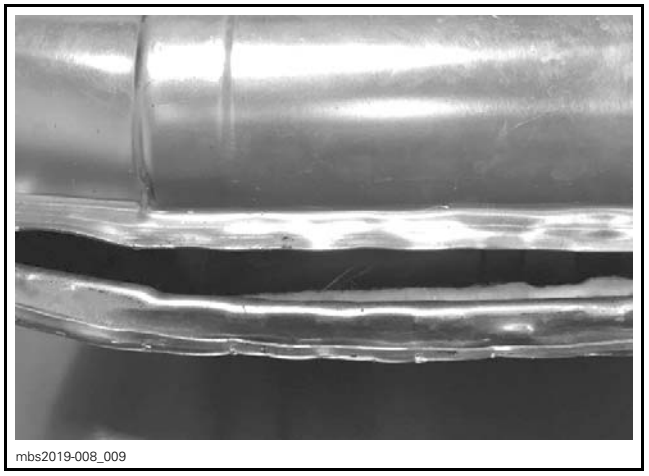
mbs2019-008_009

4. Remove and discard the two deflectors, keeping both insulating wool for reuse.

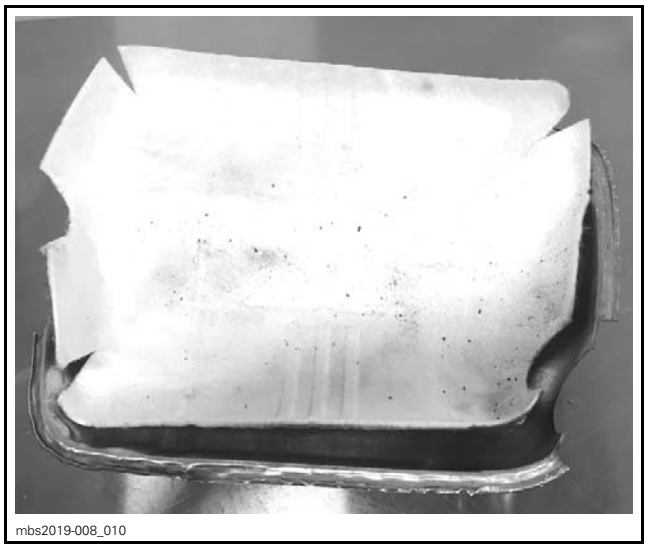
mbs2019-008_010

5. Using a 5 mm (3/16 in) drill bit, drill the rivets that hold the three brackets. Keep all three brackets for reuse.

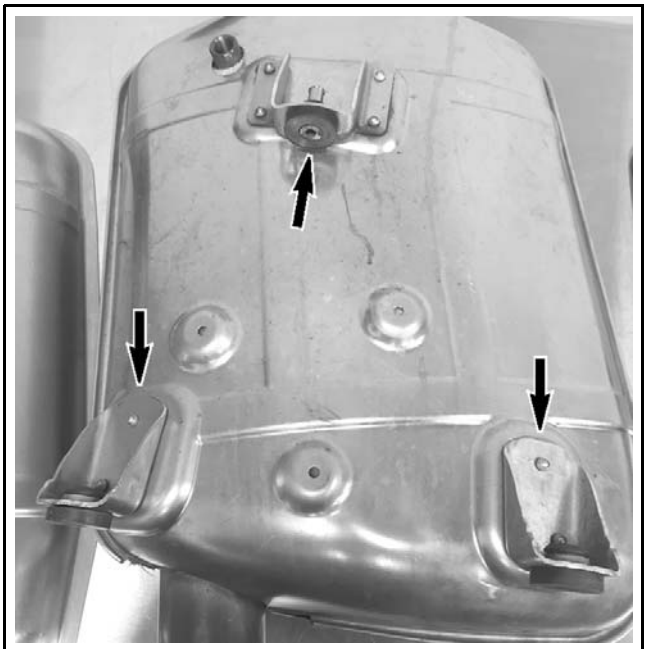
mbs2019-008_012

*3 brackets*

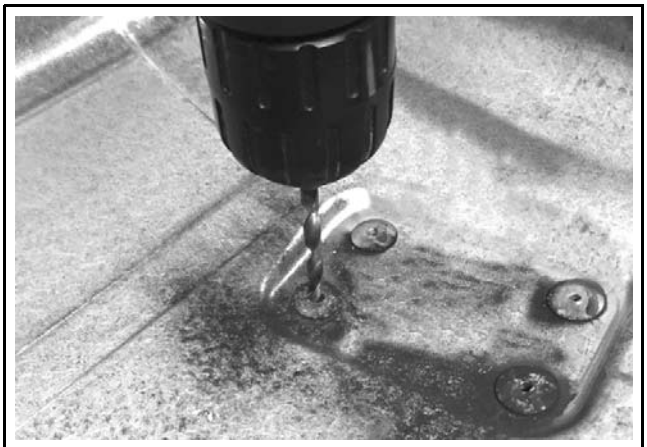
mbs2019-008_011

6. Put a clean rag on your work bench for protection, reinstall all three brackets on LH deflector using new rivets.


mbs2019-008_030

*Upper center bracket*


mbs2019-008_031

*Lower bracket*

7. Place the new LH deflector face down and insert insulating wool previously removed.


mbs2019-008_018

8. Place muffler into LH deflector.


mbs2019-008_019

9. Place insulating wool previously removed onto muffler and install the new RH deflector.


mbs2019-008_020

10. Start by folding the RH deflector edge onto LH deflector edge at an approximate 60° angle using a nylon head hammer all around the muffler perimeter.


mbs2019-008_022

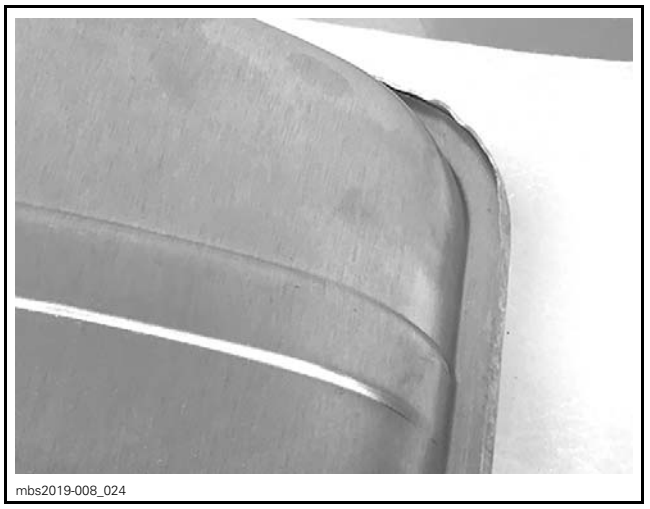
mbs2019-008_024

11. Using a pair of flat nose pliers, fold down flat and squeeze tight the RH deflector edge onto LH deflector edge all around the muffler perimeter.

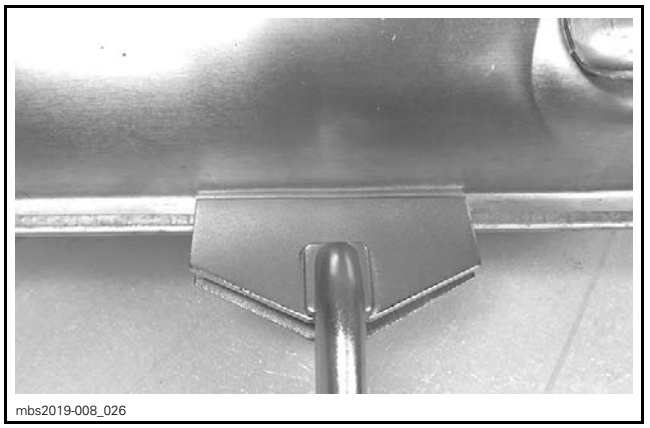
mbs2019-008_026

12. Using a cloth type protective tape, put a few layers of tape around deflectors edge for protection.


mbs2019-008_027

13. Using a steel head hammer, fold up deflector edges up against LH deflector sides, after working around the muffler perimeter, remove the protective tape.

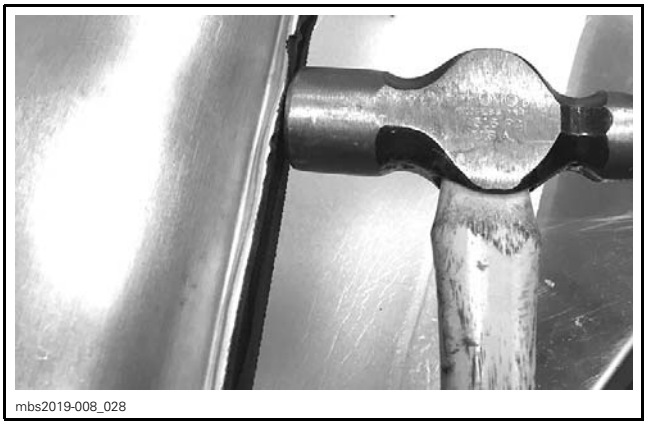
mbs2019-008_028

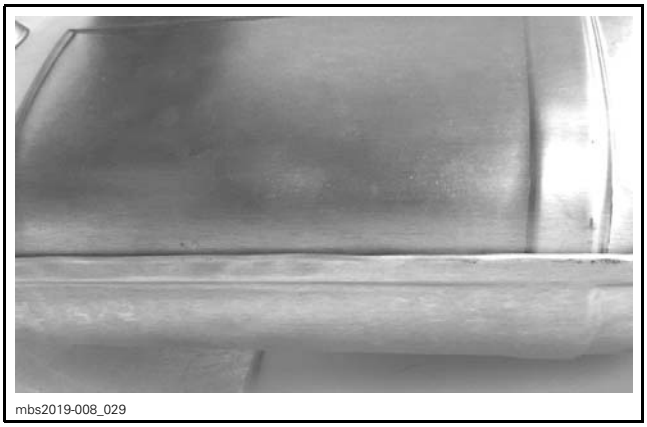
mbs2019-008_029

14. Reinstall muffler.

# TUNED PIPE

## Removing the Tuned Pipe

1. Remove the muffler.
2. Remove exhaust springs retaining the tuned pipe to the exhaust manifold.

| REQUIRED TOOL |
| --- |
| SPRING INSTALLER/REMOVER (P/N 529 035 983) |

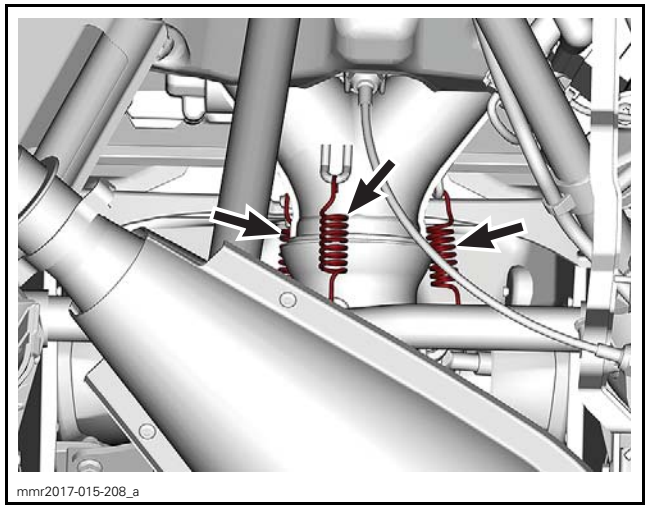
mmr2017-015-208_a

*Models With 2 EGTS*

3. Disconnect the THCM harness from the THCM module.

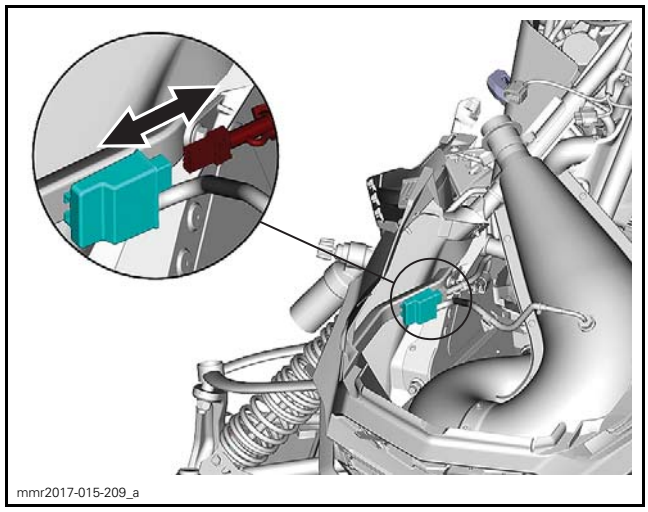
mmr2017-015-209_a

4. Detach the THCM from the vehicle side member.

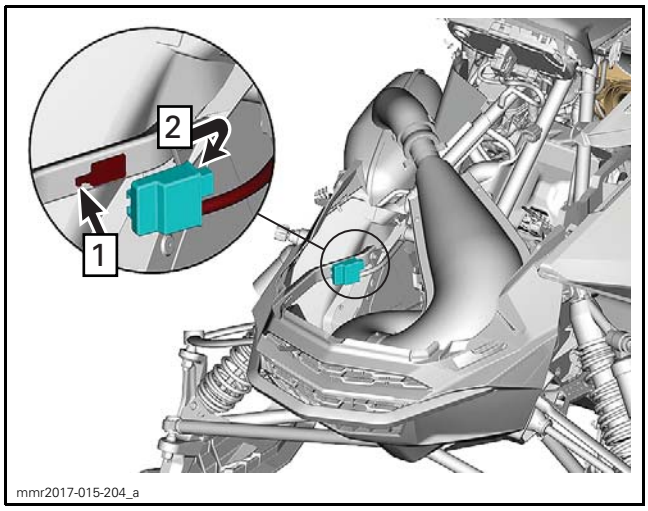


*All Models*

5. Remove tuned pipe.
   - 5.1 Move tuned pipe forwards until the hook gets out of the anti vibration rubber mount.
   - 5.2 Remove the tuned pipe by tilting it (engine side).

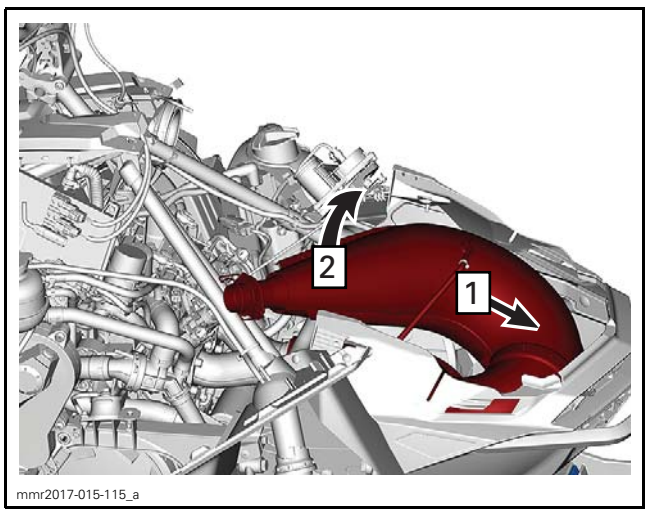


6. Remove exhaust gasket.

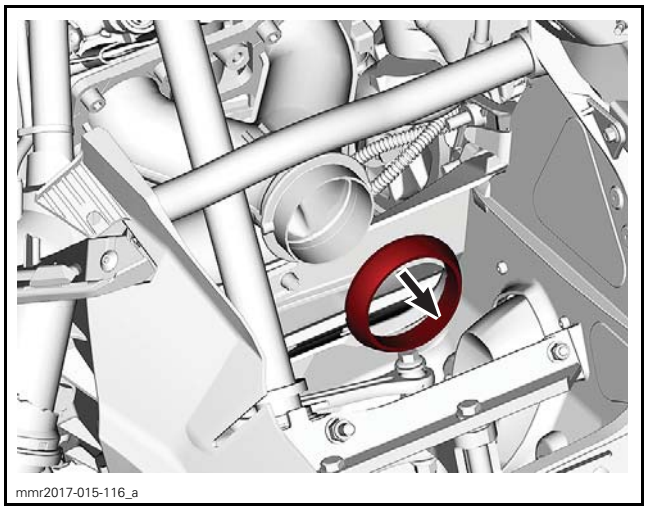


### Inspecting the Tuned Pipe

Check exhaust pipe for:
- Damages
- Cracks.

Inspect exhaust gasket condition. Replace as required.

### Installing the Tuned Pipe

The installation is the reverse of the removal procedure.

## EXHAUST GAS TEMPERATURE SENSOR (EGTS)

### Removing the EGTS

Unfold all tabs.

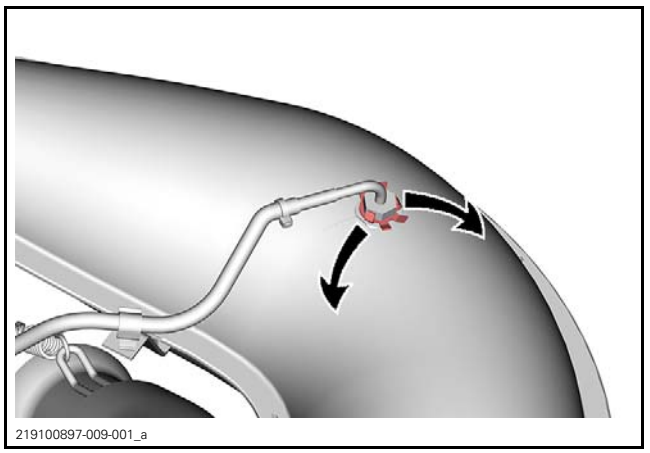


*TYPICAL*

Remove sensor.

### Installing the EGTS

The installation is the reverse of the removal procedure. However, pay attention to the following.

Install a new locking tab as shown and tighten sensor to specification.

On the tuned pipe, fold two (2) tabs on sensor.

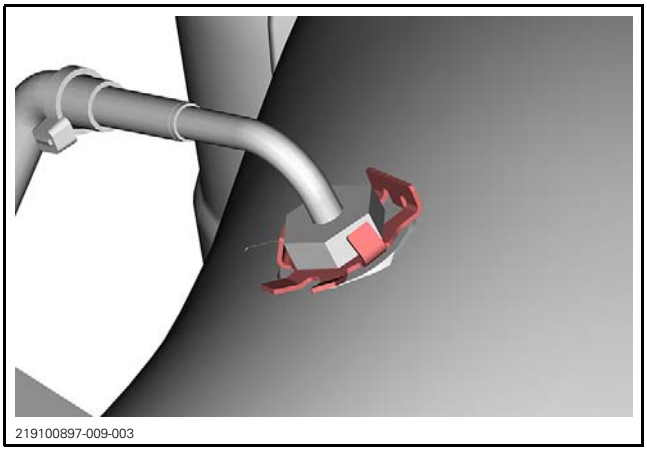


*TUNED PIPE INSTALLATION*

On the muffler, fold one (1) tab on sensor.

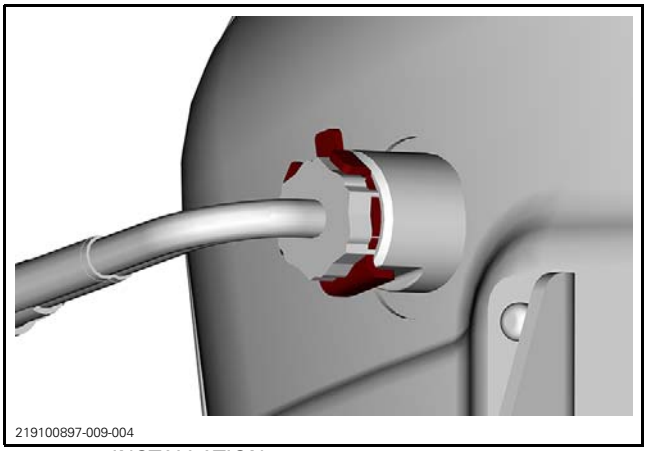


*MUFFLER INSTALLATION*

| TIGHTENING TORQUE | |
|---|---|
| Exhaust Gas Temperature Sensor | 45 N•m ± 2 N•m (33 lbf•ft ± 1 lbf•ft) |

# EXHAUST SYSTEM (600 ACE)

## SERVICE TOOLS

| Description | Part Number | Page |
|---|---|---|
| SPRING INSTALLER/REMOVER | 529 035 983 | 64 |

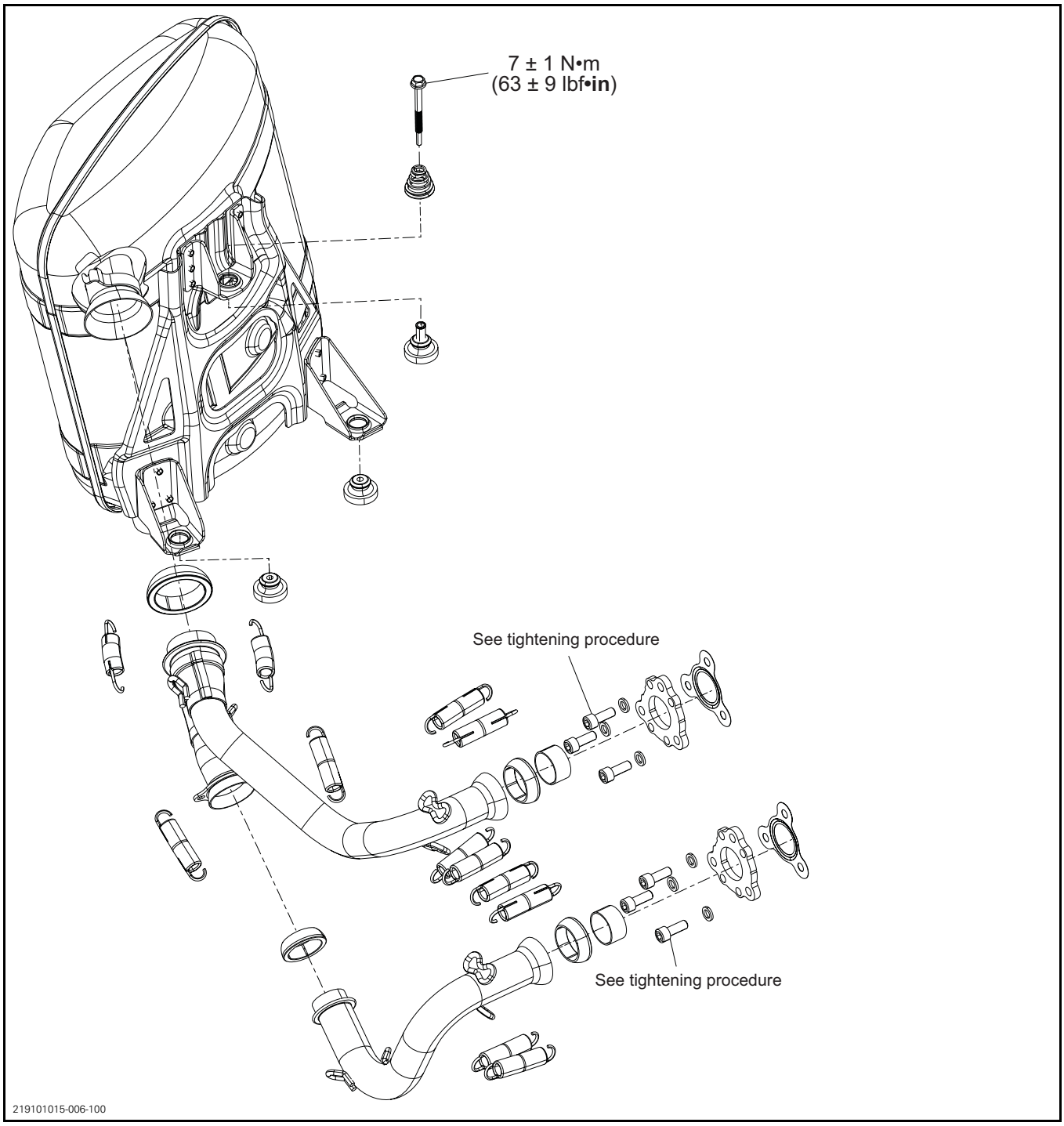

# GENERAL

**⚠ WARNING**

To avoid potential burns, never touch exhaust system components immediately after the engine has been running because these components are very hot. Let engine and exhaust system cool down before performing any servicing.

During assembly/installation, use the torque value and service products as in the exploded view.

**⚠ WARNING**

Torque wrench tightening specifications must be strictly adhered to.
Locking devices (e.g.: locking tabs, elastic stop nuts, self-locking fasteners, cotter pins, etc.) must be replaced with new ones.

# MAINTENANCE

## INSPECTING THE EXHAUST SYSTEM COMPONENTS

Check the following components for leaks, cracks, or other damages:
- Springs and retainers
- Exhaust system mounts
- Muffler
- Exhaust pipe
- Donut gaskets
- Shields
- Manifold.

# PROCEDURES

## MUFFLER

### Removing the Muffler

1. Remove the upper body module. Refer to *BODY* subsection.
2. Remove exhaust springs retaining the exhaust pipe to the muffler.

| REQUIRED TOOL | |
|---|---|
| SPRING INSTALLER/REMOVER (P/N 529 035 983) |  |

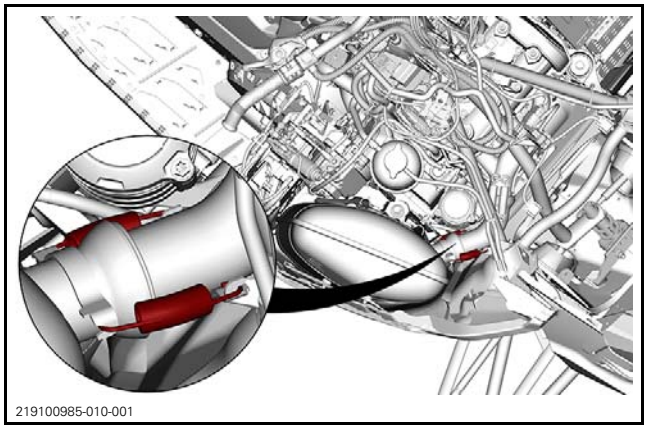
219100985-010-001

3. Behind the muffler, remove the retaining screw and its spring.

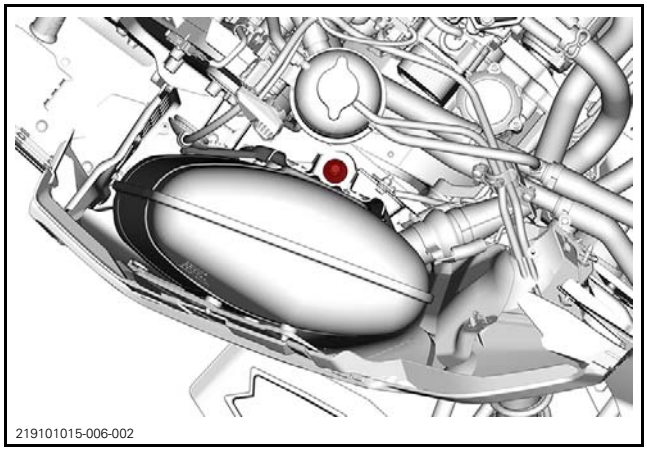
219101015-006-002

4. Remove the muffler.
5. Remove exhaust gasket.

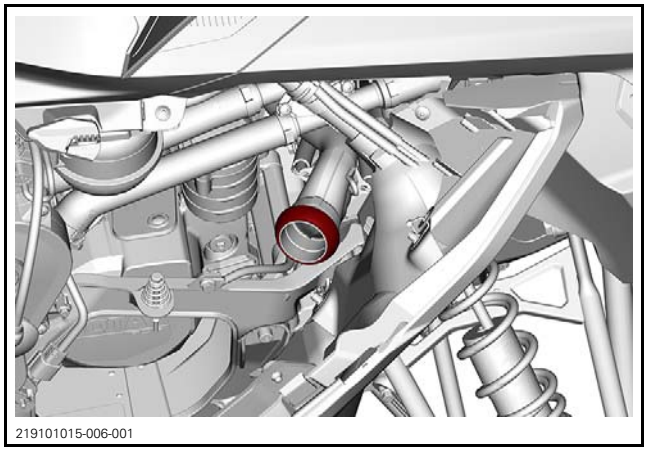
219101015-006-001

### Inspecting the Muffler

Check the muffler for cracks or other damages.

Check grommet condition.

Inspect exhaust gasket condition. Replace as required.

### Installing the Muffler

The installation is the reverse of the removal procedure. However, pay attention to the following.

| TIGHTENING TORQUE | |
|---|---|
| Muffler retaining screw | 7 N•m ± 1 N•m (62 lbf•**in** ± 9 lbf•**in**) |

## EXHAUST PIPE

### Removing the Exhaust Pipe

1. Remove the muffler.
2. Remove exhaust springs retaining the exhaust pipe to the exhaust manifold.

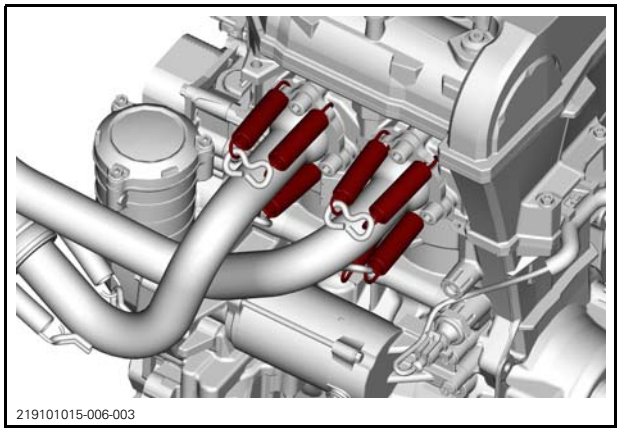
219101015-006-003

3. Remove exhaust pipe and gaskets.

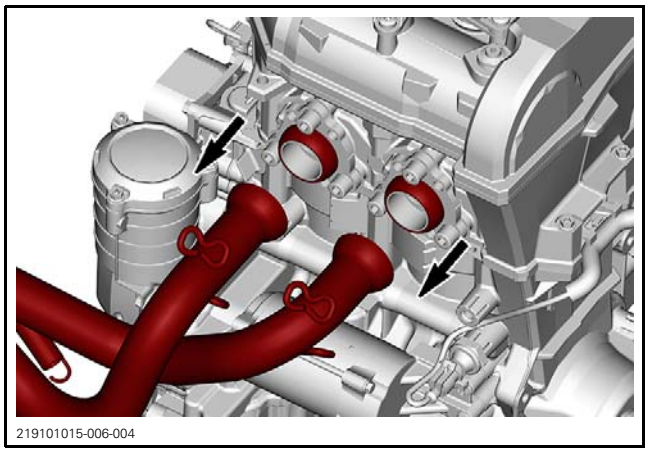
219101015-006-004

4. Remove spacers by removing the retaining screws, washers and gaskets.

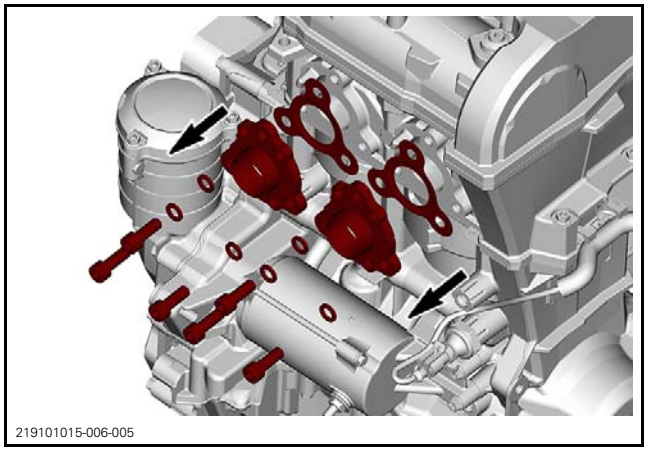
219101015-006-005

The installation is the reverse of the removal procedure. Pay attention to the tightening procedure.

| TIGHTENING PROCEDURE | |
|---|---|
| Exhaust pipe retaining screw (Pre-tightening torque) | 7 N•m ± 1 N•m (62 lbf•**in** ± 9 lbf•**in**) |
| Exhaust pipe retaining screw (Final tightening torque) | 7 N•m ± 1 N•m (62 lbf•**in** ± 9 lbf•**in**) |

### Removing the Heat Shields

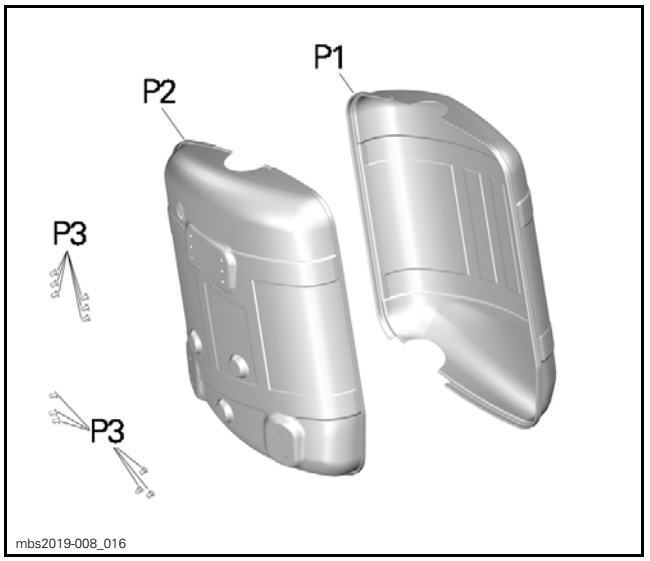

mbs2019-008_016

| ITEM | DESCRIPTION | PART NUMBER | QUANTITY |
|---|---|---|---|
| P1 | RH Deflector | 514055792 | 1 |
| P2 | LH Deflector | 514055707 | 1 |
| P3 | Rivet Avex | 390909100 | 12 |

1. Remove muffler. Refer to procedure in this subsection.
2. Place muffler flat on a work bench.

3. Using a pair of adjustable channel lock pliers, unfold the deflectors lip/edges all around the muffler perimeter as depicted below.


mbs2019-008_003


mbs2019-008_004

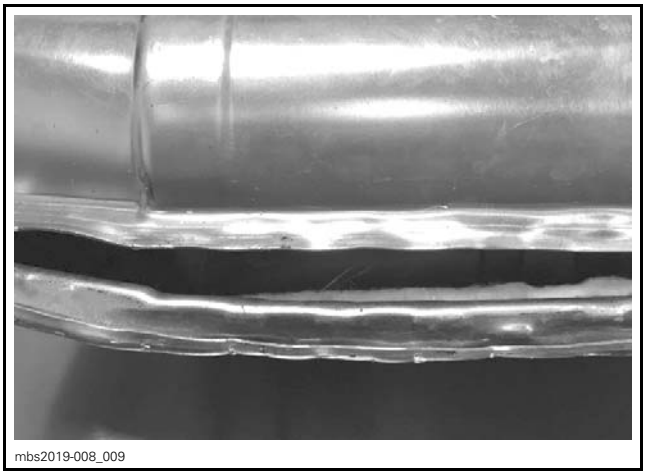
mbs2019-008_009

4. Remove and discard the two deflectors, keeping both insulating wool for reuse.

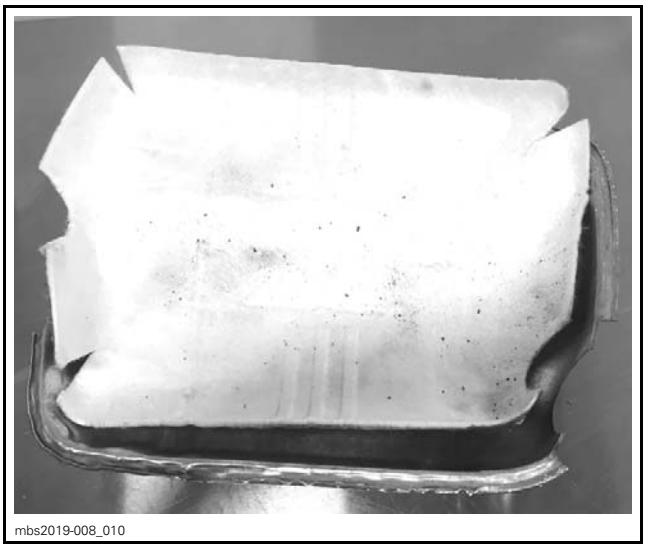
mbs2019-008_010

5. Using a 5 mm (3/16 in) drill bit, drill the rivets that hold the three brackets. Keep all three brackets for reuse.

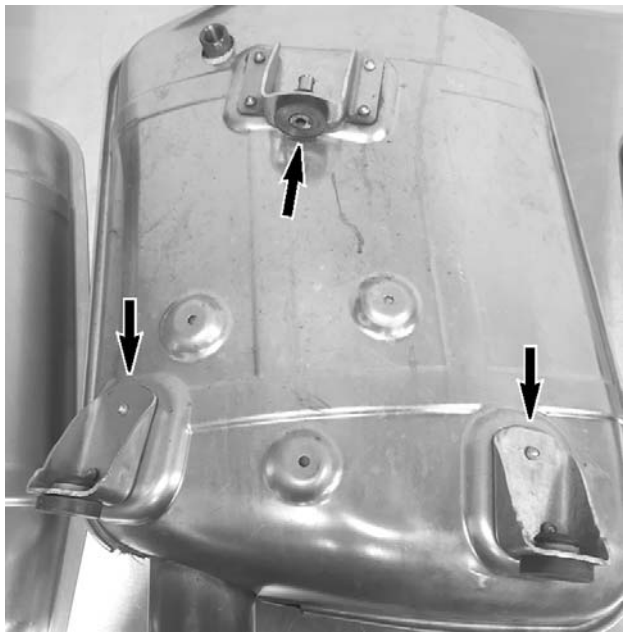
mbs2019-008_012

*3 brackets*


mbs2019-008_011

## Installing the Heat Shields

1. Put a clean rag on your work bench for protection, reinstall all three brackets on LH deflector **no. P2** using new rivets **no. P3**.


mbs2019-008_030

*Upper center bracket*


mbs2019-008_031

*Lower bracket*

2. Place the new LH deflector face down and insert insulating wool previously removed.


mbs2019-008_018

3. Place muffler into LH deflector.


mbs2019-008_019

4. Place insulating wool previously removed onto muffler and install the new RH deflector **no. P1**.


mbs2019-008_020

5. Start by folding the RH deflector edge onto LH deflector edge at an approximate 60° angle using a nylon head hammer all around the muffler perimeter.

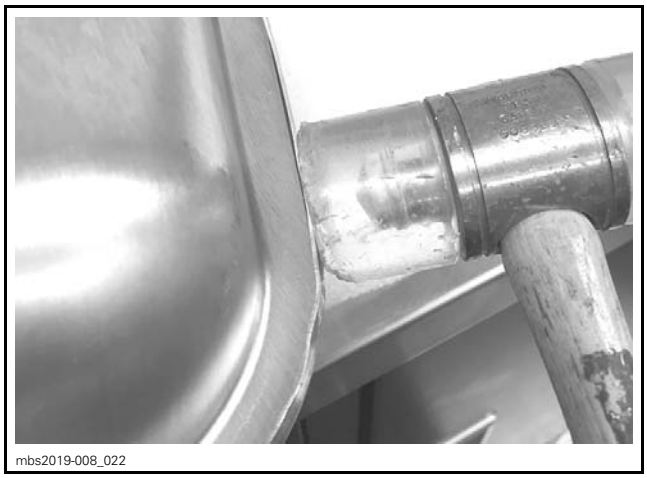
mbs2019-008_022

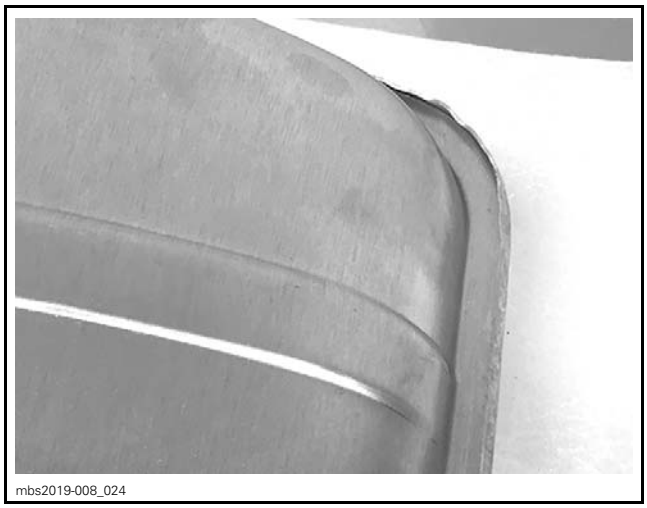
mbs2019-008_024

6. Using a pair of flat nose pliers, fold down flat and squeeze tight the RH deflector edge onto LH deflector edge all around the muffler perimeter.

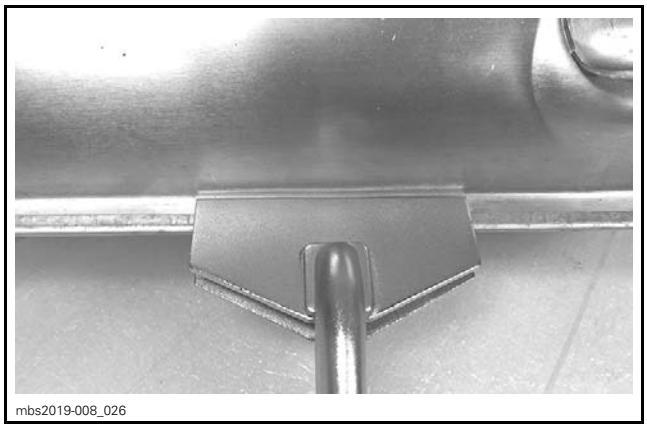
mbs2019-008_026

7. Using a cloth type protective tape, put a few layers of tape around deflectors edge for protection.


mbs2019-008_027

8. Using a steel head hammer, fold up deflector edges up against LH deflector sides, after working around the muffler perimeter, remove the protective tape.


mbs2019-008_028


mbs2019-008_029

9. Reinstall muffler. Refer to procedure in this subsection.

## Inspecting the Exhaust Pipe

Check exhaust pipe for:
– Damages
– Cracks.

Inspect exhaust gasket condition. Replace as required.

## Installing the Exhaust Pipe

The installation is the reverse of the removal procedure.

# EXHAUST SYSTEM (900 ACE AND 900 ACE TURBO)

## SERVICE TOOLS


| Description | Part Number | Page |
|---|---|---|
| SPRING INSTALLER/REMOVER | 529 035 983 | 74 |

*Models without Turbocharger*

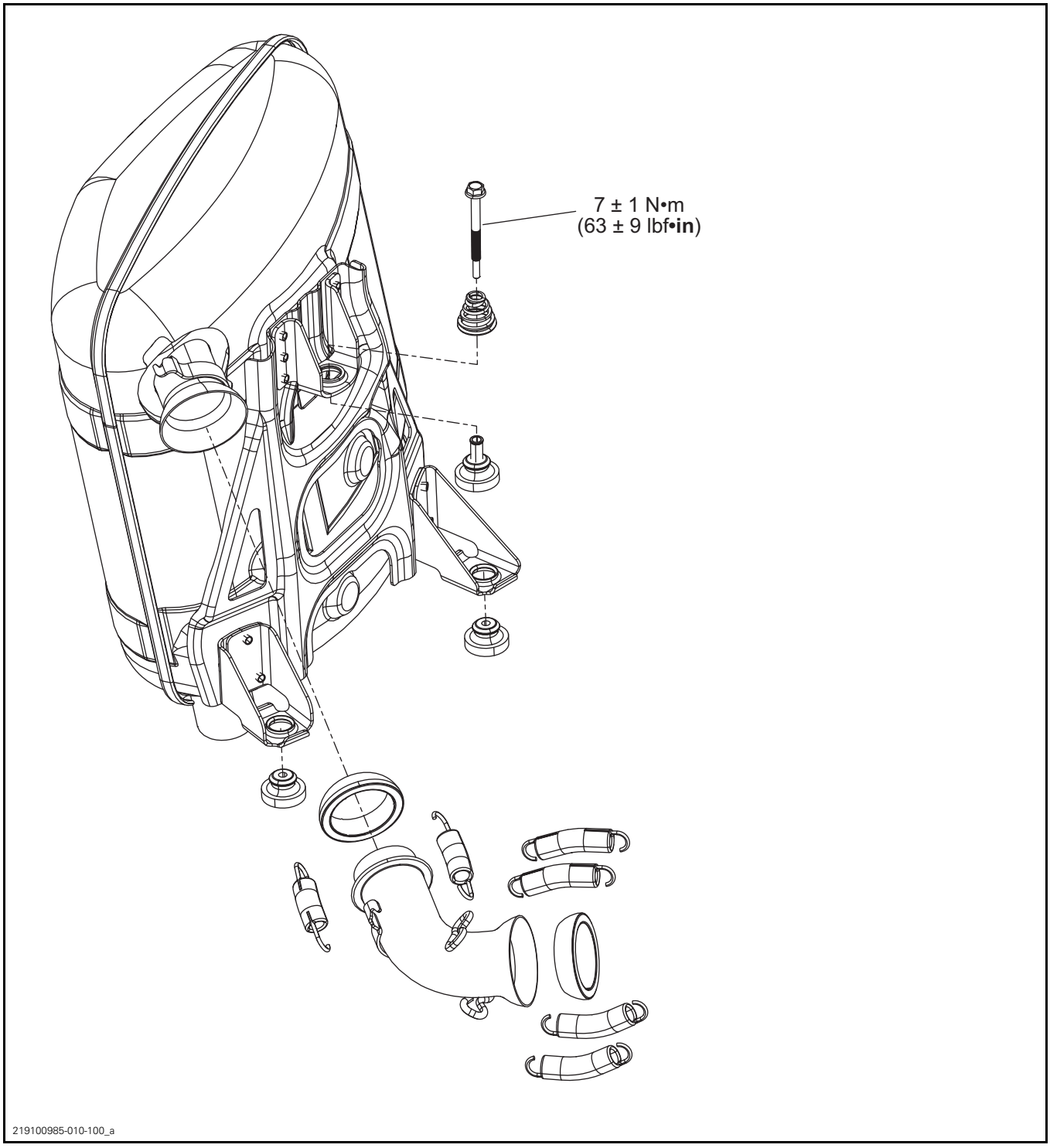

*Models with Turbocharger*

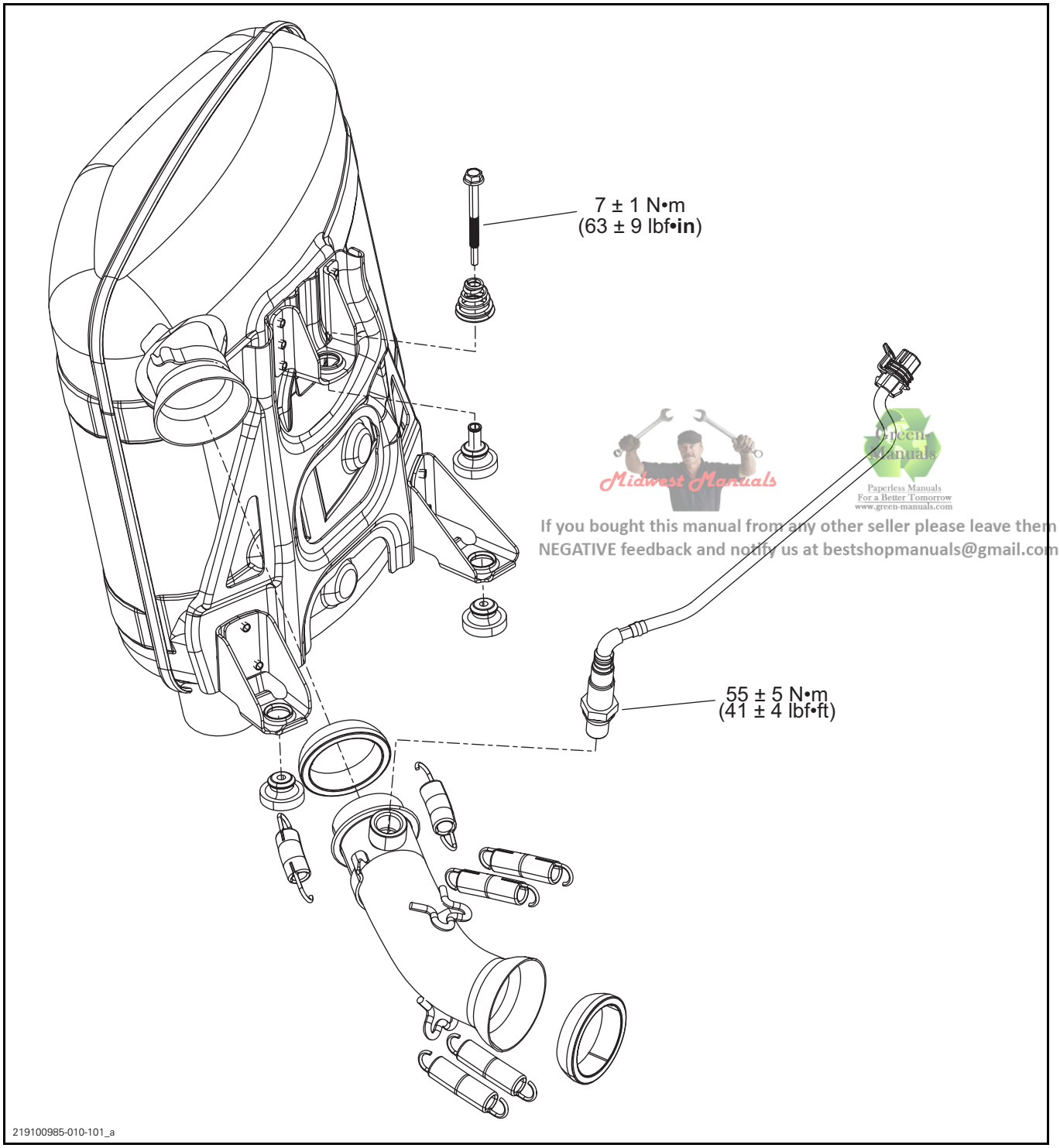


Midwest Manuals
Green Manuals
Paperless Manuals
For a Better Tomorrow
www.green-manuals.com
If you bought this manual from any other seller please leave them
NEGATIVE feedback and notify us at bestshopmanuals@gmail.com

# GENERAL

**⚠ WARNING**

To avoid potential burns, never touch exhaust system components immediately after the engine has been running because these components are very hot. Let engine and exhaust system cool down before performing any servicing.

During assembly/installation, use the torque value and service products as in the exploded view.

**⚠ WARNING**

Torque wrench tightening specifications must be strictly adhered to.
Locking devices (e.g.: locking tabs, elastic stop nuts, self-locking fasteners, cotter pins, etc.) must be replaced with new ones.

# MAINTENANCE

## INSPECTING THE EXHAUST SYSTEM COMPONENTS

Check the following components for leaks, cracks, or other damages:
- Springs and retainers
- Exhaust system mounts
- Muffler
- Exhaust pipe
- Donut gaskets
- Shields
- Manifold.

## REPLACING THE TURBO EXHAUST GASKET (APPLICABLE MODELS)

1. Remove the exhaust pipe. Refer to procedure in this subsection.
2. Replace the exhaust gasket.

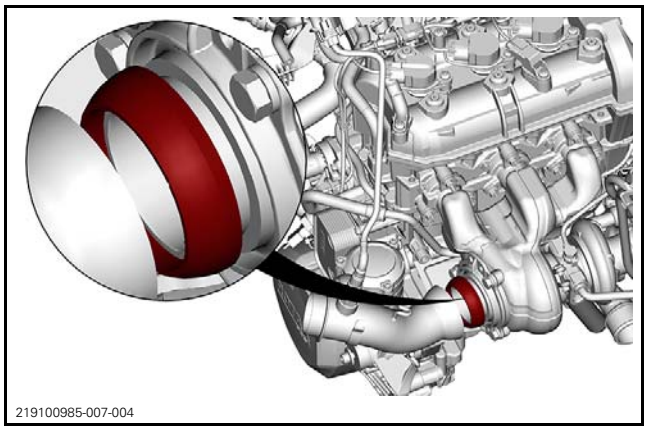
219100985-007-004

# PROCEDURES

## MUFFLER

### Removing the Muffler

1. Remove the upper body module. Refer to *BODY* subsection.
2. Remove exhaust springs retaining the exhaust pipe to the muffler.

| REQUIRED TOOL | |
|---|---|
| SPRING INSTALLER/REMOVER (P/N 529 035 983) |  |

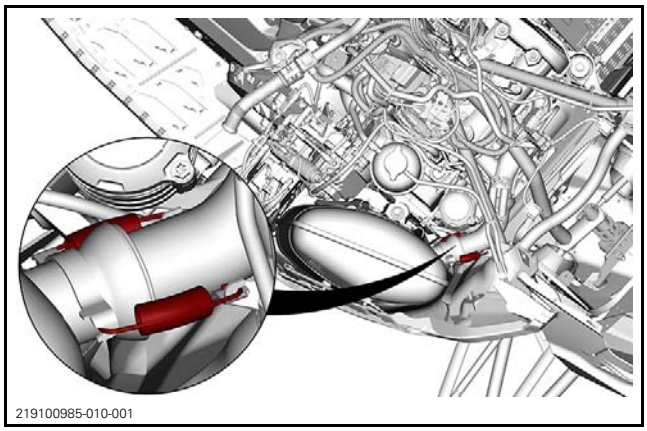
219100985-010-001

3. Behind the muffler, remove the retaining screw and its spring.

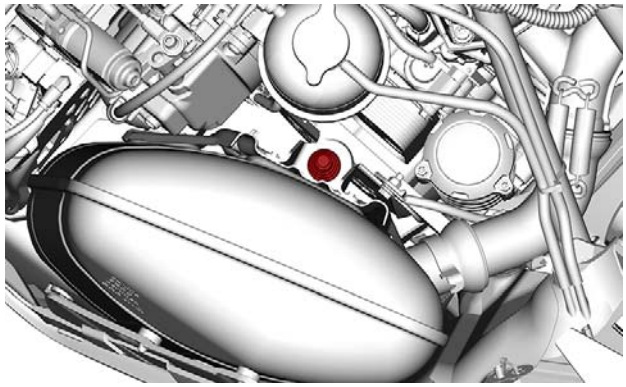
219100985-010-002

4. Remove the muffler.
5. Remove exhaust gasket.

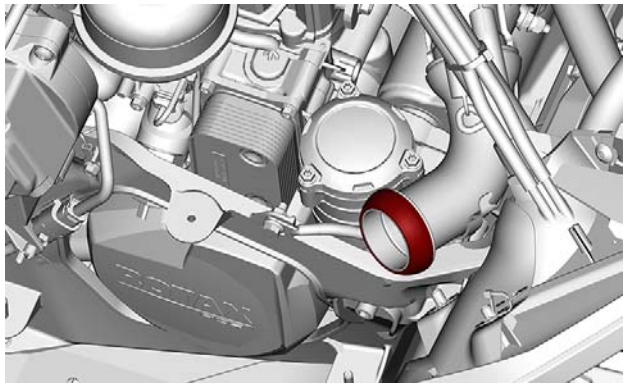
219100985-010-003

## Inspecting the Muffler

Check the muffler for cracks or other damages.

Check grommet condition.

Inspect exhaust gasket condition. Replace as required.

## Installing the Muffler

The installation is the reverse of the removal procedure. However, pay attention to the following.

| TIGHTENING TORQUE | |
|---|---|
| Muffler retaining screw | 7 N•m ± 1 N•m (62 lbf•**in** ± 9 lbf•**in**) |

# EXHAUST PIPE

## Removing the Exhaust Pipe

1. Remove the muffler.

*Models with Turbocharger*

2. Disconnect the oxygen sensor.

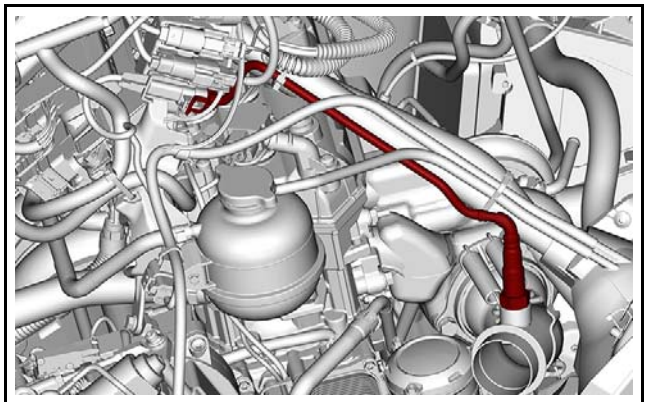
219100985-010-004

*All Models*

3. Remove exhaust springs retaining the exhaust pipe to the exhaust manifold.

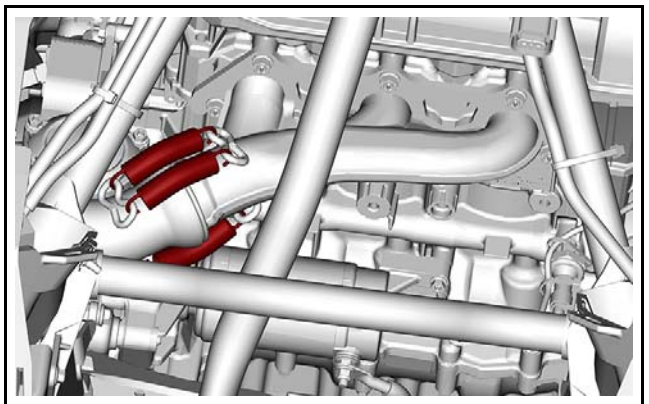
219100985-010-005

*WITHOUT TURBOCHARGER*

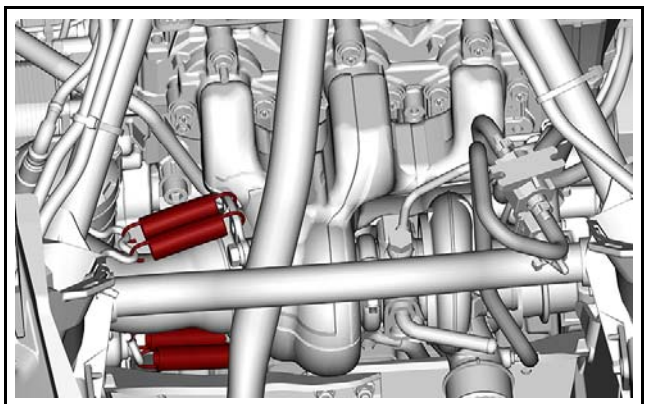
219100985-010-006

*WITH TURBOCHARGER*

4. Remove tuned pipe.
5. Remove exhaust gasket.

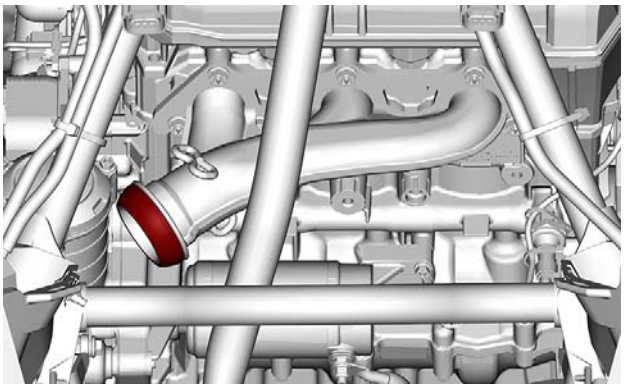
219100985-010-007

## Removing the Heat Shields

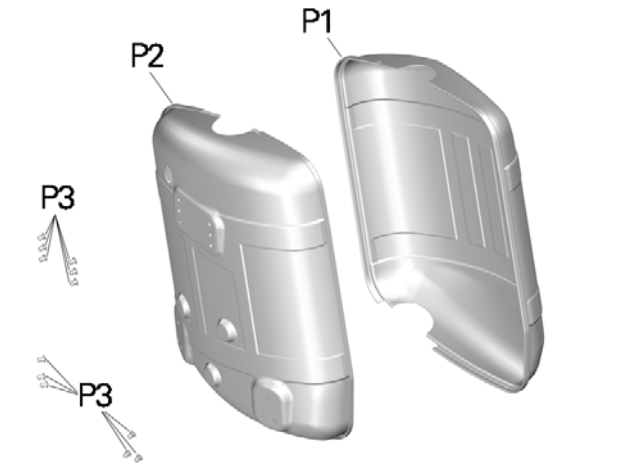

mbs2019-008_016

| ITEM | DESCRIPTION | PART NUMBER | QUANTITY |
|---|---|---|---|
| P1 | RH Deflector | 514055792 | 1 |
| P2 | LH Deflector | 514055707 | 1 |
| P3 | Rivet Avex | 390909100 | 12 |

1. Remove muffler. Refer to procedure in this subsection.
2. Place muffler flat on a work bench.
3. Using a pair of adjustable channel lock pliers, unfold the deflectors lip/edges all around the muffler perimeter as depicted below.


mbs2019-008_003


mbs2019-008_004

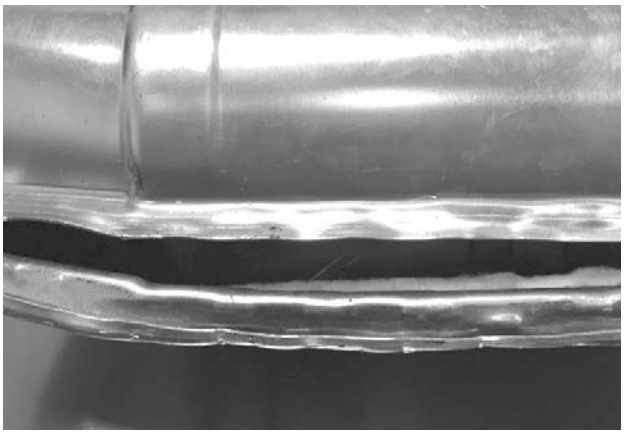
mbs2019-008_009

4. Remove and discard the two deflectors, keeping both insulating wool for reuse.

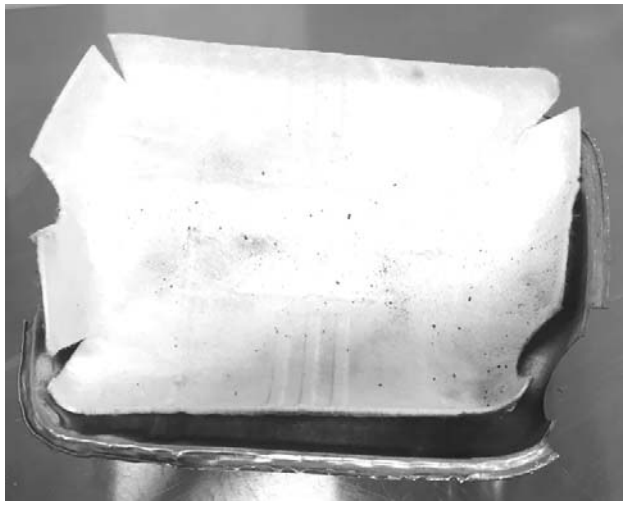
mbs2019-008_010

5. Using a 5 mm (3/16 in) drill bit, drill the rivets that hold the three brackets. Keep all three brackets for reuse.


mbs2019-008_012

*3 brackets*


mbs2019-008_011

## Installing the Heat Shields

1. Put a clean rag on your work bench for protection, reinstall all three brackets on LH deflector **no. P2** using new rivets **no. P3**.


mbs2019-008_030

*Upper center bracket*


mbs2019-008_031

*Lower bracket*

2. Place the new LH deflector face down and insert insulating wool previously removed.


mbs2019-008_018

3. Place muffler into LH deflector.


mbs2019-008_019

4. Place insulating wool previously removed onto muffler and install the new RH deflector **no. P1**.


mbs2019-008_020

5. Start by folding the RH deflector edge onto LH deflector edge at an approximate 60° angle using a nylon head hammer all around the muffler perimeter.

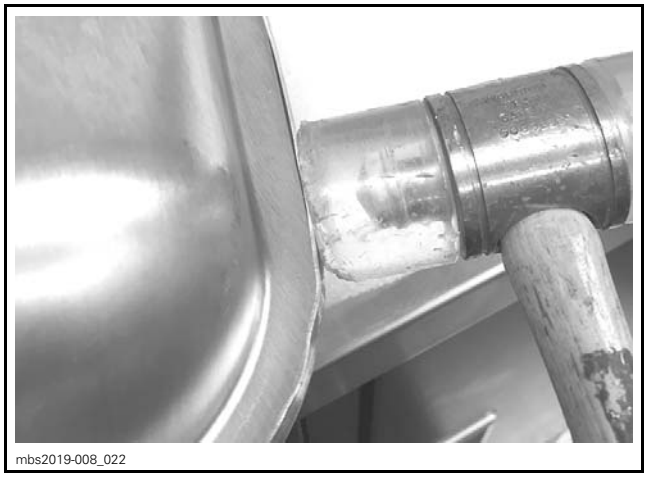
mbs2019-008_022

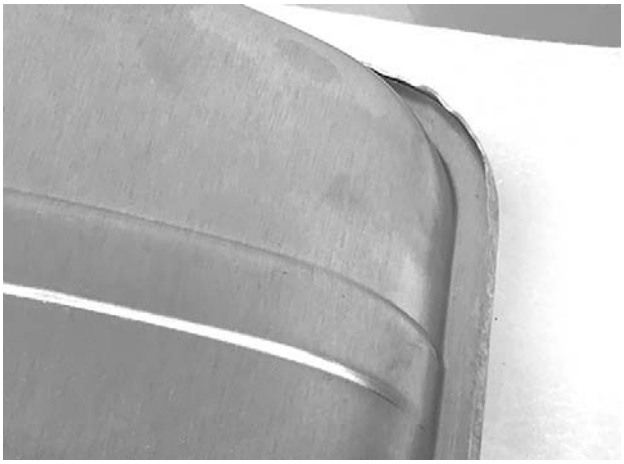
mbs2019-008_024

6. Using a pair of flat nose pliers, fold down flat and squeeze tight the RH deflector edge onto LH deflector edge all around the muffler perimeter.

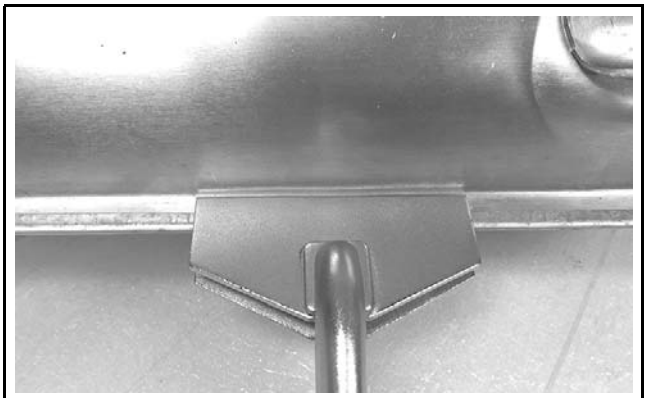
mbs2019-008_026

7. Using a cloth type protective tape, put a few layers of tape around deflectors edge for protection.


mbs2019-008_027

8. Using a steel head hammer, fold up deflector edges up against LH deflector sides, after working around the muffler perimeter, remove the protective tape.


mbs2019-008_028

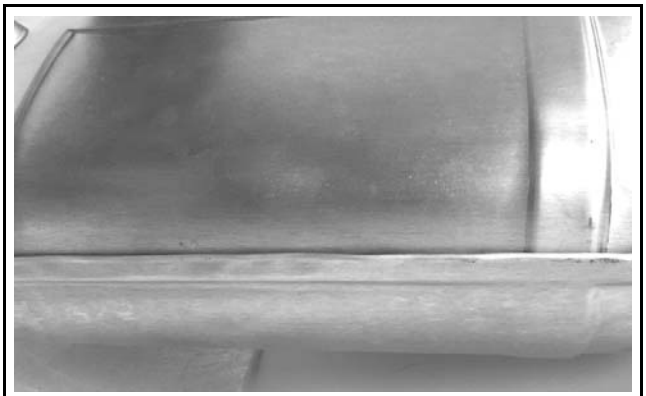
mbs2019-008_029

9. Reinstall muffler. Refer to procedure in this subsection.

## Inspecting the Exhaust Pipe

Check exhaust pipe for:
- Damages
- Cracks.

Inspect exhaust gasket condition. Replace as required.

## Installing the Exhaust Pipe

The installation is the reverse of the removal procedure.

# COOLING SYSTEM - VEHICLE COMPONENTS (EFI AND E-TEC)

## SERVICE TOOLS


| Description | Part Number | Page |
|---|---|---|
| LARGE HOSE PINCHER | 529 032 500 | 87 |
| SMALL HOSE PINCHER | 295 000 076 | 87 |
| TEST CAP | 529 035 991 | 86 |
| VACUUM/PRESSURE PUMP | 529 021 800 | 86 |


## SERVICE PRODUCTS


| Description | Part Number | Page |
|---|---|---|
| EXTENDED LIFE PRE-MIXED COOLANT (EUR) | 779223 | 84 |
| EXTENDED LIFE PRE-MIXED COOLANT | 779150 | 84 |

*With Front Radiator*

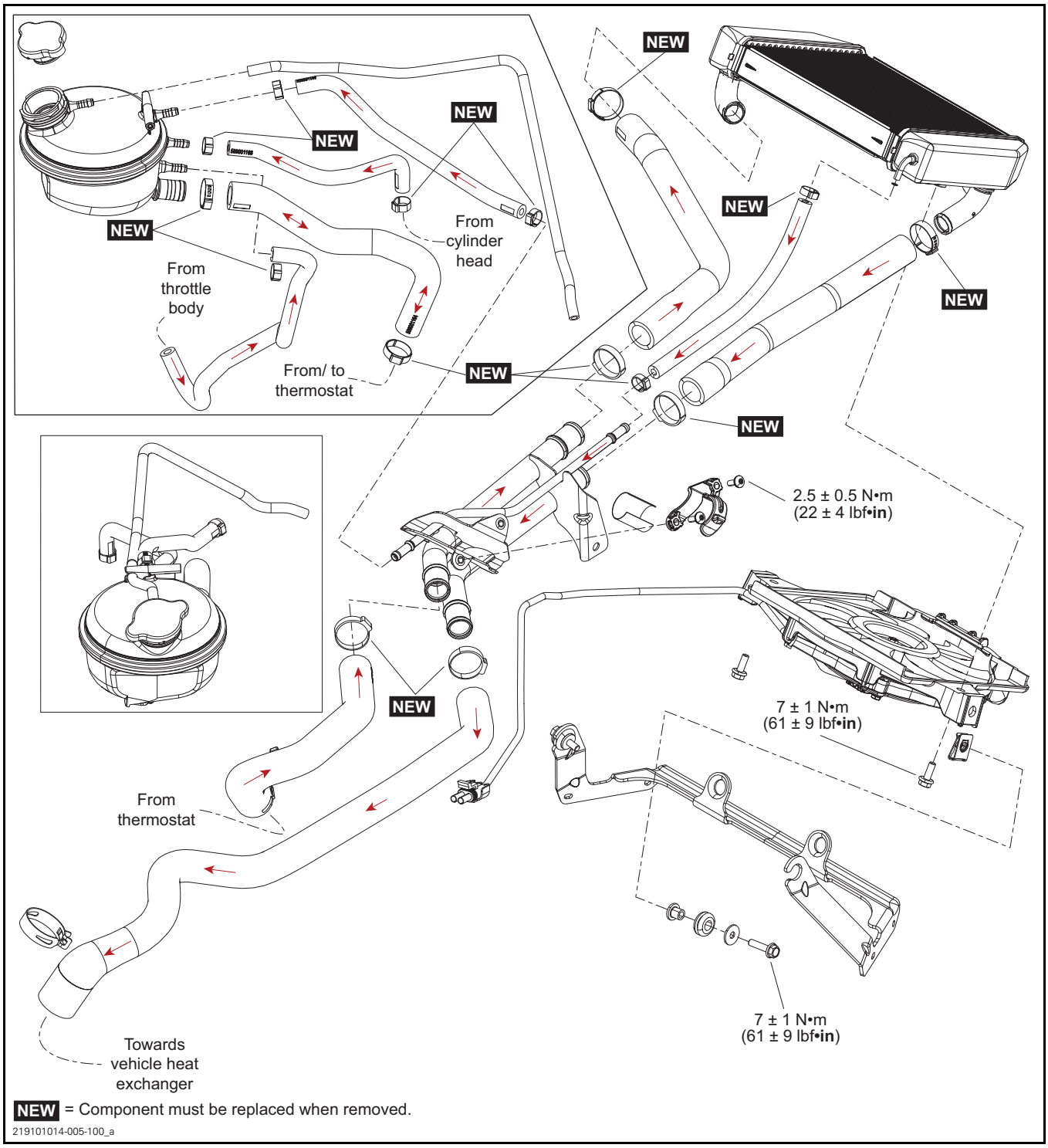

*Without Front Radiator*

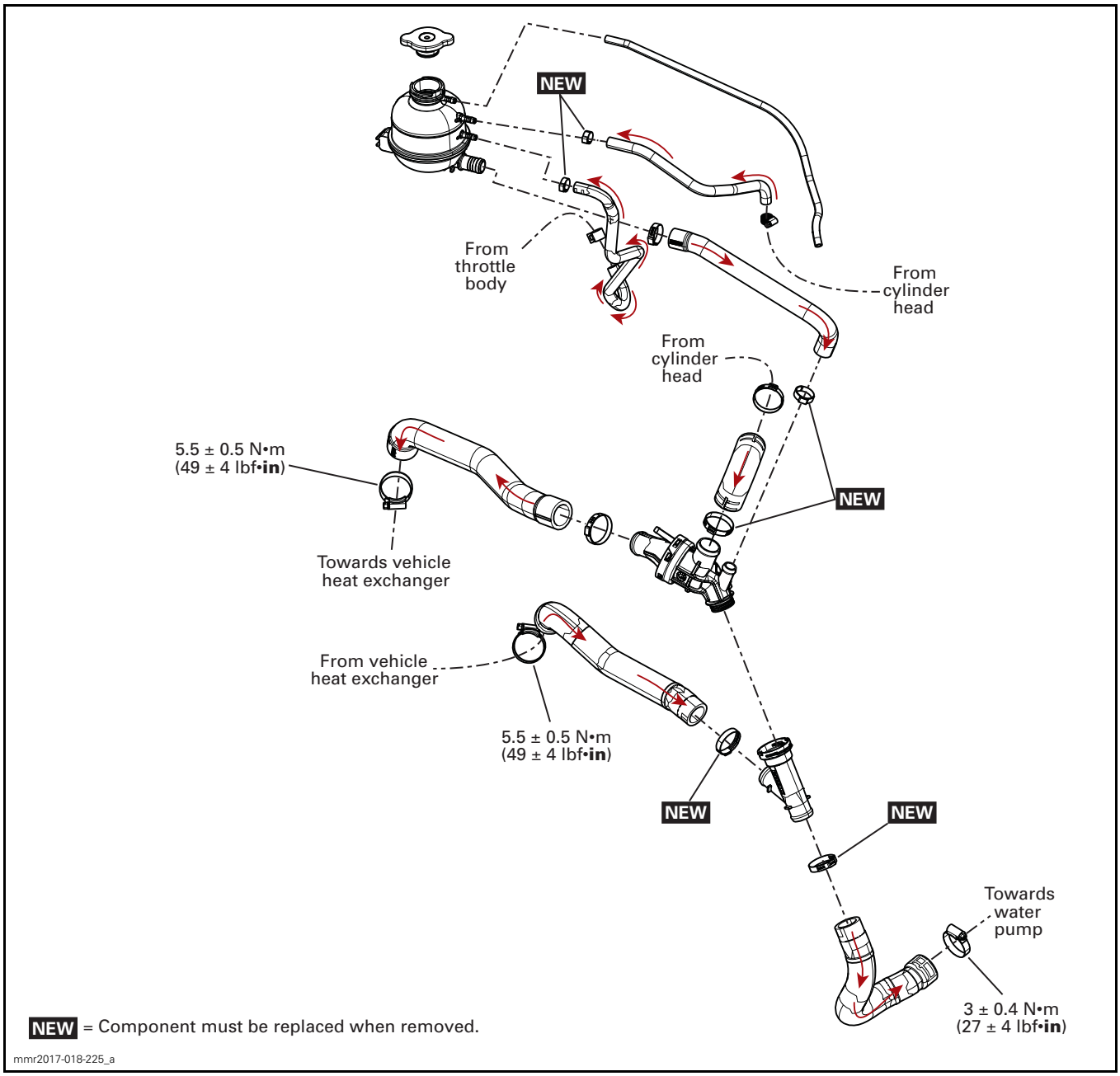

# GENERAL

NOTE: It is a good practice to check for fault codes using BUDS2 software as a first troubleshooting step

During assembly/installation, use torque values and service products as shown in the exploded views.

Clean threads before applying a threadlocker. Refer to *SELF-LOCKING FASTENERS* and *LOCTITE APPLICATION* at the beginning of this manual for complete procedure.

**⚠ WARNING**

**Torque wrench tightening specifications must be strictly adhered to.**
**Locking devices must be replaced with new ones when removed (e.g.: locking tabs, elastic stop nuts, self-locking fasteners, cotter pins, etc.).**

# MAINTENANCE

## COOLING SYSTEM

**⚠ WARNING**

**Never open coolant tank cap when engine is hot.**

### Verifying the Engine Coolant Level

Check coolant level at room temperature with the cap removed. Liquid should be at cold level line (engine cold) of coolant tank.

NOTE: When checking level at low temperature it may be slightly lower then the mark.

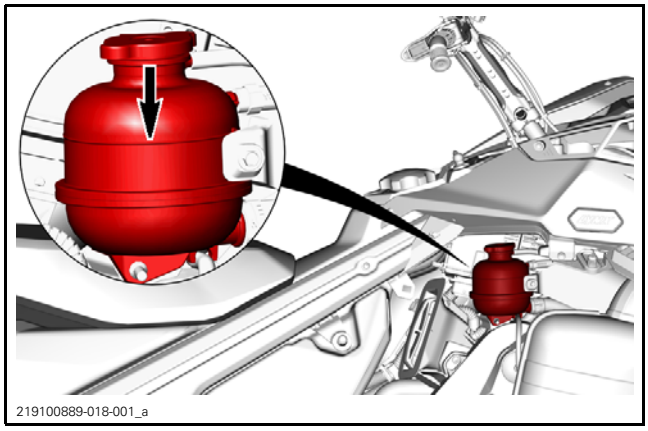


*COLD LEVEL LINE*

### Verifying the Engine Coolant Strength

Remove pressure cap.

Use an antifreeze tester to test coolant strength.

| MINIMUM RECOMMENDED COOLANT STRENGTH |
|---|
| -30°C (-22°F) |

### Replacing the Engine Coolant

Recommended Engine Coolant

| COUNTRY | RECOMMENDED SERVICE PRODUCT |
|---|---|
| Scandinavia | EXTENDED LIFE PRE-MIXED COOLANT (EUR) (P/N 779223) |
| All other countries | EXTENDED LIFE PRE-MIXED COOLANT (P/N 779150) |
| Alternative, or if not available | A blend of 50% distilled water with 50% antifreeze (especially formulated for aluminum engines |

To prevent antifreeze deterioration, always use the same brand. Never mix different brands unless cooling system is completely flushed and refilled.

***NOTICE*** **To prevent rust formation or freezing condition, always replenish the system with the BRP premixed coolant or with 50% antifreeze and 50% distilled water. Do not use tap water, straight antifreeze or straight water in the system. Tap water contains minerals and impurities which build up in the system. During cold weather, straight water causes the system to freeze while straight antifreeze thickens (like slush ice) and does not have the same efficiency. Always use ethylene glycol antifreeze containing corrosion inhibitors specifically recommended for aluminum engines.**

Draining the Cooling System

**⚠ WARNING**

**Never drain or refill the cooling system when engine is hot.**

Remove muffler and tuned pipe. Refer to *EXHAUST SYSTEM* subsection.

Place a large drain pan under the vehicle bottom pan.

Remove coolant hose from water pump to drain coolant.

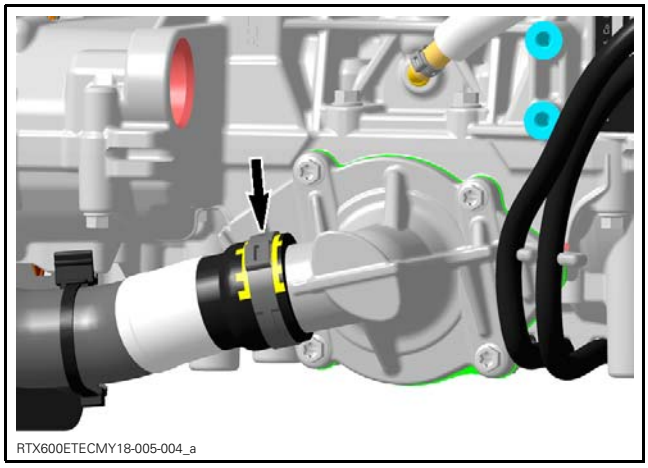


*REMOVE CLAMP (DISCARD ORIGINAL INSTALLED 1–EAR CLAMP)*

When coolant level is low enough, lift the rear of vehicle to drain the heat exchangers.




*TYPICAL*

Install and tighten coolant hose clamp on water pump.

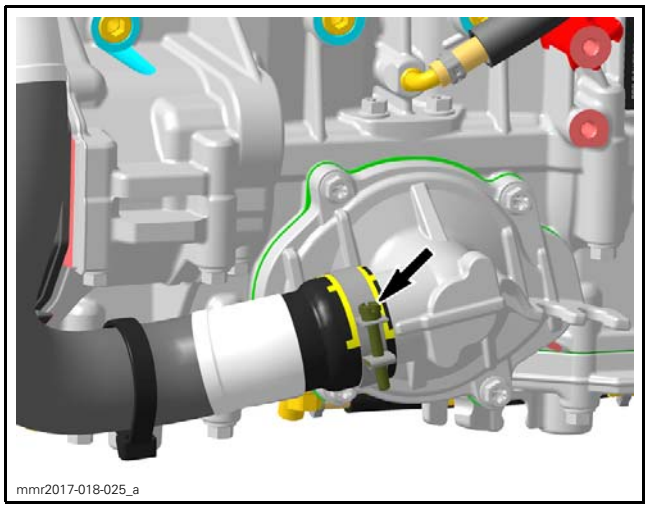


| TIGHTENING TORQUE | |
|---|---|
| Coolant hose clamp | 3 N•m ± 0.4 N•m (27 lbf•**in** ± 4 lbf•**in**) |

### Refilling and Bleeding the Cooling System

1. Apply parking brake.
2. Lift front of vehicle as shown and support it safely.




*TYPICAL*
*A. 25 cm ± 5 cm (10 in ± 2 in)*

3. With engine cold, slowly fill coolant tank up to COLD LEVEL line allowing time for the air in the cooling system to seep out.

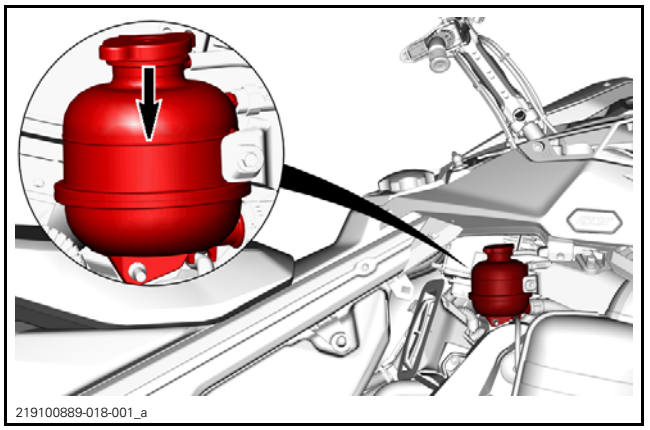


*COLD LEVEL LINE*

4. Start engine.
5. Refill coolant tank up to COLD LEVEL line while engine is idling until rear heat exchangers are warm to the touch (about 4 to 5 minutes).

NOTE: Always monitor coolant level while filling coolant tank to avoid emptying and thus allowing air to enter the system.

6. Install pressure cap.
7. Lower vehicle back to the ground.
8. Lift rear of vehicle and support it safely.



219100985-007-001

*TYPICAL*

**⚠ WARNING**

**Before revving engine, ensure that the track is free of particles which could be thrown out while track is rotating. Keep hands, tools, feet and clothing clear of track. Always lift the snowmobile on a wide-base stand with a rear deflector panel. Ensure no one is standing in close proximity to the snowmobile, especially at the rear of the track. Centrifugal force could cause debris, damaged or loose studs, pieces of torn track, or an entire track to be violently thrown backwards out of the frame with tremendous force, possibly resulting in the loss of a leg or other serious injury.**

9. Remove parking brake.
10. Activate throttle lever 3 - 4 times to bring engine speed to 7000 RPM.
11. Apply the brake.
12. Lower vehicle back to ground.
13. Stop engine.
14. Add coolant up to 15 mm (1/2 in) above the COLD LEVEL line.

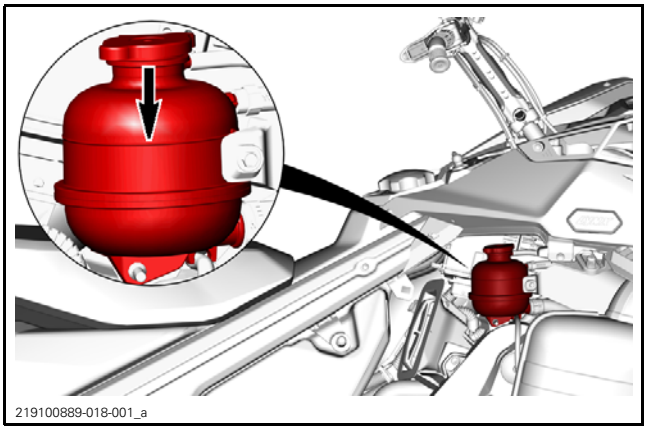
219100889-018-001_a

*COLD LEVEL LINE*

15. When engine has completely cooled down, recheck coolant level in coolant tank and refill up to line if needed.
16. Visual check for any leakages.
17. Perform *VERIFYING THE ENGINE COOLANT STRENGTH*. See procedure in this subsection.
18. Adjust mixture as necessary.
19. Reinstall removed parts.

# INSPECTION

## COOLING SYSTEM LEAK TEST

NOTE: This test confirms if there is a leak in the cooling system, including the engine.

**⚠ WARNING**

**To prevent potential burns, do not remove the coolant tank cap if the engine is hot.**

Remove the RH side panel.

Remove coolant tank cap.

Pressurize system through coolant tank.

| REQUIRED TOOL | |
|---|---|
| TEST CAP (P/N 529 035 991) |  |
| VACUUM/PRESSURE PUMP (P/N 529 021 800) |  |

| TEST PRESSURE |
|---|
| 100 kPa (15 PSI) |

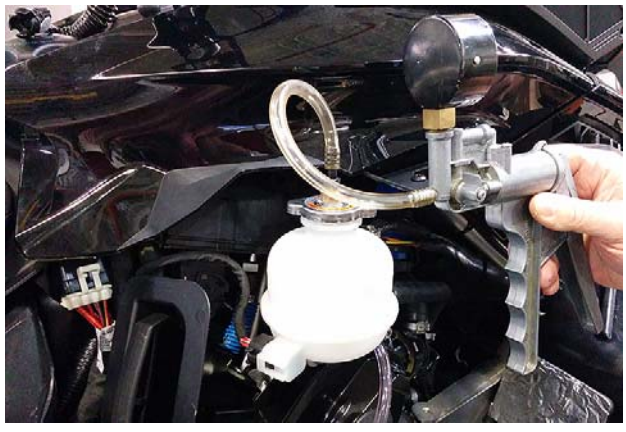
mmr2017-018-200

*TYPICAL*

If pressure drops, check all hoses and engine for coolant leaks. Spray a soap and water solution, and look for air bubbles.

If no external leak is found and pressure drops, carry out the *ENGINE COOLING CIRCUIT LEAK TEST* to find a potential engine internal leak.

# PROCEDURES

## COOLANT TANK CAP

Using a pressure cap tester, check the relief pressure of coolant tank cap as per specification.

| CAP OPENING PRESSURE |
|---|
| 110 kPa (16 PSI) |

If the test failed, replace with a new cap with same specification.

**NOTICE** **Do not install a tank cap exceeding the recommended pressure.**

## COOLANT TANK

### Removing the Coolant Tank

1. Remove the RH side panel.
2. Siphon the coolant tank.
3. Unplug the upper vent hose.

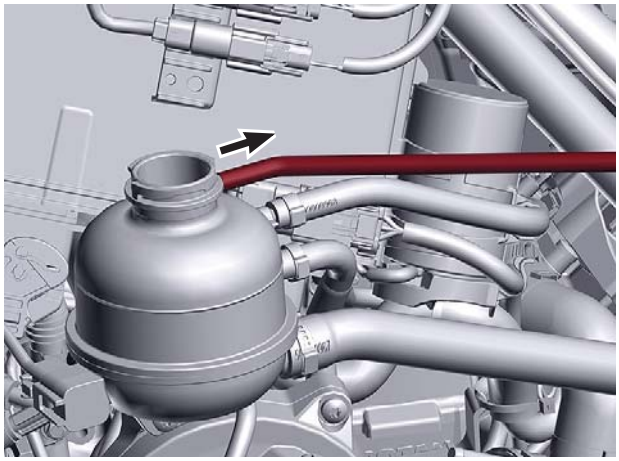

mmr2017-018-210_a

*TYPICAL*

4. Block the three lower coolant hoses with pinchers.

| REQUIRED TOOL | |
|---|---|
| SMALL HOSE PINCHER (P/N 295 000 076) |  |

5. Cut Oetiker clamps and remove coolant hoses from coolant tank.

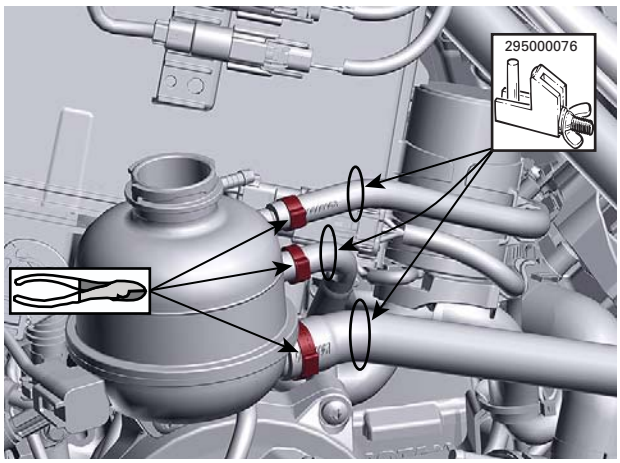


mmr2017-018-208_a

*TYPICAL*

6. Detach the coolant tank from the top of the chaincase.

### Inspecting the Coolant Tank

Check if the tank is cracked or melted. Replace if necessary.

### Installing the Coolant Tank

The installation is the reverse of the removal procedure. However, pay attention to the following.

Properly refill cooling system. Refer to *REFILLING AND BLEEDING THE COOLING SYSTEM* in this subsection.

## FRONT RADIATOR

### Removing the Front Radiator

1. Remove the upper body module. Refer to *BODY* subsection.
2. Cut cooling fan harness locking ties.
3. Disconnect cooling fan connector.
4. Install hose pinchers on radiator inlet and bleeder hoses.

| REQUIRED TOOL | |
|---|---|
| SMALL HOSE PINCHER (P/N 295 000 076) |  |
| LARGE HOSE PINCHER (P/N 529 032 500) |  |

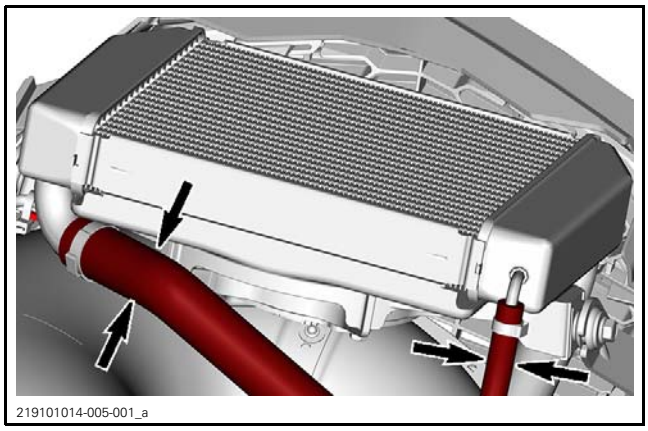
219101014-005-001_a

5. Remove radiator retaining screws.

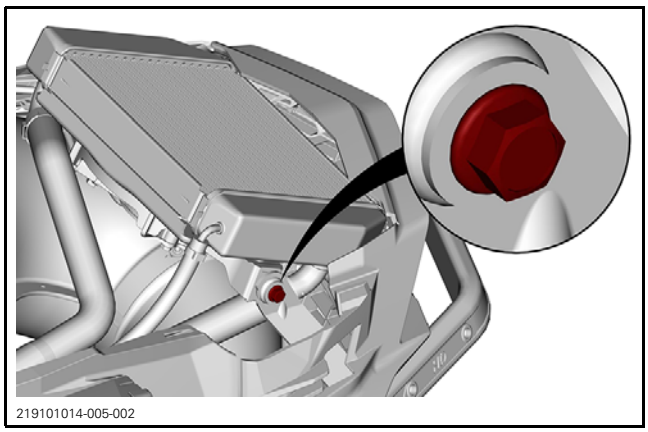
219101014-005-002

6. Pivot radiator on the RH side.
7. Install a hose pincher on the outlet hose.

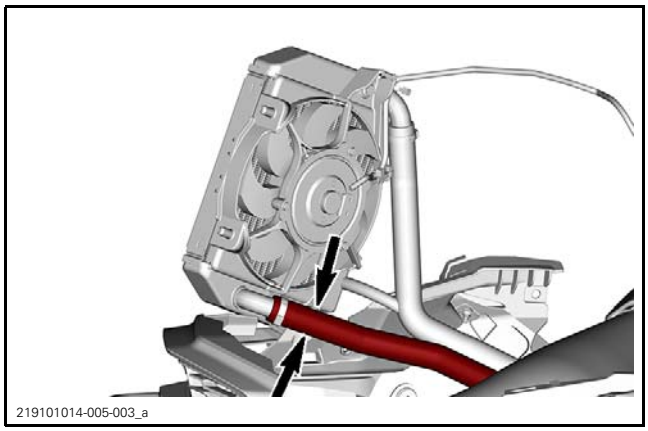
219101014-005-003_a

8. Place a coolant pan under the radiator.
9. Remove and discard Oetiker clamps.
10. Disconnect coolant hoses from radiator.
11. When empty, remove radiator from vehicle.

### Installing the Front Radiator

The installation is the reverse of the removal procedure. However, pay attention to the following.

Install **NEW** Oetiker clamps to secure coolant hoses.

Properly refill cooling system. Refer to *REFILLING AND BLEEDING THE COOLING SYSTEM* in this subsection.

## RADIATOR COOLING FAN

### Radiator Cooling Fan Operation

The ECM controls the radiator cooling fan via the inputs of the coolant temperature sensor (CTS). Refer to the following table.

| ENGINE TEMP. | 65°C (149°F) | 60°C (140°F) | 85°C (185°F) |
|---|---|---|---|
| COOLING FAN | Turns ON | Turn OFF | ON |
| CHECK ENGINE LIGHT | — | — | OFF |
| MESSAGE IN GAUGE | — | — | - Limp Home<br>- Hi Temp |
| LIMP HOME MODE | — | — | Gradual power reduction according to engine temperature. |

If voltage decrease to 11 V and cooling fan is running, the ECM will shut it off. If voltage remains low and coolant temperature reaches 85°C (185°F), the ECM will turn on the cooling fan.

### Cooling Fan Configuration in BUDS2

1. Connect vehicle to the BRP diagnostic software (BUDS2). Refer to *COMMUNICATION TOOLS* subsection.
2. In BUDS2, select the following:
   – **Settings** page
   – **ECM** button.
3. Ensure that **With fan** box is properly checked.

### Testing the Radiator Cooling Fan

1. Connect the vehicle to the BRP diagnostic software (BUDS2). Refer to *COMMUNICATION TOOLS* for procedure and connector location.
2. In BUDS2, go to:
   – **Functions** page
   – **ECM** button
   – **IO Controls** tab.

3. Select **Activate Cooling Fan** action

If fan turns on, check the cooling temperature sensor (CTS). Refer to *ELECTRONIC FUEL INJECTION* subsection.

If fan does not turn on when the **Activate Cooling Fan** button is pressed, refer to the following troubleshooting chart.

| COOLING FAN TROUBLESHOOTING CHART | | |
|---|---|---|
| Is fan working? | YES → | Everything is OK |
| NO ↓ | | |
| Check fan fuse (15A). Is fuse burnt? | YES → | Replace fuse Is fan working? |
| NO ↓ | | |
| Bypass fan relay Refer to *BYPASSING THE RADIATOR FAN RELAY* | | |
| ↓ | | |
| Fan turns? | YES → | Replace relay Is fan working? |
| NO ↓ | | |
| Apply 12 Vdc to fan connector | | |
| ↓ | | |
| Fan turns? | NO → | Replace fan Is fan working? |
| YES ↓ | | |
| Check wiring harness and connectors (Refer to *TESTING THE COOLING FAN CIRCUIT CONTINUITY*) | | |
| ↓ | | |
| Harness and connectors good? | NO → | Repair or replace defective part(s) |
| YES ↓ | | |
| Check CTS (Refer to *ELECTRONIC FUEL INJECTION* subsection) | | |
| ↓ | | |
| CTS works? | NO → | Replace CTS Is fan working? |
| YES ↓ | | |
| Try a new ECM | → | Is fan working? |

## Bypassing the Radiator Fan Relay

1. Remove the fan relay. Refer to *WIRING DIAGRAM* for relay identification.

2. Install a fused jumper wire between relay pins 30 and 87.

## Testing the Radiator Fan Relay

1. Pull on the fan relay without completely removing it. Refer to *WIRING DIAGRAM* for relay identification.
2. Install a fused jumper wire between pin 86 and battery negative (-) post.

If the relay "clicks", it is good.

If the relay does not "click", continue with the following test.

| INPUT VOLTAGE AT COOLING FAN RELAY TEST | | |
|---|---|---|
| FAN RELAY PIN | BATTERY POST | SPECIFICATION |
| 85 | Negative (-) | Battery voltage |
| 87 | | |

If reading is to specification, replace the relay.

If reading is not to specification:

– Check the fuse
– Check the power supply circuit continuity. Refer to *WIRING DIAGRAM*.

## Testing the Cooling Fan Circuit Continuity

If one of the following tests is not to specification, repair the terminals and the wire accordingly.

| COOLING FAN MOTOR POWER CIRCUIT CONTINUITY TEST | | |
|---|---|---|
| FAN CONNECTOR PIN | FUSE BOX TERMINAL | SPECIFICATION |
| B | D6 | Close to 0 Ω |

| COOLING FAN MOTOR GROUND CIRCUIT CONTINUITY TEST | | |
|---|---|---|
| FAN CONNECTOR PIN | BATTERY | SPECIFICATION |
| A | Negative (-) post | Close to 0 Ω |

| COOLING FAN MOTOR CONTROL CIRCUIT CONTINUITY TEST | | |
|---|---|---|
| FUSE BOX TERMINAL | ECM ADAPTER PIN | SPECIFICATION |
| D5 | B-J2 | Close to 0 Ω |

| COOLING FAN MOTOR POWER CIRCUIT CONTINUITY TEST | | |
|---|---|---|
| FUSE BOX TERMINAL | | SPECIFICATION |
| C5 | D4 | Close to 0 Ω |

## Removing the Radiator Cooling Fan

1. Remove the radiator.
2. Remove fan retaining screws.
3. Remove the radiator fan.

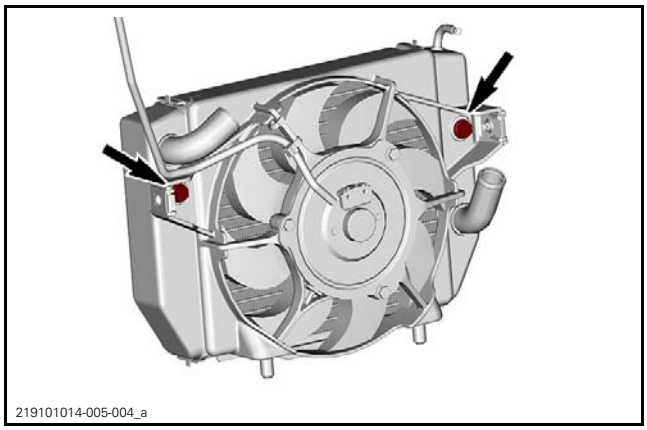


## Installing the Radiator Cooling Fan

The installation is the reverse of the removal procedure.

# COOLING SYSTEM - VEHICLE COMPONENTS (ACE)

## SERVICE TOOLS

| Description | Part Number | Page |
|---|---|---|
| LARGE HOSE PINCHER | 529 032 500 | 97 |

## SERVICE PRODUCTS

| Description | Part Number | Page |
|---|---|---|
| EXTENDED LIFE PRE-MIXED COOLANT | 779150 | 94 |

*Models without Front Radiator*

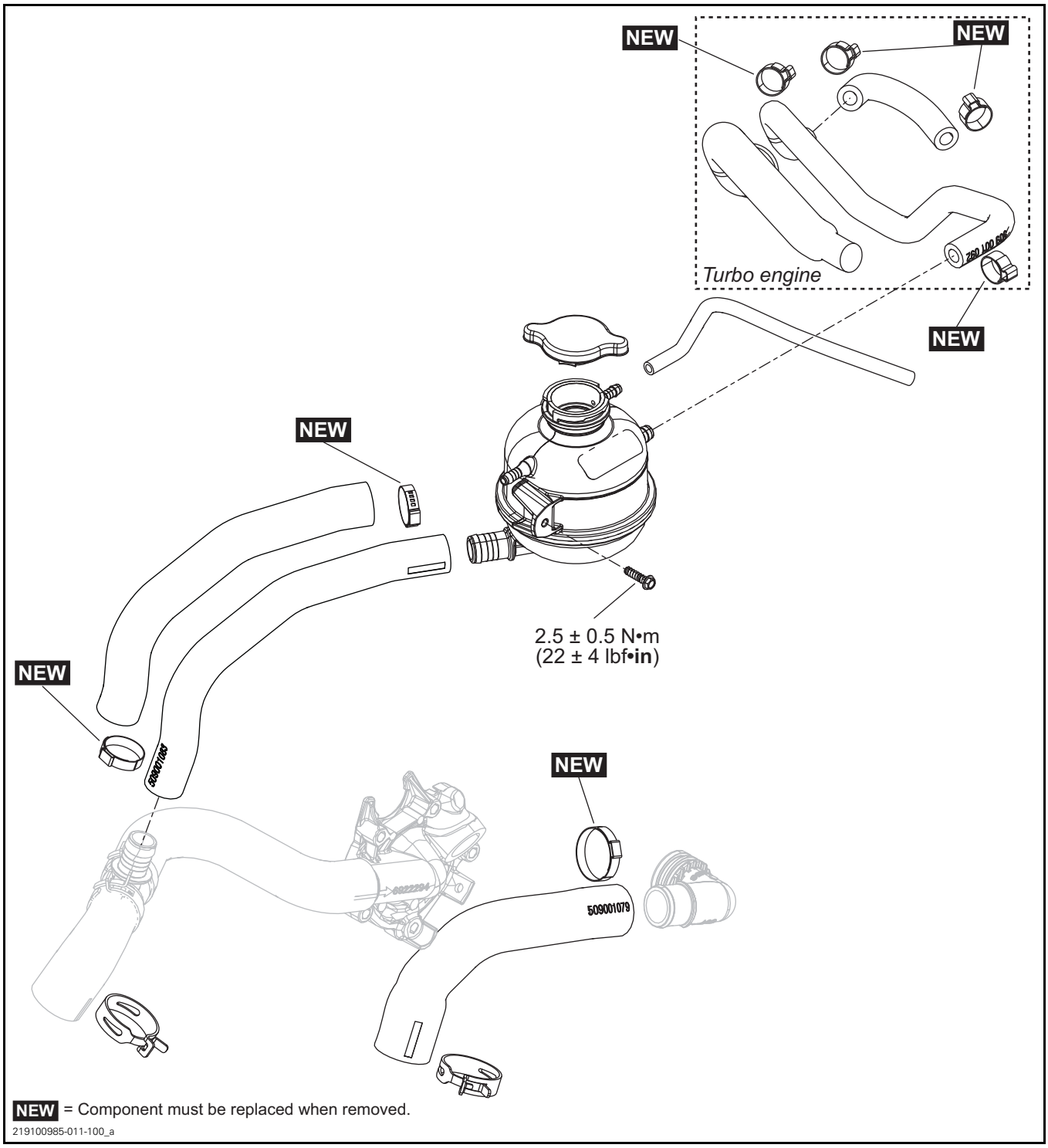

*Models with Front Radiator*

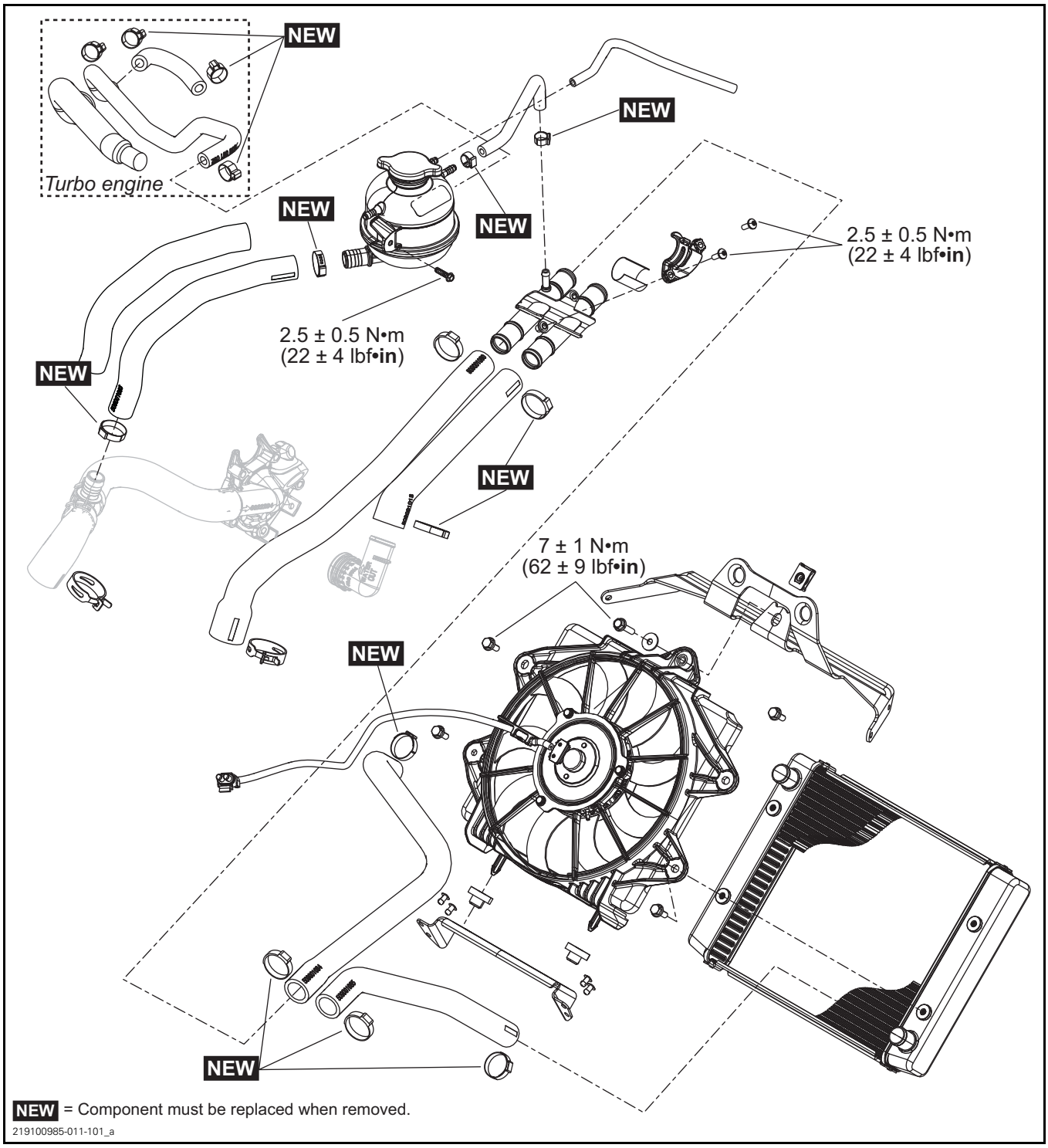

# GENERAL

For a better understanding, some illustrations are taken with engine out of vehicle.

NOTE: It is a good practice to check for fault codes using BUDS2 software as a first troubleshooting step. Refer to the *DIAGNOSTIC AND FAULT CODES* subsection.

During assembly or installation, use the torque values and service products as shown in the exploded views.

Clean threads before applying a threadlocker. Refer to *SELF-LOCKING FASTENERS* and *LOCTITE APPLICATION* at the beginning of this manual for complete procedure.

**⚠ WARNING**

**Torque wrench tightening specifications must strictly be adhered to.**
**Locking devices when removed (e.g.: locking tabs, elastic stop nuts, cotter pin, etc.) must be replaced with new ones.**

***NOTICE*** **Hoses, cables and locking ties removed during a procedure must be reinstalled as per factory standards.**

# MAINTENANCE

**⚠ WARNING**

**Never open coolant tank cap when engine is hot.**

## VERIFYING THE ENGINE COOLANT LEVEL

It is required to remove the upper body module to access the coolant tank cap. Refer to *BODY* subsection.

Check coolant level at room temperature with the cap removed. Liquid should be at cold level line (engine cold) of coolant tank.

NOTE: When checking level at low temperature it may be slightly lower then the mark.

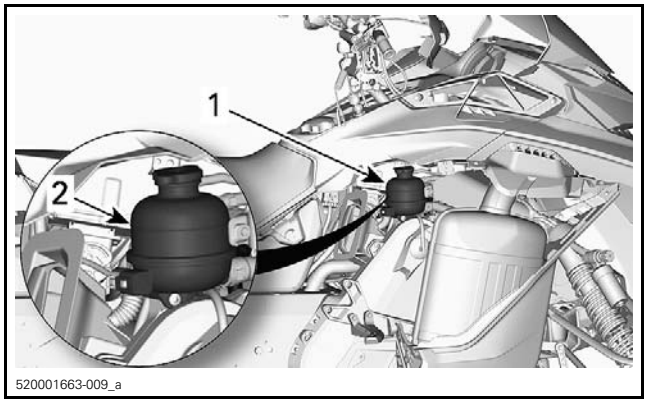


*TYPICAL*
*1. Coolant tank*
*2. COLD LEVEL line*

## VERIFYING THE ENGINE COOLANT STRENGTH

It is required to remove the upper body module to access the coolant tank cap. Refer to *BODY* subsection.

Remove pressure cap.

Use an antifreeze tester to test coolant strength.

| MINIMUM RECOMMENDED COOLANT STRENGTH |
|---|
| -30°C (-22°F) |

## REPLACING THE COOLANT

### Recommended Engine Coolant

| RECOMMENDED SERVICE PRODUCT | ACCEPTABLE |
|---|---|
| EXTENDED LIFE PRE-MIXED COOLANT (P/N 779150) | A blend of 50% distilled water with 50% antifreeze (especially formulated for aluminum engines |

To prevent antifreeze deterioration, always use the same brand. Never mix different brands unless cooling system is completely flushed and refilled.

**NOTICE** To prevent rust formation or freezing condition, always replenish the system with the BRP premixed coolant or with 50% antifreeze and 50% distilled water. Do not use tap water, straight antifreeze or straight water in the system. Tap water contains minerals and impurities which build up in the system. During cold weather, straight water causes the system to freeze while straight antifreeze thickens (like slush ice) and does not have the same efficiency. Always use ethylene glycol antifreeze containing corrosion inhibitors specifically recommended for aluminum engines.

## Draining the Cooling System

**⚠ WARNING**

Never drain or refill the cooling system when engine is hot.

1. Remove body parts as required to access to the water pump.
2. Place a large drain pan under the vehicle bottom pan.
3. Remove drain screw at water pump to drain coolant.

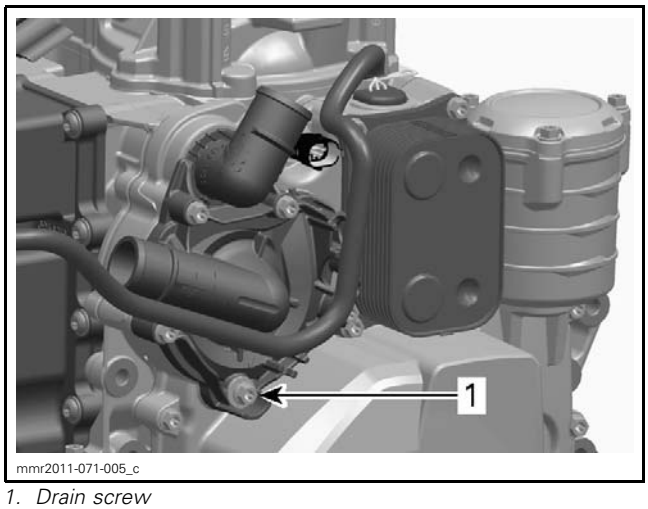


*1. Drain screw*

4. Remove coolant reservoir cap slowly.
5. When coolant level is low enough, lift the rear of vehicle to drain the heat exchangers.




*TYPICAL*

6. Install NEW sealing washer on drain screw.
7. Tighten drain screw to specification.

| TIGHTENING TORQUE | |
|---|---|
| Drain screws | 9 N•m ± 1 N•m (80 lbf•**in** ± 9 lbf•**in**) |

## Refilling and Bleeding the Cooling System

1. Apply parking brake.
2. Lift front of vehicle as shown and support it safely.




*TYPICAL*
*A. 25 cm ± 5 cm (10 in ± 2 in)*

3. Refill coolant tank up to COLD LEVEL line.

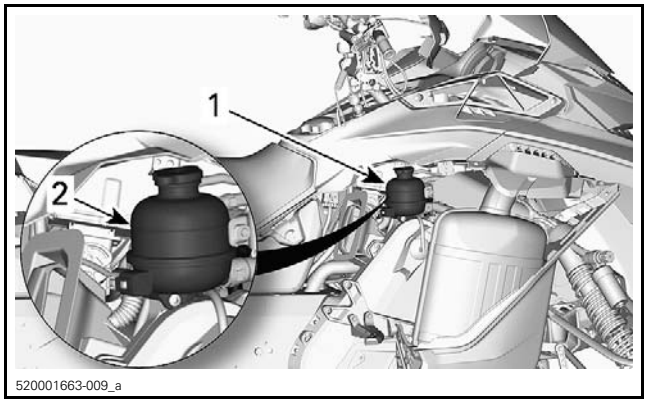


*TYPICAL*
*1. Coolant tank*
*2. COLD LEVEL line*

4. Start engine.

5. Refill up to line while engine is idling until rear heat exchangers are warm to the touch (about 4 to 5 minutes).

NOTE: Always monitor coolant level while filling coolant tank to avoid emptying and thus allowing air to enter the system.

6. Install pressure cap.
7. Lower vehicle back on the ground.
8. Lift rear of vehicle and support it safely.




*TYPICAL*

**⚠ WARNING**

**Before revving engine, ensure that the track is free of particles which could be thrown out while track is rotating. Keep hands, tools, feet and clothing clear of track. Always lift the snowmobile on a wide-base stand with a rear deflector panel. Ensure no one is standing in close proximity to the snowmobile, especially at the rear of the track. Centrifugal force could cause debris, damaged or loose studs, pieces of torn track, or an entire track to be violently thrown backwards out of the frame with tremendous force, possibly resulting in the loss of a leg or other serious injury.**

9. Remove parking brake.
10. Activate throttle lever 3 - 4 times to bring engine speed to 7000 RPM.
11. Apply the brake.
12. Lower vehicle back on ground.
13. Stop engine.
14. Add coolant up to 15 mm (1/2 in) above the COLD LEVEL line.

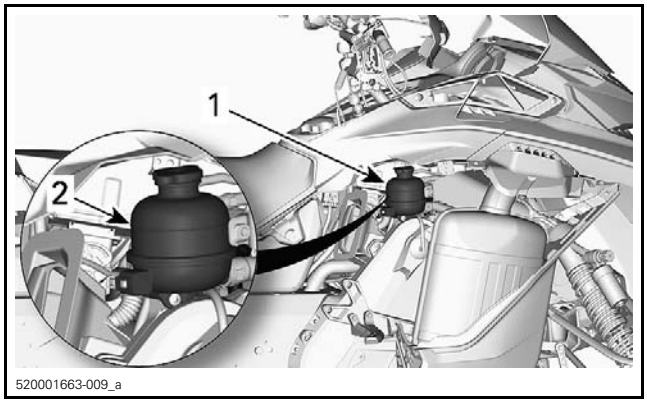


*TYPICAL*
*1. Coolant tank*
*2. Coolant 15 mm (1/2 in) above COLD LEVEL line*

15. When engine has completely cooled down, recheck coolant level in coolant tank and refill up to line if needed.
16. Perform *VERIFYING THE ENGINE COOLANT STRENGTH*. Refer to procedure in this subsection.
17. Adjust mixture as necessary.
18. Reinstall removed parts.
19. Run vehicle a few minutes then recheck coolant level.

# PROCEDURES

## COOLANT RESERVOIR CAP

### Testing the Coolant Reservoir Cap

Using a pressure cap tester, check the efficiency of coolant reservoir cap. If the efficiency is weak, replace the cap.

| CAP OPENING PRESSURE |
|---|
| 110 kPa (16 PSI) |

## COOLANT RESERVOIR

### Removing the Coolant Reservoir

1. Remove the upper body module. Refer to *BODY* subsection.
2. Siphon coolant reservoir.
3. Disconnect coolant hoses from reservoir.
4. Remove coolant reservoir from vehicle.

### Inspecting the Coolant Reservoir

Check if the reservoir is cracked or melted. Replace if necessary.

### Installing the Coolant Reservoir

The installation is the reverse of the removal procedure. However, pay attention to the following.

Install **NEW** Oetiker clamps.

Refill and bleed cooling system as described in *MAINTENANCE*.

## FRONT RADIATOR (IF EQUIPPED)

### Removing the Front Radiator

1. Remove the upper body module. Refer to *BODY* subsection.

*With Intercooler*

2. Remove the intercooler. Refer to *INTERCOOLER* subsection.
3. Cut cooling fan harness locking ties.

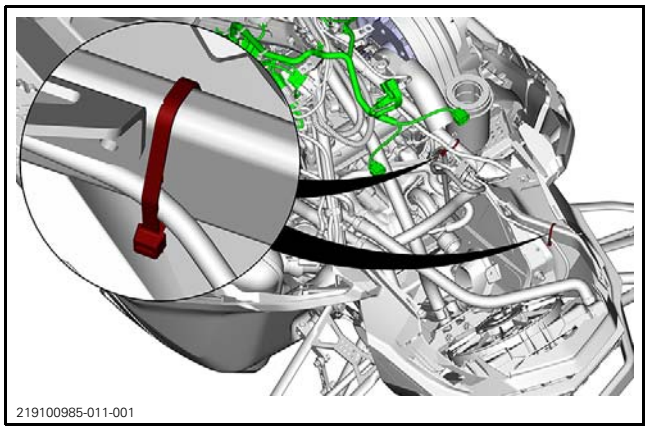


4. Disconnect front radiator cooling fan connector.
5. Install hose pincher on both radiator hoses.

| REQUIRED TOOL | |
|---|---|
| LARGE HOSE PINCHER (P/N 529 032 500) |  |

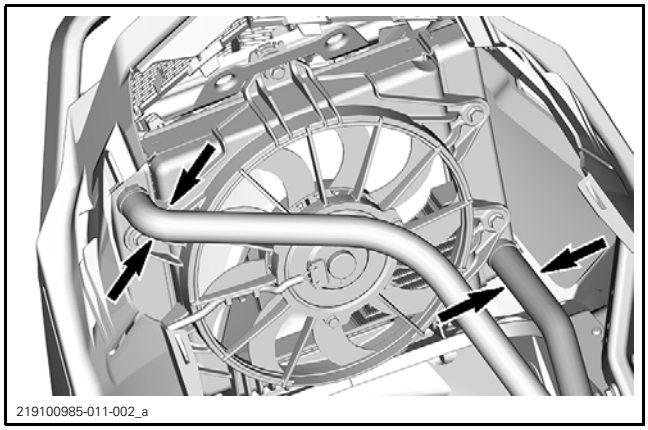


6. Remove Oetiker clamps and discard.
7. Disconnect upper coolant hose from radiator.

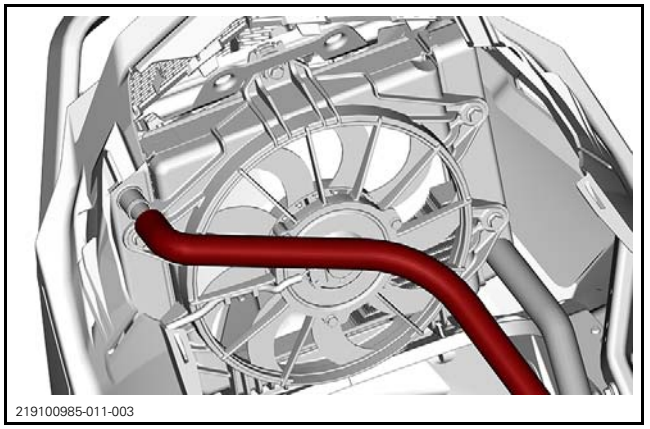


8. Siphon coolant from radiator.
9. Disconnect lower coolant hose from radiator.

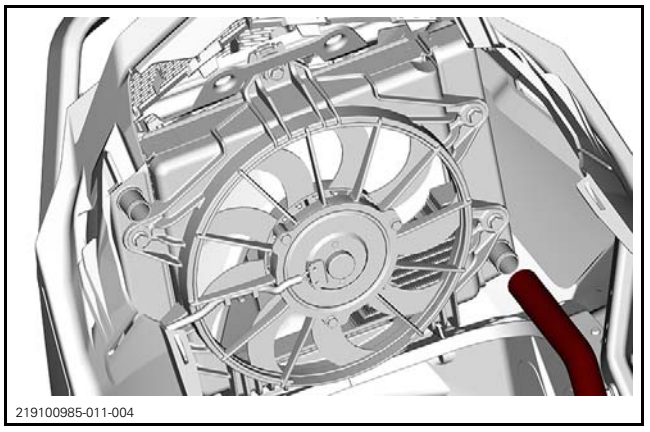


10. Remove screw securing the radiator shroud to frame.

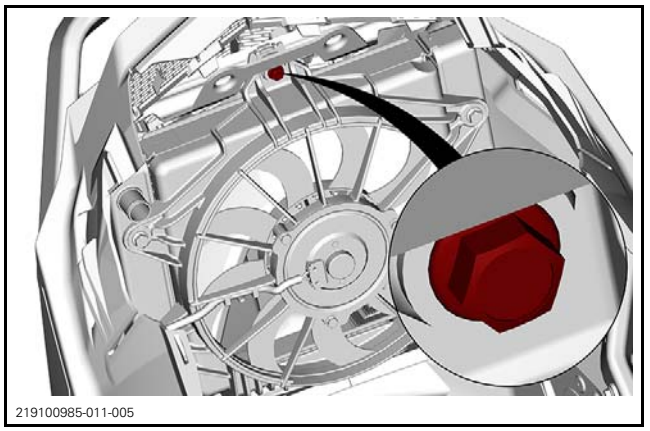


11. Remove front radiator assembly from vehicle.
12. Remove screws securing radiator to shroud.

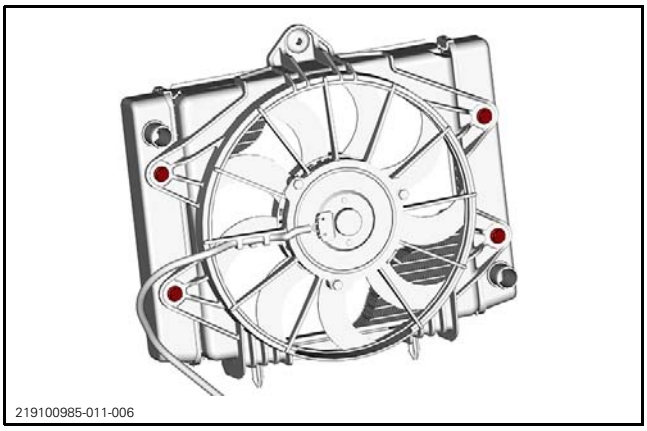


### Installing the Front Radiator

The installation is the reverse of the removal procedure. However, pay attention to the following.

Install **NEW** Oetiker clamps to secure coolant hoses.

## COOLING FAN

### Cooling Fan Operating Condition

| RADIATOR COOLING FAN | | |
|---|---|---|
| ENGINE TEMPERATURE | COOLING FAN RELAY | COOLING FAN OPERATION |
| > 100°C (212°F) | Close | Starts |
| < 95°C (203°F) | Open | Stops |

NOTE: If voltage decrease to 11 V and cooling fan is running, the ECM will shut it off. If voltage remains low and coolant temperature reaches 118°C (244°F), the ECM will turn on the cooling fan.

### Cooling Fan Configuration in BUDS2

1. Connect vehicle to the BRP diagnostic software (BUDS2). Refer to *COMMUNICATION TOOLS AND B.U.D.S.* subsection.
2. In BUDS2, select the following:
   - **Settings** page
   - **ECM** button.
3. Ensure that **With fan** box is properly checked.

### Testing the Cooling Fan Motor Operation

1. Go to:
   - **Functions** page
   - **ECM** button.
2. Press **Cooling Fan** button to activate cooling fan motor.
3. If cooling fan motor does not work, continue with *COOLING FAN TESTING SEQUENCE*.

### Cooling Fan Testing Sequence

If BUDS2 is properly configured and cooling fan does not work, follow this testing sequence to diagnose problem.

1. Check cooling fan connector and terminal condition.
2. Check cooling fan fuse.
   - Refer to *POWER DISTRIBUTION*.
3. Check cooling fan relay.
   - Refer to *POWER DISTRIBUTION*.
4. Check cooling fan motor operation.
   - Refer to *TESTING THE COOLING FAN MOTOR OPERATION*.
5. Check input voltage at cooling fan motor.

NOTE: Engine must be started and engine temperature must be > 100°C (212°F).

| INPUT VOLTAGE AT COOLING FAN MOTOR | |
|---|---|
| TEST PROBES | VOLTAGE |
| Pin B | Battery voltage (±12 Vdc) |
| Pin A | |

6. Check input voltage at cooling fan relay.

| INPUT VOLTAGE AT COOLING FAN RELAY | |
|---|---|
| TEST PROBES | VOLTAGE |
| Pin 85 | Battery voltage (±12 Vdc) |
| Battery negative (-) post | |

| INPUT VOLTAGE AT COOLING FAN RELAY | |
|---|---|
| TEST PROBES | VOLTAGE |
| Pin 30 | Battery voltage (±12 Vdc) |
| Battery negative (-) post | |

7. Check ECM ground continuity test (relay).

| ECM GROUND CONTINUITY TEST (RELAY) | |
|---|---|
| TEST PROBES | VOLTAGE |
| ECM-B pin J4 | Close to 0 Ω |
| Relay pin 86 | |

# INTERCOOLER

## SERVICE TOOLS

| Description | Part Number | Page |
|---|---|---|
| VACUUM/PRESSURE PUMP | 529 021 800 | 100 |

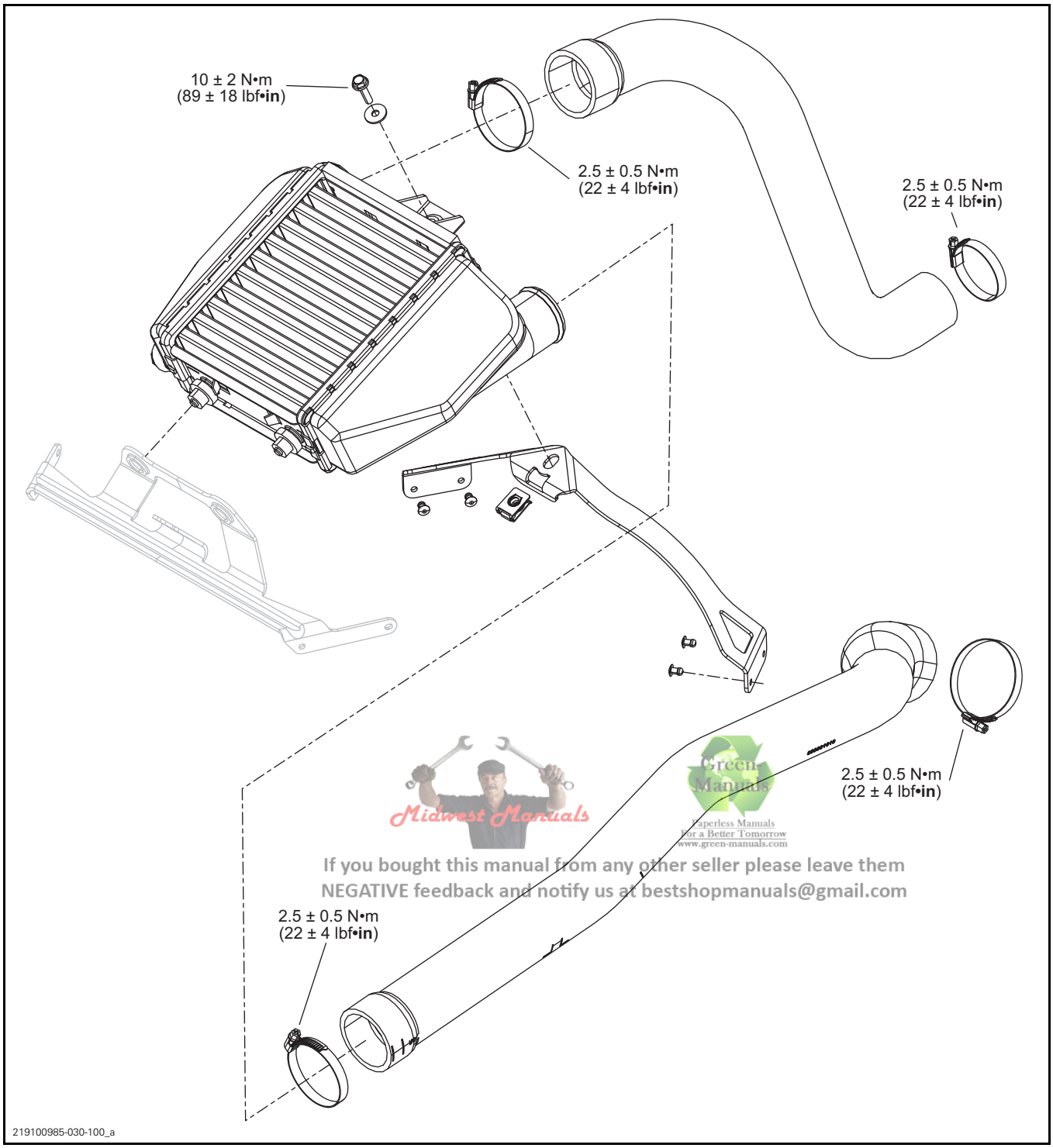


Midwest Manuals
Green Manuals
Paperless Manuals For a Better Tomorrow www.green-manuals.com
If you bought this manual from any other seller please leave them NEGATIVE feedback and notify us at bestshopmanuals@gmail.com

# GENERAL

An exhaust gas turbocharger heats the air that it compresses.

The intercooler cools the hot compressed air from the compressor outlet.

# INSPECTION

NOTE: When vehicle is running at operating temperature, intercooler outlet air temperature should be lower than inlet air temperature. The temperature difference will vary with atmospheric conditions.

Check radiating fins for clogging or damage.

Remove any obstructions with compressed air or low pressure water.

## Leak Test

| REQUIRED TOOL | |
|---|---|
| VACUUM/PRESSURE PUMP (P/N 529 021 800) |  |

Block outlet hose.

Unplug the inlet hose from the intercooler.

Install the pressure pump with an adaptor on the inlet fitting.

Pressurize the intercooler.

***NOTICE*** **Testing at higher pressures can damage the system.**

| PRESSURE TEST |
|---|
| 100 kPa (14.5 PSI) for 2 minutes minimum |

If there is a pressure drop, first spray tool, hoses and adapters with a soapy water solution to ensure they are not leaking. If they are not leaking, replace the intercooler.

# PROCEDURES

## INTERCOOLER ACCESS

Remove the upper body module. Refer to *BODY* subsection.

## REMOVING THE INTERCOOLER

***NOTICE*** **When removing the intercooler, always plug the turbocharger hoses with clean rags to prevent dirt from entering the turbo.**

1. Cut locking tie securing outlet hose.

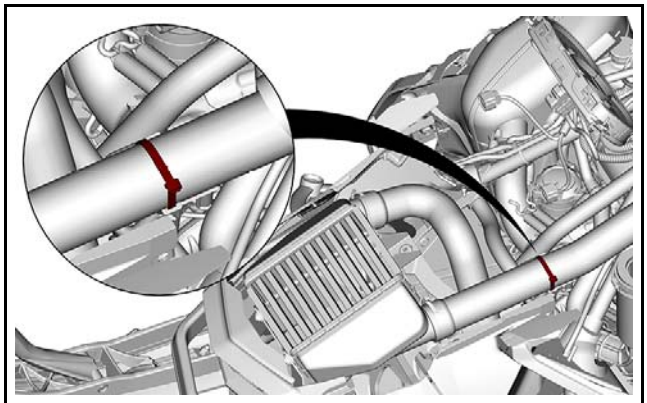
219100985-030-003

2. Loosen the clamps and disconnect both intercooler hoses.

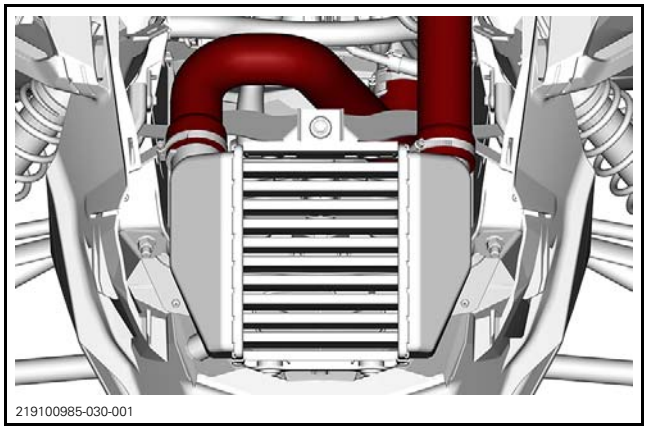
219100985-030-001

3. Remove the intercooler retaining screws.

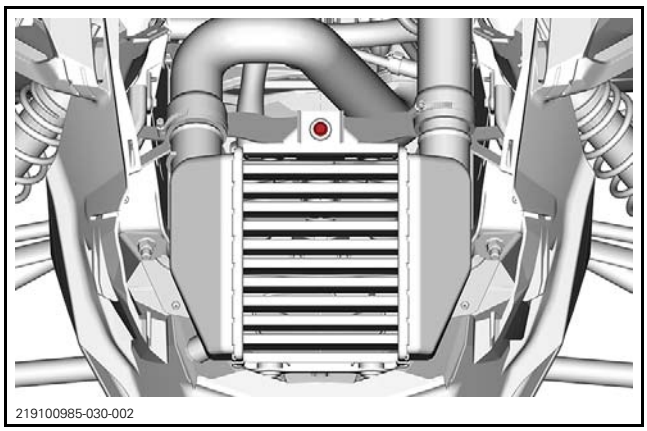
219100985-030-002

4. Remove intercooler.

# INSTALLING THE INTERCOOLER

The installation is the reverse of the removal procedure.

# ENGINE MANAGEMENT SYSTEM (EMS) - EFI

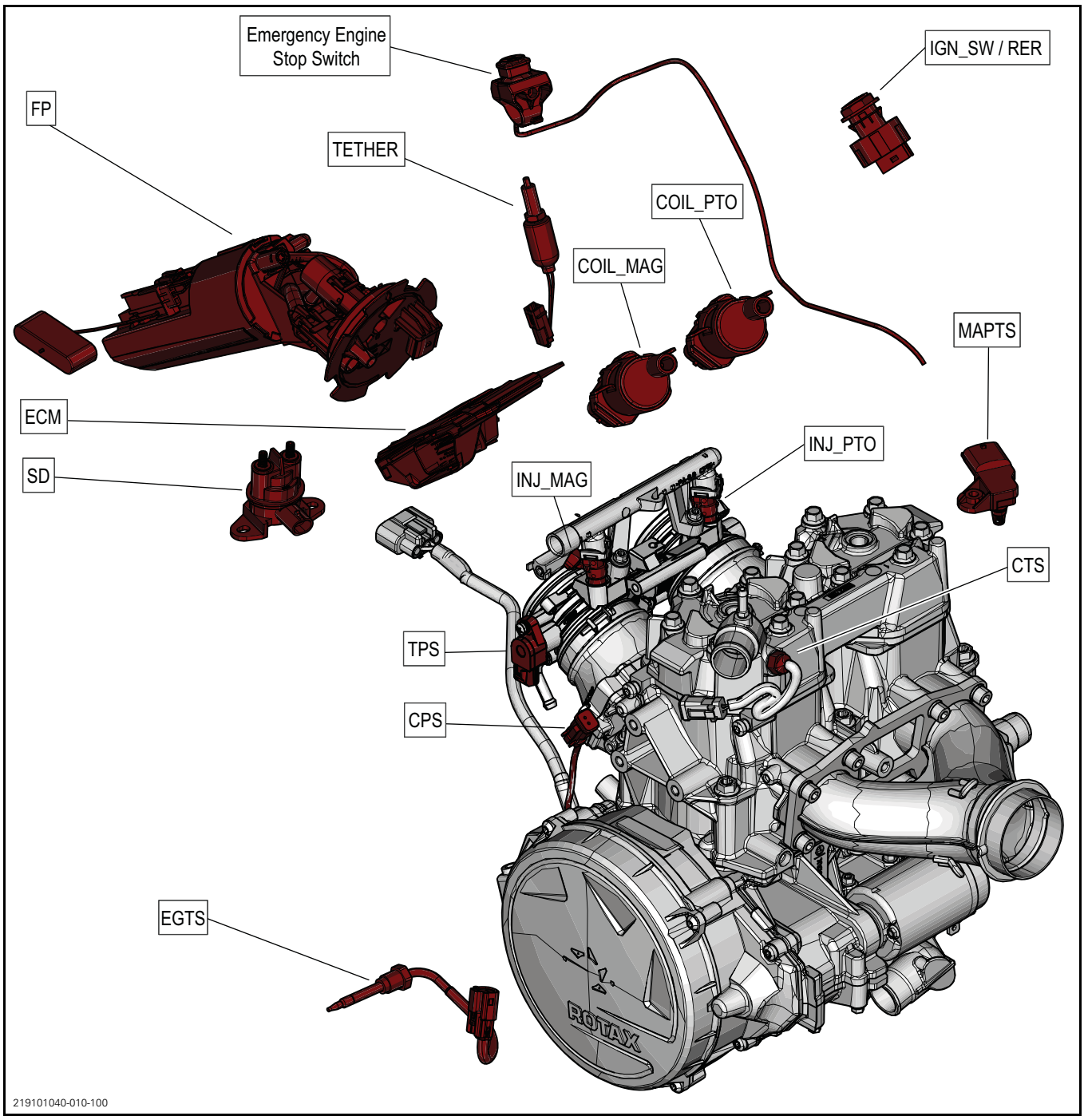

# GENERAL

| ACRONYM | DEFINITION |
|---|---|
| COILS | Ignition Coils |
| CPS | Crankshaft Position Sensor |
| CTS | Coolant Temperature Sensor |
| ECM | Engine Control Module |
| EGTS | Exhaust Gas Temperature Sensor |
| FP | Fuel Pump |
| IGN SW | Ignition Switch |
| INJ MAG | Fuel Injector (Mag Side) |
| INJ PTO | Fuel Injector (PTO Side) |
| MAPTS | Manifold (intake) Air Pressure / Temperature Sensor |
| RER | Rotax Electronic Reverse |
| SD | Starter Solenoid |
| TPS | Throttle Position Sensor |

## SYSTEM DESCRIPTION

The Engine Control Module (ECM) ensures a high power output with a clean combustion with practically no exhaust smoke.

There are 8 main systems that are controlled by the ECM:

1. Fuel injection
2. Ignition system
3. Starting system
4. Rotax electronic reverse (RER)
5. Fuel pump
6. Electrical accessories.

The ECM features a monitoring system that self-diagnoses its electronic components. For more information, refer to *DIAGNOSTIC FAULT CODES* subsection.

Electrical power distribution is also controlled by the ECM. Refer to *POWER DISTRIBUTION* subsection.

### Engine Control Module (ECM)

The ECM reads the inputs and makes computations by comparing them to pre-determined parameters, and sends the required control signals to the outputs to ensure proper engine management.

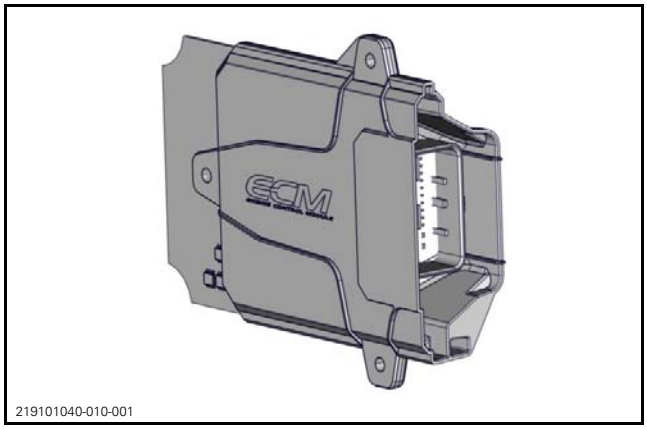


*ECM*

The ECM features a permanent memory that will store fault codes, customer information and other engine information when the engine is stopped.

## SYSTEM FEATURES

### Throttle Protection

If the throttle is not completely closed during engine startup, engine RPM will be limited to idle speed by the ECM.

To revert to normal operation, release the throttle completely and then depress it again.

# ENGINE MANAGEMENT SYSTEM (EMS) - ACE

*600 ACE*

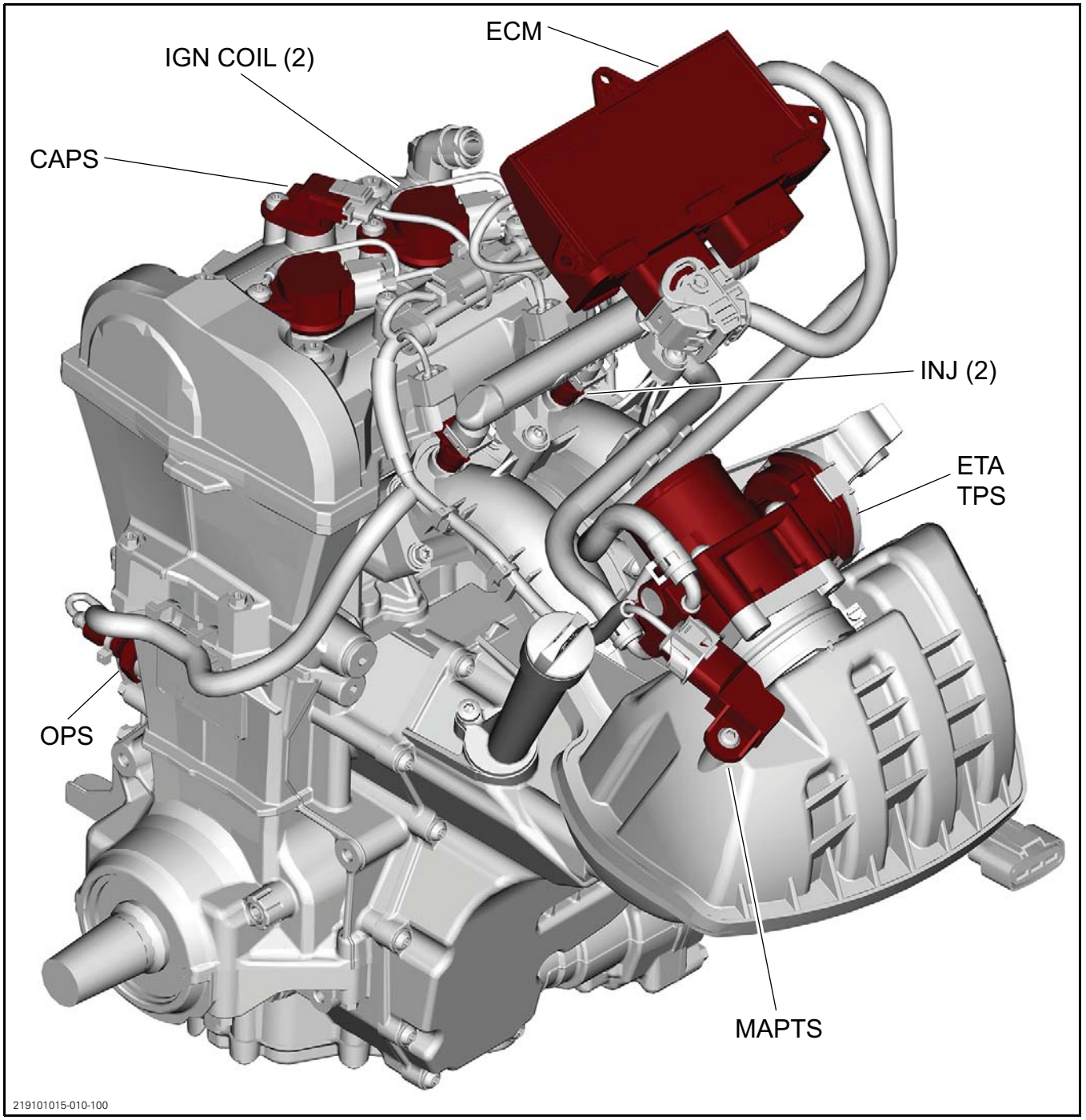


*CAPS = Camshaft Position Sensor*
*ECM = Engine Control Module*
*ETA = Electronic Throttle Actuator*
*IGN COIL = Ignition coil*
*INJ = Injector*
*MAPTS = Manifold Air Pressure/Temperature Sensor*
*OPS = Oil Pressure Switch*
*TPS = Throttle Position Sensor*

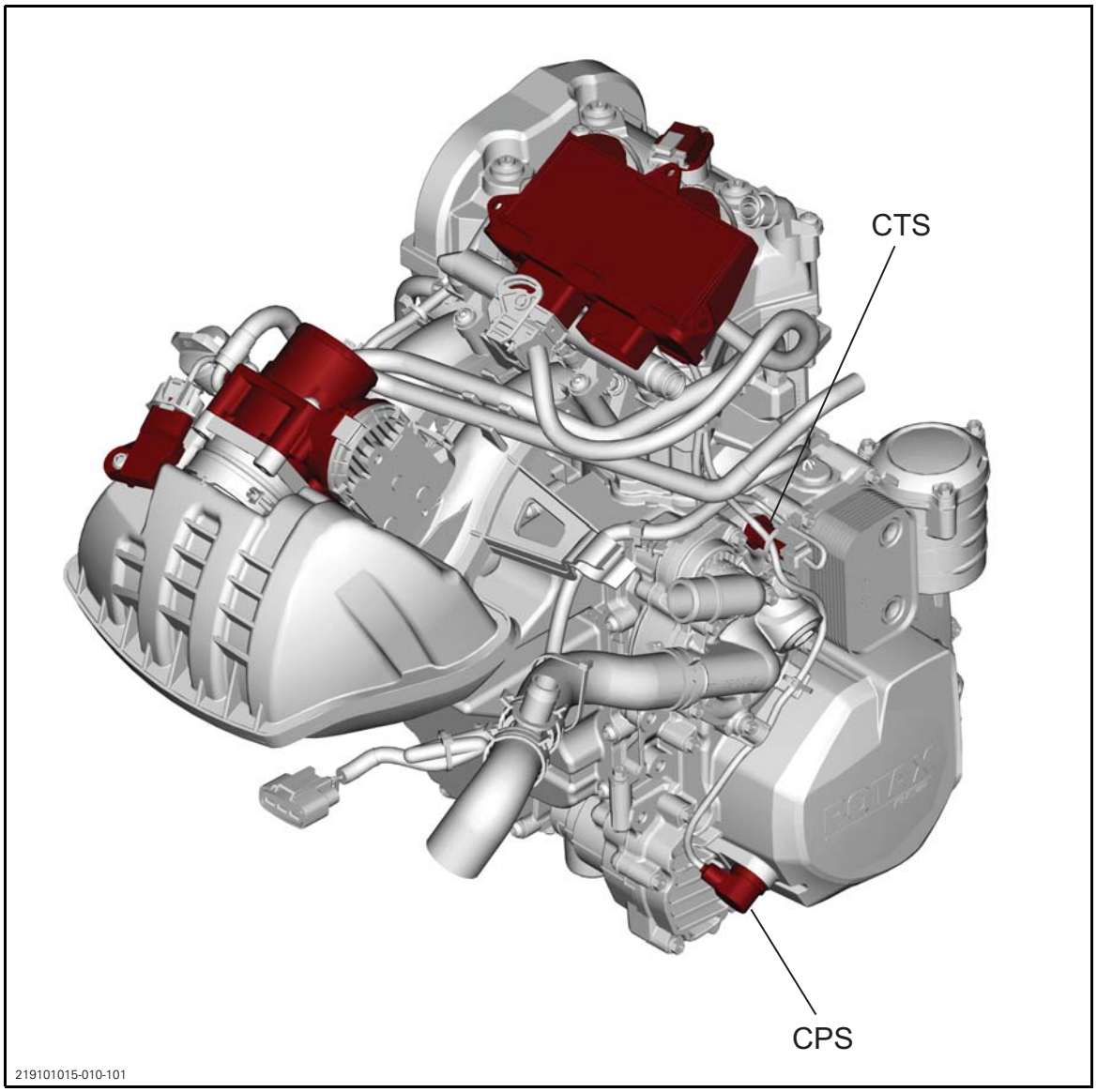


*CPS = Crankshaft Position Sensor*
*CTS = Cooling Temperature Sensor*

*900 ACE*

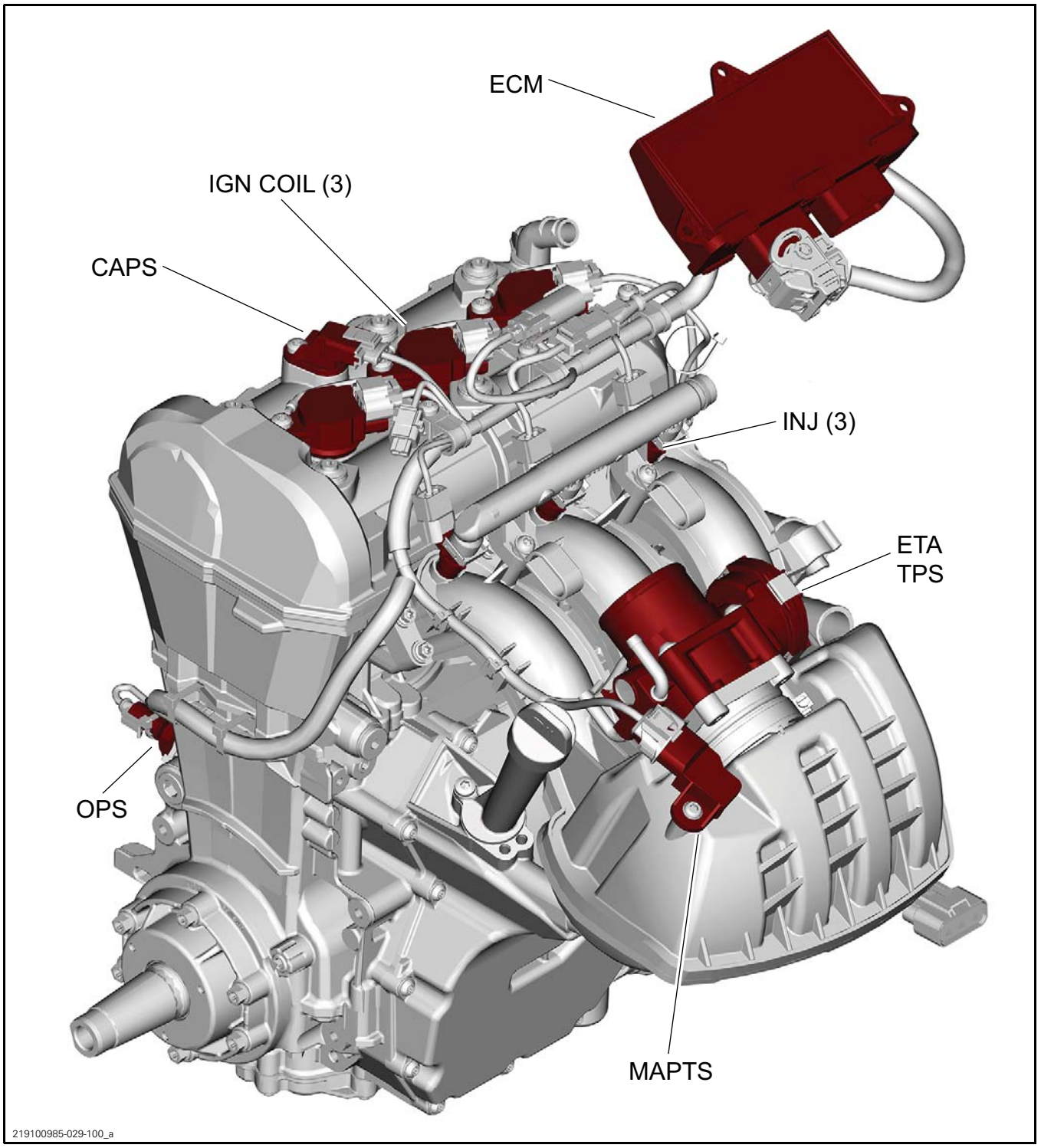


*CAPS = Camshaft Position Sensor*
*ECM = Engine Control Module*
*ETA = Electronic Throttle Actuator*
*IGN COIL = Ignition coil*
*INJ = Injector*
*MAPTS = Manifold Air Pressure/Temperature Sensor*
*OPS = Oil Pressure Switch*
*TPS = Throttle Position Sensor*

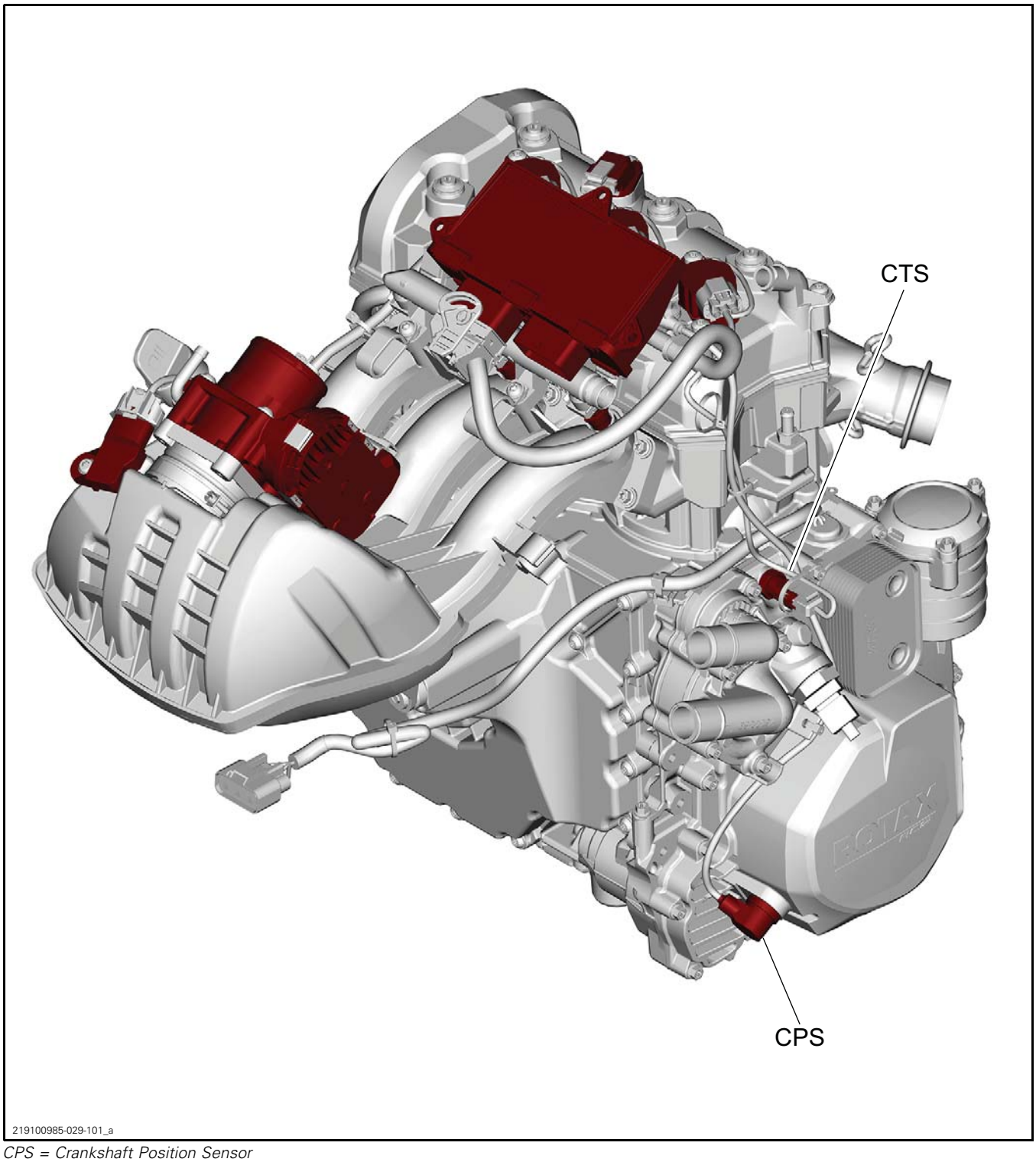


*CPS = Crankshaft Position Sensor*
*CTS = Cooling Temperature Sensor*

*900 ACE Turbo*

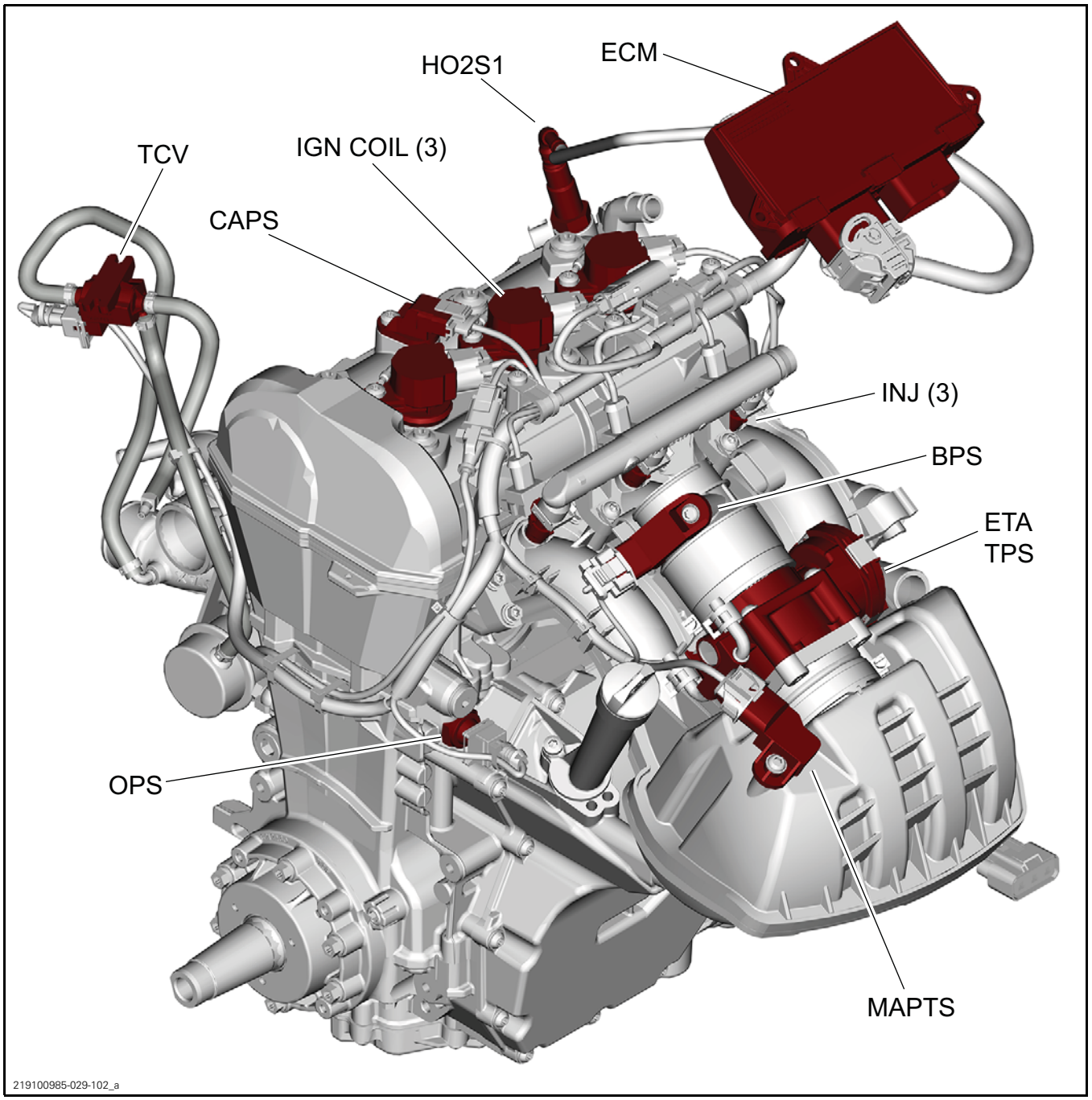


*TCV = Turbo Control Valve*
*BPS = Boost Pressure Sensor*
*CAPS = Camshaft Position Sensor*
*ECM = Engine Control Module*
*ETA = Electric Throttle Actuator*
*HO2S1 = Oxygen sensor*
*IGN COIL = Ignition coil*
*INJ = Injector*
*MAPTS = Manifold Air Pressure/Temperature Sensor*
*OPS = Oil Pressure Switch*
*TPS = Throttle Position Sensor*

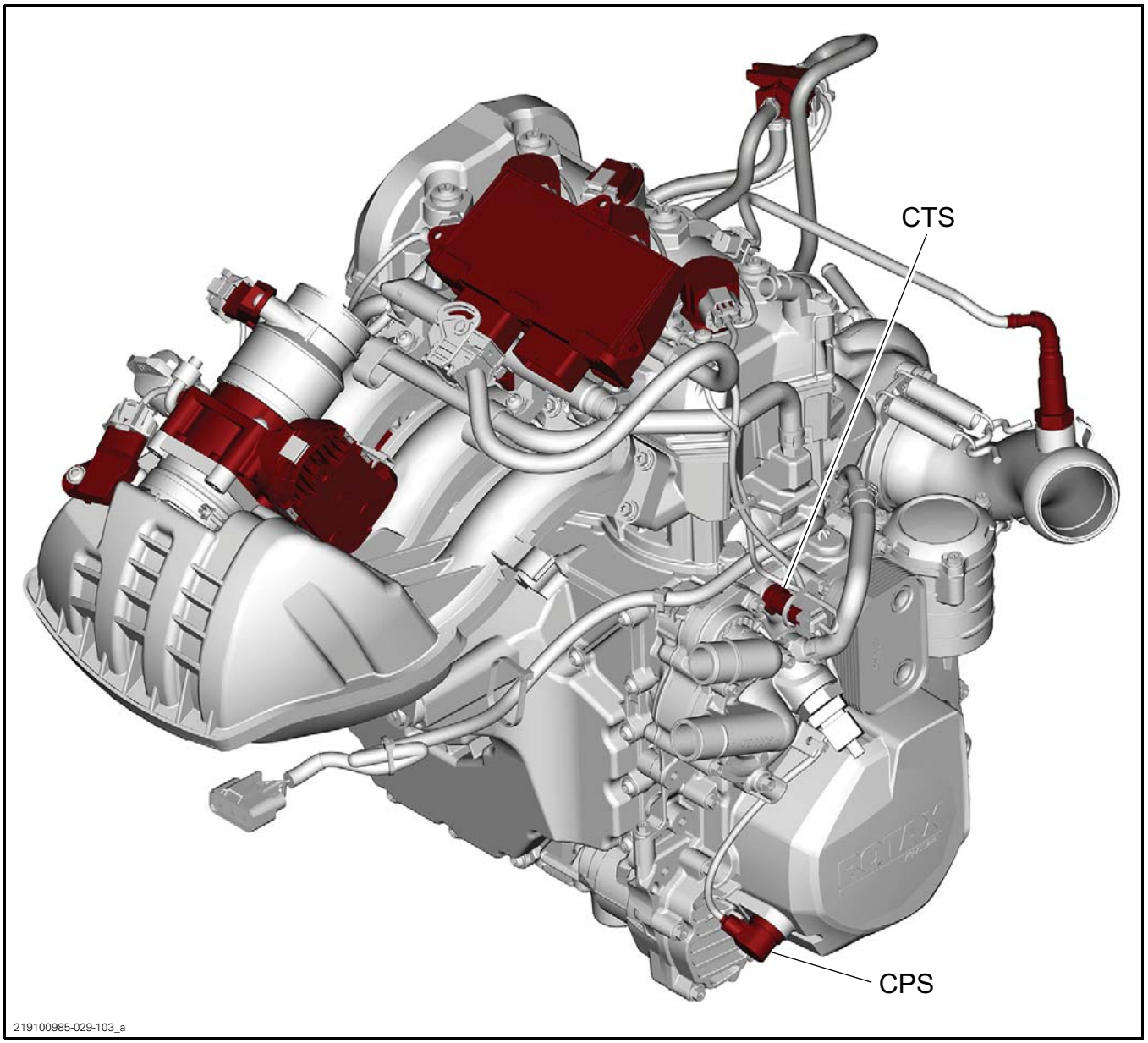


*CPS = Crankshaft Position Sensor*
*CTS = Cooling Temperature Sensor*

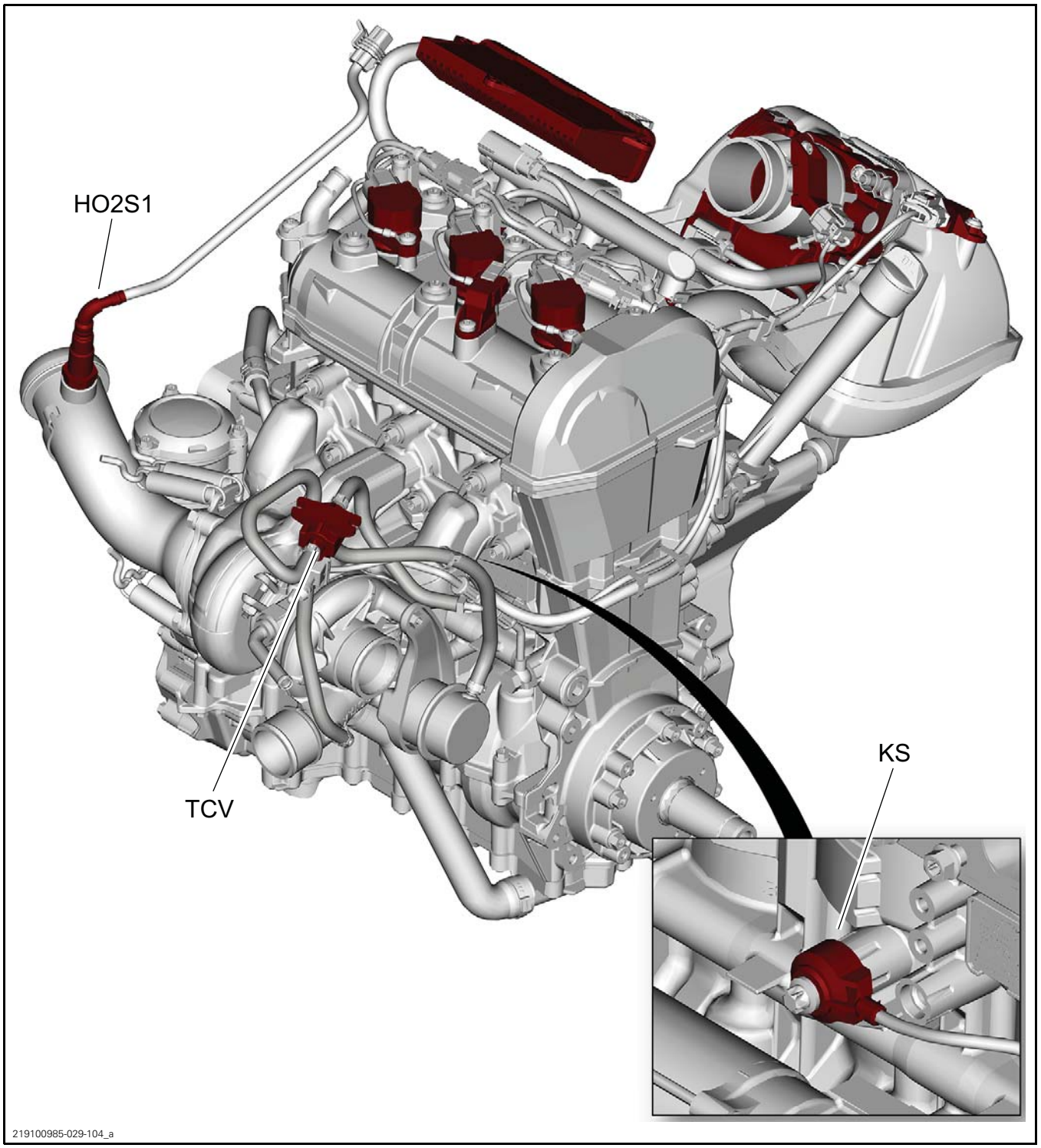


1. *HO2S1 = Oxygen Sensor*
2. *TCV = Turbo Control Valve*
3. *KS = Knock Sensor*

# GENERAL

## SYSTEM DESCRIPTION

The ECM ensures a high power output with clean combustion.

There are 7 main systems that are controlled by the ECM:

1. Electronic Fuel Injection (EFI)
2. Intelligent throttle control (iTC)
3. Cooling system (cooling fan)
4. Ignition system
5. Starting system
6. Fuel system
7. D.E.S.S.

NOTE: For further information related to these systems, refer to the applicable subsection.

The ECM is the central point of the engine management system.

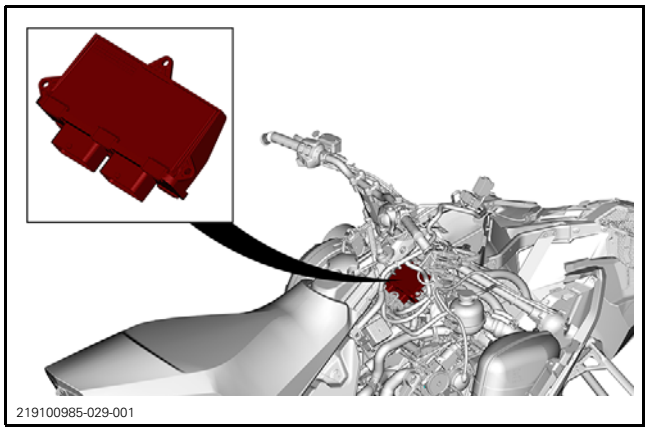


*ECM LOCATION*

The ECM reads input signals from various switches, controls, and sensors, that it compares to predetermined parameters, makes computations, and provides control signal outputs required for proper engine management.

The ECM also interacts through CAN bus with other electronic modules for various functions, information exchange and display of messages. Refer to *CONTROLLER AREA NETWORK (CAN)*.

The ECM also features a permanent memory that will store the information on the various ignition keys programmed to the vehicle, fault codes, customer information, and other engine information, even when the battery is removed from the vehicle.

### Diagnostic Mode

The ECM features a self-diagnostic mode that is activated on system power up (ignition key ON) for certain systems and components, and when the engine is running for others. Refer to *DIAGNOSTIC AND FAULT CODES* subsection for more information.

### Monitoring System

The MONITORING SYSTEM monitors various electrical and electronic components of the engine control systems such as the:

– ETA (Electric Throttle Actuator)
– TPS (Throttle Position Sensor)
– TAS (Throttle Accelerator Sensor)
– ECM (Engine Control Module).

The engine management system provides for redundancies in these components should a failure or partial failure occur to which it will adjust system operation to protect the vehicle and most of importantly, the driver.

Should the engine management system not respond (or not respond correctly) to a failure, then the monitoring system will react to ensure vehicle and driver safety.

The monitoring system therefore ensures the engine management system is functioning correctly.

### Limp Home Mode

When a major component of the EMS is not operating properly, limp home mode will be set.

Engine RPM will be limited and/or engine behavior and control may be modified depending on the cause of the failure.

LIMP HOME will be displayed in the multifunction gauge and the CHECK ENGINE light symbol will be on in the gauge.

A failure of any of the following major components will force the vehicle into LIMP HOME MODE:

– TPS / ETA / TAS
– Injectors
– Low oil pressure
– High engine coolant temp
– MAPTS signal fault.

# ENGINE MANAGEMENT SYSTEM (EMS) - E-TEC

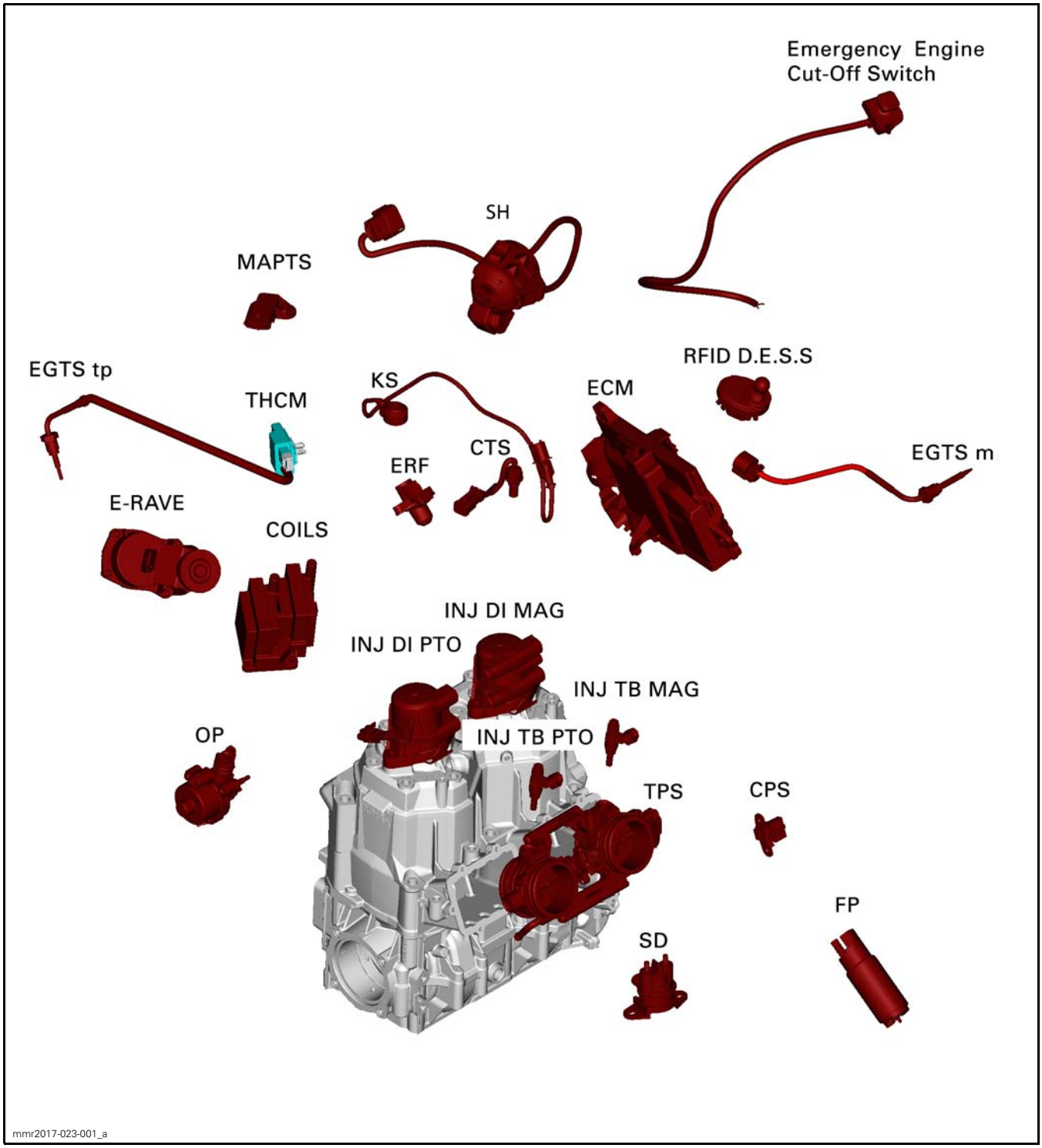

# GENERAL

| ACRONYM | DEFINITION |
|---|---|
| SH | Left hand multi-function switch |
| COILS | Ignition Coils |
| CPS | Crankshaft Position Sensor |
| CTS | Coolant Temperature Sensor |
| RFID DESS | Digitally Encoded Security System |
| ECM | Engine Control Module |
| EGTSm | Exhaust Gas Temperature Sensor muffler |
| EGTStp | Exhaust Gas Temperature Sensor tuned pipe |
| FP | Fuel Pump |
| INJ DI MAG | E-TEC Direct Injector (Mag Side) |
| INJ DI PTO | E-TEC Direct Injector (PTO Side) |
| INJ TB MAG | Throttle body Injector (Mag Side) - 850 E-TEC |
| INJ TB PTO | Throttle body Injector (PTO Side) - 850 E-TEC |
| KS | Knock Sensor |
| MAPTS | Manifold Air Pressure and Temperature Sensor |
| OP | Oil Pump |
| RER | Rotax Electronic Reverse |
| ERF | Rave Position Sensor |
| E-RAVE | Rave Actuator |
| SD | Starter Solenoid |
| TPS | Throttle Position Sensor |
| THCM | Thermocouple Module |

## SYSTEM DESCRIPTION

The Engine Control Module (ECM) ensures a high power output with a clean combustion with practically no exhaust smoke.

There are 8 main systems that are controlled by the ECM:

1. E-TEC Direct fuel injection
2. Throttle body injection
3. Ignition system
4. Starting system
5. Rotax electronic reverse (RER)
6. Digitally encoded security system (D.E.S.S.)
7. Lubrication system
8. 3D RAVE
9. Fuel pump
10. Electrical accessories.

The ECM features a monitoring system that self-diagnoses its electronic components. For more information, refer to *DIAGNOSTIC FAULT CODES* subsection.

Electrical power distribution is also controlled by the ECM. Refer to *POWER DISTRIBUTION* subsection.

### Engine Control Module (ECM)

The ECM reads the inputs and makes computations by comparing them to pre-determined parameters, and sends the required control signals to the outputs to ensure proper engine management.

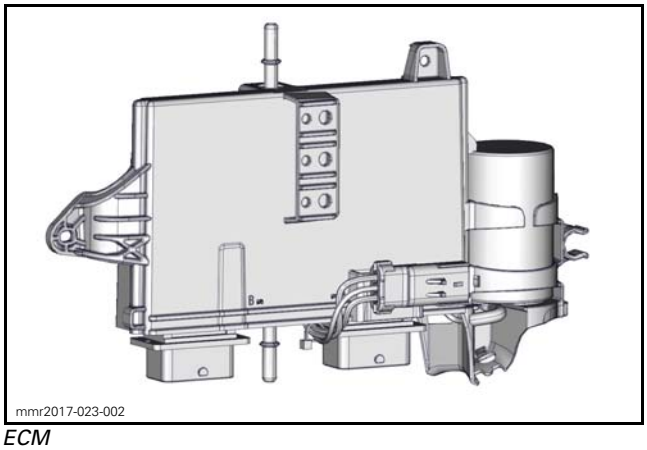


*ECM*

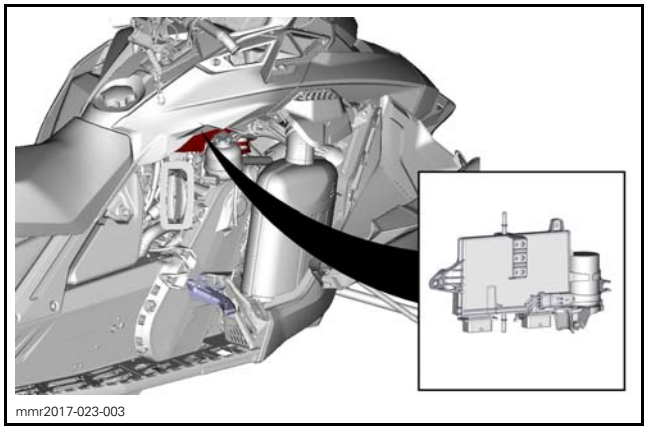


The ECM features a permanent memory that will store fault codes, customer information and other engine information when the engine is stopped.

### ECM Cooling

Since the ECM manages all the vehicle's power needs as it incorporates the voltage regulator / rectifier and other power components, a lot of heat needs to be dissipated.

To ensure adequate heat dissipation, a constant fresh fuel flow from the fuel pump is used to cool down the ECM.

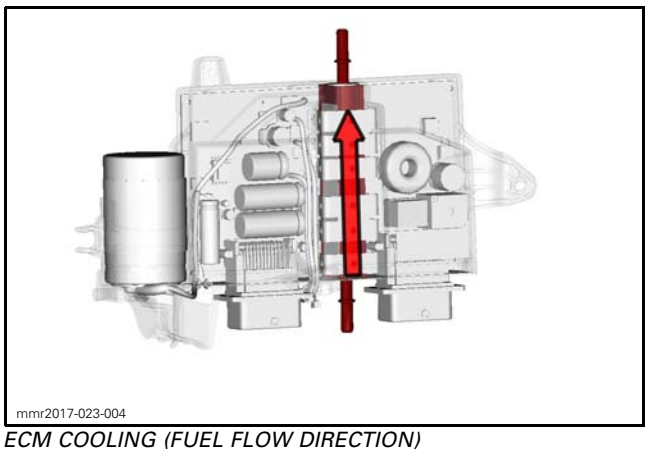


*ECM COOLING (FUEL FLOW DIRECTION)*

# SYSTEM FEATURES

## Throttle Protection

If the throttle is not completely closed during engine startup, engine RPM will be limited to idle speed by the ECM.

To revert to normal operation, release the throttle completely and then depress it again.

## Warm-Up Protection

The engine's RPM is limited until the desired engine and injection oil temperatures are obtained.

| ENGINE WARM-UP TEMPERATURE |
|---|
| 20°C TO 30°C (68°F TO 86°F) |

### Engine Warm-Up

During the engine warm-up period, the RAVE valves will be limited to the MID position which, limits the engine to a maximum of 7500 ± 200 RPM.

### Injection Oil Warm-Up

The injection oil warm-up period is based on oil viscosity.

This is accomplished by measuring the time it takes for the electric oil pump to complete a stroke (oil pump switch signal) from the time at which is was commanded. This provides an indication of the oil viscosity, and therefore temperature and flow capacity.

This function will limit engine speed to 5500 - 7500 RPM depending on detected oil viscosity.

This function may remain active for up to 10 - 15 minutes.

## Automated Engine Oil Fogging (E-TEC)

An automated engine oil fogging has been implemented to automatically inject the required oil to protect the engine during vehicle storage. Refer to *STORAGE PROCEDURE* subsection for details.

# CONTROLLER AREA NETWORK (CAN) - EFI AND E-TEC

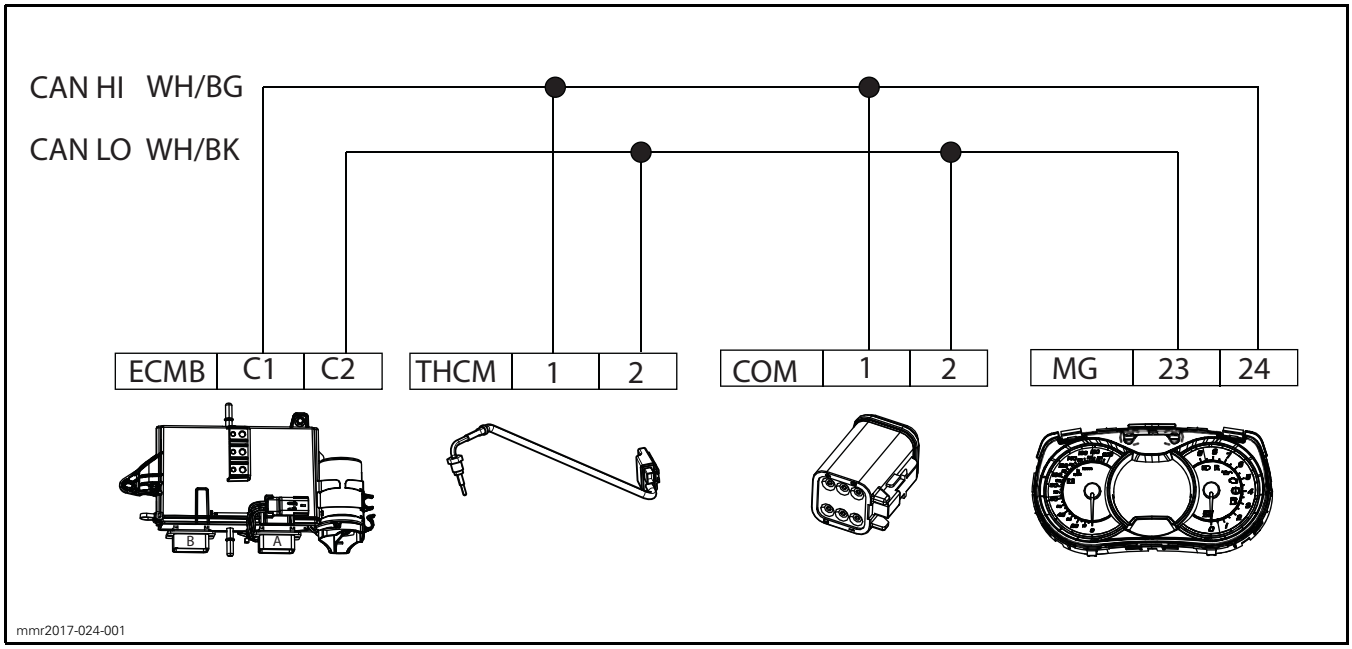


*COM (Diagnostic connector)*
*ECM (Engine control module)*
*MG (Multifunction gauge)*
*THCM (Thermocouple module) (if equipped)*
*WH/BG (White/beige)*
*WH/BK (White/black)*

## GENERAL

### CONTROLLER AREA NETWORK (CAN)

The CAN protocol is an ISO standard for serial data communication.

The ECM forms a network with other components linked with the CAN bus.

The CAN bus (or CAN lines) consist of a pair of wires (WHITE/BEIGE and WHITE/BLACK) that connect every component to each other. The electronic modules are in constant communication within the network.

There are resistors on the CAN lines in the ECM, multifunction gauge and the thermocouple module.

CAN network resistance can be measured from the COM connector pins.

## TROUBLESHOOTING

### CAN COMMUNICATION PROBLEMS

1. Measure CAN network resistance from the COM connector pins.
2. Disconnect modules one by one and observe change in network resistance to find network communication fault.

*Models with THCM*

NOTE: Disconnect THCM last.

| CAN NETWORK RESISTANCE | |
|---|---|
| CONDITION | SPECIFICATION ± 10% |
| Good network<br>or<br>THCM fault | 60 Ω |
| ECM<br>or<br>MG network fault | 120 Ω |

| CAN NETWORK RESISTANCE | |
|---|---|
| CONDITION | SPECIFICATION ± 10% |
| ECM<br>and<br>MG network fault | above 1 MΩ |
| ECM, MG, and THCM<br>network fault | O.L. |
| 1 MΩ = 1,000,000Ω | |

*Models without THCM*

| CAN NETWORK RESISTANCE | |
|---|---|
| CONDITION | SPECIFICATION ± 10% |
| Good network | 60 Ω |
| ECM<br>or<br>MG network fault | 120 Ω |
| ECM<br>and<br>MG network fault | O.L. |

*All Models*

If the resistance does not vary when a module is unplugged ensure wiring harness and pins are in good condition before replacing a module.

NOTE: There is no resistor in the COM connector.

# CONTROLLER AREA NETWORK (CAN) - ACE

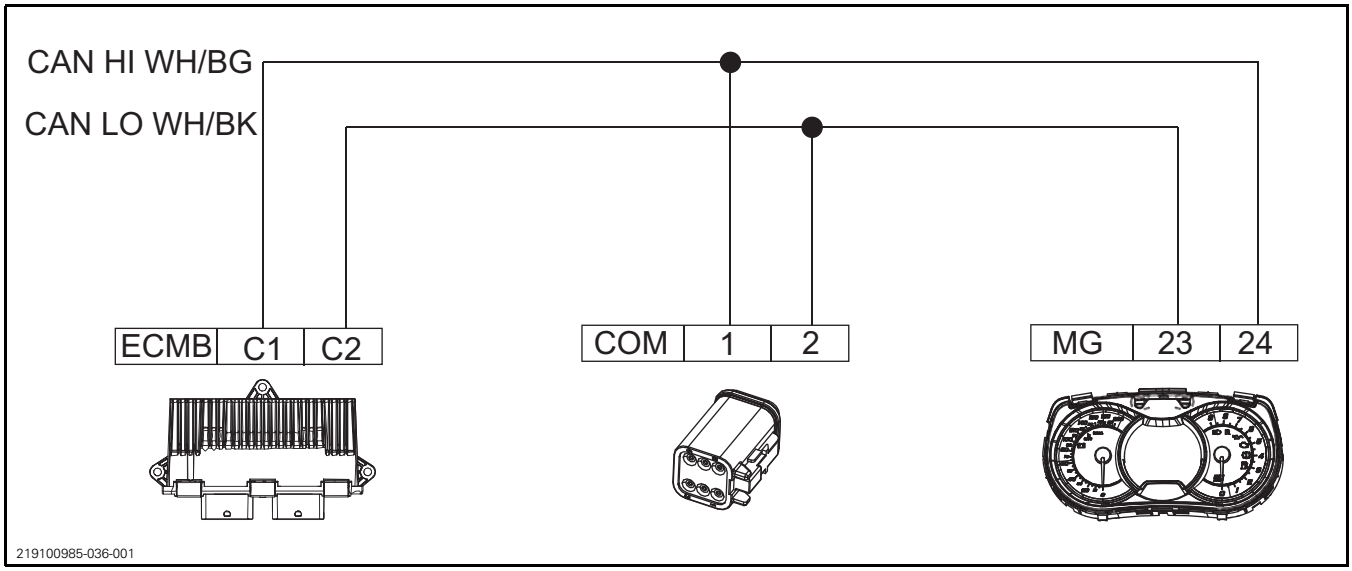


*COM (Diagnostic connector)*
*ECM (Engine control module)*
*MG (Multifunction gauge)*
*WH/BG (White/beige)*
*WH/BK (White/black)*

## GENERAL

### CONTROLLER AREA NETWORK (CAN)

The CAN protocol is an ISO standard for serial data communication.

The ECM forms a network with other components linked with the CAN bus.

The CAN bus (or CAN lines) consist of a pair of wires (WHITE/BEIGE and WHITE/BLACK) that connect every component to each other. The electronic modules are in constant communication within the network.

There are resistors on the CAN lines in the ECM, multifunction gauge and the thermocouple module.

CAN network resistance can be measured from the COM connector pins.

## TROUBLESHOOTING

### CAN COMMUNICATION PROBLEMS

1. Measure CAN network resistance from the COM connector pins.
2. Disconnect modules one by one and observe change in network resistance to find network communication fault.

| CAN NETWORK RESISTANCE | |
|---|---|
| CONDITION | SPECIFICATION ± 10% |
| Good network | 60 Ω |
| ECM<br>or<br>MG network fault | 120 Ω |
| ECM<br>and<br>MG network fault | O.L. |

If the resistance does not vary when a module is unplugged ensure wiring harness and pins are in good condition before replacing a module.

NOTE: There is no resistor in the COM connector.

# COMMUNICATION TOOLS

## SERVICE TOOLS


| Description | Part Number | Page |
|---|---|---|
| 12 V BATTERY SUPPLY CABLE | 529 035 997 | 121 |
| DIAGNOSTIC CABLE | 710 000 851 | 121 |
| MPI-2 INTERFACE CARD | 529 036 018 | 121 |
| MPI-3 INTERFACE CARD | 529 036 353 | 121 |
| POWER INTERFACE | 515 177 223 | 121 |


## GENERAL

Refer to the **B.U.D.S. directory** on *KNOWLEDGE CENTER* for all BUDS related information, including:

- Download link
- User manual (programming keys, reading fault codes, navigation through menus, writing data to modules etc.)
- Installation instructions.

Download and install the software on a PC.

Connect the vehicle to the BRP diagnostic software (BUDS2).

## REQUIRED TOOLS

| MANDATORY TOOLS | |
|---|---|
| A personal computer (laptop or desktop) | |
| MPI-2 INTERFACE CARD (P/N 529 036 018) |  |
| **OR** | |
| MPI-3 INTERFACE CARD (P/N 529 036 353) |  |
| DIAGNOSTIC CABLE (P/N 710 000 851) |  |
| POWER INTERFACE (P/N 515 177 223) |  |
| 12 V BATTERY SUPPLY CABLE (P/N 529 035 997) |  |
| **OPTIONAL TOOL** | |
| Extension cable available at electronic retail outlets. Do not exceed 7.5 m (25 ft) |  |

### Multi-Purpose Interface Card (MPI-2 or MPI-3)

The Multi-Purpose Interface (MPI) in conjunction with the diagnostic cable is used with BUDS2 to communicate with the engine control module (ECM) and other modules.

The MPI card uses the power from the PC computer's USB port.

### Power Interface

The power interface and power supply cable allows the connection of a fully charged external battery to provide stable voltage to the unit and BUDS2.

Stable voltage is essential to prevent update crashes.

**Do not** use a charger on the battery (unit or external) during software updates.

The power interface and power supply cable connected to external battery can be used for extended diagnostic time.



mbs2018-006-002

*TYPICAL*

The power interface with or without the power supply cable will keep the unit powered even if the ignition switch is turned off or the D.E.S.S. key is removed.

The power interface has a fuse protected voltmeter included and an extra fuse to protect from polarity inversion of the power supply cable.

# TROUBLESHOOTING

Refer to the BRP BUDS chart to ensure you are using the appropriate hardware and tools.

## COMMUNICATION PROBLEMS

### MPI Connection Troubleshooting

#### MPI Status Lights

The MPI includes 2 status lights to show the connection conditions: USB and CAN. **Both lights must be GREEN** for the MPI to function properly. Otherwise, refer to the following charts.

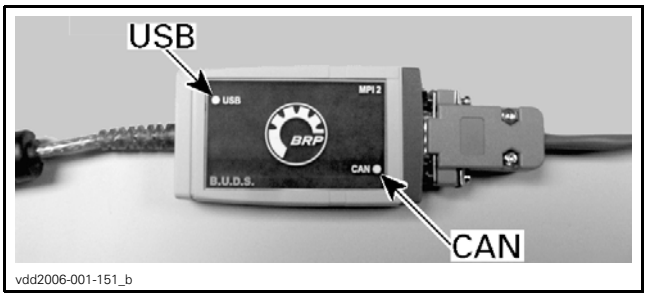


vdd2006-001-151_b

*MPI-2 CARD*

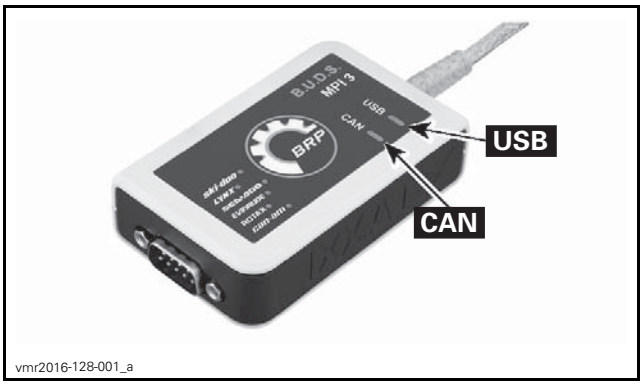


vmr2016-128-001_a

*MPI-3 CARD*

Prerequisite for USB Communication:

– PC Computer turned ON
– MPI connected to PC computer.

| COMMUNICATION PROBLEM (USB) | |
|---|---|
| STATUS | WHAT TO DO |
| USB Light is OFF | – Check USB connection between MPI-2 and PC computer.<br>– Check USB operation on PC computer (hardware or Windows drivers). |
| USB Light is GREEN | – Connections are GOOD. Communication can take place on USB side. |

Prerequisite for CAN Communication:

1. MPI connected to diagnostic connector.
2. The tether cord cap (D.E.S.S. key) is installed on the engine cut-off switch and pull the emergency stop switch.
3. B.U.D.S. started and logged.
4. ECM is powered.

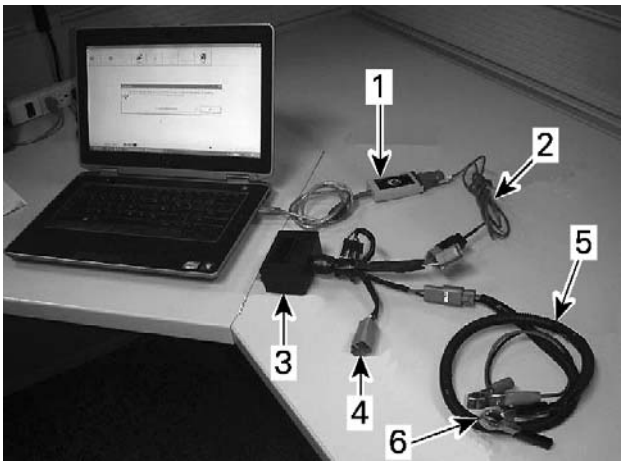


mmr2013-024-002_a

1. *MPI Interface card*
2. *Diagnostic cable*
3. *Power interface*
4. *To vehicle diagnostic connector*
5. *12 V battery supply cable*
6. *To 12 V battery*

NOTE: The battery supply cable is only necessary on models without a battery.

| COMMUNICATION PROBLEM (CAN) | |
|---|---|
| STATUS | WHAT TO DO |
| CAN Light is OFF | – B.U.D.S. does not communicate with the vehicle.<br>– Check connections from computer to vehicle.<br>– Check if B.U.D.S. is started.<br>– Check if vehicle is powered: is cluster turned ON. If it is not ON, install the tether cord cap (D.E.S.S. key) on the engine cut-off switch and pull the emergency stop switch. |
| CAN Light is RED | This occurs when B.U.D.S. looses communication with vehicle.<br>– Check connections from computer to vehicle.<br>– Check if vehicle is powered: is cluster turned ON? If not, install the tether cord cap (D.E.S.S. key) on the engine cut-off switch and pull the emergency stop switch. |
| CAN Light is GREEN | – Connections are GOOD. B.U.D.S. communicates normally with the vehicle. |

## Power Interface Test

When the power interface is connected to the vehicle diagnostic connector and the emergency stop switch is pulled, the multifunction gauge and the headlight should turn on. If any test failed, check the following and repair or replace power interface.

1. Set the emergency stop switch to run position.
2. Power interface fuses.

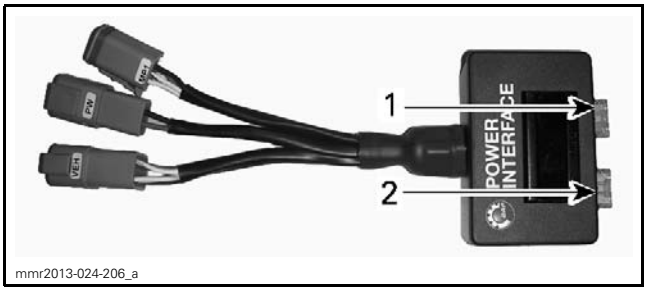


mmr2013-024-206_a

*1. Fuse 1*
*2. Fuse 2*

3. External battery voltage should be displayed on Power interface (primary voltage if engine running).
   3.1 Ensure battery charge is high enough to keep the vehicle ON for the duration of the maintenance.

NOTE: This is especially IMPORTANT if you are updating vehicle software. In case of doubt, charge battery for at least 15 minutes; disconnect charger prior to updating software.

# DIAGNOSTIC AND FAULT CODES (ALL EXCEPT 600 ACE)

## GENERAL

### MONITORING SYSTEM

The ECM features a monitoring system that self-diagnose its electronic components.

When a predefined condition (engine overheat for example) or a fault occurs, the ECM sends a signal to the multifunction gauge and/or audible signals to a beeper to inform you of this particular condition.

The ECM monitors the following functions and components.

| COMPONENT |
|---|
| ECM, TPS, CTS, CPS, KS, RAVE valve solenoids, MAPTS, RPS, ignition coils, fuel injectors and THCM (EGTSm and EGTStp) |
| 12 volts under/over voltage<br>60 volts under/over voltage |
| D.E.S.S. |
| RER |
| Low oil level, electronic oil injection pump |
| Oil temperature (end of piston stroke feedback from electronic oil injection pump ) |
| Engine RPM |
| CAN |
| Fuel pump |

#### Limp Home Mode

The ECM may automatically set default parameters to ensure the adequate operation of the vehicle if a component of the engine management system is not operating properly.

NOTE: Sensor failures will not automatically result in limp home mode. The appropriate fault code will turn on and in some cases the beeper will sound.

The engine RPM may be limited if some critical components fail. In this case, releasing the throttle and letting the engine return to idle speed may allow normal operation to come back. If it does not, try removing and reinstalling the tether cord cap (D.E.S.S. key) on the engine cut-off switch.

These performance-reduced modes allow the rider to continue on to seek help, or return home, which would otherwise not be possible.

| ECM ACTION | CAUSE |
|---|---|
| Engine is gradually stopped.<br><br>Continuous fast short beeps and a shutdown message is displayed in multifunction gauge until shutdown. | Fuel pump wiring short circuit to ground or open circuit. |
| | Fuel pump current requirement is too high. |
| | Engine idle overheat protection:<br>– Engine idled more than 5 seconds after engine temperature increased above 95°C (203°F).<br>– Engine idled more than 5 minutes after engine temperature increased above 37°C (99°F). |
| Engine speed is limited to 2500 RPM. | D.E.S.S. key is not recognized by the ECM.<br>The antitheft system is active.<br>RAVE valves are kept at closed position. |
| Engine speed is limited to 5500 RPM (RAVE valves are kept closed). | Oil injection pump wiring shorted to ground or open circuit. |
| | Low voltage in the 55 Vdc system. Voltage dropped by 5 V. |
| | ECM overheat (85°C (185°F)).<br><br>Engine overheat (100°C (212°F) and above). |
| | Exhaust gas temperature too high (800°C (1,472°F) and above). |
| | High engine detonation. |
| Engine speed is limited to 7000 RPM. | Max. RPM allowed to the engine in reverse.<br>RAVE valves are kept closed. |
| Engine speed is limited (Variable limit) | Max. RPM allowed varies when engine is cold, according to oil viscosity |
| Engine speed is limited to 8600 RPM. | Maximum engine RPM allowed. |

### Pilot Lamps and Beep Codes

Warning lights in the multifunction gauge and/or a beeper provide signals as to a vehicle operation feedback, or to indicate a problem.

A pilot lamp can flash alone or in combination with another lamp.

Beeper codes will be heard and messages (depending on gauge model) will be displayed to attract your attention and inform you of the situation.

## DIAGNOSTIC FAULT CODES (DTC)

A fault code is an indication that a glitch or malfunction is detected by the monitoring system of the vehicle.

When there is a problem, the ECM can provide fault codes to ease troubleshooting.

The faults registered in the ECM are stored in memory.

IMPORTANT: After a problem has been solved, be sure to clear the fault(s) in the ECM using the BUDS2 software. This will properly reset their states.

### How to Read Fault Codes Using BUDS2 Software

Refer to *COMMUNICATION TOOLS AND B.U.D.S.* subsection.

For more information pertaining to the faults code status and report, refer to B.U.D.S. online help.

### How to Read Fault Codes on the Multifunction Gauge

Same gauges can display fault codes.. Refer to the applicable *GAUGE* subsection.

### How to Find Fault Code Descriptions

Connect BUDS2 to the vehicle. Refer to *COMMUNICATION TOOLS AND BUDS* subsection.

Navigate to the faults page in BUDS2.

Browse lists of active/occurred and inactive fault codes.

# DIAGNOSTIC AND FAULT CODES (600 ACE)

## GENERAL

### MONITORING SYSTEM

This system monitors the electronic components of the EMS (engine management system), the multifunction gauge, and other components of the electrical system to detect if they are faulty or defective. The monitoring system becomes active when the START button is pressed.

NOTE: Some components require the engine to be running to be monitored (fuel injectors for example).

The following components or functions are monitored.

| EMS MONITORING |
|---|
| Battery voltage |
| EMS sensors (TAS, TPS, CPS, CAPS, MAPTS, CTS, OPS). Throttle actuator, ignition coils and fuel injectors |
| ECM |
| CAN |
| Engine starter solenoid (SD) |
| Fuel pump (FP) |
| Multifunction gauge (MG) |
| Cooling Fan Module (CFM) |
| Eco Mode Switch (ECO) |
| Radio Frequency Identification (RFID) |
| Relays |

| MULTIFUNCTION GAUGE MONITORING |
|---|
| Multifunction gauge |
| Light Switch |
| Vehicle Speed Sensor (VSS) |
| MODE switch |
| CAN |
| Fuel level sensor |
| ECM |

When a malfunction is currently detected, the related electronic module:

- Sets an active fault code.
- Adapts the proper protection strategy according to the failure.
- Sends out warning signals to the multifunction gauge which provides beeper codes, fault indicators and fault messages to inform the rider of a particular condition.

When a minor or transient fault occurs, the fault and beeper will cease automatically if the condition that caused the fault no longer exists.

If a minor fault is active, the engine will operate without a noticeable loss of performance.

Releasing the throttle and letting the engine return to idle speed may allow normal operation to resume. If this does not work, try the following:

- Remove tether cord from the engine cut-off switch.
- Wait 3 minutes to allow the ECM to shut down.
- Start engine.
- Check if the fault code is still active.

The electronic system will react differently depending on the fault type. If a severe failure occurs, the engine may not be allowed to be started. In other cases, the engine may operate in limp home mode (reduced RPM) or not be affected at all.

These strategies are used to protect the engine system from damage and to maintain safe operation of the vehicle.

Midwest Manuals
Green Manuals
Paperless Manuals For a Better Tomorrow
www.green-manuals.com
If you bought this manual from any other seller please leave them NEGATIVE feedback and notify us at bestshopmanuals@gmail.com

## Engine Overheat Protection

| COOLANT TEMPERATURE | ENGINE OPERATING CONDITION | EMS ACTION |
|---|---|---|
| Above 70°C (158°F) | Idling more than:<br>– 12 minutes (with radiator fan)<br>– 5 minutes (without radiator fan) | Engine is stopped.<br>5 seconds before stopping engine:<br>– Beeper is activated.<br>– SHUTDOWN is displayed in multifunction gauge. |
| Above 110°C (230°F) | Riding | Beeper is continuously activated.<br>Temperature light is turned ON.<br>ENGINE_TEMP is displayed in multifunction gauge. |
| Above 118°C (244°F) | Idling more than 30 seconds | Engine is stopped.<br>5 seconds before stopping engine:<br>– Beeper is activated.<br>– SHUTDOWN is displayed in multifunction gauge. |
| | Riding | Beeper is activated.<br>Temperature light is turned ON.<br>ENGINE_TEMP is displayed in multifunction gauge.<br>Check engine light is turned ON.<br>Engine speed is limited to 5500 RPM.<br>A fault code is set. |

# HOW TO FIND FAULT CODE DESCRIPTIONS

For the latest fault code table, use the Info Center submenu in BOSSWeb and search for: Ski-Doo DTC.

NOTE: Only select "TST" in the advanced search when searching for a DTC table.

# INTELLIGENT THROTTLE CONTROL (iTC) - ACE

## GENERAL

### SYSTEM DESCRIPTION

The iTC is an electronic throttle control system that includes a cableless throttle accelerator sensor (TAS) located on the RH side of handlebar, an electronic throttle control (ETC) located on the throttle body and the engine control module (ECM). The iTC is often referred to as a "throttle by wire" system.

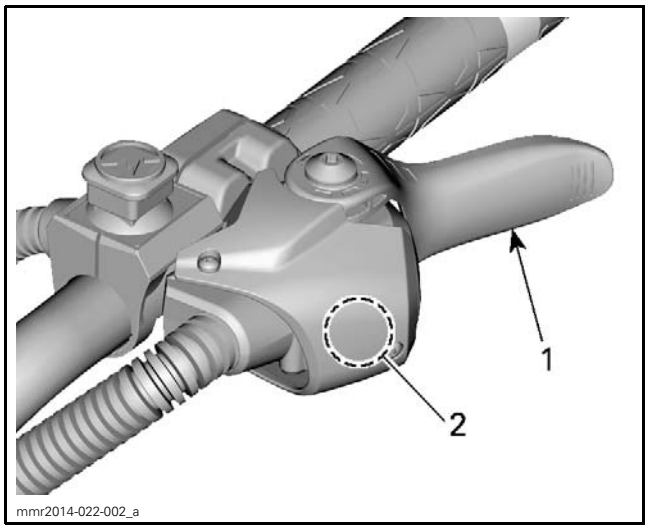


*TYPICAL*
1. *Throttle lever*
2. *Throttle accelerator sensor (TAS)*

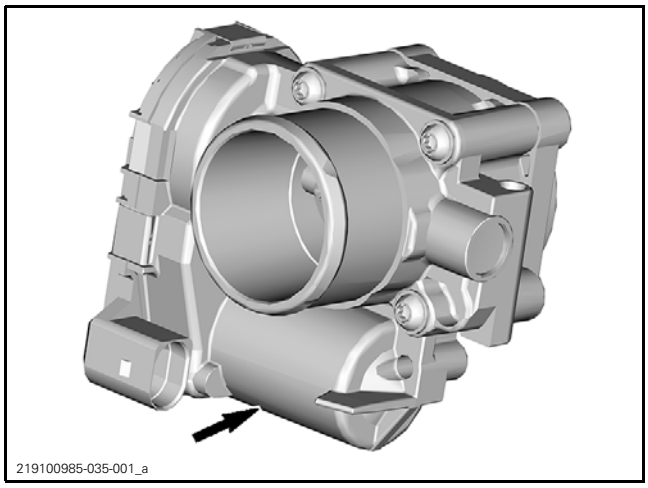


*THROTTLE ACTUATOR*

The ETC is equipped with a motor which controls the throttle opening.

The position of the throttle is measured with two potentiometers.

The ECM evaluates the throttle position with these two measures and controls the motor to reach the desired position.

These potentiometers are powered by the ECM with a voltage of 3.3 volts.

The signals given by these potentiometers vary from 0.33V to 2.97V for (SIGNAL 1) and 2.97V to 0.33V for (SIGNAL 2).

The relation between these two signals is (SIGNAL 1) + (SIGNAL 2) = 3.3V.

When ECM is woken up, throttle body will close completely to reinitialize. For both signals to be properly set at idle position.

If a problem occurs with any of these controls or signals then a diagnostic fault code will be generated.

#### Throttle Accelerator Sensor (TAS)

The throttle accelerator sensor (TAS) is a double hall effect sensor, which translates the position of the lever into two analog voltage and sends a signal to the ECM which is proportional to the throttle lever angle.

These Hall effect sensors are powered by the ECM with a voltage of 5.0 volts.

The signals given by these sensors vary from 0.6V to 2.97V for (SIGNAL 1) and 0.3V to 1.49V for (SIGNAL 2).

The relation between these two signals is (Signal 1) = (Signal 2) X 2.

If a problem occurs with any of these signals then a diagnostic fault code will be generated.

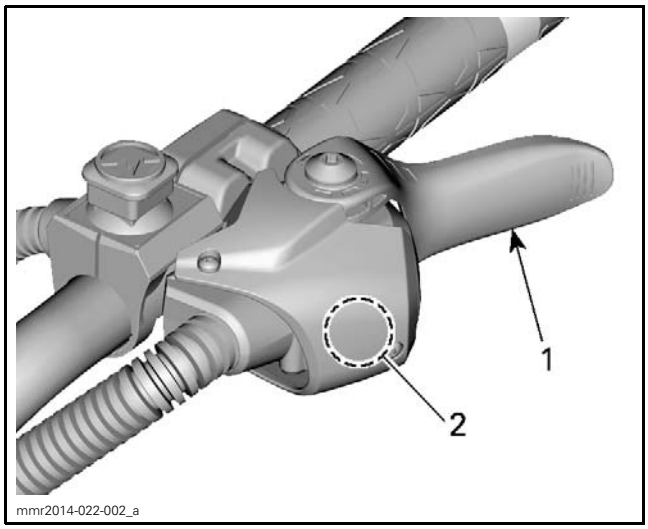


*1. Throttle lever*
*2. Throttle accelerator sensor (TAS)*

# PROCEDURES

## THROTTLE ACCELERATOR SENSOR (TAS)

### Testing the TAS Voltage

Disconnect TAS connector and measure voltage on the main harness side.

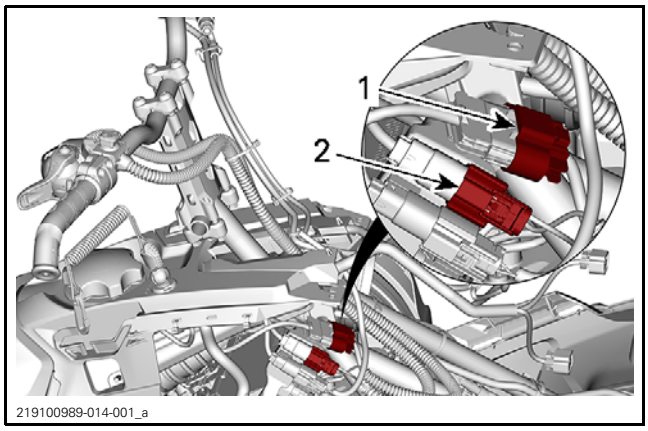


*1. Throttle lever connector*
*2. RH steering connector*

| TAS VOLTAGE TEST | | |
|---|---|---|
| PIN | | VOLTAGE |
| B | A | 5V |
| D | E | 5V |

If not 5V, ECM might be defective, oxidation might be present in circuits or terminals might not have good contact.

Reconnect TAS connector and backprobe to measure voltage.

If 2 for 1 relation is not met for signal 1 and 2 ratio, then TAS sensor is defective. Refer to *REPLACING THE TAS* in this subsection for replacement procedure.

### Replacing the TAS

1. Remove throttle lever housing from vehicle. Refer to *STEERING SYSTEM* subsection.
2. Replace the throttle lever with its housing.

### Testing the ETC Voltage

Disconnect ETC connector on throttle body and measure on the engine harness.

| ETC VOLTAGE TEST | | |
|---|---|---|
| PIN | | VOLTAGE |
| 6 | 2 | 3.3V |

If not 3.3V, ECM is might be defective, oxidation might be present in circuits or terminals might not have good contact.

Reconnect ETC connector and backprobe to measure voltage.

If (Signal 1) + (Signal 2) does not equal 3.3V, then the ETC is defective. Refer to *REPLACING THE ETC* in this subsection for replacement procedure.

### Replacing the ETC

The ETC comes assembled with the complete throttle body unit.

To replace throttle body assembly. Refer to *AIR INTAKE SYSTEM*.

Initialize the Throttle Position Sensor. Refer to *ELECTRONIC FUEL INJECTION* subsection for BUDS2 procedure.

## ECO MODE SWITCH

### Testing the ECO Mode Switch Operation

1. Unclip and raise switch.
2. Disconnect the ECO mode switch connectors.

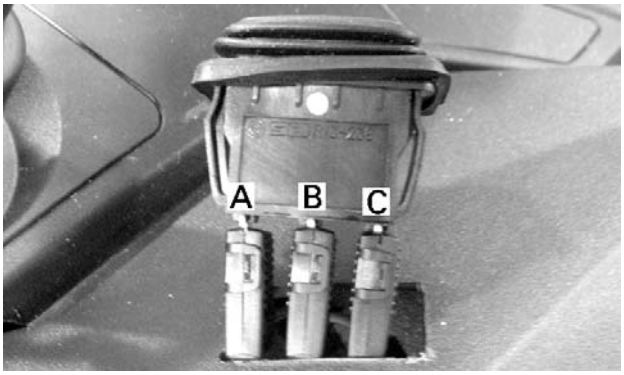

mmr2015-025-004_a

*1. Driving mode switch*
*2. Driving mode switch connector*

3. Set multimeter to Ω.
4. Test the ECO mode switch for continuity as per following table.

| ECO MODE SWITCH CONTINUITY TEST | | |
|---|---|---|
| SWITCH POSITION | PIN | RESISTANCE |
| UP | B to A | 0 Ω |
| Released | B to A | Infinite (OL) |
| DOWN | B to C | 0 Ω |
| Released | B to C | Infinite (OL) |

# THROTTLE CABLE

## Adjusting the Throttle Cable

1. Connect the vehicle to the BRP diagnostic software (BUDS2). Refer to *COMMUNICATION TOOLS AND BUDS* subsection.
2. In BUDS2, go to:
   - **Measurements** page
   - **ECM** button
   - **Live View** tabs.
3. Position handlebar straight and level.

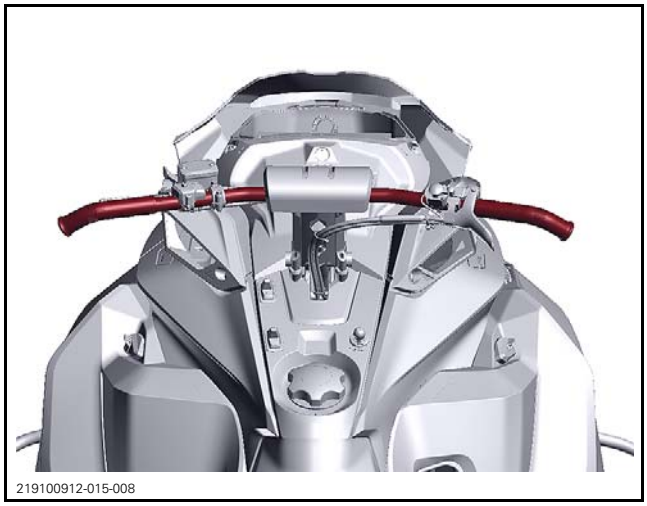


*TYPICAL - HANDLEBAR IN STRAIGHT AHEAD POSITION*

4. Unlock throttle cable adjuster lock nut.

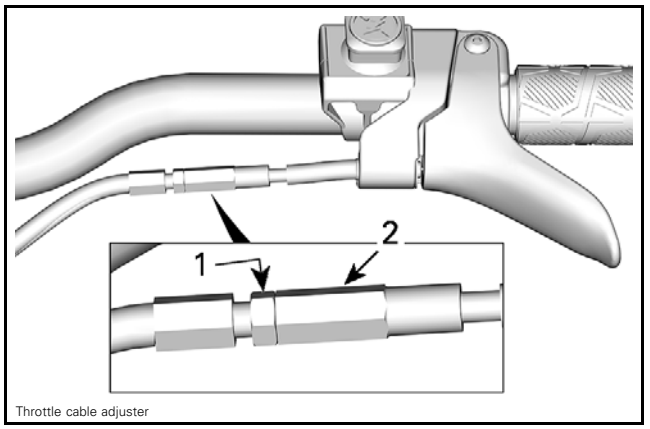


*1. Throttle cable adjuster lock nut*
*2. Throttle cable adjuster*

5. Insert a 0.762 mm (.03 in) feeler gauge between throttle lever and throttle lever housing.

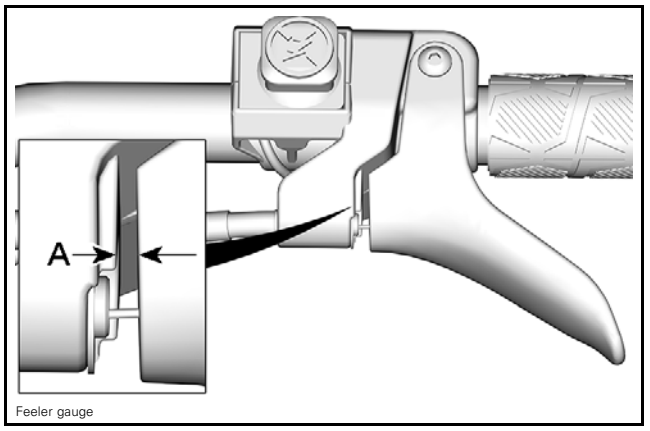


*A. 0.762 mm (.03 in)*

6. Adjust throttle cable until the **Accelerator Pedal Position** value is 0% in BUDS2.
7. Lock throttle cable adjuster lock nut.
8. Remove the feeler gauge.
9. Fully depress the throttle lever and ensure the **Accelerator Pedal Position** value is more than 100 % in BUDS2.
10. Activate and release throttle lever 2 - 3 times to settle throttle plate.
11. Confirm the opening value remains at more than 100 % in BUDS2.
12. Readjust throttle cable if necessary.
13. Reset the Closed Throttle Value.

# FUEL TANK AND FUEL PUMP (EFI)

## SERVICE TOOLS

| Description | Part Number | Page |
|---|---|---|
| LEAK TEST KIT | 529 033 100 | 142 |
| OETIKER PLIER | 295 000 070 | 141, 145 |
| PRESSURE GAUGE | 529 036 395 | 143 |
| SMALL HOSE PINCHER | 295 000 076 | 142 |
| T FITTING FUEL PRESSURE | 529 036 509 | 143 |
| VACUUM/PRESSURE PUMP | 529 021 800 | 142 |

## SERVICE PRODUCTS

| Description | Part Number | Page |
|---|---|---|
| CLUTCH AND PULLEY FLANGE CLEANER PRO S1 | 779244 | 141 |

*16 in Track*

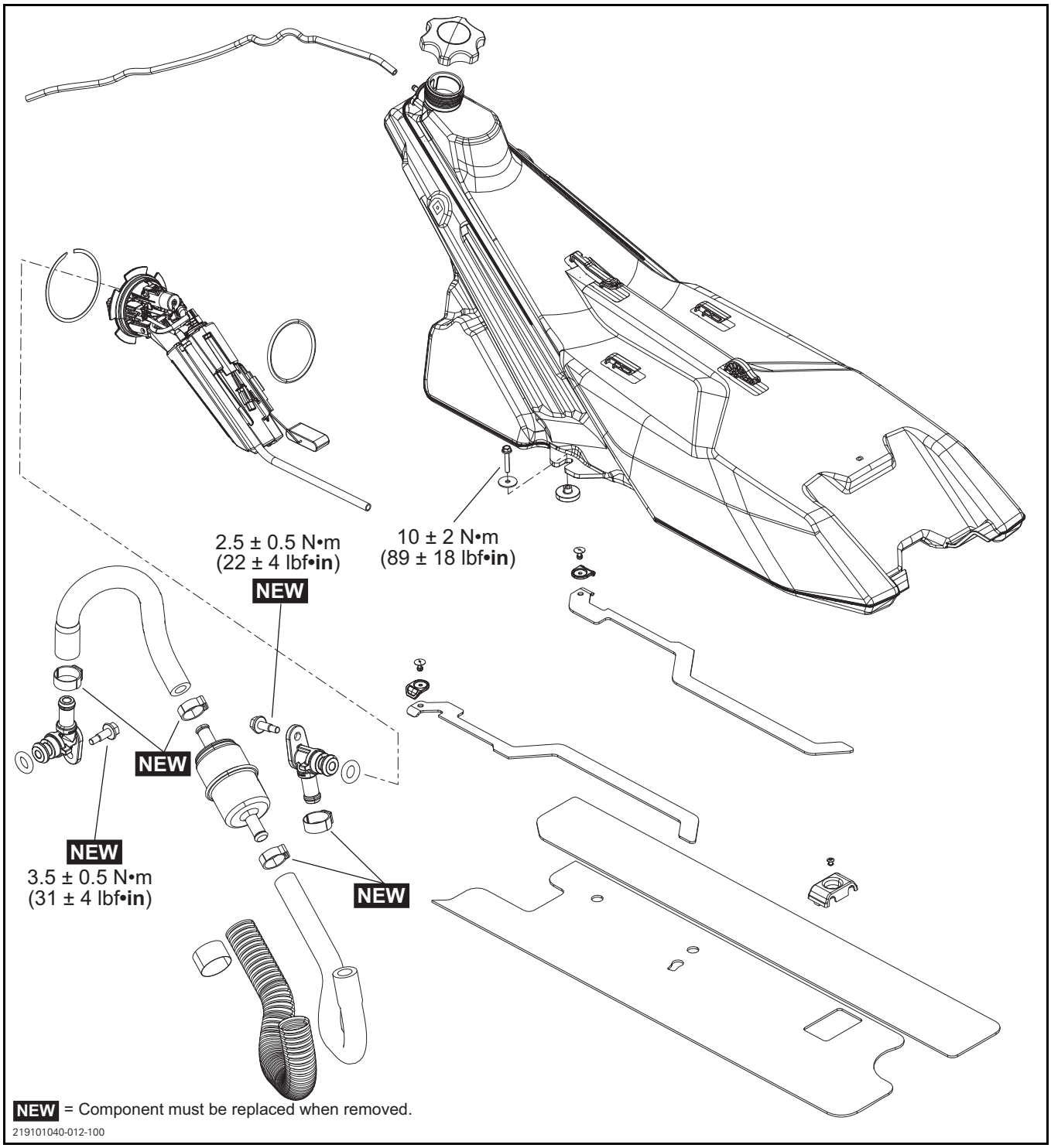
2.5 ± 0.5 N•m
(22 ± 4 lbf•in)
NEW
10 ± 2 N•m
(89 ± 18 lbf•in)
NEW
NEW
3.5 ± 0.5 N•m
(31 ± 4 lbf•in)
NEW
NEW = Component must be replaced when removed.
219101040-012-100

*20 and 24 in Track*

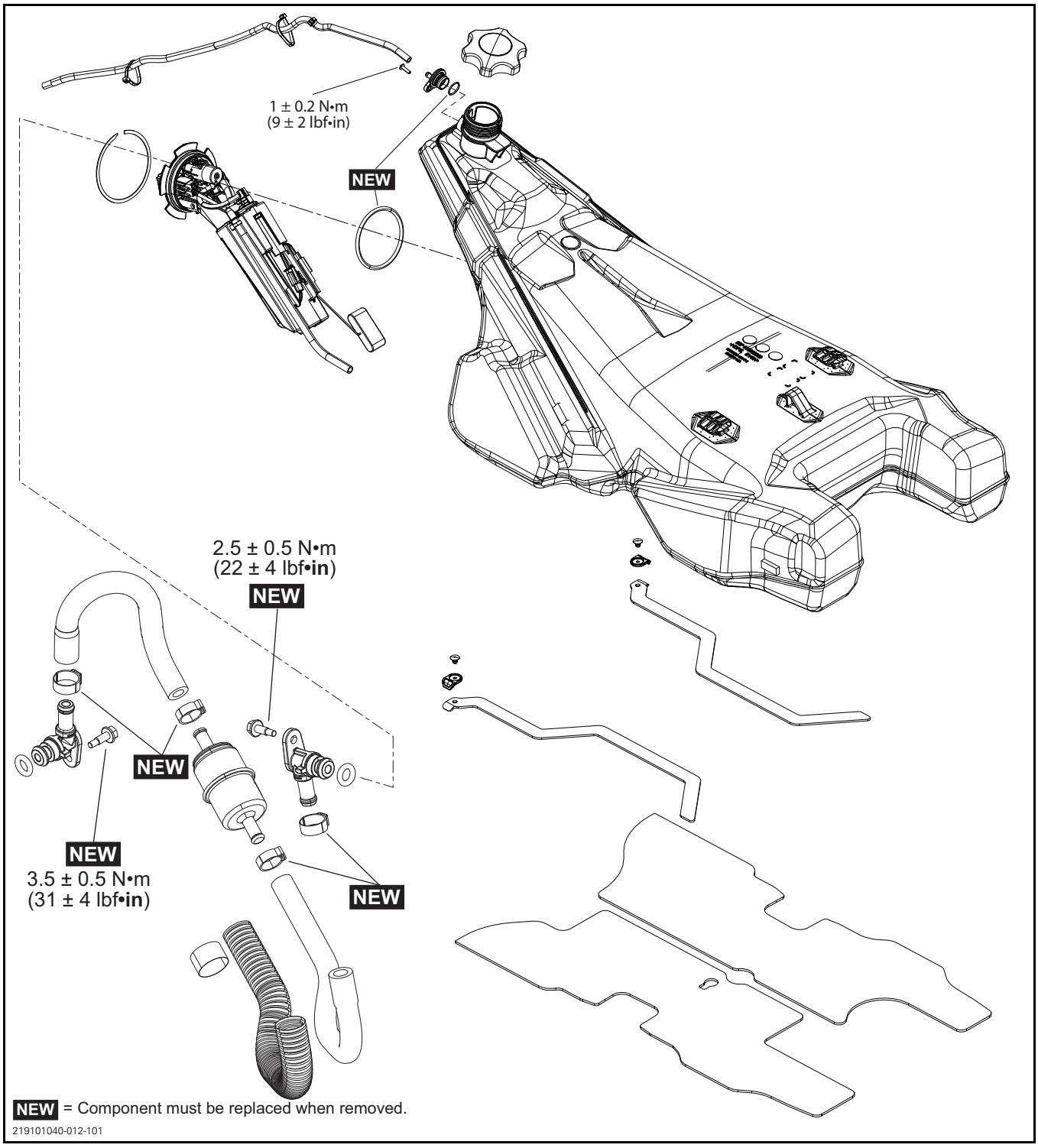

# GENERAL

NOTE: It is a good practice to check for fault codes using the BRP diagnostic software BUDS2 as a first troubleshooting step. Refer to *DIAGNOSTIC AND FAULT CODES*.

**⚠ WARNING**

Always disconnect the magneto connector prior to:
– Disconnecting any fuel hose.
– Removing a fuel injector.
– Removing a spark plug cable or spark plug.
Otherwise, if the engine is cranked, fuel vapors may ignite in presence of a spark creating a fire hazard.

When disconnecting a fuel line, cover the connection with an absorbent shop rag and proceed slowly to minimize spilling.

**⚠ WARNING**

Do not allow fuel to spill on hot engine parts and/or on electrical connectors. Wipe off any fuel spillage in the engine compartment. Fuel is flammable and explosive under certain conditions.

**⚠ WARNING**

After working on the fuel system, always carry out a fuel system pressurization test to check for leaks.

**⚠ WARNING**

Never remove the eyelet connectors from the fuel pressure regulator and the fuel hose connector. A bad connection may create a static electricity discharge causing a fire hazard.

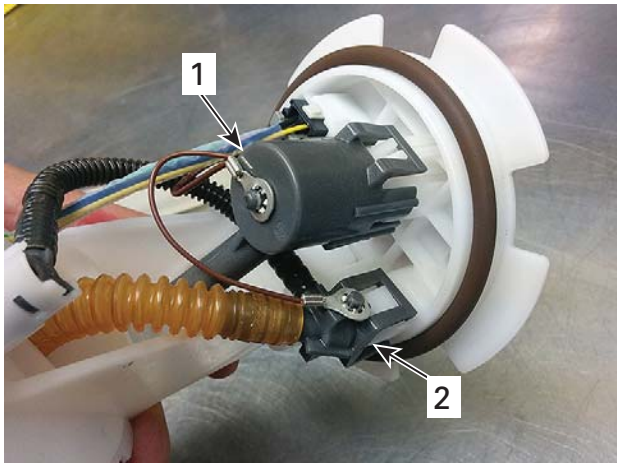

tmr2017-027-306_a

1. *Fuel pressure regulator*
2. *Fuel hose connector*

# SYSTEM DESCRIPTION

## Electric Fuel Pump

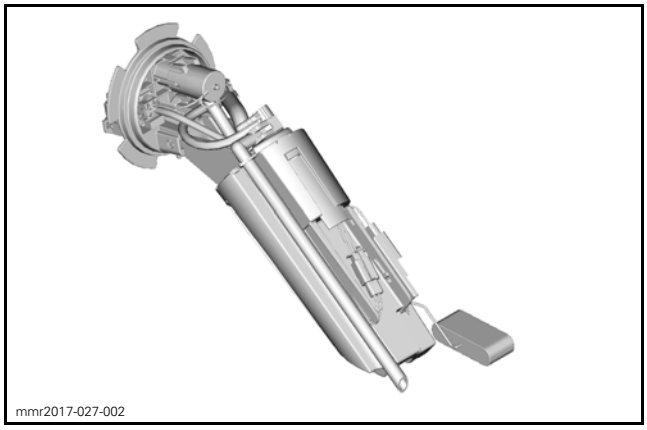
mmr2017-027-002

An electric fuel pump is mounted in the front center portion of the fuel tank.

A 12 Vdc high pressure fuel pump with an integrated jet pump is used.

As soon as the engine is cranking, the electric fuel pump turns on in preparation for the engine start. When the engine runs, the fuel pump is ON continuously to provide a constant fuel pressure to the injectors.

To ensure a constant delivery of fuel to the engine for all riding conditions when the fuel level is low, a rear pickup and a fuel pump reservoir is used.

The fuel pump reservoir is actually the housing of the fuel pump module in which the fuel pump is located. A check valve at the bottom of the housing allows the fuel in the tank to enter the fuel pump reservoir.

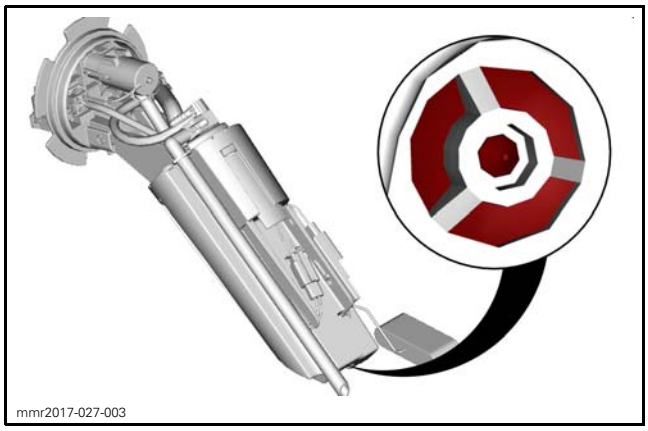


When the fuel pump runs, it draws the fuel from the fuel pump reservoir and feeds it to the injection system. This causes fuel in the tank to enter the fuel pump reservoir, by gravity, through its bottom inlet check valve.

At the same time, a portion of the fuel flow from the electric fuel pump flows through a jet pump that contains a venturi.

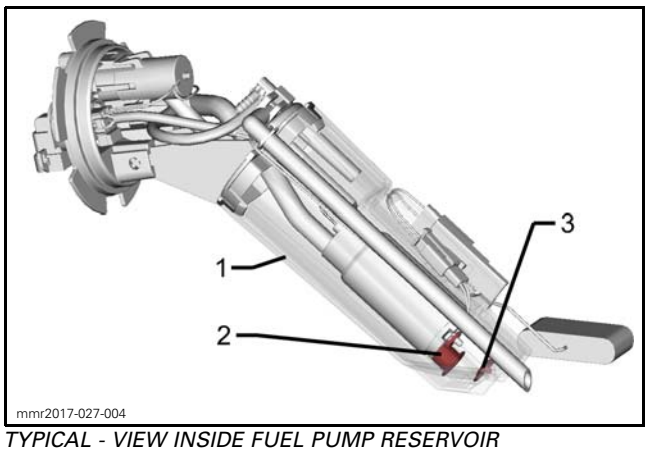


*TYPICAL - VIEW INSIDE FUEL PUMP RESERVOIR*
1. *Fuel pump reservoir*
2. *Bottom inlet*
3. *Check valve (open upwards)*

As the fuel accelerates through the venturi, it generates a low pressure area at a connection to the remote pickup, which draws fuel into the fuel pump reservoir from the remote pickup.

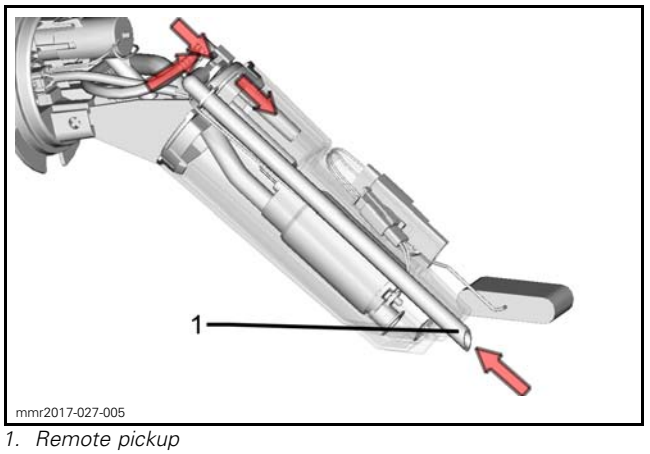


1. *Remote pickup*

When riding the vehicle on a level surface, fuel enters into the fuel pump reservoir through its check valve and through the remote pickup simultaneously, as long as there is enough fuel in the tank to cover the remote pickup.

When riding downhill with a low amount of fuel in the tank, the fuel moves towards the front of fuel tank. The fuel enters the fuel pump reservoir through the check valve only as there is no fuel at the remote pickup.

When riding uphill with a low amount of fuel in the tank, the fuel moves towards the rear of the fuel tank. The check valve closes and traps the fuel in the pump reservoir. The fuel pump continues to draw fuel from the fuel pump reservoir, which is now only fed by the jet pump using the remote pickup. This prevents air from being drawn into the fuel lines from the fuel tank.

The continuous fuel flow cools down the fuel pump.

## Fuel Pickup

Fuel enters the fuel pump reservoir from either a check valve at the bottom of the fuel pump reservoir, or from a remote pickup in the rear portion of the fuel tank.

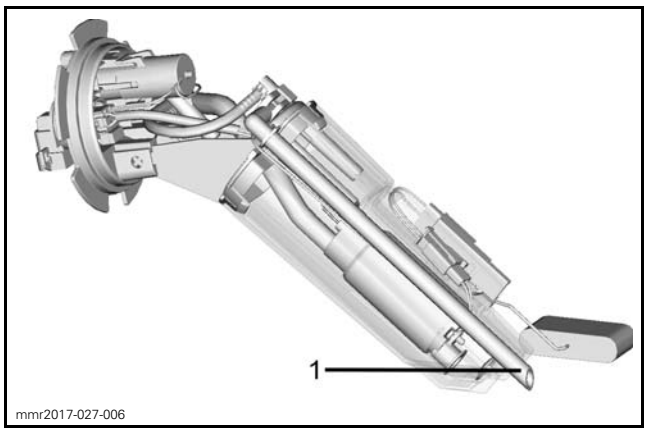


1. *Remote pickup*

## Fuel Pressure Regulator

An integrated fuel pressure regulator is mounted on the fuel pump flange. It is basically a spring loaded valve that opens and closes the path of fuel returning to the tank, thus maintaining a constant fuel pressure in the system.

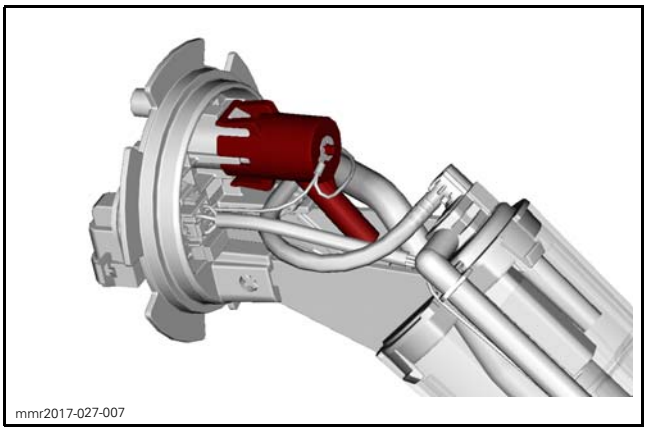
mmr2017-027-007

| FUEL PRESSURE |
| --- |
| Approximately 400 kPa ± 10 kPa (58 PSI ± 1 PSI) at 2000 RPM (will be lower at idle) |

Fuel pressure should drop less than 35 kPa (5 PSI) when engine stops running.

If a leak is present, pressure will continue to drop within the first minute after engine stops running.

## Fuel Tank Vent

The fuel tank is vented through a combination type check valve that allows ambient air pressure to enter fuel tank at all times.

As fuel is consumed by the engine, a negative pressure would occur in the fuel tank. This could eventually prevent the fuel pump from drawing enough fuel. The **negative pressure relieve function** of the valve allows the higher outside air pressure in

If pressure builds up and exceeds 7.58 kPa (1.1 PSI) in the fuel tank, the check valve opens and lets the excess pressure vent out of the tank.

## Fuel Filters

### Fuel Pump Pre-Filter

A fuel pump pre-filter is used at the electric fuel pump inlet. It is a replaceable nylon mesh filter located within the fuel pump module housing (fuel pump reservoir).

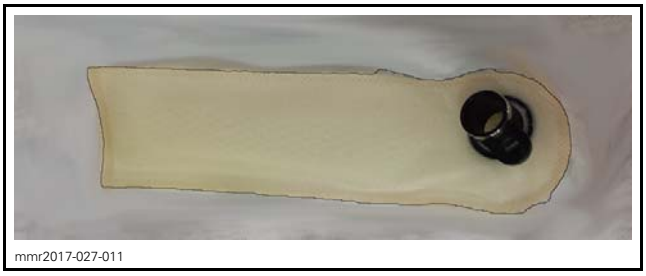
mmr2017-027-011

The fuel pump pre-filter protects the fuel pump and prevents clogging of the fuel passages within the fuel pump module.

### In-Line Fuel Filter

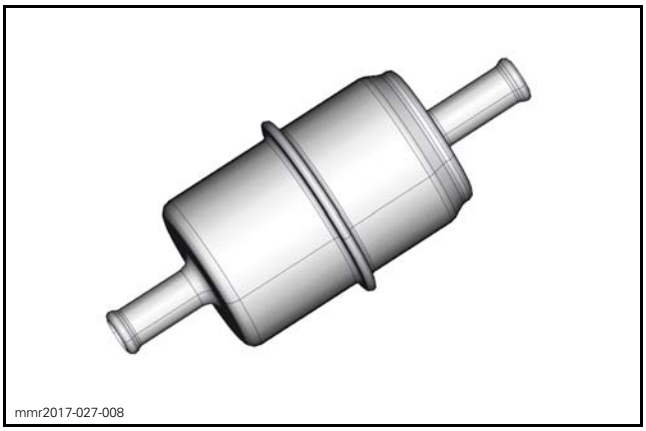
mmr2017-027-008

An in-line filter on the supply side is located between the fuel pump and the ECM.

It is a replaceable metallic canister type filter used to deliver dirt-free fuel to the injectors.

## Fuel Level Indication

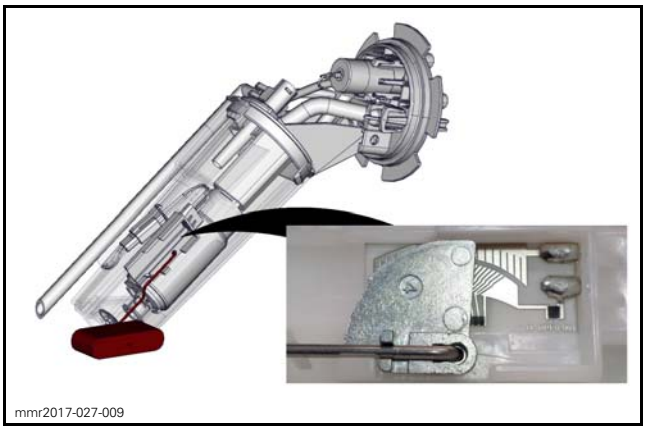
mmr2017-027-009

A float type fuel level sensor varies its resistance with fuel level thus providing a signal to the multifunction gauge for fuel level indication.

# MAINTENANCE

## INSPECTING THE FUEL LINES AND CONNECTIONS

Visually inspect fuel lines and connections for cracks or leaks.

## REPLACING THE IN-LINE FUEL FILTER

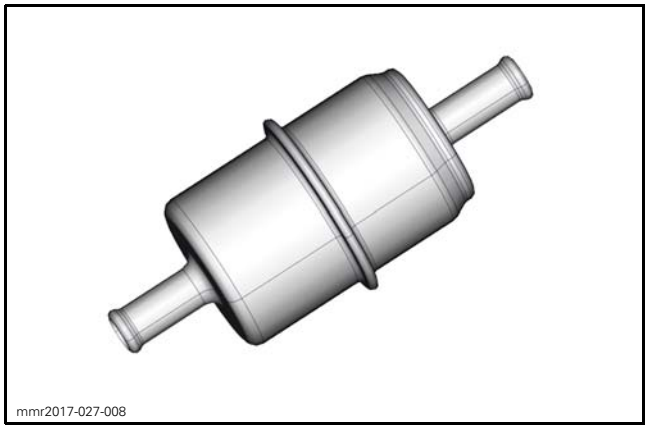
mmr2017-027-008

### Removing the In-line Fuel Filter

**⚠ WARNING**

**Work in a well ventilated area. Wipe up all spilled fuel.**

1. Release fuel pressure in the system. Refer to procedure in this subsection.
2. Remove the upper body module. Refer to *BODY* subsection.
3. Disconnect magneto connector.

**⚠ WARNING**

**The magneto connector must be disconnected to prevent any spark in the engine compartment and to remove power from the fuel pump. Otherwise, if the engine is cranked, fuel vapors may ignite in presence of a spark creating a fire hazard.**

4. Place a rag between fuel filter and oil injection tank.
5. Cut both Oetiker clamps securing the fuel filter.
6. Remove fuel filter from vehicle.

Dispose fuel filter as per your local environmental regulations.

### Installing the In-Line Fuel Filter

The installation is the reverse of the removal procedure. However, pay attention to the following.

Insert new Oetiker clamps on both hoses.

Install the new filter. Make sure printed arrow pointed towards the fuel rail.

Secure the fuel filter with new Oetiker clamps.

| REQUIRED TOOL | |
|---|---|
| OETIKER PLIER<br>(P/N 295 000 070) |  |

**⚠ WARNING**

**Ensure hose clamp is tight and that hose cannot turn on the fitting.**

When installation is complete, carry out a fuel system leak test. Refer to procedure in this subsection.

**⚠ WARNING**

**After working on the fuel system, carry out a fuel system pressurization test to check for leaks. Failure to carry out a fuel system leak test could result in severe injury or a life threatening situation should a leak occur.**

Reinstall all removed parts.

## INSPECTING AND CLEANING THE THROTTLE BODY

Clean throttle plates and throttle body bores.

| SERVICE PRODUCT |
|---|
| CLUTCH AND PULLEY FLANGE CLEANER PRO S1 (P/N 779244) |

# INSPECTION

## TESTING FUEL SYSTEM FOR LEAKS

Activate the fuel pump from the **Functions** page in BUDS2.

Check for fuel leaks.

**⚠ WARNING**

**After working on the fuel system, carry out a fuel system pressurization test to check for leaks. Failure to carry out a fuel system pressurization test could result in severe injury or a life threatening situation should a leak occur.**

# TESTING FUEL TANK FOR LEAKS

| REQUIRED TOOLS | |
|---|---|
| SMALL HOSE PINCHER (P/N 295 000 076) |  |
| LEAK TEST KIT (P/N 529 033 100) |  |
| VACUUM/PRESSURE PUMP (P/N 529 021 800) |  |

1. Fill up fuel tank.
2. Open the left side panel to access the fuel vent tube.
3. Install a small hose pincher on the vent tube.

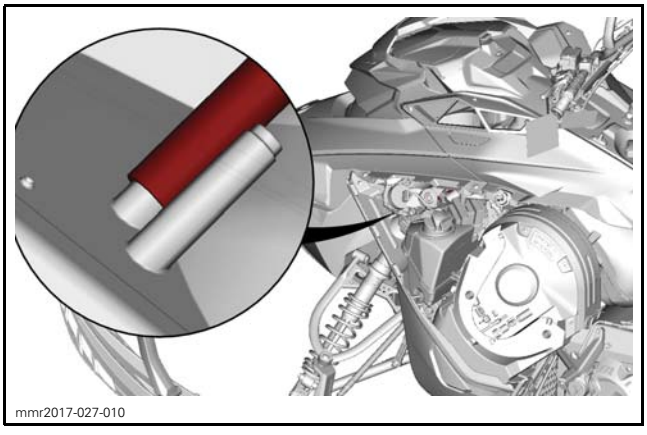

mmr2017-027-010

4. Install the appropriate test cap from the leak test kit on fuel tank inlet.
5. Install the vacuum/pressure pump on pressure test fuel cap.

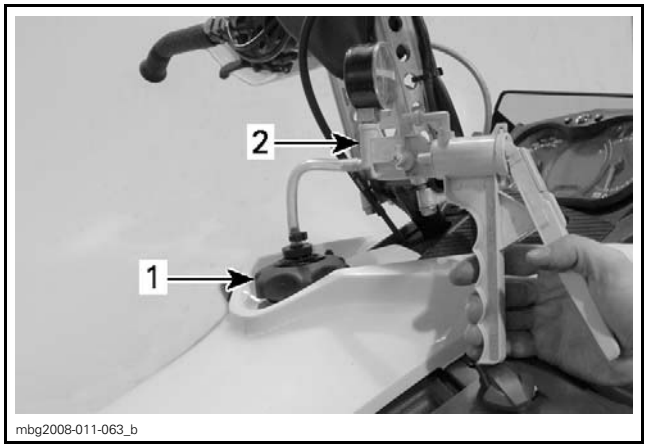


mbg2008-011-063_b

*TYPICAL*
*1. Pressure test fuel cap*
*2. Vacuum/pressure pump*

6. Set pump selector to pressure.
7. Pressurize fuel tank as follows.

| PRESSURE | TIME WITHOUT PRESSURE DROP |
|---|---|
| 21 kPa (3 PSI) | 3 minutes |

If pressure drops, locate fuel leak(s) and repair or replace leaking component(s).

To ease locating leak(s), spray soapy water on components; bubbles will indicate leak location(s).

## Fuel Tank Vent Valve Test

1. While the fuel tank is still pressurized as in the previous test, carry out the following:
2. Place a finger over the vent hose outlet.
3. When removing hose pincher, alternately touch and release vent hose outlet. You should feel pressurized air flowing out indicating the pressure relief valve function is working.
4. Release any remaining pressure in the fuel tank by slowly unscrewing fuel tank cap.
5. Remove the pressure test fuel cap.
6. Remove the fuel tank vent tube from its fitting on the lower left front body panel.
7. Install the vacuum/pressure pump on the vent tube and apply air pressure through the vent valve. Air must flow freely towards the fuel tank neck.

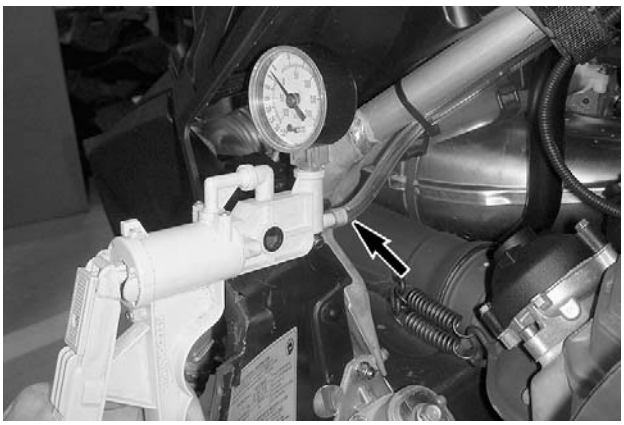
mmr2008-030-002_a

*TYPICAL - VACUUM/PRESSURE PUMP ON VENT TUBE*

NOTE: If fuel vent check valve does not function as indicated in test, replace vent valve.

8. Remove vacuum/pressure pump.
9. Install vent tube on its fitting.
10. Install normal fuel tank cap.

## TESTING FUEL PRESSURE

| REQUIRED TOOLS | |
|---|---|
| PRESSURE GAUGE (P/N 529 036 395) |  |
| T FITTING FUEL PRESSURE (P/N 529 036 509) |  |

Open right hand side panel.

Move rewind starter handle assembly (applicable models).

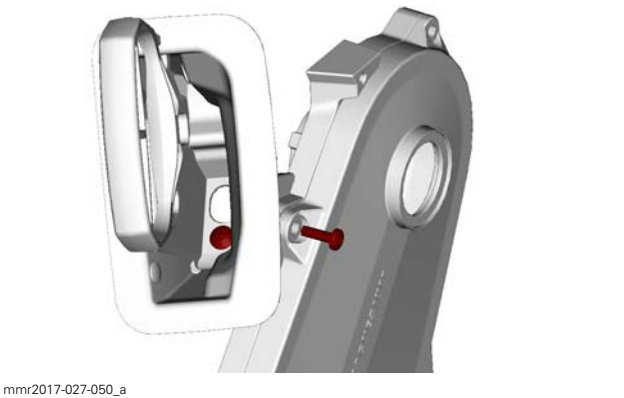
mmr2017-027-050_a

The pressure test provides an indication of the available fuel pressure at the fuel pump outlet. It validates the pressure regulator and the fuel pump.

1. Ensure there is enough gas in fuel tank.
2. Install a rag under the fuel filter to catch fuel spillage.
3. Remove fuel filter.

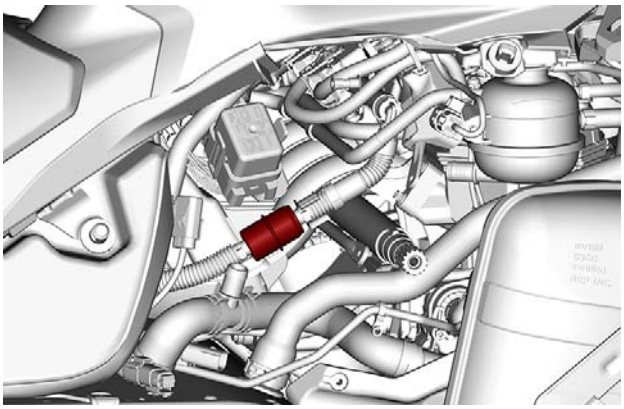
219101015-011-001

4. Install the T fitting tool in place of the fuel filter. Secure with gear clamps.


219101040-012-001

5. Install the pressure gauge on the T fitting tool.

**⚠ WARNING**

**When carrying out pressure test, ensure fuel is not leaking from test equipment onto hot exhaust system or electrical components. Ensure fuel hose do not come into contact with hot engine parts or hot exhaust system.**

6. Start engine.
7. Run engine above 2000 RPM and observe the fuel pressure.

| FUEL PRESSURE |
|---|
| 400 kPa ± 10 kPa (58 PSI ± 1 PSI) |

| FUEL PRESSURE TROUBLESHOOTING | |
|---|---|
| RESULT | POSSIBLE CAUSE |
| Pressure above specifications | Defective fuel regulator |
| Pressure below specifications | Clogged fuel filter |
| | Poor electrical connection |
| | Defective fuel regulator |
| | Defective fuel pump |
| | Leak in the fuel system circuit |

8. Stop engine.

Fuel pressure should remain stable.

9. If fuel pressure drops, check the following for leaks:
   – Tools
   – Hoses
   – Fuel injectors
   – Fuel pressure regulator
   – Fuel pump.
10. Bleed away any remaining fuel in the pressure gauge and fuel hose adapter using the bleed valve on the fuel hose adapter.
11. Remove pressure gauge and T-fitting fuel pressure.
12. Reinstall the fuel filter with NEW Oetiker clamps Refer to *FUEL HOSE AND OETIKER CLAMPS* in this subsection..
13. Reinstall all remaining removed parts.

# PROCEDURES

## FUEL HOSE AND OETIKER CLAMPS

### Replacing Fuel Hoses

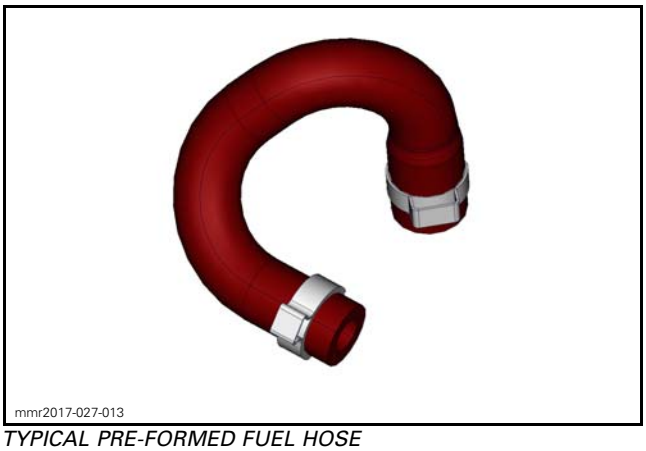


*TYPICAL PRE-FORMED FUEL HOSE*

When replacing fuel hoses, be sure to use hoses as available from BRP parts department. This will ensure continued proper and safe operation.

**⚠ WARNING**

Use of fuel lines other than those recommended by BRP may compromise fuel system integrity.

**⚠ WARNING**

– Never use a hose pincher on high pressure hoses.
– Never change the routing of a fuel hose.
– Always reinstall the corrugated protective tubing on fuel hoses.
– Secure fuel hoses using the appropriate locking tie or fastener to prevent contact with sharp edges or hot, rotating and moving parts.
– After connecting a hose or a quick connect fitting, pull on the hose near the fitting to make sure it is securely locked.
– Always validate fuel system tightness by performing a *FUEL SYSTEM PRESSURIZATION AND LEAK TEST*.

## Replacing Oetiker Clamps

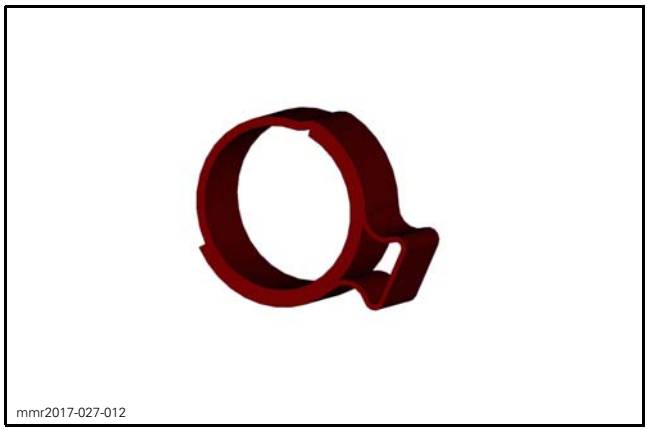
mmr2017-027-012

| REQUIRED TOOL | |
|---|---|
| OETIKER PLIER<br>(P/N 295 000 070) |  |

**⚠ WARNING**

**Whenever removing a hose in the fuel system, always use new Oetiker clamps at assembly.**

# FUEL TANK

## Removing the Fuel Tank

1. Remove seat.

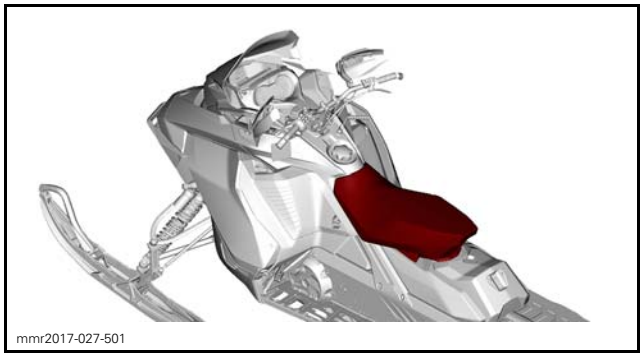
mmr2017-027-501

2. Remove upper body module. Refer to *BODY* subsection.

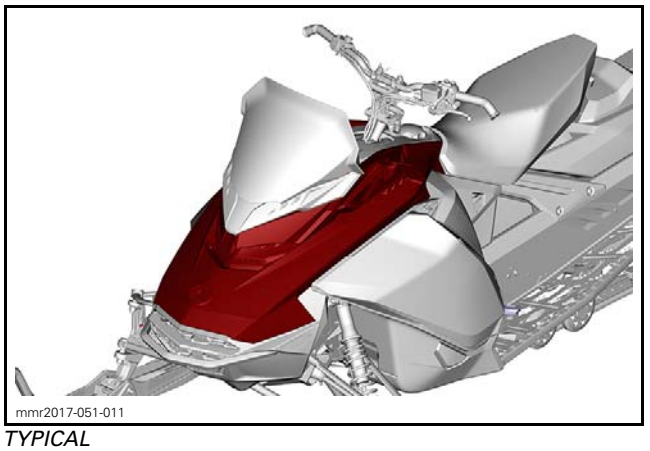
mmr2017-051-011

*TYPICAL*

3. Remove rear console. Refer to *BODY* subsection.

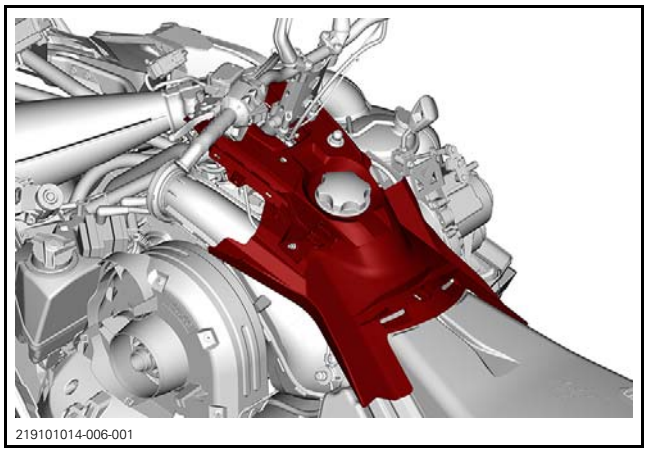
219101014-006-001

4. Remove the battery.

*16 in Track*

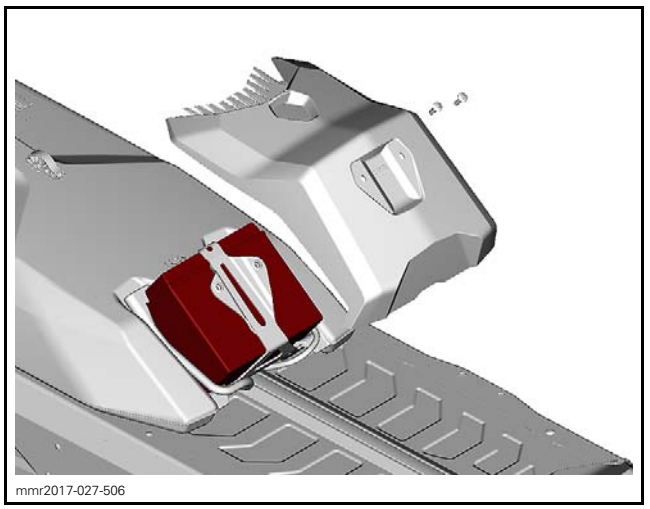
mmr2017-027-506

*20 and 24 in Track*

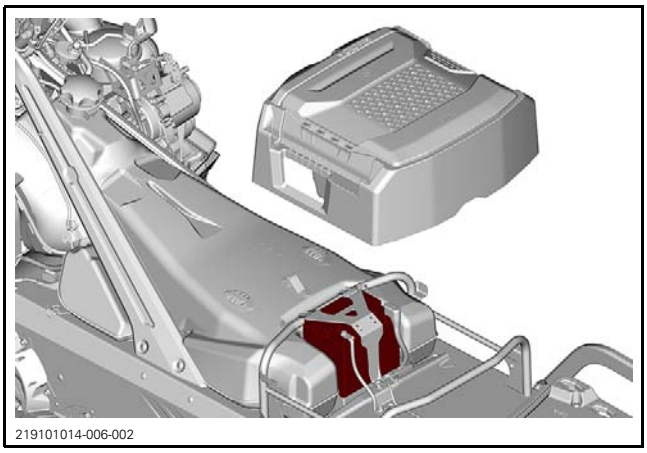


*All Models*

5. Remove rear frame members. Refer to *FRAME* subsection.

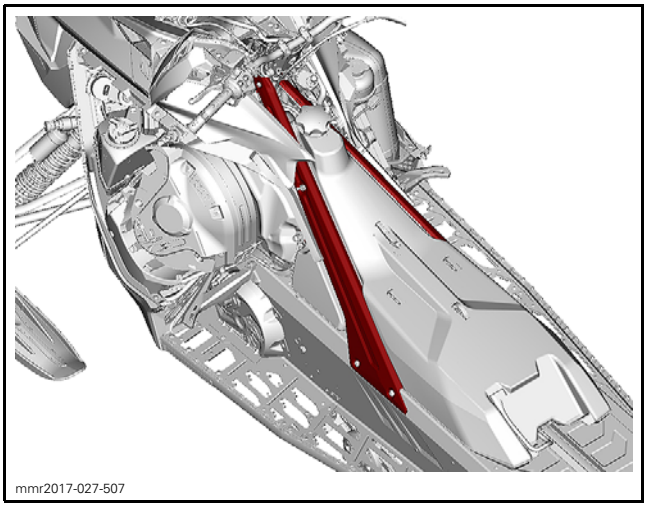


*16 in Track*

6. Remove and discard fuel tank retaining screws.

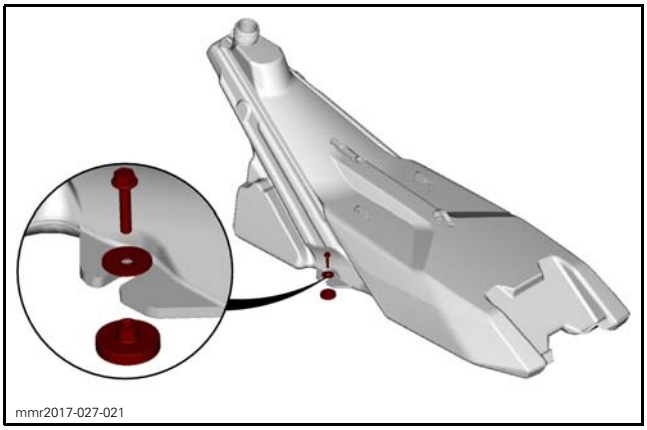


*All Models*

7. Disconnect fuel tank vent.

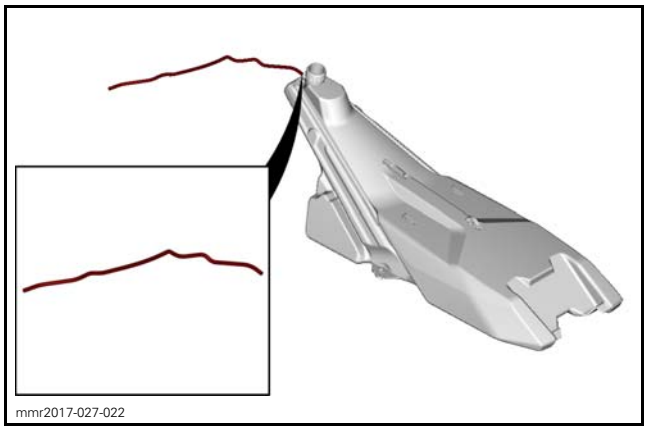


8. Remove fuel pump electrical connector.

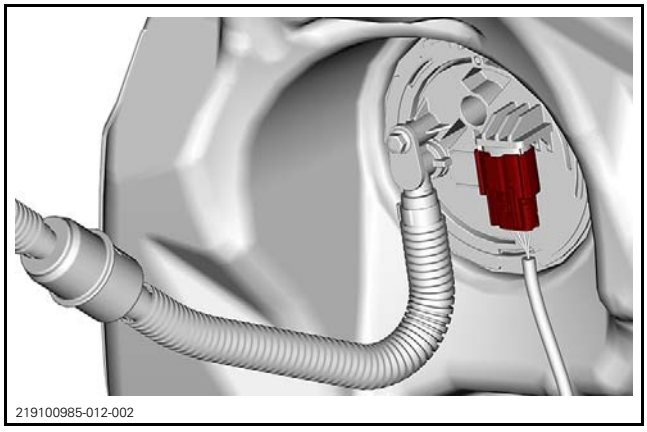


9. Disconnect fuel hose from fuel rail.
10. Remove fuel tank.

### Installing the Fuel Tank

The installation is the reverse of the removal procedure. However, pay attention to the following.

Refer to appropriate subsections to properly reinstall all removed components.

Pressurize and test fuel system for leaks.

## FUEL PUMP

### Relieving Fuel Pressure

1. Connect vehicle to BUDS2, refer to the *COMMUNICATION TOOLS* subsection.
2. From the **Functions** page, relieve fuel pressure.

## Activating the Fuel Pump with BUDS2

NOTE: Activating the fuel pump as described in this procedure can be used for purging air from the fuel system whenever a fuel hose has been disconnected and reconnected. The pump should be activated for 15 seconds to ensure proper purging of the system.

1. Connect vehicle to BUDS2 software, refer to *COMMUNICATION TOOLS* subsection.
2. From the **Functions** page, activate the fuel pump.
3. Listen for fuel pump operation.

If you do not hear the pump come ON, select the **Faults** tab in BUDS2 and check for fault codes.

If there is no fault code, connect a known good fuel pump to the vehicle harness (in parallel) and repeat the test.

NOTE: No voltage test can be done when the fuel pump is disconnected.

If the second fuel pump functions when connected to the vehicle harness, then replace the fuel pump installed in the vehicle.

## Removing the Fuel Pump

1. Remove the fuel tank.
2. Remove fuel pump assembly snap ring from fuel tank.


mmr2017-027-026

3. Remove and discard fuel pump gasket.

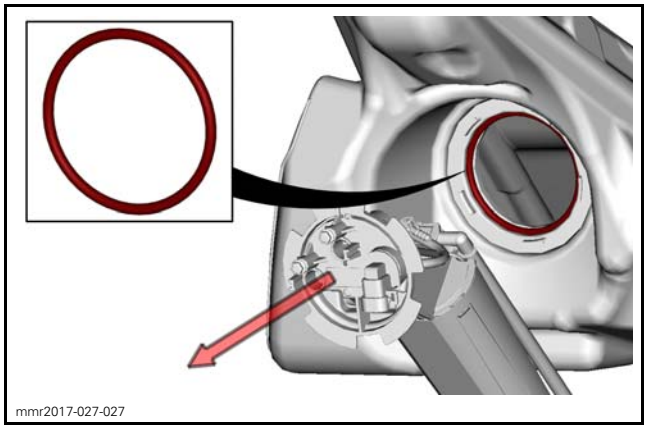
mmr2017-027-027

4. Visually inspect for broken or damaged ground wires, if any issue are found, the module should be replaced.

## Installing the Fuel Pump

The installation is the reverse of the removal procedure. However, pay attention to the following.

Make sure the remote pick-up is inserted all the way to the rear of fuel tank and does not interfere with the fuel level sensor float.

Install a **NEW** gasket on the fuel pump prior to installing the pump in the tank.

Ensure the fuel pump snap ring is fully engaged with the gap on top. Refer to image in removal procedure.

NOTE: The gasket must be installed on the fuel tank side so it is located between the pump and the fuel tank.

Install fuel tank.

**⚠ WARNING**

**After working on the fuel system, carry out a fuel system pressurization test to check for leaks. Failure to carry out a fuel system leak test could result in severe injury or a life threatening situation should a leak occur.**

# FUEL PUMP INLET FILTER

## Replacing the Fuel Pump Inlet Filter

1. Remove fuel pump assembly from fuel tank. Refer to procedure in this subsection.
2. Free the wires of the fuel level sensor of the fuel pump reservoir.

***NOTICE*** **Do not pull / push on wires or metal terminals that connect the grounding wires to the plastic parts. Keep hands and tools away from this area.**

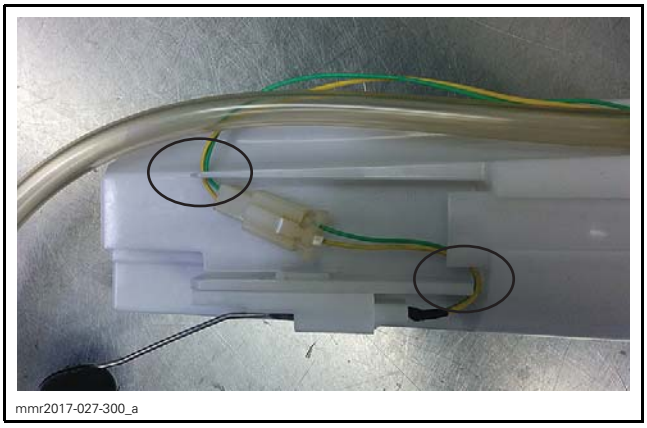
mmr2017-027-300_a

3. Unlock fuel pump reservoir by carefully inserting a small screwdriver between the tab and the fuel pump reservoir.

**NOTICE** Do not push directly on tabs or twist the screwdriver.

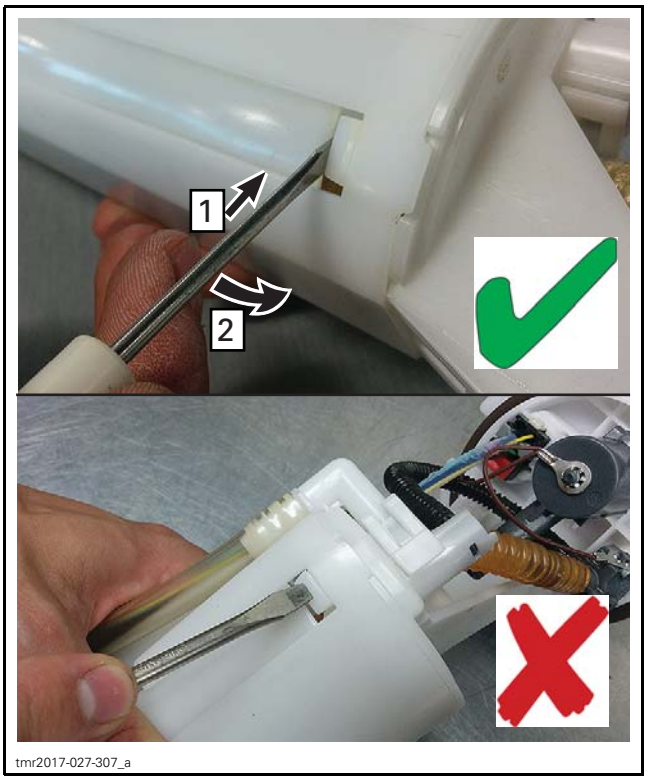

tmr2017-027-307_a

4. Completely remove fuel pump reservoir by pulling it carefully.

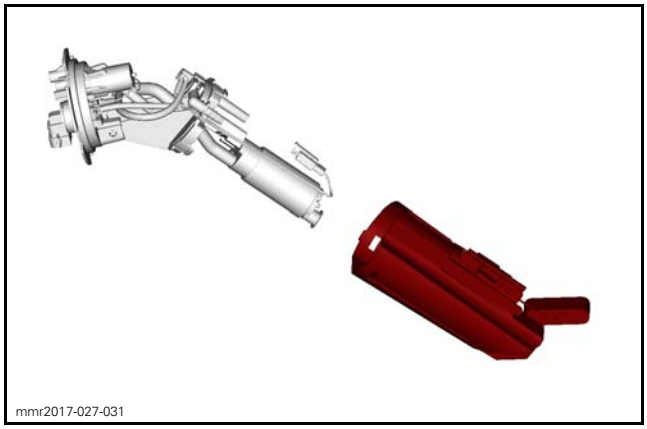
mmr2017-027-031

**NOTICE** To avoid damaging wires, Pull the reservoir carefully and do not let reservoir hang by wires.

5. Remove inlet fuel pump filter by pulling on it. If the filter is hard to remove, pry the filter gently using a small screwdriver.

**NOTICE** Be careful to avoid scratching the outside diameter of the pump inlet fitting where the filter fits.


mmr2017-027-302_a

6. Discard inlet fuel pump filter and steel ring.
7. Install new fuel pump inlet filter.
   - 7.1 Insert inlet filter onto fuel pump by pressing it downward.
   - 7.2 Push the filter on until the fitting bottoms out on the pump inlet face, there should be no gap.

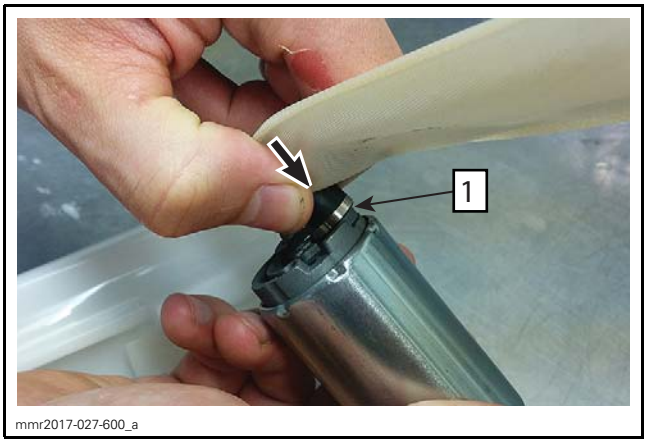


*1. No gap here*

7.3 Ensure that the filter hole is properly positioned into the pin.

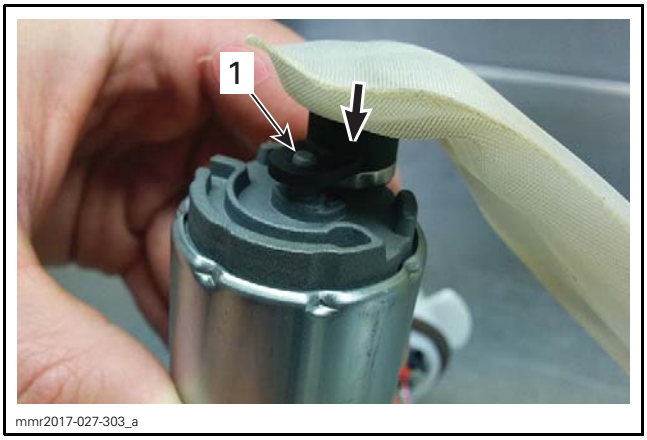


*1. Pin*

8. Install fuel pump reservoir carefully and ensure that all parts are properly positioned.

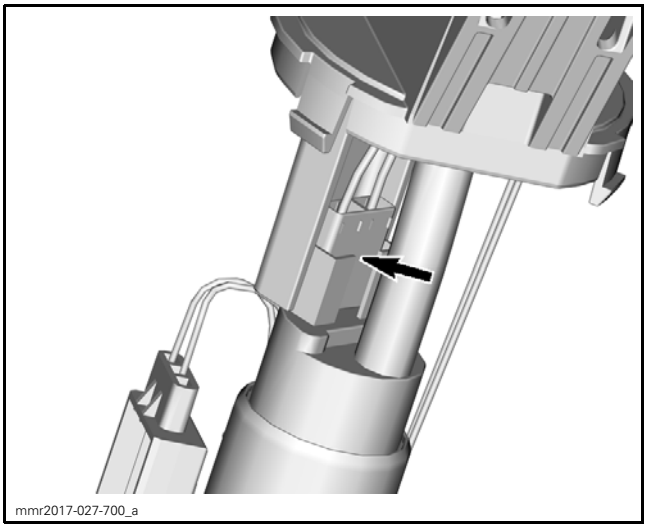


*ELECTRICAL CONNECTOR MUST BE IN THIS POSITION*

NOTE: Make sure the pump motor is positioned between the molded ribs in the reservoir.

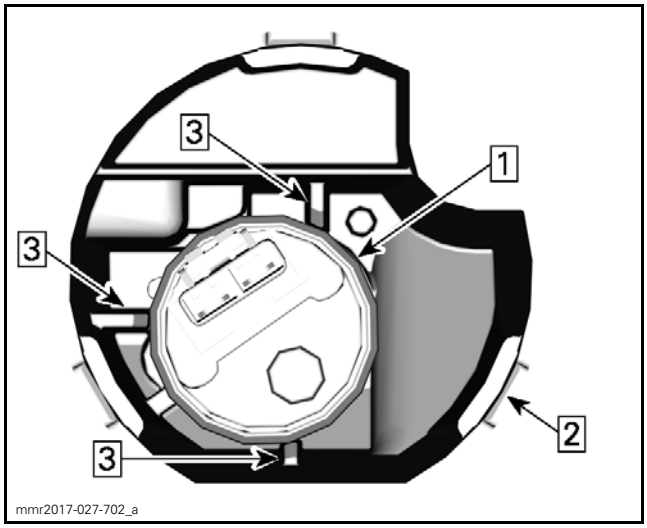


*1. Fuel pump motor*
*2. Reservoir*
*3. Ribs*

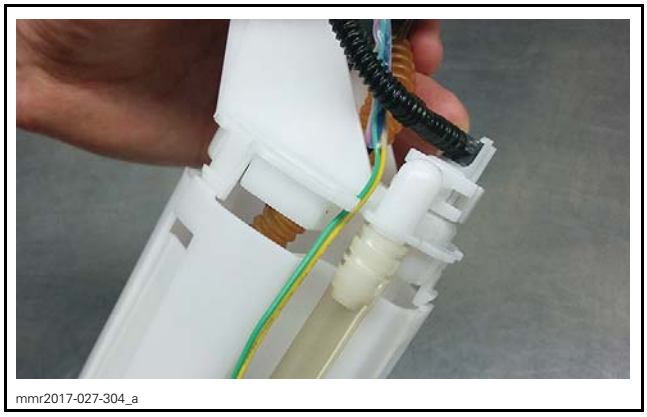


9. Ensure that fuel tank reservoir tabs are properly locked.
10. Route the fuel level sensor wires properly.

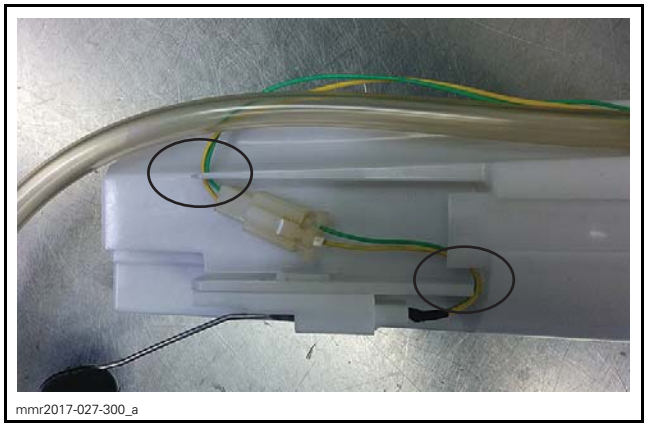


11. Reinstall fuel pump in fuel tank. Refer to procedure in this subsection.

# FUEL LEVEL SENSOR

NOTE: Verify the gauge functions related to the fuel level sensor before testing the sensor. Refer to *GAUGE* subsection.

## Testing Fuel Level Sensor Resistance

1. Remove fuel pump from fuel tank, refer to *FUEL PUMP* in this subsection.
2. Ensure the fuel level sensor is properly connected in the fuel pump module.
3. Measure the resistance at the fuel pump connector **(FP)**.

| FUEL LEVEL SENSOR BENCH TEST | | |
|---|---|---|
| PROBE | FLOAT POSITION | RESISTANCE |
| FP- B to FP-D | Empty | 95 Ω ± 5 Ω |
| | Full | 9 Ω ± 2 Ω |

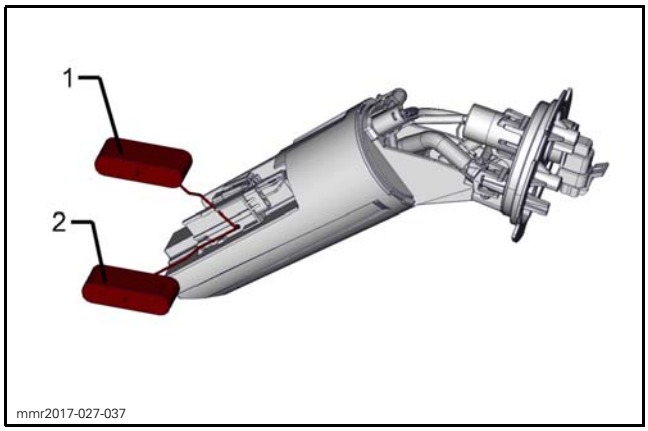


*TYPICAL FUEL PUMP FLOAT*
*1. Full position*
*2. Empty position*

4. When fuel level sensor travels from full to empty or vice-versa, there should be a constant linearity to the resistance readings. Any spike or drop of resistance indicates a "flat spot" in the fuel level sensor circuitry.

If fuel level sensor fails bench test, replace the fuel level sensor.

## Replacing the Fuel Level Sensor

1. Remove the fuel pump.

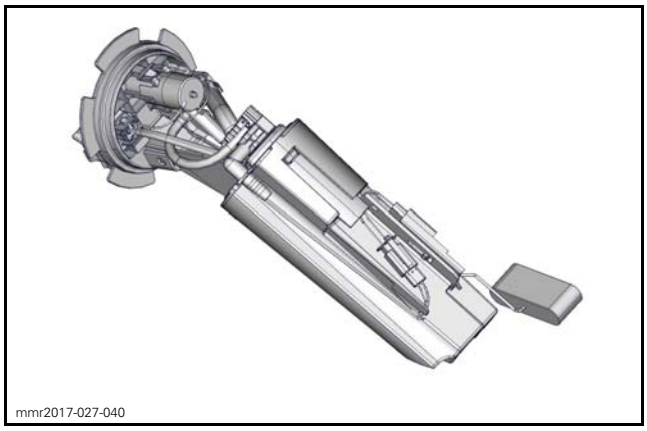


2. Disconnect fuel level sensor connector.

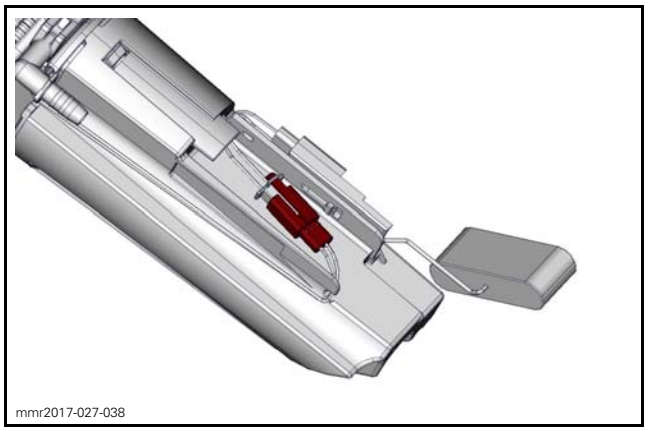


3. Slide the potentiometer out of the fuel pump reservoir.

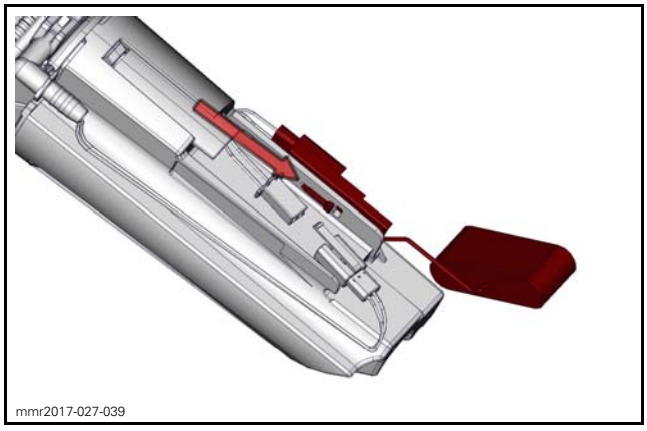


4. Remove fuel level sensor.
5. Replace the fuel level sensor with a new one and reverse steps.

# FUEL TANK AND FUEL PUMP (ACE)

## SERVICE TOOLS

| Description | Part Number | Page |
|---|---|---|
| LEAK TEST KIT | 529 033 100 | 158 |
| OETIKER PLIER | 295 000 070 | 157, 160 |
| PRESSURE GAUGE | 529 036 395 | 159 |
| SMALL HOSE PINCHER | 295 000 076 | 158 |
| T FITTING FUEL PRESSURE | 529 036 509 | 159 |
| VACUUM/PRESSURE PUMP | 529 021 800 | 158 |

## SERVICE PRODUCTS

| Description | Part Number | Page |
|---|---|---|
| CLUTCH AND PULLEY FLANGE CLEANER PRO S1 | 779244 | 157 |

*16 in Track*

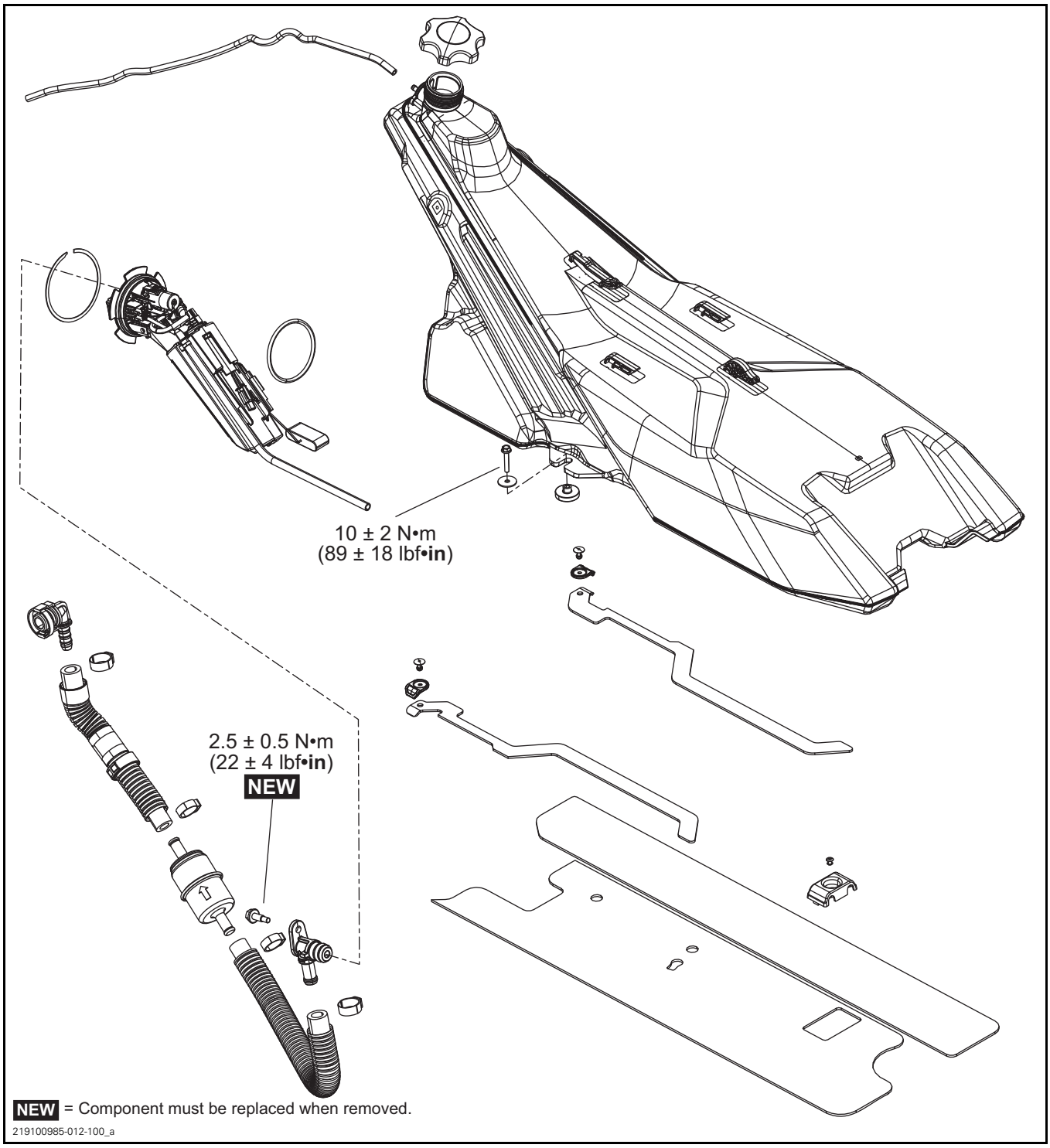
10 ± 2 N•m
(89 ± 18 lbf•in)
2.5 ± 0.5 N•m
(22 ± 4 lbf•in)
NEW
NEW = Component must be replaced when removed.
219100985-012-100_a

*20 in Track*

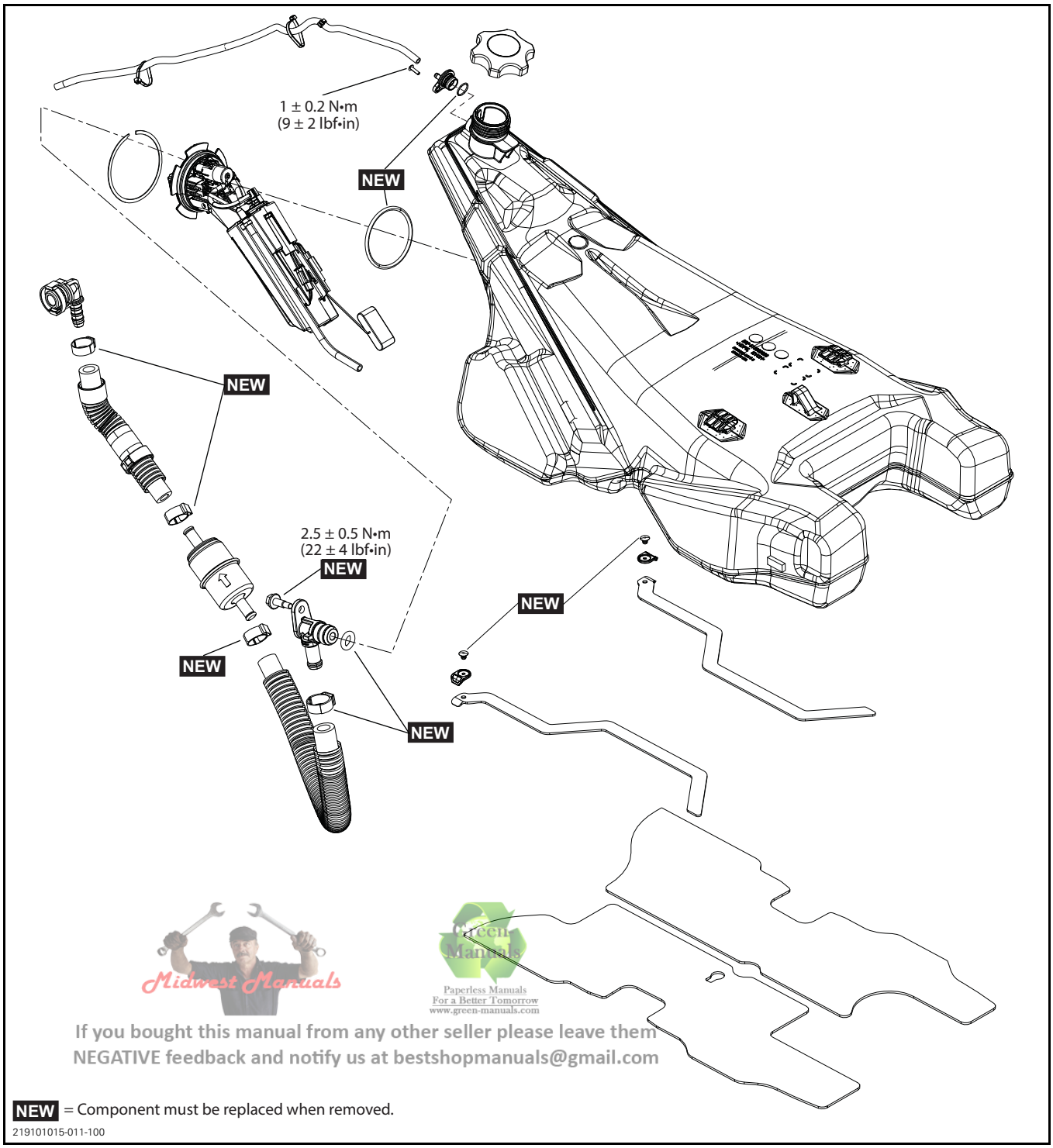


Midwest Manuals
Green Manuals
Paperless Manuals
For a Better Tomorrow
www.green-manuals.com
If you bought this manual from any other seller please leave them
NEGATIVE feedback and notify us at bestshopmanuals@gmail.com

# GENERAL

NOTE: It is a good practice to check for fault codes using the BRP diagnostic software BUDS2 as a first troubleshooting step. Refer to *DIAGNOSTIC AND FAULT CODES*.

**⚠ WARNING**

Always disconnect the magneto connector prior to:
– Disconnecting any fuel hose.
– Removing a fuel injector.
– Removing a spark plug cable or spark plug.
Otherwise, if the engine is cranked, fuel vapors may ignite in presence of a spark creating a fire hazard.

When disconnecting a fuel line, cover the connection with an absorbent shop rag and proceed slowly to minimize spilling.

**⚠ WARNING**

Do not allow fuel to spill on hot engine parts and/or on electrical connectors. Wipe off any fuel spillage in the engine compartment. Fuel is flammable and explosive under certain conditions.

**⚠ WARNING**

After working on the fuel system, always carry out a fuel system pressurization test to check for leaks.

**⚠ WARNING**

Never remove the eyelet connectors from the fuel pressure regulator and the fuel hose connector. A bad connection may create a static electricity discharge causing a fire hazard.

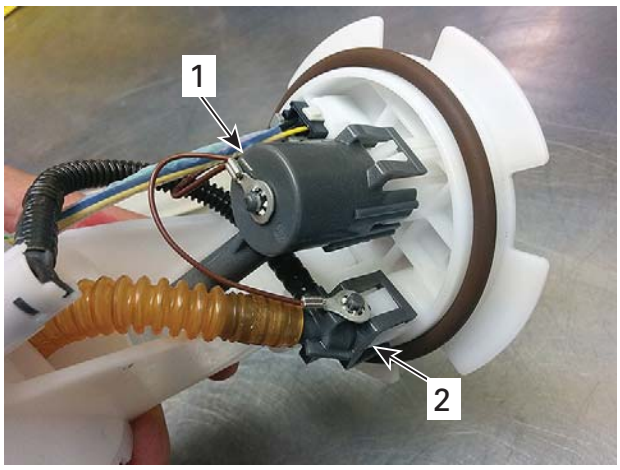

tmr2017-027-306_a

1. *Fuel pressure regulator*
2. *Fuel hose connector*

# SYSTEM DESCRIPTION

## Electric Fuel Pump

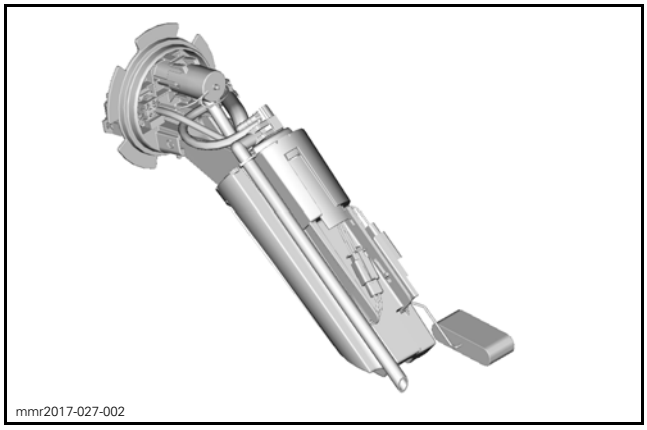
mmr2017-027-002

An electric fuel pump is mounted in the front center portion of the fuel tank.

A 12 Vdc high pressure fuel pump with an integrated jet pump is used.

As soon as the engine is cranking, the electric fuel pump turns on in preparation for the engine start. When the engine runs, the fuel pump is ON continuously to provide a constant fuel pressure to the injectors.

To ensure a constant delivery of fuel to the engine for all riding conditions when the fuel level is low, a rear pickup and a fuel pump reservoir is used.

The fuel pump reservoir is actually the housing of the fuel pump module in which the fuel pump is located. A check valve at the bottom of the housing allows the fuel in the tank to enter the fuel pump reservoir.

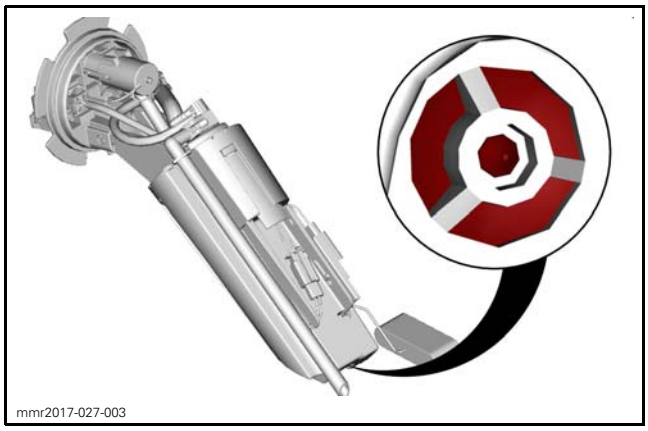


When the fuel pump runs, it draws the fuel from the fuel pump reservoir and feeds it to the injection system. This causes fuel in the tank to enter the fuel pump reservoir, by gravity, through its bottom inlet check valve.

At the same time, a portion of the fuel flow from the electric fuel pump flows through a jet pump that contains a venturi.

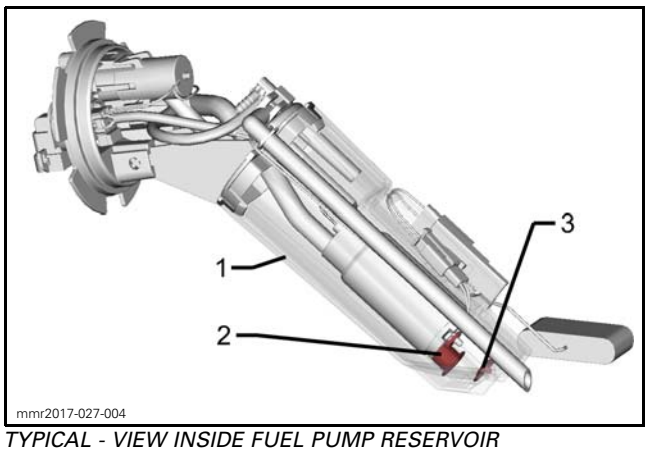


*TYPICAL - VIEW INSIDE FUEL PUMP RESERVOIR*
1. *Fuel pump reservoir*
2. *Bottom inlet*
3. *Check valve (open upwards)*

As the fuel accelerates through the venturi, it generates a low pressure area at a connection to the remote pickup, which draws fuel into the fuel pump reservoir from the remote pickup.

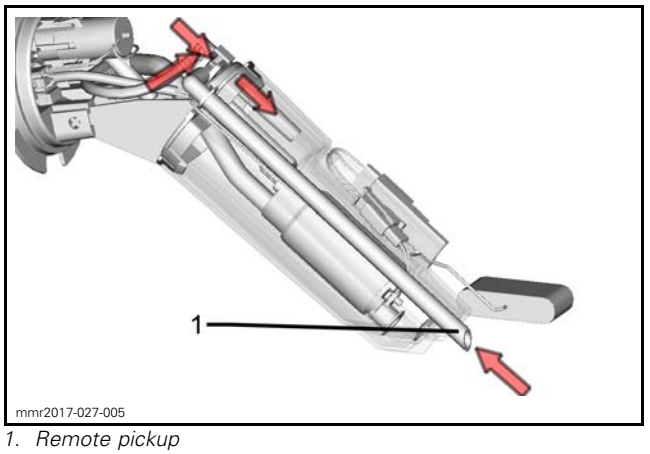


1. *Remote pickup*

When riding the vehicle on a level surface, fuel enters into the fuel pump reservoir through its check valve and through the remote pickup simultaneously, as long as there is enough fuel in the tank to cover the remote pickup.

When riding downhill with a low amount of fuel in the tank, the fuel moves towards the front of fuel tank. The fuel enters the fuel pump reservoir through the check valve only as there is no fuel at the remote pickup.

When riding uphill with a low amount of fuel in the tank, the fuel moves towards the rear of the fuel tank. The check valve closes and traps the fuel in the pump reservoir. The fuel pump continues to draw fuel from the fuel pump reservoir, which is now only fed by the jet pump using the remote pickup. This prevents air from being drawn into the fuel lines from the fuel tank.

The continuous fuel flow cools down the fuel pump.

## Fuel Pickup

Fuel enters the fuel pump reservoir from either a check valve at the bottom of the fuel pump reservoir, or from a remote pickup in the rear portion of the fuel tank.

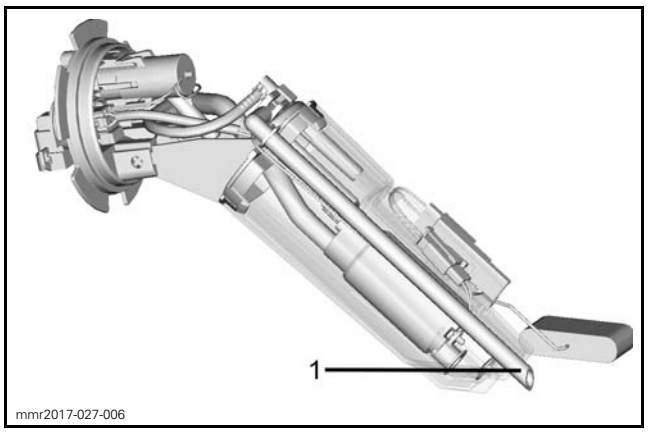


1. *Remote pickup*

## Fuel Pressure Regulator

An integrated fuel pressure regulator is mounted on the fuel pump flange. It is basically a spring loaded valve that opens and closes the path of fuel returning to the tank, thus maintaining a constant fuel pressure in the system.

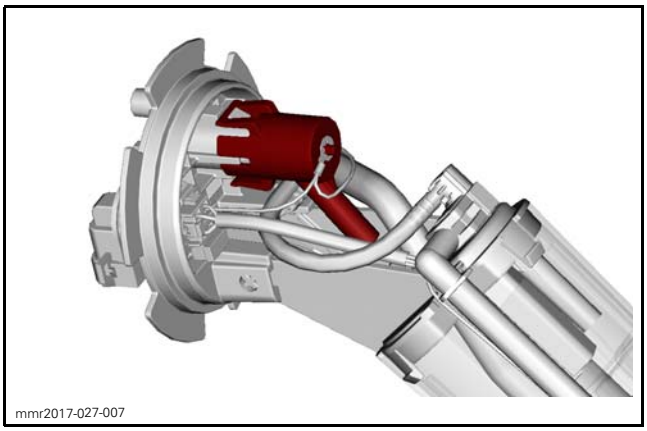

mmr2017-027-007

| FUEL PRESSURE |
| --- |
| Approximately 400 kPa ± 10 kPa (58 PSI ± 1 PSI) at 2000 RPM (will be lower at idle) |

Fuel pressure should drop less than 35 kPa (5 PSI) when engine stops running.

If a leak is present, pressure will continue to drop within the first minute after engine stops running.

## Fuel Tank Vent

The fuel tank is vented through a combination type check valve that allows ambient air pressure to enter fuel tank at all times.

As fuel is consumed by the engine, a negative pressure would occur in the fuel tank. This could eventually prevent the fuel pump from drawing enough fuel. The **negative pressure relieve function** of the valve allows the higher outside air pressure in

If pressure builds up and exceeds 7.58 kPa (1.1 PSI) in the fuel tank, the check valve opens and lets the excess pressure vent out of the tank.

## Fuel Filters

### Fuel Pump Pre-Filter

A fuel pump pre-filter is used at the electric fuel pump inlet. It is a replaceable nylon mesh filter located within the fuel pump module housing (fuel pump reservoir).

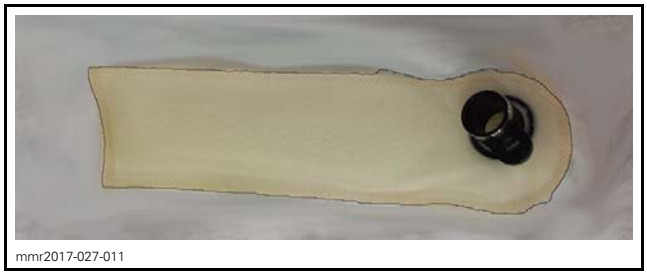

mmr2017-027-011

The fuel pump pre-filter protects the fuel pump and prevents clogging of the fuel passages within the fuel pump module.

### In-Line Fuel Filter

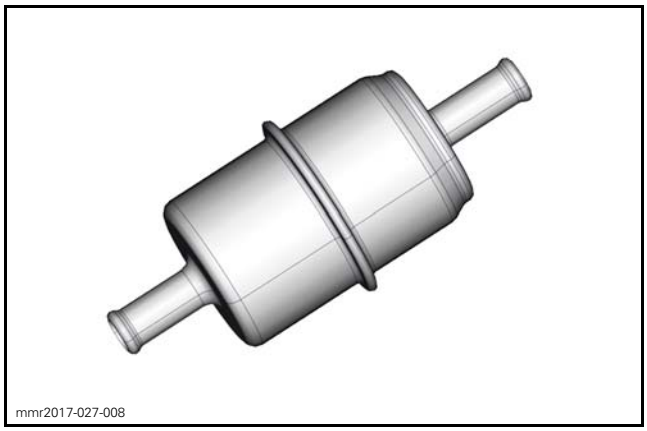

mmr2017-027-008

An in-line filter on the supply side is located between the fuel pump and the ECM.

It is a replaceable metallic canister type filter used to deliver dirt-free fuel to the injectors.

## Fuel Level Indication

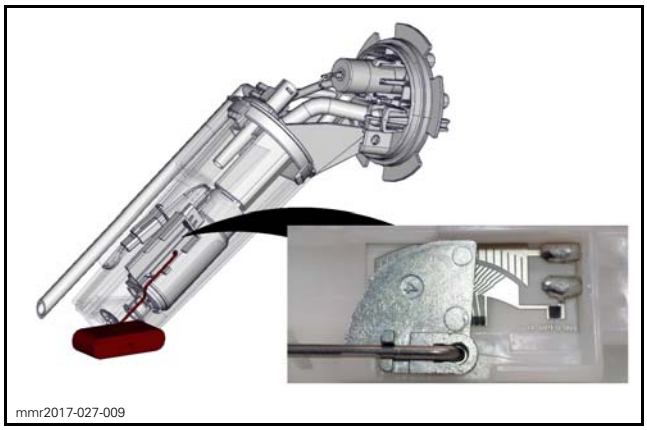

mmr2017-027-009

A float type fuel level sensor varies its resistance with fuel level thus providing a signal to the multifunction gauge for fuel level indication.

# MAINTENANCE

## INSPECTING THE FUEL LINES AND CONNECTIONS

Visually inspect fuel lines and connections for cracks or leaks.

## REPLACING THE IN-LINE FUEL FILTER

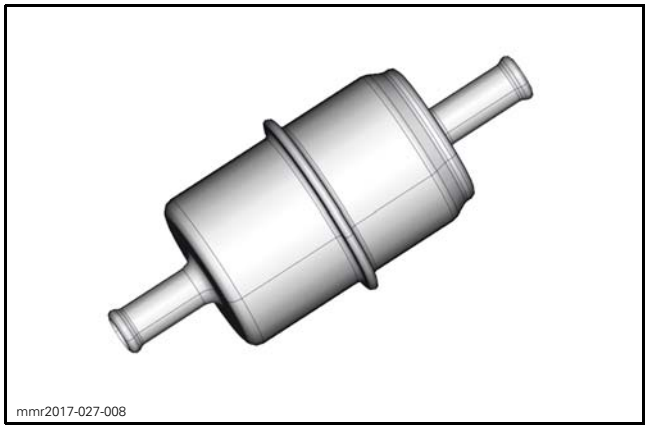
mmr2017-027-008

### Removing the In-line Fuel Filter

**⚠ WARNING**

**Work in a well ventilated area. Wipe up all spilled fuel.**

1. Release fuel pressure in the system. Refer to procedure in this subsection.
2. Remove the upper body module. Refer to *BODY* subsection.
3. Disconnect magneto connector.

**⚠ WARNING**

**The magneto connector must be disconnected to prevent any spark in the engine compartment and to remove power from the fuel pump. Otherwise, if the engine is cranked, fuel vapors may ignite in presence of a spark creating a fire hazard.**

4. Place a rag between fuel filter and oil injection tank.
5. Cut both Oetiker clamps securing the fuel filter.
6. Remove fuel filter from vehicle.

Dispose fuel filter as per your local environmental regulations.

### Installing the In-Line Fuel Filter

The installation is the reverse of the removal procedure. However, pay attention to the following.

Insert new Oetiker clamps on both hoses.

Install the new filter. Make sure printed arrow pointed towards the fuel rail.

Secure the fuel filter with new Oetiker clamps.

| REQUIRED TOOL | |
|---|---|
| OETIKER PLIER<br>(P/N 295 000 070) |  |

**⚠ WARNING**

**Ensure hose clamp is tight and that hose cannot turn on the fitting.**

When installation is complete, carry out a fuel system leak test. Refer to procedure in this subsection.

**⚠ WARNING**

**After working on the fuel system, carry out a fuel system pressurization test to check for leaks. Failure to carry out a fuel system leak test could result in severe injury or a life threatening situation should a leak occur.**

Reinstall all removed parts.

## INSPECTING AND CLEANING THE THROTTLE BODY

Clean throttle plates and throttle body bores.

| SERVICE PRODUCT |
|---|
| CLUTCH AND PULLEY FLANGE CLEANER PRO S1 (P/N 779244) |

# INSPECTION

## TESTING FUEL SYSTEM FOR LEAKS

Activate the fuel pump from the **Functions** page in BUDS2.

Check for fuel leaks.

**⚠ WARNING**

After working on the fuel system, carry out a fuel system pressurization test to check for leaks. Failure to carry out a fuel system pressurization test could result in severe injury or a life threatening situation should a leak occur.

# TESTING FUEL TANK FOR LEAKS

| REQUIRED TOOLS | |
|---|---|
| SMALL HOSE PINCHER (P/N 295 000 076) |  |
| LEAK TEST KIT (P/N 529 033 100) |  |
| VACUUM/PRESSURE PUMP (P/N 529 021 800) |  |

1. Fill up fuel tank.
2. Open the left side panel to access the fuel vent tube.
3. Install a small hose pincher on the vent tube.

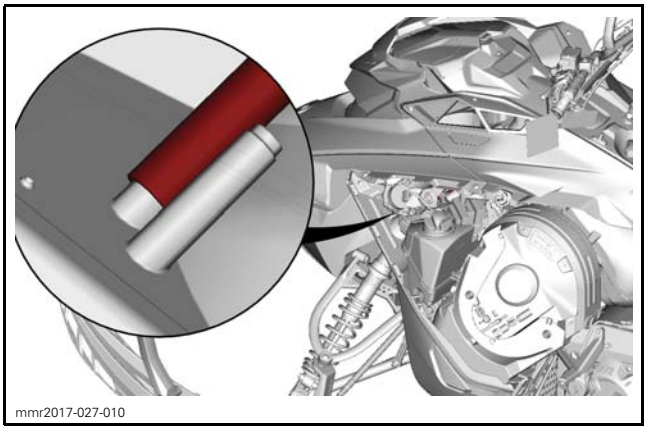

mmr2017-027-010

4. Install the appropriate test cap from the leak test kit on fuel tank inlet.
5. Install the vacuum/pressure pump on pressure test fuel cap.

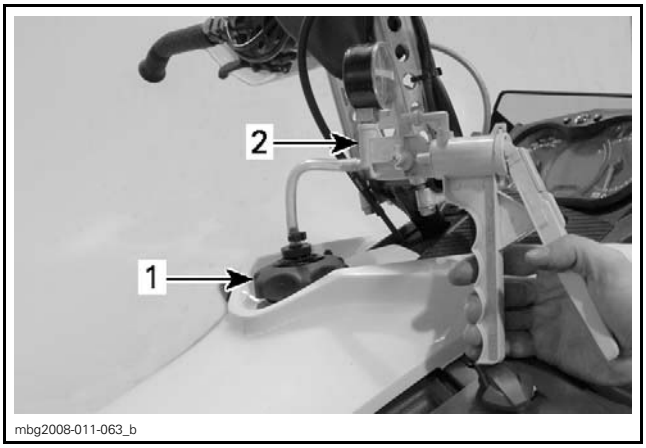


mbg2008-011-063_b

*TYPICAL*
*1. Pressure test fuel cap*
*2. Vacuum/pressure pump*

6. Set pump selector to pressure.
7. Pressurize fuel tank as follows.

| PRESSURE | TIME WITHOUT PRESSURE DROP |
|---|---|
| 21 kPa (3 PSI) | 3 minutes |

If pressure drops, locate fuel leak(s) and repair or replace leaking component(s).

To ease locating leak(s), spray soapy water on components; bubbles will indicate leak location(s).

## Fuel Tank Vent Valve Test

1. While the fuel tank is still pressurized as in the previous test, carry out the following:
2. Place a finger over the vent hose outlet.
3. When removing hose pincher, alternately touch and release vent hose outlet. You should feel pressurized air flowing out indicating the pressure relief valve function is working.
4. Release any remaining pressure in the fuel tank by slowly unscrewing fuel tank cap.
5. Remove the pressure test fuel cap.
6. Remove the fuel tank vent tube from its fitting on the lower left front body panel.
7. Install the vacuum/pressure pump on the vent tube and apply air pressure through the vent valve. Air must flow freely towards the fuel tank neck.

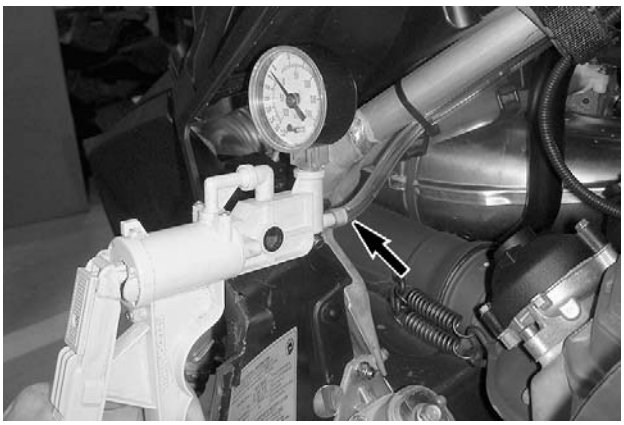
mmr2008-030-002_a

*TYPICAL - VACUUM/PRESSURE PUMP ON VENT TUBE*

NOTE: If fuel vent check valve does not function as indicated in test, replace vent valve.

8. Remove vacuum/pressure pump.
9. Install vent tube on its fitting.
10. Install normal fuel tank cap.

## TESTING FUEL PRESSURE

| REQUIRED TOOLS | |
|---|---|
| PRESSURE GAUGE (P/N 529 036 395) |  |
| T FITTING FUEL PRESSURE (P/N 529 036 509) |  |

Open right hand side panel.

The pressure test provides an indication of the available fuel pressure at the fuel pump outlet. It validates the pressure regulator and the fuel pump.

1. Ensure there is enough gas in fuel tank.
2. Install a rag under the fuel filter to catch fuel spillage.
3. Remove fuel filter.

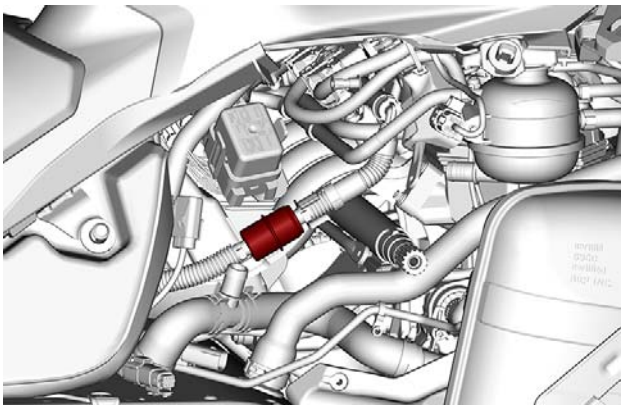
219101015-011-001

4. Install the T fitting tool in place of the fuel filter. Secure with gear clamps.


219101040-012-001

5. Install the pressure gauge on the T fitting tool.

**⚠ WARNING**

**When carrying out pressure test, ensure fuel is not leaking from test equipment onto hot exhaust system or electrical components. Ensure fuel hose do not come into contact with hot engine parts or hot exhaust system.**

6. Start engine.
7. Run engine above 2000 RPM and observe the fuel pressure.

| FUEL PRESSURE |
|---|
| 400 kPa ± 10 kPa (58 PSI ± 1 PSI) |

| FUEL PRESSURE TROUBLESHOOTING | |
|---|---|
| RESULT | POSSIBLE CAUSE |
| Pressure above specifications | Defective fuel regulator |

| FUEL PRESSURE TROUBLESHOOTING | |
|---|---|
| RESULT | POSSIBLE CAUSE |
| Pressure below specifications | Clogged fuel filter |
| | Poor electrical connection |
| | Defective fuel regulator |
| | Defective fuel pump |
| | Leak in the fuel system circuit |

8. Stop engine.

Fuel pressure should remain stable.

9. If fuel pressure drops, check the following for leaks:
   – Tools
   – Hoses
   – Fuel injectors
   – Fuel pressure regulator
   – Fuel pump.
10. Bleed away any remaining fuel in the pressure gauge and fuel hose adapter using the bleed valve on the fuel hose adapter.
11. Remove pressure gauge and T-fitting fuel pressure.
12. Reinstall the fuel filter with **NEW** Oetiker clamps Refer to *FUEL HOSE AND OETIKER CLAMPS* in this subsection..
13. Reinstall all remaining removed parts.

# PROCEDURES

## FUEL HOSE AND OETIKER CLAMPS

### Replacing Fuel Hoses




*TYPICAL PRE-FORMED FUEL HOSE*

When replacing fuel hoses, be sure to use hoses as available from BRP parts department. This will ensure continued proper and safe operation.

**⚠ WARNING**

Use of fuel lines other than those recommended by BRP may compromise fuel system integrity.

**⚠ WARNING**

- Never use a hose pincher on high pressure hoses.
- Never change the routing of a fuel hose.
- Always reinstall the corrugated protective tubing on fuel hoses.
- Secure fuel hoses using the appropriate locking tie or fastener to prevent contact with sharp edges or hot, rotating and moving parts.
- After connecting a hose or a quick connect fitting, pull on the hose near the fitting to make sure it is securely locked.
- Always validate fuel system tightness by performing a *FUEL SYSTEM PRESSURIZATION AND LEAK TEST*.

### Replacing Oetiker Clamps




| REQUIRED TOOL | |
|---|---|
| OETIKER PLIER (P/N 295 000 070) |  |

**⚠ WARNING**

Whenever removing a hose in the fuel system, always use new Oetiker clamps at assembly.

# FUEL TANK

## Removing the Fuel Tank

1. Remove seat.

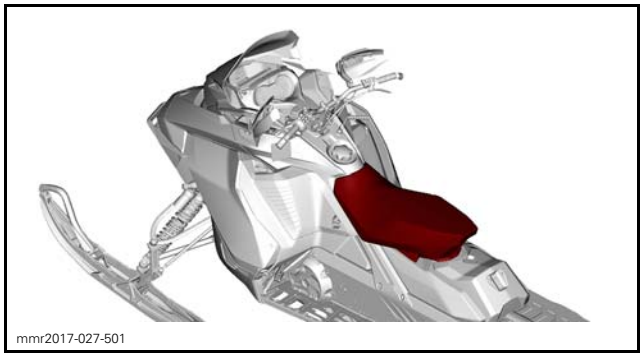
mmr2017-027-501

2. Remove upper body module. Refer to *BODY* subsection.

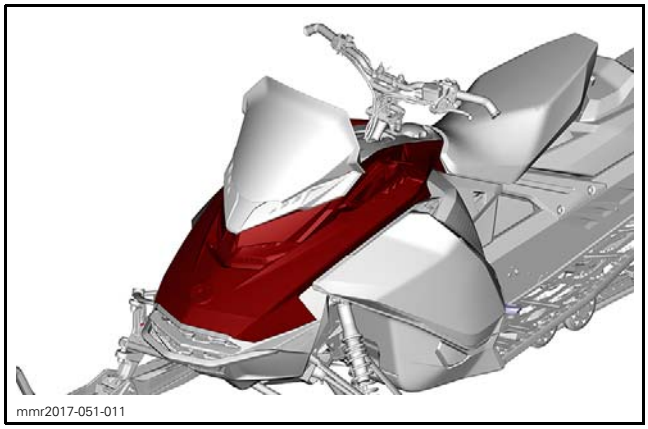
mmr2017-051-011

*TYPICAL*

3. Remove rear console. Refer to *BODY* subsection.

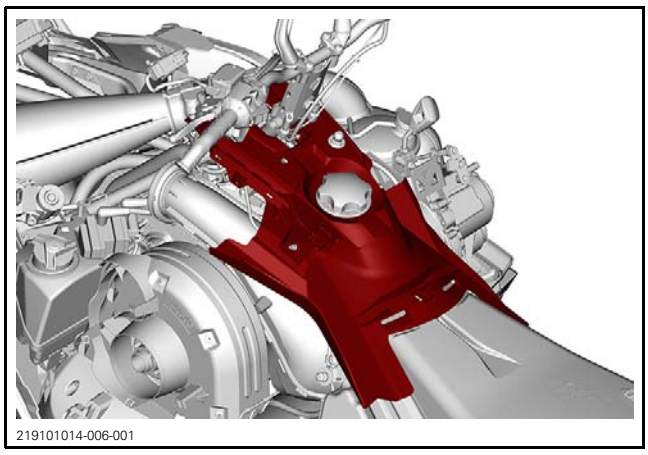
219101014-006-001

4. Remove the battery.

*16 in Track*

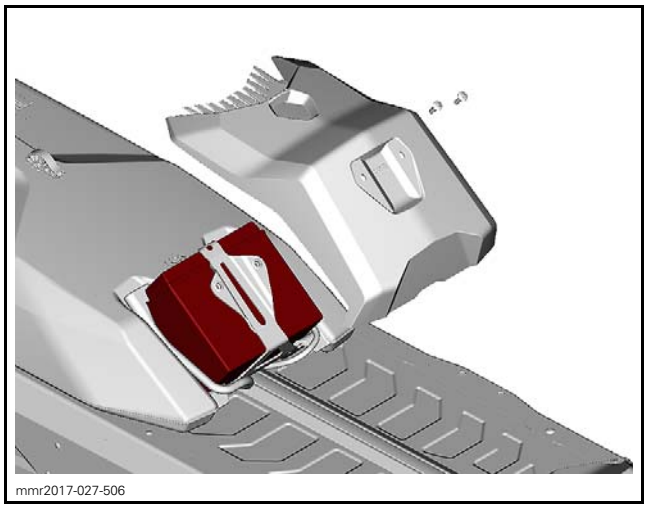
mmr2017-027-506

*20 in Track*

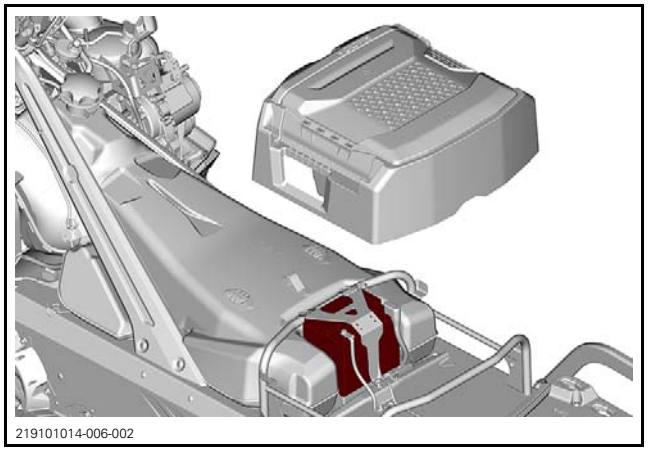
219101014-006-002

*All Models*

5. Remove rear frame members. Refer to *FRAME* subsection.

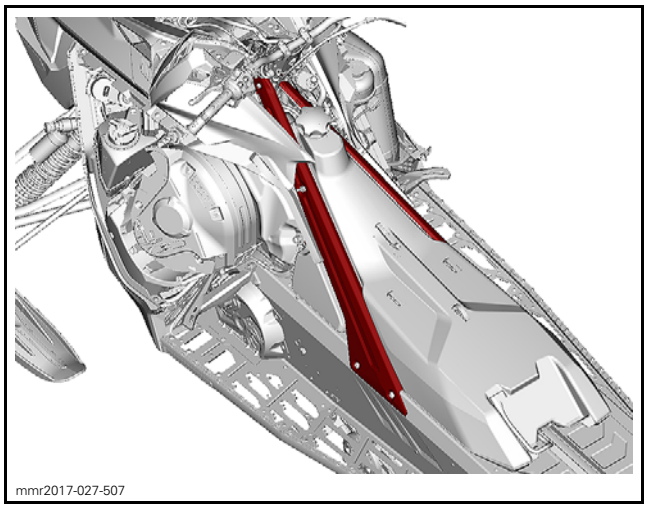
mmr2017-027-507

*16 in Track*

6. Remove and discard fuel tank retaining screws.

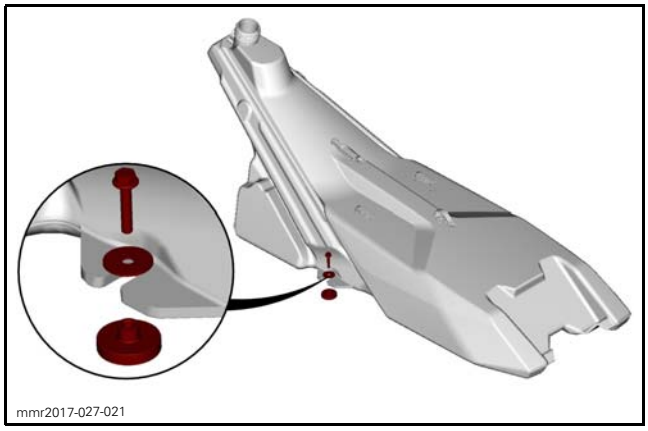
mmr2017-027-021

*All Models*

7. Disconnect fuel tank vent.

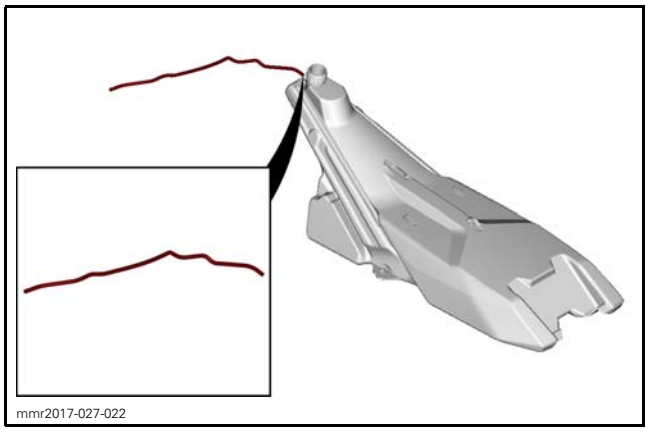
mmr2017-027-022

8. Remove fuel pump electrical connector.

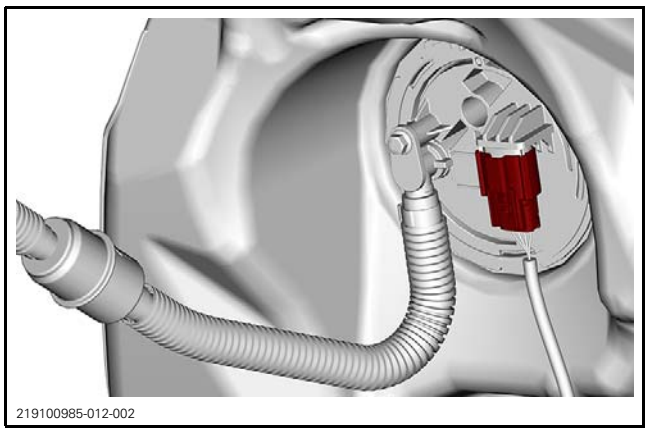
219100985-012-002

9. Disconnect fuel hose from fuel rail.
10. Remove fuel tank.

## Installing the Fuel Tank

The installation is the reverse of the removal procedure. However, pay attention to the following.

Refer to appropriate subsections to properly reinstall all removed components.

Pressurize and test fuel system for leaks.

# FUEL PUMP

## Relieving Fuel Pressure

1. Connect vehicle to BUDS2, refer to the *COMMUNICATION TOOLS* subsection.
2. From the **Functions** page, relieve fuel pressure.

## Activating the Fuel Pump with BUDS2

NOTE: Activating the fuel pump as described in this procedure can be used for purging air from the fuel system whenever a fuel hose has been disconnected and reconnected. The pump should be activated for 15 seconds to ensure proper purging of the system.

1. Connect vehicle to BUDS2 software, refer to *COMMUNICATION TOOLS* subsection.
2. From the **Functions** page, activate the fuel pump.
3. Listen for fuel pump operation.

If you do not hear the pump come ON, select the **Faults** tab in BUDS2 and check for fault codes.

If there is no fault code, connect a known good fuel pump to the vehicle harness (in parallel) and repeat the test.

NOTE: No voltage test can be done when the fuel pump is disconnected.

If the second fuel pump functions when connected to the vehicle harness, then replace the fuel pump installed in the vehicle.

## Removing the Fuel Pump

1. Remove the fuel tank.
2. Remove fuel pump assembly snap ring from fuel tank.


mmr2017-027-026

3. Remove and discard fuel pump gasket.

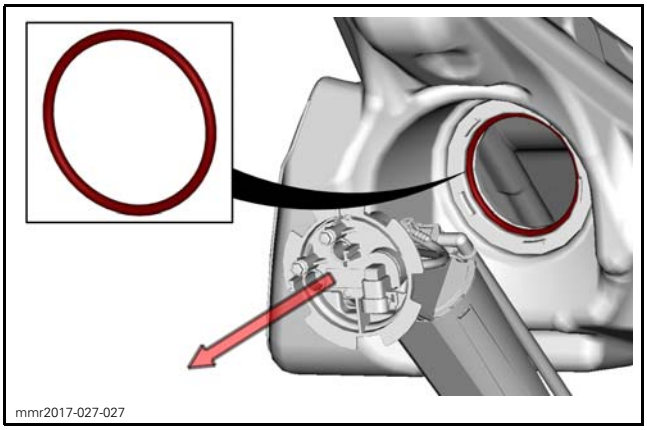
mmr2017-027-027

4. Visually inspect for broken or damaged ground wires, if any issue are found, the module should be replaced.

## Installing the Fuel Pump

The installation is the reverse of the removal procedure. However, pay attention to the following.

Make sure the remote pick-up is inserted all the way to the rear of fuel tank and does not interfere with the fuel level sensor float.

Install a NEW gasket on the fuel pump prior to installing the pump in the tank.

Ensure the fuel pump snap ring is fully engaged with the gap on top. Refer to image in removal procedure.

NOTE: The gasket must be installed on the fuel tank side so it is located between the pump and the fuel tank.

Install fuel tank.

**⚠ WARNING**

**After working on the fuel system, carry out a fuel system pressurization test to check for leaks. Failure to carry out a fuel system leak test could result in severe injury or a life threatening situation should a leak occur.**

# FUEL PUMP INLET FILTER

## Replacing the Fuel Pump Inlet Filter

1. Remove fuel pump assembly from fuel tank. Refer to procedure in this subsection.
2. Free the wires of the fuel level sensor of the fuel pump reservoir.

***NOTICE*** **Do not pull / push on wires or metal terminals that connect the grounding wires to the plastic parts. Keep hands and tools away from this area.**

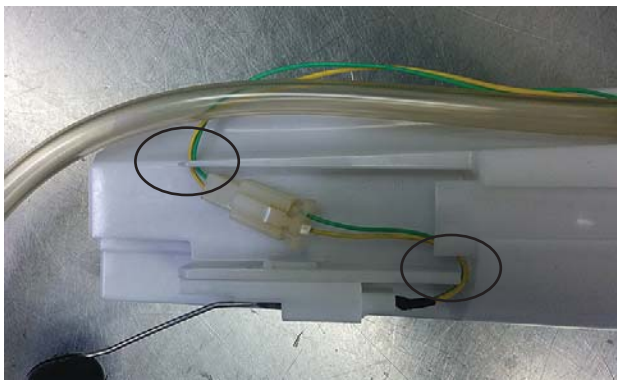
mmr2017-027-300_a

3. Unlock fuel pump reservoir by carefully inserting a small screwdriver between the tab and the fuel pump reservoir.

***NOTICE*** **Do not push directly on tabs or twist the screwdriver.**

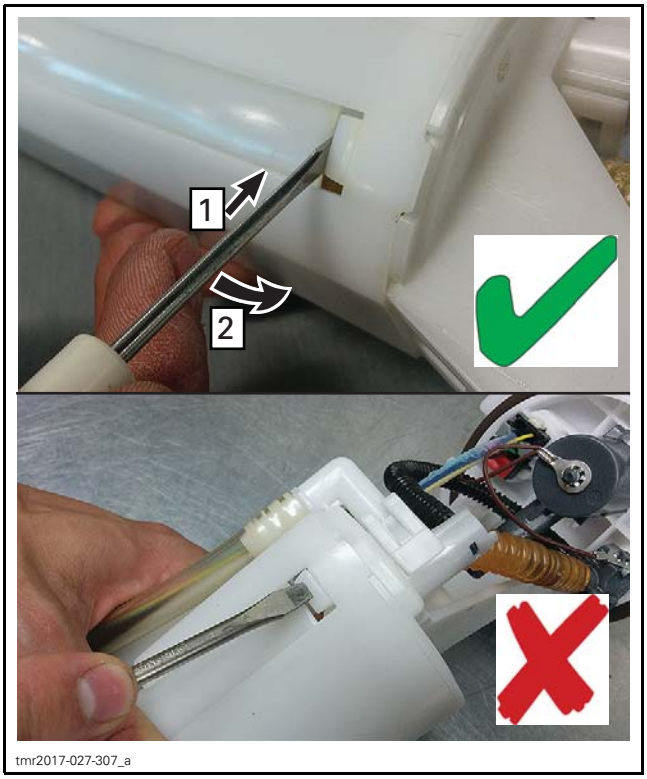

tmr2017-027-307_a

4. Completely remove fuel pump reservoir by pulling it carefully.

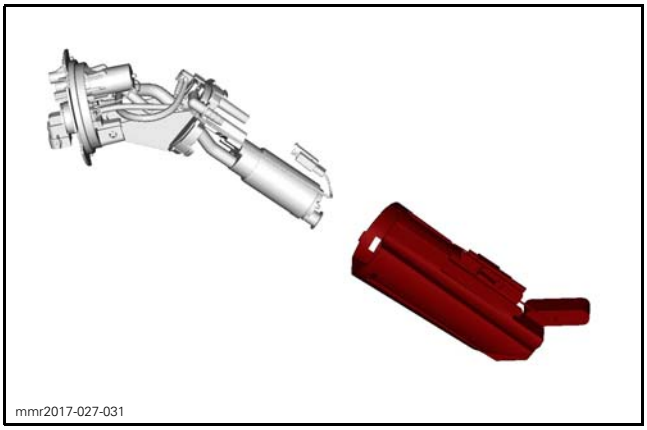
mmr2017-027-031

**NOTICE** To avoid damaging wires, Pull the reservoir carefully and do not let reservoir hang by wires.

5. Remove inlet fuel pump filter by pulling on it. If the filter is hard to remove, pry the filter gently using a small screwdriver.

**NOTICE** Be careful to avoid scratching the outside diameter of the pump inlet fitting where the filter fits.


mmr2017-027-302_a

6. Discard inlet fuel pump filter and steel ring.
7. Install new fuel pump inlet filter.
   - 7.1 Insert inlet filter onto fuel pump by pressing it downward.
   - 7.2 Push the filter on until the fitting bottoms out on the pump inlet face, there should be no gap.

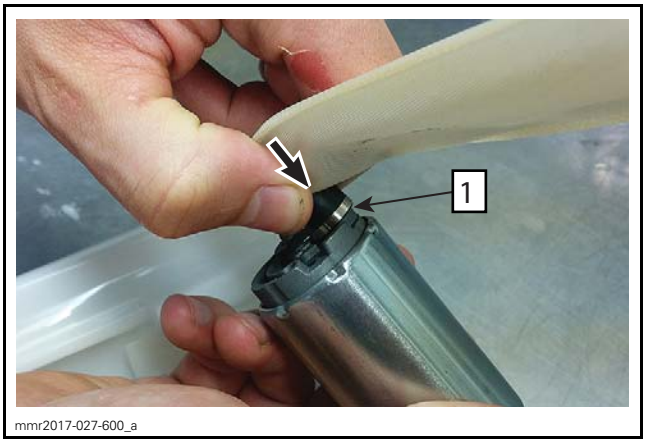

mmr2017-027-600_a

*1. No gap here*

   - 7.3 Ensure that the filter hole is properly positioned into the pin.

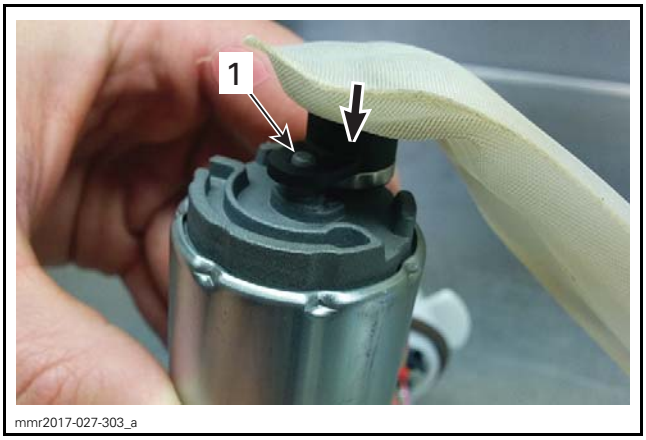

mmr2017-027-303_a

*1. Pin*

8. Install fuel pump reservoir carefully and ensure that all parts are properly positioned.

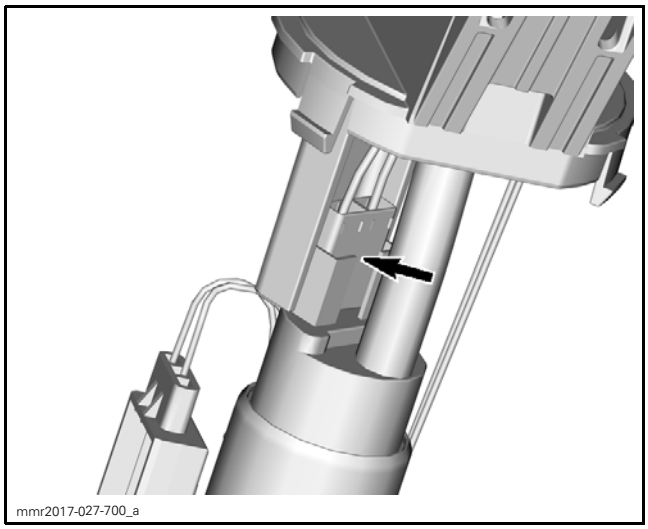


*ELECTRICAL CONNECTOR MUST BE IN THIS POSITION*

NOTE: Make sure the pump motor is positioned between the molded ribs in the reservoir.

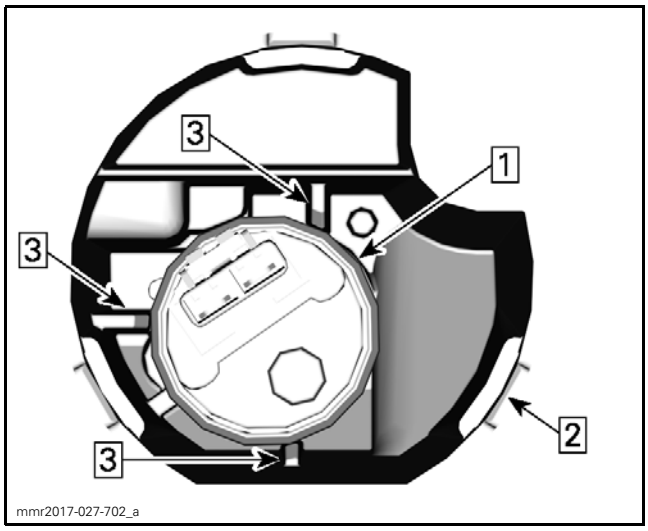


1. *Fuel pump motor*
2. *Reservoir*
3. *Ribs*

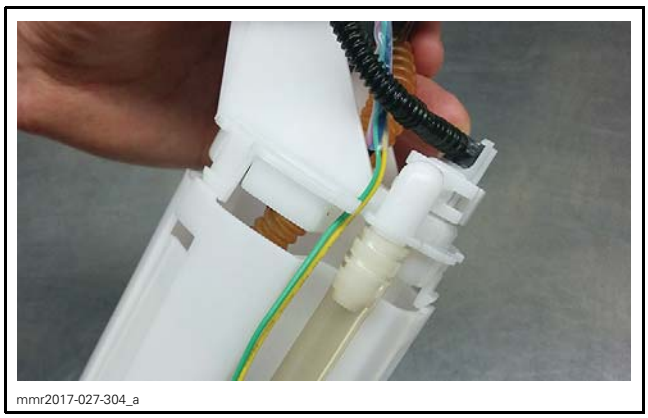


9. Ensure that fuel tank reservoir tabs are properly locked.
10. Route the fuel level sensor wires properly.

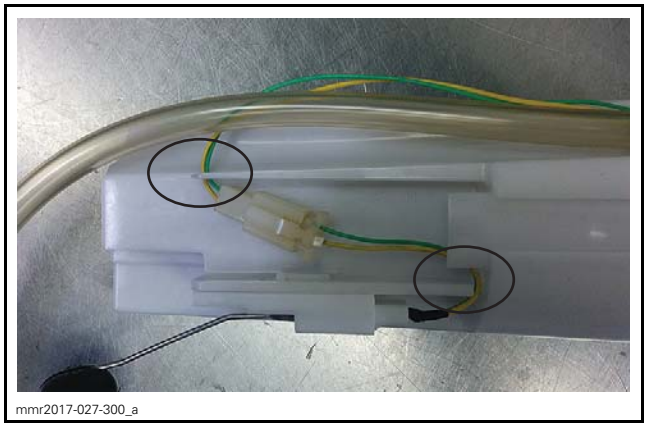


11. Reinstall fuel pump in fuel tank. Refer to procedure in this subsection.

# FUEL LEVEL SENSOR

NOTE: Verify the gauge functions related to the fuel level sensor before testing the sensor. Refer to *GAUGE* subsection.

## Testing Fuel Level Sensor Resistance

1. Remove fuel pump from fuel tank, refer to *FUEL PUMP* in this subsection.
2. Ensure the fuel level sensor is properly connected in the fuel pump module.
3. Measure the resistance at the fuel pump connector (FP).

| FUEL LEVEL SENSOR BENCH TEST | | |
|---|---|---|
| PROBE | FLOAT POSITION | RESISTANCE |
| FP- B to FP-D | Empty | 95 Ω ± 5 Ω |
| | Full | 9 Ω ± 2 Ω |

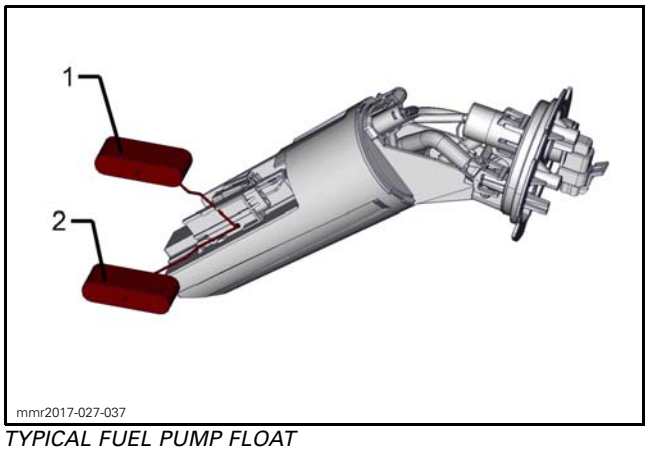


*TYPICAL FUEL PUMP FLOAT*
*1. Full position*
*2. Empty position*

4. When fuel level sensor travels from full to empty or vice-versa, there should be a constant linearity to the resistance readings. Any spike or drop of resistance indicates a "flat spot" in the fuel level sensor circuitry.

If fuel level sensor fails bench test, replace the fuel level sensor.

## Replacing the Fuel Level Sensor

1. Remove the fuel pump.

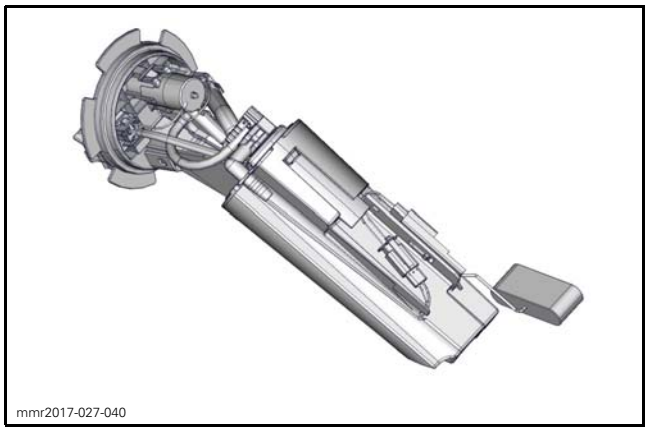


2. Disconnect fuel level sensor connector.

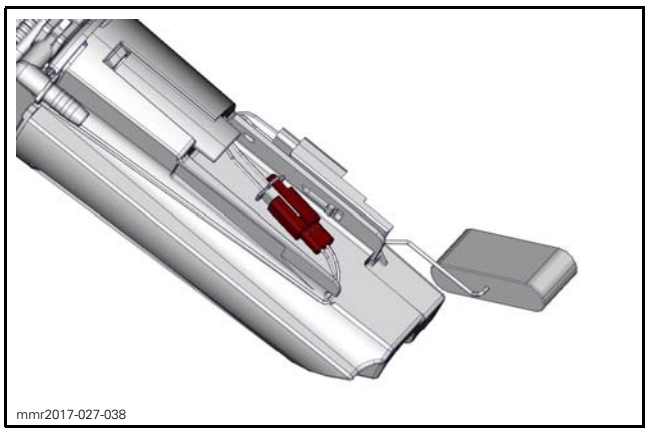


3. Slide the potentiometer out of the fuel pump reservoir.

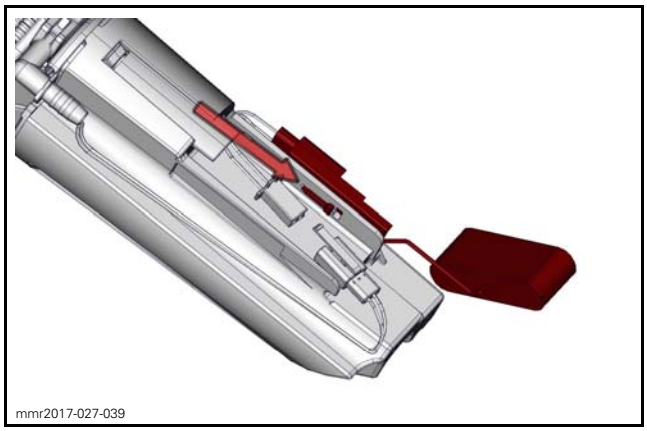


4. Remove fuel level sensor.
5. Replace the fuel level sensor with a new one and reverse steps.

# FUEL TANK AND FUEL PUMP (E-TEC)

## SERVICE TOOLS

| Description | Part Number | Page |
|---|---|---|
| LEAK TEST KIT | 529 033 100 | 173 |
| OETIKER PLIER | 295 000 070 | 176 |
| PRESSURE GAUGE | 529 036 395 | 174 |
| SMALL HOSE PINCHER | 295 000 076 | 173 |
| T FITTING FUEL PRESSURE | 529 036 509 | 174 |
| VACUUM/PRESSURE PUMP | 529 021 800 | 173 |

*16 in Track*

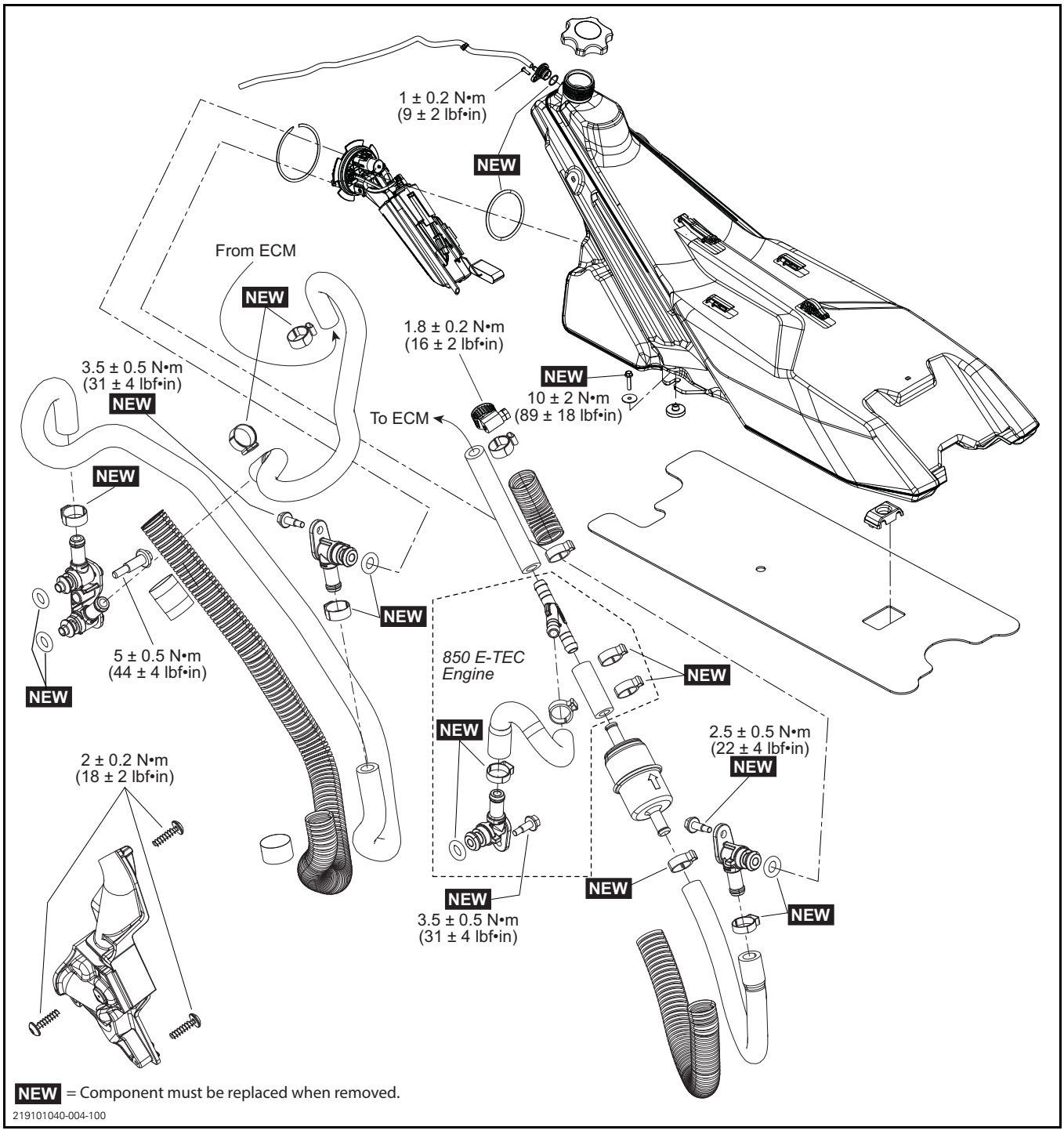
1 ± 0.2 N•m
(9 ± 2 lbf•in)
NEW
From ECM
NEW
1.8 ± 0.2 N•m
(16 ± 2 lbf•in)
3.5 ± 0.5 N•m
(31 ± 4 lbf•in)
NEW
NEW
10 ± 2 N•m
(89 ± 18 lbf•in)
To ECM
NEW
NEW
5 ± 0.5 N•m
(44 ± 4 lbf•in)
NEW
850 E-TEC
Engine
NEW
NEW
2.5 ± 0.5 N•m
(22 ± 4 lbf•in)
NEW
2 ± 0.2 N•m
(18 ± 2 lbf•in)
NEW
NEW
NEW
3.5 ± 0.5 N•m
(31 ± 4 lbf•in)
NEW = Component must be replaced when removed.
219101040-004-100

*20 and 24 in Track*

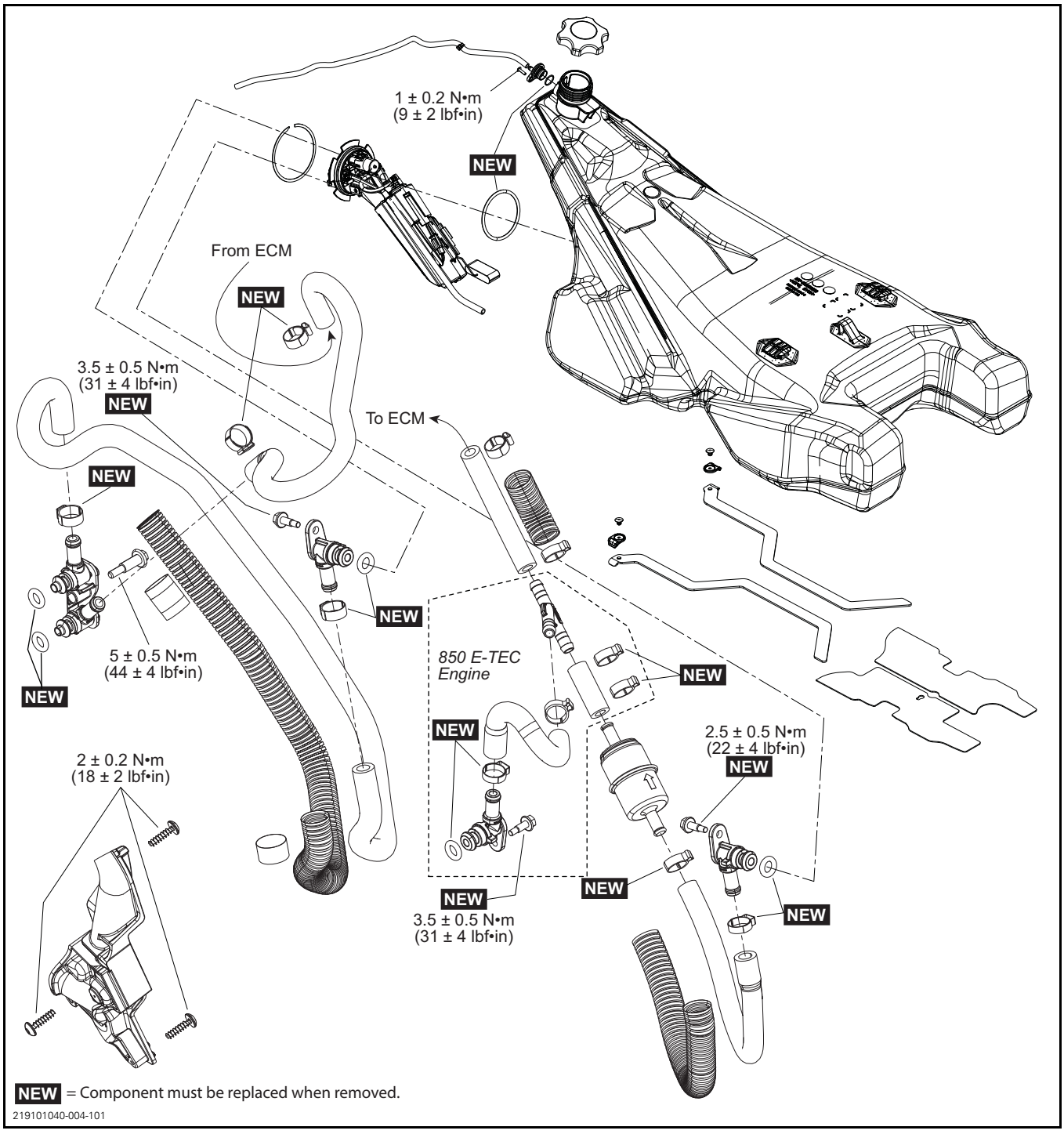

# GENERAL

NOTE: It is a good practice to check for fault codes using the BRP diagnostic software BUDS2 as a first troubleshooting step. Refer to *DIAGNOSTIC AND FAULT CODES*.

**⚠ WARNING**

Always disconnect the magneto connector prior to:
– Disconnecting any fuel hose.
– Removing a fuel injector.
– Removing a spark plug cable or spark plug.
Otherwise, if the engine is cranked, fuel vapors may ignite in presence of a spark creating a fire hazard.

When disconnecting a fuel line, cover the connection with an absorbent shop rag and proceed slowly to minimize spilling.

**⚠ WARNING**

Do not allow fuel to spill on hot engine parts and/or on electrical connectors. Wipe off any fuel spillage in the engine compartment. Fuel is flammable and explosive under certain conditions.

**⚠ WARNING**

After working on the fuel system, always carry out a fuel system pressurization test to check for leaks.

**⚠ WARNING**

Never remove the eyelet connectors from the fuel pressure regulator and the fuel hose connector. A bad connection may create a static electricity discharge causing a fire hazard.

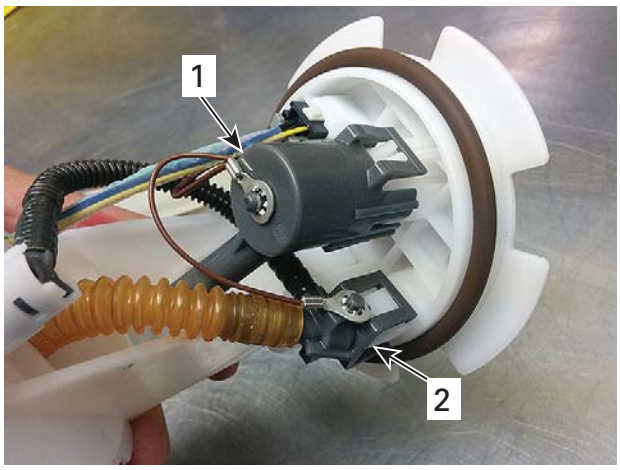


*1. Fuel pressure regulator*
*2. Fuel hose connector*

# SYSTEM DESCRIPTION

## Electric Fuel Pump

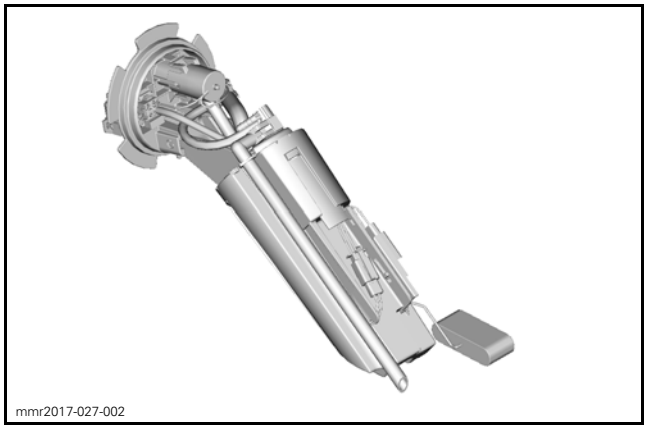


An electric fuel pump is mounted in the front center portion of the fuel tank.

A 12 Vdc high pressure fuel pump with an integrated jet pump is used.

NOTE: Although the fuel pump is connected to the 55 Vdc system, the ECM modulates the voltage (Pulse Width Modulation) between 9 and 16 Vdc depending on the engine RPM. The fuel pump output will change as voltage changes.

As soon as the engine is cranking, the electric fuel pump turns on in preparation for the engine start. When the engine runs, the fuel pump is ON continuously to provide a constant fuel pressure to the injectors.

To ensure a constant delivery of fuel to the engine for all riding conditions when the fuel level is low, a rear pickup and a fuel pump reservoir is used.

The fuel pump reservoir is actually the housing of the fuel pump module in which the fuel pump is located. A check valve at the bottom of the housing allows the fuel in the tank to enter the fuel pump reservoir.

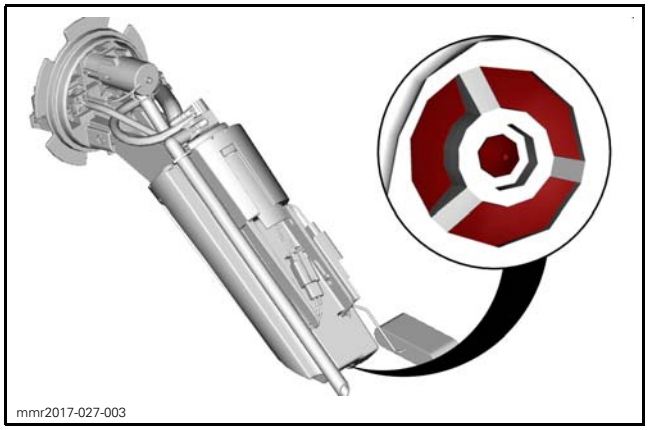


When the fuel pump runs, it draws the fuel from the fuel pump reservoir and feeds it to the injection system. This causes fuel in the tank to enter the fuel pump reservoir, by gravity, through its bottom inlet check valve.

At the same time, a portion of the fuel flow from the electric fuel pump flows through a jet pump that contains a venturi.

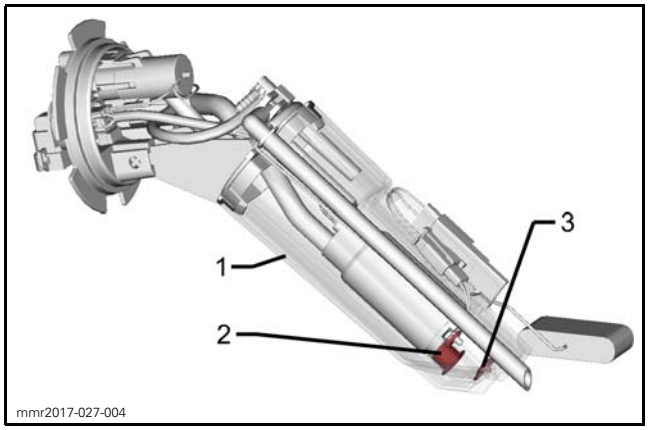


*TYPICAL - VIEW INSIDE FUEL PUMP RESERVOIR*
1. *Fuel pump reservoir*
2. *Bottom inlet*
3. *Check valve (open upwards)*

As the fuel accelerates through the venturi, it generates a low pressure area at a connection to the remote pickup, which draws fuel into the fuel pump reservoir from the remote pickup.

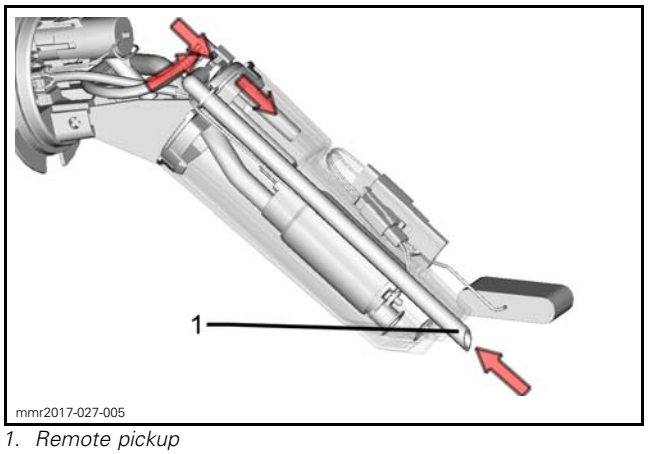


1. *Remote pickup*

When riding the vehicle on a level surface, fuel enters into the fuel pump reservoir through its check valve and through the remote pickup simultaneously, as long as there is enough fuel in the tank to cover the remote pickup.

When riding downhill with a low amount of fuel in the tank, the fuel moves towards the front of fuel tank. The fuel enters the fuel pump reservoir through the check valve only as there is no fuel at the remote pickup.

When riding uphill with a low amount of fuel in the tank, the fuel moves towards the rear of the fuel tank. The check valve closes and traps the fuel in the pump reservoir. The fuel pump continues to draw fuel from the fuel pump reservoir, which is now only fed by the jet pump using the remote pickup. This prevents air from being drawn into the fuel lines from the fuel tank.

The continuous fuel flow cools down the fuel pump, the injectors and the ECM. To cool these components, the fuel circulates as follows:
- Out of fuel pump
- Through the ECM
- To the direct injectors (around the voice coils)
- Through the pressure regulator
- Back to fuel tank.

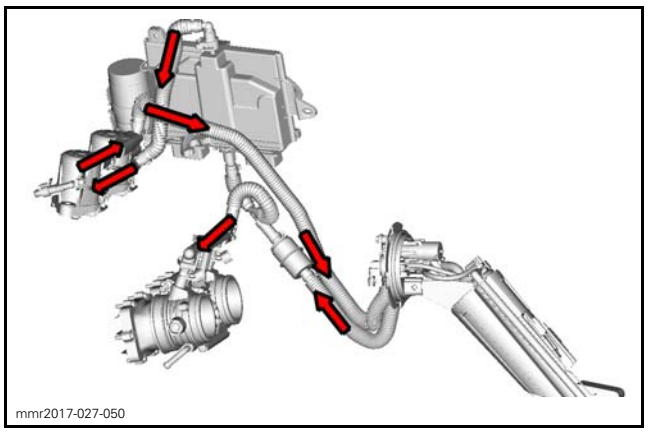

## Fuel Pickup

Fuel enters the fuel pump reservoir from either a check valve at the bottom of the fuel pump reservoir, or from a remote pickup in the rear portion of the fuel tank.

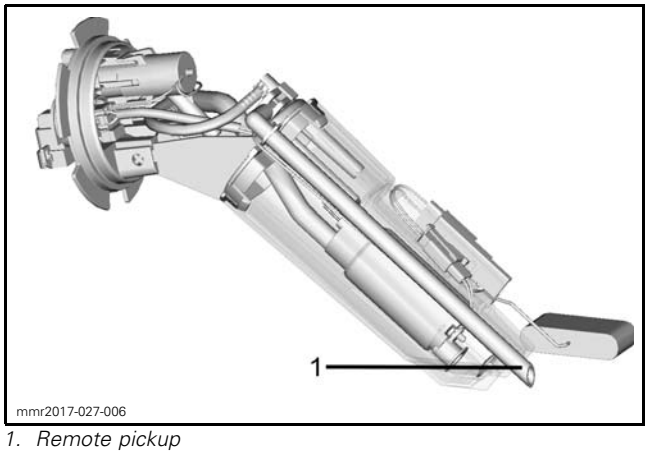


*1. Remote pickup*

## Fuel Pressure Regulator

An integrated fuel pressure regulator is mounted on the fuel pump flange. It is basically a spring loaded valve that opens and closes the path of fuel returning to the tank, thus maintaining a constant fuel pressure in the system.

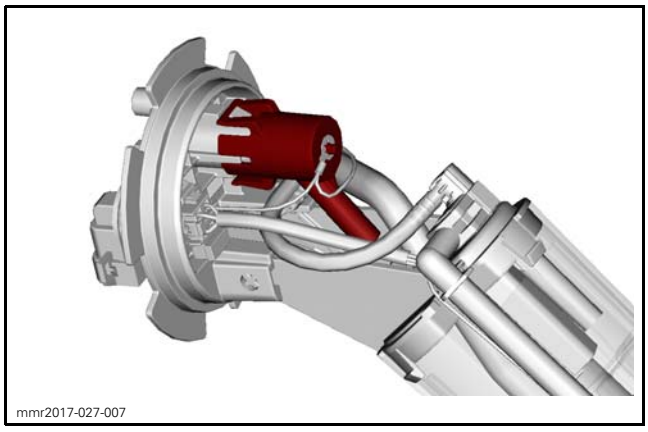


| FUEL PRESSURE |
| --- |
| Approximately 303 kPa (44 PSI) at 2000 RPM (will be lower at idle) |

Fuel pressure should drop less than 35 kPa (5 PSI) when engine stops running.

If a leak is present, pressure will continue to drop within the first minute after engine stops running.

## Fuel Tank Vent

The fuel tank is vented through a combination type check valve that allows ambient air pressure to enter fuel tank at all times.

As fuel is consumed by the engine, a negative pressure would occur in the fuel tank. This could eventually prevent the fuel pump from drawing enough fuel. The **negative pressure relieve function** of the valve allows the higher outside air pressure in.

If pressure builds up and exceeds 2.0 kPa to 4.8 kPa (.3 PSI to .7 PSI) in the fuel tank, the check valve opens and lets the excess pressure vent out of the tank.

## Fuel Filters

### Fuel Pump Pre-Filter

A fuel pump pre-filter is used at the electric fuel pump inlet. It is a replaceable nylon mesh filter located within the fuel pump module housing (fuel pump reservoir).




The fuel pump pre-filter protects the fuel pump and prevents clogging of the fuel passages within the fuel pump module.

### In-Line Fuel Filter

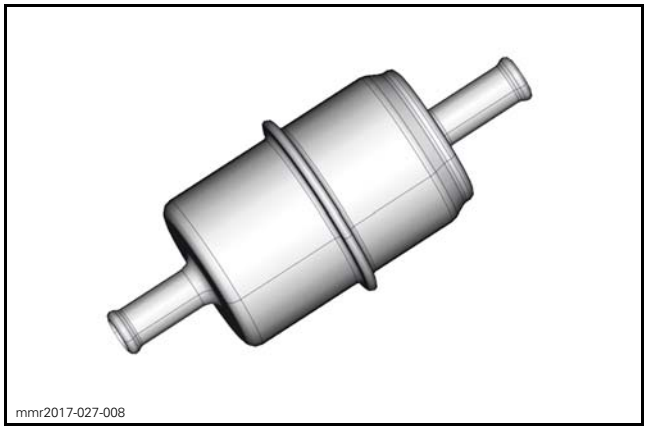


An in-line filter on the supply side is located between the fuel pump and the ECM.

It is a replaceable metallic canister type filter used to deliver dirt-free fuel to the injectors.

### Fuel Level Indication

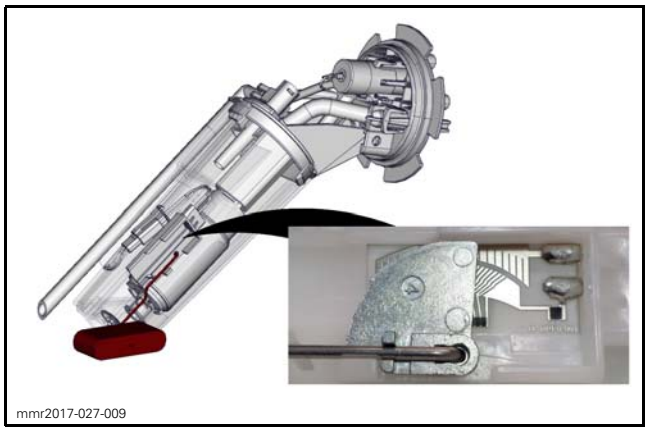
mmr2017-027-009

A float type fuel level sensor varies its resistance with fuel level thus providing a signal to the multifunction gauge for fuel level indication.

# INSPECTION

## INSPECTING THE FUEL LINES AND CONNECTIONS

Visually inspect fuel lines and connections for cracks or leaks.

## TESTING FUEL SYSTEM FOR LEAKS

Activate the fuel pump from the **Functions** page in BUDS2.

Check for fuel leaks.

**⚠ WARNING**

**After working on the fuel system, carry out a fuel system pressurization test to check for leaks. Failure to carry out a fuel system pressurization test could result in severe injury or a life threatening situation should a leak occur.**

## TESTING FUEL TANK FOR LEAKS

| REQUIRED TOOLS | |
|---|---|
| SMALL HOSE PINCHER (P/N 295 000 076) |  |
| LEAK TEST KIT (P/N 529 033 100) |  |
| VACUUM/PRESSURE PUMP (P/N 529 021 800) |  |

1. Fill up fuel tank.
2. Open the left side panel to access the fuel vent tube.
3. Install a hose pincher on the vent tube.

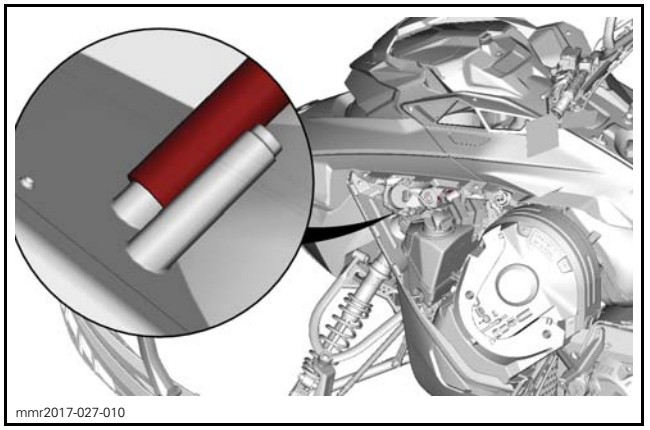
mmr2017-027-010

4. Install the appropriate test cap from the leak test kit on fuel tank inlet.
5. Install the pressure pump on pressure test fuel cap.

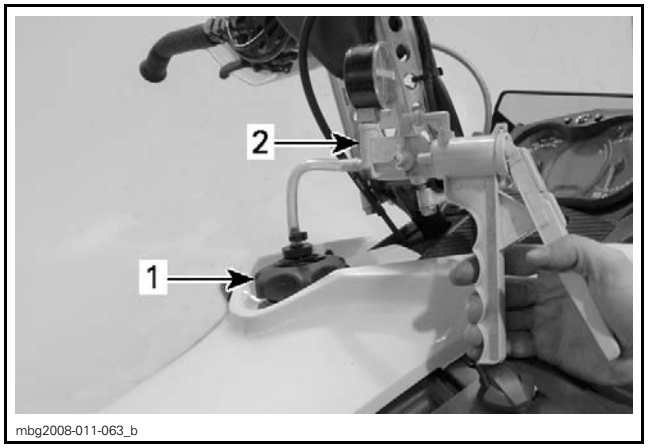

mbg2008-011-063_b

*TYPICAL*
*1. Pressure test fuel cap*
*2. Vacuum/pressure pump*

6. Set pump selector to pressure.
7. Pressurize fuel tank as follows.

| PRESSURE | TIME WITHOUT PRESSURE DROP |
|---|---|
| 21 kPa (3 PSI) | 3 minutes |

If pressure drops, locate fuel leak(s) and repair or replace leaking component(s).

To ease locating leak(s), spray soapy water on components; bubbles will indicate leak location(s).

## Fuel Tank Vent Valve Test

1. While the fuel tank is still pressurized as in the previous test, carry out the following:
2. Place a finger over the vent hose outlet.
3. When removing hose pincher, alternately touch and release vent hose outlet. You should feel pressurized air flowing out indicating the pressure relief valve function is working.
4. Release any remaining pressure in the fuel tank by slowly unscrewing fuel tank cap.
5. Remove the pressure test fuel cap.
6. Remove the fuel tank vent tube from its fitting on the lower left front body panel.
7. Install the pressure pump on the vent tube and apply air pressure through the vent valve. Air must flow freely towards the fuel tank neck.

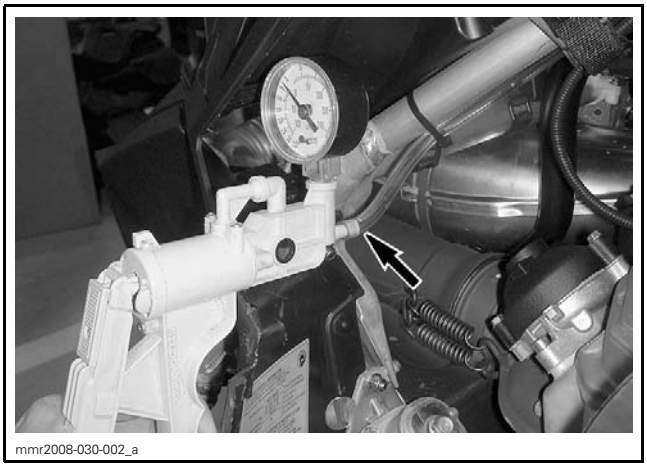
mmr2008-030-002_a

*TYPICAL - VACUUM/PRESSURE PUMP ON VENT TUBE*

NOTE: If fuel vent check valve does not function as indicated in test, replace vent valve.

8. Remove vacuum/pressure pump.
9. Install vent tube on its fitting.
10. Install normal fuel tank cap.

# TESTING THE FUEL PRESSURE

| REQUIRED TOOLS | |
|---|---|
| PRESSURE GAUGE (P/N 529 036 395) |  |
| T FITTING FUEL PRESSURE (P/N 529 036 509) |  |

Open right hand side panel.

Move rewind starter handle assembly (applicable models).

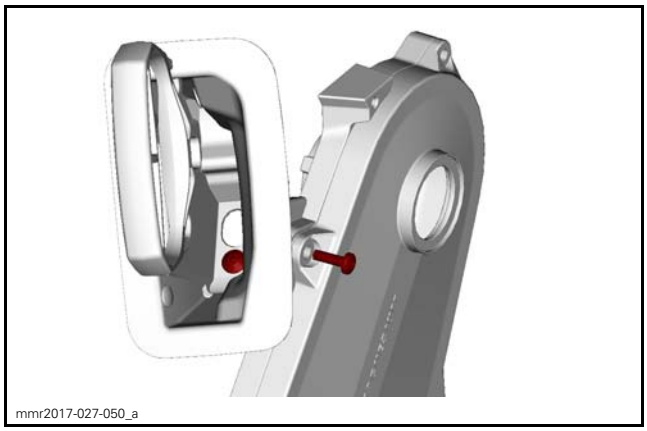
mmr2017-027-050_a

The pressure test provides an indication of the available fuel pressure at the fuel pump outlet. It validates the pressure regulator and the fuel pump.

1. Ensure there is enough gas in fuel tank.
2. Install a rag under the fuel filter to catch the fuel spillage.
3. Remove the fuel filter.

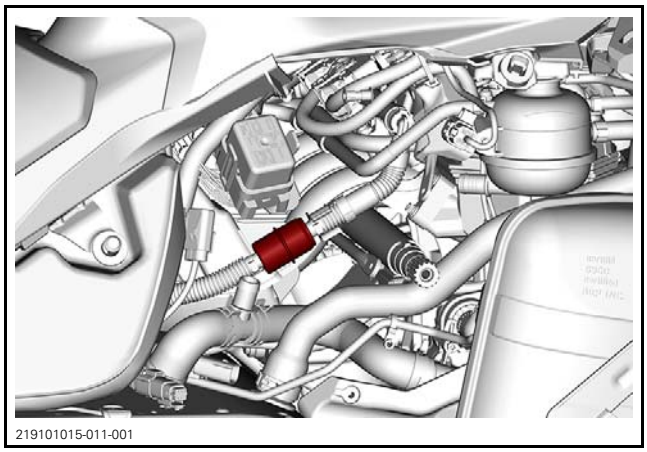
219101015-011-001

4. Install the T fitting tool in place of the fuel filter. Secure with gear clamps.


219101040-012-001

5. Install the pressure gauge on the T fitting tool.

**⚠ WARNING**

**When carrying out pressure test, ensure fuel is not leaking from test equipment onto hot exhaust system or electrical components. Ensure fuel hose do not come into contact with hot engine parts or hot exhaust system.**

6. Start engine.
7. Run engine above 2000 RPM and observe the fuel pressure.

| FUEL PRESSURE |
|---|
| 303 kPa (44 PSI) |

If pressure is lower than specified, momentarily block the return hose while monitoring the pressure gauge.

***NOTICE*** **Do not block the fuel return for more than 2 seconds.**

If pressure rises to reach or exceed specification with the fuel return blocked, replace fuel regulator.

If pressure does not rise with the fuel return blocked, refer to *PRESSURE BELOW SPECIFICATIONS* in the following table.

| FUEL PRESSURE TROUBLESHOOTING | |
|---|---|
| RESULT | POSSIBLE CAUSE |
| Pressure above specifications | Defective fuel regulator |

| FUEL PRESSURE TROUBLESHOOTING | |
|---|---|
| RESULT | POSSIBLE CAUSE |
| Pressure below specifications | Clogged fuel filter |
| | Poor electrical connection |
| | Defective fuel regulator |
| | Defective fuel pump |
| | Leak in the fuel system circuit |

8. Stop engine.

Fuel pressure should remain stable.

9. If fuel pressure drops, check the following for leaks:
   - Tools
   - Hoses
   - Fuel injectors
   - Fuel pressure regulator
   - Fuel pump.
10. Bleed away any remaining fuel in the pressure gauge and fuel hose adapter using the bleed valve on the fuel hose adapter.
11. Remove pressure gauge and fuel hose adapter.
12. Reinstall the fuel pressure hose on ECM . Refer to *REPLACING THE ECM LOWER FUEL HOSE*
13. Reinstall all remaining removed parts.

# PROCEDURES

## FUEL HOSE AND OETIKER CLAMPS

### Replacing Fuel Hoses


mmr2017-027-013

*TYPICAL PRE-FORMED FUEL HOSE*

When replacing fuel hoses, be sure to use hoses as available from BRP parts department. This will ensure continued proper and safe operation.

**⚠ WARNING**

Use of fuel lines other than those recommended by BRP may compromise fuel system integrity.

**⚠ WARNING**

- Never use a hose pincher on high pressure hoses.
- Never change the routing of a fuel hose.
- Always reinstall the corrugated protective tubing on fuel hoses.
- Secure fuel hoses using the appropriate locking tie or fastener to prevent contact with sharp edges or hot, rotating and moving parts.
- After connecting a hose or a quick connect fitting, pull on the hose near the fitting to make sure it is securely locked.
- Always validate fuel system tightness by performing a *FUEL SYSTEM PRESSURIZATION AND LEAK TEST*.

## Replacing Oetiker Clamps



mmr2017-027-012

| REQUIRED TOOL | |
|---|---|
| OETIKER PLIER<br>(P/N 295 000 070) |  |

**⚠ WARNING**

Whenever removing a hose in the fuel system, always use new Oetiker clamps at assembly.

# REPLACING THE IN-LINE FUEL FILTER

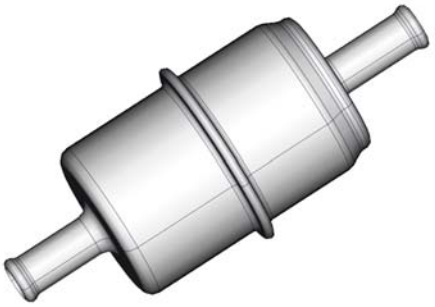

mmr2017-027-008

## Removing the In-line Fuel Filter

**⚠ WARNING**

Work in a well ventilated area. Wipe up all spilled fuel.

1. Release fuel pressure in the system. .
2. Remove the upper body module. Refer to *BODY* subsection.
3. Disconnect magneto connector.

**⚠ WARNING**

The magneto connector must be disconnected to prevent any spark in the engine compartment and to remove power from the fuel pump. Otherwise, if the engine is cranked, fuel vapors may ignite in presence of a spark creating a fire hazard.

4. Place a rag between fuel filter and oil injection tank.
5. Cut both Oetiker clamps securing the fuel filter.
6. Remove fuel filter from vehicle.

Dispose fuel filter as per your local environmental regulations.

## Installing the In-Line Fuel Filter

The installation is the reverse of the removal procedure however, pay attention to the following.

Insert new Oetiker clamps on both hoses.

Install the new filter. Make sure printed arrow pointed towards the ECM.

Secure the fuel filter with Oetiker clamps.

**⚠ WARNING**

Ensure hose clamp is tight and that hose cannot turn on the fitting.

When installation is complete, carry out a fuel system leak test, refer to *TESTING FUEL SYSTEM FOR LEAKS* in this subsection.

**⚠ WARNING**

After working on the fuel system, carry out a fuel system pressurization test to check for leaks. Failure to carry out a fuel system leak test could result in severe injury or a life threatening situation should a leak occur.

Reinstall all removed parts.

# FUEL TANK

## Removing the Fuel Tank

1. Remove seat.

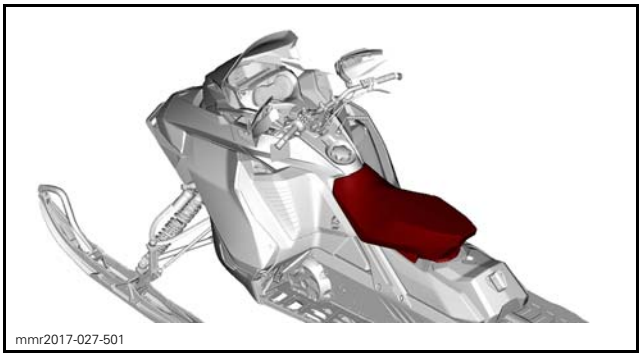
mmr2017-027-501

2. Remove upper body module. Refer to *BODY* subsection.

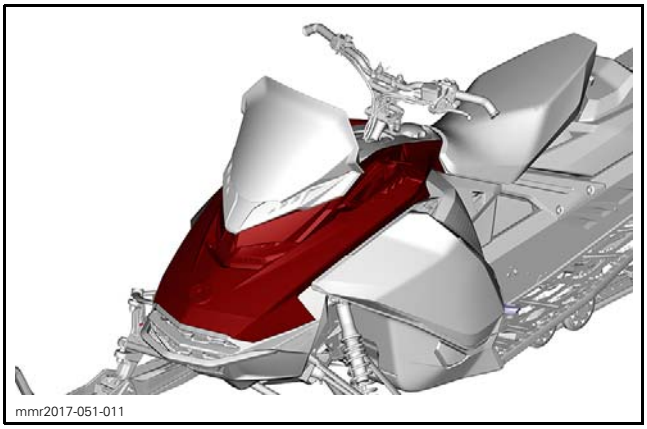
mmr2017-051-011

*TYPICAL*

3. Remove tank cover.

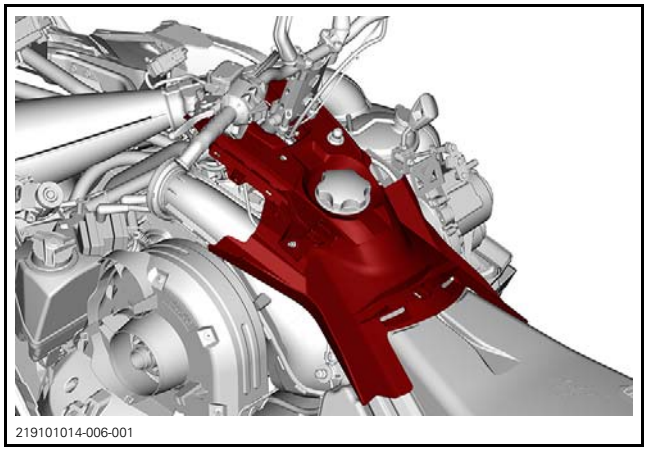
219101014-006-001

4. Remove the battery, if applicable.

*16 in Track*

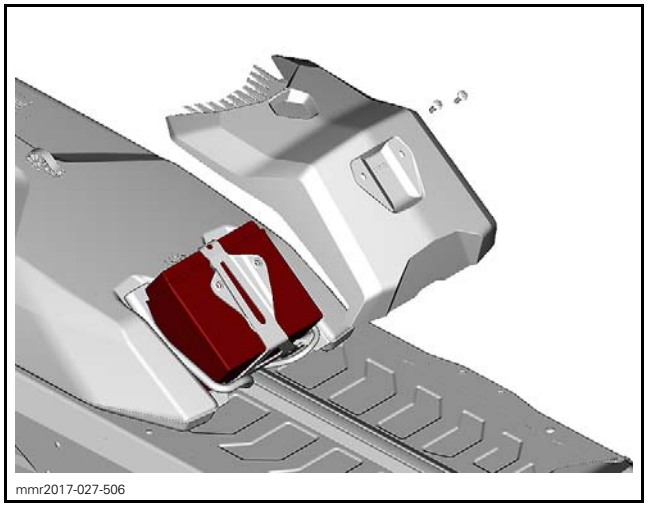
mmr2017-027-506

*20 in Track*

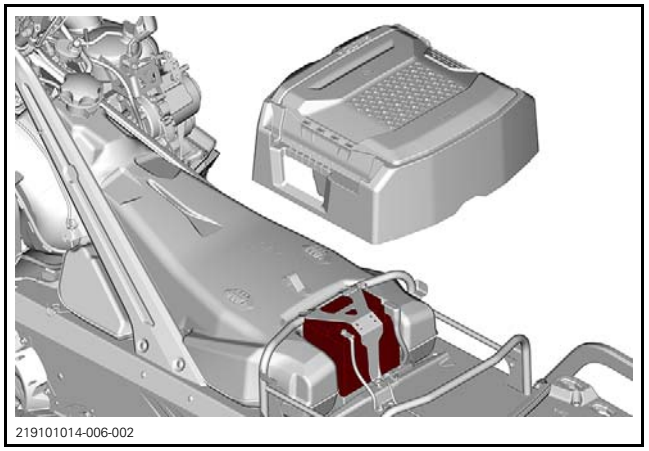
219101014-006-002

*All Models*

5. Remove rear frame members. Refer to *FRAME* subsection.

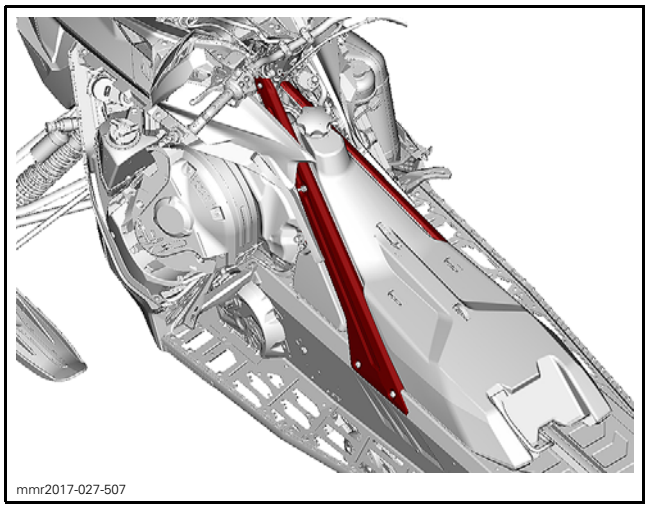
mmr2017-027-507

6. Remove and discard fuel tank retaining screws or rivets.

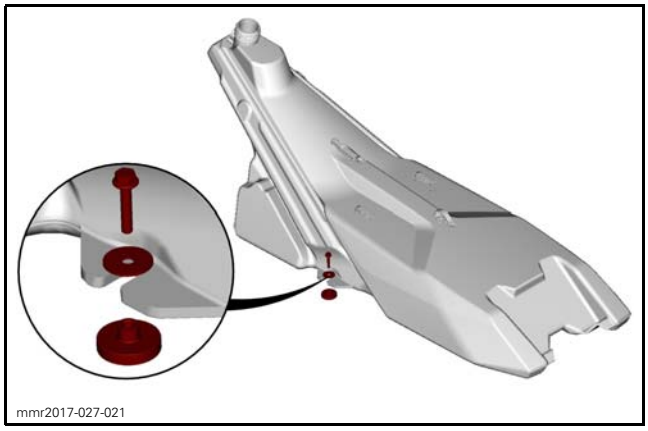
mmr2017-027-021

7. Remove fuel tank vent.

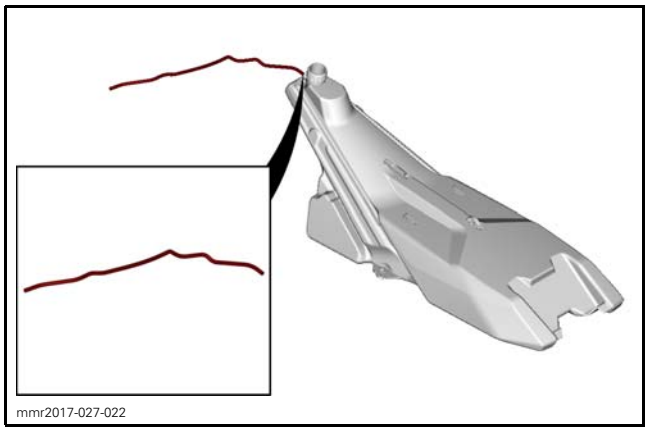
mmr2017-027-022

8. Remove fuel pump electrical connector.

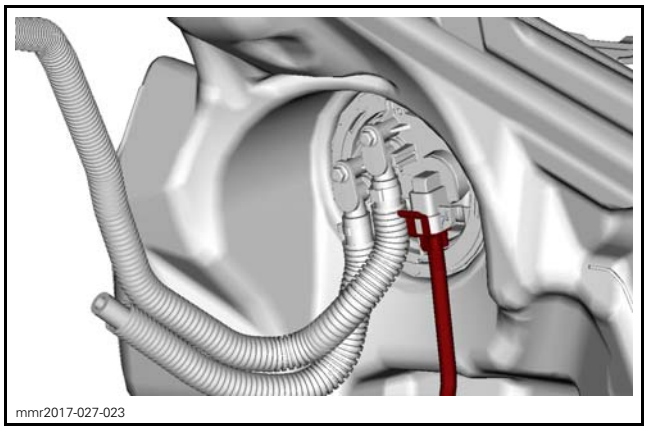
mmr2017-027-023

9. Remove fuel hoses from pump. Discard screws.

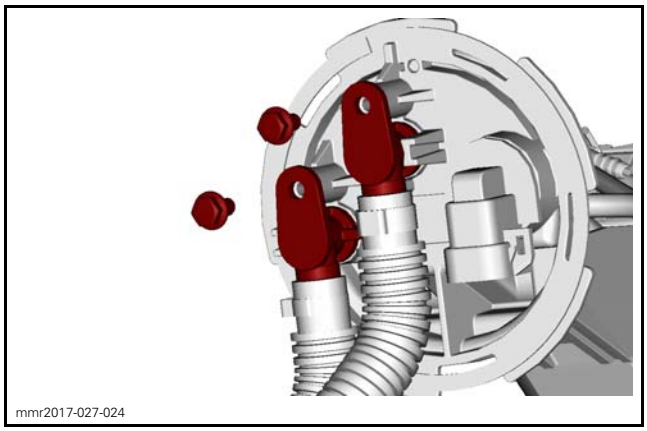
mmr2017-027-024

10. Remove fuel tank.

### Installing the Fuel Tank

The installation is the reverse of the removal procedure. However, pay attention to the following.

Refer to appropriate subsections to properly reinstall all removed components.

Pressurize and test fuel system for leaks.

## FUEL PUMP

### Relieving Fuel Pressure

1. Connect vehicle to BUDS2, refer to the *COMMUNICATION TOOLS* subsection.
2. From the **Functions** page, relieve fuel pressure.

## Activating the Fuel Pump with BUDS2

NOTE: Activating the fuel pump as described in this procedure can be used for purging air from the fuel system whenever a fuel hose has been disconnected and reconnected. The pump should be activated for 15 seconds to ensure proper purging of the system.

1. Connect vehicle to BUDS2 software, refer to *COMMUNICATION TOOLS* subsection.
2. From the **Functions** page, activate the fuel pump.
3. Listen for fuel pump operation.

If you do not hear the pump come ON, select the **Faults** tab in BUDS2 and check for fault codes.

If there is no fault code, connect a known good fuel pump to the vehicle harness (in parallel) and repeat the test.

NOTE: No voltage test can be done when the fuel pump is disconnected.

If the second fuel pump functions when connected to the vehicle harness, then replace the fuel pump installed in the vehicle.

## Removing the Fuel Pump

1. Remove the fuel tank.
2. Remove fuel pump assembly snap ring from fuel tank.


mmr2017-027-026

3. Remove and discard fuel pump gasket.

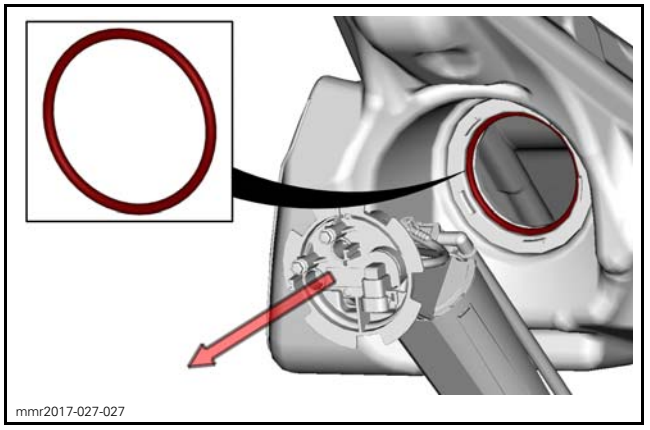
mmr2017-027-027

4. Visually inspect for broken or damaged ground wires, if any issue are found, the module should be replaced.

## Installing the Fuel Pump

The installation is the reverse of the removal procedure. However, pay attention to the following.

Make sure the remote pick-up is inserted all the way to the rear of fuel tank and does not interfere with the fuel level sensor float.

Install a **NEW** gasket on the fuel pump prior to installing the pump in the tank.

Ensure the fuel pump snap ring is fully engaged with the gap on top. Refer to image in removal procedure.

NOTE: The gasket must be installed on the fuel tank side so it is located between the pump and the fuel tank.

Install fuel tank.

**⚠ WARNING**

**After working on the fuel system, carry out a fuel system pressurization test to check for leaks. Failure to carry out a fuel system leak test could result in severe injury or a life threatening situation should a leak occur.**

# FUEL PUMP INLET FILTER

## Replacing the Fuel Pump Inlet Filter

1. Remove fuel pump assembly from fuel tank. Refer to procedure in this subsection.
2. Free the wires of the fuel level sensor of the fuel pump reservoir.

***NOTICE*** **Do not pull / push on wires or metal terminals that connect the grounding wires to the plastic parts. Keep hands and tools away from this area.**

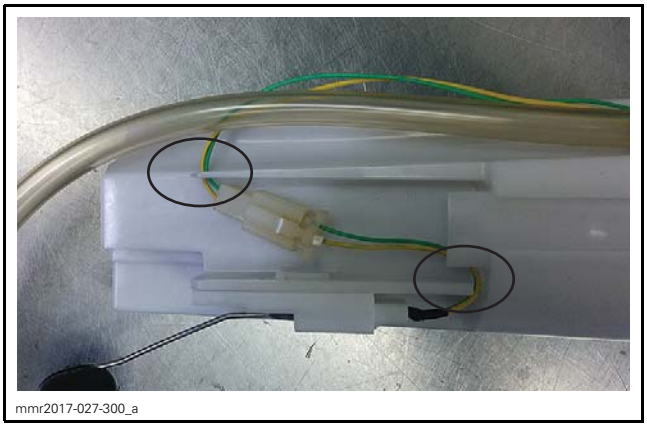
mmr2017-027-300_a

3. Unlock fuel pump reservoir by carefully inserting a small screwdriver between the tab and the fuel pump reservoir.

**NOTICE** Do not push directly on tabs or twist the screwdriver.

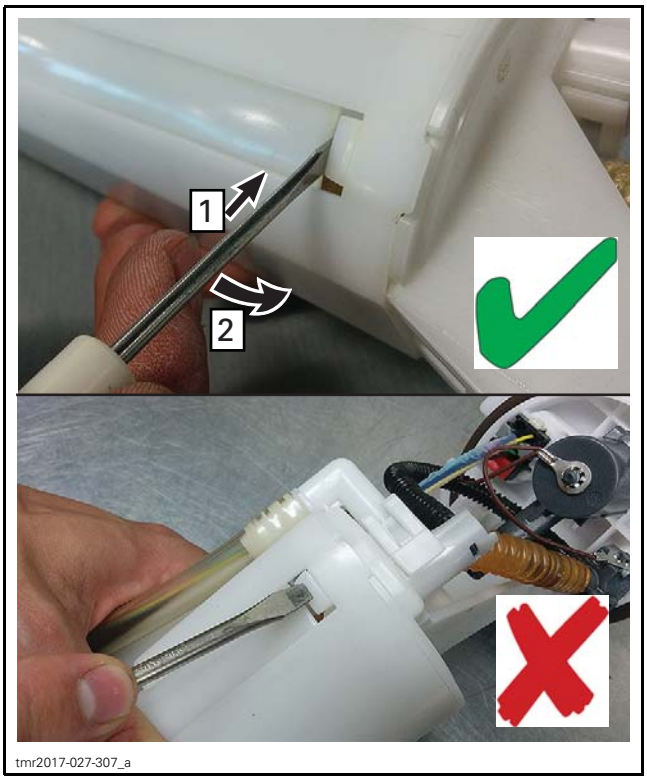

tmr2017-027-307_a

4. Completely remove fuel pump reservoir by pulling it carefully.

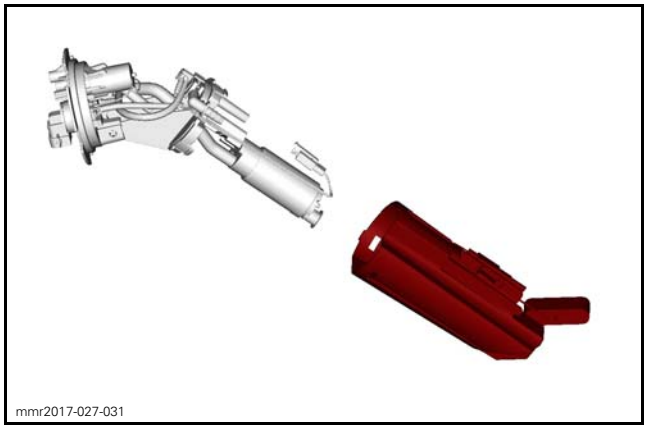
mmr2017-027-031

**NOTICE** To avoid damaging wires, Pull the reservoir carefully and do not let reservoir hang by wires.

5. Remove inlet fuel pump filter by pulling on it. If the filter is hard to remove, pry the filter gently using a small screwdriver.

**NOTICE** Be careful to avoid scratching the outside diameter of the pump inlet fitting where the filter fits.


mmr2017-027-302_a

6. Discard inlet fuel pump filter and steel ring.
7. Install new fuel pump inlet filter.
   - 7.1 Insert inlet filter onto fuel pump by pressing it downward.
   - 7.2 Push the filter on until the fitting bottoms out on the pump inlet face, there should be no gap.

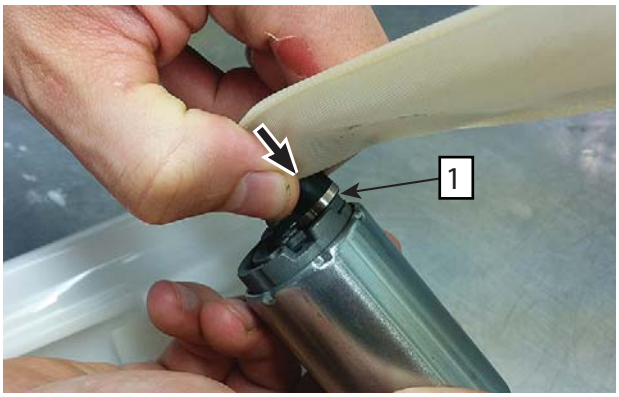

mmr2017-027-600_a

*1. No gap here*

7.3 Ensure that the filter hole is properly positioned into the pin.

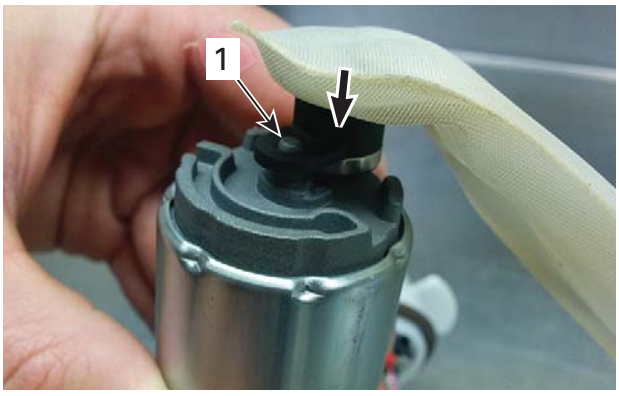

mmr2017-027-303_a

*1. Pin*

8. Install fuel pump reservoir carefully and ensure that all parts are properly positioned.

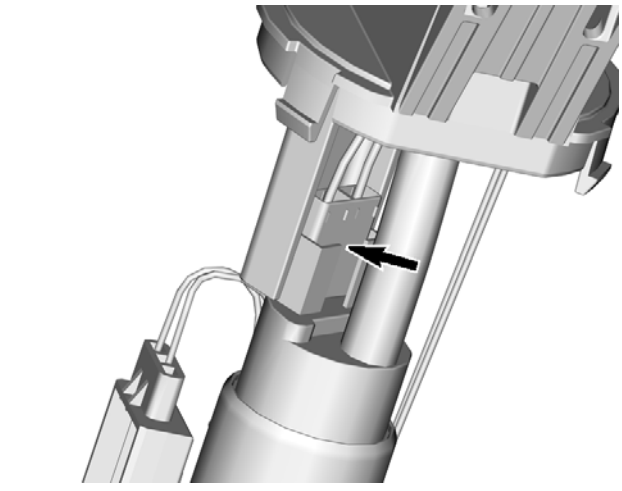
mmr2017-027-700_a

*ELECTRICAL CONNECTOR MUST BE IN THIS POSITION*

NOTE: Make sure the pump motor is positioned between the molded ribs in the reservoir.

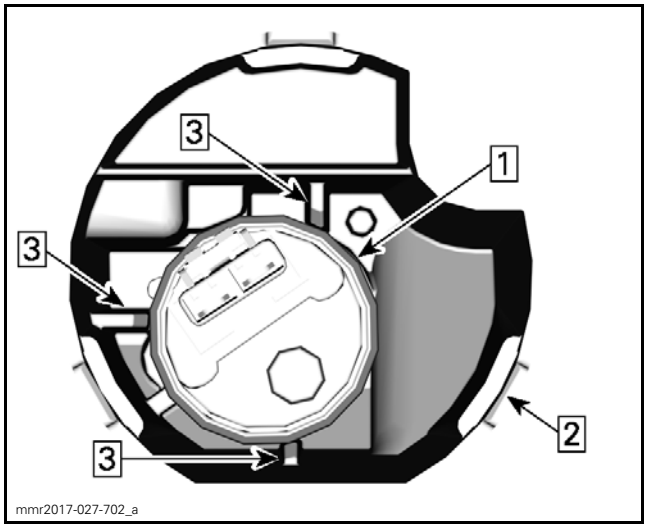

mmr2017-027-702_a

*1. Fuel pump motor*
*2. Reservoir*
*3. Ribs*

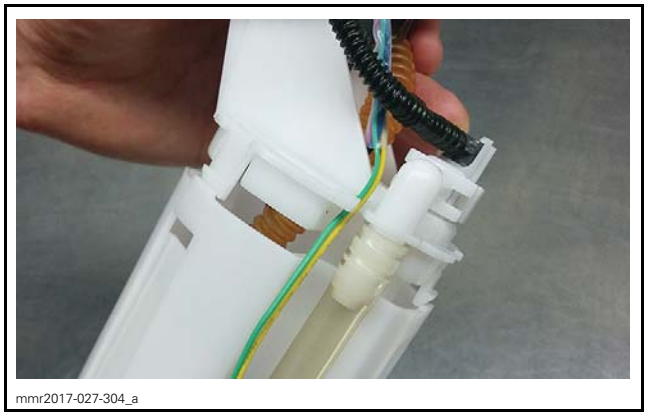
mmr2017-027-304_a

9. Ensure that fuel tank reservoir tabs are properly locked.
10. Route the fuel level sensor wires properly.

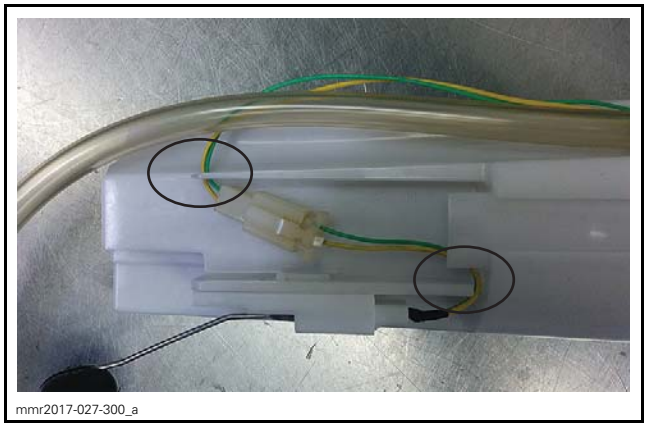
mmr2017-027-300_a

11. Reinstall fuel pump in fuel tank. Refer to procedure in this subsection.

# FUEL LEVEL SENSOR

NOTE: Verify the gauge functions related to the fuel level sensor before testing the sensor. Refer to *GAUGE* subsection.

## Testing Fuel Level Sensor Resistance

1. Remove fuel pump from fuel tank, refer to *FUEL PUMP* in this subsection.
2. Ensure the fuel level sensor is properly connected in the fuel pump module.
3. Measure the resistance at the fuel pump connector **(FP)**.

| FUEL LEVEL SENSOR BENCH TEST | | |
|---|---|---|
| PROBE | FLOAT POSITION | RESISTANCE |
| FP- B to FP-D | Empty | 95 Ω ± 5 Ω |
| | Full | 9 Ω ± 2 Ω |

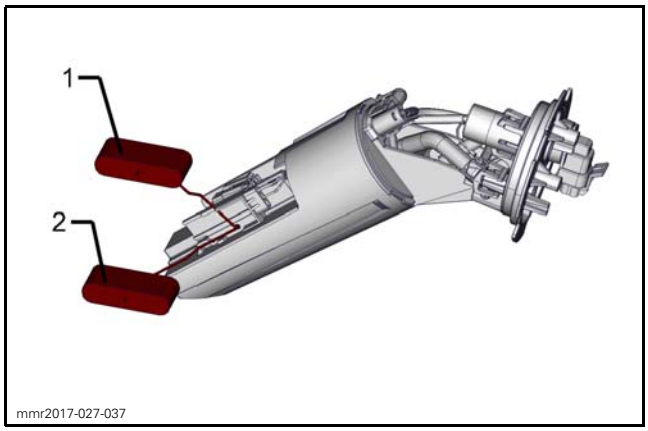


*TYPICAL FUEL PUMP FLOAT*
*1. Full position*
*2. Empty position*

4. When fuel level sensor travels from full to empty or vice-versa, there should be a constant linearity to the resistance readings. Any spike or drop of resistance indicates a "flat spot" in the fuel level sensor circuitry.

If fuel level sensor fails bench test, replace the fuel level sensor.

## Replacing the Fuel Level Sensor

1. Remove the fuel pump.

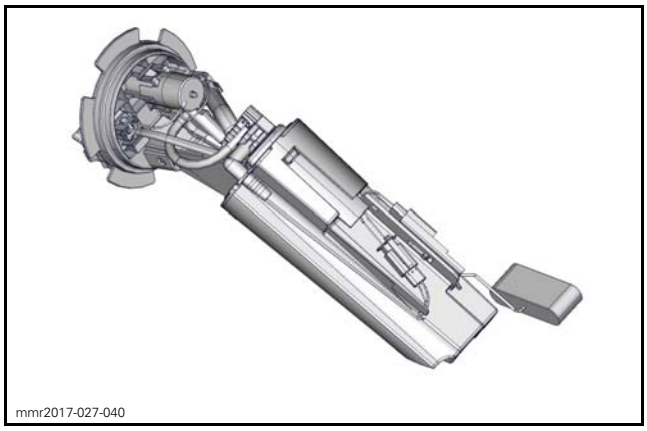


2. Disconnect fuel level sensor connector.

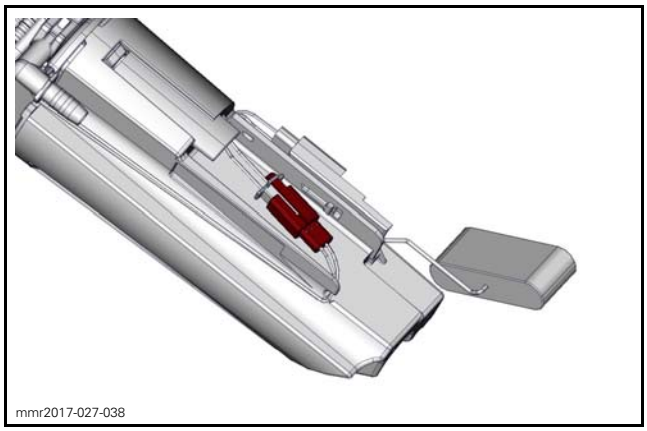


3. Slide the potentiometer out of the fuel pump reservoir.

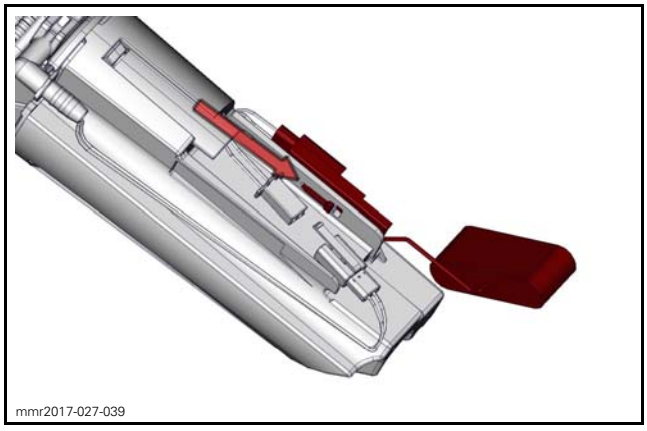


4. Remove fuel level sensor.
5. Replace the fuel level sensor with a new one and reverse steps.

# POWER DISTRIBUTION AND GROUNDS (EFI AND E-TEC)

## POWER DISTRIBUTION

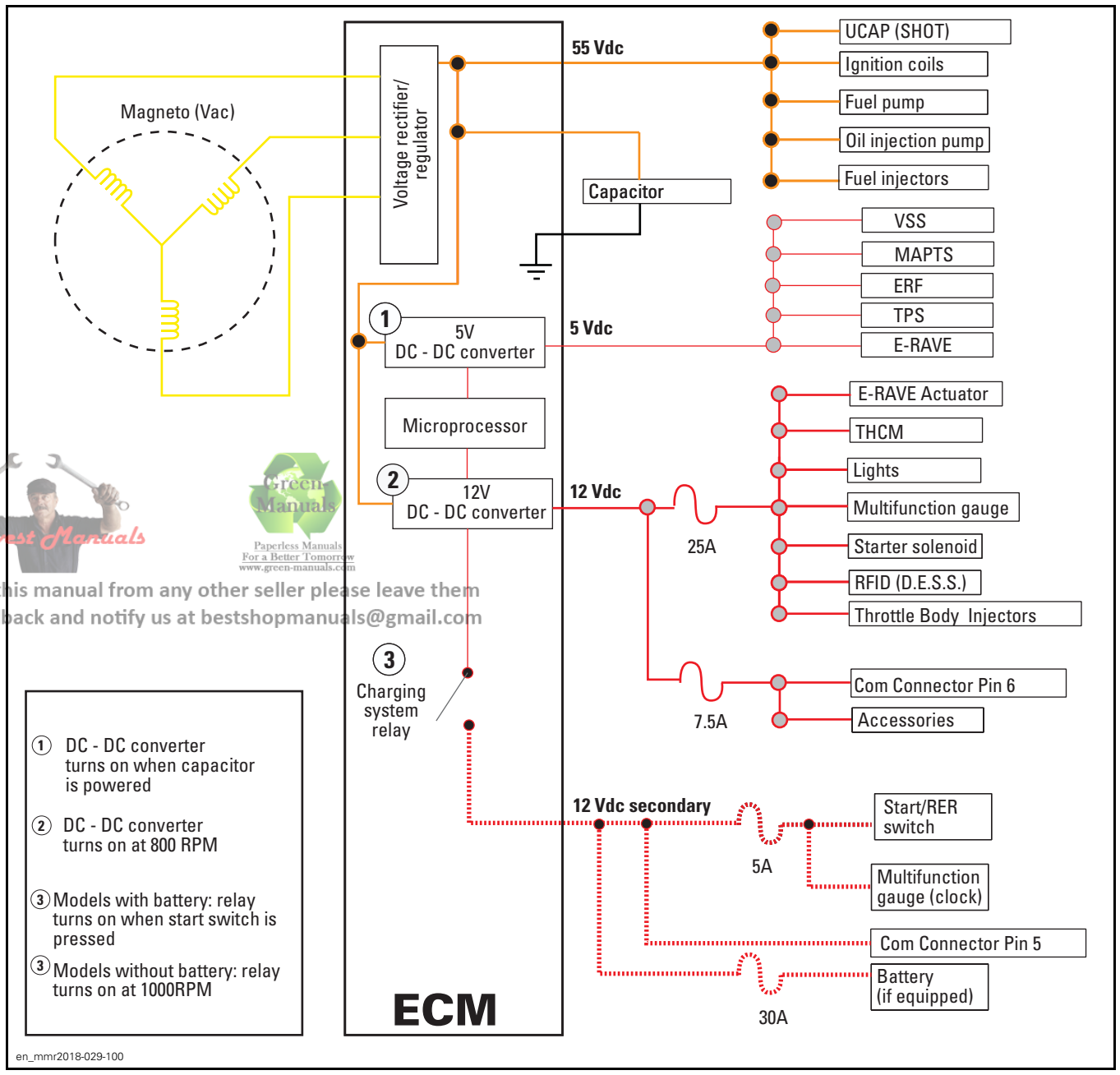


Midwest Manuals
Green Manuals
Paperless Manuals For a Better Tomorrow www.green-manuals.com
If you bought this manual from any other seller please leave them NEGATIVE feedback and notify us at bestshopmanuals@gmail.com

# GROUNDS

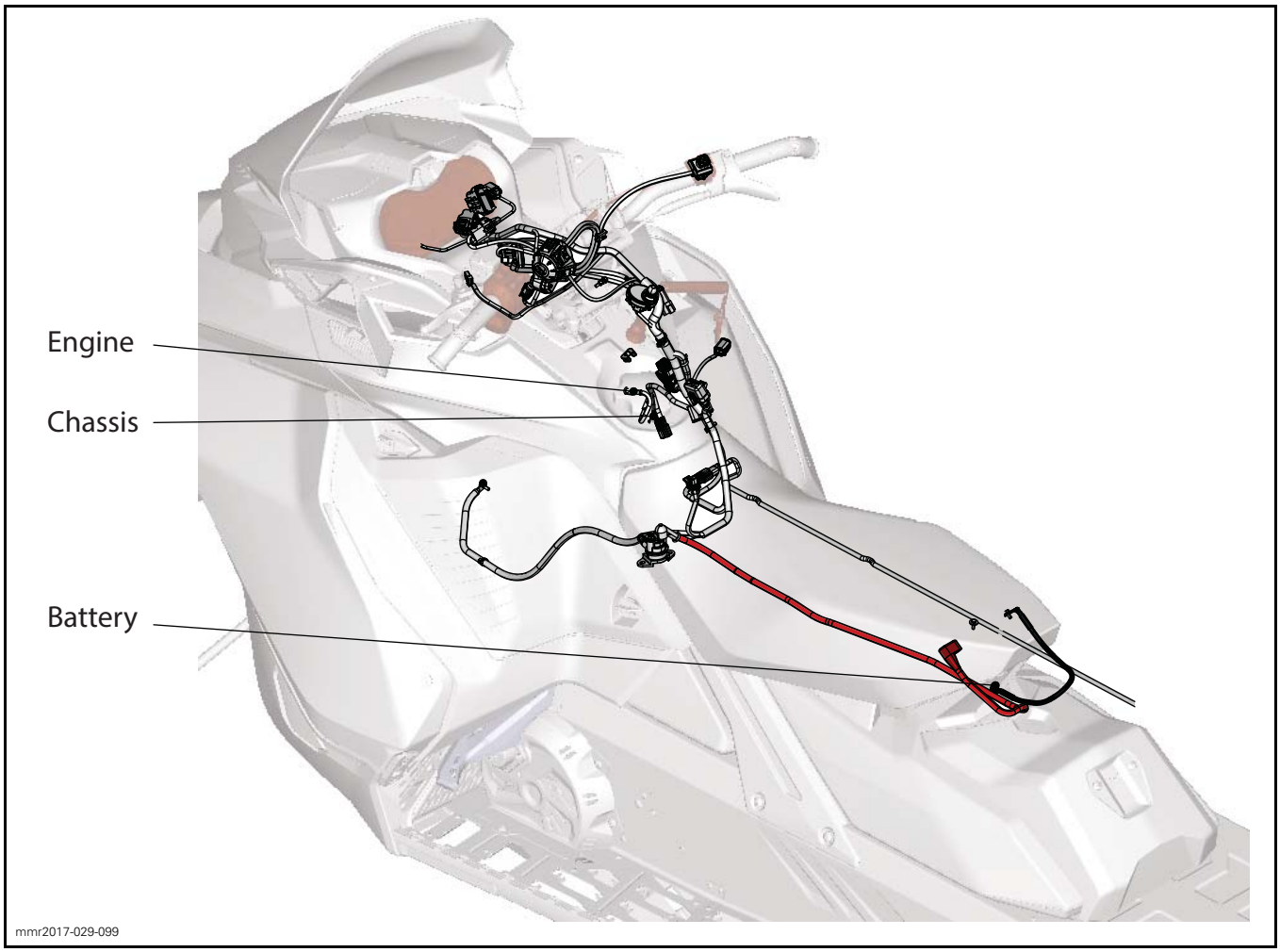

# GENERAL

## OVERVIEW

Power distribution is shown in red on the wiring diagram. Refer to *KNOWLEDGE CENTER*.

The magneto stator is wired with a 3 phase star configuration winding.

At high RPM if the magneto power is greater than the loads, the ECM will shunt the stator windings to regulate its power as necessary.

The voltage regulator/rectifier is part of the ECM.

The ECM receives the energy produced by the magneto, rectifies the alternating current (AC) to direct current (DC) and regulates the voltage.

## SYSTEM VOLTAGE (55 VDC)

Since the available power is low when cranking, the ECM first supplies 55 Vdc to the illustrated components that need voltage for the starting and the basic operation of the engine.

NOTE: When starting, voltage may be closer to 40Vdc until RPM increases.

### ECM

For more information, refer to *ENGINE MANAGEMENT SYSTEM* subsection.

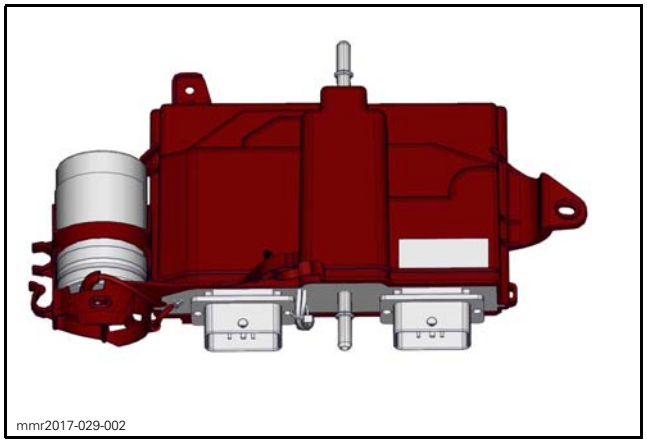
mmr2017-029-002

### UCAP (SHOT System)

For information, refer to *SHOT SYSTEM* subsection.

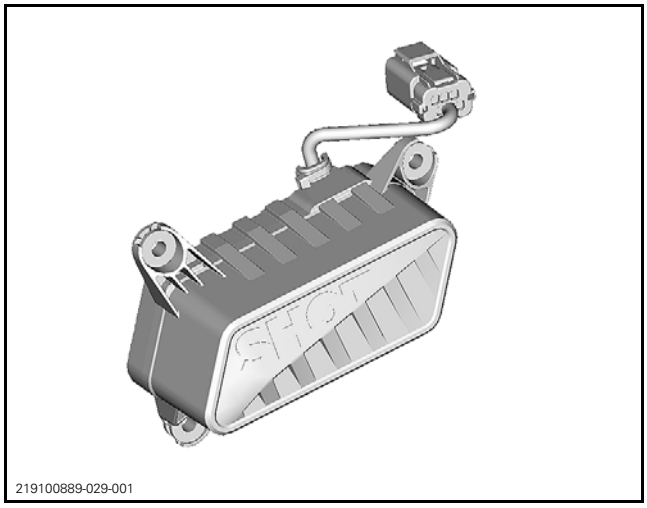
219100889-029-001

### Fuel Injector

For more information, refer to *E-TEC DIRECT FUEL INJECTION* subsection.

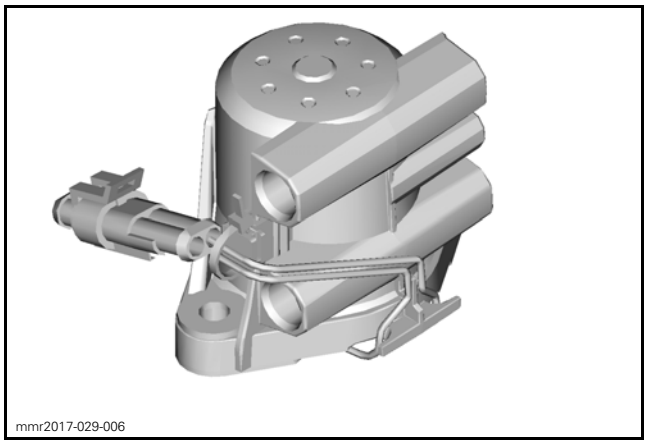
mmr2017-029-006

### Ignition Coil

For more information, refer to *IGNITION SYSTEM* subsection.

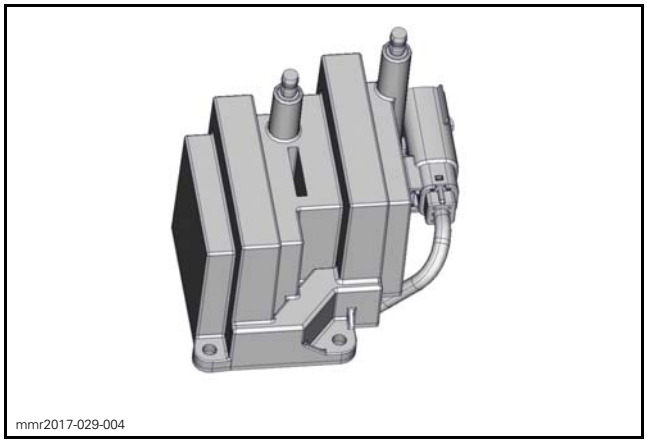
mmr2017-029-004

### Fuel Pump

For more information, refer to *FUEL TANK AND FUEL PUMP* subsection.

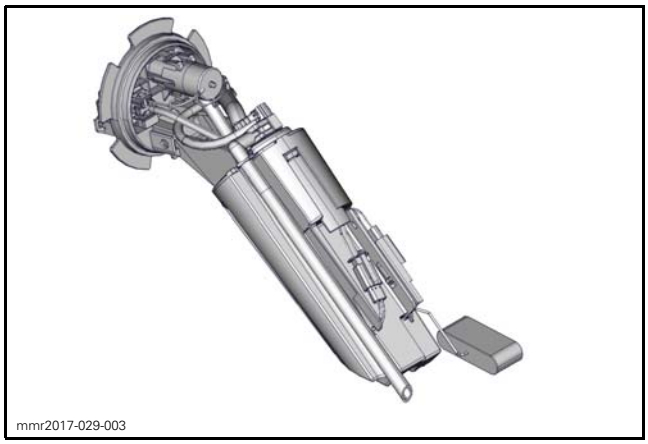
mmr2017-029-003

### Capacitor

For more information, refer to *CHARGING SYSTEM* subsection.

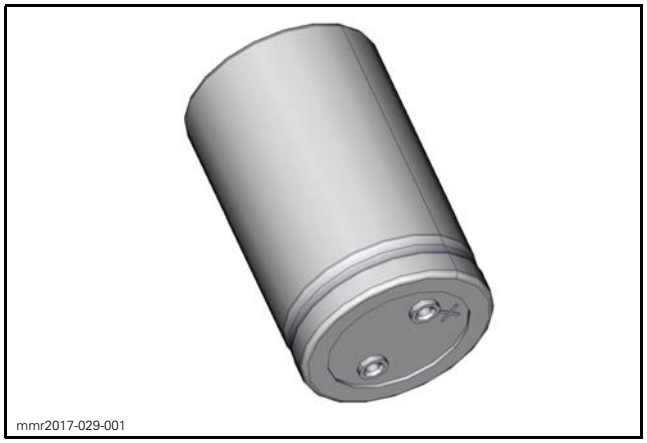
mmr2017-029-001

## SYSTEM VOLTAGE (12 VDC)

A DC-DC converter, in the ECM, steps down the 55 DC voltage to 12 Vdc when the engine reaches 800 RPM.

Since the available power is not at its maximum at the early stage of engine starting, the ECM supplies 12 Vdc to the following components when engine reaches 800 RPM.

- THCM (thermocouple module)
- E-RAVE actuator
- Communication connector
- Lighting system
- Multifunction gauge
- Heaters
- Heated visor
- Auxiliary lights
- 12 V power outlet
- Other accessories.

Approximately 25 A are available at idle (1200 RPM). Refer to *CHARGING SYSTEM* for more information.

Below 2000 RPM, the total available current is limited to reduce the load on the system voltage.

Above 2000 RPM, the 12 Vdc system has a maximum of 30 A available.

If electrical system load is increased, or the RPM is decreased, the 12 Vdc system output is reduced in order to maintain 55 Vdc for engine operation.

## GROUNDS

### Engine

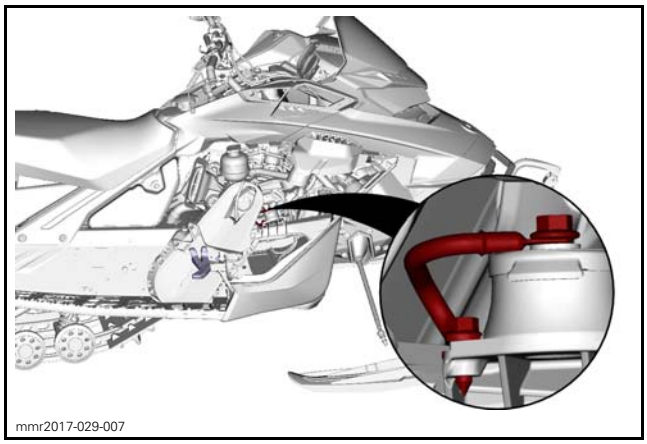
mmr2017-029-007

| TIGHTENING TORQUE | |
|---|---|
| M6 screw on chassis | 10 N•m ± 2 N•m (89 lbf•**in** ± 18 lbf•**in**) |

### Chassis

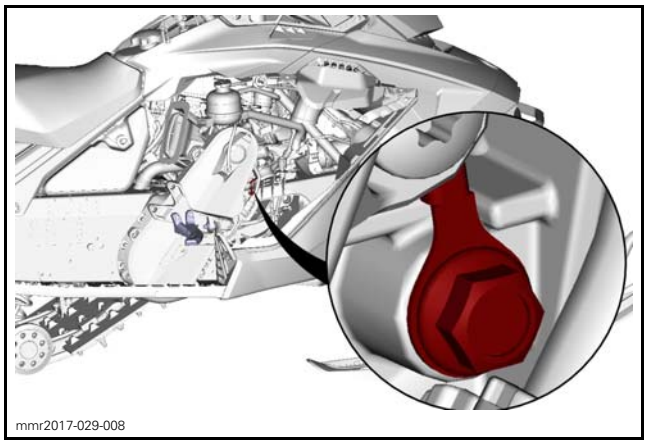
mmr2017-029-008

| TIGHTENING TORQUE | |
|---|---|
| M5 screw on chassis | 5 N•m ± 0.5 N•m (44 lbf•**in** ± 4 lbf•**in**) |

## Battery

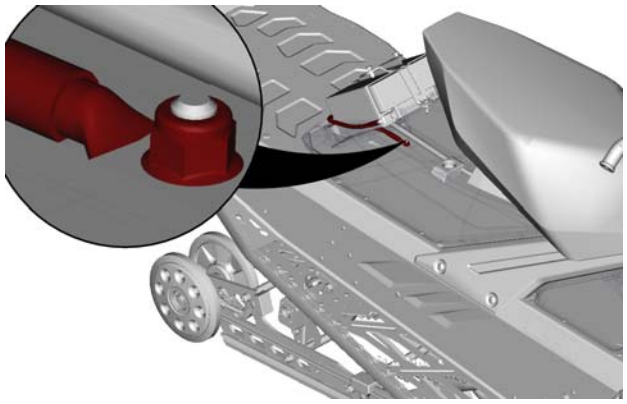
mmr2017-029-005

| TIGHTENING TORQUE | |
|---|---|
| M6 shoulder nut | 10 N•m ± 2 N•m (89 lbf•**in** ± 18 lbf•**in**) |

# POWER DISTRIBUTION AND GROUNDS (600 ACE)

## SERVICE TOOLS

| Description | Part Number | Page |
|---|---|---|
| FLUKE 115 MULTIMETER | 529 035 868 | 192 |

## GENERAL

### POWER DISTRIBUTION DIAGRAM

Refer to the *WIRING DIAGRAM*.

Power distribution is shown in red on the color wiring diagram. Refer to *KNOWLEDGE CENTER*.

NOTE: Refer to *WIRING DIAGRAM INFORMATION* subsection for how to properly interpret the *WIRING DIAGRAM*.

# OVERVIEW

All the electrical system is powered by DC current supplied by a 12 V battery. The battery charge is maintained by the charging system.

Electrical system is protected by fuses located in a fuse box.

## Automatic Power Cut-Off

The ECM features an automatic power cut-off that will completely turn off the ECM (after engine was running) and thus cutting all power to components. All the vehicle electrical loads will be turned off (except the clock in the multifunction gauge). This feature prevents the battery from discharging if the tether cord cap is left on engine cut-off switch when the engine is not running.

NOTE: If a power cable is connected to the communication connector power cut-off will not occur.

The cut-off time is as follows.

| ACTION | POWER CUT-OFF TIME |
|---|---|
| Removing tether cord cap | Approximately 15 seconds |
| Setting emergency engine stop switch to STOP (tether cord cap connected) | Approximately 20 seconds |

NOTE: The ECM will remain off until the START/RER button is pressed.

# FUSES

## Fuse Box Location

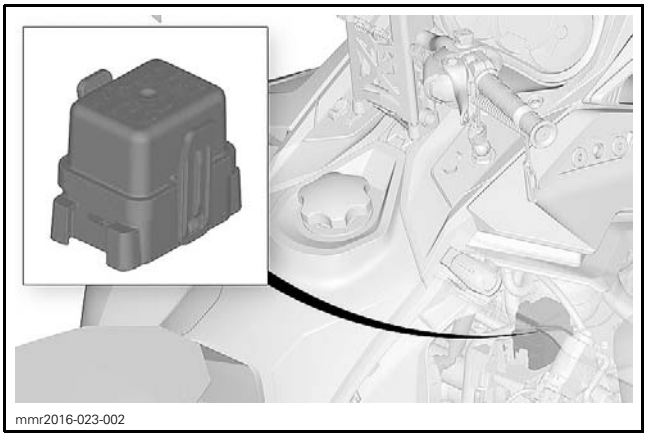
mmr2016-023-002

## Fuse Box

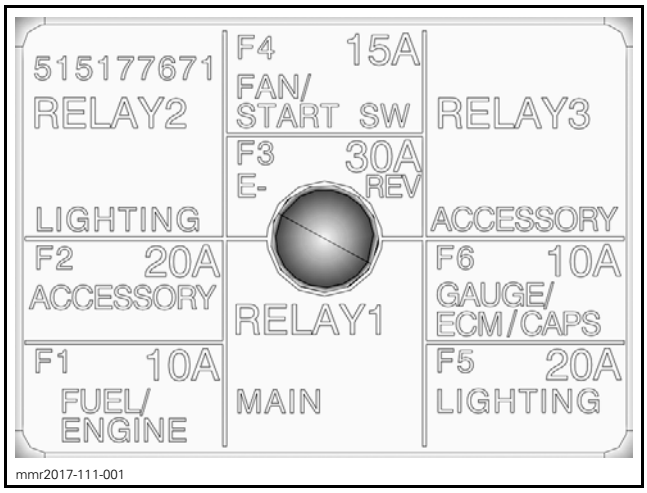

mmr2017-111-001

| | | |
|---|---|---|
| F1 | Fuel / Engine | 10 A |
| F2 | Accessory | 20 A |
| F3 | E-REV (if equipped) | 30 A |
| F4 | Fan / Start SW | 15 A |
| F5 | Lighting | 20 A |
| F6 | Gauge / ECM / CAPS | 10 A |

| | |
|---|---|
| R1 | Main |
| R2 | Lighting |
| R3 | Accessory |

| RELAY STATE (ON) | RELAY STATE (OFF) |
|---|---|
| R1 - Main Relay | |
| When START/RER button is pressed When engine is running | Refer to *AUTOMATIC POWER CUT OFF* in this subsection |
| R2 - Lighting Relay | |
| When engine reaches 800 RPM | Refer to *AUTOMATIC POWER CUT OFF* in this subsection **OR** If engine is turned off |
| R3 - Accessory Relay | |
| When engine reaches 1000 RPM | If engine drops below 950 RPM |

The following actions will be taken by the ECM to preserve electrical power for the most important functions.

| CONDITION | ECM CORRECTIVE ACTION |
|---|---|
| If battery voltage is lower than 12 V for 10 seconds | Relay 3 is disabled. |
| If battery voltage is lower than 11.5 V | Idle speed is increased. |
| If battery voltage is lower than 11 V | Low battery pilot lamp turns on. |

Fuse box contacts are identified as seen from underneath the fuse box with letters to identify rows and numbers to identify columns. The combined letter and number identify the coordinate of a contact that is used in the wiring diagram and procedures.

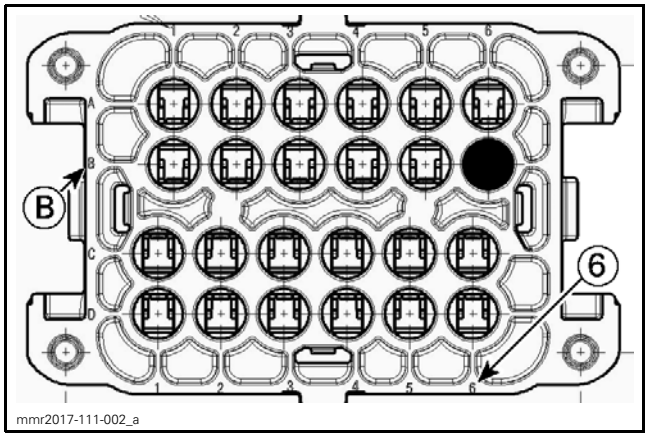


*BLACK DOT= CONTACT B-6*

**NOTICE** Do not apply any lubricant or sealant product to the terminal contacts in fuse box.

# GROUNDS

## Chassis Ground Locations

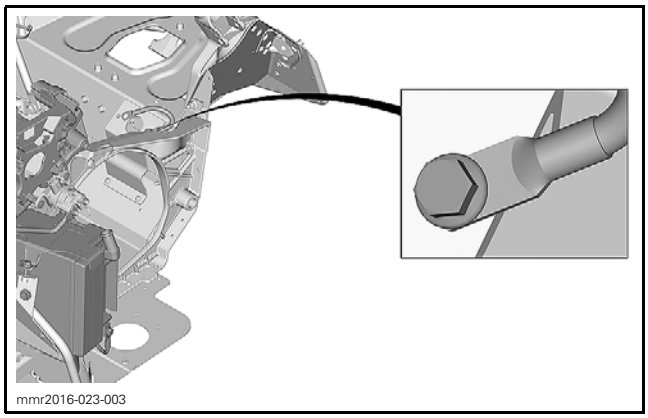


| TIGHTENING TORQUE | |
|---|---|
| Chassis Ground | 10 N•m ± 2 N•m (89 lbf•**in** ± 18 lbf•**in**) |

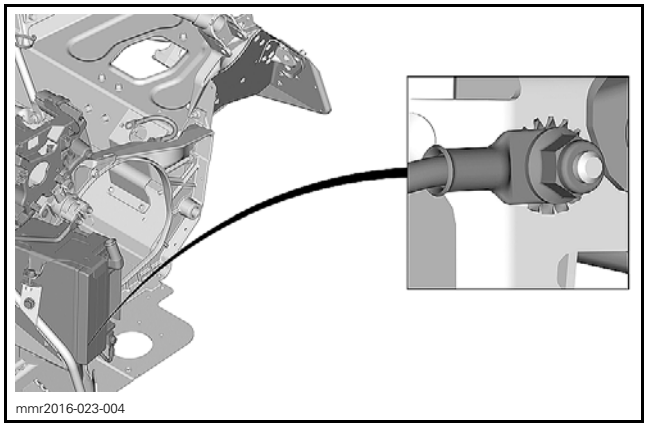


| TIGHTENING TORQUE | |
|---|---|
| Chassis Ground | 7.5 N•m ± 1 N•m (66 lbf•**in** ± 9 lbf•**in**) |

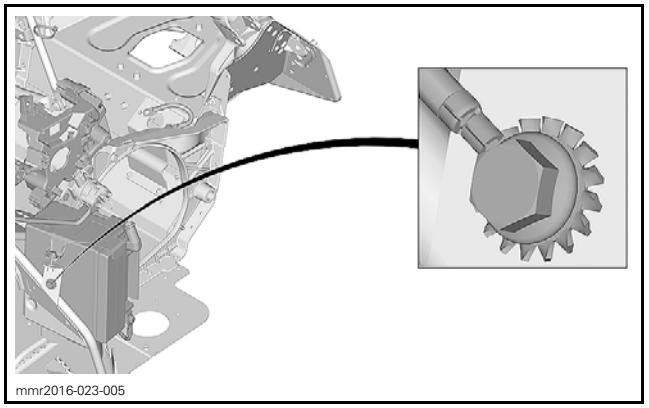


| TIGHTENING TORQUE | |
|---|---|
| Chassis Ground | 7 N•m ± 1 N•m (62 lbf•**in** ± 9 lbf•**in**) |

## Engine Ground Location

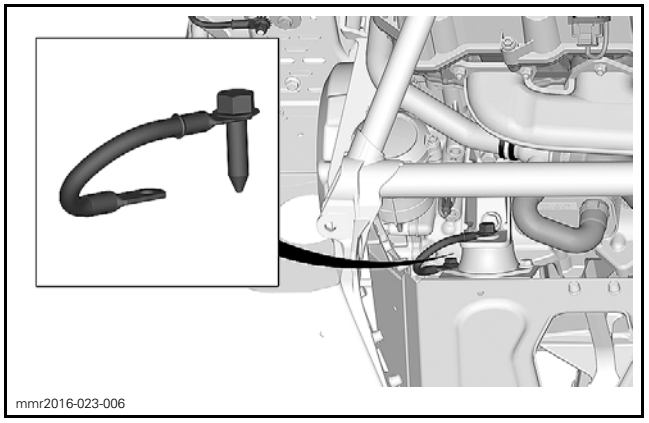

| TIGHTENING TORQUE | |
|---|---|
| Engine Ground | 31.5 N•m ± 3.5 N•m (23 lbf•ft ± 3 lbf•ft) |

# PROCEDURES

## FUSE INSPECTION

| REQUIRED TOOL |
|---|
| FLUKE 115 MULTIMETER (P/N 529 035 868) |

1. Set multimeter to Ω.
2. Probe fuse as follows.

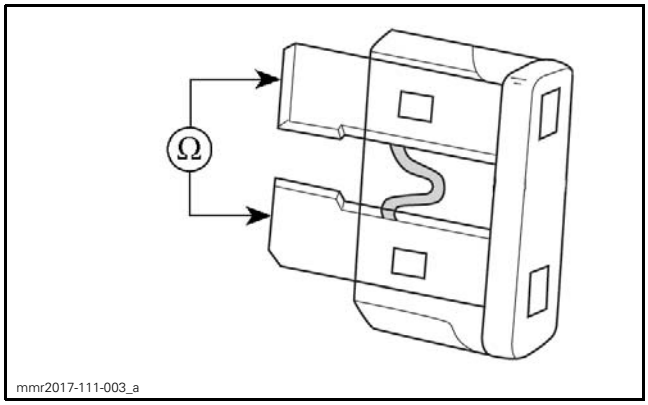

mmr2017-111-003_a

| RESISTANCE | FUSE STATUS |
|---|---|
| 0.5 Ω max. (continuity) | Good |
| Open circuit (OL) | Replace |

**⚠ WARNING**

**Do not use a higher rated fuse as this can cause severe damage to electric components and/or a fire. If fuse has burnt out, the cause of the malfunction should be determined and corrected before restarting.**

## RELAY CONTINUITY TEST

1. Remove relay.
2. Set multimeter to Ω.
3. Probe relay as follows.

| TERMINAL | | RESISTANCE |
|---|---|---|
| 30 | 87 | Open circuit (OL) |

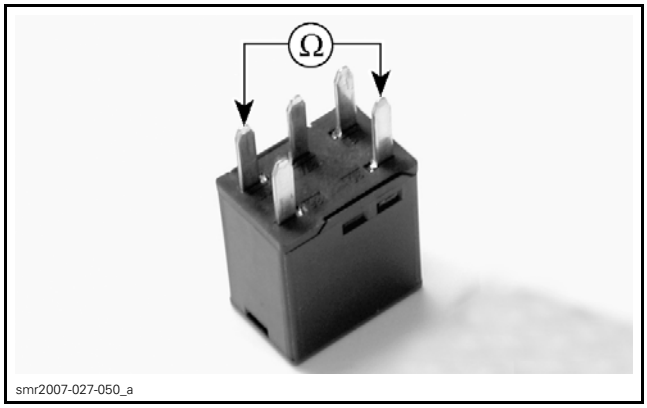

smr2007-027-050_a

4. Connect battery as shown and probe relay again as follows.

| TERMINAL | | RESISTANCE |
|---|---|---|
| 30 | 87 | 0.5 Ω max. (continuity) |

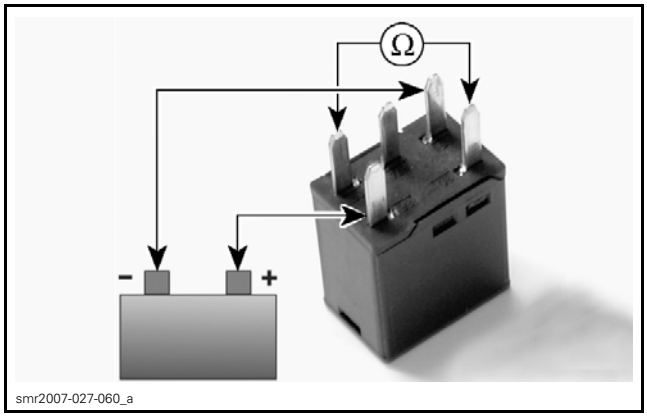

smr2007-027-060_a

If relay failed any test, replace it.

# POWER DISTRIBUTION AND GROUNDS (900 ACE AND 900 ACE TURBO)

## GENERAL

### OVERVIEW

The battery is the primary source of power for the electrical system, it is recharged by the magneto.

Some components are permanently connected to the battery (unswitched) while some require a relay or switch to be closed (switched).

At high RPM if the magneto power is greater than the loads, the rectifier/regulator will regulate power as necessary.

The system uses an external voltage regulator/rectifier.

### FUSE HOLDER (FA)

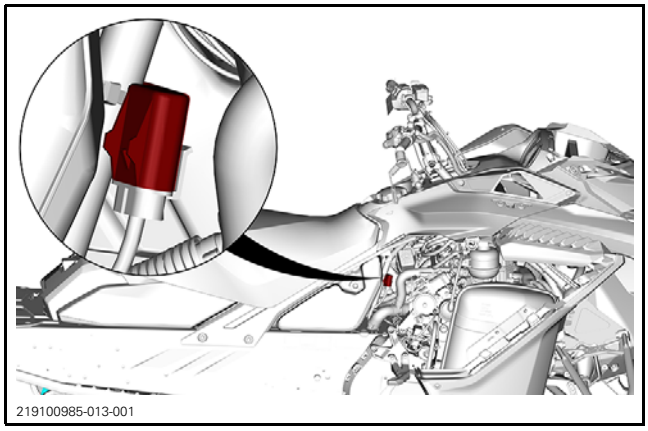
219100985-013-001

### FUSE BOX (FB1)

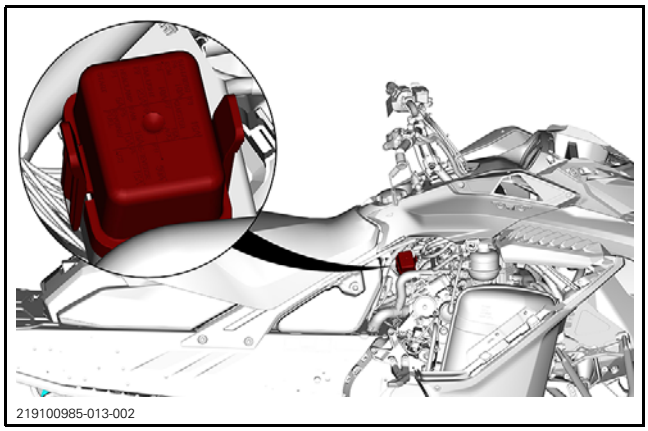
219100985-013-002

### RELAY BOX (FB2)

*With Electric Reverse and Air Controlled Suspension*

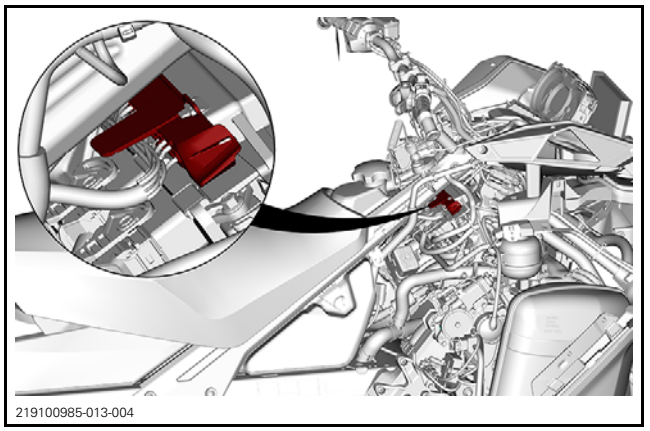
219100985-013-004

### GROUND LOCATIONS

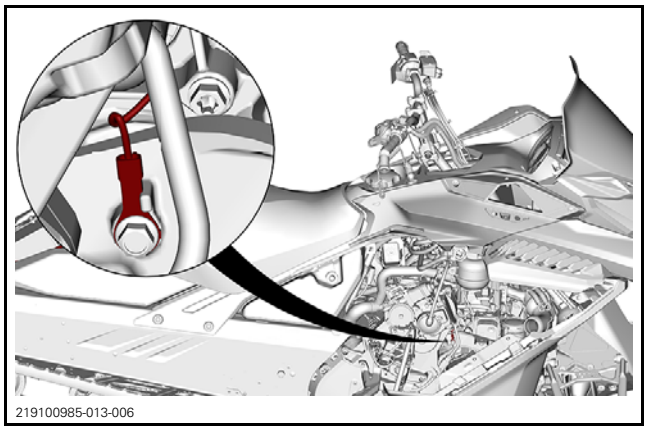
219100985-013-006

*CHASSIS GROUND*

| TIGHTENING TORQUE | |
|---|---|
| Chassis ground terminal | 8 N•m ± 0.5 N•m (71 lbf•**in** ± 4 lbf•**in**) |

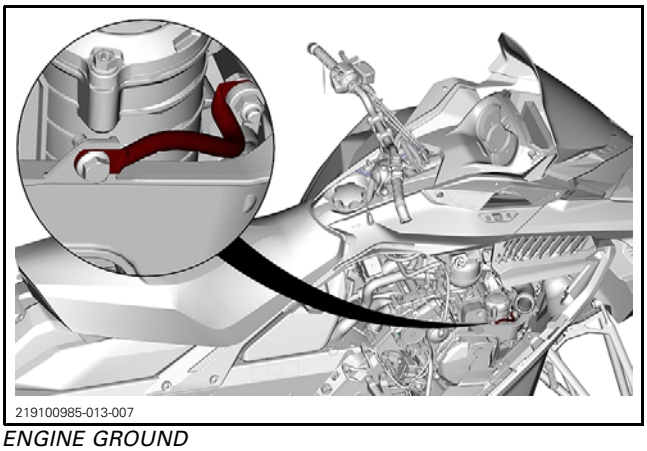


*ENGINE GROUND*

| TIGHTENING TORQUE | |
|---|---|
| Engine ground terminal | 10 N•m ± 2 N•m (89 lbf•**in** ± 18 lbf•**in**) |

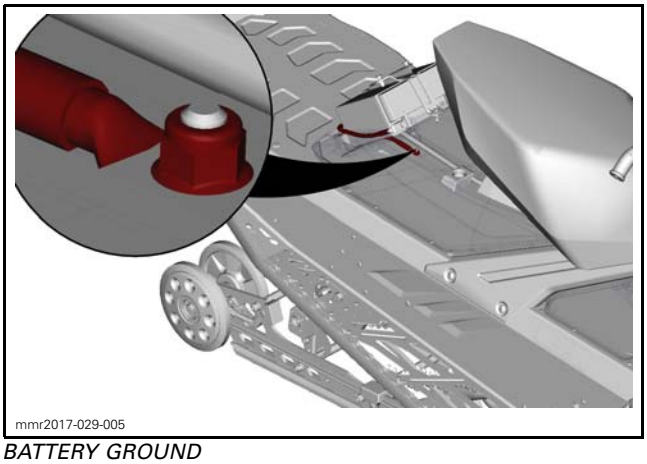


*BATTERY GROUND*

| TIGHTENING TORQUE | |
|---|---|
| M6 shoulder nut | 10 N•m ± 2 N•m (89 lbf•**in** ± 18 lbf•**in**) |

# WIRING HARNESS AND CONNECTORS (EFI)

## SERVICE TOOLS


| Description | Part Number | Page |
|---|---|---|
| ECM ADAPTER TOOL | 529 036 166 | 201 |
| ECM TERMINAL REMOVER 2.25 | 529 036 175 | 201 |
| ECM TERMINAL REMOVER 3.36 | 529 036 174 | 202 |


## SERVICE TOOLS – OTHER SUPPLIER


| Description | Part Number | Page |
|---|---|---|
| DELPHI TERMINAL EXTRACTOR | 12094429 | 204 |
| FCI TERMINAL EXTRACTOR TOOL | 54241678 | 203 |
| MOLEX 150 TERMINAL EXTRACTOR TOOL | 63813 - 1500 | 203 |

NOTE: Vehicles may not be equipped with all connectors shown in illustrations.

## CHASSIS HARNESS

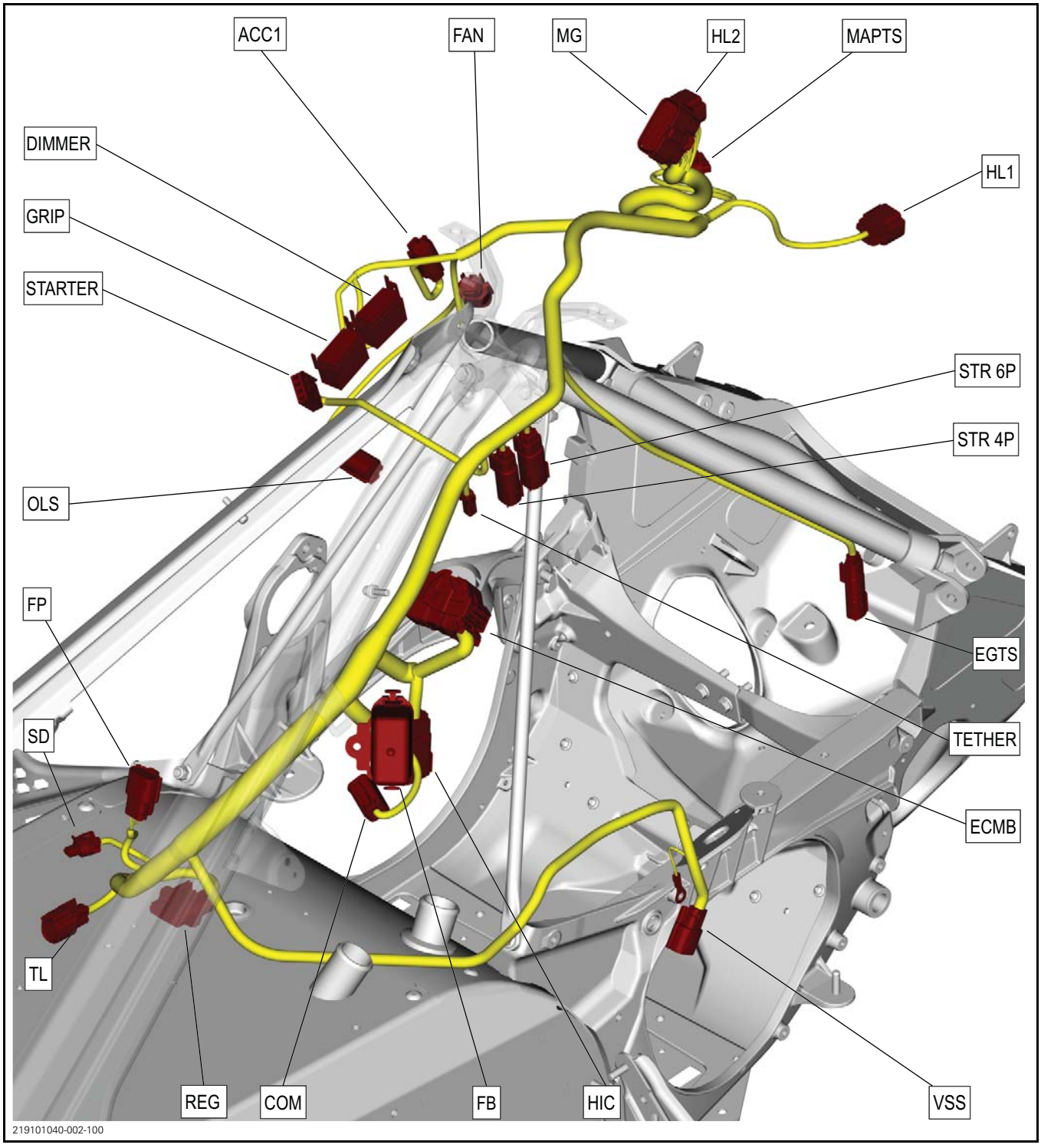

# ENGINE HARNESS

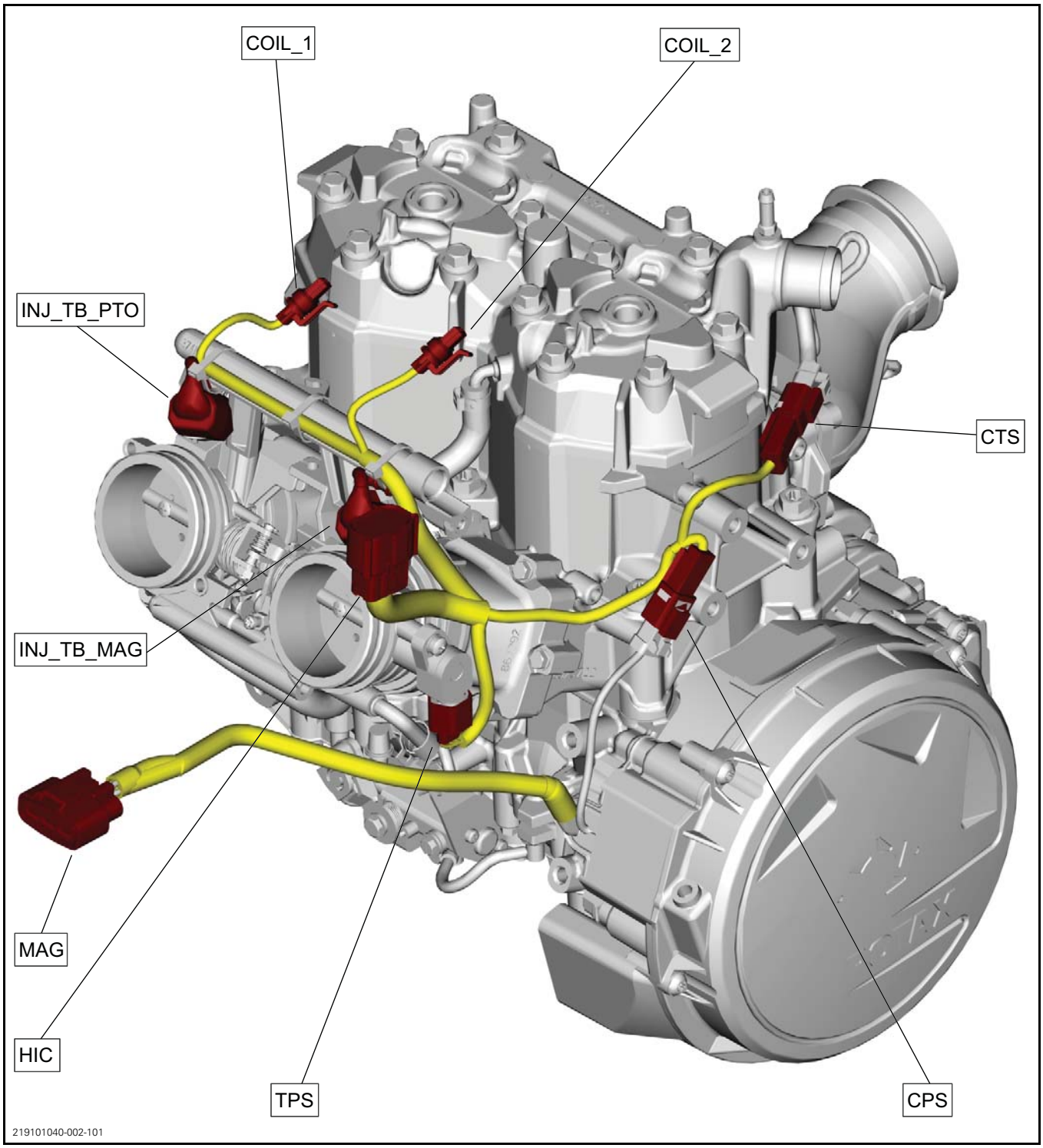

# GENERAL

## ACRONYMS

| ACRONYM | DESCRIPTION | ACRONYM | DESCRIPTION |
|---|---|---|---|
| ACC | Accessory | INJ_TB_MAG | Throttle Body Injector Magneto |
| COIL | Ignition Coil | INJ_TB_PTO | Throttle Body Injector PTO |
| COM | Diagnostic Link Connector | MAG | Magneto |
| CPS | Crankshaft Position Sensor | MAPTS | Manifold Air Pressure and Temperature Sensor |
| CTS | Coolant Temperature Sensor | MG | Multifunction Gauge |
| DIMMER | Dimmer switch | OLS | Oil Level Sensor |
| ECMB | ECM connector B (chassis harness) | REG | Voltage Regulator |
| EGTS | Engine Gas Temperature Sensor | SD | Starter Solenoid |
| FAN | Radiator fan | STARTER | Starter switch |
| FB | Fusebox | STR | Steering connector |
| FP | Fuel Pump | TETHER | Tether switch |
| GRIP | Heater switch | TL | Tail Light |
| HL | HeadLamp | TPS | Throttle Position Sensor |
| - | – | VSS | Vehicle Speed Sensor |

# PROCEDURES

**⚠ WARNING**

When disassembling any connector for repair or replacement on the vehicle, always disconnect the battery to ensure all electrical power is removed and prevent any possibility of a short circuit. Refer to *CHARGING SYSTEM* subsection.

## DIAGNOSTIC CONNECTOR (DEUTSCH)

### Disassembling and Reassembling the Connector

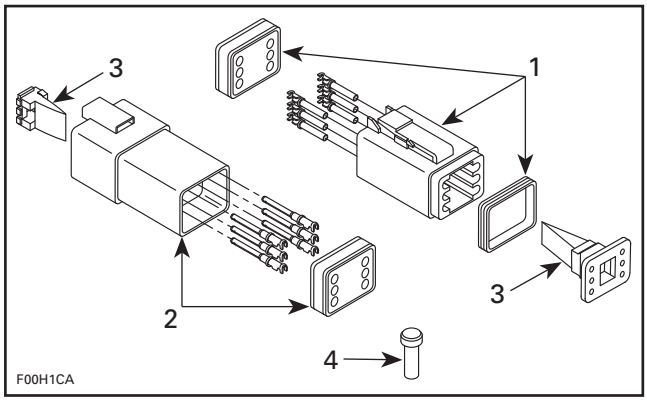


*TYPICAL - DEUTSCH CONNECTOR*
1. *Male connector*
2. *Female connector*
3. *Secondary lock*
4. *Sealing cap*

***NOTICE*** Do not apply dielectric grease on terminal inside connector.

To remove terminals from connector, proceed as follows:

1. Using long nose pliers, pull out the plastic lock from between the terminals.

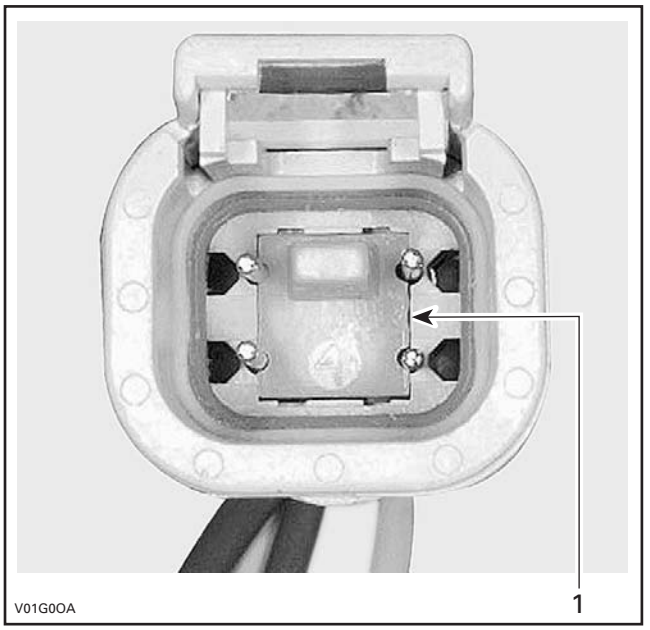


*TYPICAL - FEMALE CONNECTOR*
1. *Female lock*

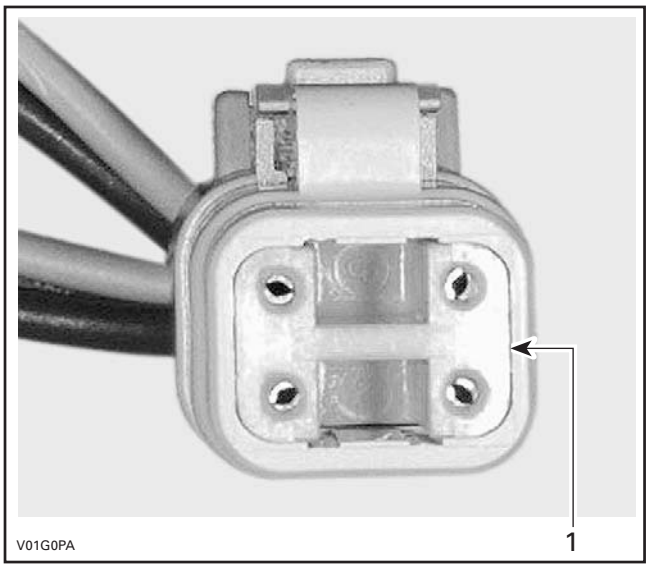


*TYPICAL - MALE CONNECTOR*
1. *Male lock*

NOTE: Before pin extraction, push wire forward to relieve pressure on retaining tab.

2. Insert a 4.8 mm (.189 in) wide screwdriver blade inside the front of the terminal cavity.
3. Pry the retaining tab away from the terminal while gently pulling the wire and terminal out of the back of the connector.

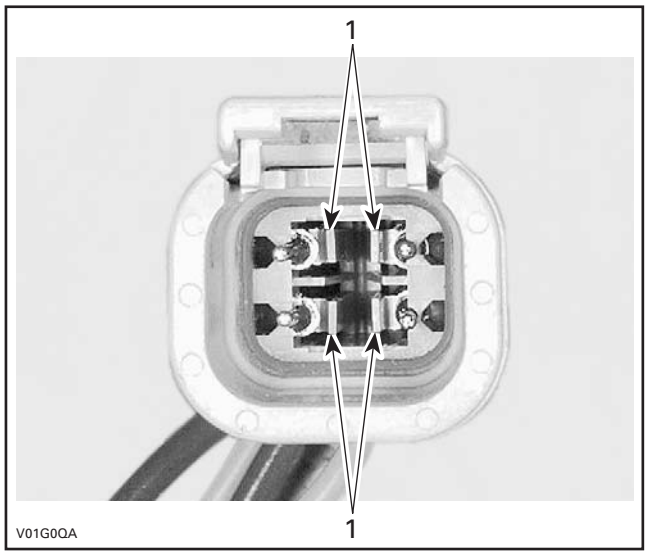


*TYPICAL - FEMALE CONNECTOR*
*1. Retaining tabs*

To install:

1. For insertion of a terminal, ensure the plastic lock is removed.
2. Insert terminal through the back of the connector in the appropriate position, and push it in as far as it will go. You should feel or hear the terminal lock engage.
3. Pull back on the terminal wire to ensure the retention fingers are holding the terminal.
4. After all required terminals have been inserted, the lock must be installed.

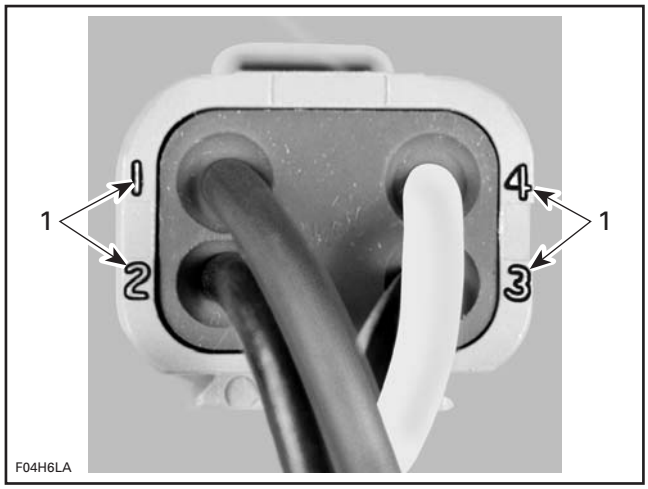


*TYPICAL - CONNECTOR PIN-OUT*
*1. Terminal position identification numbers*

# ECM CONNECTOR (MOLEX)

There is one connector on the ECM.

The vehicle wiring harness connector is connected to the ECM connector.

The engine wiring harness is connected to the vehicle harness through the HIC connector.

The ECM connector has 48 pins.

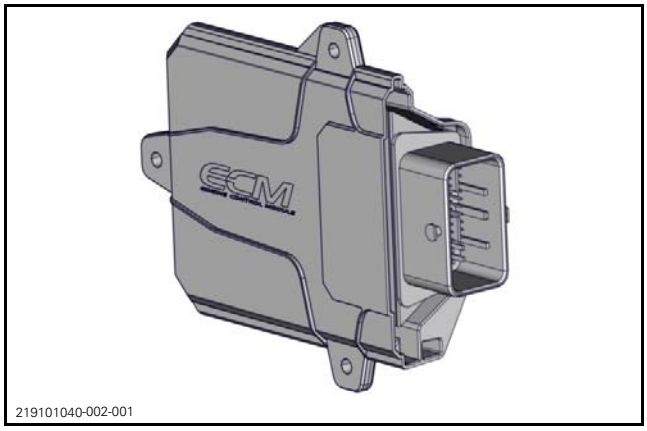


## Removing the Connector

1. To access the ECM, refer to *ELECTRONIC FUEL INJECTION (EFI)* subsection.
2. Press **and hold** the locking tab on the connector to be disconnected.

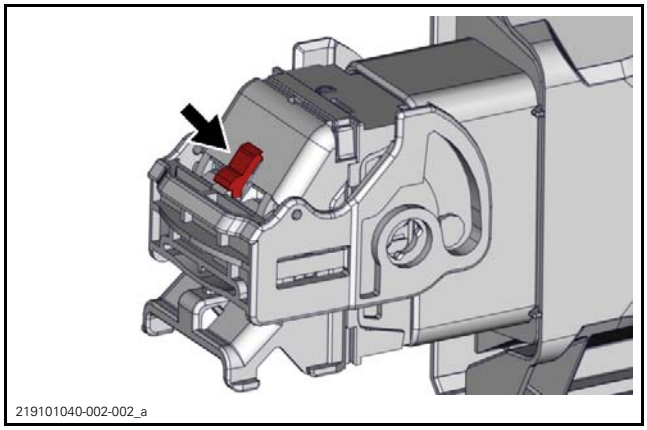


3. As you hold the locking tab, rotate the connector locking cam until it stops.

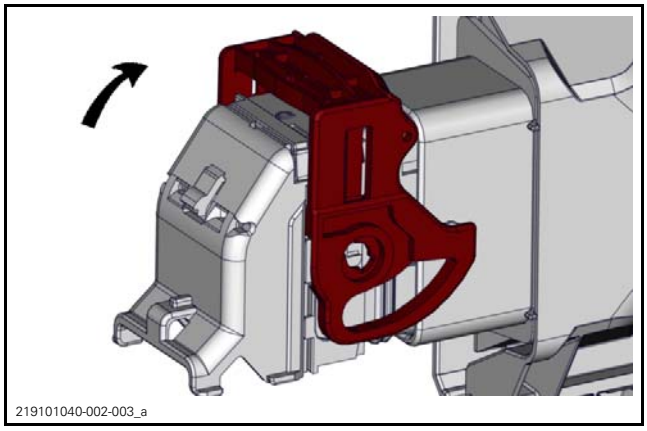


4. Pull connector off ECM.

## Installing the Connector

1. Insert connector on ECM with the locking cam fully open.
2. As you push the connector onto the ECM, rotate the connector locking cam until it snaps locked.

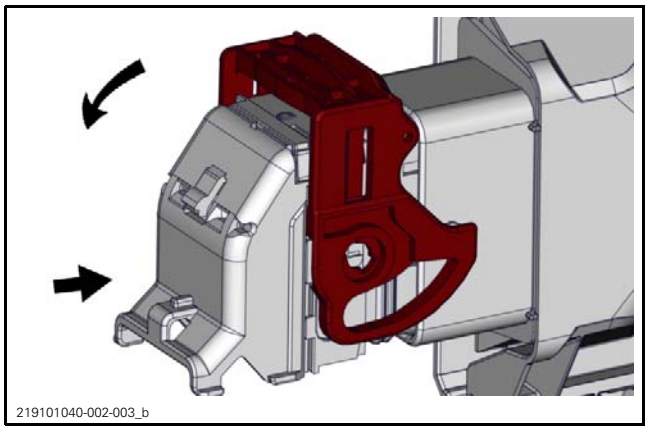


3. Ensure the locking tab is fully out.

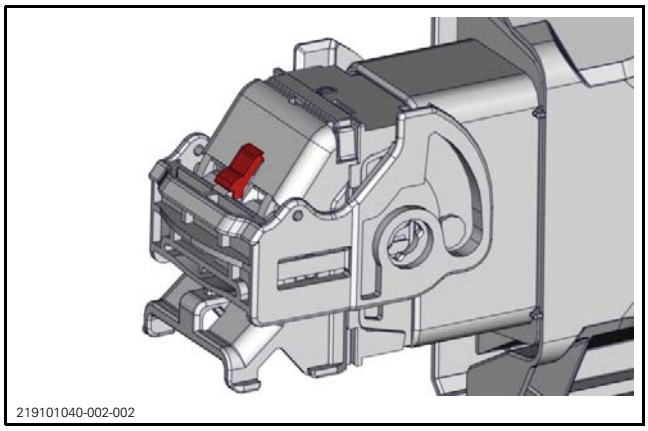


## Inspecting the Connector

Before replacing an ECM, always check electrical connections.

1. Ensure connector locking mechanism is functioning properly.
2. Ensure all wire terminals (pins) are properly locked in the connector.
3. Ensure they are very tight, make good contact with the pins in the ECM.
4. Ensure the pins in the harness connector and the ECM connector are clean, shiny and corrosion-free.

NOTE: A "defective ECM module" could possibly be repaired simply by disconnecting and reconnecting it.

**NOTICE** Do not apply any lubricant product to the pins of the ECM connector.

## Probing the Connector

The most recommended and safest method to probe the MOLEX (ECM) connector terminals is to use the ECM adapter tool. This tool will prevent deforming or enlarging of the terminals, which would lead to bad ECM terminal contact creating intermittent or permanent problems.

| REQUIRED TOOL | |
|---|---|
| ECM ADAPTER TOOL (P/N 529 036 166) |  |

1. Disconnect the ECM connector to be probed, and reconnect it on the ECM adapter.
2. Probe wire terminals of the circuit to be tested directly in the adapter holes.

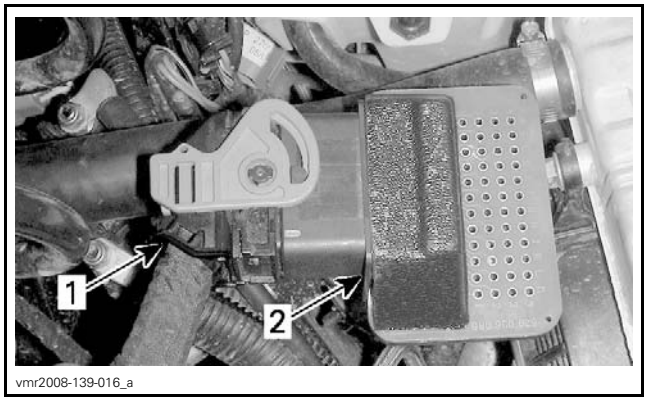


*TYPICAL*
*1. ECM connector*
*2. ECM adapter*

**NOTICE** Never probe directly on the ECM harness connector. This could change the shape or enlarge the terminals and create intermittent or permanent contact problems.

## Removing the Connector Terminal (Harness Connector)

To remove a signal terminal from the ECM harness connector, use the ECM terminal remover 2.25.

| REQUIRED TOOL | |
|---|---|
| ECM TERMINAL REMOVER 2.25 (P/N 529 036 175) |  |

To remove a power terminal, use the ECM terminal remover 3.36.

| REQUIRED TOOL | |
|---|---|
| ECM TERMINAL REMOVER 3.36 (P/N 529 036 174) |  |

1. Remove rear protector from connector.
2. Pull out the connector lock.

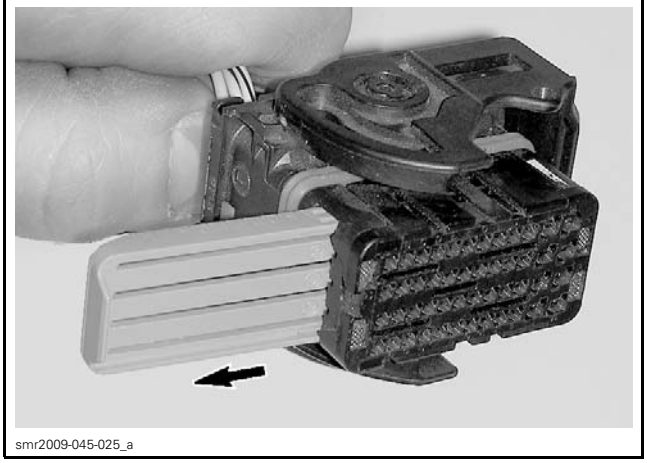
smr2009-045-025_a

3. Insert tool to unlock terminal.

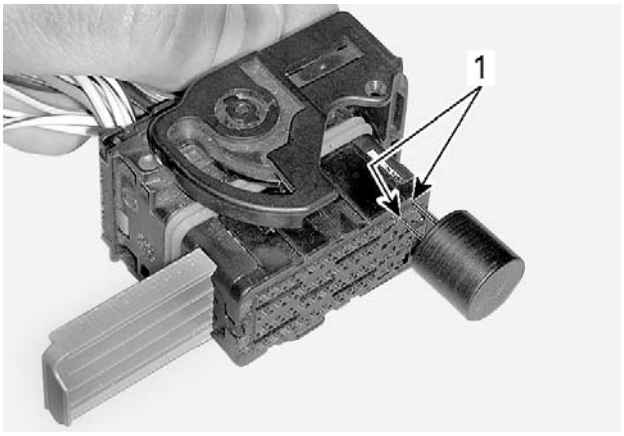

smr2009-045-026_a

*1. Unlock here*

4. Gently pull on the wire to extract the terminal out the back of the connector.

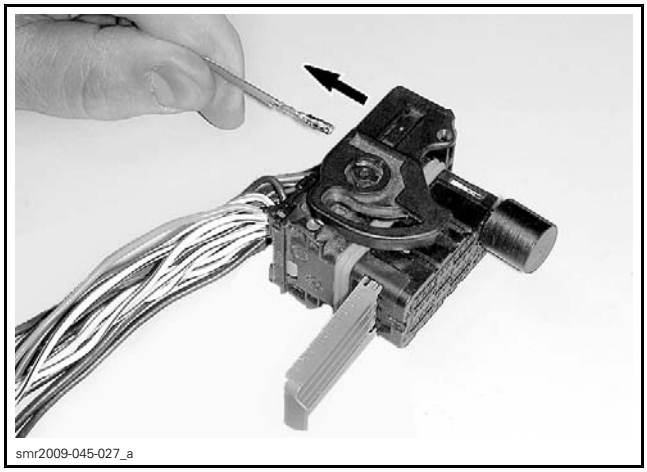
smr2009-045-027_a

**NOTICE** Before installing wire terminals in the connector, ensure all terminals are properly crimped on wires. After installation of wire terminals in the connectors, ensure they are properly locked by gently pulling on them as if to extract them.

# MOLEX CONNECTORS (EXCEPT ECM)

## Extracting a Terminal (Female Connector)

The same procedure must be done to remove a seal plug.

1. Insert a small flat screwdriver in the pry holes of the terminal locator, on the terminal side of the connector.

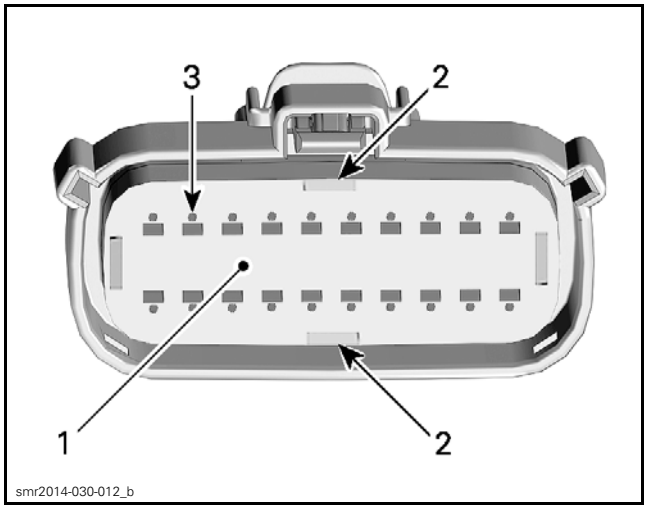

smr2014-030-012_b

*1. Terminal locator*
*2. Pry holes*
*3. Holes for inserting terminal extractor tool*

2. Apply slight pressure and pry the terminal locator out until it clicks (± 4 mm (.16 in)).

NOTE: Do not remove the terminal locator from the connector housing.

3. Insert the extractor tool in the small hole adjacent to the terminal.

NOTE: Push the extractor tool in only as far as required to release the lock from the terminal. The tool should slide along the terminal and be inserted between the connector housing and the terminal lock.

| REQUIRED TOOL | |
|---|---|
| FCI TERMINAL EXTRACTOR TOOL (P/N 54241678) |  |
| **or,** | |
| MOLEX 150 TERMINAL EXTRACTOR TOOL (P/N 63813 - 1500) |  |

4. Gently pull on the wire to extract the terminal out the back of the connector.

## Extracting the Terminal (Male Connector)

The same procedure must be done to remove a seal plug.

1. Using a pair of thin long nose pliers, pull the terminal locator (the white plastic insert in the connector) out to the detent position (± 13 mm (1/2 in) between terminal locator and connector housing face). This will allow unlocking of the pins.

***NOTICE*** **Do not attempt to remove the terminal locator or damage will occur. Be careful not to bend the pins when using the pliers.**

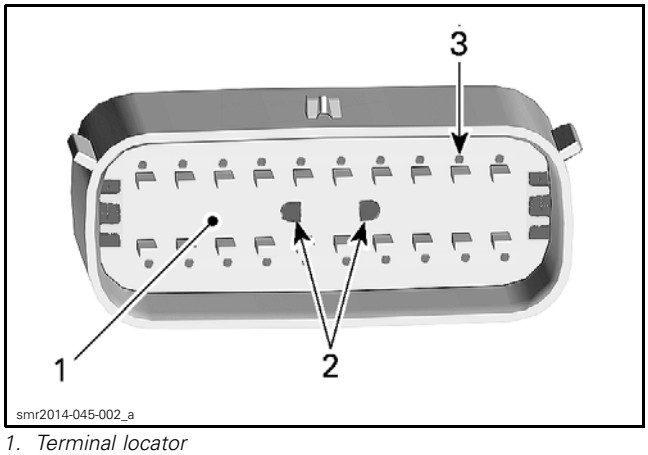


*1. Terminal locator*
*2. Insert long nose pliers here*
*3. Holes for inserting terminal extractor tool*

2. Insert the extractor tool in the small hole adjacent to the terminal.

NOTE: Push the extractor tool in only as far as required to release the lock from the terminal. The tool should slide along the terminal and be inserted between the connector housing and the terminal lock.

| REQUIRED TOOL | |
|---|---|
| FCI TERMINAL EXTRACTOR TOOL (P/N 54241678) |  |
| **or,** | |
| MOLEX 150 TERMINAL EXTRACTOR TOOL (P/N 63813 - 1500) |  |

3. Gently pull on the wire to extract the terminal out the back of the connector.

## Inserting the Terminal

1. Ensure the terminal is properly crimped onto the wire.
2. Ensure the terminal locator (the white plastic insert in the connector) is out in the detent position.
3. Orient the key on the back of the male terminal with the keyway on the rear of the housing

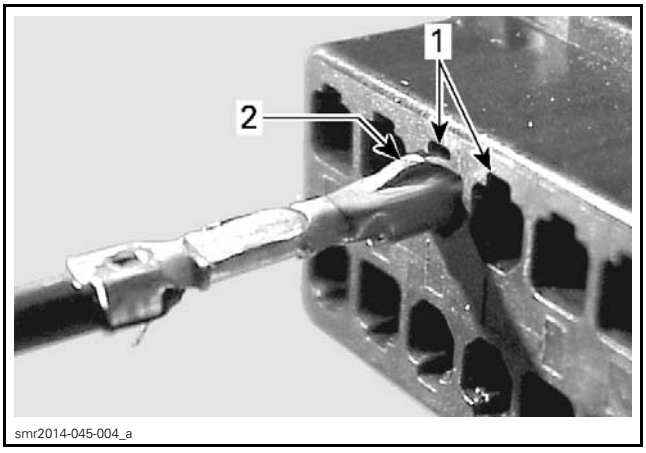


*TYPICAL - PIN INSERTION*
*1. Keyway*
*2. Terminal key*

4. Push the terminal into the housing until it clicks.
5. Gently pull on the terminal to ensure it is properly locked.
6. Repeat previous steps for each terminal to be inserted.
7. Push the terminal locator into the connector to the locked position.

# DELPHI/PACKARD CONNECTORS

## Removing the Connector Terminal

To remove a terminal (pin) from the connector, use a special tool such as the Delphi terminal extractor.

| REQUIRED TOOL | |
|---|---|
| DELPHI TERMINAL EXTRACTOR (P/N 12094429) |  |

NOTE: Grinding the tool end to a taper is required.

1. Carefully insert the tool in the space provided to release the pin lock.
2. Push the pin out the front of the connector by pushing on the wire.

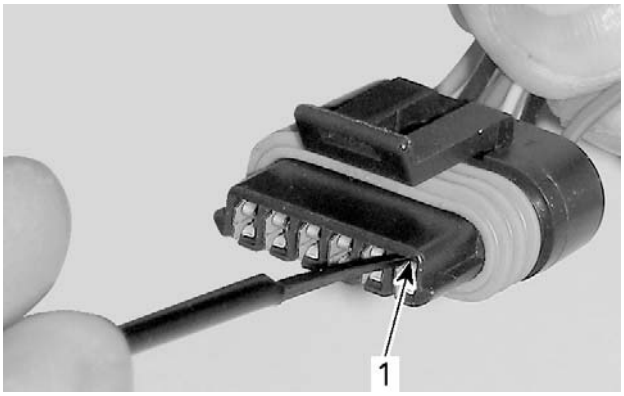

smr2009-045-014_a

*1. Unlock terminal here*

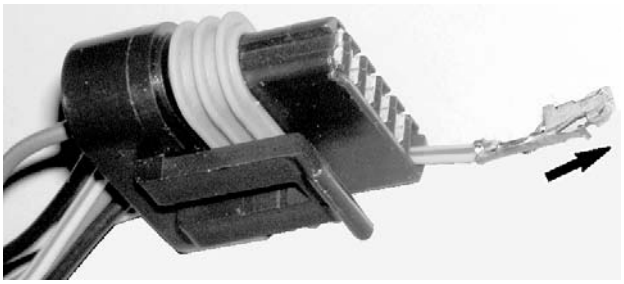
smr2009-045-015_a

**NOTICE** Before installing terminals in the connectors, ensure all terminals are properly crimped on the wires. After installation of the wire terminals in the connectors, ensure they are properly locked by gently pushing on them as if to extract them.

# DELPHI CONNECTORS

## Removing the Terminal

1. To remove a terminal from connector, first remove the locking cap.

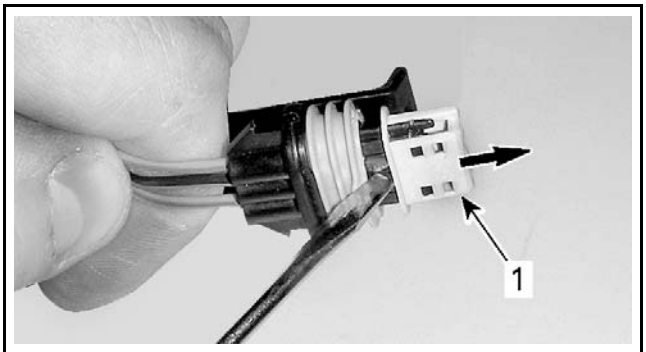

smr2009-045-023_a

*1. Pry out locking cap*

2. Carefully insert the Delphi terminal extractor in the space provided to release the pin lock.

| REQUIRED TOOL | |
|---|---|
| DELPHI TERMINAL EXTRACTOR (P/N 12094429) |  |

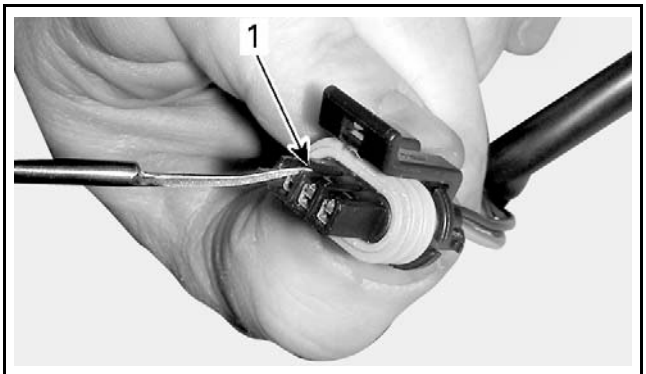

smr2009-045-024_a

*1. Unlock here*

3. Gently pull on the wire to extract the pin out the back of the connector.

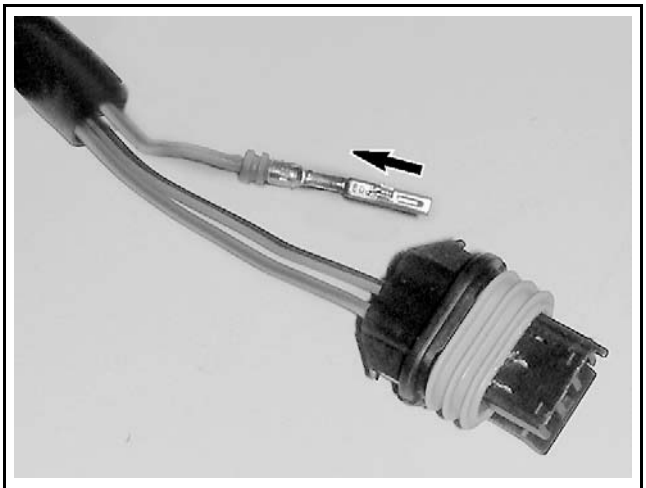
smr2009-045-028_a

***NOTICE*** Before installing terminals in the connectors, ensure all terminals are properly crimped on the wires. After installation of the wire terminals in the connectors, ensure they are properly locked by gently pushing on them as if to extract them.

# BATTERY CABLES

## Crimping the Battery Cable

Carefully strip the wire approximately to 10 mm (3/8 in) in length, using a wire stripping tool or sharp blade/knife.

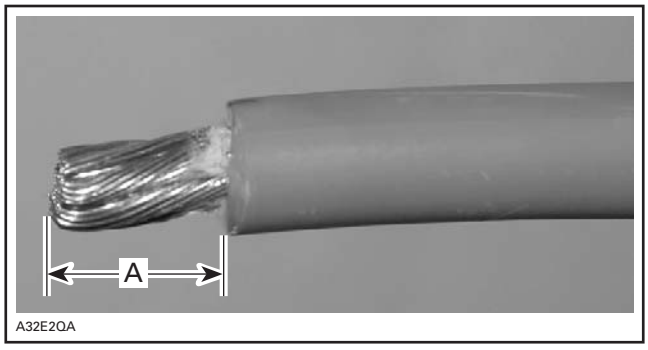

A32E2QA

*A. 10 mm (3/8 in)*

NOTE: Make sure not to cut wire strands while stripping the wire.

Install the appropriate terminal on the wire according to the requirement. Refer to appropriate *PARTS CATALOG*.

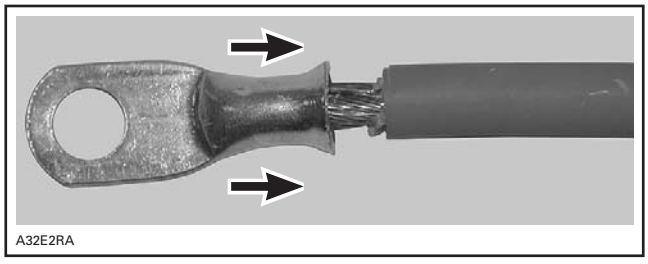
A32E2RA

*INSTALLATION OF TERMINAL*

Follow the instructions provided with the crimping tool to select the proper position of the tool.

NOTE: Different wires require different crimping pliers settings, so make sure to follow the instruction supplied with the tool.

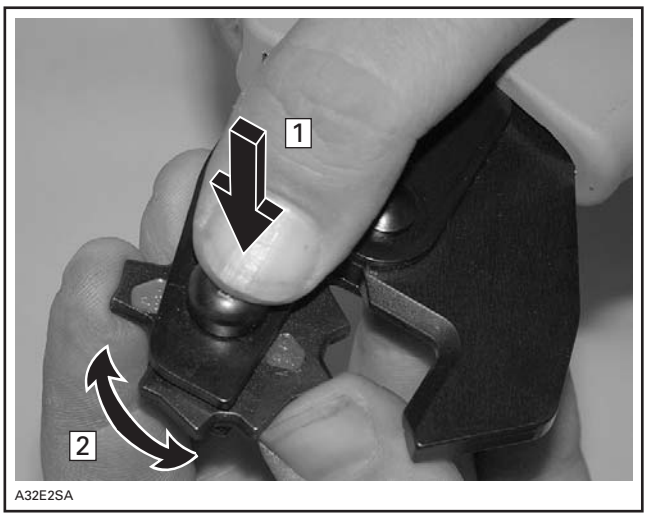

A32E2SA

*POSITIONING THE CRIMPING PLIERS*
*Step 1: Press*
*Step 2: Rotate*

After positioning the crimping pliers, crimp the terminal already installed on wire.

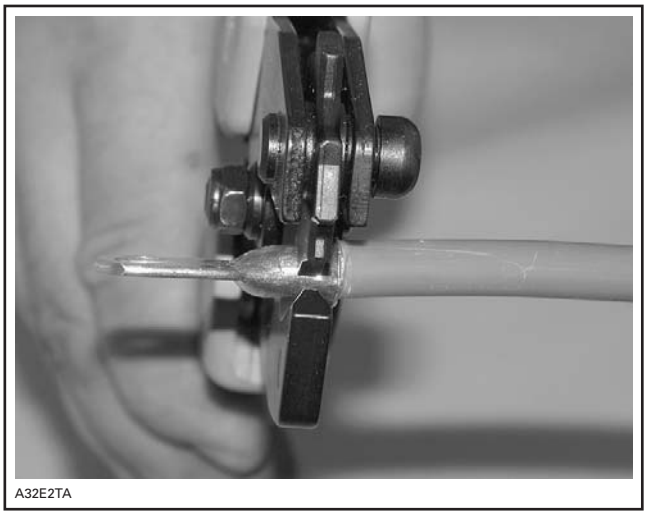
A32E2TA

*CRIMPING OF WIRE*

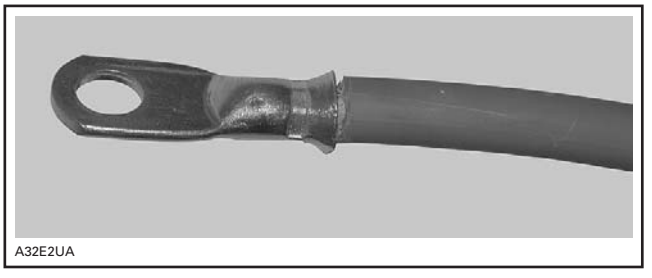
A32E2UA

*PROPERLY CRIMPED WIRE*

To verify, if the wire is properly crimped, apply some pulling force on wire and the terminal at the same time from both directions.

**NOTICE** Never weld the wire to the terminal. Welding can change the property of the wire and it can become brittle and break.

Install the protective heat shrink rubber tube on the terminal. Heat the heat shrink rubber tube using the heat gun so that it grasps the wire and the terminal.

**NOTICE** Make sure that the protective heat shrink rubber tube has been properly installed and no part of wire is exposed.

# SPLICES REPAIR PROCEDURE

## CASE 1: Wire Detached from Splice

**NOTICE** Repairs described in this section should never be performed on harness sections that can be exposed to water.

1. Locate splice. Refer to splices location diagrams.
2. Remove wires from protector tube.
3. Locate the shrink tube protecting the defective splice.

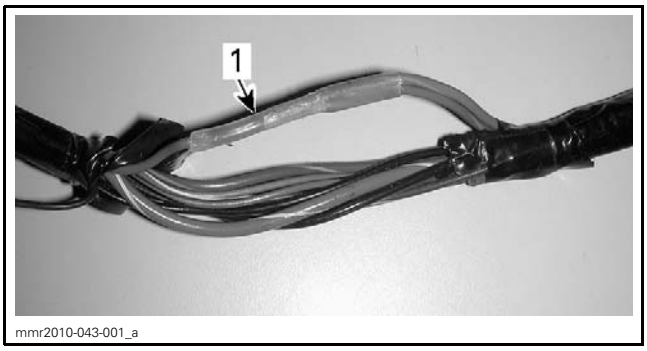

mmr2010-043-001_a

*1. Shrink tube*

4. Remove the shrink tube.
   4.1 Using a blade, cut the shrink tube.


mmr2010-043-002

**NOTICE** Be careful with the blade to avoid cutting wires insulation.

   4.2 Slightly heat the shrink tube using a heat gun.

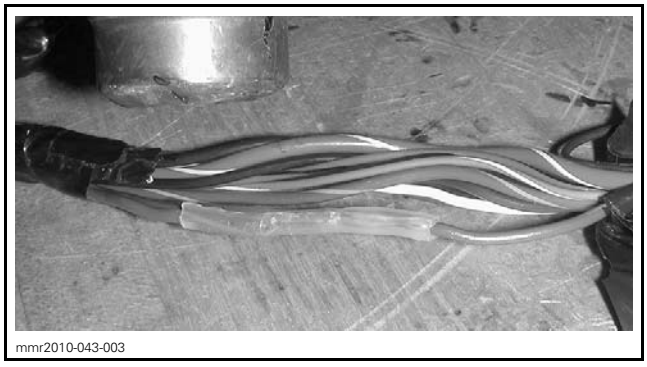
mmr2010-043-003

   4.3 Remove the shrink tube with long nose pliers.

5. Locate detached wire from splice.

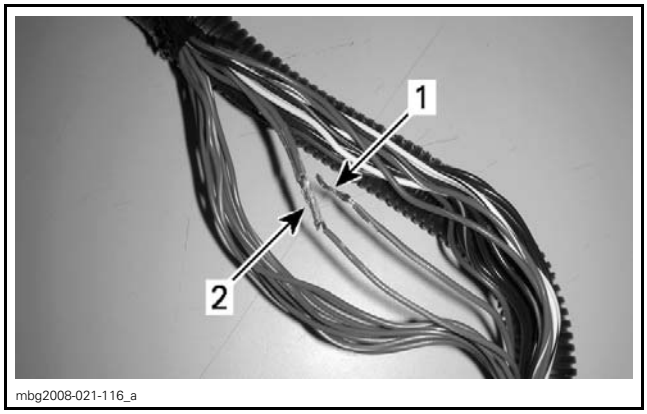

mbg2008-021-116_a

*1. Detached wire*
*2. Splice*

6. Twist detached wire around splice.

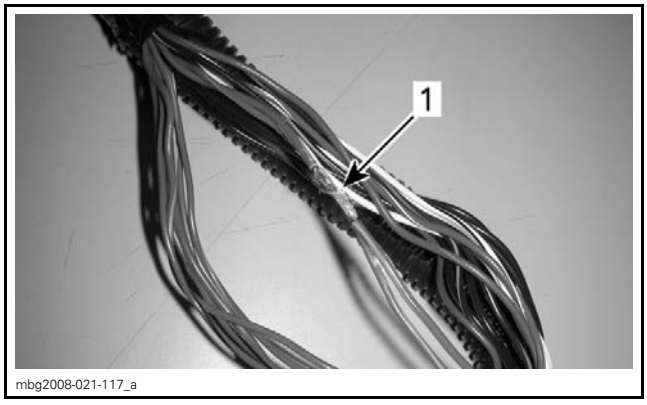

mbg2008-021-117_a

*1. Twisted wire*

7. Perform a tin solder on twisted wire.
8. Apply electrical tape to cover splice.

NOTE: Make sure tape overlaps on wire insulation, approximately 13 mm (1/2 in) each side.

9. Reinstall wires into protector tube.

## CASE 2: Wire Broken from Splice

**NOTICE** Repairs described in this section should never be performed on harness sections that can be exposed to water.

1. Locate splice. Refer to splices location diagrams.
2. Remove wires from protector tube.
3. Locate the shrink tube protecting the defective splice.

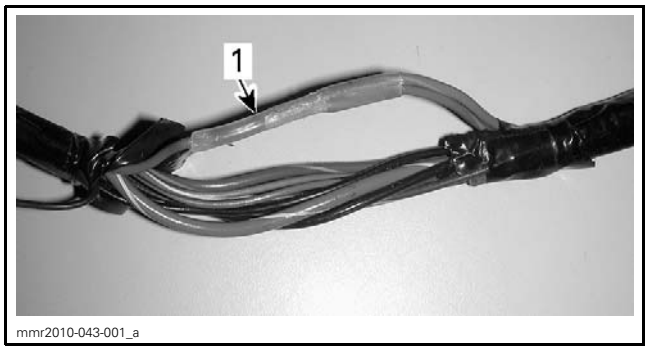


*1. Shrink tube*

4. Remove the shrink tube.
   4.1 Using a blade, cut the shrink tube.




**NOTICE** Be careful with the blade to avoid cutting wires insulation.

   4.2 Slightly heat the shrink tube using a heat gun.

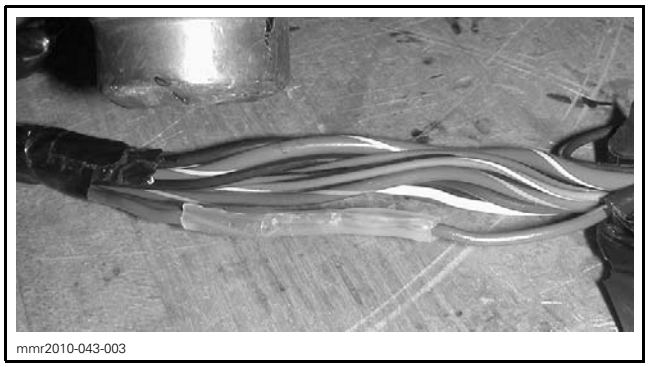


   4.3 Remove the shrink tube with long nose pliers.

5. Locate broken wire from splice.

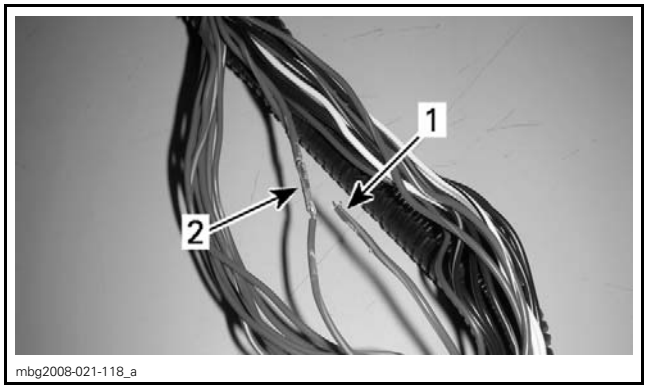


*1. Broken wire*
*2. Splice*

6. Strip wire insulation at the end of broken wire.
7. Strip wire insulation below the splice.

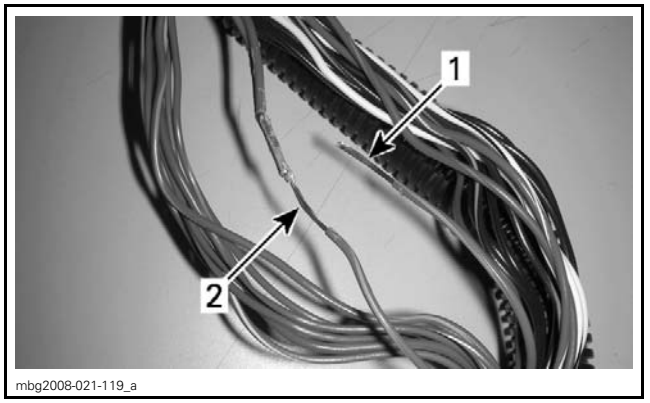


*1. Broken wire stripped*
*2. Splice wire stripped*

8. Twist wire around stripped wire.

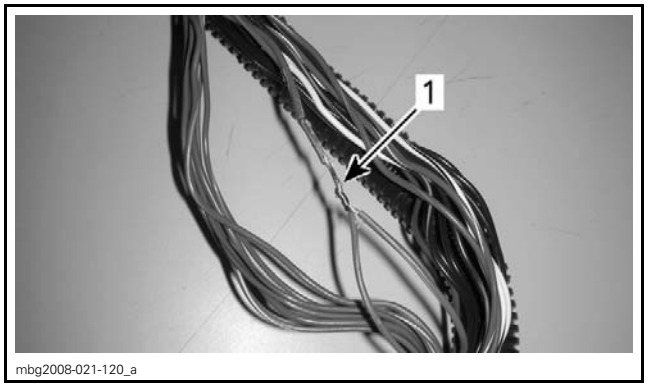


*1. Twisted wire*

9. Perform a tin solder on twisted wire.
10. Apply electrical tape to cover splice.

NOTE: Make sure tape overlaps on wire insulation, approximately 13 mm (1/2 in) each side.

11. Reinstall wires into protector tube.

NOTE: Always perform a solder on a bigger wire (lower gage).

# WIRING HARNESS AND CONNECTORS (ACE)

## SERVICE TOOLS


| Description | Part Number | Page |
|---|---|---|
| ECM ADAPTER TOOL | 529 036 166 | 218 |
| ECM TERMINAL REMOVER 2.25 | 529 036 175 | 218 |
| ECM TERMINAL REMOVER 3.36 | 529 036 174 | 218 |


## SERVICE TOOLS – OTHER SUPPLIER


| Description | Part Number | Page |
|---|---|---|
| DELPHI TERMINAL EXTRACTOR | 12094429 | 220–221 |
| FCI TERMINAL EXTRACTOR TOOL | 54241678 | 219–220 |
| MOLEX 150 TERMINAL EXTRACTOR TOOL | 63813 - 1500 | 219–220 |

NOTE: Vehicles may not be equipped with all connectors shown in illustrations.

## MAIN HARNESS

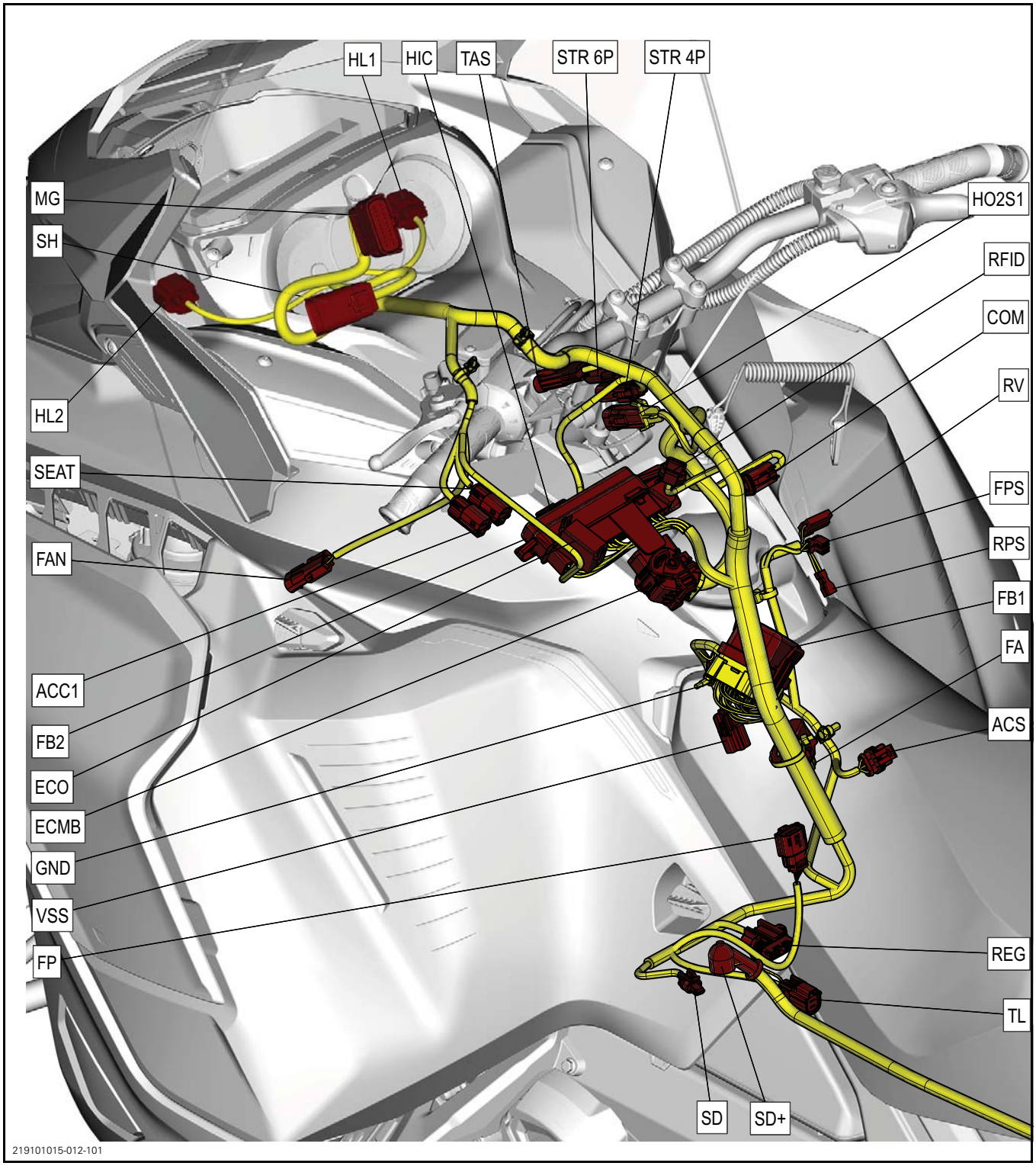

# SECONDARY HARNESS - VISOR AND SEAT

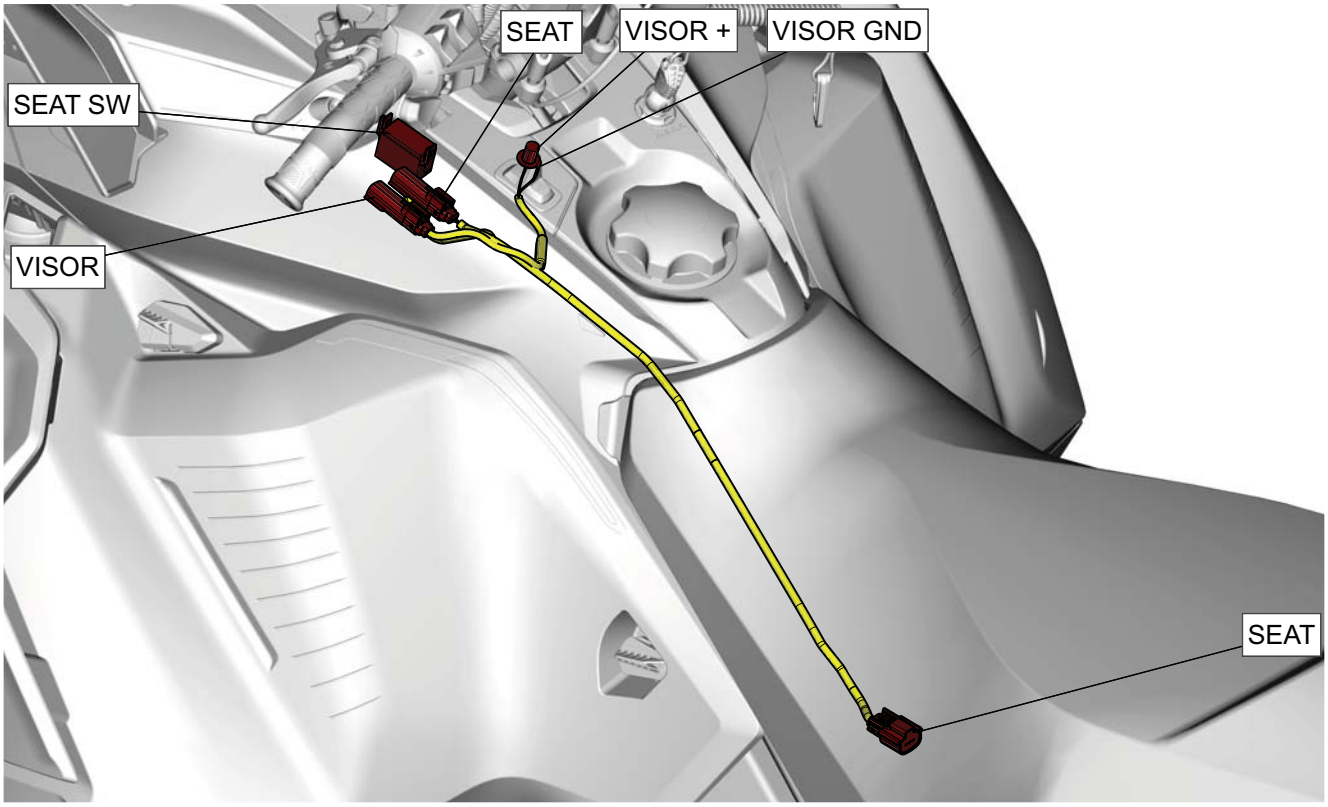

# SECONDARY HARNESS - TAILLIGHT AND BATTERY

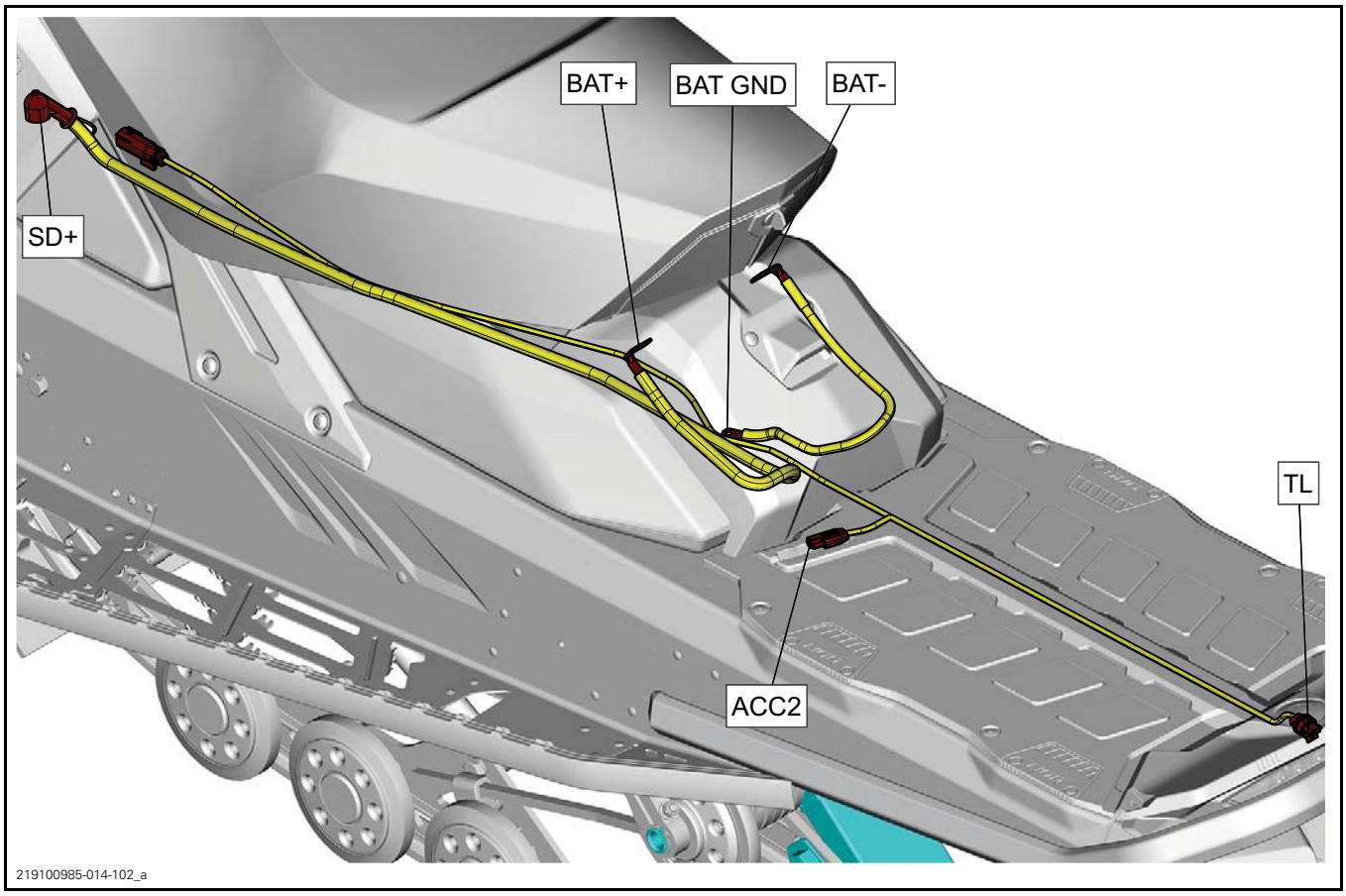

# ENGINE HARNESS

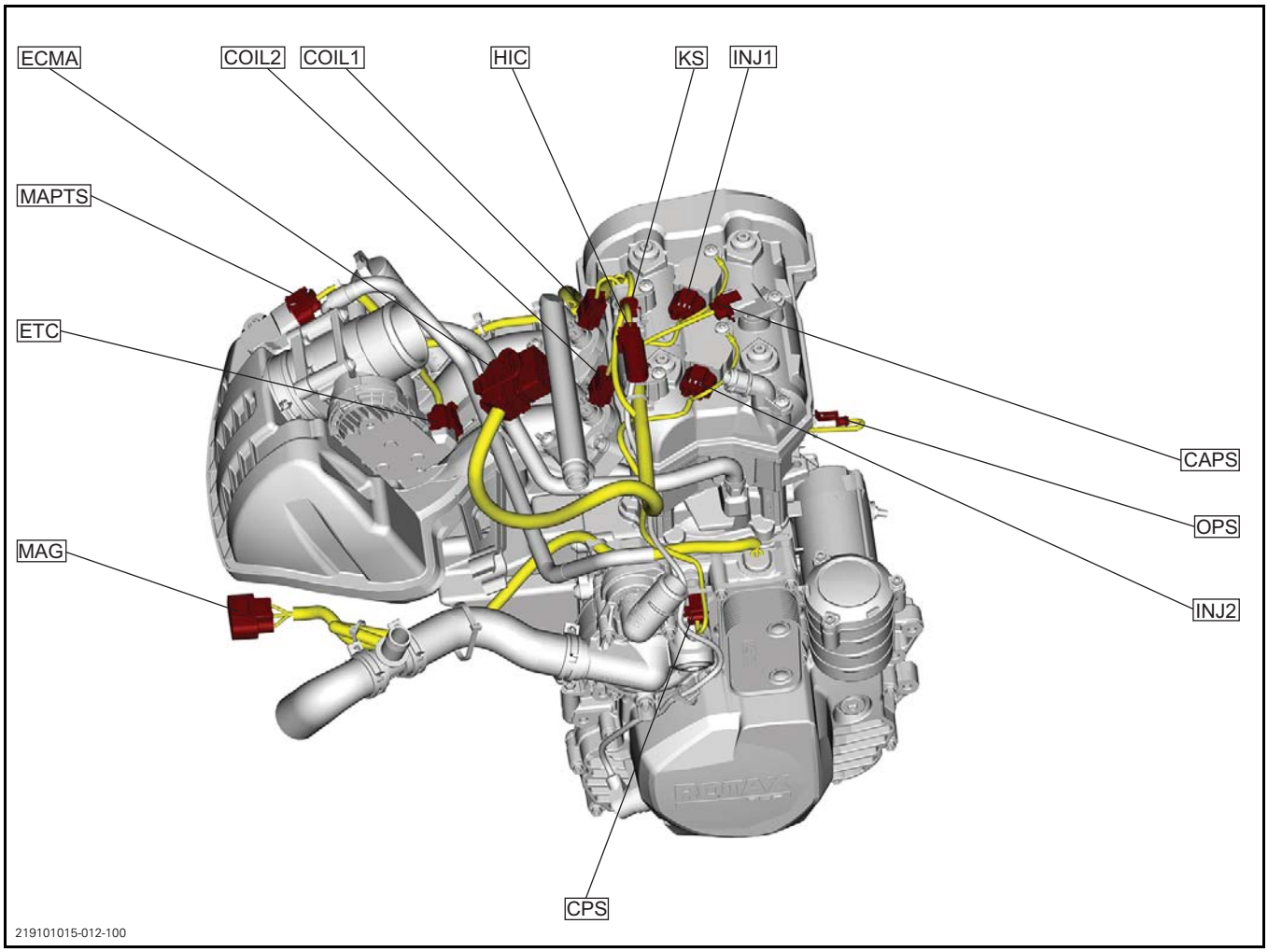

# GENERAL

## ACRONYMS

| ACRONYM | DESCRIPTION | ACRONYM | DESCRIPTION |
|---|---|---|---|
| ACC | Accessory | HL | HeadLamp |
| ACS | Air Controlled Suspension | HO2S1 | Oxygen Sensor |
| BAT | Battery | INJ | Injector |
| BAT GND | Battery ground | KS | Knock Sensor |
| CAPS | Camshaft Position Sensor | MAG | Magneto |
| COM | Communication | MAPTS | Manifold Air Pressure and Temperature Sensor |
| COIL | Coil | MG | Multifunction Gauge |
| CPS | Crankshaft Position Sensor | OPS | Oil Pressure Sensor |
| ECMA | ECM connector A (Engine harness) | REG | Voltage Regulator |
| ECMB | ECM connector B (Chassis harness) | RFID | Radio Frequency Identification |
| ECO | Riding mode switch | RPS | Reverse Position Switch |
| ETC | Electronic Throttle Control | RV | Electric Reverse Motor |
| FA | Main fuse | SD | Starter Solenoid |
| FAN | Radiator fan | SEAT SW | Heated seat switch |
| FB | Fusebox | SH | Switch Housing |
| FP | Fuel Pump | STR | Steering Connector |
| FPS | Forward Position Switch | TAS | Throttle Actuator Sensor |
| GND | Ground | TL | Tail Light |
| HIC | Harness interconnect | VSS | Vehicle Speed Sensor |

# PROCEDURES

**⚠ WARNING**

When disassembling any connector for repair or replacement on the vehicle, always disconnect the battery to ensure all electrical power is removed and prevent any possibility of a short circuit. Refer to *CHARGING SYSTEM* subsection.

## DIAGNOSTIC CONNECTOR (DEUTSCH)

### Disassembling and Reassembling the Connector

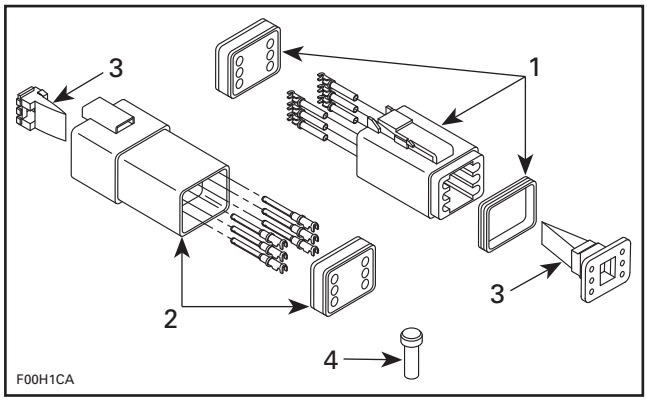


*TYPICAL - DEUTSCH CONNECTOR*
1. *Male connector*
2. *Female connector*
3. *Secondary lock*
4. *Sealing cap*

***NOTICE*** Do not apply dielectric grease on terminal inside connector.

To remove terminals from connector, proceed as follows:

1. Using long nose pliers, pull out the plastic lock from between the terminals.

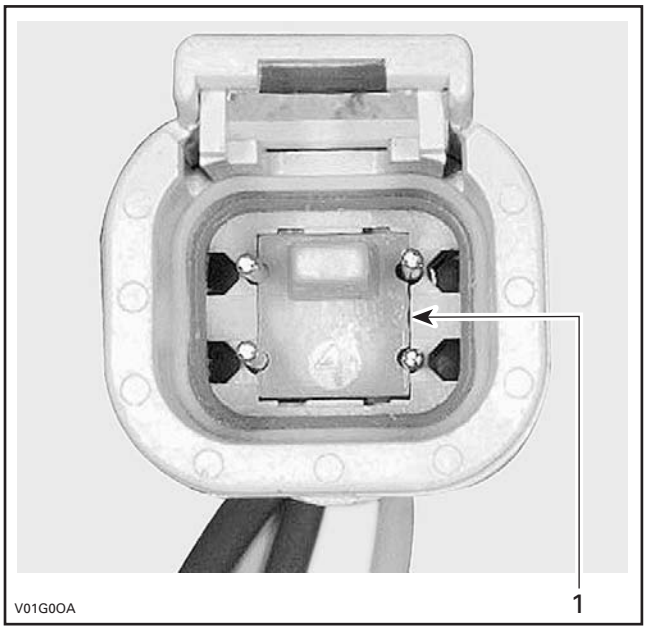


*TYPICAL - MALE CONNECTOR*
1. *Female lock*

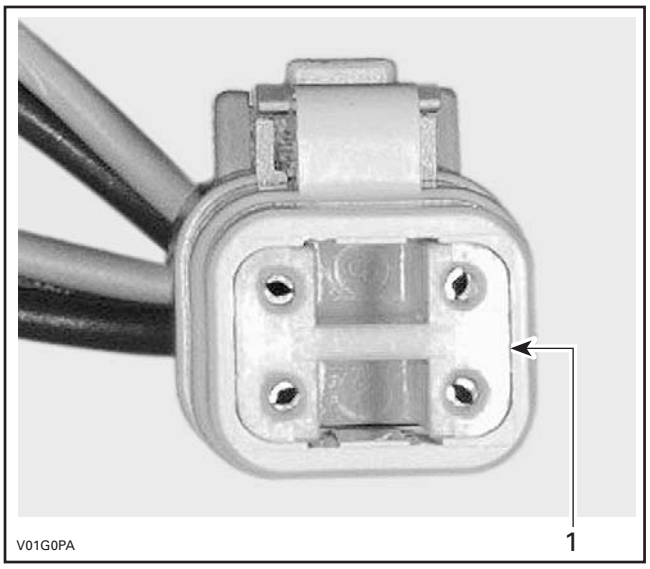


*TYPICAL - FEMALE CONNECTOR*
1. *Male lock*

NOTE: Before pin extraction, push wire forward to relieve pressure on retaining tab.

2. Insert a 4.8 mm (.189 in) wide screwdriver blade inside the front of the terminal cavity.
3. Pry the retaining tab away from the terminal while gently pulling the wire and terminal out of the back of the connector.

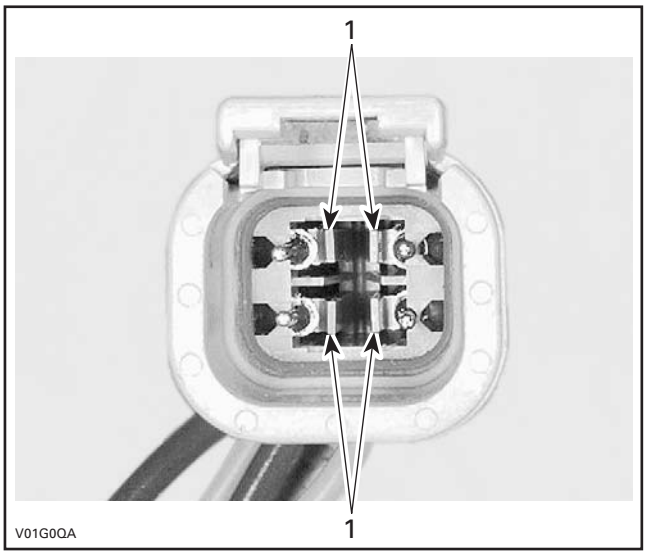


*TYPICAL - MALE CONNECTOR*
*1. Retaining tabs*

To install:

1. For insertion of a terminal, ensure the plastic lock is removed.
2. Insert terminal through the back of the connector in the appropriate position, and push it in as far as it will go. You should feel or hear the terminal lock engage.
3. Pull back on the terminal wire to ensure the retention fingers are holding the terminal.
4. After all required terminals have been inserted, the lock must be installed.

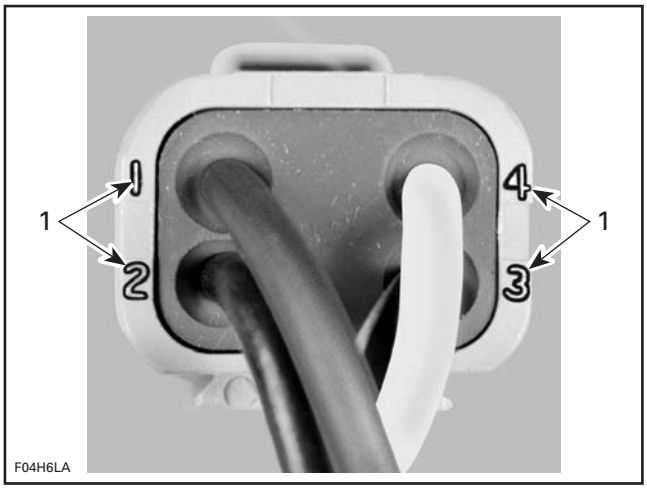


*TYPICAL - CONNECTOR PIN-OUT*
*1. Terminal position identification numbers*

# ECM CONNECTOR (MOLEX)

There are 2 connectors on the ECM.

The engine wiring harness connector is connected to ECM connector "A". The vehicle wiring harness connector is connected to ECM connector "B".

Each ECM connector has 48 pins. However, connectors "A" and "B" are not interchangeable due to their specific keyways.

## Removing the Connector

1. To access the ECM, refer to *ELECTRONIC FUEL INJECTION (EFI)* subsection.
2. Press **and hold** the locking tab on the connector to be disconnected.

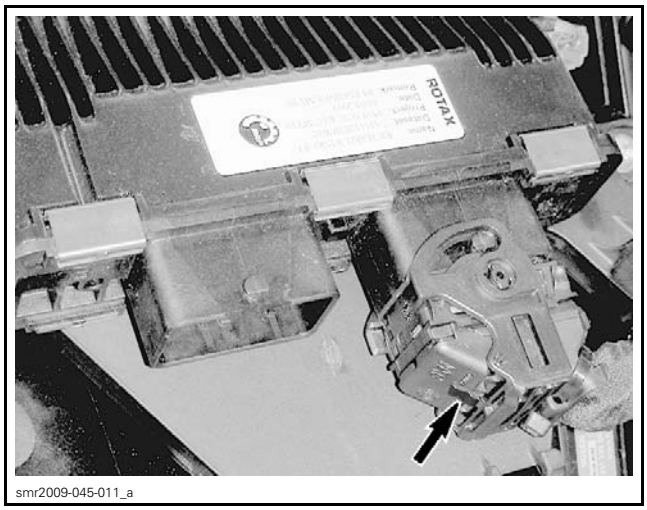


*LOCKING TAB TO PRESS AND HOLD*

3. As you hold the locking tab, rotate the connector locking cam until it stops.

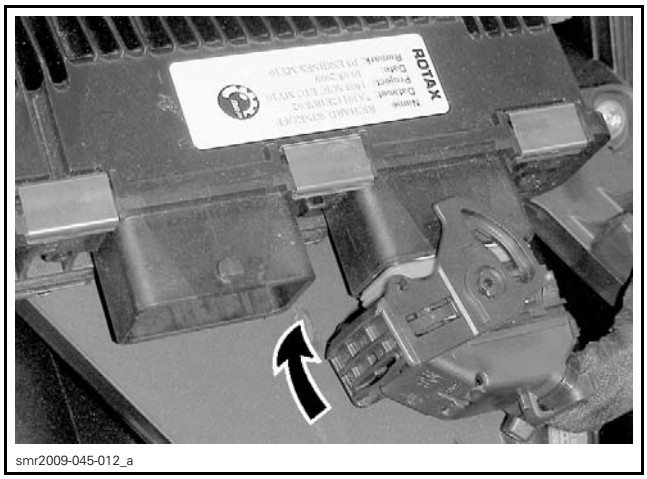


*CONNECTOR LOCKING CAM ROTATION TO RELEASE*

4. Pull connector off ECM.



smr2009-045-013_a

## Installing the Connector

1. Fully open connector locking cam.

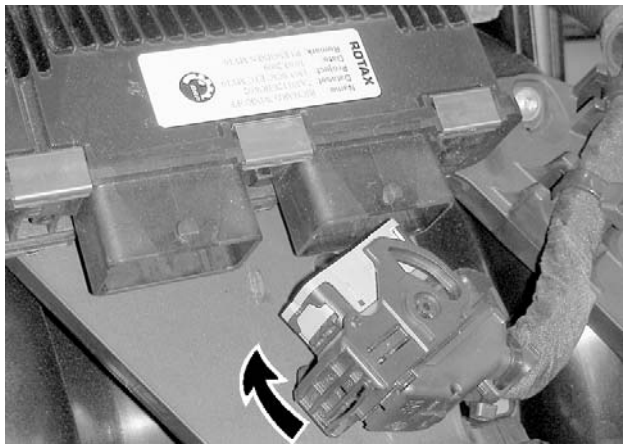

smr2009-045-013_b

*CONNECTOR LOCKING CAM IN RELEASE POSITION*

2. Insert connector on ECM.
3. As you push the connector onto the ECM, rotate the connector locking cam until it snaps locked.

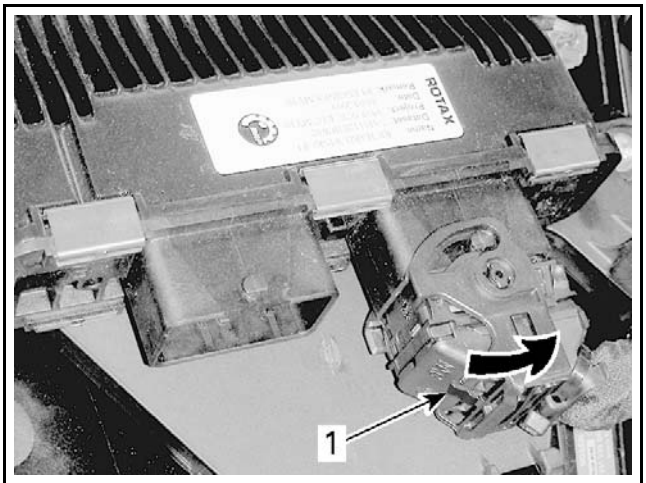

smr2009-045-011_b

*1. Locked here*

4. Ensure the locking tab is fully out.

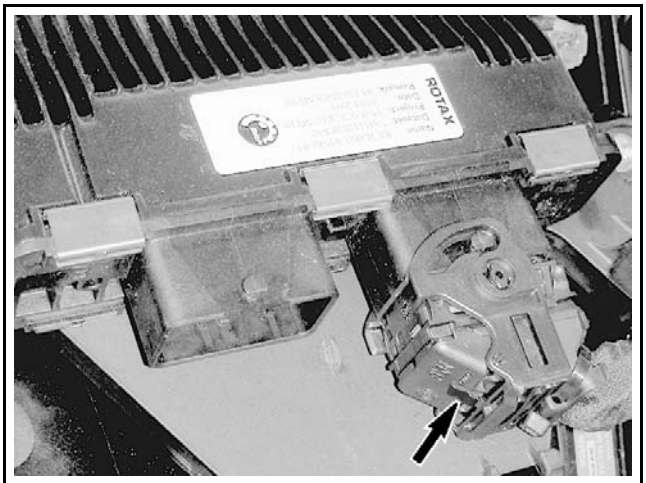

smr2009-045-011_a

*LOCKING TAB FULLY OUT*

## Inspecting the Connector

Before replacing an ECM, always check electrical connections.

1. Ensure connector locking mechanism is functioning properly.
2. Ensure all wire terminals (pins) are properly locked in the connector.
3. Ensure they are very tight, make good contact with the pins in the ECM.
4. Ensure the pins in the harness connector and the ECM connector are clean, shiny and corrosion-free.

NOTE: A "defective ECM module" could possibly be repaired simply by disconnecting and reconnecting it.

**NOTICE** **Do not apply any lubricant product to the pins of the ECM connector.**

## Probing the Connector

The most recommended and safest method to probe the MOLEX (ECM) connector terminals is to use the ECM adapter tool. This tool will prevent deforming or enlarging of the terminals, which would lead to bad ECM terminal contact creating intermittent or permanent problems.

| REQUIRED TOOL | |
|---|---|
| ECM ADAPTER TOOL (P/N 529 036 166) |  |

1. Disconnect the ECM connector to be probed, and reconnect it on the ECM adapter.
2. Probe wire terminals of the circuit to be tested directly in the adapter holes.

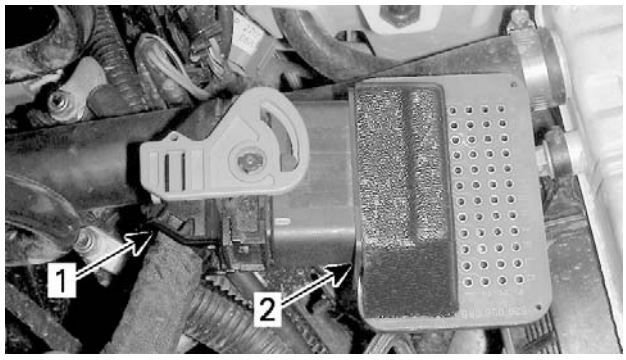

vmr2008-139-016_a

*TYPICAL*
*1. ECM connector*
*2. ECM adapter*

**NOTICE** Never probe directly on the ECM harness connector. This could change the shape or enlarge the terminals and create intermittent or permanent contact problems.

## Removing the Connector Terminal (Harness Connector)

To remove a signal terminal from the ECM harness connector, use the ECM terminal remover 2.25.

To remove a power terminal, use the ECM terminal remover 3.36.

| REQUIRED TOOL | |
|---|---|
| ECM TERMINAL REMOVER 2.25 (P/N 529 036 175) |  |
| ECM TERMINAL REMOVER 3.36 (P/N 529 036 174) |  |

1. Remove rear protector from connector.
2. Pull out the connector lock.

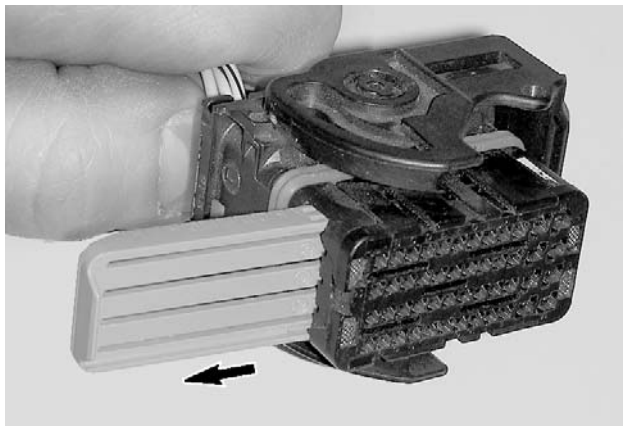
smr2009-045-025_a

3. Insert tool to unlock terminal.

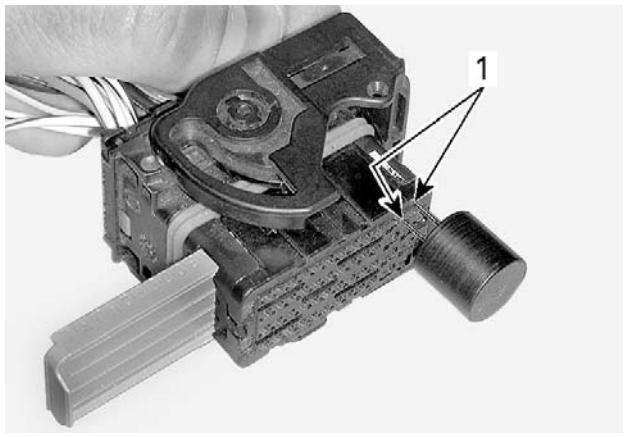

smr2009-045-026_a

*1. Unlock here*

4. Gently pull on the wire to extract the terminal out the back of the connector.

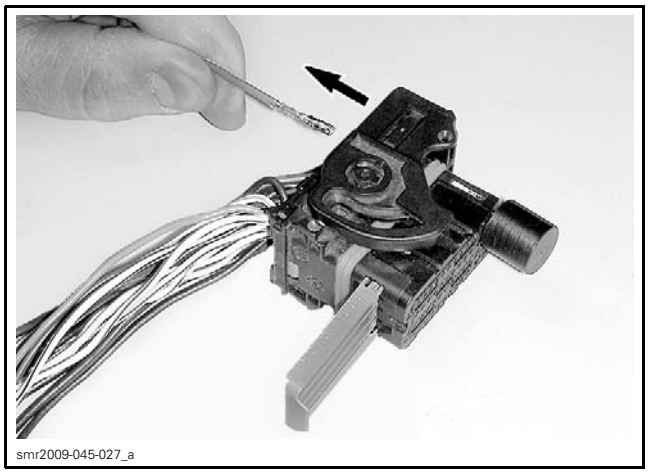
smr2009-045-027_a

**NOTICE** Before installing wire terminals in the connector, ensure all terminals are properly crimped on wires. After installation of wire terminals in the connectors, ensure they are properly locked by gently pulling on them as if to extract them.

# MOLEX CONNECTORS (EXCEPT ECM)

## Extracting a Terminal (Female Connector)

The same procedure must be done to remove a seal plug.

1. Insert a small flat screwdriver in the pry holes of the terminal locator, on the terminal side of the connector.

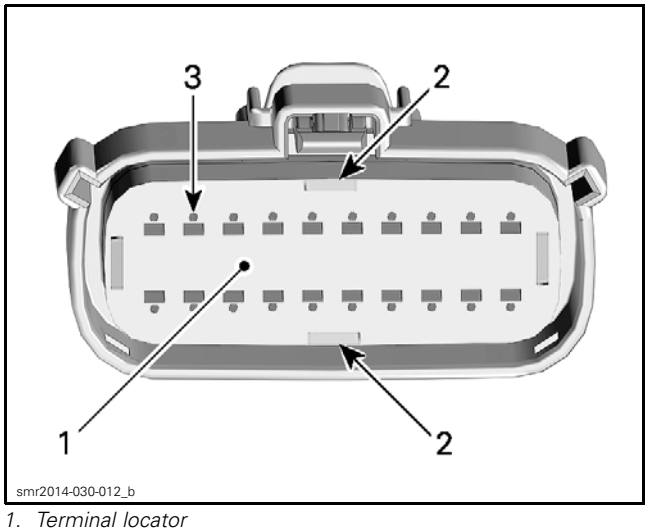

smr2014-030-012_b

*1. Terminal locator*
*2. Pry holes*
*3. Holes for inserting terminal extractor tool*

2. Apply slight pressure and pry the terminal locator out until it clicks (± 4 mm (.16 in)).

NOTE: Do not remove the terminal locator from the connector housing.

3. Insert the extractor tool in the small hole adjacent to the terminal.

NOTE: Push the extractor tool in only as far as required to release the lock from the terminal. The tool should slide along the terminal and be inserted between the connector housing and the terminal lock.

| REQUIRED TOOL | |
|---|---|
| FCI TERMINAL EXTRACTOR TOOL (P/N 54241678) |  |
| **or,** | |
| MOLEX 150 TERMINAL EXTRACTOR TOOL (P/N 63813 - 1500) |  |

4. Gently pull on the wire to extract the terminal out the back of the connector.

## Extracting the Terminal (Male Connector)

The same procedure must be done to remove a seal plug.

1. Using a pair of thin long nose pliers, pull the terminal locator (the white plastic insert in the connector) out to the detent position (± 13 mm (1/2 in) between terminal locator and connector housing face). This will allow unlocking of the pins.

**NOTICE** Do not attempt to remove the terminal locator or damage will occur. Be careful not to bend the pins when using the pliers.

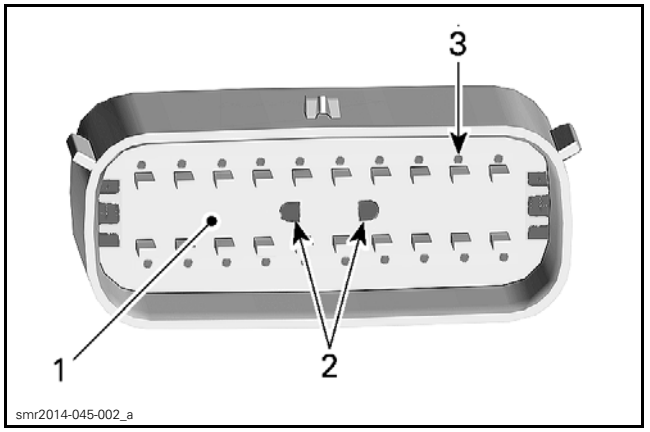

smr2014-045-002_a

*1. Terminal locator*
*2. Insert long nose pliers here*
*3. Holes for inserting terminal extractor tool*

2. Insert the extractor tool in the small hole adjacent to the terminal.

NOTE: Push the extractor tool in only as far as required to release the lock from the terminal. The tool should slide along the terminal and be inserted between the connector housing and the terminal lock.

| REQUIRED TOOL | |
|---|---|
| FCI TERMINAL EXTRACTOR TOOL (P/N 54241678) |  |
| **or,** | |
| MOLEX 150 TERMINAL EXTRACTOR TOOL (P/N 63813 - 1500) |  |

3. Gently pull on the wire to extract the terminal out the back of the connector.

## Inserting the Terminal

1. Ensure the terminal is properly crimped onto the wire.
2. Ensure the terminal locator (the white plastic insert in the connector) is out in the detent position.
3. Orient the key on the back of the male terminal with the keyway on the rear of the housing

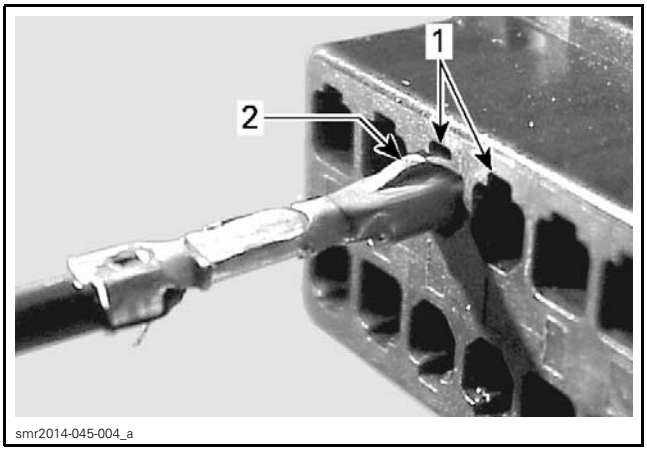

smr2014-045-004_a

*TYPICAL - PIN INSERTION*
*1. Keyway*
*2. Terminal key*

4. Push the terminal into the housing until it clicks.
5. Gently pull on the terminal to ensure it is properly locked.
6. Repeat previous steps for each terminal to be inserted.
7. Push the terminal locator into the connector to the locked position.

# DELPHI/PACKARD CONNECTORS

## Removing the Connector Terminal

To remove a terminal (pin) from the connector, use a special tool such as the Delphi terminal extractor.

| REQUIRED TOOL | |
|---|---|
| DELPHI TERMINAL EXTRACTOR (P/N 12094429) |  |

NOTE: Grinding the tool end to a taper is required.

1. Carefully insert the tool in the space provided to release the pin lock.
2. Push the pin out the front of the connector by pushing on the wire.

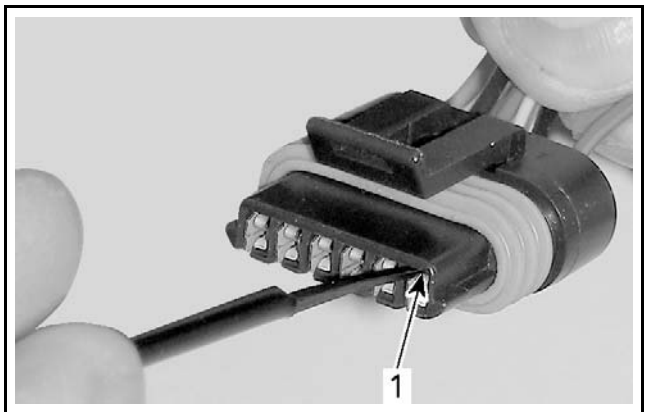

smr2009-045-014_a

*1. Unlock terminal here*

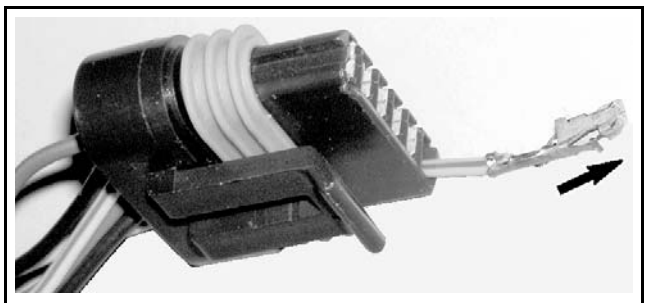
smr2009-045-015_a

**NOTICE** Before installing terminals in the connectors, ensure all terminals are properly crimped on the wires. After installation of the wire terminals in the connectors, ensure they are properly locked by gently pushing on them as if to extract them.

# DELPHI CONNECTORS

## Removing the Terminal

1. To remove a terminal from connector, first remove the locking cap.

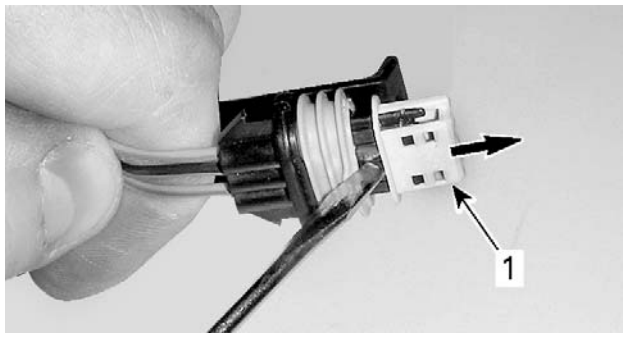

smr2009-045-023_a

*1. Pry out locking cap*

2. Carefully insert the Delphi terminal extractor in the space provided to release the pin lock.

| REQUIRED TOOL |
| --- |
| DELPHI TERMINAL EXTRACTOR (P/N 12094429)  |

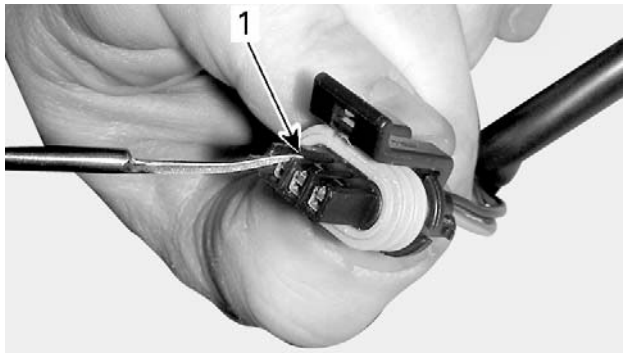

smr2009-045-024_a

*1. Unlock here*

3. Gently pull on the wire to extract the pin out the back of the connector.

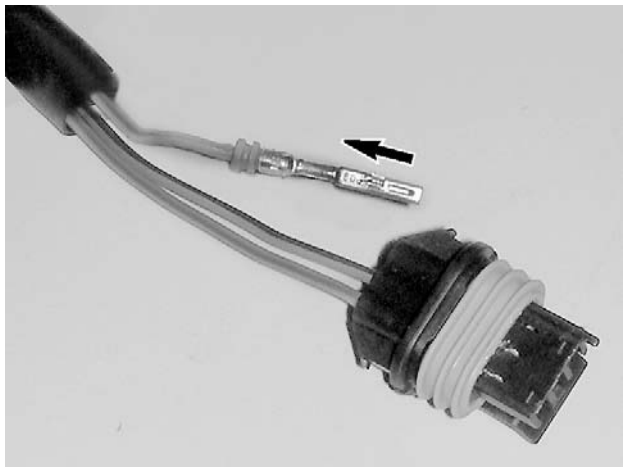
smr2009-045-028_a

***NOTICE*** Before installing terminals in the connectors, ensure all terminals are properly crimped on the wires. After installation of the wire terminals in the connectors, ensure they are properly locked by gently pushing on them as if to extract them.

# BATTERY CABLES

## Crimping the Battery Cable

Carefully strip the wire approximately to 10 mm (3/8 in) in length, using a wire stripping tool or sharp blade/knife.

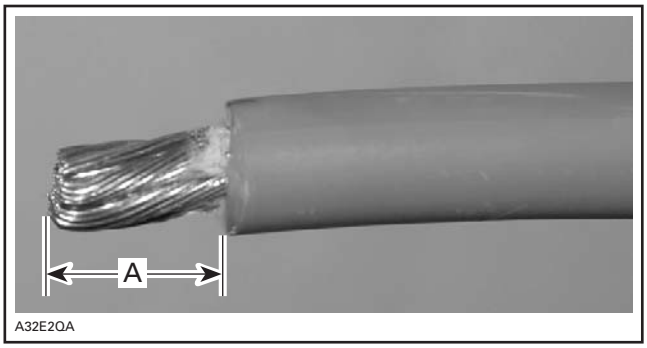

A32E2QA

*A. 10 mm (3/8 in)*

NOTE: Make sure not to cut wire strands while stripping the wire.

Install the appropriate terminal on the wire according to the requirement. Refer to appropriate *PARTS CATALOG*.

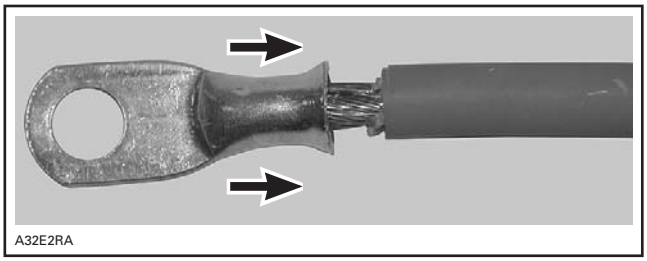
A32E2RA

*INSTALLATION OF TERMINAL*

NOTE: Different wires require different crimping pliers settings, so make sure to follow the instruction supplied with the tool.

Crimp the terminal on the wire.


A32E2TA

*CRIMPING OF WIRE*

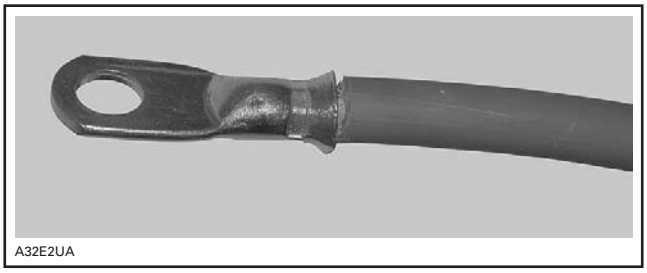
A32E2UA

*PROPERLY CRIMPED WIRE*

To verify if the wire is properly crimped, apply some pulling force on wire and the terminal at the same time from both directions.

**NOTICE** Never weld the wire to the terminal. Welding can change the property of the wire and it can become brittle and break.

Install the protective heat shrink rubber tube on the terminal. Heat the heat shrink rubber tube using the heat gun so that it grasps the wire and the terminal.

**NOTICE** Make sure that the protective heat shrink rubber tube has been properly installed and no part of wire is exposed.

## SPLICES REPAIR PROCEDURE

### CASE 1: Wire Detached from Splice

**NOTICE** Repairs described in this section should never be performed on harness sections that can be exposed to water.

1. Locate splice. Refer to splices location diagrams.
2. Remove wires from protector tube.
3. Locate the shrink tube protecting the defective splice.

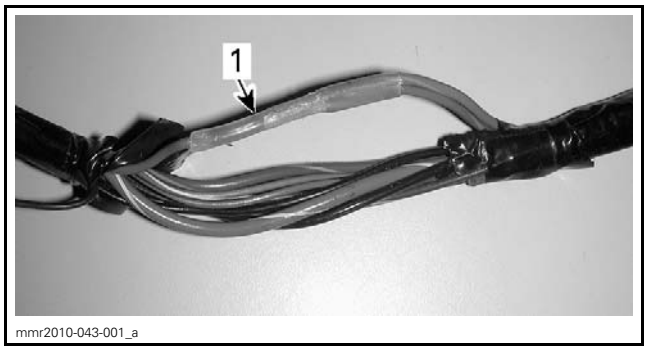

mmr2010-043-001_a

*1. Shrink tube*

4. Remove the shrink tube.
   4.1 Using a blade, cut the shrink tube.


mmr2010-043-002

**NOTICE** Be careful with the blade to avoid cutting wires insulation.

   4.2 Slightly heat the shrink tube using a heat gun.

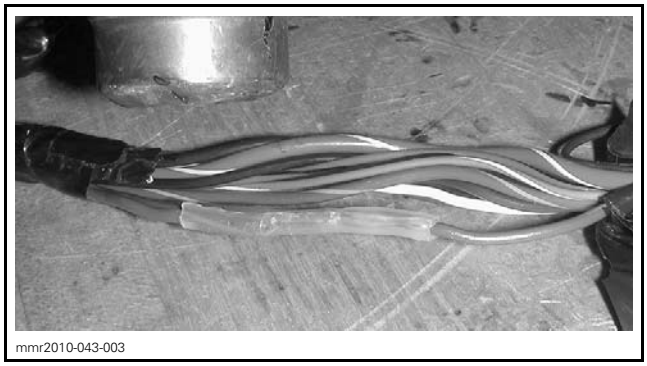
mmr2010-043-003

   4.3 Remove the shrink tube with long nose pliers.
5. Locate detached wire from splice.

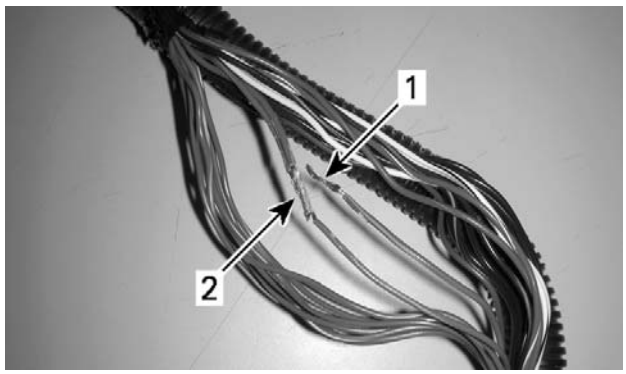


*1. Detached wire*
*2. Splice*

6. Twist detached wire around splice.

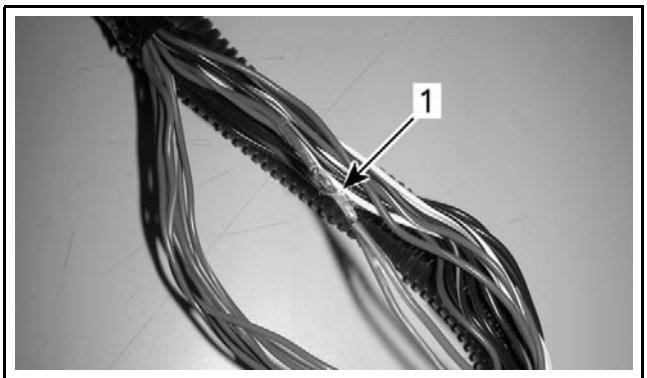


*1. Twisted wire*

7. Perform a tin solder on twisted wire.
8. Apply electrical tape to cover splice.

NOTE: Make sure tape overlaps on wire insulation, approximately 13 mm (1/2 in) each side.

9. Reinstall wires into protector tube.

## CASE 2: Wire Broken from Splice

**NOTICE** Repairs described in this section should never be performed on harness sections that can be exposed to water.

1. Locate splice. Refer to splices location diagrams.
2. Remove wires from protector tube.
3. Locate the shrink tube protecting the defective splice.

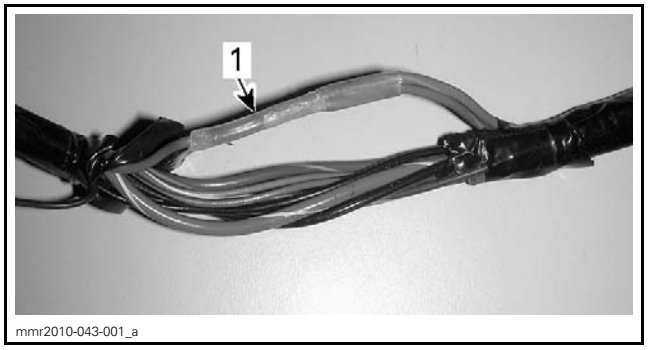


*1. Shrink tube*

4. Remove the shrink tube.
   4.1 Using a blade, cut the shrink tube.




**NOTICE** Be careful with the blade to avoid cutting wires insulation.

   4.2 Slightly heat the shrink tube using a heat gun.

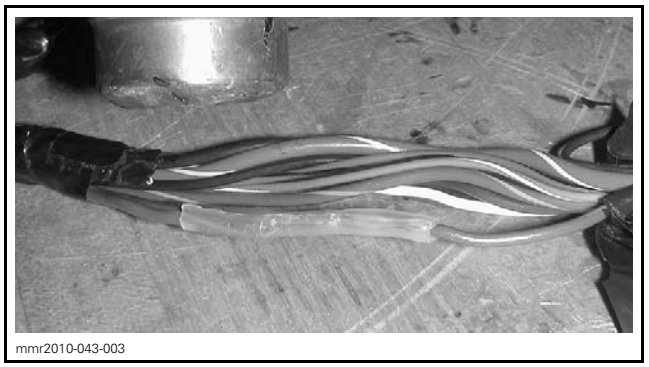


   4.3 Remove the shrink tube with long nose pliers.

5. Locate broken wire from splice.

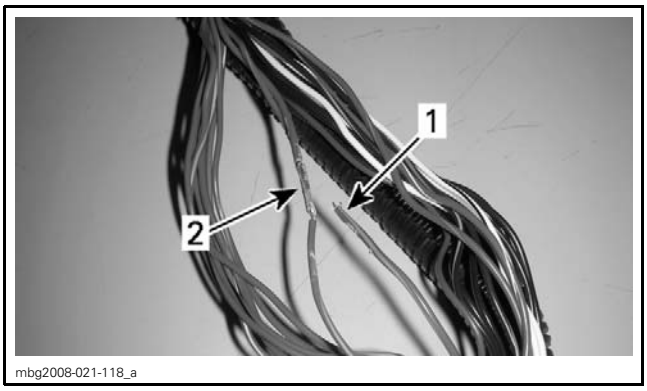


*1. Broken wire*
*2. Splice*

6. Strip wire insulation at the end of broken wire.
7. Strip wire insulation below the splice.

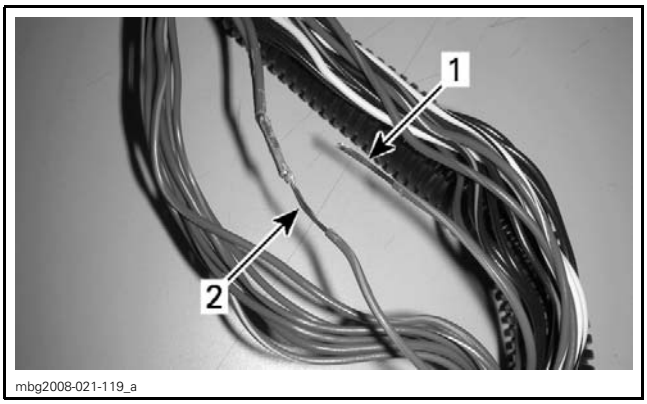


*1. Broken wire stripped*
*2. Splice wire stripped*

8. Twist wire around stripped wire.

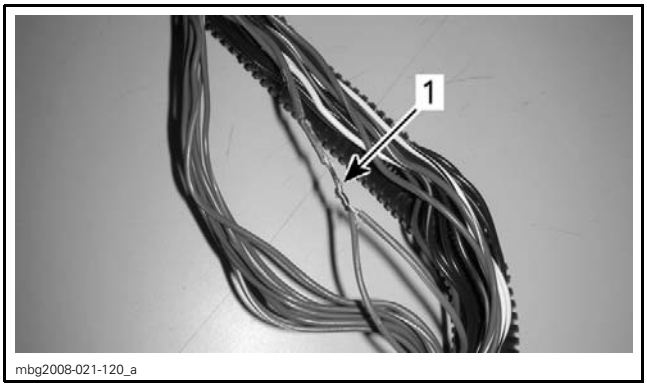


*1. Twisted wire*

9. Perform a tin solder on twisted wire.
10. Apply electrical tape to cover splice.

NOTE: Make sure tape overlaps on wire insulation, approximately 13 mm (1/2 in) each side.

11. Reinstall wires into protector tube.

NOTE: Always perform a solder on a bigger wire (lower gage).

# WIRING HARNESS AND CONNECTORS (E-TEC)

## SERVICE TOOLS

| Description | Part Number | Page |
|---|---|---|
| ECM ADAPTER TOOL | 529 036 166 | 234 |
| ECM TERMINAL REMOVER 2.25 | 529 036 175 | 234 |
| ECM TERMINAL REMOVER 3.36 | 529 036 174 | 234 |

## SERVICE TOOLS – OTHER SUPPLIER

| Description | Part Number | Page |
|---|---|---|
| DELPHI TERMINAL EXTRACTOR | 12094429 | 236–237 |
| FCI TERMINAL EXTRACTOR TOOL | 54241678 | 235–236 |
| MOLEX 150 TERMINAL EXTRACTOR TOOL | 63813 - 1500 | 235–236 |

NOTE: Vehicles may not be equipped with all connectors shown in illustrations.

## CHASSIS HARNESS - TRAIL AND CROSSOVER VEHICLES

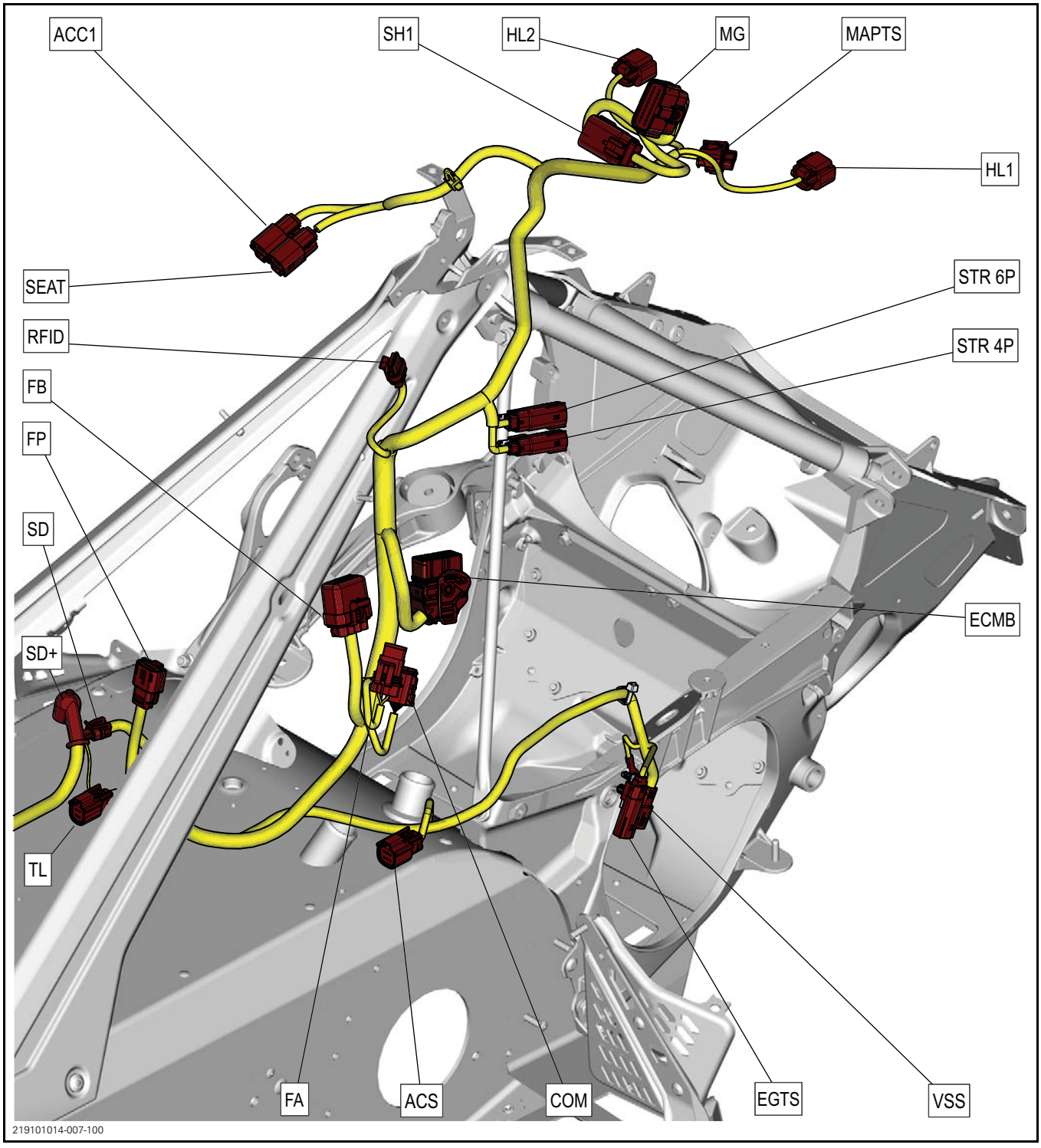

# CHASSIS HARNESS - DEEP SNOW VEHICLES

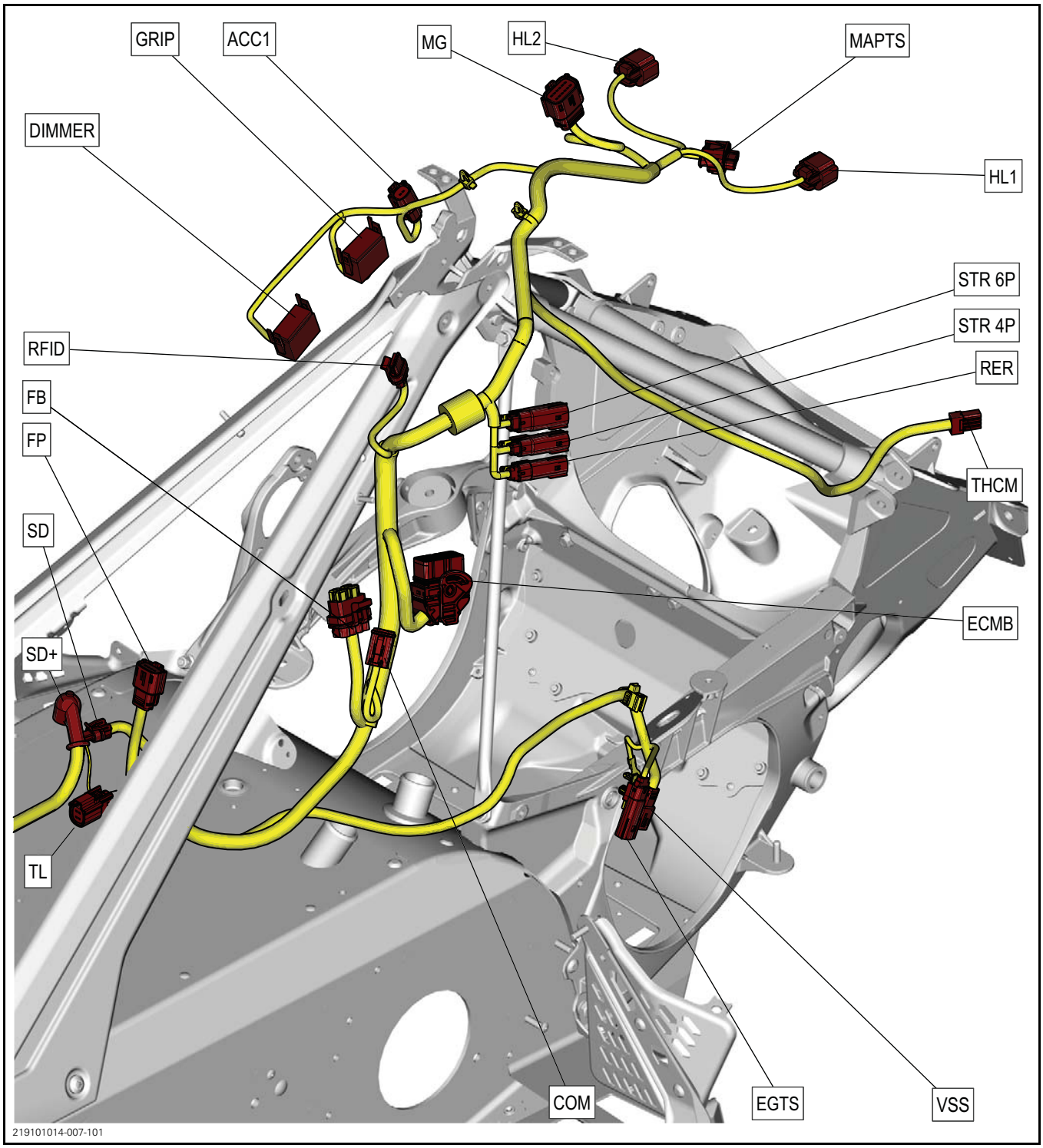

# CHASSIS HARNESS - UTILITY VEHICLES

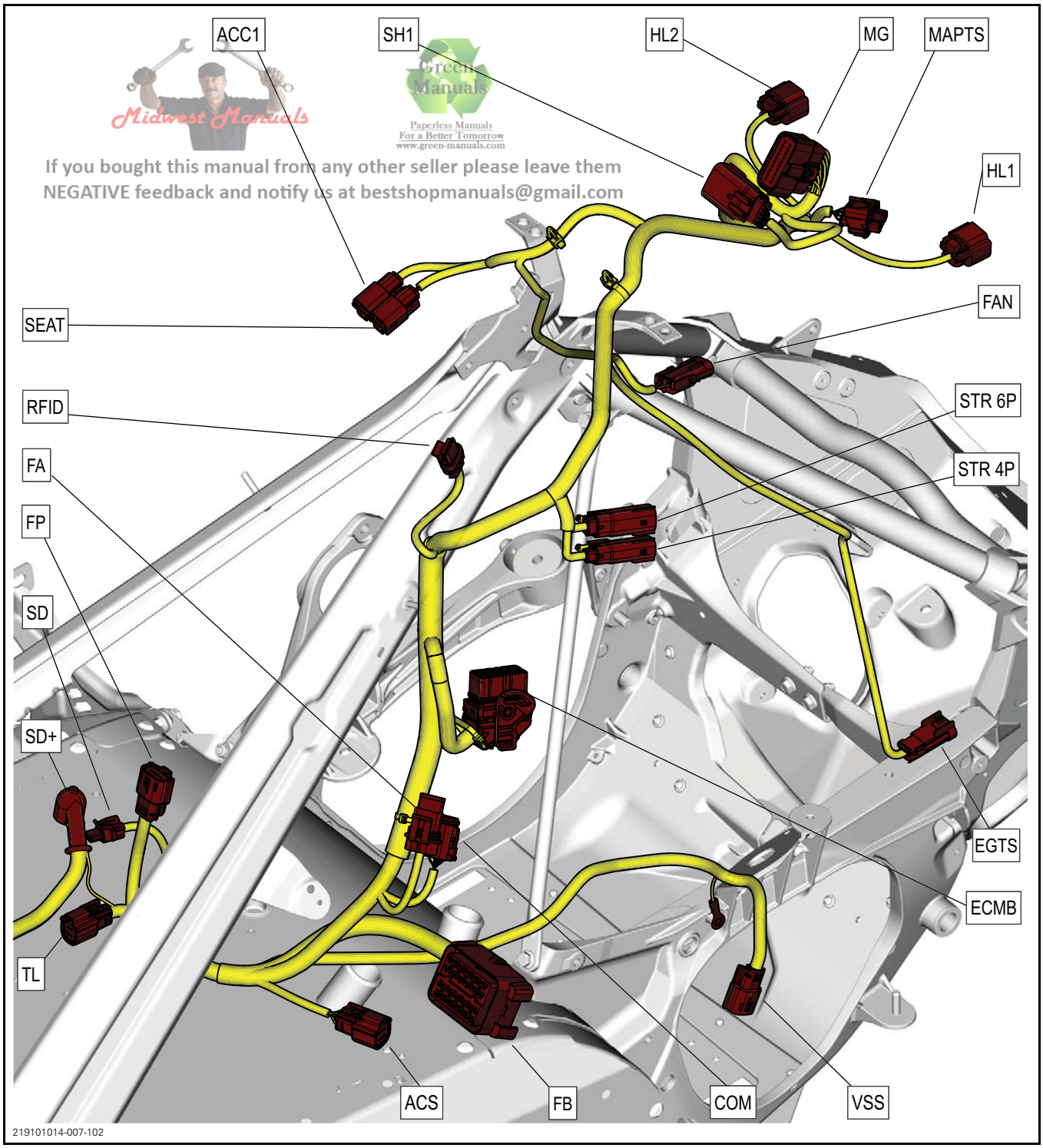


Midwest Manuals
Green Manuals
Paperless Manuals
For a Better Tomorrow
www.green-manuals.com
If you bought this manual from any other seller please leave them
NEGATIVE feedback and notify us at bestshopmanuals@gmail.com

# ENGINE HARNESS

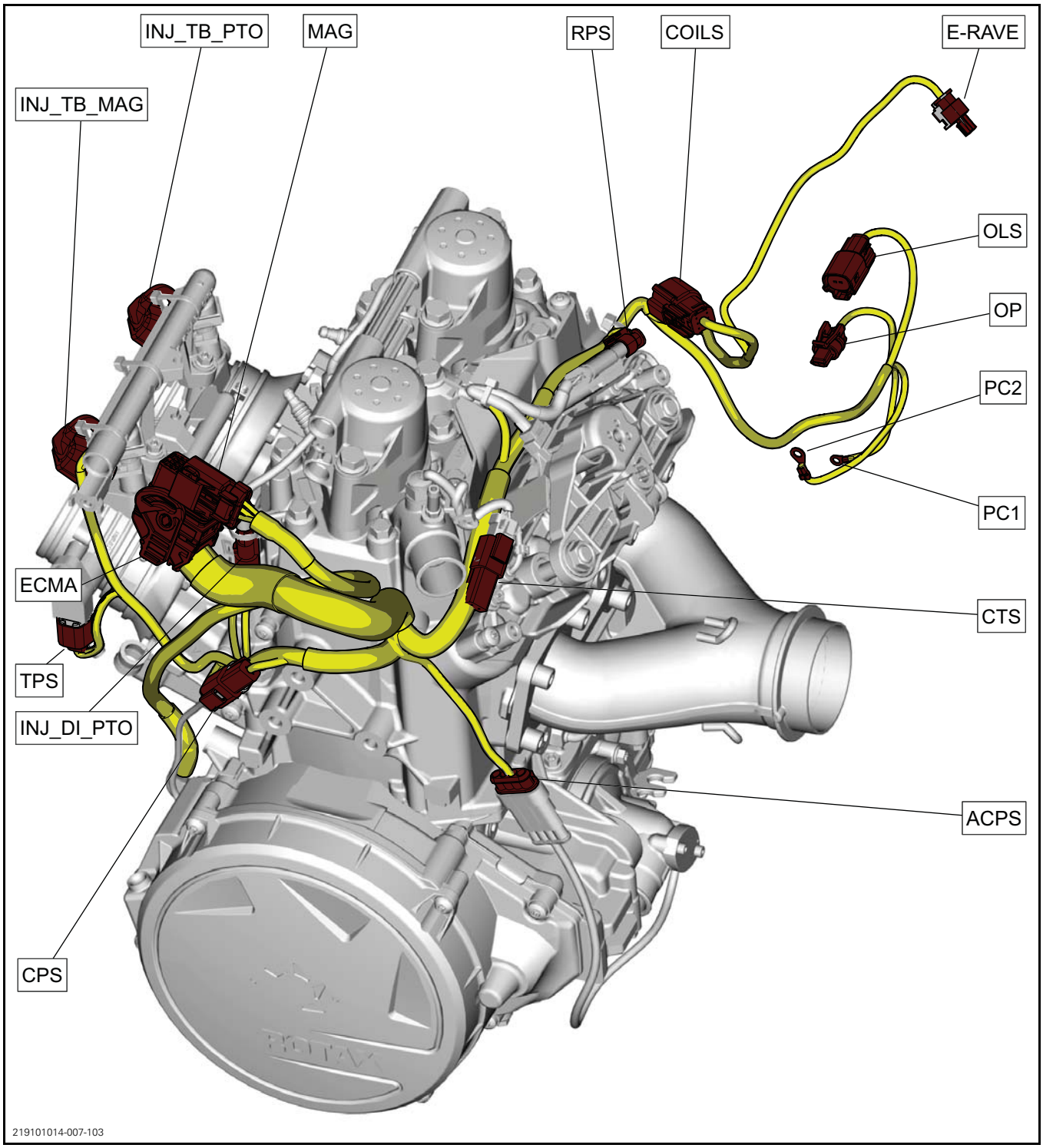

# GENERAL

## ACRONYMS

| ACRONYM | DESCRIPTION | ACRONYM | DESCRIPTION |
|---|---|---|---|
| ACC | Accessory | INJ_TB_MAG | Throttle Body Injector Magneto |
| ACS | Air Controlled Suspension | INJ_TB_PTO | Throttle Body Injector PTO |
| COM | Communication | MAG | Magneto |
| CPS | Crankshaft Position Sensor | MAPTS | Manifold Air Pressure and Temperature Sensor |
| CTS | Coolant Temperature Sensor | MG | Multifunction Gauge |
| DIMMER | Dimmer switch | OLS | Oil Level Sensor |
| ECMA | ECM connector A (engine harness) | OP | Oil Pump |
| ECMB | ECM connector B (chassis harness) | PC | Oil Pump Feedback Switch |
| EGTS | Engine Gas Temperature Sensor | RER | Rotax Electronic Reverse |
| E-RAVE | RAVE Actuator | RFID | Radio Frequency Identification |
| RPS | Rave Position Sensor) | SD | Starter Solenoid |
| FA | Fuse holder | SEAT | Heated seat |
| FAN | Radiator fan | SH1 | Switch Housing 1 |
| FB | Fusebox | STR | Steering Connector |
| FP | Fuel Pump | THCM | Thermocouple Module |
| GRIP | Heater switch | TL | Tail Light |
| HL | HeadLamp | TPS | Throttle Position Sensor |
| INJ_DI_MAG | Direct Injector Magneto | VSS | Vehicle Speed Sensor |
| INJ_DI_PTO | Direct Injector PTO | | |

# PROCEDURES

**⚠ WARNING**

When disassembling any connector for repair or replacement on the vehicle, always disconnect the battery to ensure all electrical power is removed and prevent any possibility of a short circuit. Refer to *CHARGING SYSTEM* subsection.

## DIAGNOSTIC CONNECTOR (DEUTSCH)

### Disassembling and Reassembling the Connector

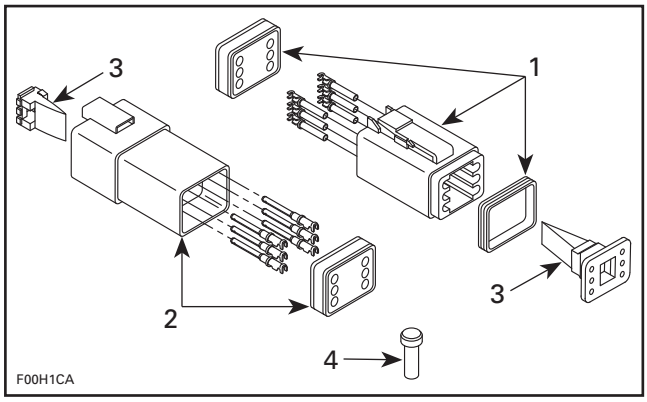


*TYPICAL - DEUTSCH CONNECTOR*
1. *Male connector*
2. *Female connector*
3. *Secondary lock*
4. *Sealing cap*

**NOTICE** Do not apply dielectric grease on terminal inside connector.

To remove terminals from connector, proceed as follows:

1. Using long nose pliers, pull out the plastic lock from between the terminals.

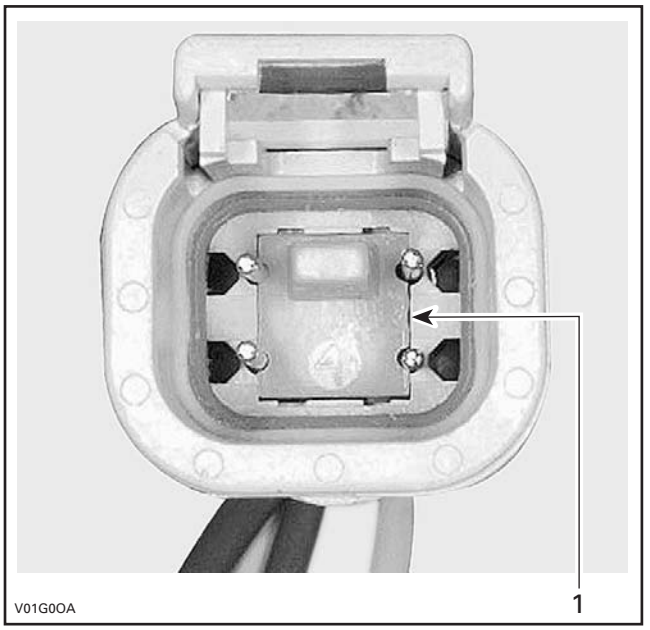


*TYPICAL - FEMALE CONNECTOR*
1. *Female lock*

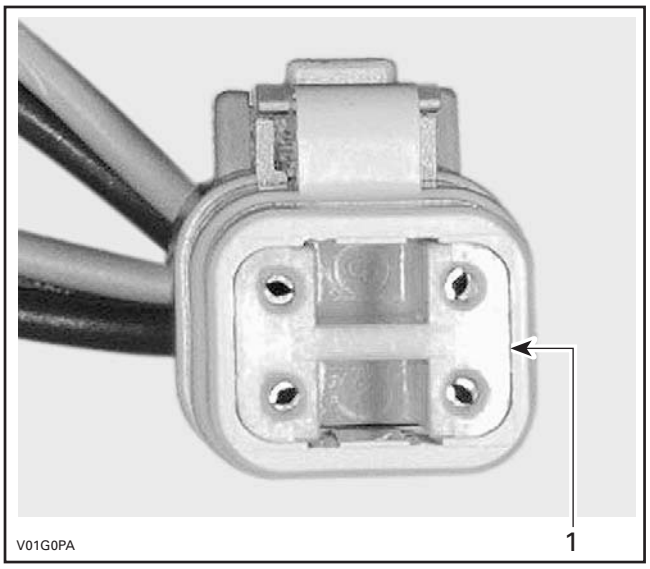


*TYPICAL - MALE CONNECTOR*
1. *Male lock*

NOTE: Before pin extraction, push wire forward to relieve pressure on retaining tab.

2. Insert a 4.8 mm (.189 in) wide screwdriver blade inside the front of the terminal cavity.
3. Pry the retaining tab away from the terminal while gently pulling the wire and terminal out of the back of the connector.

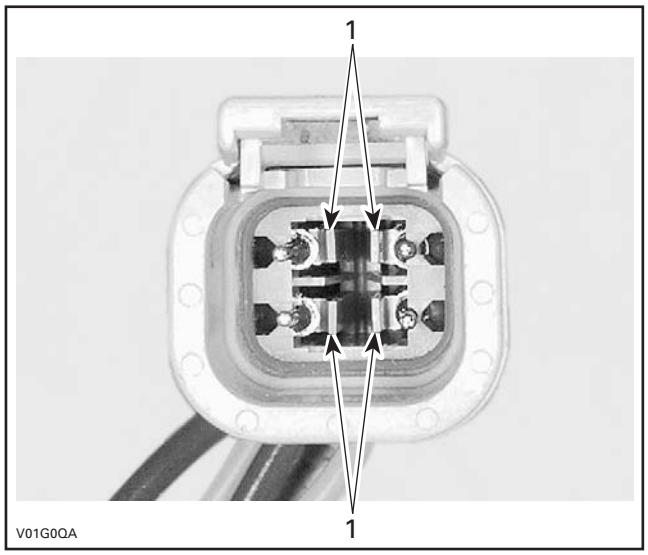


*TYPICAL - FEMALE CONNECTOR*
*1. Retaining tabs*

To install:

1. For insertion of a terminal, ensure the plastic lock is removed.
2. Insert terminal through the back of the connector in the appropriate position, and push it in as far as it will go. You should feel or hear the terminal lock engage.
3. Pull back on the terminal wire to ensure the retention fingers are holding the terminal.
4. After all required terminals have been inserted, the lock must be installed.

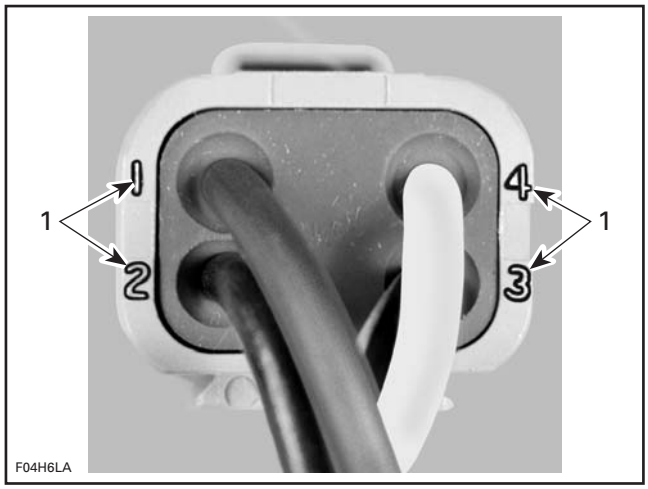


*TYPICAL - CONNECTOR PIN-OUT*
*1. Terminal position identification numbers*

# ECM CONNECTOR (MOLEX)

There are 2 connectors on the ECM.

The engine wiring harness connector is connected to ECM connector "A". The vehicle wiring harness connector is connected to ECM connector "B".

Each ECM connector has 48 pins however, connectors "A" and "B" are not interchangeable due to their specific keyways.

NOTE: If you need to remove the connector, be sure to not disconnect fuel quick-connector at ECM. If you need to remove the ECM or fuel quick connector, insure the ECM electrical connectors are securely in place and avoid fuel intrusion into connector/seal.

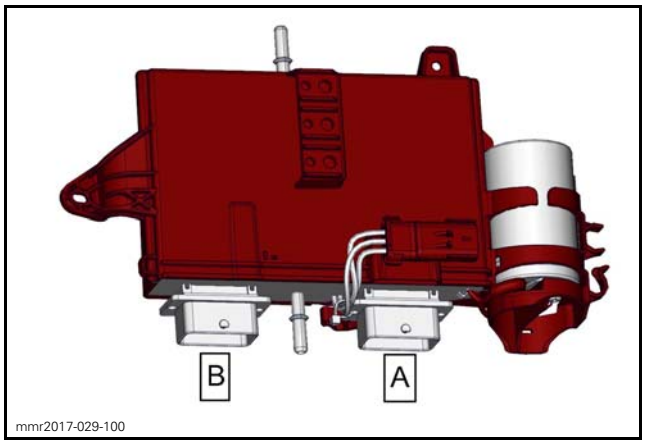


*ECM CONNECTORS*

## Removing the Connector

1. To access the ECM, refer to *ELECTRONIC FUEL INJECTION (EFI)* subsection.
2. Press **and hold** the locking tab on the connector to be disconnected.

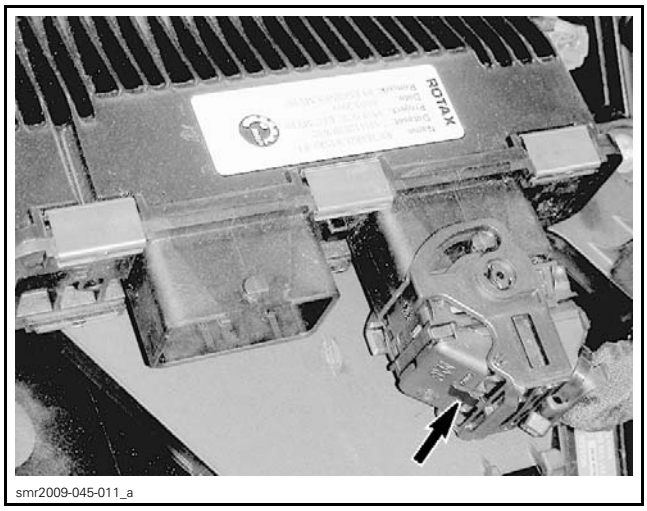


*LOCKING TAB TO PRESS AND HOLD*

3. As you hold the locking tab, rotate the connector locking cam until it stops.

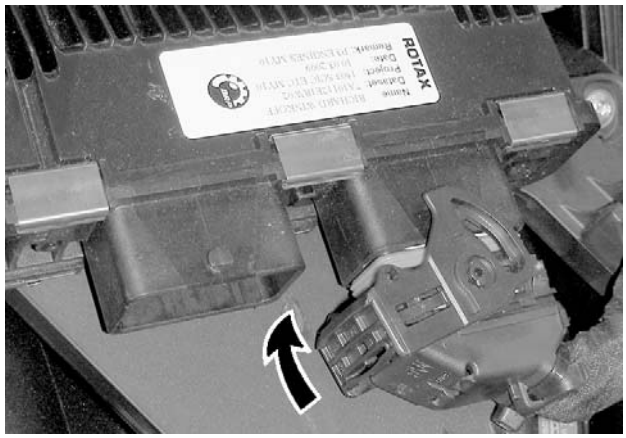

smr2009-045-012_a

*CONNECTOR LOCKING CAM ROTATION TO RELEASE*

4. Pull connector off ECM.



smr2009-045-013_a

## Installing the Connector

1. Fully open connector locking cam.

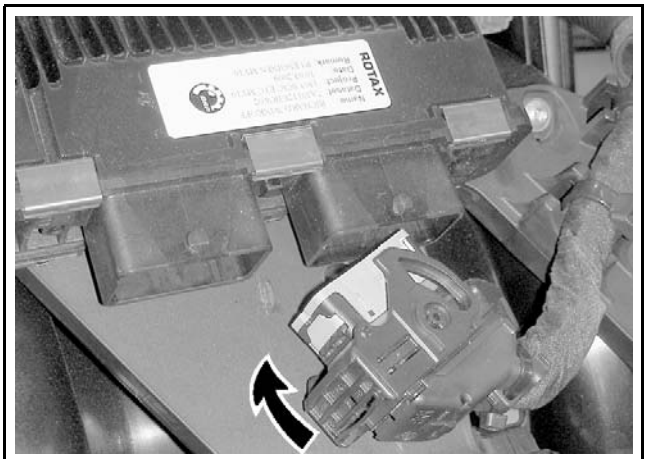

smr2009-045-013_b

*CONNECTOR LOCKING CAM IN RELEASE POSITION*

2. Insert connector on ECM.
3. As you push the connector onto the ECM, rotate the connector locking cam until it snaps locked.

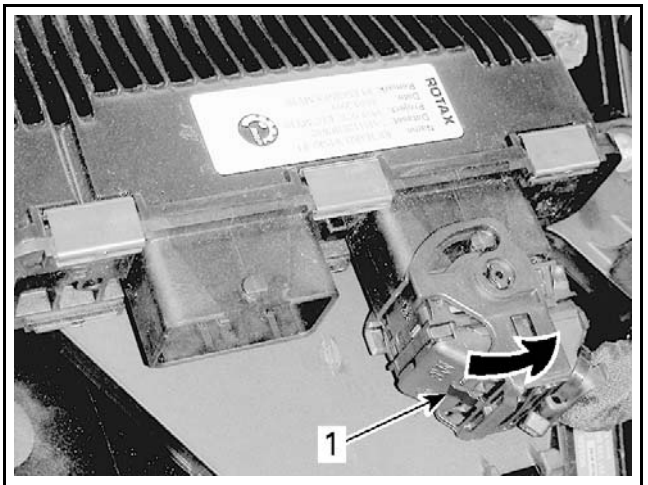

smr2009-045-011_b

*1. Locked here*

4. Ensure the locking tab is fully out.

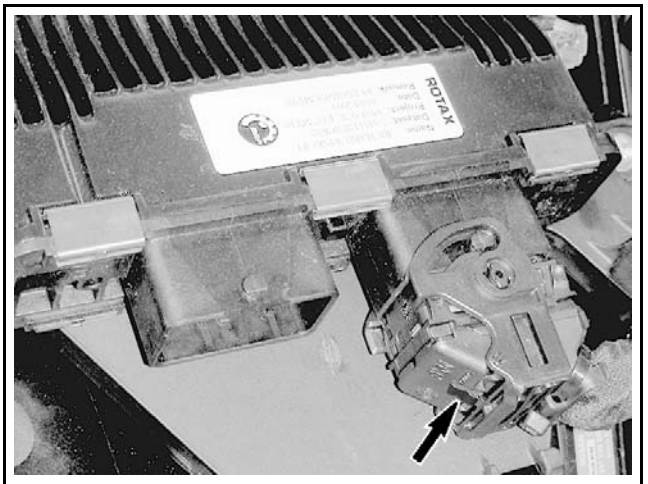

smr2009-045-011_a

*LOCKING TAB FULLY OUT*

## Inspecting the Connector

Before replacing an ECM, always check electrical connections.

1. Ensure connector locking mechanism is functioning properly.
2. Ensure all wire terminals (pins) are properly locked in the connector.
3. Ensure they are very tight, make good contact with the pins in the ECM.
4. Ensure the pins in the harness connector and the ECM connector are clean, shiny and corrosion-free.

NOTE: A "defective ECM module" could possibly be repaired simply by disconnecting and reconnecting it.

**NOTICE** Do not apply any lubricant product to the pins of the ECM connector.

## Probing the Connector

The most recommended and safest method to probe the MOLEX (ECM) connector terminals is to use the ECM adapter tool. This tool will prevent deforming or enlarging of the terminals, which would lead to bad ECM terminal contact creating intermittent or permanent problems.

| REQUIRED TOOL | |
|---|---|
| ECM ADAPTER TOOL (P/N 529 036 166) |  |

1. Disconnect the ECM connector to be probed, and reconnect it on the ECM adapter.
2. Probe wire terminals of the circuit to be tested directly in the adapter holes.

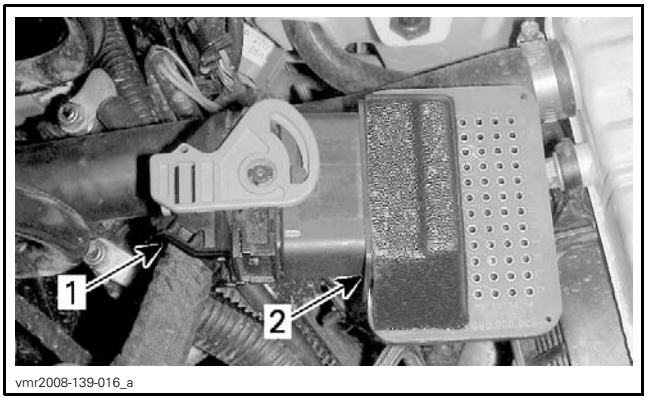


*TYPICAL*
*1. ECM connector*
*2. ECM adapter*

**NOTICE** Never probe directly on the ECM harness connector. This could change the shape or enlarge the terminals and create intermittent or permanent contact problems.

## Removing the Connector Terminal (Harness Connector)

To remove a signal terminal from the ECM harness connector, use the ECM terminal remover 2.25.

| REQUIRED TOOL | |
|---|---|
| ECM TERMINAL REMOVER 2.25 (P/N 529 036 175) |  |

To remove a power terminal, use the ECM terminal remover 3.36.

| REQUIRED TOOL | |
|---|---|
| ECM TERMINAL REMOVER 3.36 (P/N 529 036 174) |  |

1. Remove rear protector from connector.
2. Pull out the connector lock.

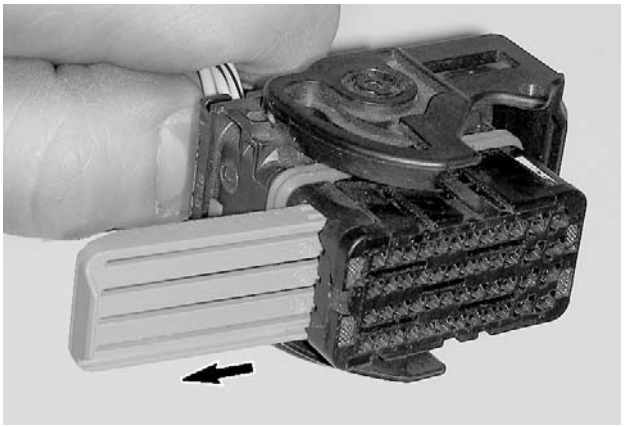


3. Insert tool to unlock terminal.

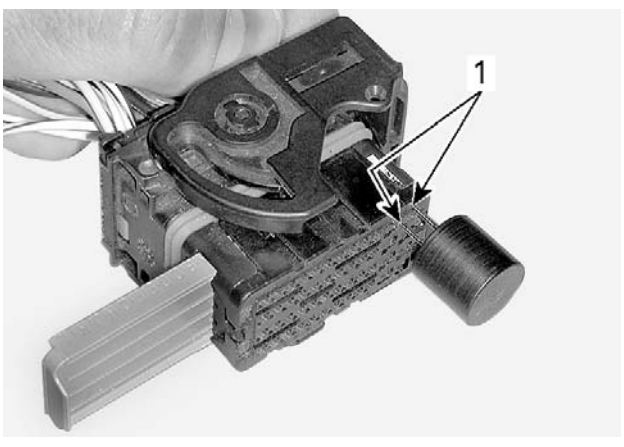


*1. Unlock here*

4. Gently pull on the wire to extract the terminal out the back of the connector.

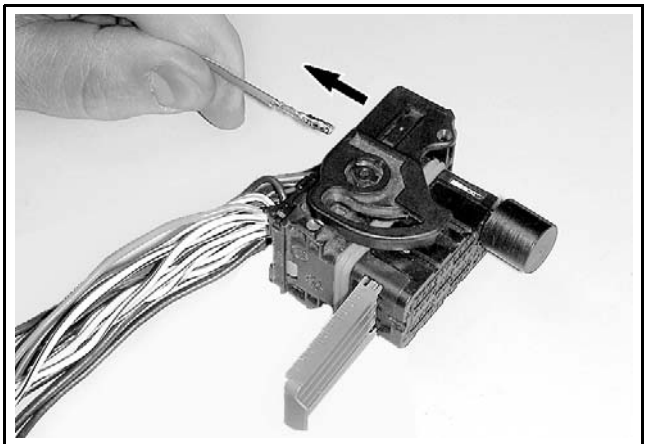
smr2009-045-027_a

**NOTICE** Before installing wire terminals in the connector, ensure all terminals are properly crimped on wires. After installation of wire terminals in the connectors, ensure they are properly locked by gently pulling on them as if to extract them.

# MOLEX CONNECTORS (EXCEPT ECM)

## Extracting a Terminal (Female Connector)

The same procedure must be done to remove a seal plug.

1. Insert a small flat screwdriver in the pry holes of the terminal locator, on the terminal side of the connector.

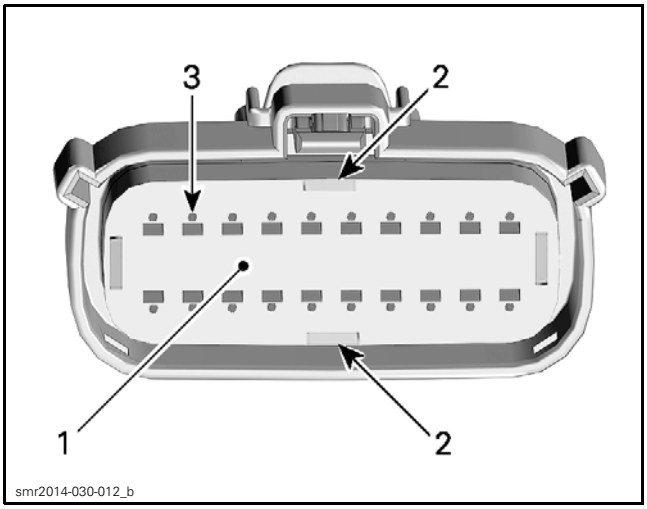

smr2014-030-012_b

*1. Terminal locator*
*2. Pry holes*
*3. Holes for inserting terminal extractor tool*

2. Apply slight pressure and pry the terminal locator out until it clicks (± 4 mm (.16 in)).

NOTE: Do not remove the terminal locator from the connector housing.

3. Insert the extractor tool in the small hole adjacent to the terminal.

NOTE: Push the extractor tool in only as far as required to release the lock from the terminal. The tool should slide along the terminal and be inserted between the connector housing and the terminal lock.

| REQUIRED TOOL | |
|---|---|
| FCI TERMINAL EXTRACTOR TOOL (P/N 54241678) |  |
| **or,** | |
| MOLEX 150 TERMINAL EXTRACTOR TOOL (P/N 63813 - 1500) |  |

4. Gently pull on the wire to extract the terminal out the back of the connector.

## Extracting the Terminal (Male Connector)

The same procedure must be done to remove a seal plug.

1. Using a pair of thin long nose pliers, pull the terminal locator (the white plastic insert in the connector) out to the detent position (± 13 mm (1/2 in) between terminal locator and connector housing face). This will allow unlocking of the pins.

**NOTICE** Do not attempt to remove the terminal locator or damage will occur. Be careful not to bend the pins when using the pliers.

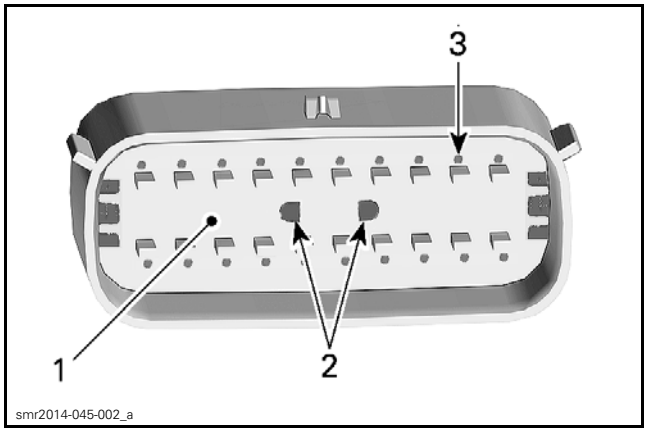

smr2014-045-002_a

*1. Terminal locator*
*2. Insert long nose pliers here*
*3. Holes for inserting terminal extractor tool*

2. Insert the extractor tool in the small hole adjacent to the terminal.

NOTE: Push the extractor tool in only as far as required to release the lock from the terminal. The tool should slide along the terminal and be inserted between the connector housing and the terminal lock.

| REQUIRED TOOL | |
|---|---|
| FCI TERMINAL EXTRACTOR TOOL (P/N 54241678) |  |
| **or,** | |
| MOLEX 150 TERMINAL EXTRACTOR TOOL (P/N 63813 - 1500) |  |

3. Gently pull on the wire to extract the terminal out the back of the connector.

## Inserting the Terminal

1. Ensure the terminal is properly crimped onto the wire.
2. Ensure the terminal locator (the white plastic insert in the connector) is out in the detent position.
3. Orient the key on the back of the male terminal with the keyway on the rear of the housing

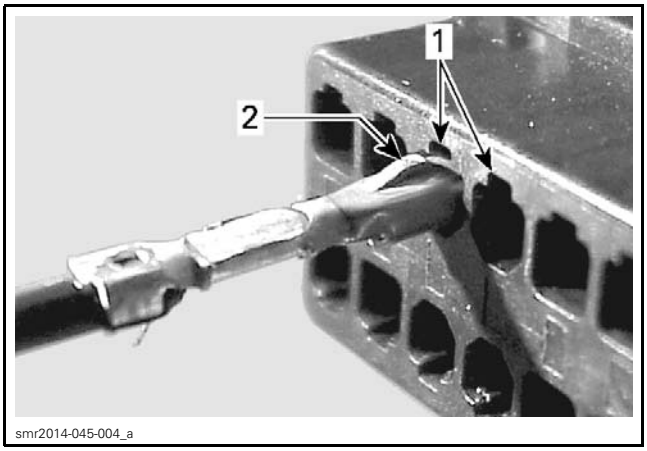

smr2014-045-004_a

*TYPICAL - PIN INSERTION*
*1. Keyway*
*2. Terminal key*

4. Push the terminal into the housing until it clicks.
5. Gently pull on the terminal to ensure it is properly locked.
6. Repeat previous steps for each terminal to be inserted.
7. Push the terminal locator into the connector to the locked position.

# DELPHI/PACKARD CONNECTORS

## Removing the Connector Terminal

To remove a terminal (pin) from the connector, use a special tool such as the Delphi terminal extractor.

| REQUIRED TOOL | |
|---|---|
| DELPHI TERMINAL EXTRACTOR (P/N 12094429) |  |

NOTE: Grinding the tool end to a taper is required.

1. Carefully insert the tool in the space provided to release the pin lock.
2. Push the pin out the front of the connector by pushing on the wire.

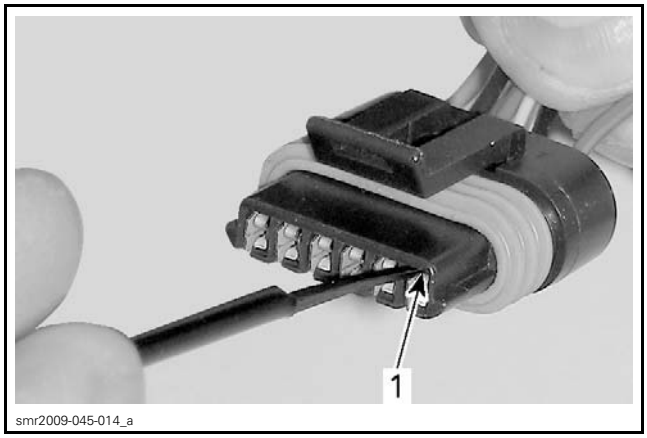

smr2009-045-014_a

*1. Unlock terminal here*

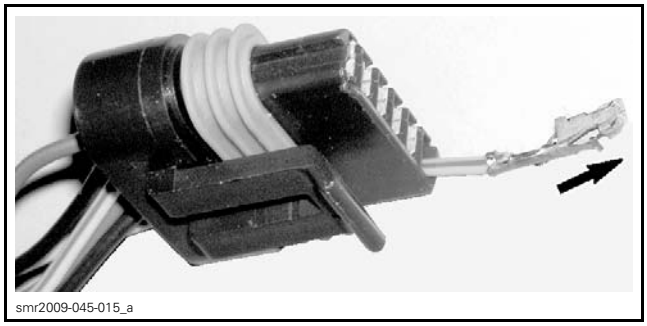
smr2009-045-015_a

***NOTICE*** **Before installing terminals in the connectors, ensure all terminals are properly crimped on the wires. After installation of the wire terminals in the connectors, ensure they are properly locked by gently pushing on them as if to extract them.**

# DELPHI CONNECTORS

## Removing the Terminal

1. To remove a terminal from connector, first remove the locking cap.

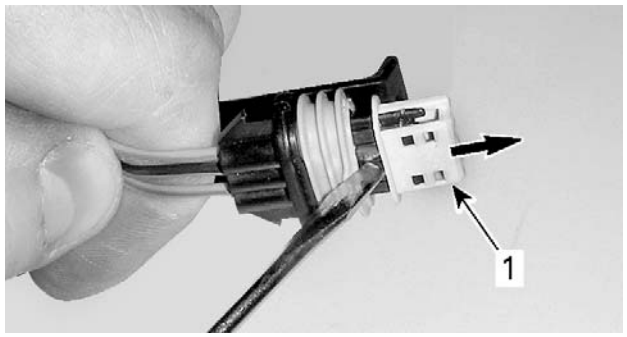

smr2009-045-023_a

*1. Pry out locking cap*

2. Carefully insert the Delphi terminal extractor in the space provided to release the pin lock.

| REQUIRED TOOL | |
|---|---|
| DELPHI TERMINAL EXTRACTOR (P/N 12094429) |  |

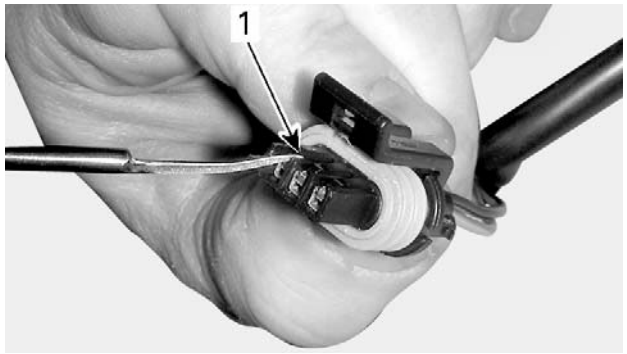

smr2009-045-024_a

*1. Unlock here*

3. Gently pull on the wire to extract the pin out the back of the connector.

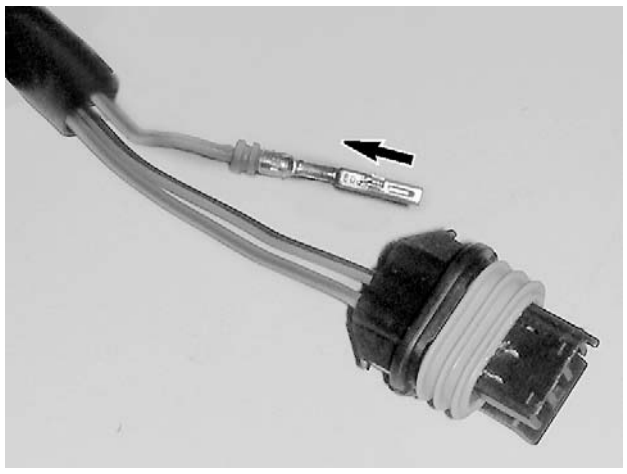
smr2009-045-028_a

**NOTICE** Before installing terminals in the connectors, ensure all terminals are properly crimped on the wires. After installation of the wire terminals in the connectors, ensure they are properly locked by gently pushing on them as if to extract them.

# BATTERY CABLES

## Crimping the Battery Cable

Carefully strip the wire approximately to 10 mm (3/8 in) in length, using a wire stripping tool or sharp blade/knife.

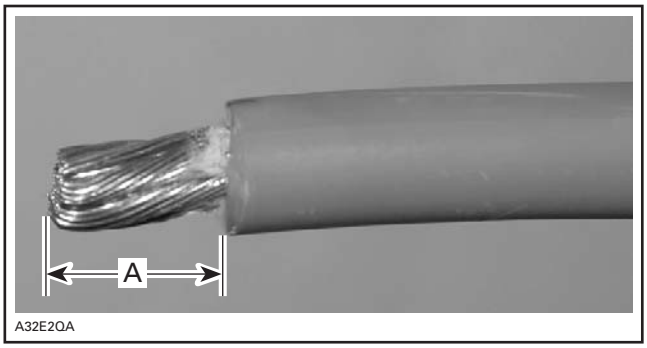

A32E2QA

*A. 10 mm (3/8 in)*

NOTE: Make sure not to cut wire strands while stripping the wire.

Install the appropriate terminal on the wire according to the requirement. Refer to appropriate *PARTS CATALOG*.

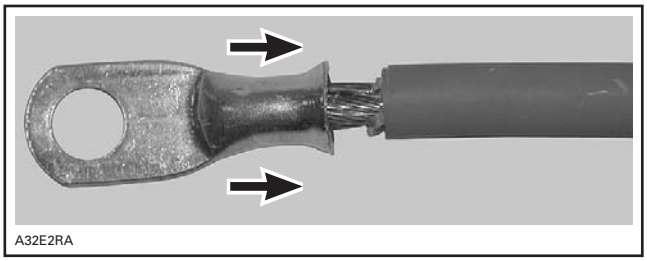
A32E2RA

*INSTALLATION OF TERMINAL*

Follow the instructions provided with the crimping tool to select the proper position of the tool.

NOTE: Different wires require different crimping pliers settings, so make sure to follow the instruction supplied with the tool.

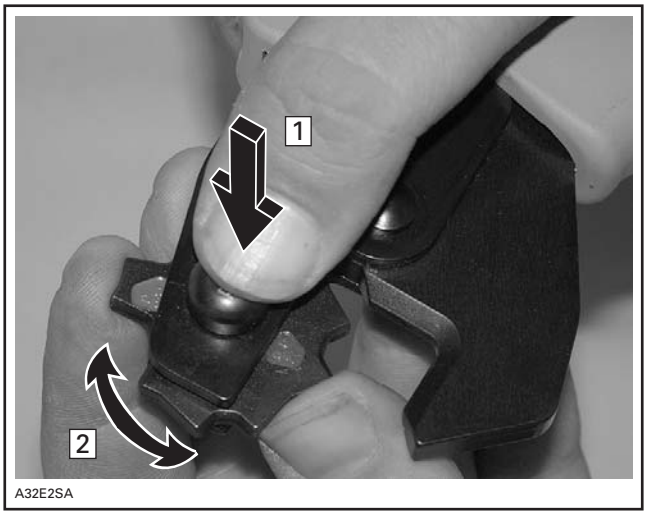


*POSITIONING THE CRIMPING PLIERS*
*Step 1: Press*
*Step 2: Rotate*

After positioning the crimping pliers, crimp the terminal already installed on wire.




*CRIMPING OF WIRE*

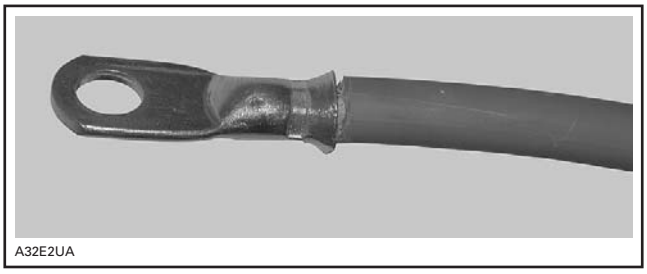


*PROPERLY CRIMPED WIRE*

To verify, if the wire is properly crimped, apply some pulling force on wire and the terminal at the same time from both directions.

**NOTICE** Never weld the wire to the terminal. Welding can change the property of the wire and it can become brittle and break.

Install the protective heat shrink rubber tube on the terminal. Heat the heat shrink rubber tube using the heat gun so that it grasps the wire and the terminal.

**NOTICE** Make sure that the protective heat shrink rubber tube has been properly installed and no part of wire is exposed.

## SPLICES REPAIR PROCEDURE

### CASE 1: Wire Detached from Splice

**NOTICE** Repairs described in this section should never be performed on harness sections that can be exposed to water.

1. Locate splice. Refer to splices location diagrams.
2. Remove wires from protector tube.
3. Locate the shrink tube protecting the defective splice.

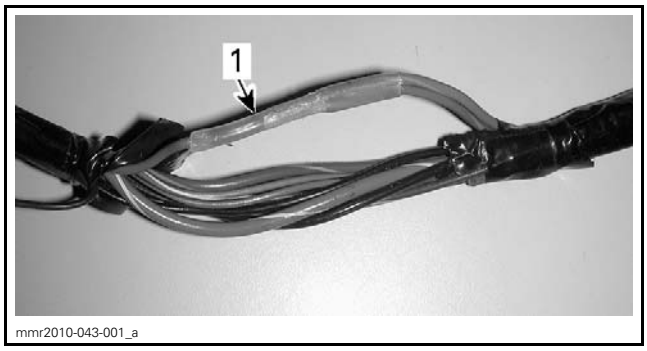


*1. Shrink tube*

4. Remove the shrink tube.
   4.1 Using a blade, cut the shrink tube.




**NOTICE** Be careful with the blade to avoid cutting wires insulation.

   4.2 Slightly heat the shrink tube using a heat gun.

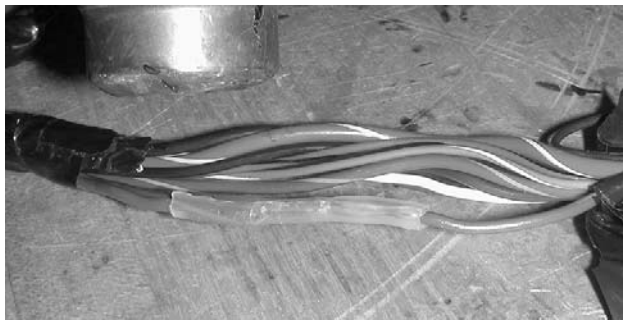
mmr2010-043-003

4.3 Remove the shrink tube with long nose pliers.

5. Locate detached wire from splice.

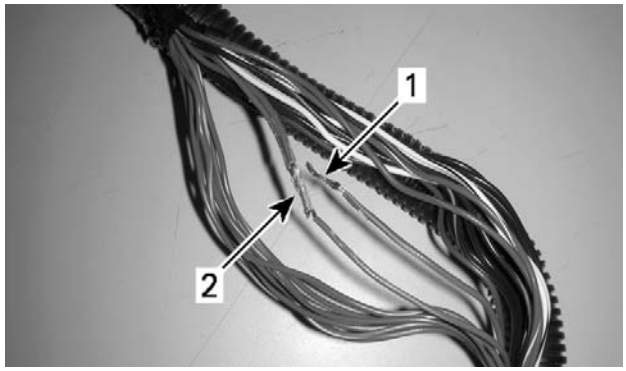

mbg2008-021-116_a

*1. Detached wire*
*2. Splice*

6. Twist detached wire around splice.

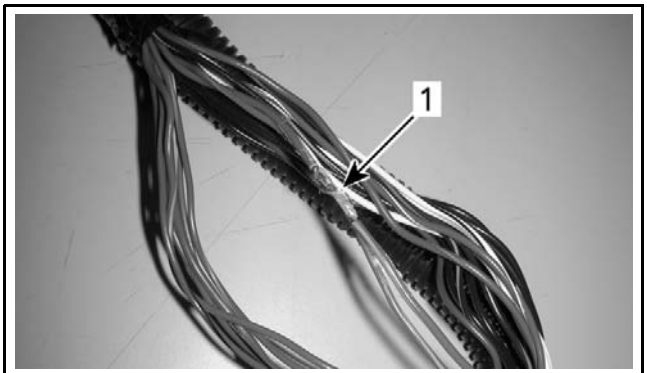

mbg2008-021-117_a

*1. Twisted wire*

7. Perform a tin solder on twisted wire.
8. Apply electrical tape to cover splice.

NOTE: Make sure tape overlaps on wire insulation, approximately 13 mm (1/2 in) each side.

9. Reinstall wires into protector tube.

## CASE 2: Wire Broken from Splice

**NOTICE** Repairs described in this section should never be performed on harness sections that can be exposed to water.

1. Locate splice. Refer to splices location diagrams.
2. Remove wires from protector tube.
3. Locate the shrink tube protecting the defective splice.

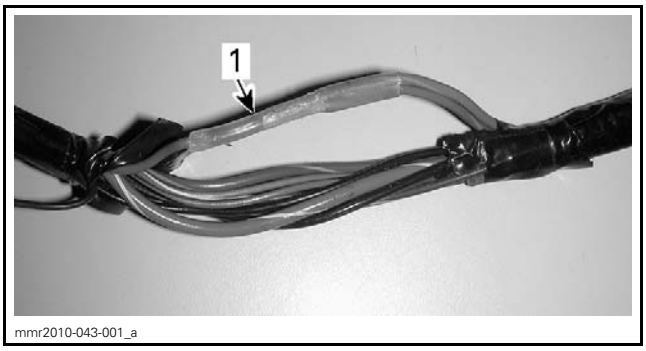

mmr2010-043-001_a

*1. Shrink tube*

4. Remove the shrink tube.

4.1 Using a blade, cut the shrink tube.


mmr2010-043-002

**NOTICE** Be careful with the blade to avoid cutting wires insulation.

4.2 Slightly heat the shrink tube using a heat gun.

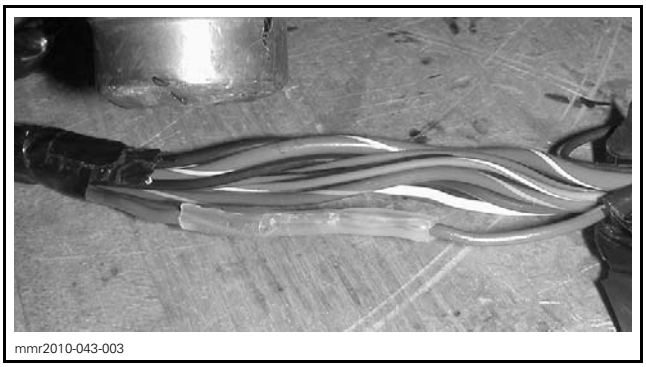
mmr2010-043-003

4.3 Remove the shrink tube with long nose pliers.

5. Locate broken wire from splice.

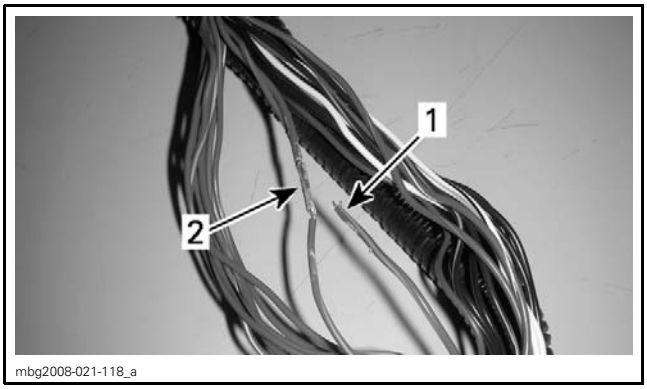


*1. Broken wire*
*2. Splice*

6. Strip wire insulation at the end of broken wire.
7. Strip wire insulation below the splice.

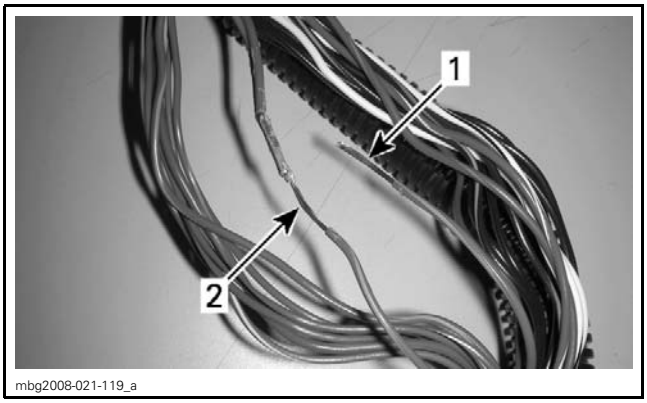


*1. Broken wire stripped*
*2. Splice wire stripped*

8. Twist wire around stripped wire.

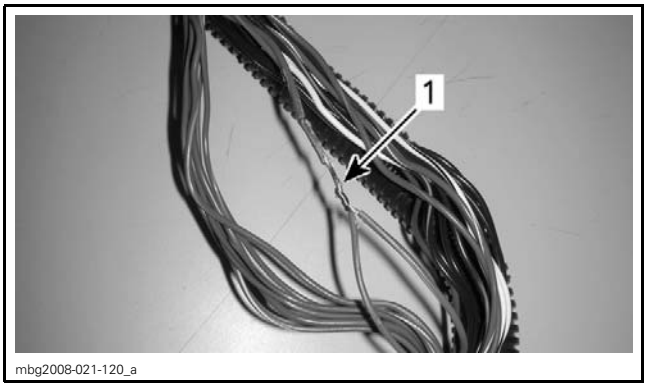


*1. Twisted wire*

9. Perform a tin solder on twisted wire.
10. Apply electrical tape to cover splice.

NOTE: Make sure tape overlaps on wire insulation, approximately 13 mm (1/2 in) each side.

11. Reinstall wires into protector tube.

NOTE: Always perform a solder on a bigger wire (lower gage).

# IGNITION SYSTEM (EFI)

## SERVICE TOOLS


| Description | Part Number | Page |
|---|---|---|
| DIAL INDICATOR ADAPTER | 529 036 132 | 243 |
| TDC DIAL INDICATOR | 295 000 143 | 243 |
| TDC DIAL INDICATOR | 414 104 700 | 243 |


## GENERAL

**⚠ WARNING**

**Always electrically disconnect both fuel injectors prior to testing for ignition spark. Otherwise, fuel vapors may ignite in presence of a spark creating a fire hazard.**

## SYSTEM DESCRIPTION

A CDI ignition system is used.

The ECM sends the current to the primary winding of a dual ignition coil which provides a separate high voltage output to each spark plug.

The ECM is programmed for optimum ignition timing under all operating conditions. Using operating conditions provided by a variety of sensors, the ECM controls the ignition timing for optimum engine operation.

The ECM will limit the maximum engine speed to approximately 8600 RPM.

## ADJUSTMENT

### UNDERSTANDING THE TDC GAUGE

Dial gauges can be either in imperial or metric units. It is crucial to identify gauge units and graduation.

### Imperial Dial Gauge

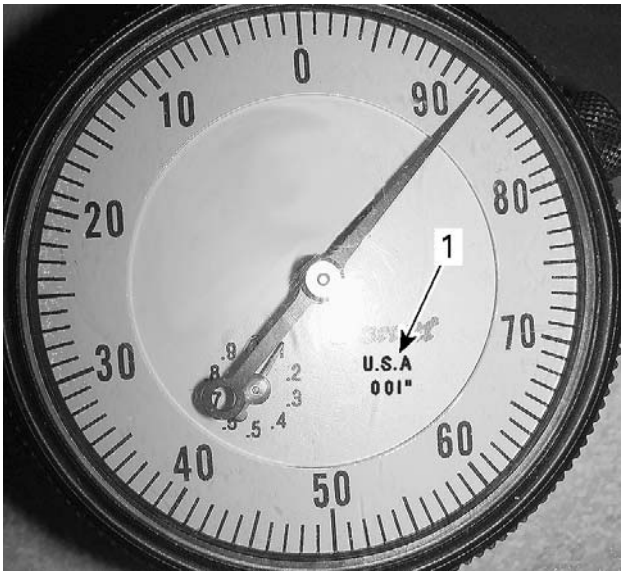


mmr2012-035-002_a

*IMPERIAL GAUGE EXAMPLE*
*1. 001 inch means it is graduated each 1/1000 inch*

| TYPICAL IMPERIAL DIAL GAUGE | | |
|---|---|---|
| GRADUATION | MEASURE PER NEEDLE TURN | MEASURE EXAMPLE: .128 INCH |
| 1/1000 inch (.001) per graduation line | 1 turn = .100 inch | 1 complete turn + 28 graduation lines |

NOTE: The small dial indicates the number of turns the long needle traveled around the main dial.

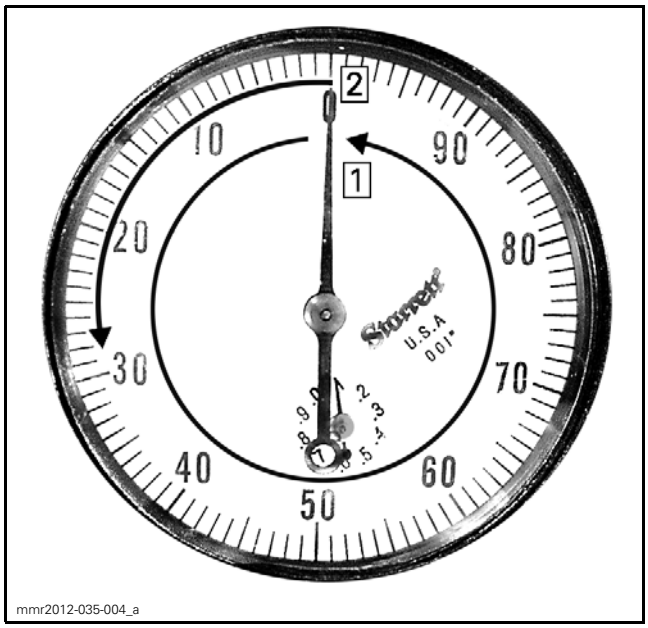


*.128 INCH AS AN EXAMPLE*
*Step 1: 1 complete turn*
*Step 2: 28 lines*

## Metric Dial Gauge

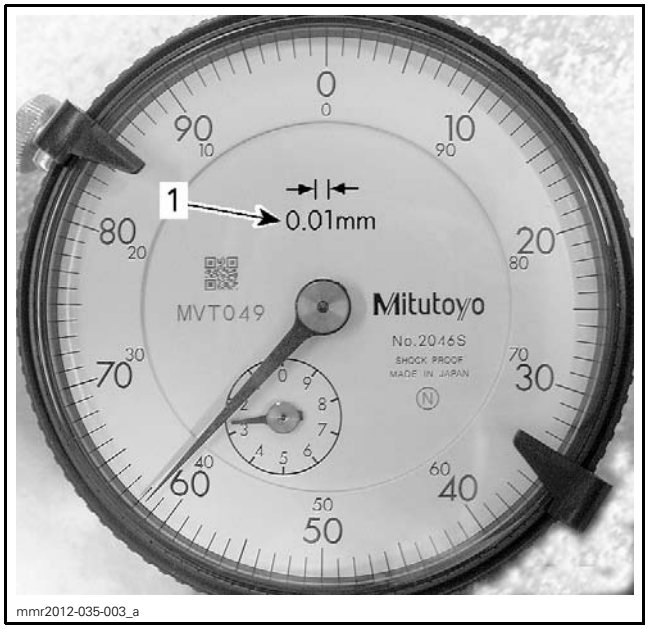


*METRIC GAUGE EXAMPLE*
*1. 0.01 mm means its graduated each 1/100 millimeter*

| METRIC DIAL GAUGE EXAMPLE | | |
|---|---|---|
| GRADUATION | MEASURE PER NEEDLE TURN | MEASURE EXAMPLE: 3.25 mm |
| 1/100 millimeter (.01) per graduation line | 1 turn = 1 millimeter | 3 complete turns + 25 graduation lines |

NOTE: The small dial indicates the number of turns the long needle traveled around the main dial.

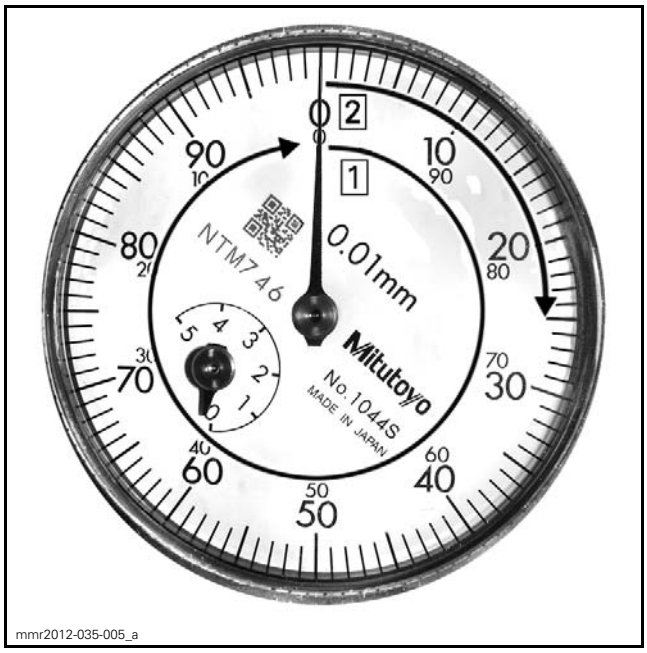


*3.25 mm AS AN EXAMPLE*
*Step 1: Complete turns (3 X)*
*Step 2: 25 lines*

# IGNITION TIMING

Normally, ignition timing adjustments should not be required. It has been set at the factory and should remain correctly adjusted as every component is fixed and non adjustable.

The only time the ignition timing may require adjustment is when replacing the:
– Crankshaft
– Magneto flywheel
– CPS
– ECM.

Adjustment procedure summary:
– TDC Gauge Installation
– Locating Piston TDC
– Scribing the timing marks
– Checking Ignition timing
– Adjusting timing.

If the ignition timing is incorrect, first check for proper crankshaft alignment. This might be an indication of a twisted crankshaft. Refer to *BOTTOM END* subsection.

## Installing the TDC Gauge

**⚠ WARNING**

**Ensure tether cord is removed from engine cut-off switch and emergency engine stop switch is in the STOP position.**

Two TDC gauges can be used:

| TDC GAUGES | |
|---|---|
| **Preferred Gauge**<br>TDC DIAL INDICATOR<br>(P/N 295 000 143)<br>**(short reach)** |  |
| TDC DIAL INDICATOR<br>(P/N 414 104 700)<br>**(long reach)** |  |

### Preparing the Gauge

| REQUIRED TOOL | |
|---|---|
| Rounded tip from DIAL INDICATOR ADAPTER<br>(P/N 529 036 132) |  |

1. Remove the roller tip from the gauge.
2. Use the rounded tip from the adapter.

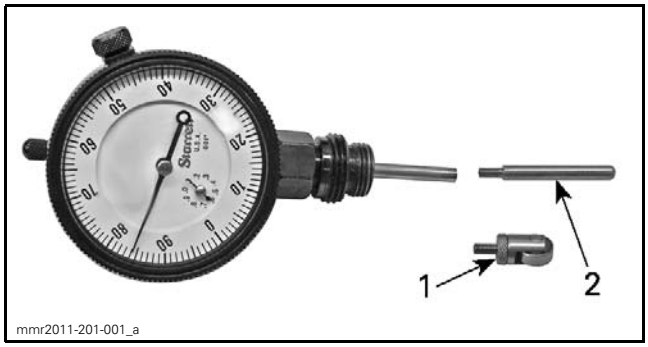


*1. Roller tip removed*
*2. Rounded tip to install*

3. Install the rounded tip on the gauge.

### Installing the Gauge

1. Remove the PTO side spark plug.
2. Carefully insert the TDC gauge through the spark plug hole.

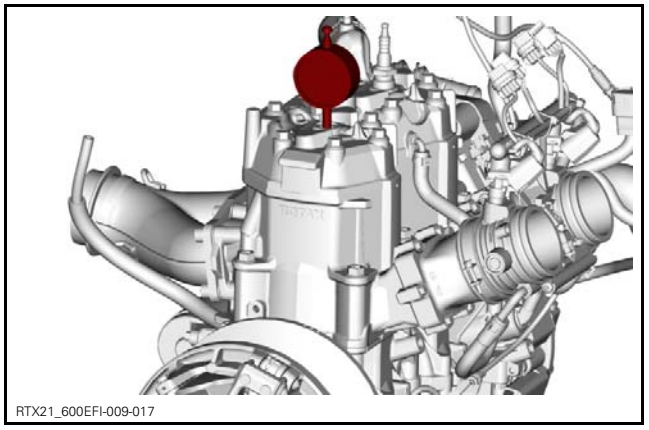


3. Screw the gauge into the spark plug hole with the dial face towards the PTO and tighten it sufficiently to prevent movement.

## Locating Piston TDC

NOTE: Normal engine rotation as seen from the PTO side is counterclockwise.

1. With a firm hold on the drive pulley, slowly rotate the drive pulley counterclockwise while observing the TDC gauge needle.

NOTE: Note that the needle stops moving only as the piston is changing direction at the top of its stroke.

2. Rotate the dial face so the "0" is in line with the needle when it stops moving.
3. Resume rotating the engine in the same direction (counterclockwise) until the gauge needle has rotated approximately 1/4 turn past TDC.
4. Then slowly rotate the engine in a clockwise direction until needle stops moving.

NOTE: The needle should stop on the "0". If not, reset the dial "0" to the needle.

5. Again, slowly rotate the drive pulley back and forth across TDC and confirm the needle always stops exactly at "0" before changing direction. "0" now indicates exact TDC.
6. Lock the dial face with the dial lock screw.

NOTE: If a difference in "0" setting the dial in each direction of rotation is easily noticeable, the engine components may suffer from excessive wear. The engine may require further inspection and maintenance.

## Scribing the Timing Mark

IMPORTANT: Make sure to understand the TDC gauge functioning. Refer to *UNDERSTANDING THE TDC GAUGE* in this subsection.

1. From the "0" (TDC), rotate the drive pulley clockwise (backwards engine rotation) until the dial needle rotates past the BTDC specification (see table below).

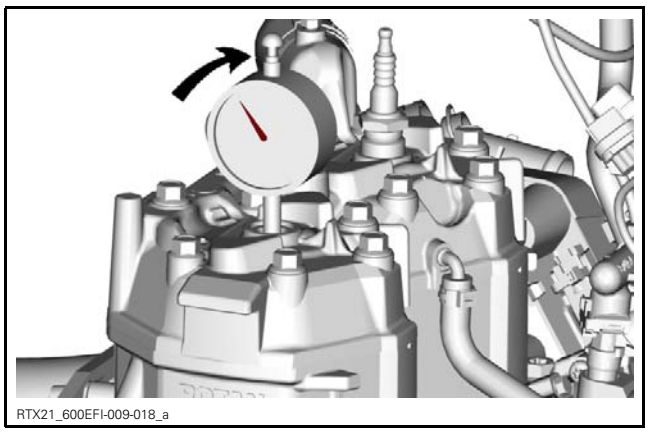


*PASS THE BTDC SPECIFICATION*

2. Then carefully rotate engine forward until needle precisely points the measurement specified in the table.

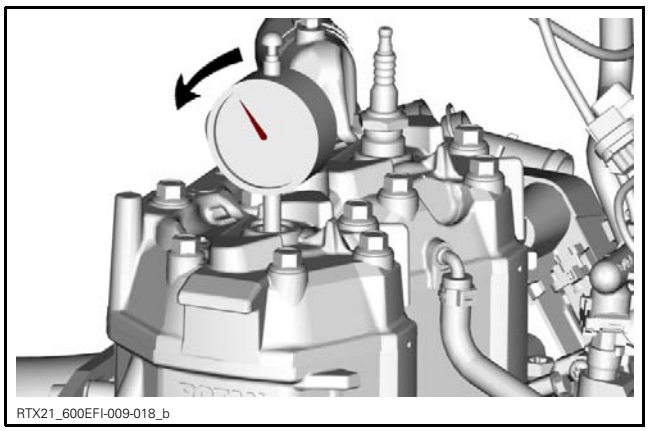


*BRING DIAL NEEDLE TO THE BTDC SPECIFICATION*

NOTE: Final setting must always be made in the normal engine rotation.

| IGNITION TIMING BTDC | |
|---|---|
| BTDC SPECIFICATION | DEGREE SETTING BTDC |
| 5.39 mm (.212 in) | 28° |

3. With the TDC gauge indicating specified timing, draw the reference mark and timing mark:
   3.1 Stick a piece of tape on the driven pulley bearing support.
   3.2 Use a permanent marker.
   3.3 Draw a line on the tape as a reference mark.
   3.4 Draw the timing mark on the drive pulley fixed sheave in line with the reference mark.

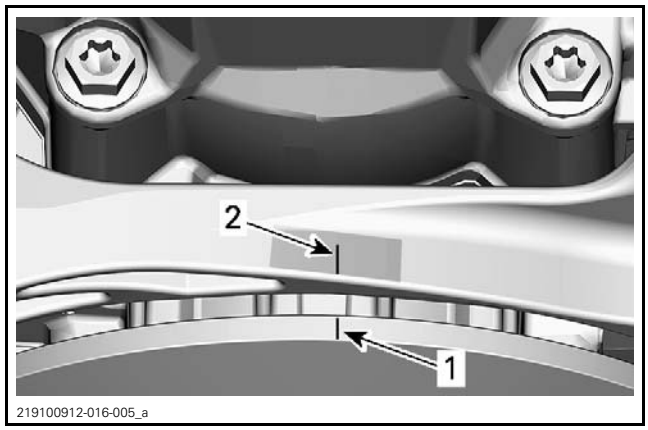


*TYPICAL*
*1. Timing mark on fixed sheave*
*2. Timing mark on a tape, on driven pulley bearing support*

4. Repeat the procedure to ascertain the marks are exactly aligned.
5. Remove the TDC gauge.
6. Reinstall the spark plug.
7. Reconnect magneto connector.
8. Check ignition timing as per applicable procedure in this subsection.

## Checking Ignition Timing

The ignition timing can be checked with either the engine hot or cold at the specified RPM.

| ENGINE SPEED FOR IGNITION TIMING CHECK |
|---|
| ENGINE RPM |
| 2500 to 4000 (1) |
| (1) In this range, the spark advance does not change during the procedure. |

To check the ignition timing proceed as follows:

**⚠ WARNING**

**Place ski tips against a wall, raise rear of vehicle on a stand, so that track does not contact the ground. Do not allow anyone in front of or behind the vehicle while engine is running. Keep clear of track and do not wear loose clothing which can get caught in moving parts.**

1. Connect the timing light pick-up to the **PTO** spark plug cable.

NOTE: Be careful to route timing light cable away from drive belt and pulleys.

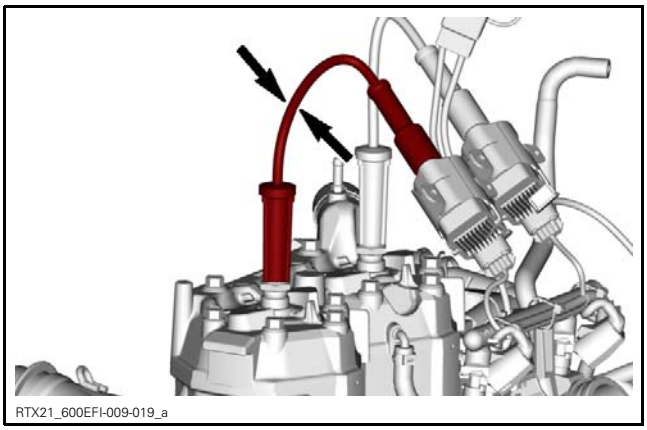
RTX21_600EFI-009-019_a

2. Connect the vehicle to the BRP diagnostic software (BUDS2).
3. Start engine and let idle.
4. In BUDS2, go to:
   - **Settings** page
   - **Vehicle** or **ECM** button
   - **Settings** tab
   - **Initializations - Ignition/Injection Timing**

NOTE: Timing will be frozen on the PTO cylinder only for RPM stability. RPM will be limited to 4000 RPM.

5. Point the timing light on the timing mark and increase engine to **3500 RPM** for a brief instant.
6. The timing mark must be aligned with the pointer end within the specified tolerance.

| TOLERANCE |
|---|
| ± 0.5° |

If timing mark and pointer are aligned, no adjustment is required.

If they are not aligned, note if timing is retarded or advanced, see following illustrations. Then, adjust timing as described in *ADJUSTING TIMING* further in this subsection.

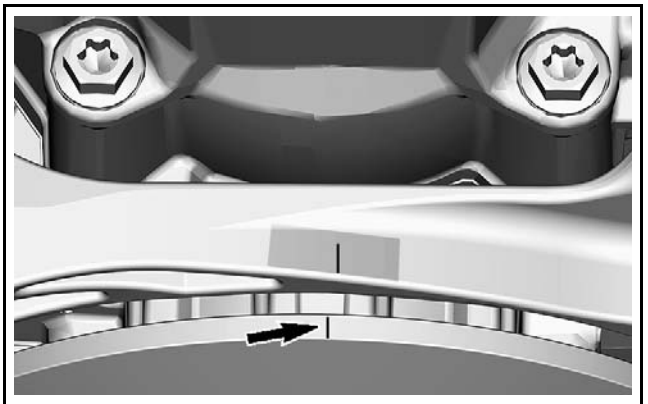
219100912-016-005_b

*TYPICAL — TIMING RETARDED BY ABOUT 1°*

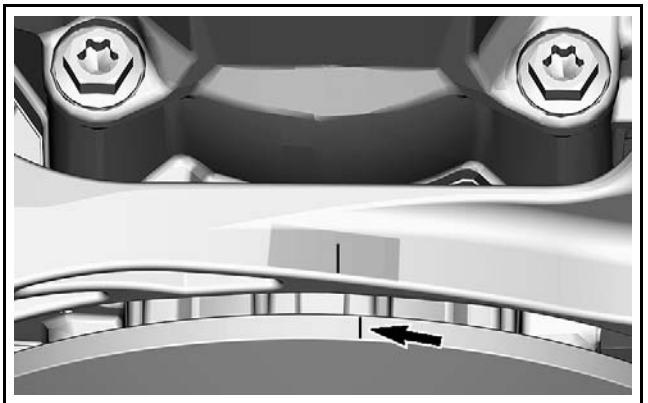
219100912-016-005_c

*TYPICAL — TIMING ADVANCED BY ABOUT 2°*

## Adjusting Timing

1. In the **Ignition/Injection Timing** area on the **Settings** page, select **Advance** or **Retard** to change the ignition timing.

NOTE: Timing will be changed in 0.5° increments.

2. Adjust the timing using the appropriate button until the timing mark is in line with the pointer, within 0.5°.
3. Unfreeze ignition timing.
4. Click **Close** button to store the ignition timing correction.
5. Shut down engine.
6. Restart engine and press the **Scan** icon in BUDS2.
7. Recheck timing to ensure ignition timing adjustment was properly stored in the ECM.
8. Increase engine RPM past 4000 RPM to ascertain the **Freeze Timing** function is no longer active.

NOTE: The **Freeze Timing** function automatically disengages when the engine is stopped.

9. Remove all tools.

# TROUBLESHOOTING

## IGNITION SYSTEM TESTING SEQUENCE

It is good practice to check for fault codes using the BRP diagnostic software BUDS2 as a first troubleshooting step. Refer to the *DIAGNOSTIC AND FAULT CODES* subsection.

In the case of ignition problems, check the following in the prescribed order until the problem can be solved:

1. Spark plugs
2. Spark plug cables
3. Wiring harness/electrical connectors
4. Emergency engine stop switch
5. Ignition cut-off switch
6. Ignition coil(s)
7. CPS
8. ECM (Engine Control Module).

If engine idles roughly or shows signs of increased emissions, the spark plugs may be incorrectly indexed. Refer to *INSTALLING THE SPARK PLUG* in this subsection.

# PROCEDURES

## SPARK PLUGS

For spark plug type, refer to *TECHNICAL SPECIFICATIONS* subsection.

### Replacing the Spark Plug

NOTE: Use only an approved spark plug socket for removal and installation. Extra care should be taken to avoid side stresses which could result in a broken spark plug.

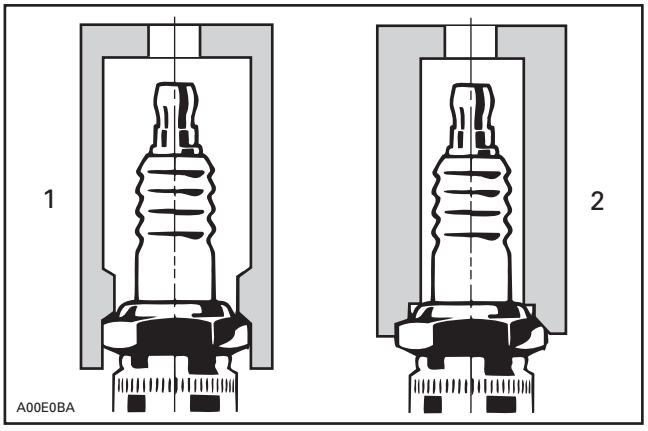


*TYPICAL*
*1. Approved socket*
*2. Improper socket*

### Removing the Spark Plugs

1. Disconnect the stator connector. Refer to *STATOR CONNECTOR ACCESS* in the *MAGNETO AND STARTER* subsection.
2. Remove the upper body module. Refer to *BODY* subsection.
3. Clean the spark plug and cylinder head with pressurized air.
4. Remove spark plug cables by gently rotating the cap and pulling it off the plug.

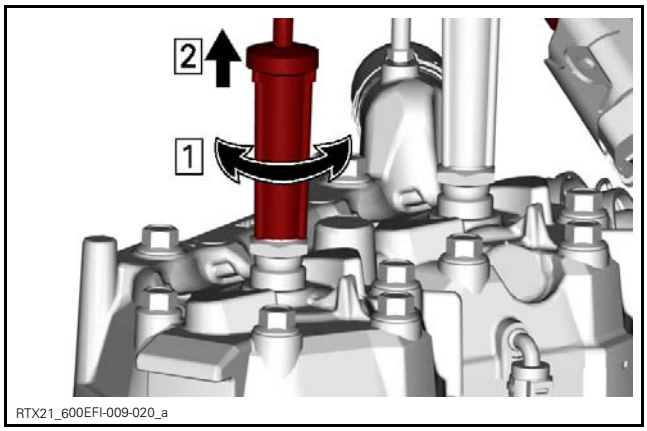


*Step 1: Rotate*
*Step 2: Pull off*

5. Unscrew the spark plug sufficiently to break the applied torque using the appropriate tools.




6. Remove spark plugs by hand.

### Installing the Spark Plugs

1. Prior to installation, ensure the contact surfaces of the cylinder head and spark plug are free of grime.
2. Using a wire gauge, confirm electrode gap is as specified. Refer to *TECHNICAL SPECIFICATIONS*.

NOTE: If spark plug gap is incorrect, use another spark plug.

3. Hand screw spark plug into cylinder head until it bottoms out.
4. Apply specific torque using a torque wrench and approved spark plug socket.

| TIGHTENING TORQUE | |
|---|---|
| Spark plug | 27.5 N•m ± 2.5 N•m (20 lbf•ft ± 2 lbf•ft) |

# SPARK PLUG CABLES

**NOTICE** Do not connect spark plug to opposite side coil.

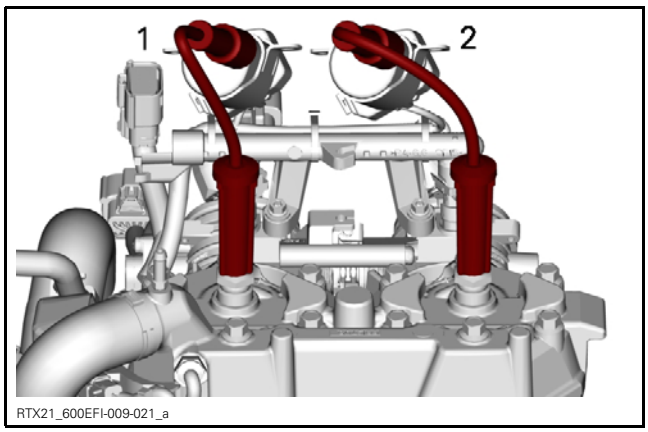


*1. MAG side*
*2. PTO side*

## Measuring Spark Plug Cable Resistance

If the spark plug cables are in good condition, carry out the following resistance test.

1. Remove each spark plug cable from its ignition coil and spark plug.
2. Insert a probe in each cable end and measure the resistance.

| SPARK PLUG CABLE SPECIFICATION |
|---|
| 2160 – 6870 Ω |

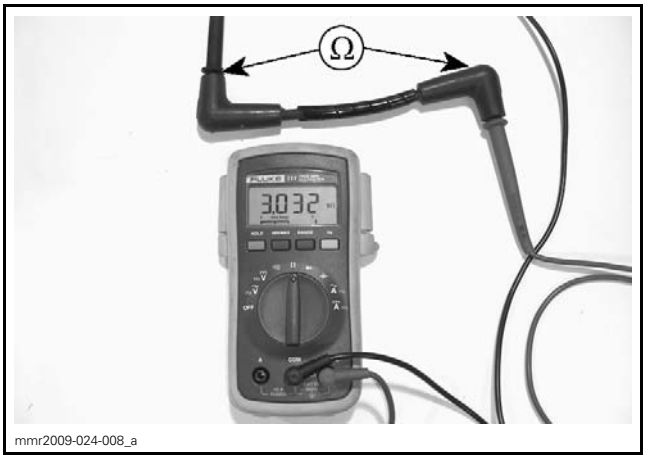


*SPARK PLUG CABLE RESISTANCE TEST*

If resistance is not as specified, replace spark plug cable.

# EMERGENCY ENGINE STOP SWITCH

## Emergency Engine Stop Switch Operation

The emergency engine stop switch provides a ground signal to the ECM when STOP is selected.

Refer to applicable *WIRING DIAGRAM* for details.

## Testing Emergency Engine Stop Switch

1. Disconnect *STR 6P* connector. For connector location, refer to *WIRING HARNESS AND CONNECTORS*.
2. Measure resistance as per following table.

| STR 6P CONNECTOR PIN | EMERGENCY ENGINE STOP SWITCH POSITION | SPECIFICATION |
|---|---|---|
| 3 and 6 | RUN | O.L. |
| | STOP | Close to 0 Ω (Continuity) |

NOTE: If emergency engine stop switch is unplugged, engine will start and run. If emergency engine stop switch is jumped, engine will stop.

# IGNITION COILS

## Testing for Spark

Ensure emergency stop switch is set to *RUN*.

NOTE: Use ONLY an approved inductive spark plug tester or a new spark plug to test for ignition spark. In-line (series connected) spark testers must not be used. Radio frequency interference (RFI) generated by the arcing current may cause erratic behavior in the ECM.

**⚠ WARNING**

**Always electrically disconnect both fuel injectors prior to testing for ignition spark. Otherwise, fuel vapors may ignite in presence of a spark, creating a fire hazard.**

1. Ensure emergency stop switch is set to *RUN*.
2. Install the inductive spark tester (or a new spark plug) on the spark plug cable **(Do not remove spark plugs installed on engine)**.
3. Activate ignition coil with BUDS2.
4. If no spark is produced, test ignition coil.
5. If a spark is produced, install new spark plugs in the engine and repeat the test to assure the new spark plugs are in good condition and functioning correctly.

## Testing Ignition Coils

1. Set emergency stop switch to *RUN*.
2. Backprobe the ignition coil connector and measure voltage as per following table.

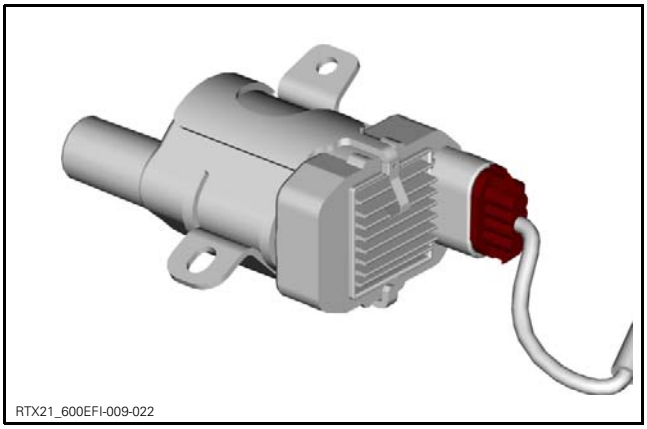

RTX21_600EFI-009-022

3. Use BUDS2 to activate ignition coil and measure the control signal.

| IGNITION COIL CONNECTOR PIN | DESCRIPTION | SPECIFICATION |
|---|---|---|
| A | Ground | Battery ground |
| B | Control ground | - |
| C | Control | Vary when activated 0.015V-0.222V[1] |
| D | 12 Volts | Battery voltage |

[1] Control signal actually varies between 13 - 15 volts for 800 micro-seconds (DWELL time) but most multimeters cannot read it, it happens so fast.

4. If all inputs are as per specifications and there is no spark, replace ignition coil.
5. If a pin does not test as per specification, troubleshoot the affected wire continuity to ground or ECM. Refer to *WIRING DIAGRAM*.

## Removing Ignition Coil

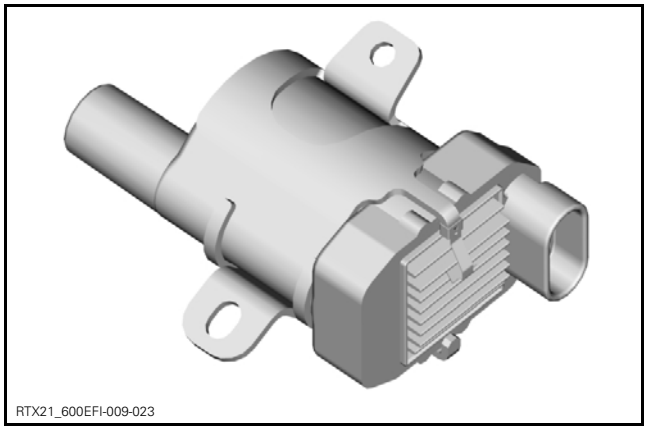

RTX21_600EFI-009-023

1. Note position of spark plug cables and remove them from the spark plugs.
2. Unplug ignition coil connector.
3. Remove the primary air intake silencer.
4. Remove and discard the push nut.
5. Remove ignition coil.

## Installing Ignition Coil

The installation is the reverse of the removal procedure. However, pay attention to the following.

Install new push nuts.

# IGNITION SYSTEM (600 ACE)

## SERVICE TOOLS

| Description | Part Number | Page |
|---|---|---|
| ECM ADAPTER TOOL | 529 036 166 | 251, 253 |
| FLUKE 115 MULTIMETER | 529 035 868 | 250, 252 |

## GENERAL

Cables and locking ties removed during a procedure must be reinstalled as per factory standards.

**NOTICE** Never force a multimeter probe into an electrical terminal.

## SYSTEM DESCRIPTION

The ignition system is a digital inductive type (IDI) system.

Ignition system parameters such as ignition timing, spark duration, and firing order, are controlled by the ECM in order to meet engine operational requirements.

Direct ignition coils (stick coils) are used for each cylinder.

When a ground signal is provided by the ECM to an ignition coil primary winding, a high voltage is induced in the ignition coil secondary winding that is used to produce a spark at the spark plug electrode.

Cylinder 1 is on the PTO side of the engine.

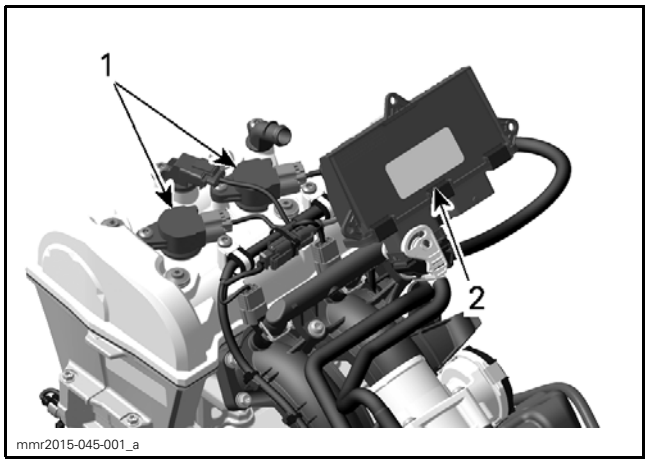


*600 ACE ENGINE*
*1. Ignition coils*
*2. ECM*

### Ignition Timing

Ignition timing is not adjustable.

The ECM is programmed with data (ignition mappings), used along with data received from a variety of sensors to establish optimum ignition timing under all engine operating conditions.

The firing of each spark plug is independent of the other(s).

## TROUBLESHOOTING

## IGNITION SYSTEM TESTING

The ECM controls the ignition system.

If a fault is detected by the ECM, the check engine light will turn on.

A check engine message will be displayed in the gauge digital display and a beep code will be emitted. Refer to *DIAGNOSTIC AND FAULT CODES* subsection for details.

The ECM can detect a problem on the primary winding or circuit of the ignition coils.

The secondary winding of the ignition coils is not monitored by the ECM.

Other sensors in relation with the ignition system are also monitored by the ECM.

### Ignition System Testing Sequence

Check for fault codes using B.U.D.S. software as a first troubleshooting step. Refer to *DIAGNOSTIC AND FAULT CODES* subsection.

Check the following fuse(s):

| IGNITION/INJECTOR FUSE (HIC) |
|---|
| Fuse 5 |

If a fuse is burnt, test for a short circuit or faulty component on that fuse circuit before replacing the fuse. Refer to *POWER DISTRIBUTION AND GROUNDS* subsection.

Check ignition spark, refer to *IGNITION COIL QUICK TEST USING B.U.D.S.* in this subsection.

# PROCEDURES

## IGNITION COILS

### Ignition Coil Quick Test using B.U.D.S.

This test confirms the working condition of the ignition circuit and ignition coil for the cylinder tested.

1. Remove ignition coil, refer to *IGNITION COIL REMOVAL* in this subsection.
2. Install a spark tester on the ignition coil.
3. Connect to the latest applicable B.U.D.S. version, refer to *COMMUNICATION TOOLS AND B.U.D.S.* subsection.
4. In B.U.D.S., select;
   - Read Data
   - Activationpage tab
5. Energize the ignition coil by selecting it on the engine illustration.

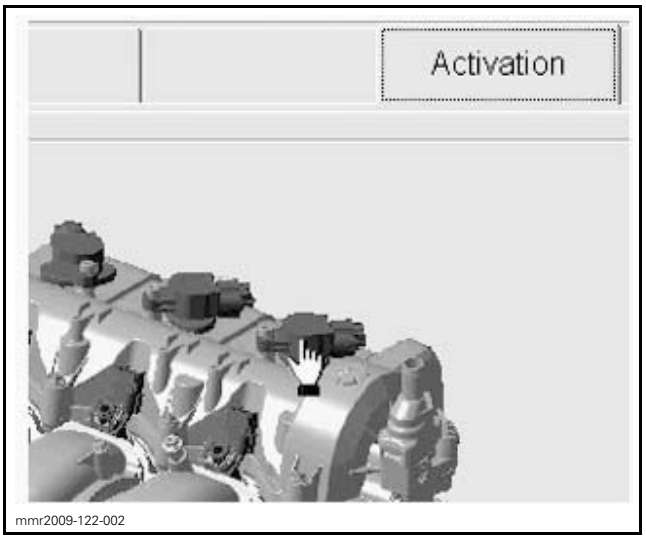


*TYPICAL — IGNITION COIL ACTIVATION*

If there is no spark, carry out the following tests.

### Ignition Coil Input Voltage Test

1. Disconnect the ignition coil connector.
2. Install tether cord cap on engine cut-off switch.
3. Set emergency engine stop switch to RUN.
4. Briefly press on START/RER switch to wake up ECM.
5. Measure voltage as per following table.

| REQUIRED TOOL | |
|---|---|
| FLUKE 115 MULTIMETER (P/N 529 035 868) |  |

NOTE: Test is valid only if ECM is active (gauge will be on).

| IGNITION COIL INPUT VOLTAGE TEST | | |
|---|---|---|
| TEST PROBES | | VOLTAGE |
| PTO coil VIOLET/BLUE wire | Battery ground | Battery voltage |
| MAG coil VIOLET/GREEN wire | | |

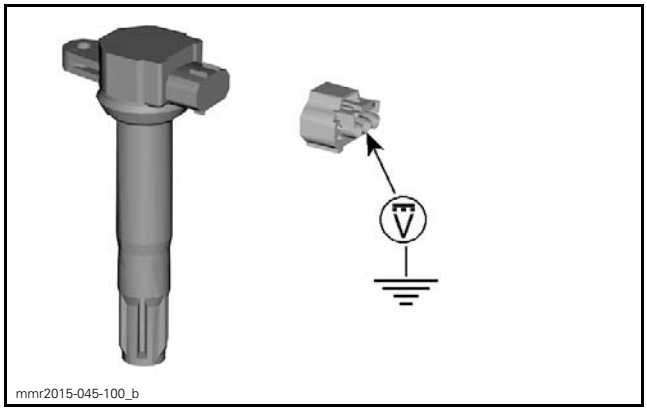


*TYPICAL — IGNITION COIL INPUT VOLTAGE TEST*

| TEST RESULT | SERVICE ACTION |
|---|---|
| Battery voltage **is** read | Refer to *IGNITION COIL CIRCUIT CONTINUITY TEST* |
| Battery voltage **NOT** read | Refer to *IGNITION COIL CIRCUIT CONTINUITY TEST* |

6. Remove tether cord cap from engine cut-off switch.

### Ignition Coil Circuit Continuity Test

#### Power Input Wire (Ignition Coil)

1. Ensure that tether cord cap is removed from engine cut-off switch.
2. Ensure emergency engine stop switch is set to STOP.

3. Locate the applicable ignition/injector fuse (F5) in the fuse box. Refer to *POWER DISTRIBUTION AND GROUNDS* subsection.
4. Disconnect ignition coil connector.
5. Remove applicable fuse.
6. Test for continuity of circuit as per following table.

NOTE: Probe the metallic part on top of the fuse.

| POWER INPUT WIRE CONTINUITY TEST (IGNITION COIL) FUSE BOX | | | |
|---|---|---|---|
| **IGNITION COIL** | **IGNITION COIL CONNECTOR WIRE** | **FUSE BOX CONTACT** | **RESISTANCE** |
| PTO | VIOLET/ BLUE | 5B (fuse 5) | Close to 0 Ω (continuity) |
| MAG | VIOLET/ GREEN | | |

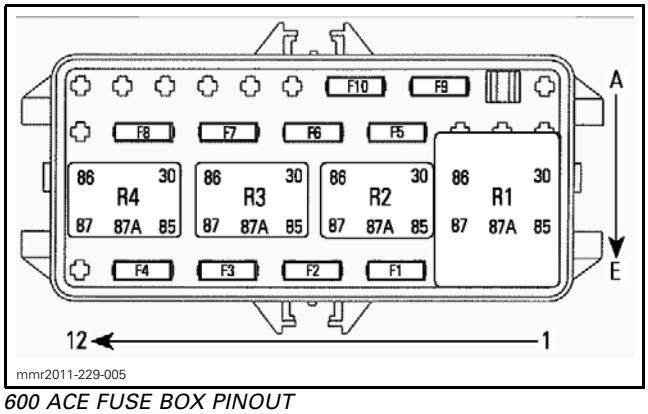


*600 ACE FUSE BOX PINOUT*

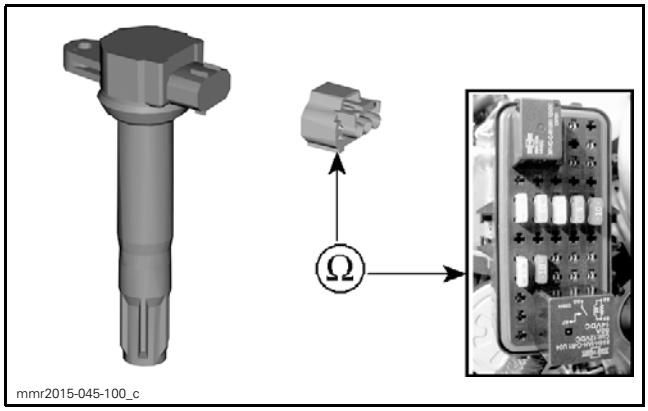


*TYPICAL — POWER INPUT WIRE CONTINUITY TEST (IGNITION COIL)*

If continuity is not measured as specified, test the engine and vehicle harnesses.

### Ground Signal Wire (Ignition Coil)

1. Disconnect ECM connector A. Refer to *ELECTRONIC FUEL INJECTION* subsection.
2. Disconnect ignition coil connector.
3. Test for continuity of ignition coil ground signal circuit as per following table.

| REQUIRED TOOL | |
|---|---|
| ECM ADAPTER TOOL (P/N 529 036 166) |  |

| GROUND SIGNAL WIRE CONTINUITY TEST (IGNITION COIL) | | | |
|---|---|---|---|
| **IGNITION COIL** | **IGNITION COIL CONNECTOR WIRE** | **ECM PIN** | **RESISTANCE** |
| PTO | BROWN/ BLACK | M1 | Close to 0 Ω (continuity) |
| MAG | BROWN/ ORANGE | M2 | |

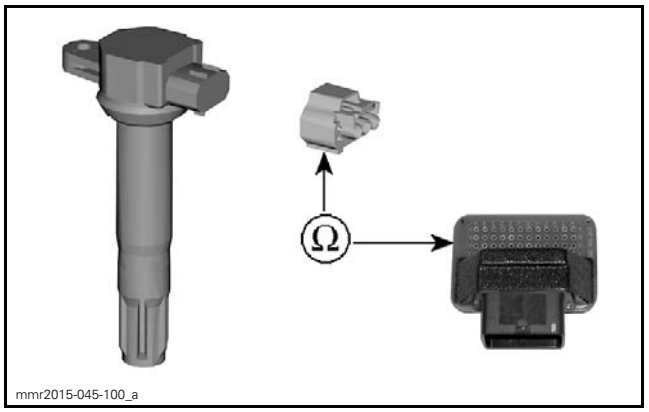


*TYPICAL — IGNITION COIL GROUND SIGNAL WIRE CONTINUITY TEST*

If continuity is not measured as specified, repair the connector or replace the engine wiring harness.

## Ignition Coil Resistance Test

An ignition coil with a good resistance measurement can still be faulty. Current leakage can occur at high voltage levels which is not detectable with an ohmmeter. Replacing the ignition coil may be necessary as a test.

### Primary Winding

1. Remove ignition coil. Refer to *IGNITION COIL REMOVAL* in this subsection.
2. Set the multimeter to Ω and measure primary winding resistance as specified.

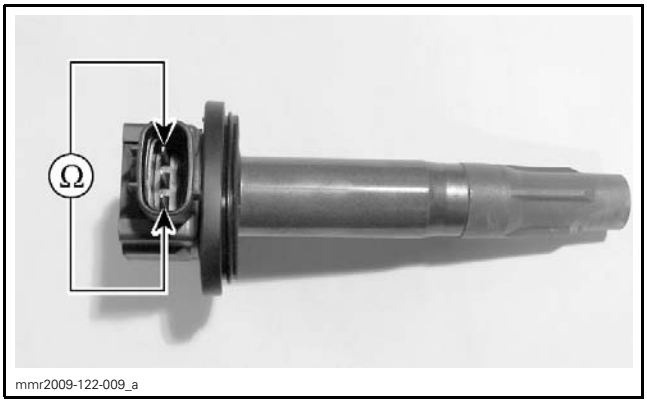

mmr2009-122-009_a

| CIRCUIT | PIN | RESISTANCE @ 20°C (68°F) |
|---|---|---|
| Primary | 1 and 3 | 0.8 - 0.97 Ω |

If resistance is not within specification, replace ignition coil.

### Secondary Winding

The secondary winding on this type of ignition coil cannot be tested.

## Ignition Coil Removal

1. Disconnect ignition coil connector.
2. Remove ignition coil retaining screw.

***NOTICE*** **Do not pry on ignition coil with a tool.**

3. Remove ignition coil from spark plug by rotating coil side to side as you pull up.

NOTE: For cylinder 2, turn steering column to ease ignition coil removal.

## Ignition Coil Installation

1. Align the retaining screw hole of the ignition coil with the threaded hole on the valve cover.
2. Install the ignition coil on the spark plug and push it all the way down until it rests on the valve cover.
3. Install the retaining screw an tighten to specification.

| IGNITION COIL RETAINING SCREW | |
|---|---|
| Tightening torque | 9 N•m ± 1 N•m (80 lbf•**in** ± 9 lbf•**in**) |

4. Connect ignition coil connector.

# SPARK PLUGS

## Spark Plug Application

| ENGINE | SPARK PLUG |
|---|---|
| 600 ACE | MR7BI8 |

# EMERGENCY ENGINE STOP SWITCH

## Emergency Engine Stop Switch Operation

The emergency engine stop switch provides a ground signal to the ECM when STOP is selected.

The ground signal is applied to the ECM connector as per following table.

| MODEL | ECM PIN |
|---|---|
| 600 ACE | B-4C |

## Emergency Engine Stop Switch Continuity Test

Remove gauge.

Check switch continuity as per following table.

| REQUIRED TOOL | |
|---|---|
| FLUKE 115 MULTIMETER (P/N 529 035 868) |  |

| **EMERGENCY ENGINE STOP SWITCH CONTINUITY TEST** | | | |
|---|---|---|---|
| **SWITCH POSITION** | **TEST PROBES** | | **RESISTANCE** |
| RUN | BK wire | YE/BK wire | Infinite (OL) |
| STOP | | | Close to 0 Ω |

If readings are not as specified in table, check wiring and connections going to switch. If good, replace switch.

# ENGINE CUT-OFF SWITCH

## Engine Cut-Off Switch Continuity Test

Disconnect engine cut-off switch connector.

Carry out the following continuity tests.

| REQUIRED TOOL | |
|---|---|
| FLUKE 115 MULTIMETER (P/N 529 035 868) |  |

### Tether Cord Cap Removed from Engine Cut-Off Switch

Set multimeter to Ω.

Connect test probes to engine cut-off switch and its connector as per tables and measure resistance.

| ENGINE CUT-OFF SWITCH | | |
|---|---|---|
| PROBE WIRES | | RESISTANCE Ω @ 20°C (68°F) |
| GREEN/BLACK | WHITE/BLACK | Open circuit |

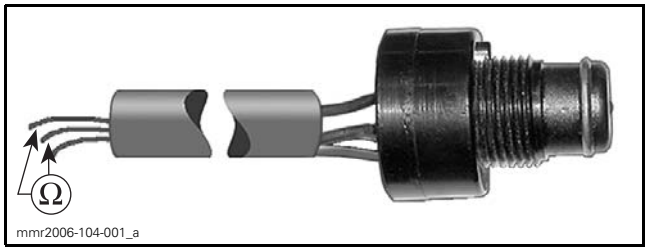


*TYPICAL*

| ENGINE CUT-OFF SWITCH | | |
|---|---|---|
| PROBE | | RESISTANCE Ω @ 20°C (68°F) |
| WHITE/ GRAY | Switch center contact | Close to 0 Ω |

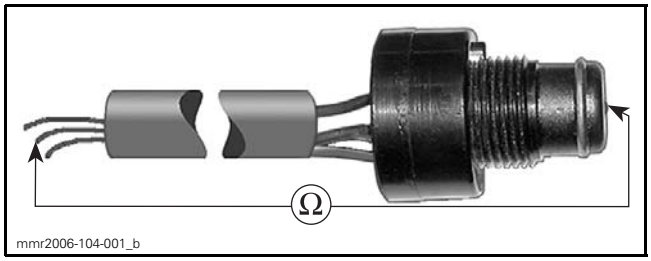


*TYPICAL*

| ENGINE CUT-OFF SWITCH | | |
|---|---|---|
| PROBE | | RESISTANCE Ω @ 20°C (68°F) |
| GREEN/BLACK | Switch ring | Close to 0 Ω |

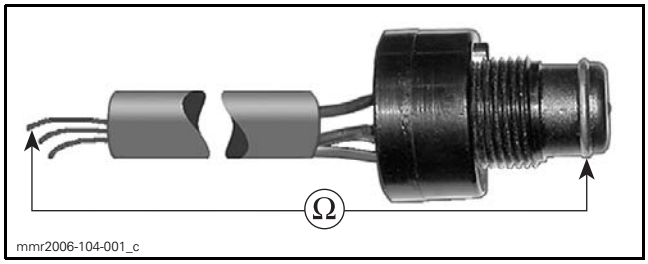


*TYPICAL*

### Tether Cord Cap on Engine Cut-Off Switch

Connect test probes to engine cut-off switch connector as per table and measure resistance.

| ENGINE CUT-OFF SWITCH | | |
|---|---|---|
| PROBE WIRES | | RESISTANCE Ω @ 20°C (68°F) |
| GREEN/BLACK | WHITE/BLACK | Close to 0 Ω |

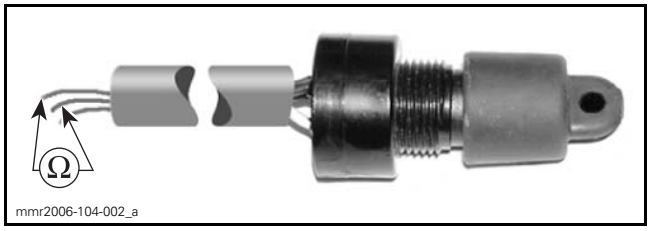


*TYPICAL*

If any resistance test fails, replace engine cut-off switch.

## Engine Cut-Off Switch Vehicle Harness Continuity Test

Disconnect engine cut-off switch connector.

Disconnect ECM connector B. Refer to *ELECTRONIC FUEL INJECTION* subsection.

Check wire continuity between engine cut-off switch connector of main wiring harness and ECM as follows.

| TOOL | TOOL VIEW |
|---|---|
| ECM ADAPTER TOOL (P/N 529 036 166) |  |

| ENGINE CUT-OFF SWITCH CONNECTOR (MAIN WIRING HARNESS SIDE) | ECM ADAPTER | RESISTANCE Ω @ 20°C (68°F) |
|---|---|---|
| WIRE | PIN | |
| WHITE/GRAY (3) | B-2B | Close to 0 Ω |
| WHITE/BLACK (1) | B-4E | |
| GREEN/BLACK (2) | B-2F | |

If any continuity test failed, repair or replace wiring connectors/terminals.

If the problem persists and all tests have been performed, check the ECM. Refer to *(ENGINE CONTROL MODULE ECM)* in the *ELECTRONIC FUEL INJECTION (EFI)* subsection.

# IGNITION SYSTEM (900 ACE AND 900 ACE TURBO)

## SERVICE TOOLS


| Description | Part Number | Page |
|---|---|---|
| D.E.S.S. POST REMOVER | 529 035 943 | 257 |
| FLUKE 115 MULTIMETER | 529 035 868 | 255 |


## GENERAL

The following tool is required to test most of the electrical parts.

| REQUIRED TOOL | |
|---|---|
| FLUKE 115 MULTIMETER (P/N 529 035 868) |  |

**⚠ WARNING**

**Torque wrench tightening specifications must be strictly adhered to.**
**Locking devices when removed (e.g.: locking tabs, elastic stop nuts, self-locking fasteners, cotter pins, etc.) must be replaced.**

Hoses, cables or locking ties removed during a procedure must be reinstalled as per factory standards.

**⚠ WARNING**

**Never check for engine ignition spark from an open coil and/or spark plug as spark may cause potential fuel vapors to ignite. Always use an approved spark tester.**

## SYSTEM DESCRIPTION

The ignition system is a digital inductive type (IDI) system.

Ignition system parameters such as ignition timing, spark duration, and firing order, as well as many other engine related functions are controlled by the engine management system (EMS) in order to meet engine operational requirements. The EMS can detect many abnormalities including a short circuit in the primary winding of the ignition coils as well as its associated circuits.

Three direct ignition coils receive power from the fuse F5.

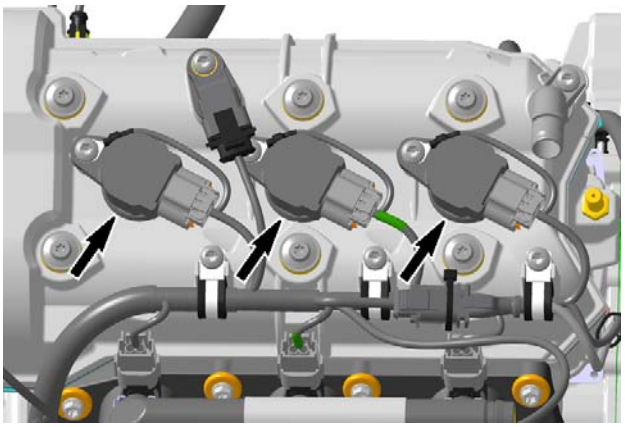

tmr2017-019-001_b

*IGNITION COILS*

When a ground signal is provided by the ECM to an ignition coil primary winding, a high voltage is induced in the coil secondary winding that is used to produce a spark at the spark plug electrode.

Cylinder 1 is located on the PTO side of the engine. Each cylinder is identified by a number on cylinder block housing.

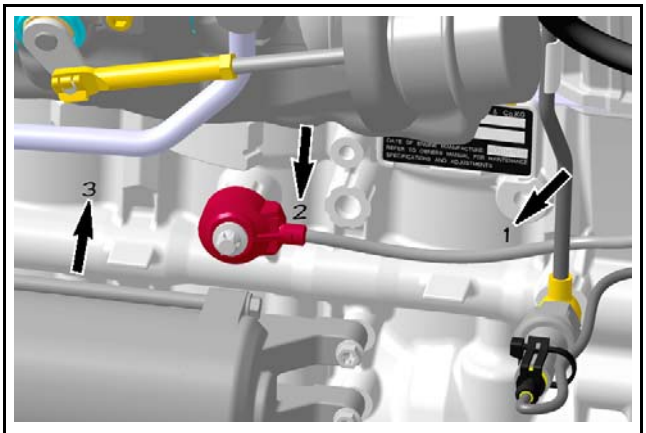


tmr2017-034-001_a

*CYLINDER BLOCK - EXHAUST SIDE*

### Ignition Timing

Ignition timing is not adjustable.

The ECM is programmed with data (ignition mappings) that it uses to establish optimum ignition timing under all engine operating conditions.

It receives signals from a variety of sensors that it compares with the ignition mappings and uses it to control the ignition spark timing, duration and firing order.

The firing of each spark plug is independent of the others.

### Engine RPM Limiter

The ECM will limit the maximum engine speed by cutting off ignition spark and fuel at a predetermined engine RPM.

| | |
|---|---|
| ENGINE SPEED LIMITER SETTING | 8300 RPM |

### Knock Sensor

A knock sensor is mounted on the cylinder block below the exhaust manifold. It detects specific vibrations that would typically be generated by engine detonation.

If detonation occurs, the knock sensor detects it and the ECM goes into a specific operating mode whereby it temporarily retards the ignition advance until detonation stops.

The ECM is able to identify in which cylinder the knocking occurs and modifies the ignition advance on that cylinder only.

Refer to the *ELECTRONIC FUEL INJECTION (EFI)* subsection for testing and replacement procedures.

# TROUBLESHOOTING

It is good practice to check for fault codes using the BUDS2 as a first troubleshooting step. Refer to *DIAGNOSTIC AND FAULT CODES* subsection.

Refer to *POWER DISTRIBUTION AND GROUNDS* for fuses and relay information.

Always refer to the *WIRING DIAGRAM* when troubleshooting an electrical circuit.

## IGNITION SYSTEM TESTING

The ECM controls the ignition system.

If a fault is detected by the ECM, the check engine light will turn on.

The ECM can detect a problem on the primary winding or circuit of the ignition coils.

The secondary winding of the ignition coils is not monitored by the ECM.

Other sensors in relation with the ignition system are also monitored by the ECM.

### Testing Ignition System

Check for fault codes using BUDS2 software as a first troubleshooting step. Refer to *DIAGNOSTIC SYSTEM AND FAULT CODES* subsection.

Ensure fuse F5 and relay are powered and in good condition.

If a fuse is burnt, test for a short circuit or faulty component on that fuse circuit before replacing the fuse.

Check ignition spark, refer to *TESTING THE IGNITION COIL WITH BUDS2.* in this subsection.

## DIAGNOSTIC GUIDELINES

The following is provided to help in diagnosing the probable cause of a problem. It is a guideline and should not be assumed to list all possible causes.

### ENGINE WILL NOT STOP WHEN REMOVING KEY FROM D.E.S.S. POST

1. Defective D.E.S.S. post
   - *Check D.E.S.S. post. Replace if necessary.*

### ENGINE WILL NOT START (ENGINE TURNS OVER)

1. Fouled or defective spark plug
   - *Check spark plug condition. Replace if necessary.*
2. Defective CPS
   - *Test CPS, refer to ELECTRONIC FUEL INJECTION (EFI) subsection.*
3. Defective trigger wheel
   - *Check. Refer to MAGNETO AND STARTER subsection.*
4. Defective ignition circuit
   - *Check fuses, ignition coils, wiring and connectors.*

### ENGINE HARD TO START

1. Faulty, fouled or worn out spark plug
   - *Check spark plug condition. Replace if necessary.*
2. Drowned engine
   - *Check engine temperature value using B.U.D.S.2 measurements page. If the temperature read is lower than the ambient temperature, CTS sensor may be defective or have a bad connection. Therefore, the ECM would erroneously set the engine in cold start mode and it could flood the spark plugs.*

### ENGINE MISFIRES, RUNS IRREGULARLY

1. Fouled, defective, worn spark plugs
   - *Check spark plug condition. Replace if necessary.*
2. Damaged trigger wheel/loose CPS
   - *Check. Refer to MAGNETO AND STARTER subsection.*
3. Defective ignition circuit
   - *Check fuses, ignition coils, wiring and connectors.*
4. Poor engine grounds
   - *Check ground condition, refer to POWER DISTRIBUTION AND GROUNDS subsection.*

### ENGINE CONTINUALLY BACKFIRES

1. Fouled, defective spark plugs
   - *Check spark plug condition. Replace if necessary.*
2. Damaged trigger wheel/defective or loose CPS
   - *Check, refer to MAGNETO AND STARTER and ELECTRONIC FUEL INJECTION (EFI) subsections.*

### ENGINE DETONATION OR PINGING

1. Faulty or disconnected knock sensor
   - *Check, refer to ELECTRONIC FUEL INJECTION (EFI) subsection.*

### ENGINE LACKS ACCELERATION OR POWER

1. Weak spark
   - *Check spark plugs, coils, wiring and connections.*

# PROCEDURES

## D.E.S.S. POST

### Testing Continuity of D.E.S.S. post

Refer to *RADIO FREQUENCY DIGITALLY ENCODED SECURITY SYSTEM (RF D.E.S.S.)* subsection.

### Replacing the D.E.S.S. post

| REQUIRED TOOL | |
|---|---|
| D.E.S.S. POST REMOVER (P/N 529 035 943) |  |

## START/STOP BUTTON

### Start/stop Button Wire Identification

| FUNCTION | PIN |
|---|---|
| 12 volt input from F1 | 1 |
| 12 volt output to ECM-B pin D1 | 2 |

### Start/Stop Button Test with BUDS2

Connect to BUDS2 software. Refer to *COMMUNICATION TOOLS AND B.U.D.S.* subsection.

Select the **Measurements** and **ECM** tabs.

Press the vehicle's start button and look at the **Start Button** LED.

It should turn on, indicating the start signal reaches the ECM.

If it does not turn on, check the start button and wiring.

### Start/Stop Button Resistance Test

Disconnect start/stop button connector.

Using a multimeter, measure resistance as per the following table.

| POSITION | START BUTTON CONNECTOR PIN | | RESISTANCE |
|---|---|---|---|
| Switch released | 1 | 2 | Infinite (OL) |
| Switch depressed and held | | | 0.6 Ω max. |

Replace start/stop button if defective.

# IGNITION SYSTEM (E-TEC)

## SERVICE TOOLS

| Description | Part Number | Page |
|---|---|---|
| DIAL INDICATOR ADAPTER | 529 036 132 | 262 |
| DIAL INDICATOR ADAPTER | 529 036 418 | 262 |
| TDC DIAL INDICATOR | 295 000 143 | 262 |
| TDC DIAL INDICATOR | 414 104 700 | 262 |

## GENERAL

**⚠ WARNING**

**Always electrically disconnect both fuel injectors prior to testing for ignition spark. Otherwise, fuel vapors may ignite in presence of a spark creating a fire hazard.**

## SYSTEM DESCRIPTION

This ignition system is an inductive type specifically designed for the E-TEC engine with a rapid rise time to prevent spark plug fouling. It provides a quick spark with a long duration.

The ignition system is fully managed by the ECM which controls the ignition system parameters such as spark timing, dwell time, and firing order.

The system uses two separate ignition coils which induce high voltage in their secondary winding to produce a spark at each spark plug independently.

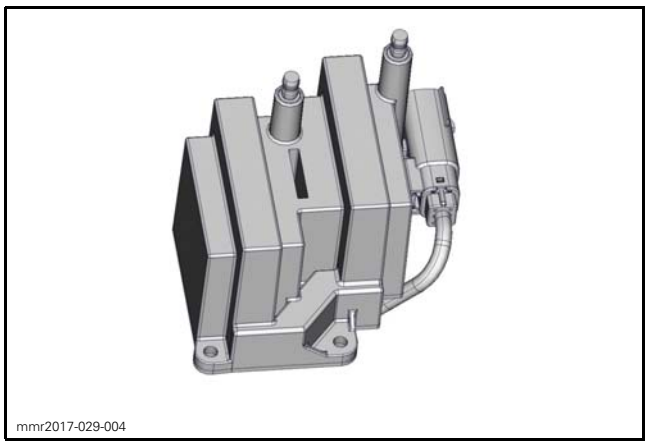
mmr2017-029-004

The ignition coils receive power from the 55 Vdc system. Their operating voltage varies from 20 to 55 Vdc.

### Ignition System Basic Operation

Each ignition coil uses an active circuitry to energize the primary winding when it receive a pulse from the ECM. The pulse has an amplitude of approximately 10 volts. At the end of the dwell time, the power is released from the primary winding which induces a current that produces a high voltage in the secondary winding. This high voltage is then fed to the spark plug.

A resistive core spark plug cable is used to prevent the RFI (Radio Frequency Interference). There is no resistor in the spark plug cap.

### Spark Plugs

The OEM spark plug used is specially indexed for optimum engine operation and efficiency.

The threads on the spark plug and in the cylinder head are indexed so that when the plug is installed, the open end of the negative electrode will be facing the injection spray, within ± 90°. This ensures the negative electrode does not deviate the injection spray and ensures proper ignition.

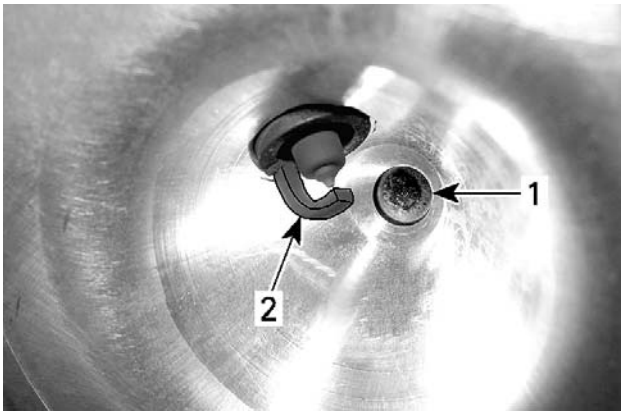

mmr2009-019-027_a

*CORRECTLY INDEXED*
1. *Injector nozzle*
2. *Ground electrode*

NOTE: Using an incorrectly indexed spark plug will result in poor idle and increased emissions.

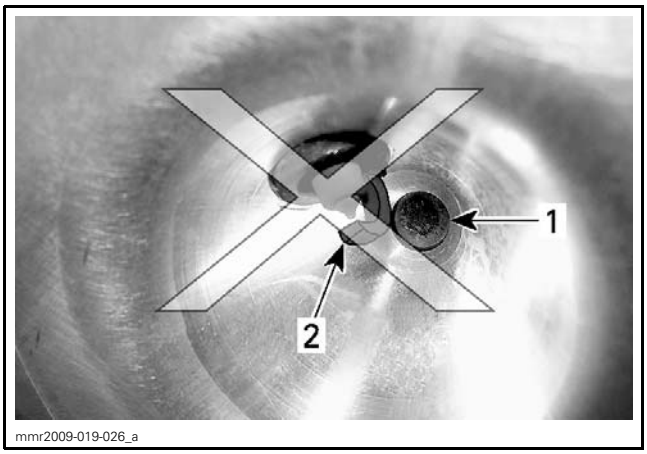


*INCORRECTLY INDEXED*
1. *Injector nozzle*
2. *Ground electrode*

If using a non OEM spark plug, a specific installation procedure must be followed. Refer to */INSTALLING THE SPARK PLUGS (NON-OEM)* in this subsection.

### Ignition Timing

The crankshaft position sensor (CPS), the air pressure sensor (MAPTS) and the throttle position sensor (TPS) are the primary sensors used to control the ignition timing.

The ECM is programmed with data (ignition mappings). Using feedback provided by the sensors, the ECM controls the ignition timing for optimum engine operation under all operating conditions.

Ignition timing can be adjusted using BUDS2.

### Knock Detection

The knock sensor detects specific vibration that would be typically generated by engine detonation.

If detonation occurs, the ECMs retards the ignition and increases the fuel injected temporarily (it goes into a specific operating mode) until detonation stops.

# ADJUSTMENT

## UNDERSTANDING THE TDC GAUGE

Dial gauges can be either in imperial or metric units. It is crucial to identify gauge units and graduation.

### Imperial Dial Gauge

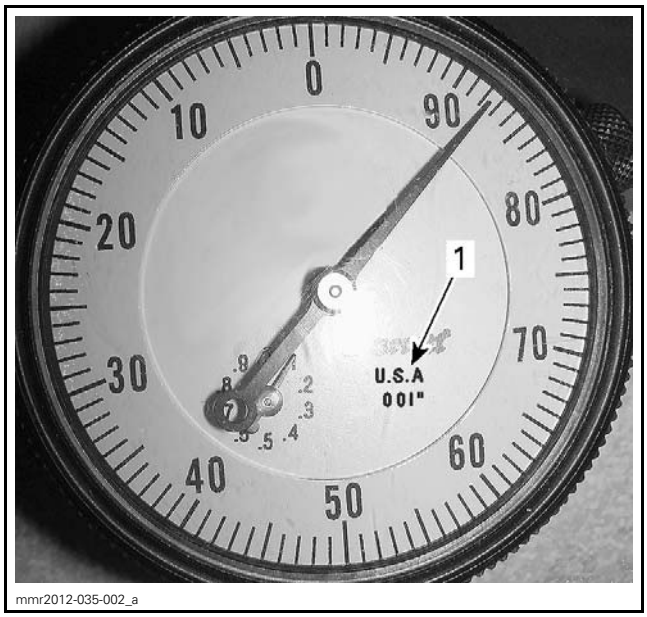


*IMPERIAL GAUGE EXAMPLE*
1. *001 inch means it is graduated each 1/1000 inch*

| TYPICAL IMPERIAL DIAL GAUGE | | |
|---|---|---|
| GRADUATION | MEASURE PER NEEDLE TURN | MEASURE EXAMPLE: .128 INCH |
| 1/1000 inch (.001) per graduation line | 1 turn = .100 inch | 1 complete turn + 28 graduation lines |

NOTE: The small dial indicates the number of turns the long needle traveled around the main dial.

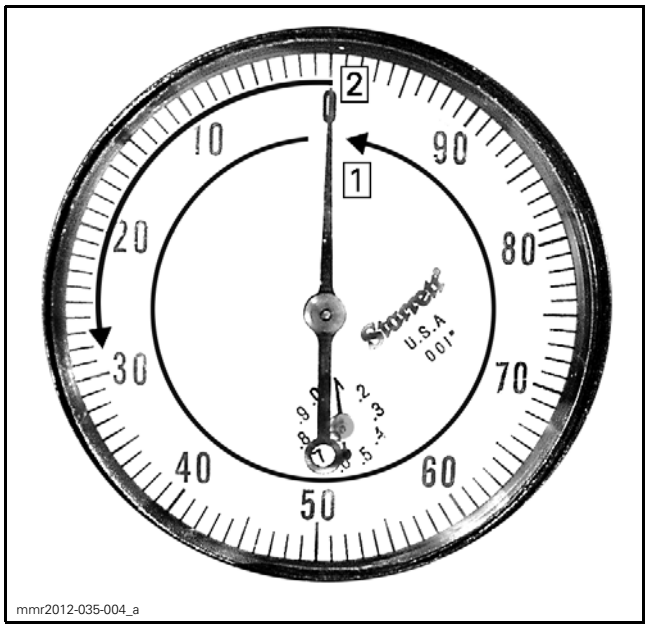


*.128 INCH AS AN EXAMPLE*
*Step 1: 1 complete turn*
*Step 2: 28 lines*

## Metric Dial Gauge

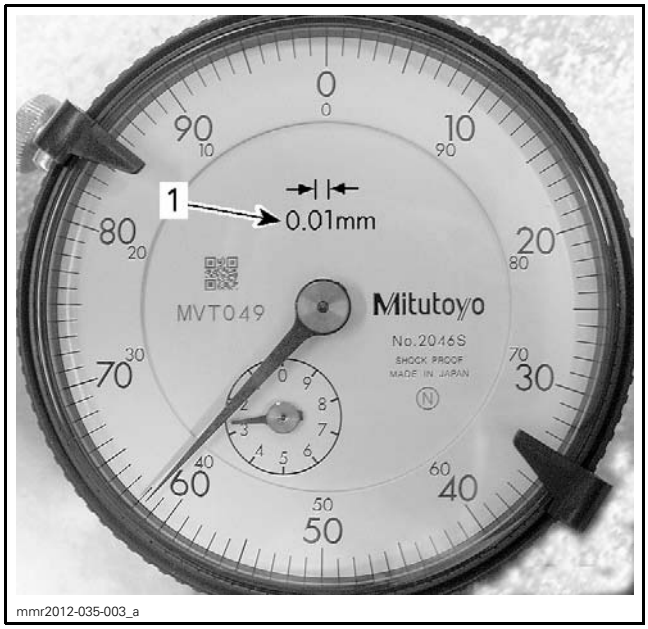


*METRIC GAUGE EXAMPLE*
*1. 0.01 mm means its graduated each 1/100 millimeter*

| METRIC DIAL GAUGE EXAMPLE | | |
|---|---|---|
| GRADUATION | MEASURE PER NEEDLE TURN | MEASURE EXAMPLE: 3.25 mm |
| 1/100 millimeter (.01) per graduation line | 1 turn = 1 millimeter | 3 complete turns + 25 graduation lines |

NOTE: The small dial indicates the number of turns the long needle traveled around the main dial.

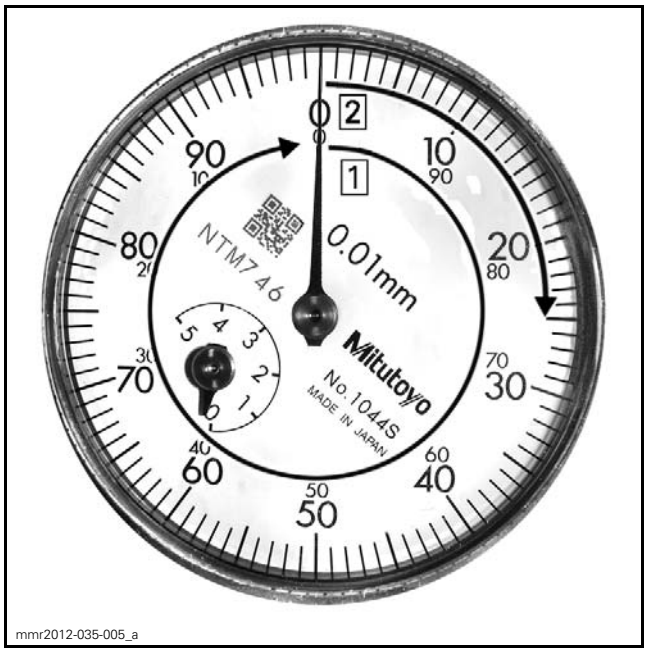


*3.25 mm AS AN EXAMPLE*
*Step 1: Complete turns (3 X)*
*Step 2: 25 lines*

# IGNITION TIMING

Normally, ignition timing adjustments should not be required. It has been set at the factory and should remain correctly adjusted as every component is fixed and non adjustable.

The only time the ignition timing may require adjustment is when replacing the:
- Crankshaft
- Magneto flywheel
- CPS
- ECM.

Adjustment procedure summary:
- TDC Gauge Installation
- Locating Piston TDC
- Scribing the timing marks
- Checking Ignition timing
- Adjusting timing.

If the ignition timing is incorrect, first check for proper crankshaft alignment. This might be an indication of a twisted crankshaft. Refer to *BOTTOM END* subsection.

## Installing the TDC Gauge

**⚠ WARNING**

**Ensure tether cord is removed from engine cut-off switch and emergency engine stop switch is in the STOP position.**

Two TDC gauges can be used:

| TDC GAUGES | |
|---|---|
| **Preferred Gauge**<br>TDC DIAL INDICATOR<br>(P/N 295 000 143)<br>**(short reach)** |  |
| TDC DIAL INDICATOR<br>(P/N 414 104 700)<br>**(long reach)** |  |

### Preparing the Gauge

| REQUIRED TOOL | |
|---|---|
| Rounded tip from DIAL INDICATOR ADAPTER (P/N 529 036 132) |  |

1. Remove the roller tip from the gauge.
2. Use the rounded tip from the adapter.

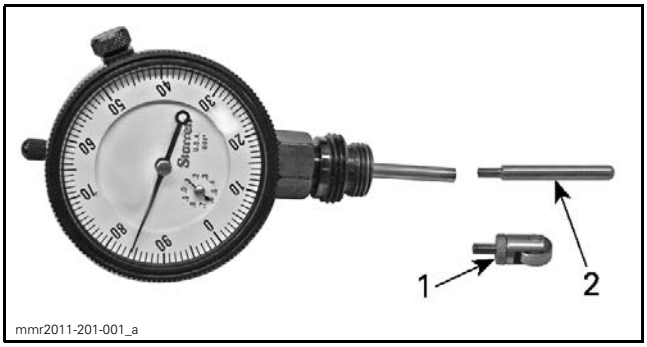


*1. Roller tip removed*
*2. Rounded tip to install*

3. Install the rounded tip on the gauge.

### Installing the Gauge

| REQUIRED TOOL | |
|---|---|
| DIAL INDICATOR ADAPTER (P/N 529 036 418) |  |

1. Remove the direct injectors, refer to *E-TEC DIRECT FUEL INJECTION* subsection.
2. Install the dial indicator adapter over the PTO injector hole.
3. Use two screws M8 x 1.5 x 35 to secure the adaptor.
4. Carefully insert the TDC gauge through the dial indicator adapter hole.

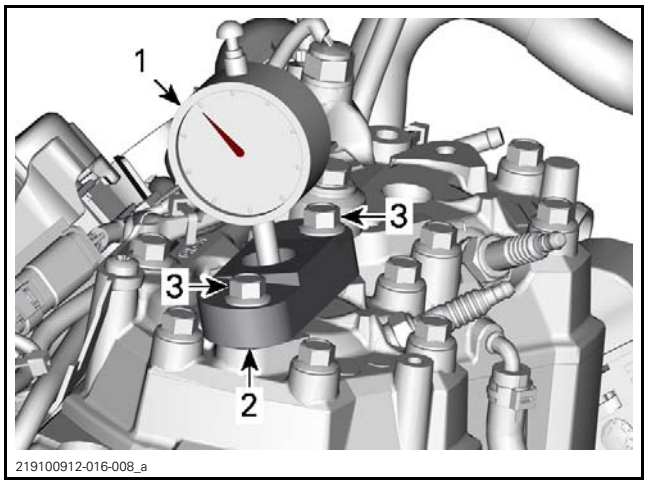


*TYPICAL*
*1. TDC gauge*
*2. Dial indicator adaptor*
*3. Screws*

5. Screw the gauge into the adapter plate with the dial face towards the PTO and tighten it sufficiently to prevent movement.

## Locating Piston TDC

NOTE: Normal engine rotation as seen from the PTO side is counterclockwise.

1. With a firm hold on the drive pulley, slowly rotate the drive pulley counterclockwise while observing the TDC gauge needle.

NOTE: Note that the needle stops moving only as the piston is changing direction at the top of its stroke.

2. Rotate the dial face so the "0" is in line with the needle when it stops moving.
3. Resume rotating the engine in the same direction (counterclockwise) until the gauge needle has rotated approximately 1/4 turn past TDC.
4. Then slowly rotate the engine in a clockwise direction until needle stops moving.

NOTE: The needle should stop on the "0". If not, reset the dial "0" to the needle.

5. Again, slowly rotate the drive pulley back and forth across TDC and confirm the needle always stops exactly at "0" before changing direction. "0" now indicates exact TDC.
6. Lock the dial face with the dial lock screw.

NOTE: If a difference in "0" setting the dial in each direction of rotation is easily noticeable, the engine components may suffer from excessive wear. The engine may require further inspection and maintenance.

## Scribing the Timing Mark

IMPORTANT: Make sure to understand the TDC gauge functioning. Refer to *UNDERSTANDING THE TDC GAUGE* in this subsection.

1. From the "0" (TDC), rotate the drive pulley clockwise (backwards engine rotation) until the dial needle rotates past the BTDC specification (see table below).

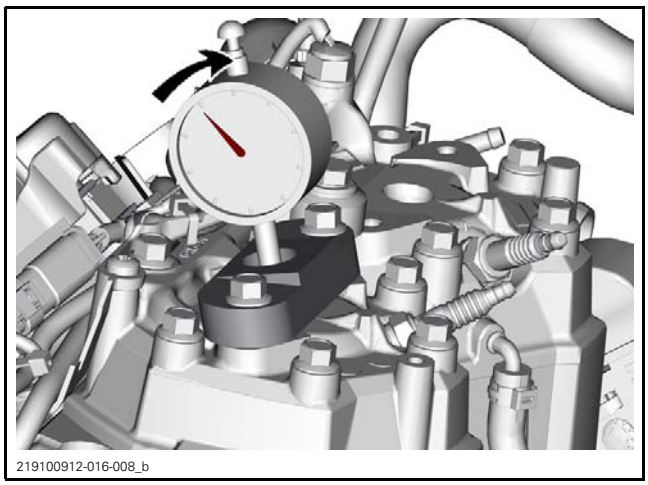


*TYPICAL - PASS THE BTDC SPECIFICATION*

2. Then carefully rotate engine forward until needle precisely points the measurement specified in the table.

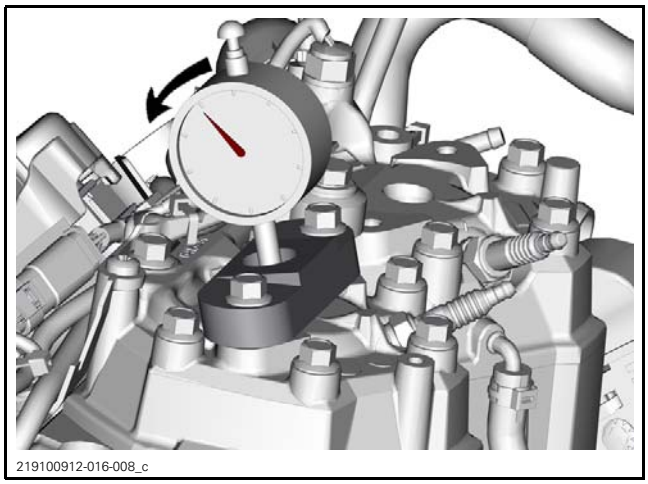


*TYPICAL - BRING DIAL NEEDLE TO THE BTDC SPECIFICATION*

NOTE: Final setting must always be made in the normal engine rotation.

| IGNITION TIMING BTDC | | |
|---|---|---|
| ENGINE | BTDC SPECIFICATION | DEGREE SETTING BTDC |
| 850 E-TEC | 5.98 mm (.235 in) | 28° |
| 600R E-TEC | 5.39 mm (.212 in) | |

3. With the TDC gauge indicating specified timing, draw the reference mark and timing mark:
   - 3.1 Stick a piece of tape on the driven pulley bearing support.
   - 3.2 Use a permanent marker.
   - 3.3 Draw a line on the tape as a reference mark.
   - 3.4 Draw the timing mark on the drive pulley fixed sheave in line with the reference mark.

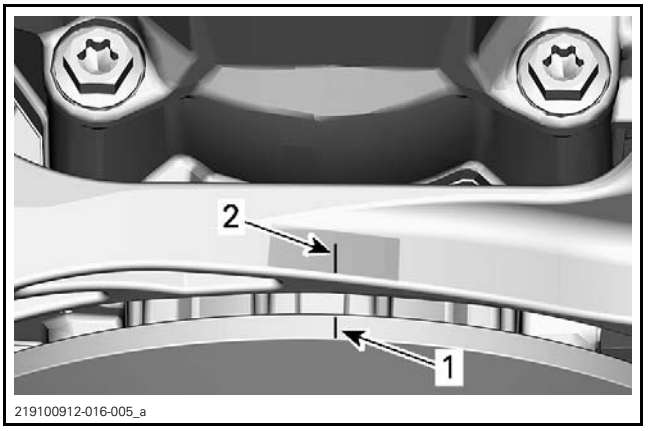


*TYPICAL*
*1. Timing mark on fixed sheave*
*2. Timing mark on a tape, on driven pulley bearing support*

4. Repeat the procedure to ascertain the marks are exactly aligned.
5. Remove the TDC gauge and dial indicator adapter.
6. Reinstall the fuel injector. Refer to *E-TEC DIRECT INJECTION* subsection.
7. Reconnect magneto connector.
8. Check ignition timing as per applicable procedure in this subsection.

## Checking Ignition Timing

The ignition timing can be checked with either the engine hot or cold at the specified RPM.

| ENGINE SPEED FOR IGNITION TIMING CHECK |
|---|
| ENGINE RPM |
| 2500 to 4000 (1) |
| (1) In this range, the spark advance does not change during the procedure. |

To check the ignition timing proceed as follows:

**⚠ WARNING**

**Place ski tips against a wall, raise rear of vehicle on a stand, so that track does not contact the ground. Do not allow anyone in front of or behind the vehicle while engine is running. Keep clear of track and do not wear loose clothing which can get caught in moving parts.**

1. Connect the timing light pick-up to the **PTO** spark plug cable.

NOTE: Be careful to route timing light cable away from drive belt and pulleys.

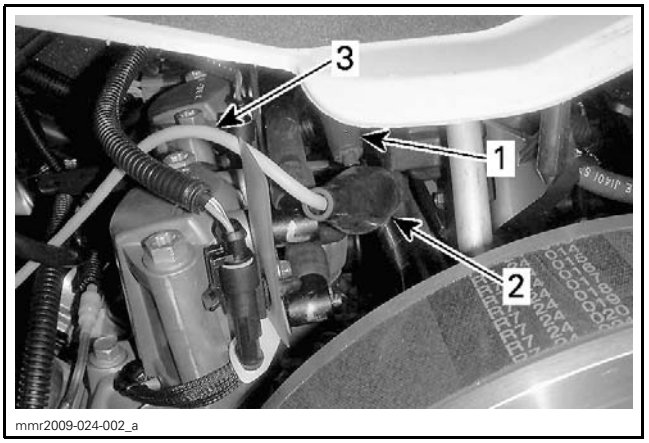

mmr2009-024-002_a

*TYPICAL — TIMING LIGHT CONNECTION*
1. *PTO spark plug cable*
2. *Timing light connection to PTO plug cable*
3. *Timing light wire routing*

2. Connect the vehicle to the BRP diagnostic software (BUDS2).
3. Start engine and let idle.
4. In BUDS2, go to:
   - **Settings** page
   - **Vehicle** or **ECM** button
   - **Settings** tab
   - **Initializations - Ignition/Injection Timing**

NOTE: Timing will be frozen on the PTO cylinder only for RPM stability. RPM will be limited to 4000 RPM.

5. Point the timing light on the timing mark and increase engine to **3500 RPM** for a brief instant.
6. The timing mark must be aligned with the pointer end within the specified tolerance.

| TOLERANCE |
|---|
| ± 0.5° |

If timing mark and pointer are aligned, no adjustment is required.

If they are not aligned, note if timing is retarded or advanced, see following illustrations. Then, adjust timing as described in *ADJUSTING TIMING* further in this subsection.

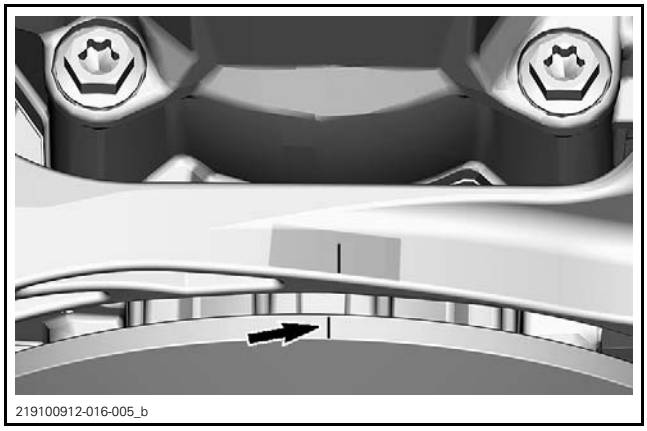
219100912-016-005_b

*TYPICAL — TIMING RETARDED BY ABOUT 1°*

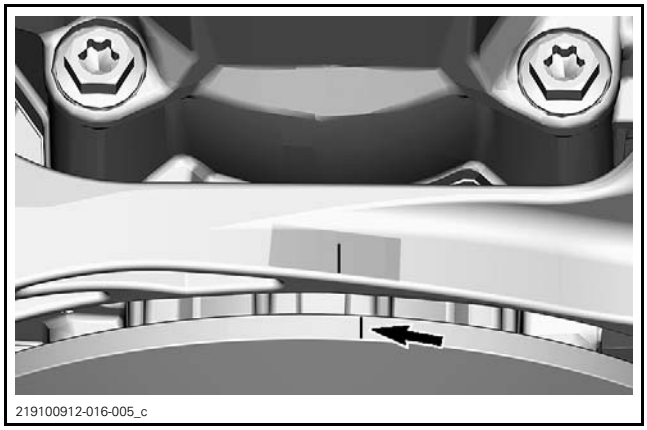
219100912-016-005_c

*TYPICAL — TIMING ADVANCED BY ABOUT 2°*

## Adjusting Timing

1. In the **Ignition/Injection Timing** area on the **Settings** page, select **Advance** or **Retard** to change the ignition timing.

NOTE: Timing will be changed in 0.5° increments.

2. Adjust the timing using the appropriate button until the timing mark is in line with the pointer, within 0.5°.
3. Unfreeze ignition timing.
4. Click **Close** button to store the ignition timing correction.

5. Shut down engine.
6. Restart engine and press the **Scan** icon in BUDS2.
7. Recheck timing to ensure ignition timing adjustment was properly stored in the ECM.
8. Increase engine RPM past 4000 RPM to ascertain the **Freeze Timing** function is no longer active.

NOTE: The **Freeze Timing** function automatically disengages when the engine is stopped.

9. Remove all tools.

# TROUBLESHOOTING

## IGNITION SYSTEM TESTING SEQUENCE

It is good practice to check for fault codes using the BRP diagnostic software BUDS2 as a first troubleshooting step. Refer to the *DIAGNOSTIC AND FAULT CODES* subsection.

In the case of ignition problems, check the following in the prescribed order until the problem can be solved:

1. Spark plugs
2. Spark plug cables
3. Wiring harness/electrical connectors
4. Emergency engine stop switch
5. Ignition cut-off switch
6. Ignition coil(s)
7. CPS
8. ECM (Engine Control Module).

If engine idles roughly or shows signs of increased emissions, the spark plugs may be incorrectly indexed. Refer to *INSTALLING THE SPARK PLUG* in this subsection.

# PROCEDURES

## SPARK PLUGS

For spark plug type, refer to *TECHNICAL SPECIFICATIONS* subsection.

### Replacing the Spark Plug

NOTE: Use only an approved spark plug socket for removal and installation. Extra care should be taken to avoid side stresses which could result in a broken spark plug.

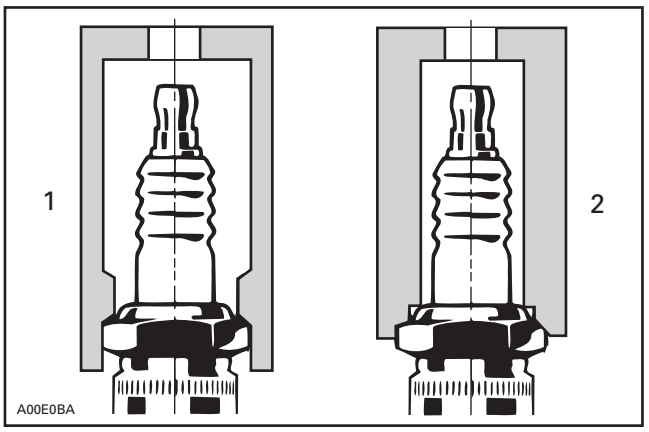


*TYPICAL*
*1. Approved socket*
*2. Improper socket*

### Removing the Spark Plugs

1. Disconnect the stator connector. Refer to *STATOR CONNECTOR ACCESS* in the *MAGNETO AND STARTER* subsection.
2. Remove the upper body module. Refer to *BODY* subsection.
3. Clean the spark plug and cylinder head with pressurized air.
4. Remove lock securing spark plug wire to spark plug.

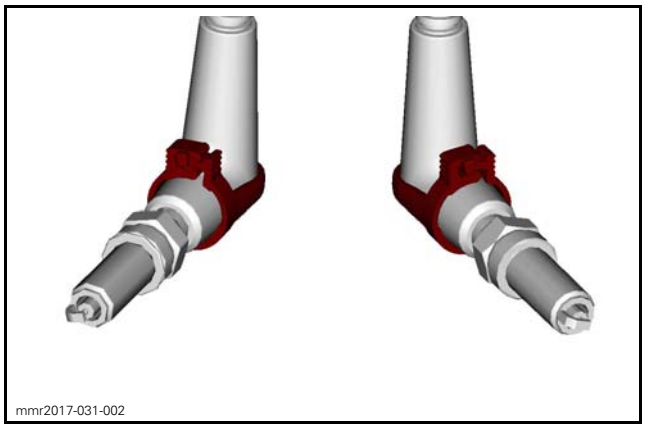


5. Remove spark plug cables by gently rotating the cap and pulling it off the plug.

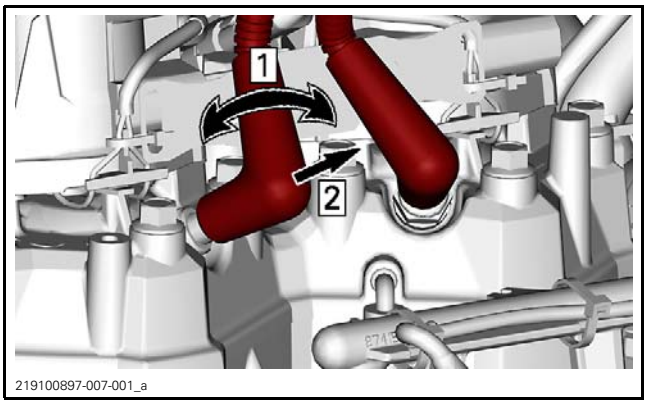


*TYPICAL*
*Step 1: Gently rotate*
*Step 2: Pull off*

6. Unscrew the spark plug sufficiently to break the applied torque using the appropriate tools.




7. Remove spark plugs by hand.

### Installing the Spark Plugs (OEM)

1. Prior to installation, ensure the contact surfaces of the cylinder head and spark plug are free of grime.
2. Lubricate contact surface of spark plug at the cylinder head.

| SERVICE PRODUCT |
|---|
| Injection oil |

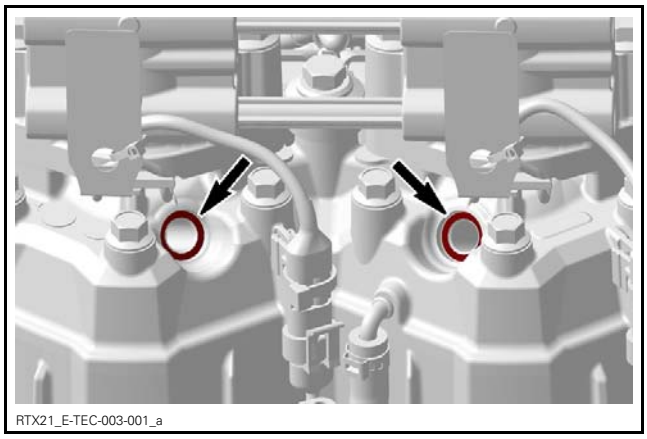


3. Using a wire gauge, confirm electrode gap is as specified. Refer to *TECHNICAL SPECIFICATIONS*.

NOTE: If spark plug gap is incorrect, use another spark plug.

4. Hand screw spark plug into cylinder head until it bottoms out.
5. Apply specific torque using a torque wrench and approved spark plug socket.

NOTE: Spark plug tightening torque is particularly important on this engine as it contributes to the proper positioning of the negative electrode.

| TIGHTENING TORQUE | |
|---|---|
| Spark plug | 23 N•m ± 1 N•m<br>(17 lbf•ft ± 1 lbf•ft) |

### Installing the Spark Plugs (Non-OEM)

NOTE: When using a non-OEM spark plug , it must be correctly indexed or engine may experience rough idling and higher emissions.

1. Using a marker, mark the open end of the negative electrode on the plug shell (above threads).
2. Ensure the contact surfaces of the cylinder head and spark plug are free of grime.
3. Lubricate contact surface of spark plug at the cylinder head.

| SERVICE PRODUCT |
|---|
| Injection oil |

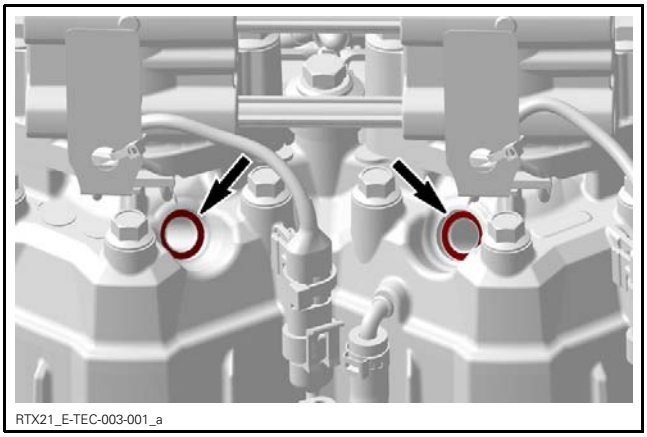
RTX21_E-TEC-003-001_a

4. Install and torque the spark plug, refer to previous table for specific torque.
5. Visually check to ensure the open end of the negative electrode is facing the injector nozzle within 90° each side of nozzle.

NOTE: The following illustration uses the point of attachment of the negative electrode to depict the angle. The injector is illustrated above the spark plug.

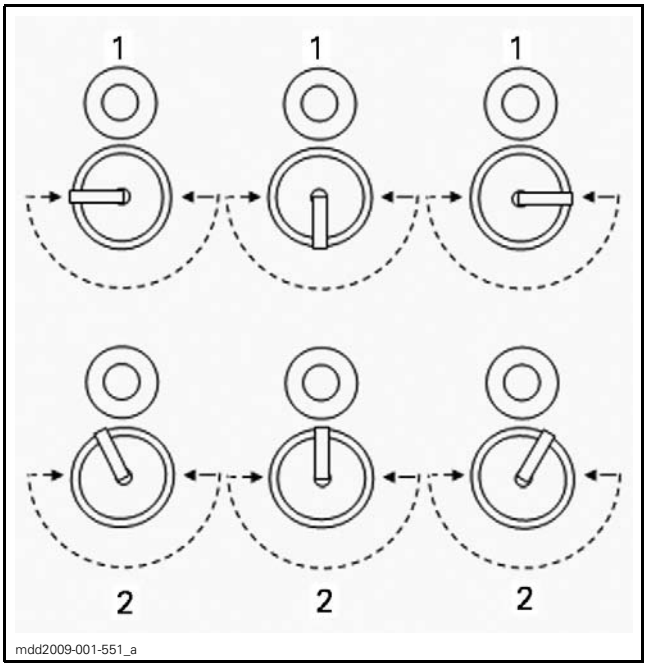

mdd2009-001-551_a

*SPARK PLUG INDEXING*
*1. Acceptable installation*
*2. Unacceptable installation*

If the plug indexing angle is not within specification, repeat procedure with another spark plug until correct indexing is achieved.

# SPARK PLUG CABLES

**NOTICE** Do not interchange spark plug cables. The lower LH coil must be matched to the PTO spark plug.

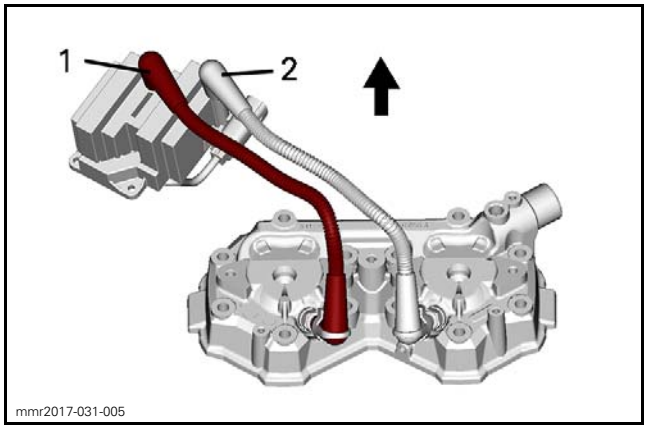

mmr2017-031-005

*ARROW POINTS TO FRONT OF VEHICLE*
*1. PTO side*
*2. MAG side*

## Measuring Spark Plug Cable Resistance

If the spark plug cables are in good condition, carry out the following resistance test.

1. Remove each spark plug cable from its ignition coil and spark plug.
2. Insert a probe in each cable end and measure the resistance.

| SPARK PLUG CABLE SPECIFICATION |
|---|
| 2160 – 6870 Ω |

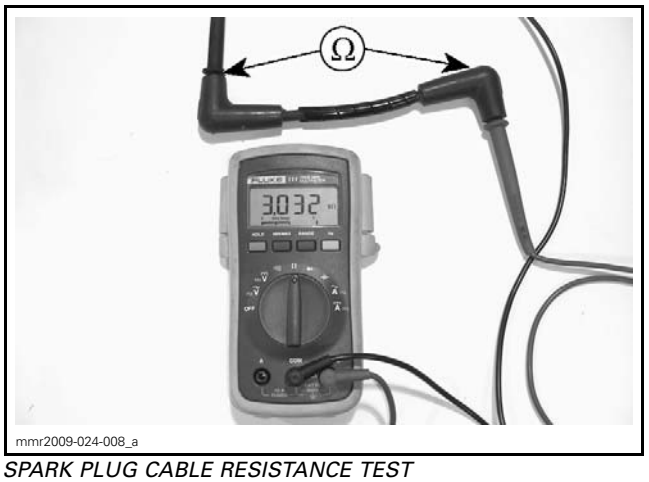

mmr2009-024-008_a

*SPARK PLUG CABLE RESISTANCE TEST*

If resistance is not as specified, replace spark plug cable.

# EMERGENCY ENGINE STOP SWITCH

## Emergency Engine Stop Switch Operation

The emergency engine stop switch provides a ground signal to the ECM when STOP is selected.

Refer to applicable *WIRING DIAGRAM* for details.

## Testing Emergency Engine Stop Switch

1. Disconnect STR 6P connector. For connector location, refer to *WIRING HARNESS AND CONNECTORS*.
2. Measure resistance as per following table.

| STR 6P CONNECTOR PIN | EMERGENCY ENGINE STOP SWITCH POSITION | SPECIFICATION |
|---|---|---|
| 3 and 6 | RUN | O.L. |
| | STOP | Close to 0 Ω (Continuity) |

NOTE: If emergency engine stop switch is unplugged, engine will start and run. If emergency engine stop switch is jumped, engine will stop.

# IGNITION COILS

## Testing for Spark

Ensure emergency stop switch is set to **run**.

NOTE: Use ONLY an approved inductive spark plug tester or a new spark plug to test for ignition spark. In-line (series connected) spark testers must not be used. Radio frequency interference (RFI) generated by the arcing current may cause erratic behavior in the ECM.

**⚠ WARNING**

**Always electrically disconnect both fuel injectors prior to testing for ignition spark. Otherwise, fuel vapors may ignite in presence of a spark, creating a fire hazard.**

1. Ensure emergency stop switch is set to **run**.
2. Install the inductive spark tester (or a new spark plug) on the spark plug cable **(Do not remove spark plugs installed on engine)**.
3. Activate ignition coil with BUDS2.
4. If no spark is produced, test ignition coil.
5. If a spark is produced, install new spark plugs in the engine and repeat the test to assure the new spark plugs are in good condition and functioning correctly.

## Testing Ignition Coils

1. Set emergency stop switch to **run**.
2. Backprobe the ignition coil connector and measure voltage as per following table.

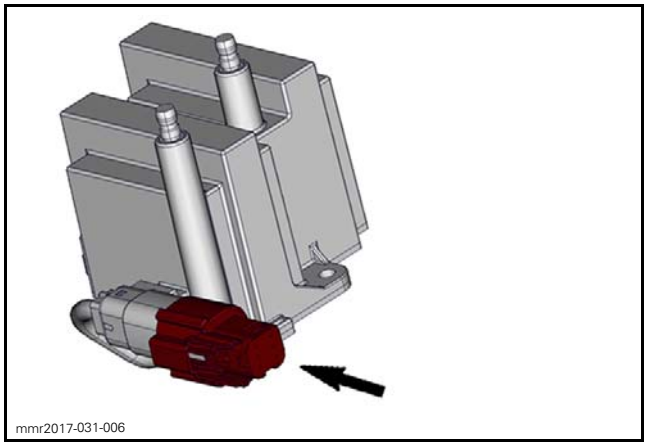
mmr2017-031-006

3. Use BUDS2 to activate ignition coil and measure the control signal.

| IGNITION COIL CONNECTOR | DESCRIPTION | SPECIFICATION |
|---|---|---|
| Pin 1 | Ground | Battery ground |
| Pin 2 | Control MAG | Vary when activated 0.015V-0.222V[1] |
| Pin 3 | 55 Volts | 40V engine off 55V engine running |
| Pin 4 | Ground | Battery ground |
| Pin 5 | Control PTO | Vary when activated 0.015V-0.222V[1] |
| Pin 6 | 55 Volts | 40V engine off 55V engine running |

[1] Control signal actually varies between 13 - 15 volts for 800 micro-seconds (DWELL time) but most multimeters cannot read it, it happens so fast.

4. If all inputs are as per specifications and there is no spark, replace ignition coil.
5. If a pin does not test as per specification, troubleshoot the affected wire continuity to ground or ECM. Refer to *WIRING DIAGRAM*.

## Removing Ignition Coil

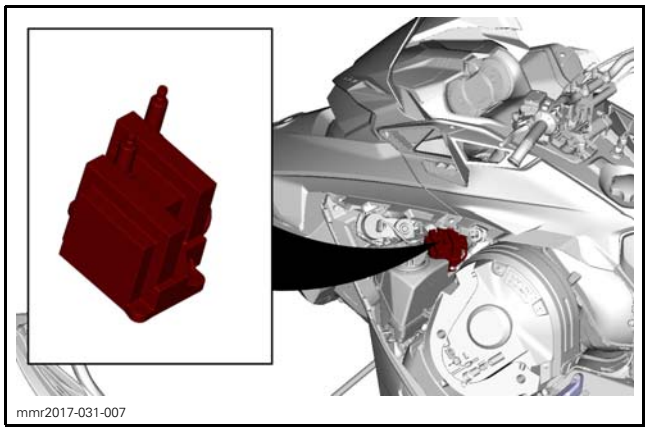
mmr2017-031-007

*TYPICAL*

1. Remove the left hand side panel.
2. Note position of spark plug cables and remove them from the spark plugs.

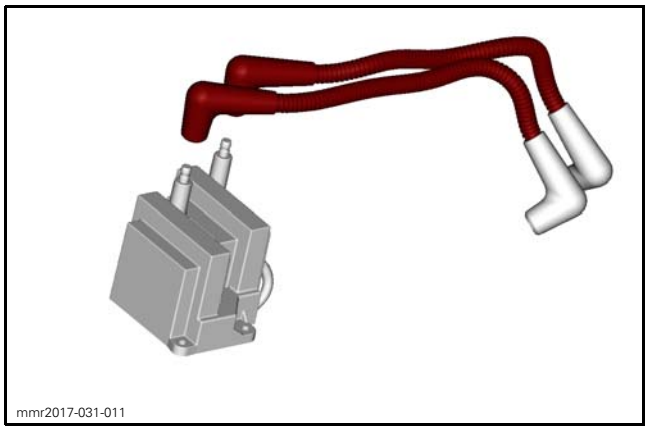
mmr2017-031-011

3. Unplug ignition coil connector.

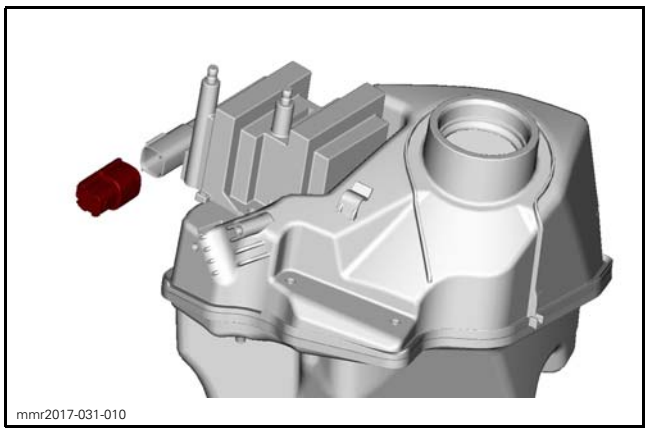
mmr2017-031-010

4. Remove retaining screws.

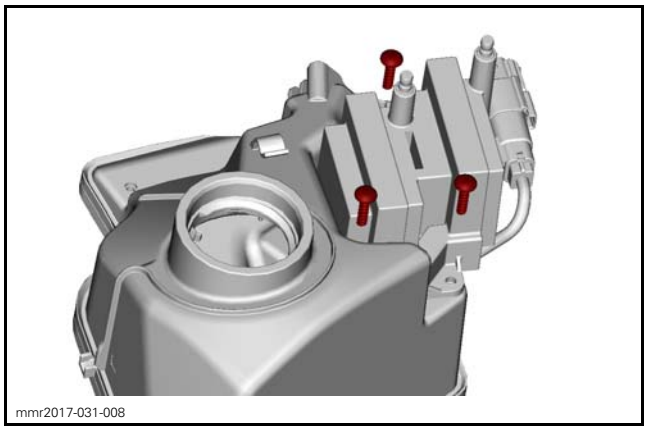
mmr2017-031-008

5. Remove ignition coil.

## Installing Ignition Coil

The installation is the reverse of the removal procedure. However, pay attention to the following.

| TIGHTENING TORQUE | |
|---|---|
| Ignition coil retaining screws | 2.4 N•m ± 0.2 N•m (21 lbf•**in** ± 2 lbf•**in**) |

# CHARGING SYSTEM (EFI AND E-TEC)

## SERVICE TOOLS


| Description | Part Number | Page |
|---|---|---|
| 12 V BATTERY SUPPLY CABLE | 529 035 997 | 275 |
| FLUKE 115 MULTIMETER | 529 035 868 | 276–277 |
| POWER INTERFACE | 515 177 223 | 275 |


## SERVICE TOOLS – OTHER SUPPLIER


| Description | Part Number | Page |
|---|---|---|
| NAPA ULTRA PRO BATTERY LOAD TESTER | 95260 | 273 |


# GENERAL

**⚠ WARNING**

**Unless otherwise specified, always disconnect the magneto connector and ensure spark plugs are installed on the engine before carrying out electrical system checks. Should the engine be made to rotate with magneto connected, a spark may occur resulting in electrical shock, a fire, or an explosion.**

## SYSTEM DESCRIPTION

### 12V System Capacity

| 12V SYSTEM CAPACITY | |
|---|---|
| Over 2000 RPM | 30 A |
| 1200 RPM (Idle) | 25 A |

### Magneto

A magneto provides the primary source of electrical energy. It transforms a magnetic field into an alternating current (AC).

The magneto stator is wired with a 3 phase star configuration winding.

AC current is rectified and regulated by a voltage regulator/rectifier circuit within the ECM to provide 55 volts for engine component operation. It is then converted into 14.5 volts by a DC to DC converter for vehicle operation.

# TROUBLESHOOTING

NOTE: It is good practice to check for fault codes using B.U.D.S. as a first troubleshooting step. Refer to *DIAGNOSTIC AND FAULT CODES*.

## TROUBLESHOOTING GUIDELINES

### Low or No System Voltage (Engine May Not Start)

The vehicle cannot start without having a minimum voltage to the 55 V power circuit. If the engine does not start, see *VOLTAGE REGULATOR/RECTIFIER* in this subsection and test the Vdc Output using BUDS2

If voltage is not as specified, check the following items in the recommended order until you find the fault:

- Stator (refer to *MAGNETO AND STARTER* subsection)
- Capacitor (see procedure in this subsection).

NOTE: The 55 Vdc may be unstable or unobtainable if the capacitor is faulty, not connected, or incorrectly connected.

If the above mentioned checks were good, isolate each of the following components by disconnecting them individually, and repeating the voltage test after each one.

- Each injector
- Each ignition coil
- Fuel pump
- Oil injection pump.

NOTE: When the 55 Vdc test good after a component is disconnected, replace that component and repeat the test.

# PROCEDURES

Ensure battery is fully charged (if applicable).

Refer to *WIRING HARNESS AND CONNECTORS* subsection for harness layout and connector locations on vehicle.

Refer to appropriate *WIRING DIAGRAM* for additional information.

The magneto is covered in *MAGNETO AND STARTER* subsection.

**⚠ WARNING**

**Ensure vehicle cannot move when performing charging system tests with the engine running.**

# BATTERY

## Charging Battery

### Initial Charging

Sealed VRLA batteries require an initial charge before being used in the vehicle.

NOTE: Since batteries state of charge need to be checked 3 months after their manufacturing date or their last charge, it is highly recommended to check the batteries of all newly arrived vehicles. Consult the "Identification of reminder sticker" section and battery chart on last page.

If you are using a constant current charger, refer to the standard (STD) charging method printed on the battery.

For YTX20HL batteries (18.9 AH), the initial charge must be 1.8 A for 5 - 10 hours.




*YTX20HL CHARGING METHOD*

If you are using an automatic type taper charger, check to make sure that the charger current (amps) is equal to or greater than the standard charging method listed on the battery.

If the battery gets very hot to the touch, cease charging and allow battery to cool down for 6 to 12 hours. Check voltage using a voltmeter. A fully charged, battery should be 12.8 volts or higher after the battery has been off the charger 1-2 hours. If less, it needs additional charge.

### Routine Charging

***NOTICE*** **Overcharging can harm the battery beyond recovery.**

The single most important thing to maintaining a VRLA battery is to not let it sit discharged: keep it fully charged for peak performance.

Use the following guidelines for charging. Always verify battery state of charge before charging, and 30 minutes after charging.

It is not recommended to overcharge sealed VRLA batteries. Because of their characteristics, too much charging will decrease the volume of electrolyte. The longer the overcharge time, the greater the drop in electrolyte – and starting power.

Refer to the following tables for charging routine.

Note that charging times can vary depending on type of charger. Follow the manufacturer's instructions for details.

| STATE OF CHARGE : 100% | | |
|---|---|---|
| VOLTAGE | ACTION | CHARGE TIME |
| 12.8 – 13.0 | Check in 3 months or when vehicle is sold*** | None required |
| | | |
| *** Identify battery as being checked on "date" or needs to be rechecked at "date" | | |

| STATE OF CHARGE : 75% - 100% | | |
|---|---|---|
| VOLTAGE | ACTION | CHARGE TIME * |
| 12.5 – 12.8 | May need slight charge. If no charge given, check in 3 months or when vehicle is sold*** | 3 – 6 hours |
| * Using a constant current charger at standard amps specified on the battery | | |
| *** Identify battery as being checked on "date" or needs to be rechecked at "date" | | |

| STATE OF CHARGE : 50% - 75% | | |
|---|---|---|
| VOLTAGE | ACTION | CHARGE TIME * |
| 12.0 – 12.5 | Need charge. Check in 3 months or when vehicle is sold*** | 5 – 11 hours |
| * Using a constant current charger at standard amps specified on the battery | | |
| *** Identify battery as being checked on "date" or needs to be rechecked at "date" | | |

| STATE OF CHARGE : 25% - 50% | | |
|---|---|---|
| VOLTAGE | ACTION | CHARGE TIME * |
| 11.5 – 12.0 | Need charge. Check in 3 months or when vehicle is sold*** | At least 13 hours verify state of charge |
| * Using a constant current charger at standard amps specified on the battery | | |
| *** Identify battery as being checked on "date" or needs to be rechecked at "date" | | |

| STATE OF CHARGE : 0% - 25% | | |
|---|---|---|
| VOLTAGE | ACTION | CHARGE TIME * |
| 11.5 or less (see instructions below) | Need charge. Check in 3 months or when vehicle is sold*** | 20 hours |
| * Using a constant current charger at standard amps specified on the battery | | |
| *** Identify battery as being checked on "date" or needs to be rechecked at "date" | | |

### Charging for Voltage of 11.5 V or Less

Batteries with voltage below 11.5 V may require special equipment and procedures to recharge.

In charging an over discharged battery having a terminal voltage of 11.5 V or lower, its internal resistance may be too high to charge at a normal charge voltage.

Therefore, it may be necessary to raise the voltage of the battery initially (20 V as a maximum), and charge for approximately 5 minutes. If the ammeter shows no change in current after 5 minutes, you need a new battery.

Current flowing into the battery at high voltage can become excessive. Monitor amperage and adjust voltage as necessary to keep current at the battery's standard amp rating. Charge for approximately 20 hours.

## Testing Battery

### Battery Load Test

1. Connect a battery load tester such as the NAPA ULTRA PRO BATTERY LOAD TESTER (P/N 95260).
2. Ensure proper test conditions.

| TEST CONDITIONS | |
|---|---|
| Initial battery voltage‡ | Above 12.5 Vdc |
| Engine | OFF |
| Load | 3 times the amp-hour (AH) rating |
| Time | 15 seconds |
| ‡ Required for accurate testing | |

| SPECIFICATION | |
|---|---|
| Battery | Above 9.6 Vdc |

If battery voltage drops below specification during test, replace battery and test charging system.

## Removing Battery

**⚠ WARNING**

**Battery BLACK ( – ) cable must always be disconnected first and connected last. Never charge or boost battery while installed on vehicle.**

1. Remove passenger seat and backrest (if applicable).
2. Open storage compartment, remove battery cover and all mounting screws.

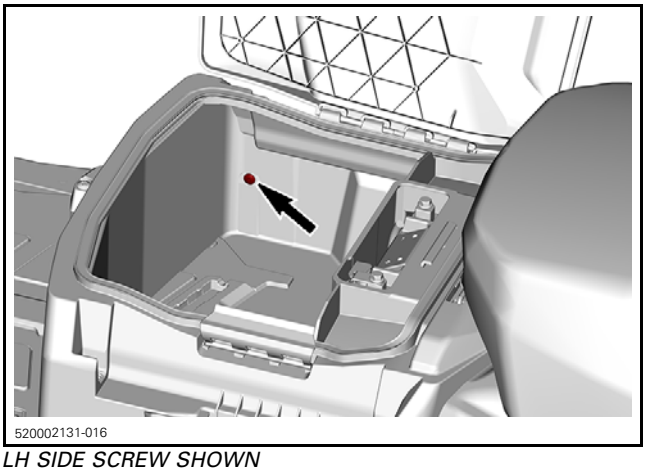


*LH SIDE SCREW SHOWN*

3. Remove storage compartment.

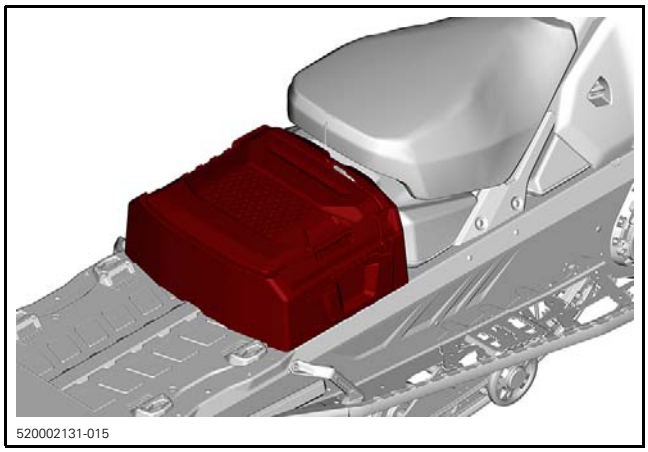
520002131-015

4. Disconnect negative before positive terminal.

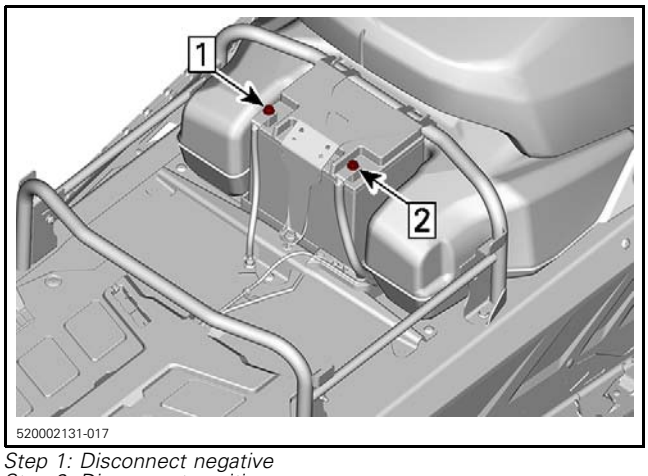

520002131-017

*Step 1: Disconnect negative*
*Step 2: Disconnect positive*

5. Remove battery hold down bracket.

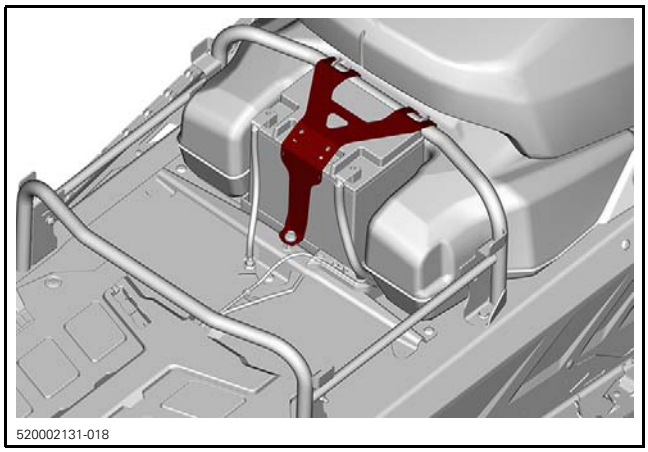
520002131-018

6. Remove battery.

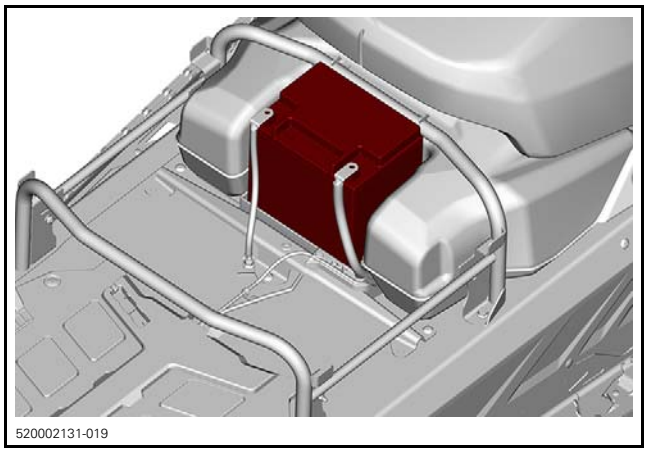
520002131-019

## Installing Battery

The installation is the reverse of the removal procedure. However, pay attention to the following.

| TIGHTENING TORQUE | |
|---|---|
| Battery terminals (positive and negative) | 10 N•m ± 2 N•m (89 lbf•**in** ± 18 lbf•**in**) |
| Battery hold down bracket | 7 N•m ± 1 N•m (62 lbf•**in** ± 9 lbf•**in**) |
| Battery cover retaining screws | 7 N•m ± 1 N•m (62 lbf•**in** ± 9 lbf•**in**) |

Reinstall the seat, backrest and storage compartment if applicable.

# VOLTAGE REGULATOR/ RECTIFIER

## Description

The voltage regulator/rectifier is integrated within the ECM. It receives alternating current (AC) from the magneto which it rectifies and regulates to 55 Vdc.

On a single pull start with the engine between 250 and 500 RPM, the magneto, is capable of producing 30-40 Vdc.

### 55 Vdc Output

| ECMB CONNECTOR |
|---|
| pins M1, M2, M4 |

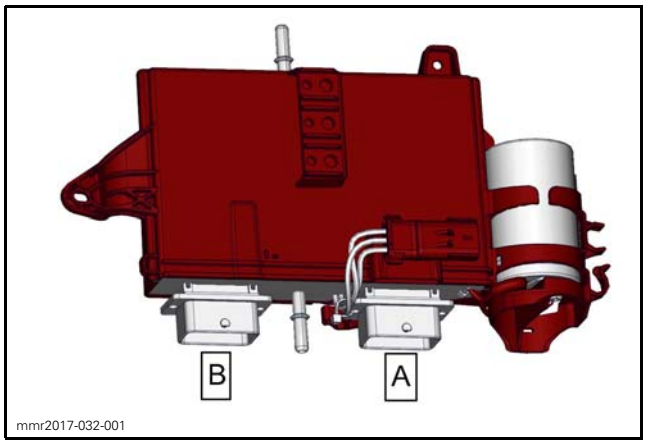


## Testing Continuity (Voltage Regulator/Rectifier)

Due to internal circuitry, there is no static test available to check continuity.

## Testing 55 Vdc Voltage Output with B.U.D.S. (Voltage Regulator/Rectifier)

1. Raise vehicle so that the track is off the ground and can turn freely.

**⚠ WARNING**

**Ensure vehicle track is completely raised off ground. If the track should come into contact with the ground when the engine is at 5000 RPM, equipment damage and severe injury may result.**

2. Remove RH side panel, refer to *BODY* subsection.

### Procedure When Engine Cannot be Started

1. Install the following tools to supply power to the 12 Vdc circuits for this test. Refer to *COMMUNICATION TOOLS* subsection for proper connections.
   - POWER INTERFACE (P/N 515 177 223)
   - 12 V BATTERY SUPPLY CABLE (P/N 529 035 997)
   - 12 volts battery.
2. Select the **Measurements** page.
3. Read the voltage on the **55V System Circuit** meter in B.U.D.S. as the engine is turning over.

| 55 VDC VOLTAGE OUTPUT TEST | |
|---|---|
| TEST ENGINE SPEED | VOLTAGE |
| Pull start (engine not running) | At least 30 Vdc |

If you cannot obtain the specified voltage, refer to *TROUBLESHOOTING* in this subsection and carry out the required tests.

Also carry *TESTING VOLTAGE REGULATOR/RECTIFIER GROUND CIRCUIT* in this subsection.

### Procedure with Engine Running

1. Connect vehicle to BRP diagnostic software (BUDS2). Refer to *COMMUNICATION TOOLS* subsection.
2. Start engine.
3. Select the **Measurements** page.
4. Read the voltage on the **55 V System Circuit** meter in B.U.D.S.

| 55 VDC VOLTAGE OUTPUT TEST (ENGINE RUNNING) | |
|---|---|
| TEST ENGINE SPEED | VOLTAGE |
| Any RPM from idle and above | 55 Vdc ± 2 |

If voltage is below or above specification, refer to *TROUBLESHOOTING* in this subsection and carry out the required tests.

Also test the ECM ground circuit.

## Testing ECM Ground Circuit

1. Disconnect the ECMA connector.
2. Test ground circuit continuity as follows.

| ECM GROUND CIRCUIT | | |
|---|---|---|
| Black wire of capacitor | ECMA Connector Pins L3, L4, M3, M4 | Continuity |
| Black wire of capacitor | Chassis ground | Continuity |

# DC-DC CONVERTER

System voltage (12 Vdc) is explained in *POWER DISTRIBUTION AND GROUNDS* subsection.

## 12 Vdc Output Voltage Tests (DC-DC Converter)

| 12 VDC OUTPUT VOLTAGE | |
|---|---|
| OUTPUT | CONNECTOR - -PIN |
| Primary 12 Vdc | COM - 6 |
| Secondary 12 Vdc | COM - 5 |

### Testing Primary 12 Vdc Circuit with B.U.D.S.

1. Start engine.
2. Turn off any accessories.
3. Disconnect any external batteries.
4. Select the **Measurements** page.
5. Read the voltage on the **Primary 12 V Circuit** meter in B.U.D.S.

| PRIMARY 12 VDC CIRCUIT TEST WITH B.U.D.S. | |
|---|---|
| TEST ENGINE SPEED | VOLTAGE |
| Any RPM from idle and above | 14.5 ± 0.5 Vdc |

If voltage is above specification, replace ECM.

If voltage is below specification, check the *PRIMARY 12 VDC CIRCUIT*

Also test the ECM ground circuit (voltage regulator/rectifier).

Install all removed parts and connectors.

### Secondary 12 Vdc Circuit Test

The secondary 12 Vdc system is not monitored in B.U.D.S.

To test it, carry out the following procedure.

1. Remove RH side panel to expose the fuse(s). Refer to *BODY*.
2. Set FLUKE 115 MULTIMETER (P/N 529 035 868) to Vdc scale.
3. Start the engine.
4. Unplug battery (if applicable)
5. Probe the COM connector as follows.

| 12 VDC OUTPUT VOLTAGE | |
|---|---|
| OUTPUT | CONNECTOR - -PIN |
| Secondary 12 Vdc | COM - 5 |

| SECONDARY 12 VDC CIRCUIT TEST | |
|---|---|
| TEST ENGINE SPEED | VOLTAGE |
| Any RPM from idle and above | 14.5 ± 0.5 Vdc |

If voltage cannot be measured, test continuity of wire from COM-5 to ECMB pins L1, L2, and L3.

If the wire continuity is good and other voltages from ECM tested good, ECM may not output secondary 12 Vdc.

Test the *VOLTAGE REGULATOR/RECTIFIER GROUND CIRCUIT*. If the ground circuit tests good, the ECM will need to be replaced.

NOTE: Before replacing ECM, all ECM grounds, power output circuits, and input circuits from the magneto must be tested.

Repair or replace as applicable.

# CAPACITOR

The fuel injectors, which require a stable 55 Vdc for their operation, are particularly sensitive to voltage variations. A capacitor is connected to the 55 Vdc electrical system to stabilize the system voltage.

The capacitor is located next to the ECM on the RH side of the vehicle.

## Quick Troubleshooting

A faulty capacitor will lead to the following symptoms:

– Unstable, low, or no system voltage (55 V).
– Engine will not start
– Engine hard to start
– Poor idling
– Engine misfiring.

NOTE: A defective capacitor is likely to give off a burning like odor.

## Discharging Capacitor

**⚠ WARNING**

**The capacitor remains charged approximately 10 seconds after engine is stopped. A high energy could suddenly be discharged if capacitor terminals were shorted. Always discharge capacitor before servicing.**

To properly discharge capacitor, leave it connected for at least 5 minutes after engine has been stopped, or after engine was last cranked before carrying out any maintenance procedure on the capacitor or 55 volt electrical system.

## Testing Capacitor Charge Hold

### Procedure Setup

1. Remove capacitor from vehicle. Refer to *REMOVING CAPACITOR* in this subsection
2. Work on a non metallic workbench.
3. Connect the following items to the capacitor. See following illustration.
   - A switch
   - Resistor (300 Ω/5 W)
   - 12 V battery (fully charged).

**NOTICE** Ensure the test switch is in the OFF position when connecting the battery to the capacitor to prevent sparking or electrical shock.

**⚠ WARNING**

Connect the battery POSITIVE post to the capacitor POSITIVE terminal.

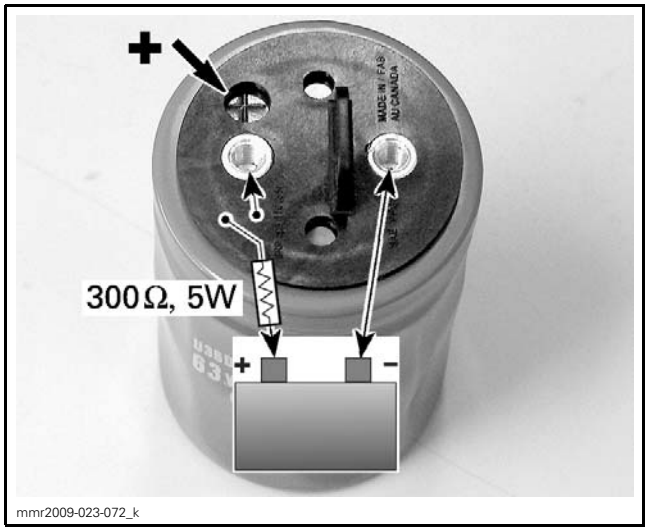


*SWITCH AT OFF*

### Test Procedure

1. Turn switch to ON and read capacitor voltage. Wait until voltage reaches 12 V.

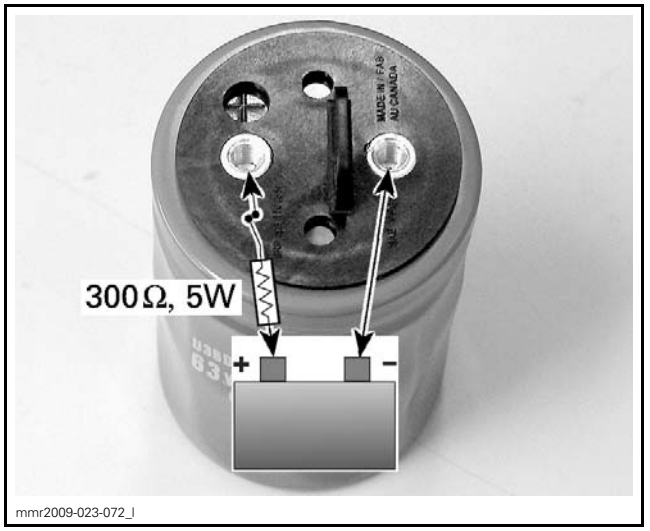


*SWITCH AT ON*

2. Turn test switch to OFF.
3. Use the FLUKE 115 MULTIMETER (P/N 529 035 868) set to Vdc.
4. Read capacitor voltage.

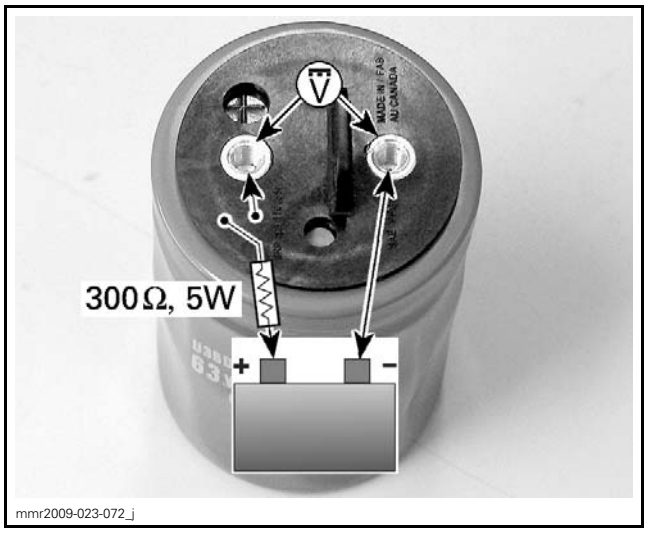


*SWITCH AT OFF*

5. Wait 5 minutes.
6. Read capacitor voltage again.

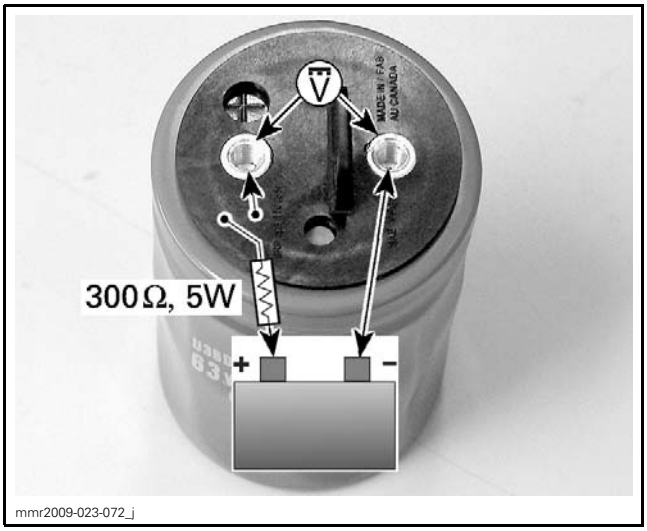


*SWITCH AT OFF*

7. The difference between the readings should not exceed the specification.

| ALLOWED VOLTAGE DIFFERENCE BETWEEN READINGS |
|---|
| 0.5 Vdc |

If readings are out of specification, replace capacitor.

Reinstall capacitor. Refer to *INSTALLING CAPACITOR* in this subsection.

## Testing Capacitor Residual Voltage

### Procedure Setup

Follow the same steps as described in Procedure Setup of *TESTING CAPACITOR CHARGE HOLD*.

### Test Procedure

1. Turn switch to ON and read capacitor voltage. Wait until voltage reaches 12 V to ensure the capacitor is fully charged.

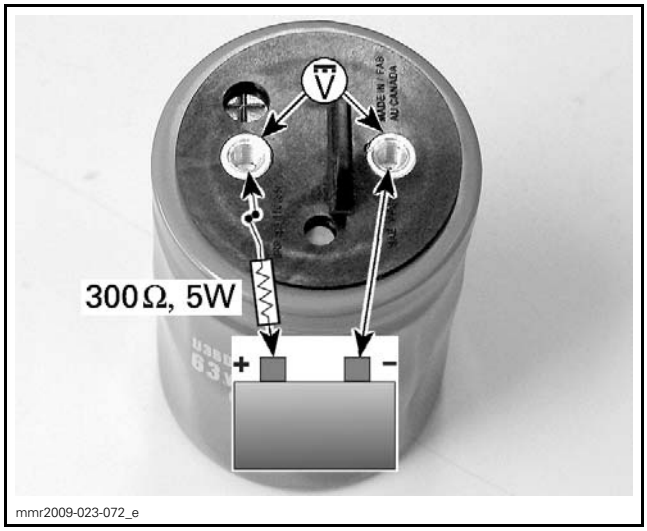


2. Turn test switch to OFF.

NOTE: Carry out the following steps **within one minute** to ensure the capacitor does not begin to discharge before the test.

3. Remove battery from circuit and connect the resistor and switch across capacitor terminals.

**NOTICE Ensure test switch is in the OFF position during the circuit configuration change.**

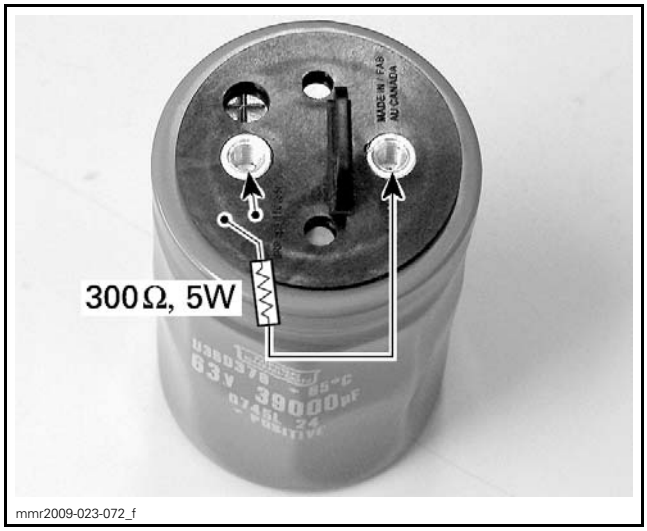


*SWITCH AT OFF*

4. Turn test switch to the ON position for 12 seconds ± 1 second to slowly discharge capacitor.
5. Read capacitor voltage.

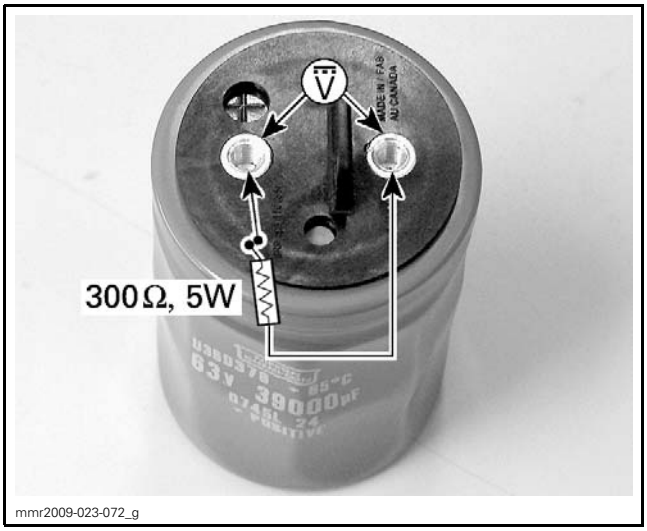


*SWITCH AT ON*

| CAPACITOR RESIDUAL VOLTAGE |
|---|
| Must be above 2.6 Vdc |

If voltage is out of specification, replace capacitor.

## Removing Capacitor

1. Remove upper body module. Refer to *BODY* subsection.
2. Disconnect magneto connector.
3. Remove muffler.

**⚠ WARNING**

**Disconnect the magneto connector. Should the engine be made to rotate with magneto connected, a spark may occur resulting in electrical shock, a fire or an explosion.**

4. Ensure capacitor remains connected for at least 1 minute after engine shut down, or after engine was last cranked. This ensures capacitor is fully discharged.
5. Disconnect wire terminals from capacitor.

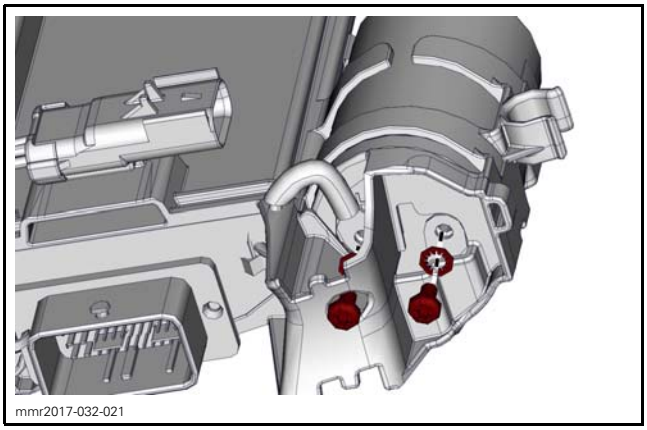


6. Remove capacitor from bracket.

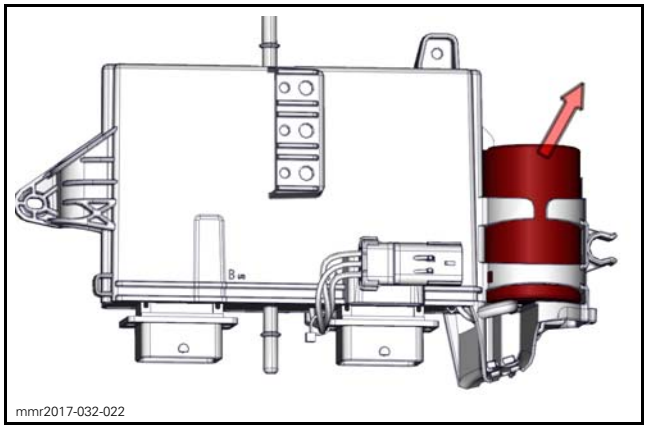


**⚠ WARNING**

**Do not remove plastic protector from top of capacitor unless the capacitor is to be replaced. The cover prevents the two capacitor contacts from being easily shorted together which may cause a spark, possibly resulting in a fire.**

7. Check inspection hole on top of capacitor.

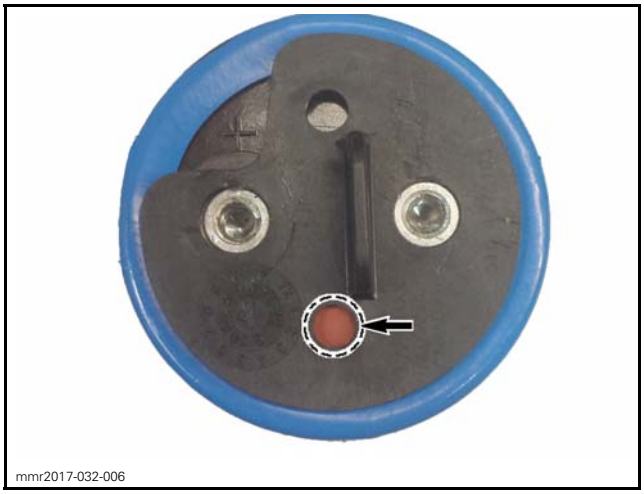


*INSPECTION HOLE (SHIELD IS INTACT)*

If the top shield is open (pierced), replace capacitor.

NOTE: The following illustration shows a perforated shield with capacitor fluid leakage. This capacitor was connected in reverse polarity.

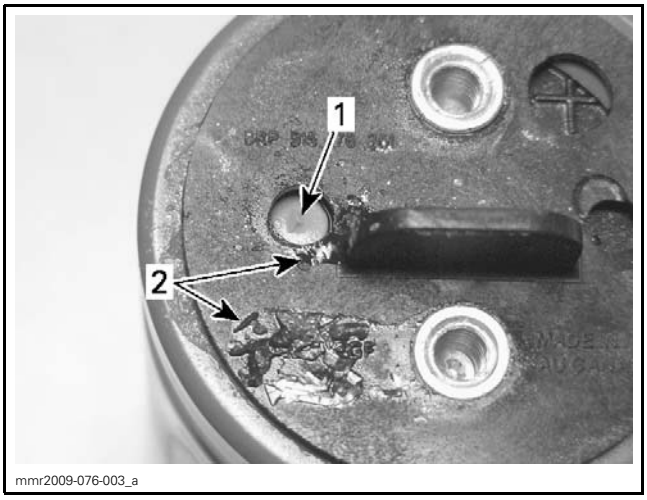

mmr2009-076-003_a

*1. Perforated shield*
*2. Capacitor fluid leakage*

## Installing Capacitor

1. If capacitor was replaced, install a plastic protector cap on new capacitor.

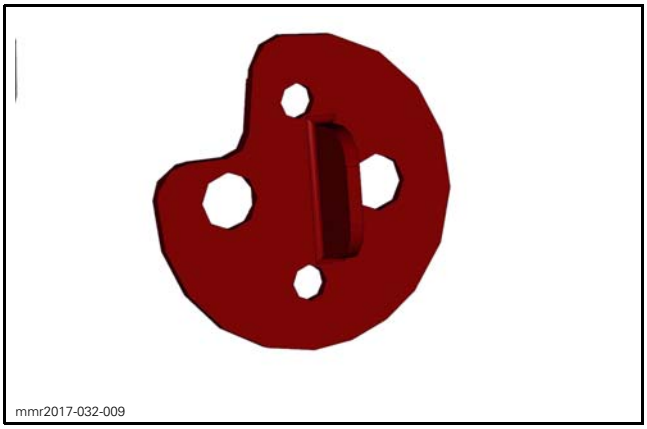
mmr2017-032-009

NOTE: When reinstalling plastic protector, ensure the **+** sign on top of capacitor is visible through the hole in protector.

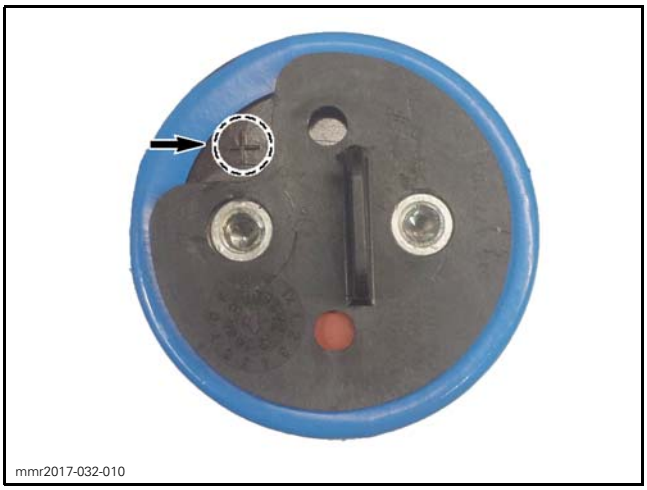
mmr2017-032-010

Otherwise, pull off protector, rotate it one half turn, then reinstall it.

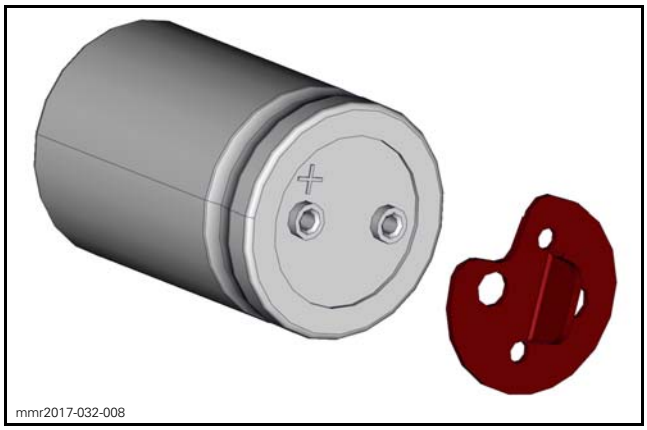
mmr2017-032-008

2. Route capacitor wires as per illustration and connect wire terminals to capacitor. Connect the WH/RD wire to the **+** terminal.

**NOTICE** **Improper polarity could destroy the capacitor while in operation.**

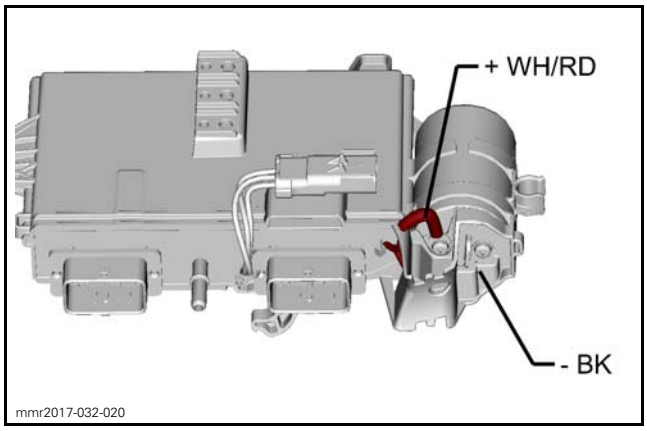

mmr2017-032-020

**NOTICE** **Be careful not to damage threads when tightening capacitor screws.**

3. Tighten screws to specification.

| TIGHTENING TORQUE | |
|---|---|
| Capacitor screws | 2 N•m (18 lbf•**in**) |

4. Complete assembly of remaining parts in the reverse order of removal.

# CHARGING SYSTEM (ACE)

## GENERAL

### SYSTEM DESCRIPTION

The purpose of the charging system is to keep the battery at a full state of charge.

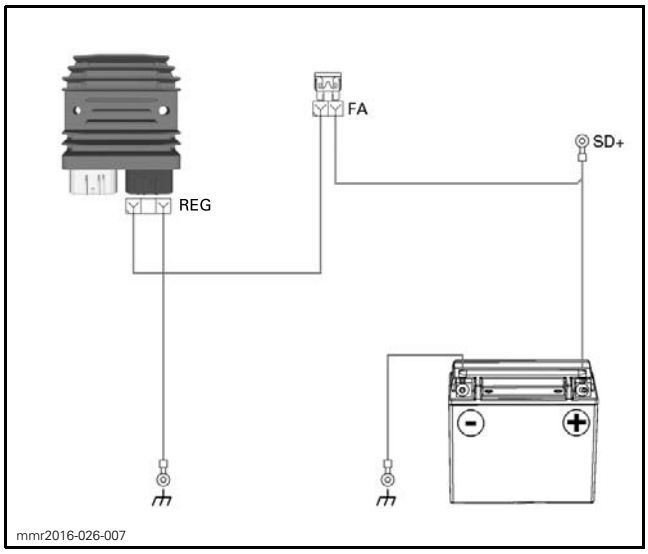


### Magneto

The magneto is the primary source of electrical energy. It transforms a magnetic field into electric current (AC).

The alternating current is regulated and transformed into direct current (DC) by the voltage regulator, and normally powers all of the vehicle's systems and accessories.

The magneto has a 3 phase delta wound stator.

To test magneto, refer to *MAGNETO AND STARTER* subsection.

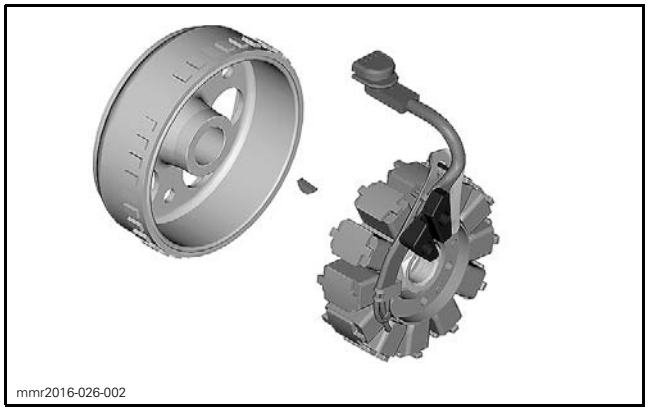


### Voltage Regulator

The regulator receives AC current from the magneto and transforms it into direct current (DC).

The voltage regulator limits voltage to prevent any damage to electrical components.

| CONDITION | VOLTAGE Vdc |
|---|---|
| Idle | Minimum 12.5 |
| Fast idle | Target 14.5 |
| All | Maximum 15 |

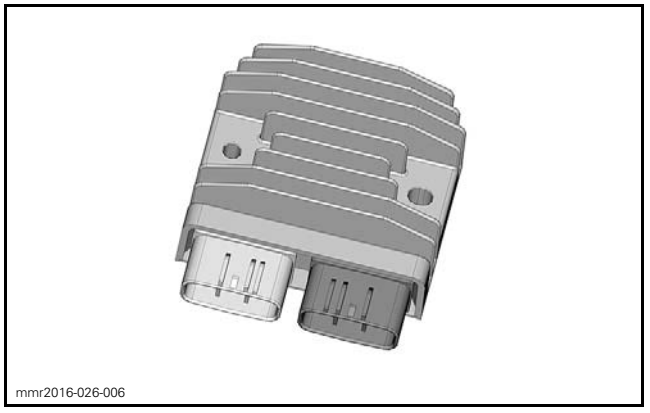


### Battery

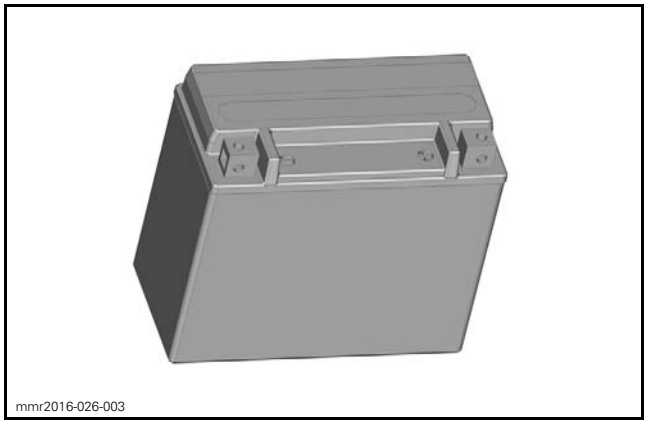


The battery supplies DC power to every electrical and electronic system in the vehicle as well as all accessories. At low engine RPM operation and high current load conditions, it supplements the magneto's output as required, and helps to maintain a steady system voltage.

# TROUBLESHOOTING

It is good practice to check for fault codes using the BUDS2 software as a first troubleshooting step. Refer to *DIAGNOSTIC SYSTEM AND FAULT CODES* subsection.

## BATTERY REGULARLY DISCHARGED OR WEAK

1. Loose or corroded battery cable connections.
   - *Tighten or repair battery cable connections.*
2. Worn or defective battery.
   - *Charge and test battery.*
3. Defective magneto stator.
   - *Test stator, refer to MAGNETO AND STARTER SYSTEM subsection.*
4. Defective regulator/rectifier.
   - *Test system voltage.*
5. Damaged magneto rotor or Woodruff key.
   - *Replace magneto rotor or Woodruff key, refer to MAGNETO AND STARTER SYSTEM subsection.*

# PROCEDURES

Ensure battery is fully charged.

Refer to *WIRING HARNESS AND CONNECTORS* subsection for harness layout and connector locations on vehicle.

Refer to appropriate *WIRING DIAGRAM* for additional information.

The magneto is covered in *MAGNETO AND STARTER* subsection.

**⚠ WARNING**

**Ensure vehicle cannot move when performing charging system tests with the engine running.**

## BATTERY LOAD TEST

1. Connect a battery load tester.
2. Ensure proper test conditions.

| TEST CONDITIONS | |
|---|---|
| Initial battery voltage‡ | Above 12.5 Vdc |
| Engine | OFF |
| Load | 3 times the amp-hour (AH) rating |
| Time | 15 seconds |
| ‡ Required for accurate testing | |

| SPECIFICATION | |
|---|---|
| Battery | Above 9.6 Vdc |

If battery voltage drops below specification during test, replace battery and perform a *CHARGING SYSTEM LOAD TEST*.

## CHARGING SYSTEM LOAD TEST

NOTE: Ammeter location is important. Only clamp over positive wire near regulator.

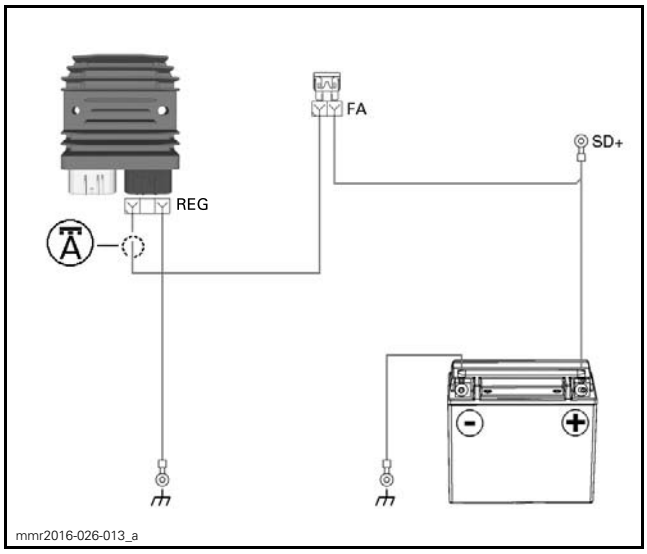


1. Connect a battery load tester.
2. Start vehicle and read voltage on tester.

| SPECIFICATION | |
|---|---|
| Voltage | 12.5 - 15 Vdc |

If voltage is **above** specification, replace regulator and continue with next steps.

3. Connect an AC/DC clamp ammeter around REG-1 wire.
4. Ensure proper test conditions.

| TEST CONDITIONS | |
|---|---|
| Battery voltage at idle‡ | Above 12.6 Vdc |
| Engine | Increase to 4000 RPM |
| Load | As required to decrease battery voltage to 12 Vdc |
| ‡ Required for accurate testing | |

5. Read amperage on ammeter.

| MAGNETO | SPECIFICATION |
|---|---|
| 500 W | 41 ± 5 Amps |

NOTE: With a fully charged battery and no electrical loads, specification is less than 7A.

If amperage or voltage is not within specification, verify magneto and wires. Refer to *MAGNETO AND STARTER* subsection. Replace:

– Voltage regulator if magneto test is within specifications.
– Magneto if magneto test is not within specifications.

# VOLTAGE REGULATOR (REG)

## Voltage Regulator Location

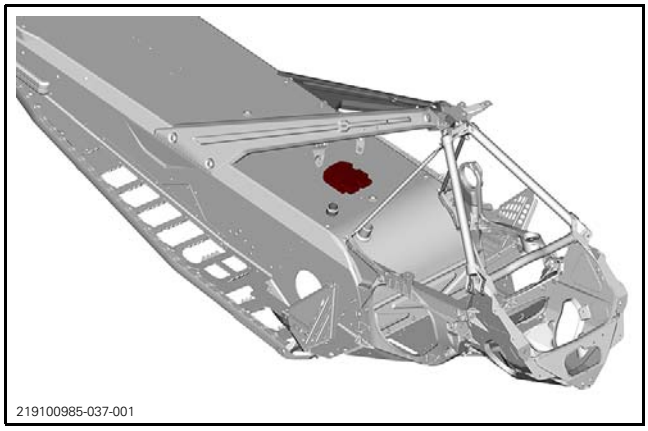


## Testing the Voltage Regulator Continuity

Due to internal circuitry, there is no static test available.

## Testing the Voltage Regulator Power

1. Check voltage at REG-1.

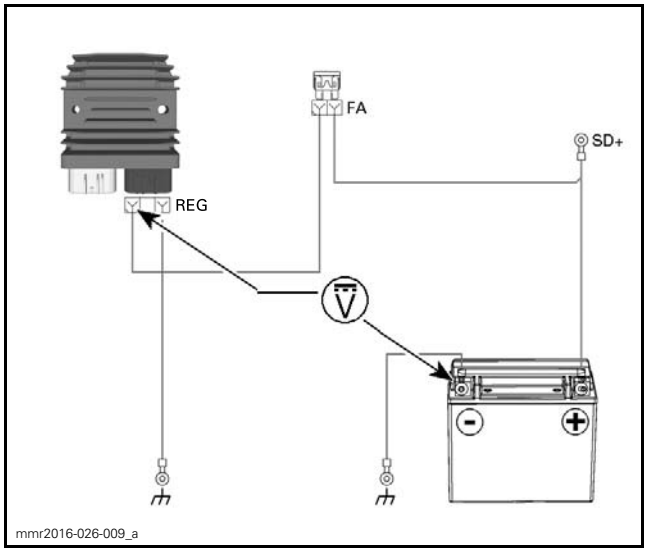


| TEST CONDITIONS | |
|---|---|
| REG-1 | Hot at all times |

| BACKPROBE | PROBE | SPECIFICATION |
|---|---|---|
| REG-1 | BAT (-) | Battery voltage |

2. Connect a battery load tester.
3. Start vehicle.
4. Ensure proper test conditions.

| TEST CONDITIONS | |
|---|---|
| Battery voltage at idle‡ | Above 12.6 Vdc |
| Engine | Increase to 4000 RPM |
| Load | As required to decrease battery voltage to 12 Vdc |
| ‡ Required for accurate testing | |

5. Measure voltage drop.

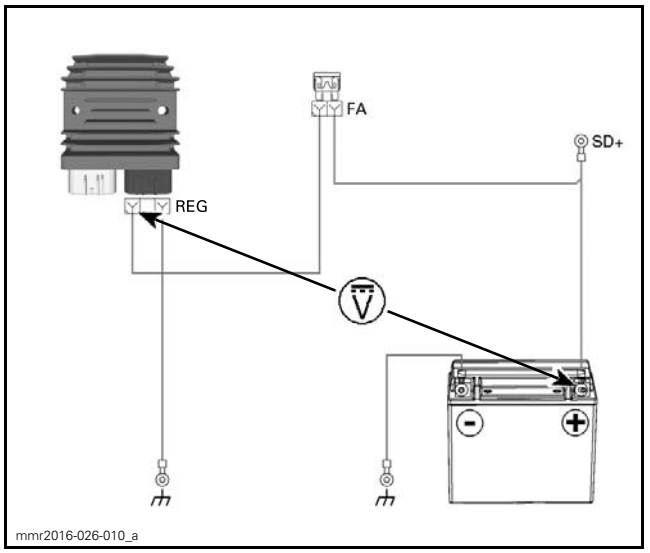

| BACKPROBE | PROBE | SPECIFICATION |
|---|---|---|
| REG-1 | BAT1 (+) | Under 0.2 Vdc |

If voltage drop is above specification, locate and repair damaged connector/wire.

### Testing the Voltage Regulator Ground

1. Check ground at REG-3.

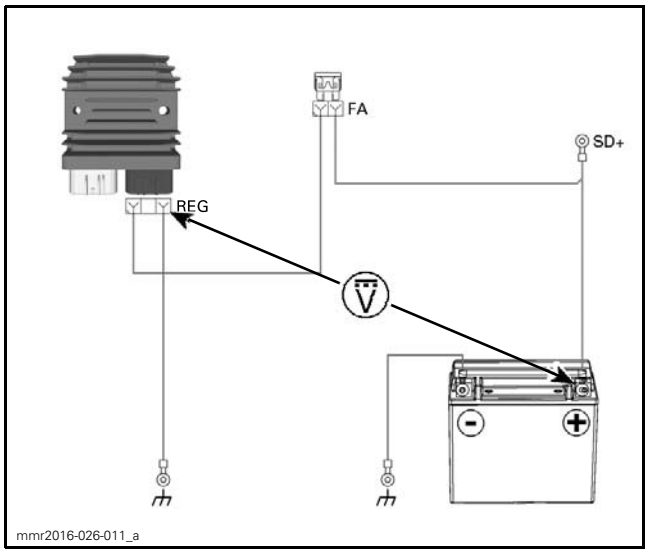


| TEST CONDITIONS | |
|---|---|
| REG-3 | Permanent ground |

| BACKPROBE | PROBE | SPECIFICATION |
|---|---|---|
| REG-3 | BAT (+) | Battery voltage |

2. Connect a battery load tester.
3. Start vehicle.
4. Ensure proper test conditions.

| TEST CONDITIONS | |
|---|---|
| Battery voltage at idle‡ | Above 12.6 Vdc |
| Engine | Increase to 4000 RPM |
| Load | As required to decrease battery voltage to 12 Vdc |
| ‡ Required for accurate testing | |

5. Measure voltage drop.

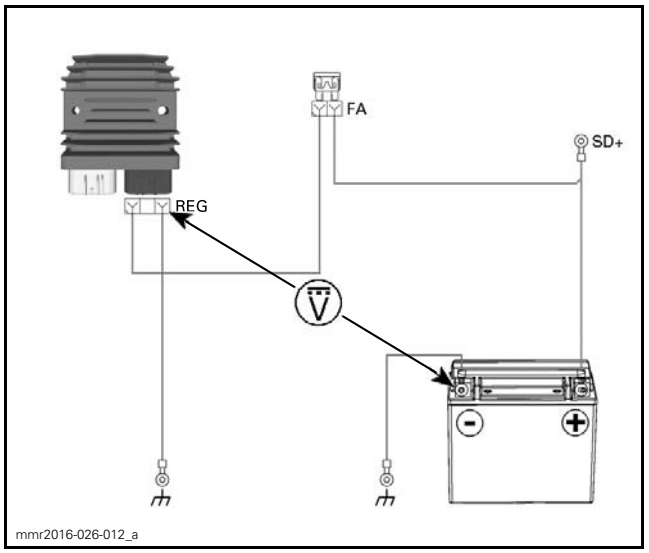


| BACKPROBE | PROBE | SPECIFICATION |
|---|---|---|
| REG-3 | BAT (-) | Under 0.4 Vdc |

If voltage drop is above specification, locate and repair damaged connector/wire.

## BATTERY

### Battery Information

These vehicles are equipped with a VRLA battery (Valve Regulated Lead Acid). It is a maintenance-free type battery.

Refer to *BATTERY ACTIVATION, CHARGING, AND MAINTENANCE* article for procedures.

### Removing Battery

**⚠ WARNING**

**Battery BLACK ( – ) cable must always be disconnected first and connected last. Never charge or boost battery while installed on vehicle.**

1. Remove passenger seat and backrest (if applicable).
2. Open cargo box, remove battery cover and all mounting screws.

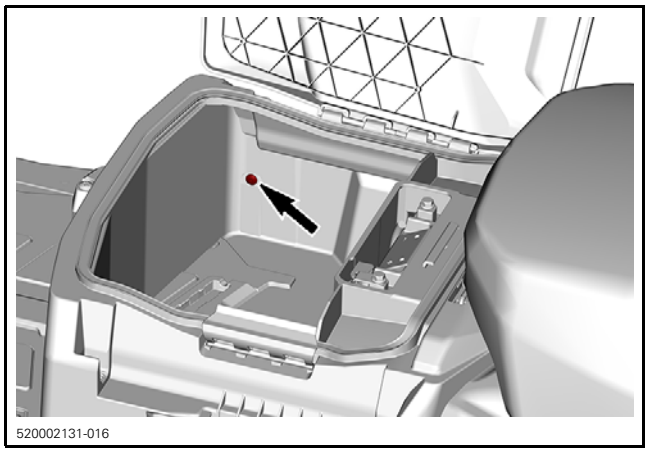


*LH SIDE SCREW SHOWN*

3. Remove cargo box.

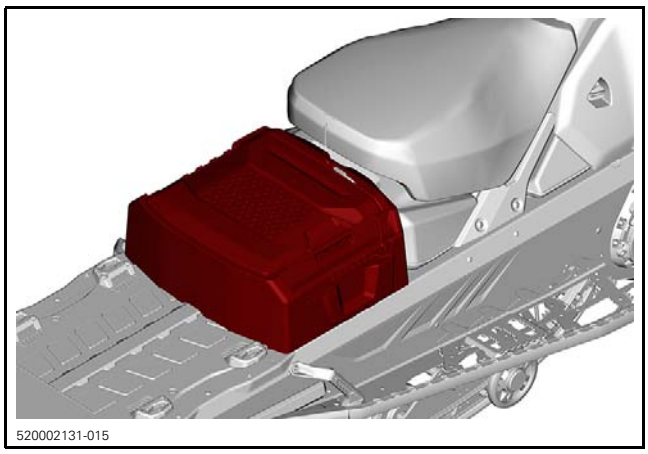


4. Disconnect negative before positive terminal.

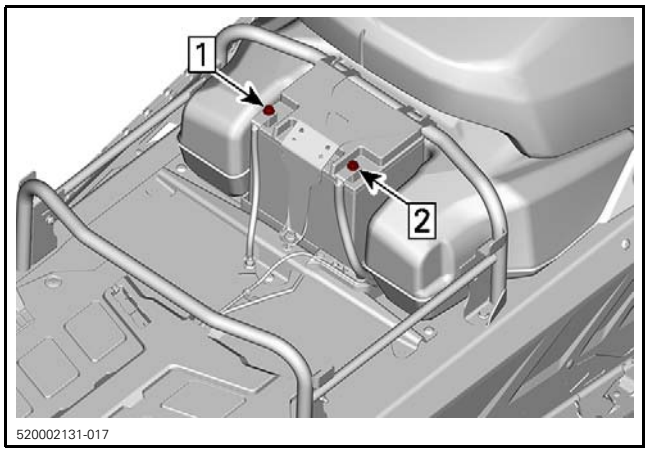


*Step 1: Disconnect negative*
*Step 2: Disconnect positive*

5. Remove battery hold down bracket.

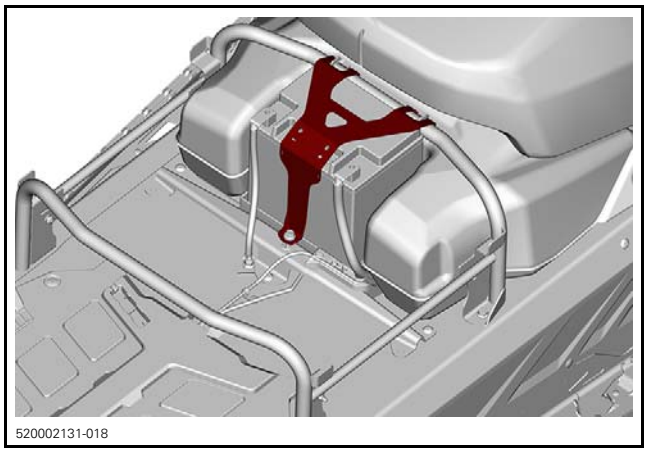


6. Remove battery.

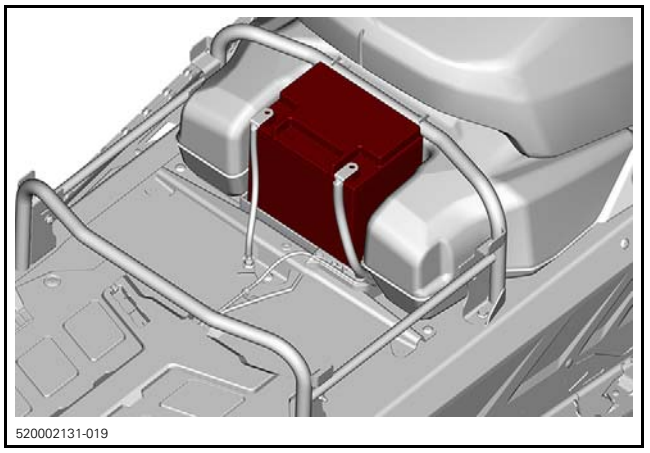


## Installing Battery

The installation is the reverse of the removal procedure. However, pay attention to the following details.

| TIGHTENING TORQUE | |
|---|---|
| Battery terminals (positive and negative) | 10 N•m ± 2 N•m (89 lbf•**in** ± 18 lbf•**in**) |
| Battery hold down bracket | 7 N•m ± 1 N•m (62 lbf•**in** ± 9 lbf•**in**) |
| Battery cover retaining screws | 7 N•m ± 1 N•m (62 lbf•**in** ± 9 lbf•**in**) |

Reinstall the seat, backrest and cargo box if applicable.

# STARTING SYSTEM (EFI AND E-TEC)

## SERVICE TOOLS

| Description | Part Number | Page |
|---|---|---|
| ECM ADAPTER TOOL | 529 036 166 | 289–290 |
| FLUKE 115 MULTIMETER | 529 035 868 | 289 |

## SERVICE PRODUCTS

| Description | Part Number | Page |
|---|---|---|
| DIELECTRIC GREASE | 293 550 004 | 291 |

# GENERAL

## STARTING SYSTEM BASICS (WITHOUT BATTERY)

### Conditions for Engine Starting

– Emergency engine stop switch set to RUN;
– D.E.S.S. key on the D.E.S.S. post.

### Starting System Operation

Refer to *REWIND STARTER* subsection for starting system operation.

## STARTING SYSTEM BASICS (WITH BATTERY)

### Basic Starting System Operation (With Battery)

When the START button is pressed, 12 Vdc is applied to the ECM. The ECM activates the internal ECM relay which provides 12 volts to one end of the coil of the starter solenoid. If the engine cranking conditions are met, the ECM completes the starter solenoid control circuit by providing a ground.

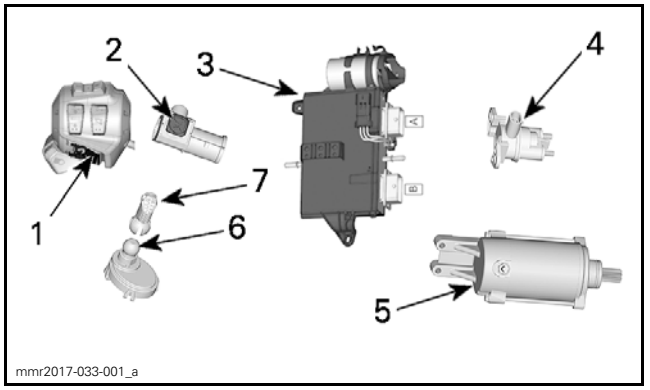


*1. Start/RER button*
*2. Emergency engine stop switch*
*3. ECM*
*4. Starter solenoid*
*5. Starter*
*6. D.E.S.S. post*
*7. D.E.S.S. key*

### Engine Cranking Conditions

The following conditions must be met to allow engine cranking:

1. Emergency engine stop switch set to RUN.
2. D.E.S.S. key on the D.E.S.S. post.
3. START button pressed and held.

### Starting System Logic

If the START button is activated while the throttle lever is depressed more than 60%, the engine will crank but will not start (engine drowned mode).

If the START button is held after engine has started, the ECM automatically stops the starter if engine speed reaches at least 1400 RPM.

# TROUBLESHOOTING (WITH BATTERY)

## DIAGNOSTIC TIPS

NOTE: It is a good practice to check for fault codes using B.U.D.S. as a first troubleshooting step. Refer to *DIAGNOSTIC SYSTEM AND FAULT CODES* subsection.

Starting system failures are not necessarily related to the starter but may be due to one the following:

– Crankshaft position sensor (CPS)
– Starter solenoid fuse and start fuse
– Battery, refer to *CHARGING SYSTEM*
– START/RER button
– Starter solenoid
– Emergency engine cut-off switch
– ECM
– Wiring/connections.

Check these components before removing the starter.

NOTE: This subsection assumes the problem is related to an electrical component of the starting system. If the starting system tests good, ensure engine is in good condition. Refer to applicable subsection.

## DIAGNOSTIC GUIDELINES

### NOTHING HAPPENS WHEN START/RER BUTTON PRESSED

1. Battery not connected
   - *Connect battery.*
2. Burnt fuse
   - *Check fuses*
3. Defective internal ECM relay or related circuits
   - *Test power and ground circuits to starter solenoid.*
4. Defective START/RER switch
   - *Test START/RER switch, wiring and connections.*

### ENGINE DOES NOT CRANK

1. Discharged battery
   - *Recharge and test. Refer to CHARGING SYSTEM subsection.*
2. Battery connections
   - *Check/clean/tighten.*
3. Poor/bad or corroded ground contacts (engine, battery ground cable, starter etc.)
   - *Check/clean/repair, refer to POWER DISTRIBUTION AND GROUNDS subsection.*
4. Starter solenoid
   - *Test solenoid, wiring and connections.*
5. Damaged starter or ground cables
   - *Carry out SOLENOID DYNAMIC TEST.*
6. No ground provided by ECM to starter solenoid
   - *Refer to CONTINUITY TEST OF START/RER SWITCH CONTROL CIRCUIT in this subsection.*
7. Engine cannot be rotated (possibly seized)
   - *Refer to ENGINE subsection.*

### ENGINE CRANKS SLOWLY

1. Loose, corroded or dirty battery cable connections
   - *Check/clean/tighten.*
2. Discharged/weak battery
   - *Recharge and test. Refer to CHARGING SYSTEM subsection.*
3. Low voltage from starter solenoid
   - *Carry out a SOLENOID DYNAMIC TEST.*
4. Damaged starter or ground cables
   - *Carry out SOLENOID DYNAMIC TEST.*

### STARTER TURNS, BUT STARTER DRIVE DOES NOT MESH WITH RING GEAR

1. Worn starter drive gear/starter gear/ring gear
   - *Replace worn parts. Refer to MAGNETO AND STARTER subsection.*
2. Defective drive
   - *Replace starter drive. Refer to MAGNETO AND STARTER subsection.*

### STARTER KEEPS RUNNING

1. Sticking solenoid contacts
   - *Replace solenoid.*
2. Sticking or defective starter drive
   - *Lubricate or replace. Refer to MAGNETO AND STARTER.*

# PROCEDURES (WITH BATTERY)

| REQUIRED TOOLS | |
|---|---|
| FLUKE 115 MULTIMETER (P/N 529 035 868) |  |
| ECM ADAPTER TOOL (P/N 529 036 166) |  |

**⚠ WARNING**

**Ensure vehicle cannot move when performing starting system tests.**

## START/RER SWITCH

Pressing the start/RER switch sends a start signal (battery voltage) to the ECM. If the *ENGINE CRANKING CONDITIONS* are met, the ECM will ground the starter solenoid.

In B.U.D.S., select the **Measurements** page and press the start/RER button to see if the ECM receives the start signal.

### START/RER Switch Continuity Test

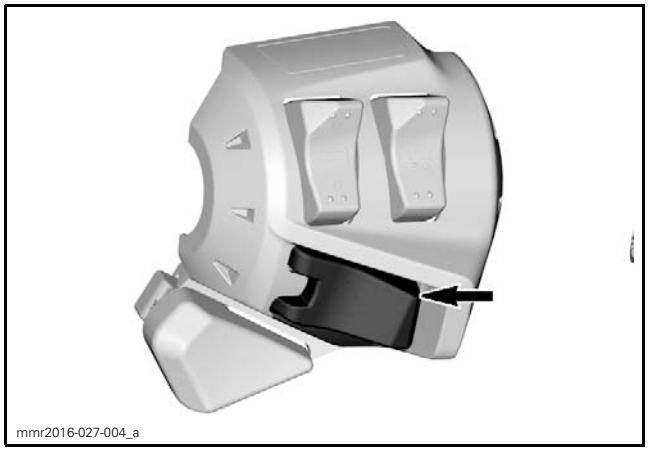


1. Disconnect the steering connector SH2. Refer to *WIRING HARNESS AND CONNECTORS* subsection.
2. Measure resistance through switch as per following table.

| CONTINUITY TEST OF START/RER SWITCH CIRCUIT | | |
|---|---|---|
| SWITCH POSITION | SH | RESISTANCE |
| Released | Pins 1 and 2 | Close to 0 Ω |
| Pressed and held | Pins 2 and 8 | Close to 0 Ω |

If the switch does not test as specified, replace the START/RER switch.

If the switch tests as specified, check for an open circuit in harness.

## STARTER SOLENOID

### Starter Solenoid Location

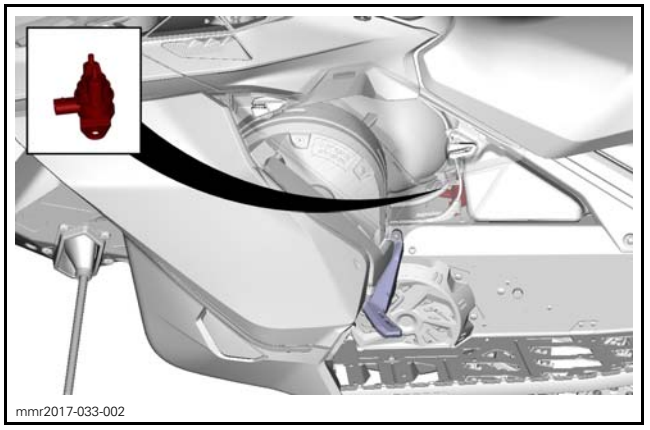


### Testing Solenoid Input Voltage

1. Disconnect solenoid connector.

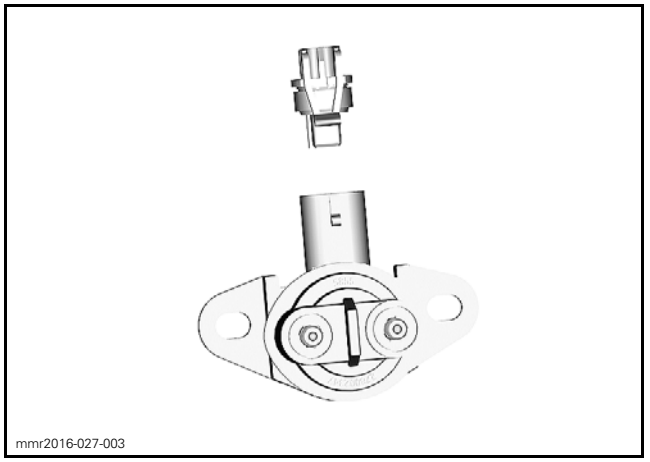


2. Set the multimeter to Vdc.
3. Install D.E.S.S. key on post.
4. Press the START/RER button to activate ECM.
5. Measure voltage.

| SOLENOID INPUT VOLTAGE TEST (SOLENOID COIL) | | |
|---|---|---|
| TEST PROBES | | VOLTAGE READING |
| Pin A | Battery ground | Battery voltage |

If test succeeded, carry out a *SOLENOID CONTROL CIRCUIT TEST*.

If test failed, carry out a *START/RER SWITCH CIRCUIT CONTINUITY TEST*.

## Testing Solenoid Control Circuit

1. Set the multimeter to Ω.
2. Disconnect connector "B" from ECM, refer to *WIRING HARNESS AND CONNECTORS* subsection.
3. Install the ECM ADAPTER TOOL (P/N 529 036 166) on ECM harness connector.
4. Test continuity of wiring from solenoid to ECM as per following table.

| SOLENOID CONTROL CIRCUIT TEST | | |
|---|---|---|
| SOLENOID CONNECTOR | ECM CONNECTOR B | RESISTANCE |
| Pin B | ECMB-A1 | Close to 0 Ω (continuity) |

If test failed, repair or replace wiring/connectors.

If test succeeded, carry out a *SOLENOID COIL RESISTANCE TEST*.

## Testing Solenoid Coil Resistance

1. Set multimeter to Ω.
2. Disconnect solenoid connector.
3. Measure solenoid coil resistance as per following table.

| SOLENOID COIL RESISTANCE TEST | | |
|---|---|---|
| SOLENOID CONNECTOR | | RESISTANCE |
| Pin A | Pin B | 4.5 to 5.5 Ω |

If test fails, replace solenoid.

## Testing Solenoid (Dynamic)

1. Depress the throttle lever to place the ECM in engine drowned mode. Hold throttle lever in place using a rubber band.
2. Set multimeter to Vdc.
3. Crank engine.
4. **As engine is cranking**, measure the voltage as per following tables.

| SOLENOID DYNAMIC TEST (ENGINE CRANKING) | | |
|---|---|---|
| TEST PROBES | | SPECIFICATION |
| Solenoid battery post | Battery ground | Battery voltage |

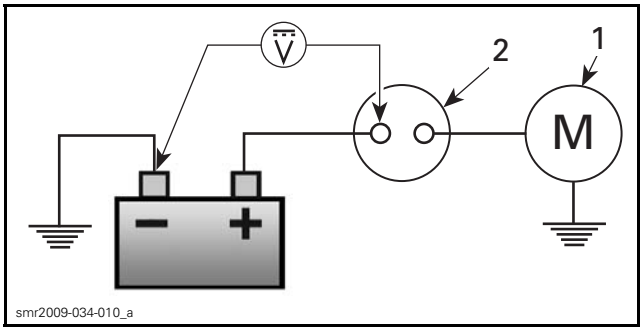


*1. Starter motor*
*2. Starter solenoid*

5. If test failed, check battery positive cable (from battery to solenoid).
6. If test succeeded, continue with next step.

| SOLENOID DYNAMIC TEST (ENGINE CRANKING) | | |
|---|---|---|
| TEST PROBES | | SPECIFICATION |
| Solenoid starter post | Battery ground | Battery voltage |

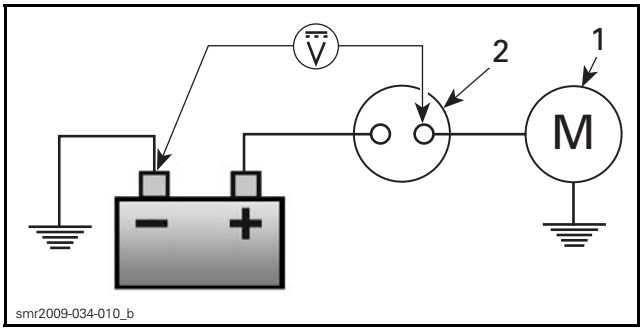


*1. Starter motor*
*2. Starter solenoid*

7. If test failed, test *SOLENOID INPUT VOLTAGE*.
8. If test succeeded, continue with next step.

| SOLENOID DYNAMIC TEST (ENGINE CRANKING) | | |
|---|---|---|
| TEST PROBES | | SPECIFICATION |
| Solenoid battery post | Solenoid starter post | 0.2 Vdc max. |

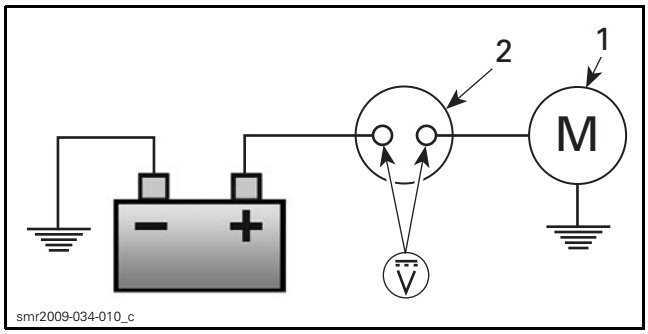


*1. Starter motor*
*2. Starter solenoid*

If test failed, replace solenoid.

If all solenoid dynamic tests are as specified, replace starter.

9. Remove rubber band from throttle lever.

10. Reinstall removed parts.

## Removing Solenoid

1. Disconnect battery. Refer to *CHARGING SYSTEM* subsection.

**⚠ WARNING**

**Always disconnect the BLACK (-) battery cable first and reconnect last.**

2. Disconnect solenoid cables.

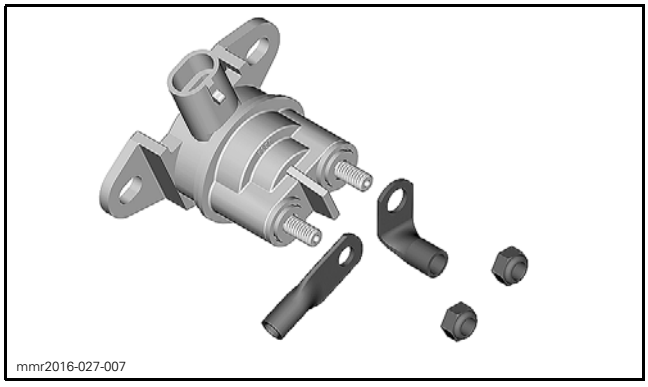


3. Disconnect starter solenoid connector.

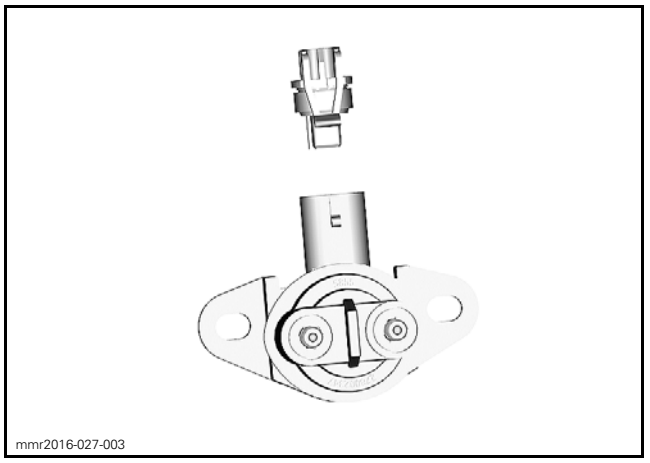


4. Press down on the tabs and release the solenoid.

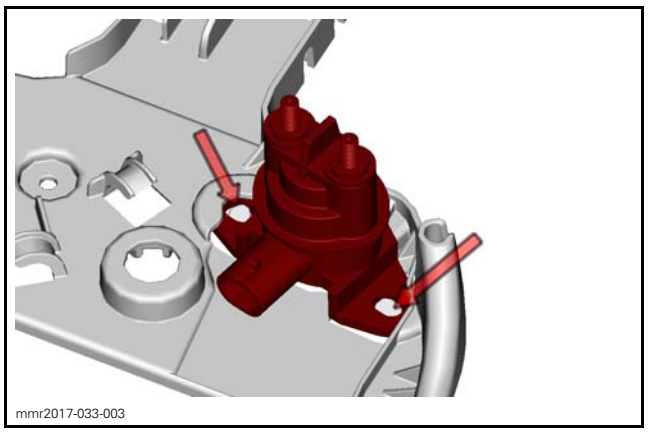


## Installing Solenoid

Reverse the removal procedure and pay attention to the following.

1. Secure solenoid on its support, ensure the tabs lock.

NOTE: Apply DIELECTRIC GREASE (P/N 293 550 004) under and over each connections and make sure each nut are well covered.

| TIGHTENING TORQUE | |
|---|---|
| Solenoid cable retaining nuts | 4 N•m ± 0.5 N•m (35 lbf•**in** ± 4 lbf•**in**) |

2. Close or slide protective caps.

3. Reconnect battery and test starter solenoid operation.

# STARTER

For starter information refer to *MAGNETO AND STARTER* subsection.

# STARTING SYSTEM (ACE)

## SERVICE TOOLS

| Description | Part Number | Page |
|---|---|---|
| ECM ADAPTER TOOL | 529 036 166 | 294 |
| FLUKE 115 MULTIMETER | 529 035 868 | 294 |

## SERVICE PRODUCTS

| Description | Part Number | Page |
|---|---|---|
| DIELECTRIC GREASE (F) | 619 600 021 | 297 |
| DIELECTRIC GREASE | 293 550 004 | 297 |

# GENERAL

## BASIC STARTING SYSTEM OPERATION

When the START button is pressed, 12 Vdc is applied to the ECM. The ECM activates the main relay which provides 12 volts to one end of the coil of the starter solenoid. If the engine cranking conditions are met, the ECM completes the starter solenoid control circuit by providing a ground.

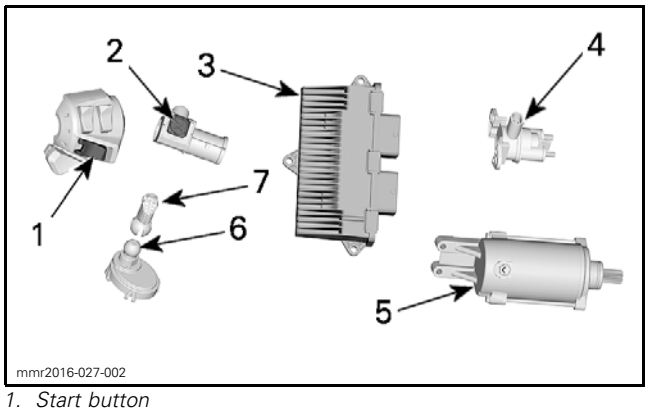


*1. Start button*
*2. Emergency engine stop switch*
*3. ECM*
*4. Starter solenoid*
*5. Starter*
*6. D.E.S.S. post*
*7. D.E.S.S. key*

### Engine Cranking Conditions

The following conditions must be met to allow engine cranking:

1. Emergency engine stop switch set to RUN.
2. D.E.S.S. key on the D.E.S.S. post.
3. START button pressed and held.

### Starting System Logic

If the START button is activated while the throttle lever is depressed more than 60%, the engine will crank but will not start (engine drowned mode).

If the START button is held after engine has started, the ECM automatically stops the starter if engine speed reaches at least 1400 RPM.

# TROUBLESHOOTING

## DIAGNOSTIC TIPS

NOTE: It is a good practice to check for fault codes using BUDS2 as a first troubleshooting step. Refer to *DIAGNOSTIC SYSTEM AND FAULT CODES* subsection.

Starting system failures are not necessarily related to the starter but may be due to one the following:

- Starter solenoid fuse and start fuse. Refer to *WIRING DIAGRAM*.
- Battery, refer to *CHARGING SYSTEM*
- START/RER button
- Starter solenoid
- Emergency engine stop switch
- ECM
- Wiring/connections.

Check these components before removing the starter.

NOTE: This subsection assumes the problem is related to an electrical component of the starting system. If the starting system tests good, ensure engine is in good condition. Refer to applicable subsection.

# DIAGNOSTIC GUIDELINES

## NOTHING HAPPENS WHEN START/RER BUTTON IS PRESSED

1. Battery not connected
   - *Connect battery.*
2. Burnt fuse
   - *Check fuses*
3. Defective relay or related circuits
   - *Test relay and circuits.*
4. Defective START/RER switch
   - *Test START/RER switch, wiring and connections.*

## ENGINE DOES NOT CRANK

1. Discharged battery
   - *Recharge and test. Refer to CHARGING SYSTEM subsection.*
2. Battery connections
   - *Check/clean/tighten.*
3. Poor/bad or corroded ground contacts (engine, battery ground cable, starter etc.)
   - *Check/clean/repair, refer to POWER DISTRIBUTION AND GROUNDS subsection.*
4. Starter solenoid
   - *Test solenoid, wiring and connections.*
5. Damaged starter or ground cables
   - *Carry out SOLENOID DYNAMIC TEST.*
6. No ground provided by ECM to starter solenoid
   - *Refer to TESTING THE START/RER SWITCH CONTROL CIRCUIT CONTINUITY in this subsection.*
7. Engine cannot be rotated (possibly seized)
   - *Refer to ENGINE subsection.*

## ENGINE CRANKS SLOWLY

1. Loose, corroded or dirty battery cable connections
   - *Check/clean/tighten.*
2. Discharged/weak battery
   - *Recharge and test. Refer to CHARGING SYSTEM subsection.*
3. Low voltage from starter solenoid
   - *Carry out a SOLENOID DYNAMIC TEST.*
4. Damaged starter or ground cables
   - *Carry out SOLENOID DYNAMIC TEST.*

## STARTER TURNS, BUT STARTER DRIVE DOES NOT MESH WITH RING GEAR

1. Worn starter drive gear/starter gear/ring gear
   - *Replace worn parts. Refer to MAGNETO AND STARTER subsection.*
2. Defective drive
   - *Replace starter drive. Refer to MAGNETO AND STARTER subsection.*

## STARTER KEEPS RUNNING

1. Sticking solenoid contacts
   - *Replace solenoid.*
2. Sticking or defective starter drive
   - *Lubricate or replace. Refer to MAGNETO AND STARTER.*

# PROCEDURES

| REQUIRED TOOLS | |
|---|---|
| ECM ADAPTER TOOL (P/N 529 036 166) |  |
| FLUKE 115 MULTIMETER (P/N 529 035 868) |  |

**⚠ WARNING**

Ensure vehicle cannot move when performing starting system tests.

# START/RER SWITCH

## Testing the START/RER Switch Circuit Continuity

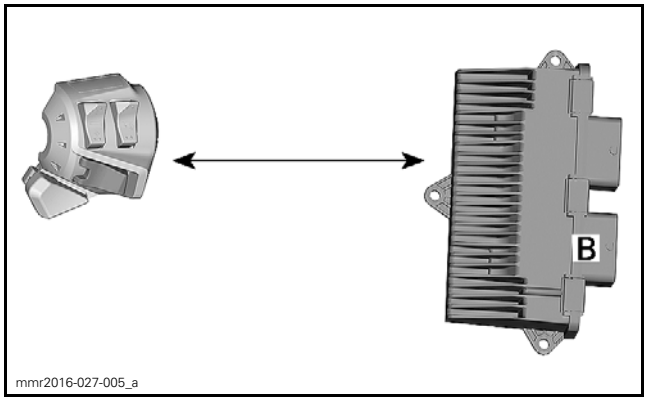


In BUDS2, verify the **Monitor** page and **ECM** tab to see if the button is working.

1. Remove start button fuse.

Disconnect connector "B" from the ECM, refer to *WIRING HARNESS AND CONNECTOR* subsection.

Install the ECM adapter on ECM harness connector "B".

Press and hold the START/RER button and test for continuity of the switch circuit as per following table.

| CONTINUITY TEST OF START/RER SWITCH CIRCUIT (BUTTON PRESSED AND HELD) | | |
|---|---|---|
| FUSE BOX | ECM CONNECTOR B | RESISTANCE |
| Pin D3 | ECMB-D1 | Close to 0 Ω (continuity) |

2. If the reading is as specified, the START/RER switch and its wiring are good.
3. If a high resistance or an open circuit is measured, carry out *TESTING THE START/RER SWITCH CONTINUITY*.

### Testing the START/RER Switch Circuit Continuity

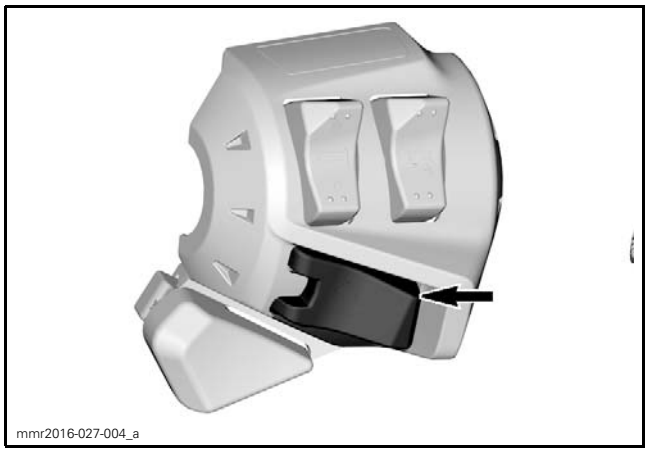


1. Disconnect the steering connector SH1. Refer to *WIRING HARNESS AND CONNECTORS* subsection.
2. Measure resistance through switch as per following table.

| START/RER SWITCH CIRCUIT CONTINUITY TEST | | |
|---|---|---|
| SWITCH POSITION | SH1 | RESISTANCE |
| Released | Pins B and C | Close to 0 Ω |
| Pressed and held | Pins H and C | Close to 0 Ω |

If the switch does not test as specified, replace the START/RER switch.

If the switch tests as specified, check for an open circuit in harness.

## STARTER SOLENOID

### Starter Solenoid Location

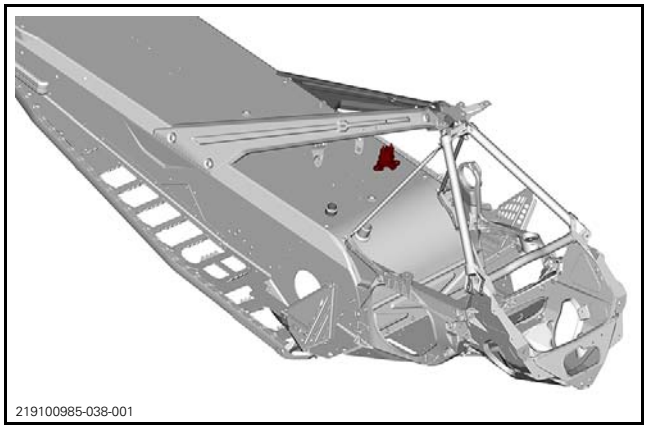


### Testing the Solenoid Input Voltage (Solenoid Coil)

1. Disconnect solenoid connector.

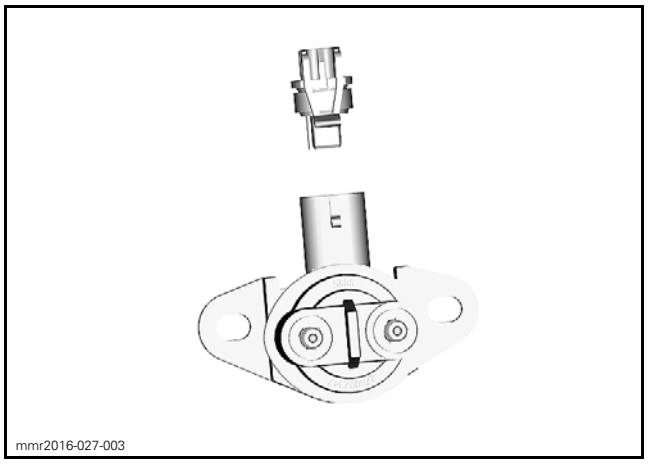


2. Set the multimeter to Vdc.
3. Install D.E.S.S. key on post.
4. Press the START/RER button to activate ECM.
5. Measure voltage.

| SOLENOID INPUT VOLTAGE TEST (SOLENOID COIL) | | |
|---|---|---|
| TEST PROBES | | VOLTAGE READING |
| Pin B | Battery ground | Battery voltage |

If test succeeded, carry out a *TESTING THE SOLENOID CONTROL CIRCUIT CONTINUITY*.

If test failed, carry out a *TESTING THE START/RER SWITCH CIRCUIT CONTINUITY*.

## Testing the Solenoid Control Circuit Continuity

1. Set the multimeter to Ω.
2. Disconnect connector "B" from ECM, refer to *WIRING HARNESS AND CONNECTORS* subsection.
3. Install the ECM adaptor tool on ECM harness connector.
4. Test continuity of wiring from solenoid to ECM as per following table.

| SOLENOID CONTROL CIRCUIT TEST | | |
|---|---|---|
| SOLENOID CONNECTOR | ECM CONNECTOR B | RESISTANCE |
| Pin A | ECMB-L4 | Close to 0 Ω (continuity) |

If test failed, repair or replace wiring/connectors.

If test succeeded, carry out a *TESTING THE SOLENOID COIL RESISTANCE*.

## Testing the Solenoid Coil Resistance

1. Set multimeter to Ω.
2. Disconnect solenoid connector.
3. Measure solenoid coil resistance as per following table.

| SOLENOID COIL RESISTANCE TEST | | |
|---|---|---|
| SOLENOID CONNECTOR | | RESISTANCE |
| Pin A | Pin B | 4.5 to 5.5 Ω |

If test fails, replace solenoid.

## Solenoid Dynamic Test

1. Depress the throttle lever to place the ECM in engine drowned mode. Hold throttle lever in place using a rubber band.
2. Set multimeter to Vdc.
3. Crank engine.
4. As engine is cranking, measure the voltage as per following tables.

| SOLENOID DYNAMIC TEST (ENGINE CRANKING) | | |
|---|---|---|
| TEST PROBES | | VOLTAGE (DC) |
| Solenoid battery post | Battery ground | Battery voltage |

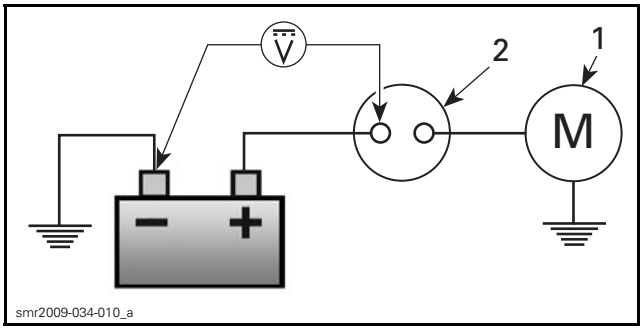


*1. Starter motor*
*2. Starter solenoid*

5. If test failed, check battery positive cable (from battery to solenoid).
6. If test succeeded, continue with next step.

| SOLENOID DYNAMIC TEST (ENGINE CRANKING) | | |
|---|---|---|
| TEST PROBES | | VOLTAGE (DC) |
| Solenoid starter post | Battery ground | Battery voltage |

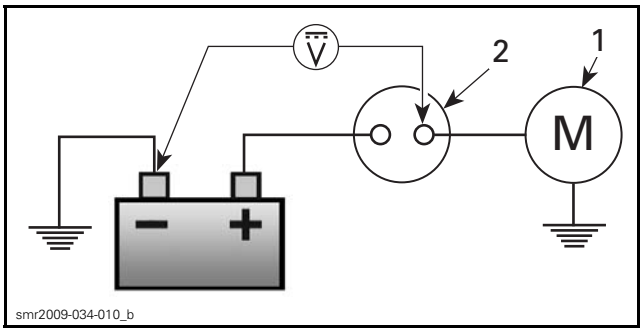


*1. Starter motor*
*2. Starter solenoid*

7. If test failed, carry out a *TESTING THE SOLENOID INPUT VOLTAGE (SOLENOID COIL)*.
8. If test succeeded, continue with next step.

| SOLENOID DYNAMIC TEST (ENGINE CRANKING) | | |
|---|---|---|
| TEST PROBES | | VOLTAGE (DC) |
| Solenoid battery post | Solenoid starter post | 0.2 Vdc max. |

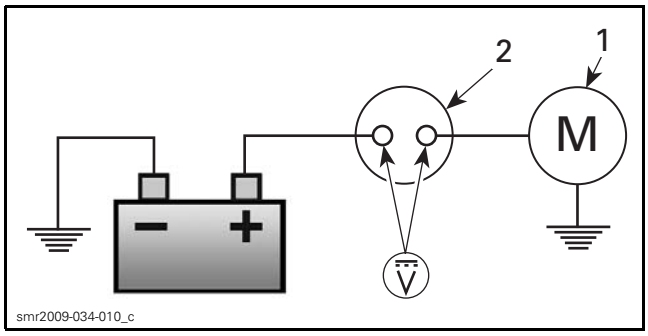


*1. Starter motor*
*2. Starter solenoid*

If test failed, replace solenoid.

If all solenoid dynamic tests are as specified, replace starter.

9. Remove rubber band from throttle lever.

10. Reinstall removed parts.

## Removing the Solenoid

1. Disconnect battery. Refer to *CHARGING SYSTEM* subsection.

**⚠ WARNING**

**Always disconnect the BLACK (-) battery cable first and reconnect last.**

2. Open LH side panel

3. Disconnect solenoid cables.

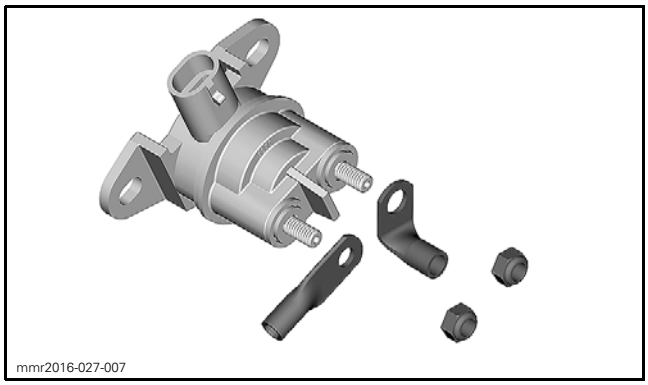


4. Disconnect starter solenoid connector.

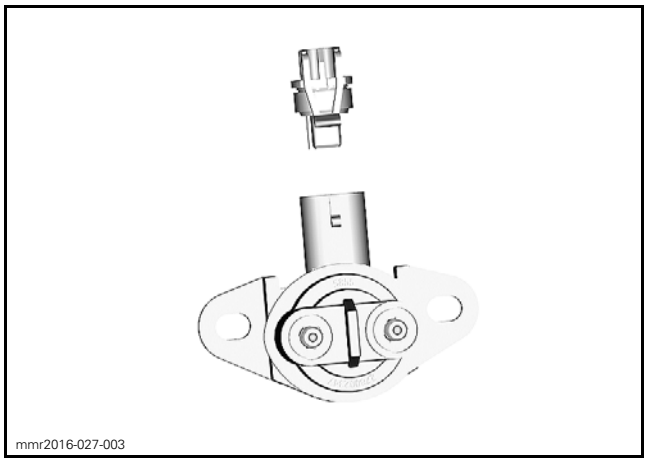


5. Pivot to remove the solenoid.

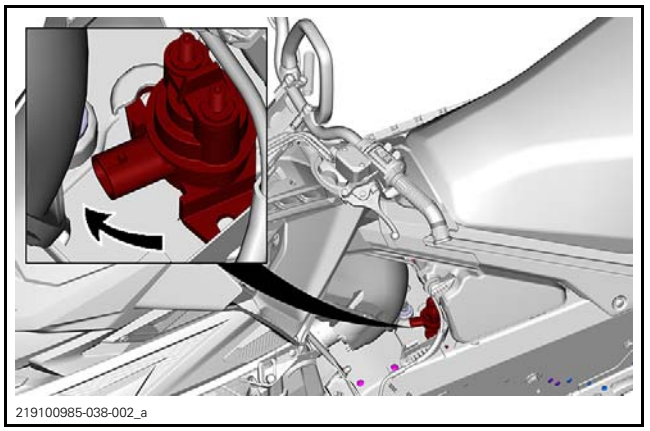


## Installing the Solenoid

The installation is the reverse of the removal procedure. However, pay attention to the following.

Apply dielectric grease under and over each connections and make sure each nut are well covered.

| COUNTRY | SERVICE PRODUCT |
|---|---|
| Scandinavia | DIELECTRIC GREASE (F) (P/N 619 600 021) |
| All other countries | DIELECTRIC GREASE (P/N 293 550 004) |

| TIGHTENING TORQUE | |
|---|---|
| Solenoid cable retaining nuts | 4 N•m ± 0.5 N•m (35 lbf•**in** ± 4 lbf•**in**) |

1. Close or slide protective caps.

2. Reconnect battery and test starter solenoid operation.

# STARTER

For starter information refer to *MAGNETO AND STARTER* subsection.

# RF DIGITALLY ENCODED SECURITY SYSTEM (RF D.E.S.S.) - ACE

## SERVICE TOOLS


| Description | Part Number | Page |
|---|---|---|
| POWER INTERFACE | 515 177 223 | 300 |


## GENERAL

### SYSTEM DESCRIPTION

The following components are specially designed for this system: ECM, D.E.S.S. key (inside tether cord cap) and engine cut-off switch.

This system allows the engine to reach pulley engagement speed only if a D.E.S.S. key is installed on engine cut-off switch and the key is recognized as valid by the ECM.

The D.E.S.S. key contains a magnet and a RFID chip.

– The magnet closes the hall effect switch inside the engine cut-off switch.
– The RFID chip contains a unique digital code. It is the equivalent of the tooth-pattern cut on a conventional ignition key.

Up to 8 D.E.S.S. keys may be programmed in the ECM memory using the B.U.D.S. The keys can also be erased individually.

NOTE: If desired, a D.E.S.S. key can be used on another vehicle equipped with the D.E.S.S. system. It only needs to be programmed for that vehicle.

#### D.E.S.S. Beeper Codes

When starting the engine with a D.E.S.S. key on the engine cut-off switch, the key is identified by the ECM and D.E.S.S. signals will be issued according to the key recognition. See table.

| D.E.S.S. SIGNAL | | DESCRIPTION | COMMENT |
|---|---|---|---|
| BEEPER | DISPLAYED MESSAGE | | |
| 2 shorts beeps | Compact digital gauge: "Good Key" Other gauges: DESS tell-tale light will flash | Valid key read | Working D.E.S.S. key. |
| Short beeps repeating slowly | CHECK KEY | Unable to read key | – Reinstall key<br>– RPM limited to 2500<br>– Check D.E.S.S. status in B.U.D.S.<br>– No voltage at RFID connector pin D |
| Shorts beeps repeating rapidly | BAD KEY | Invalid key or key not programmed | – Use the proper key for this vehicle or have the key programmed.<br>– Vehicle can not be driven. |

# PROCEDURES

## D.E.S.S. KEY

### D.E.S.S. Key Programming

Use BUDS2.

Refer to the **B.U.D.S. directory** on *KNOWLEDGE CENTER* for all BUDS related information, including:

– Current version download link
– User manual (programming keys, reading fault codes, writing data to modules etc.)
– Installation instructions
– Navigation through menus
– BRP BUDS chart

Search keyword: "BUDS".



mmr2017-025-001

## D.E.S.S. / ENGINE CUT-OFF OPERATION

Connect BUDS2, refer to *COMMUNICATION TOOLS AND BUDS*.

Navigate to the **keys** page.

Read key. Consult the sections below to troubleshoot a key problem.

### Normal Operation (Good Key)

Refer to *WIRING DIAGRAM*.

| RFID CONNECTOR PIN | SPECIFICATIONS with POWER INTERFACE (P/N 515 177 223) installed |
|---|---|
| A | ECM ground |
| B | 12 - 15 Vdc |
| C | 5 Vdc |
| D | 12 Vdc |

### Key Not Read

Possible causes:

– Damaged RFID chip
– No voltage at RFID-D connector
– No voltage at RFID-C connector

Condition can be duplicated with a magnet on the D.E.S.S. post.

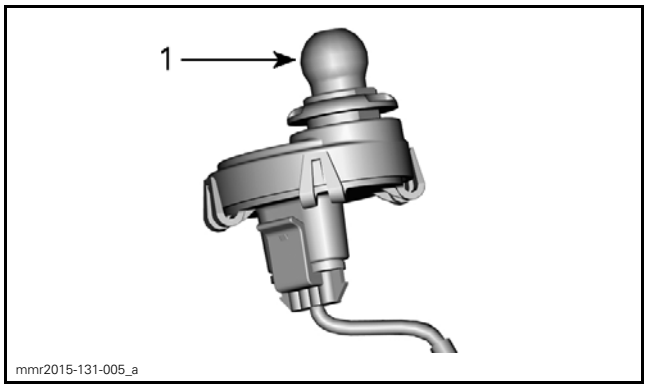

mmr2015-131-005_a

*1. D.E.S.S. post*

### Key Not Present

Possible causes:

– No key installed
– No voltage at RFID-B connector
– No ground at RFID-A connector

Condition can be duplicated by unplugging the RFID connector.

### Invalid Key

Possible causes:

– Key not programmed to ECM

## BEEPER

The beeper is integrated in the multifunction gauge and cannot be replaced alone.

If the beeper does not sound when starting the engine, check the beeper operation. Refer to *GAUGE* subsection.

# RF DIGITALLY ENCODED SECURITY SYSTEM (RF D.E.S.S.) - E-TEC

## SERVICE TOOLS

| Description | Part Number | Page |
|---|---|---|
| POWER INTERFACE | 515 177 223 | 302 |

## GENERAL

### SYSTEM DESCRIPTION

The following components are specially designed for this system: ECM, D.E.S.S. key (inside tether cord cap) and engine cut-off switch.

This system allows the engine to reach pulley engagement speed only if a D.E.S.S. key is installed on engine cut-off switch and the key is recognized as valid by the ECM.

The D.E.S.S. key contains a magnet and a RFID chip.

– The magnet closes the hall effect switch inside the engine cut-off switch.
– The RFID chip contains a unique digital code. It is the equivalent of the tooth-pattern cut on a conventional ignition key.

Up to 8 D.E.S.S. keys may be programmed in the ECM memory using the B.U.D.S. The keys can also be erased individually.

NOTE: If desired, a D.E.S.S. key can be used on another vehicle equipped with the D.E.S.S. system. It only needs to be programmed for that vehicle.

#### D.E.S.S. Beeper Codes

When starting the engine with a D.E.S.S. key on the engine cut-off switch, the key is identified by the ECM and D.E.S.S. signals will be issued according to the key recognition. See table.

| D.E.S.S. SIGNAL | | DESCRIPTION | COMMENT |
|---|---|---|---|
| BEEPER | DISPLAYED MESSAGE | | |
| 2 shorts beeps | Compact digital gauge: "Good Key" Other gauges: DESS tell-tale light will flash | Valid key read | Working D.E.S.S. key. |
| Short beeps repeating slowly | CHECK KEY | Unable to read key | – Reinstall key<br>– RPM limited to 2500<br>– Check D.E.S.S. status in B.U.D.S.<br>– No voltage at RFID connector pin D |
| Shorts beeps repeating rapidly | BAD KEY | Invalid key or key not programmed | – Use the proper key for this vehicle or have the key programmed.<br>– Vehicle can not be driven. |

# PROCEDURES

## D.E.S.S. KEY

### D.E.S.S. Key Programming

Refer to the **B.U.D.S. directory** on *KNOWLEDGE CENTER* for all BUDS related information, including:

– Download link
– User manual (installation instructions, navigation through menus, programming keys, reading fault codes, writing data to modules etc.)
– BRP BUDS chart.

## D.E.S.S. / ENGINE CUT-OFF OPERATION

Connect the BRP diagnostic software (BUDS2) to the vehicle. Refer to *COMMUNICATION TOOLS AND BUDS*.

Navigate to the **keys** page.

Read key. Consult the sections below to troubleshoot a key problem.

### Normal Operation (Good Key)

Refer to *WIRING DIAGRAM*.

| RFID CONNECTOR PIN | SPECIFICATIONS with POWER INTERFACE (P/N 515 177 223) installed |
|---|---|
| A | ECM ground |
| B | 12 - 15 Vdc |
| C | 5 Vdc |
| D | 12 Vdc |

### Key Not Read

Possible causes:

– Damaged RFID chip
– Engine stop switch is in OFF position (if equipped).
– No voltage at RFID-D connector
– No voltage at RFID-C connector

Condition can be duplicated with a magnet on the D.E.S.S. post.

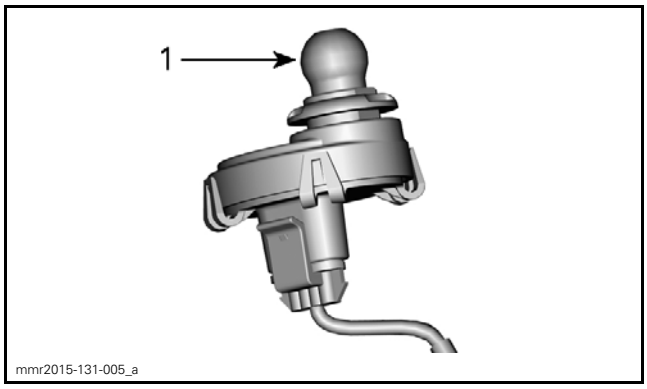


*1. D.E.S.S. post*

### Key Not Present

Possible causes:

– No key installed
– No voltage at RFID-B connector
– No ground at RFID-A connector

Condition can be duplicated by unplugging the RFID connector.

### Invalid Key

Possible causes:

– Key not programmed to ECM

## BEEPER

The beeper is integrated in the multifunction gauge and cannot be replaced alone.

If the beeper does not sound when starting the engine, check the beeper operation. Refer to *GAUGE* subsection.

# ROTAX ELECTRONIC REVERSE (RER)

## SERVICE TOOLS

| Description | Part Number | Page |
|---|---|---|
| 12 V BATTERY SUPPLY CABLE | 529 035 997 | 304 |
| DIAGNOSTIC CABLE | 710 000 851 | 304 |
| ECM ADAPTER TOOL | 529 036 166 | 304–305 |
| FLUKE 115 MULTIMETER | 529 035 868 | 304 |
| MPI-2 INTERFACE CARD | 529 036 018 | 304 |
| MPI-3 INTERFACE CARD | 529 036 353 | 304 |
| POWER INTERFACE | 515 177 223 | 304 |

## SERVICE TOOLS – OTHER SUPPLIER

| Description | Part Number | Page |
|---|---|---|
| OPTIONAL MALE-FEMALE EXTENSION SERIAL CABLE | (DB9) | 304 |

# GENERAL

The main components of the RER system are:

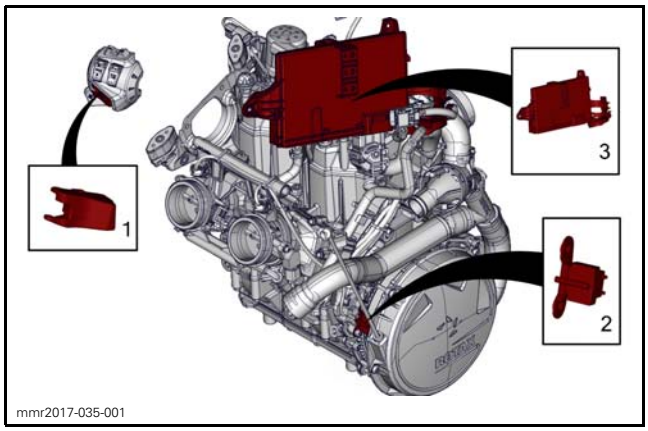


*1. RER Switch*
*2. Crankshaft position sensor (CPS)*
*3. ECM*

The ECM receives signals from the CPS for forward and reverse engine rotation.

The ECM recognizes a signal sent by the RER switch.

When the RER switch is activated and the engine is running at or near idle speed, the ECM cuts off ignition, therefore causing the engine RPM to drop off gradually.

When the engine reaches a predetermined low RPM (approximately 450 RPM), the ECM initiates an ignition spark that is greatly advanced in timing, creating a thrust which reverses engine rotation.

If the following condition are not meet, the RER function is disabled and nothing takes place when the RER button is pressed.

– RPM between 1000 and 4300 RPM
– Throttle lever released (TPS opening below 2%)
– Vehicle speed below 25 km/h (16 MPH).

NOTE: Refer to *E-TEC DIRECT FUEL INJECTION* subsection for crankshaft position sensor (CPS) testing.

# TROUBLESHOOTING

## DIAGNOSTIC TIPS

### RER Does Not Respond When Depressing RER Button

Check the following:

– RER fuse condition
– Check if the vehicle is properly configured in B.U.D.S. (with Mechanical Reverse check box not selected)
– *TESTING RER SWITCH SIGNAL WITH B.U.D.S.*

### Engine Stops after Pressing RER Button

This confirms that RER control circuits function normally. Check the following:

– CPS
– Engine compression, refer to *TOP END* subsection.
– Reed valves leaking, refer to applicable *TOP END* subsection

– RAVE valve adjustment or sticking, refer to *RAVE* subsection
– Drive belt adjustment, refer to *DRIVE SYSTEM AND BRAKE* subsection
– ECM
– Stator, refer to *MAGNETO SYSTEM* subsection
– Capacitor, refer to *CHARGING SYSTEM* subsection.

Ensure 55V system is in good condition at idle.

### RER Functions Erratically

1. Check engine compression.

NOTE: A low compression resulting in loss of engine power may cause the RER to function erratically, leading you to believe the problem is in the electronic control system.

2. Low compression may be due to the following items:
   – REED valves leaking or broken
   – RAVE valves sticking
   – Worn engine parts.
3. Check piston condition through the intake and exhaust ports.

NOTE: Look for scoring on piston skirts. Scored piston skirts or other mechanical problems resulting in excessive friction which may cause the RER to function erratically.

4. Also check the following:
   – RER switch for intermittent operation, refer to *TESTING RER SWITCH CONTINUITY* in this subsection
   – Loose (intermittent) electrical connections
   – Drive belt adjustment, refer to *DRIVE SYSTEM AND BRAKE* subsection
   – ECM.

# PROCEDURES

| REQUIRED TOOLS | |
|---|---|
| FLUKE 115 MULTIMETER (P/N 529 035 868) |  |
| ECM ADAPTER TOOL (P/N 529 036 166) |  |

## RER SWITCH

### Testing RER Switch Signal with BUDS2

1. Connect vehicle to BUSD2.Download from *KNOWLEDGE CENTER*. Refer to *COMMUNICATION TOOLS AND B.U.D.S.* subsection for proper connection instructions.

| REQUIRED TOOLS | |
|---|---|
| MPI-2 INTERFACE CARD (P/N 529 036 018) or MPI-3 INTERFACE CARD (P/N 529 036 353) |  |
| DIAGNOSTIC CABLE (P/N 710 000 851) |  |
| POWER INTERFACE (P/N 515 177 223) |  |
| 12 V BATTERY SUPPLY CABLE (P/N 529 035 997) |  |
| OPTIONAL MALE-FEMALE EXTENSION SERIAL CABLE (P/N (DB9)) |  |

NOTE: A 12 volt battery is required to activate the electrical system.

2. In BUDS2, select the **Scan** button.
3. Select the **Measurements** tab.
4. Raise track and start the engine.
5. Press vehicle RER button and look for the **START/RER Button** status to change.

If the **START/RER Button** status changes, it indicates the RER switch, ECM and wiring are functioning properly. Test CPS. Refer to *E-TEC DIRECT FUEL INJECTION* subsection.

If the**START/RER Button** status does not change, carry out the RER switch tests that follow.

NOTE: When the B.U.D.S. RER test is carried out with engine running and reverse engages, the RER light on the **ECM Monitoring** page and the reverse light on the **Cluster Monitoring** page should both turn ON.

### Testing RER Switch Continuity

1. Measure continuity of RER switch as per following table.

*Models with multifunction switch on handlebar*

2. Disconnect the RER switch (SH) connector.

| SWITCH POSITION | SH CONNECTOR | | RESISTANCE |
|---|---|---|---|
| Released | SH-1 | SH-2 | Continuity (0.4 Ω max.) |
| Press and held | SH-8 | SH-2 | Continuity (0.4 Ω max.) |

*Models with console switches*

3. Disconnect the RER connector.

| SWITCH POSITION | RER CONNECTOR | | RESISTANCE |
|---|---|---|---|
| Release | RER-1 | RER-2 | O.L. |
| Press and hold | RER-1 | RER-2 | Continuity (0.4 Ω max.) |

If continuity test fails, replace switch.

If continuity tests were good, measure voltage as per *TESTING RER SWITCH CIRCUIT*.

## Testing RER Switch Circuit

*Models with multifunction switch on handlebar*

1. Backprobe SH2 connector pins as per table.
2. Lift track and idle vehicle.

| (SH) CONNECTOR | | SPECIFICATION |
|---|---|---|
| SH-1 | Chassis ground | 0Ω |
| SH-2 | START / RER SIGNAL | Chassis ground when switch is released |
| | | 12 volts when switch is pressed and held |
| SH-8 | Chassis ground | Unswitched 12 Vdc |

If chassis ground SH-1 and 12 volts SH-8 measurements are good **but** START / RER SIGNAL SH-2 measurements are incorrect, replace switch.

If chassis ground is not measured, repair the wire between chassis ground and SH connector.

If 12 votls is not measured, repair the wire between RER fuse and SH connector.

## Testing RER Switch Circuit

*Models with console switches*

1. Set multimeter to Vdc.
2. Backprobe RER connector pins as per table.
3. Lift track and idle vehicle.

| (RER) CONNECTOR | | SPECIFICATION |
|---|---|---|
| RER-2 | Chassis ground | 12 Vdc |
| RER-1 | Chassis ground | No voltage when switch is released |
| | | 12 volts when switch is pressed and held |

If no voltage is present at RER-1 when switch is pressed and held, replace switch.

If no voltage is present at RER-2, repair the wire between RER fuse and RER-2 connector.

## Testing RER Switch Signal to ECM

*Models with electric starter*

1. If applicable, ensure the (SD) starter solenoid connector is disconnected.

*All models*

2. Disconnect ECMB connector and install the ECM ADAPTER TOOL (P/N 529 036 166).
3. Test wire continuity between the RER fuse and the ECMB connector as follows.

| RER FUSE (F1) | ECMB CONNECTOR | RESISTANCE |
|---|---|---|
| FB-H | ECMB-A3 | RER switch pressed and held Continuity (0.2 Ω max.) |
| FB-H | ECMB-A3 | RER switch released Infinite (OL) |

If continuity test is good, try a new ECM.

If test fails, repair or replace wiring.

# BEEPER (REVERSE ALARM)

The reverse alarm (beeper) is integrated in the gauge cluster and is also used for emitting the vehicle beep codes. Refer to applicable *GAUGE* subsection for the testing procedure.

# LIGHTS (ALL EXCEPT 600 ACE)

## SERVICE TOOLS

| Description | Part Number | Page |
|---|---|---|
| 12 V BATTERY SUPPLY CABLE | 529 035 997 | 307 |
| POWER INTERFACE | 515 177 223 | 307 |

## GENERAL

Refer to *WIRING HARNESS AND CONNECTORS* for electrical connector locations.

**⚠ WARNING**

**Torque wrench tightening specifications must be strictly adhered to. Locking devices must be replaced with new ones when removed (e.g.: locking tabs, elastic stop nuts, self-locking fasteners, cotter pins, etc.).**

## SYSTEM TESTING

All vehicle lights are powered from the primary 12 Vdc circuit. This circuit is powered from and controlled by the ECM when the engine reaches 800 RPM. Refer to *POWER DISTRIBUTION AND GROUNDS* subsection for more information on how power is distributed to various systems.

For models without a battery, connect the following tools in order to provide electrical power to the vehicle.

| REQUIRED TOOLS |
|---|
| – POWER INTERFACE (P/N 515 177 223)<br>– 12 V BATTERY SUPPLY CABLE (P/N 529 035 997)<br>– 12-volt battery |

## PROCEDURES

## HEADLIGHTS

### Removing Headlight Bulb

1. Remove gauge and trim. Refer to *BODY* subsection.
2. Remove front glove box. Refer to *BODY* subsection.
3. Unplug electrical connector.

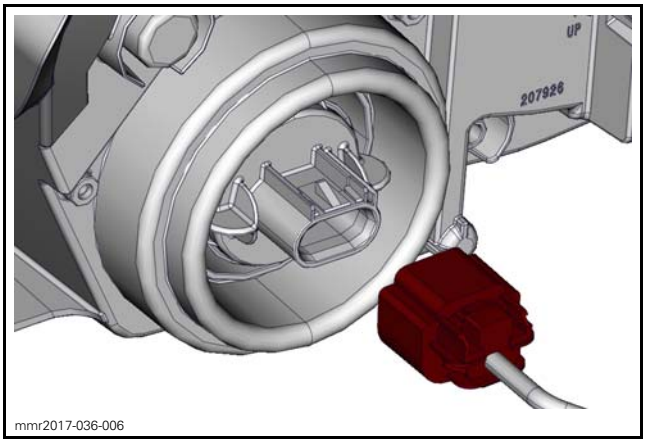

mmr2017-036-006

4. Turn bulb socket to unlock and remove bulb.

NOTE: Ensure bulb seal stays in place.

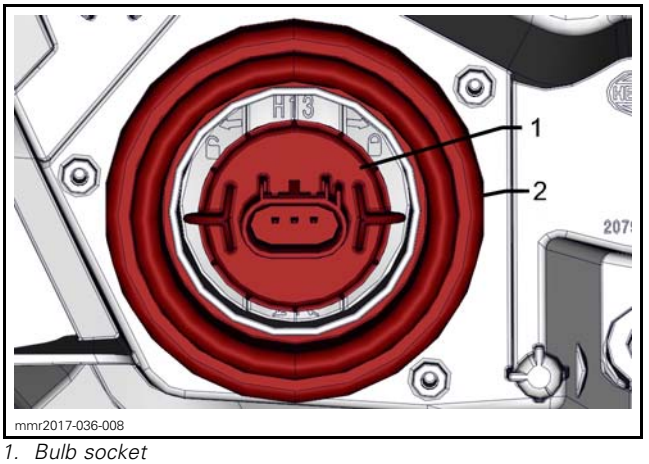

mmr2017-036-008

*1. Bulb socket*
*2. Bulb seal*

### Installing Headlight Bulb

***NOTICE*** **Never touch glass portion of a halogen bulb with bare fingers, it shortens its operating life. If glass is touched, clean it with isopropyl alcohol which will not leave a film on the bulb.**

Reverse removal procedure.

### Measuring Headlight Input Voltage

1. Disconnect headlight connector(s).
2. Provide electrical power to the headlights for testing.

3. Read voltage at headlight connector as follows.

| SWITCH POSITION | WIRE COLOR (HEADLIGHT CONNECTOR) | | VOLTAGE |
|---|---|---|---|
| LO beam | GY/OG | BK | Battery voltage (Vdc) |
| HI beam | GY/WH | BK | |

If voltage is inadequate, carry out the following to find the source of the problem:
- Test headlights dimmer switch.
- Test wiring harness and connectors.
- Test primary 12 Vdc system. Refer to *CHARGING SYSTEM*.

## Testing Headlight Dimmer with BUDS2

The headlight dimmer switch status can be monitored using BUDS2.

## Testing Headlight Dimmer Switch Continuity

1. Disconnect the applicable connector depending on gauge, refer to following tables.
2. Test switch circuits on applicable connector on switch side as per table.

| MODELS WITH COMPACT DIGITAL GAUGE | | | |
|---|---|---|---|
| SWITCH POSITION | DIMMER PINS | | SPECIFICATION |
| HIGH | 2 | 4 | Close to 0 Ω |
| | 2 | 1 | Infinite (OL) |
| LOW | 2 | 4 | Infinite (OL) |
| | 2 | 1 | Close to 0 Ω |

| MODELS WITH ANALOG/DIGITAL GAUGE | | | |
|---|---|---|---|
| SWITCH POSITION | SH PINS | | SPECIFICATION |
| HIGH | 12 | 7 | Close to 0 Ω |
| | 6 | 7 | Infinite (OL) |
| LOW | 12 | 7 | Infinite (OL) |
| | 6 | 7 | Close to 0 Ω |

If tests were good, switch is functioning properly.

If any test failed, check wiring and connections going to switch.

If test of wiring and connections was good, replace switch.

## Aiming Headlight Beam

Beam aiming is correct when center of high beam is 25 mm (1 in) below the headlight horizontal center line, scribed on a test surface, 381 cm (12 ft 6 in) away.

1. Place the vehicle on a flat surface perpendicular to test surface (wall or screen) and 381 cm (12 ft 6 in) away from it.
2. Ask rider to sit on vehicle seat, or apply equivalent weight on the vehicle.
3. Select **high** beam.
4. Measure headlight center distance from ground. Scribe a line at this height on test surface (wall or screen). Light beam center should be 25 mm (1 in) below scribed line.

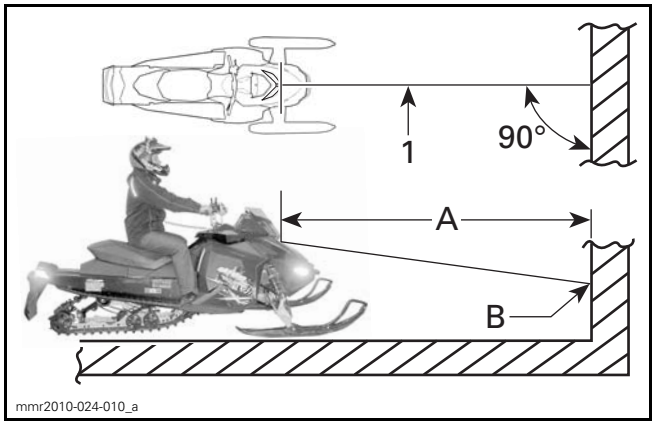


*TYPICAL*
*1. Headlight center line*
*A. 381 cm (12 ft 6 in)*
*B. 25 mm (1 in) below center line*

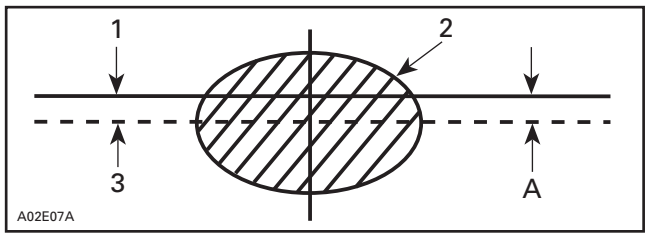


*1. Headlight horizontal*
*2. Light beam (high beam) (projected on the wall)*
*3. Light beam center*
*A. 25 mm (1 in)*

### Adjusting Beam

Open the front storage compartment.

Turn knob to adjust the beam height.

NOTE: Avoid reaching extreme adjustments as the headlight assembly might move out of position.

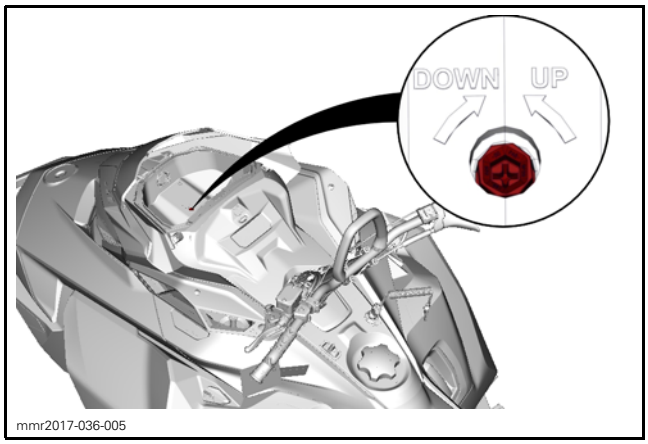

mmr2017-036-005

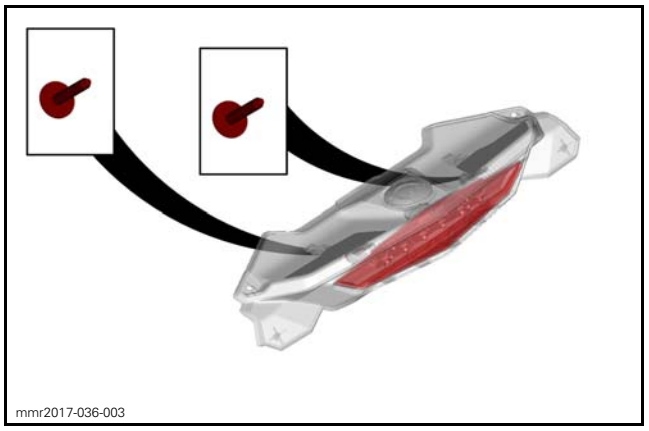
mmr2017-036-003

# TAILLIGHT / BRAKE LIGHT

## Replacing Taillight

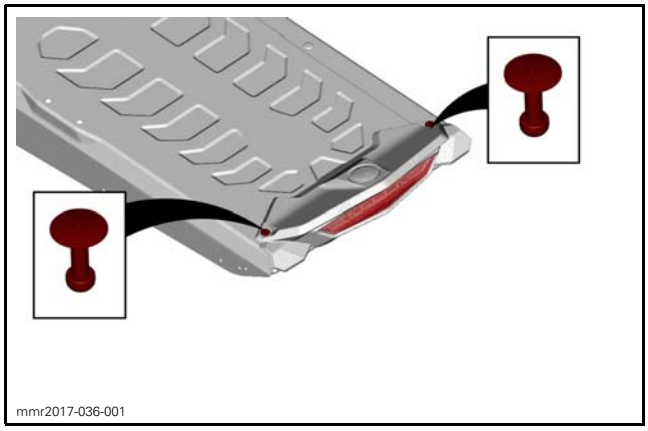
mmr2017-036-001

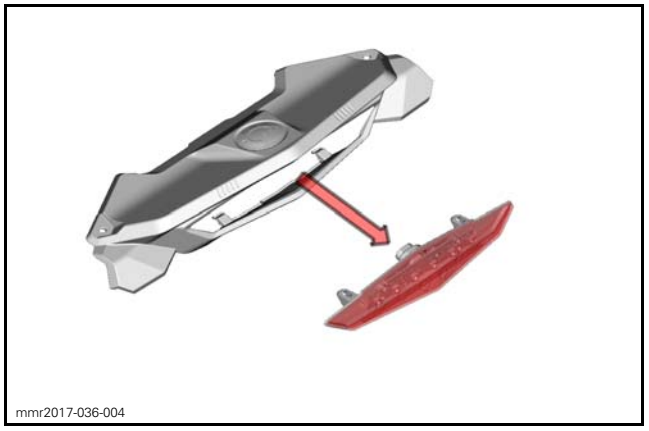
mmr2017-036-004

Replace taillight.

Installation is the reverse of removal. However pay attention to the following.

| TIGHTENING TORQUE | |
|---|---|
| Taillight retaining screw | 0.4 N•m (4 lbf•**in**) |

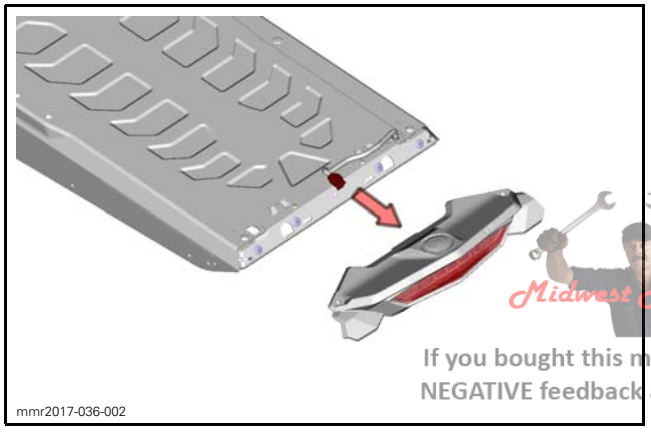
mmr2017-036-002

Midwest Manuals
Green Manuals
Paperless Manuals
For a Better Tomorrow
www.green-manuals.com
If you bought this manual from any other seller please leave them
NEGATIVE feedback and notify us at bestshopmanuals@gmail.com

# LIGHTS (600 ACE)

## SERVICE TOOLS

| Description | Part Number | Page |
|---|---|---|
| 12 V BATTERY SUPPLY CABLE | 529 035 997 | 311 |
| POWER INTERFACE | 515 177 223 | 311 |

## GENERAL

NOTE: It is a good practice to check for fault codes using BUDS2 software as a first troubleshooting step. Refer to *DIAGNOSTIC AND FAULT CODES* subsection.

**⚠ CAUTION** The battery charging fuse should always be removed before carrying out any maintenance on the vehicle to prevent any unexpected electrical activation. Removal of this fuse isolates the battery from the vehicle electrical system, except for the starter relay input terminal.

**⚠ WARNING**

Torque wrench tightening specifications must be strictly adhered to. Locking devices must be replaced with new ones when removed (e.g.: locking tabs, elastic stop nuts, self-locking fasteners, cotter pins, etc.).

## SYSTEM TESTING

For models without a battery, connect the following tools in order to provide electrical power to the vehicle.

| REQUIRED TOOLS |
|---|
| – POWER INTERFACE (P/N 515 177 223)<br>– 12 V BATTERY SUPPLY CABLE (P/N 529 035 997)<br>– 12-volt battery |

## TROUBLESHOOTING

## LIGHTING SYSTEM TESTING

If a light does not come ON, carry out the following:

– Obtain access to the bulb and make sure it is not burnt.
– Test for input voltage to the bulb.
– Test for continuity of the ground circuit.
– Test the applicable control switch (brake switch, headlight switch).

## PROCEDURES

## HEADLIGHTS

### Headlight Bulb Removal

1. Open the front storage compartment by pulling the tab.

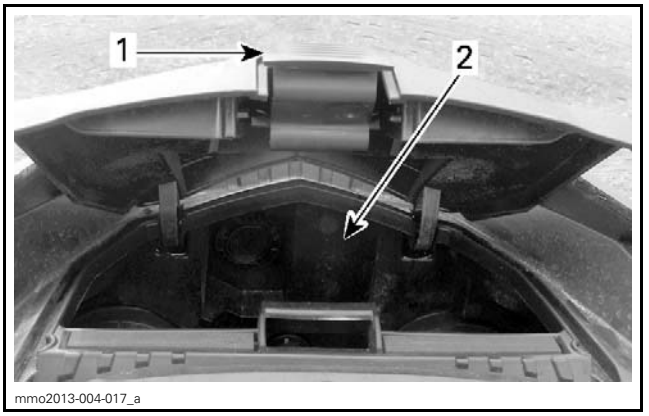

mmo2013-004-017_a

*1. Tab*
*2. Storage compartment*

2. Remove the applicable rubber boot.

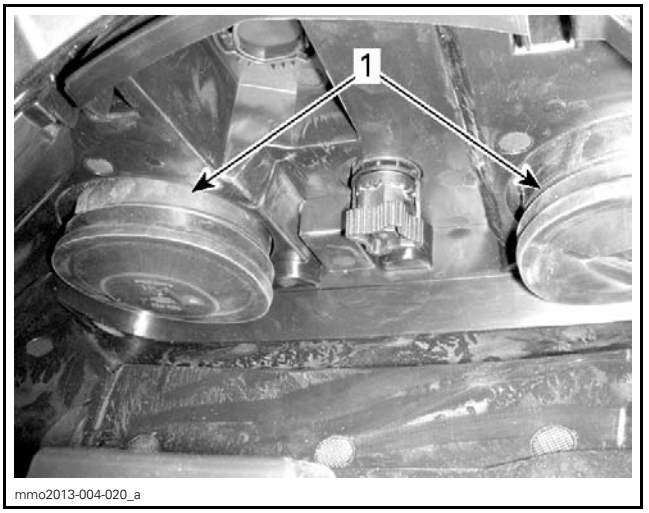

mmo2013-004-020_a

*1. Rubber boots*

3. Disconnect electrical connector.

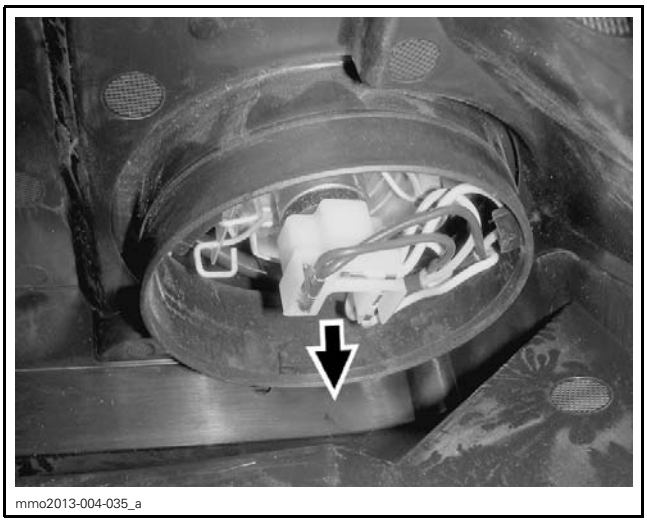
mmo2013-004-035_a

*ELECTRICAL CONNECTOR*

4. Press and pull both sides of the retaining clip at the same time to release it from bulb support.

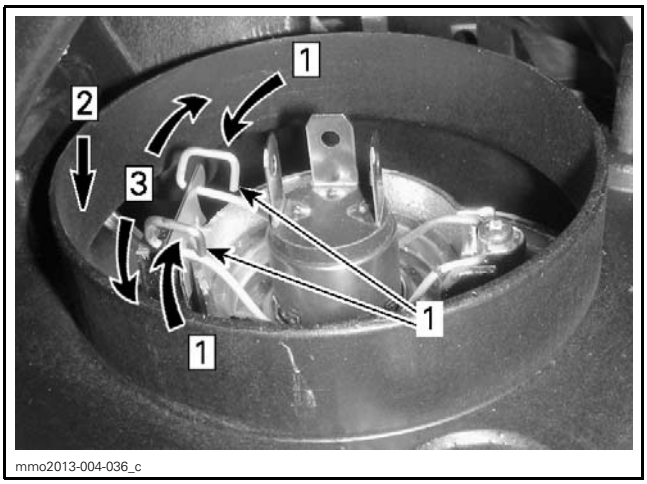

mmo2013-004-036_c

*Step 1: Push both sides*
*Step 2: Push down to release*
*Step 3: Release both sides*

*1. Retaining clip*

## Headlight Bulb Installation

**NOTICE** **Never touch glass portion of a halogen bulb with bare fingers, it shortens its operating life. If glass is touched, clean it with isopropyl alcohol which will not leave a film on the bulb.**

1. Insert bulb in headlight.

NOTE: Widest alignment tab on bulb should be at top of headlight.

2. Insert top of bulb holder (spring clip) as you squeeze the two sides inwards. Release bulb holder so that it locks in the grooves on either side of headlight.

3. Connect electrical connector.

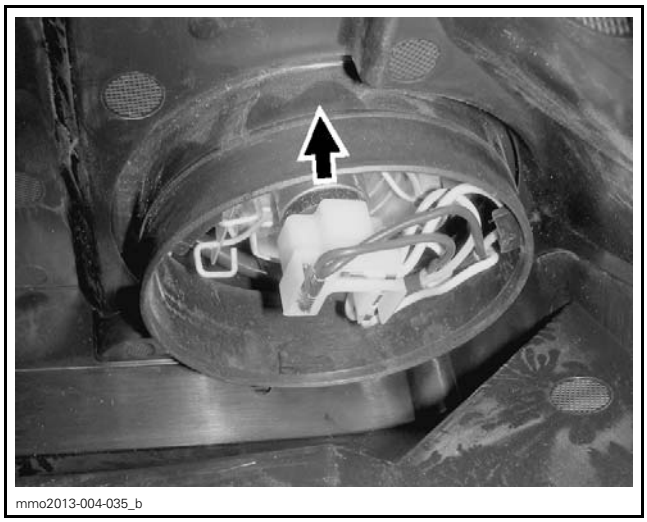
mmo2013-004-035_b

*ELECTRICAL CONNECTOR*

4. Install rubber boot cover. Ensure cover is properly inserted in groove provided in the headlight, and around the base of the bulb.

NOTE: Make sure to properly reinstall both rubber boots to ensure that no humidity gets inside the headlamp. Humidity can create fog inside the headlamp.

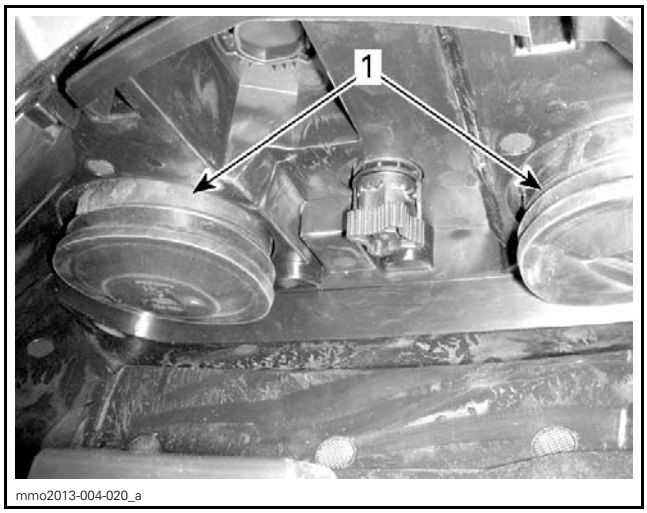

mmo2013-004-020_a

*1. Rubber boots*

5. Always test light operation after bulb replacement.

## Headlight Input Voltage Test

If a headlight does not function, proceed as follows.

1. Disconnect headlight connector(s).
2. Provide electrical power to the headlights for testing.
3. Read voltage at headlight connector as follows.

| SWITCH POSITION | WIRE COLOR (HEADLIGHT CONNECTOR) | | VOLTAGE |
|---|---|---|---|
| LO beam | HL-B | HL-A | Battery voltage (Vdc) |
| HI beam | HL-C | HL-A | |

If voltage is inadequate, carry out the following to find the source of the problem:

– Test headlights dimmer switch. Refer to *HEADLIGHT DIMMER SWITCH CONTINUITY TESTING* in this subsection.
– Test wiring harness and connectors.
– Test primary 12 Vdc system. Refer to *CHARGING SYSTEM*.

## Headlight Dimmer Switch Test with BUDS2.

1. Using the BUDS2 software, select the **Measurements** tab.
2. On the bottom of the page, choose the **Cluster** tab.
3. Set vehicle dimmer switch to High Beam and look for applicable indicator light in the **Switch inputs** field to turn green.

If the indicator light come ON in BUDS2, the dimmer switch is functioning correctly.

## Headlight Dimmer Switch Continuity Test

1. Disconnect the SH1 connector (12 positions).

Refer to *WIRING HARNESS AND CONNECTORS* for connector location.

2. Test switch circuits on SH1 connector (12 positions) on harness side as per table.

| HEADLIGHT DIMMER SWITCH CONTINUITY TEST | | | |
|---|---|---|---|
| SWITCH POSITION | SH1 | | RESISTANCE |
| HIGH | SH1-M | SH1-G | Close to 0 Ω |
| | SH1-F | | Infinite (OL) |
| LOW | SH1-F | | Infinite (OL) |
| | SH1-M | | Close to 0 Ω |

If tests were good, switch is functioning properly.

If any test failed, check wiring and connections going to switch.

If test of wiring and connections was good, replace switch.

## Headlight Beam Aiming

Beam aiming is correct when center of high beam is 25 mm (1 in) below the headlight horizontal center line, scribed on a test surface, 381 cm (12 ft 6 in) away.

1. Place the vehicle on a flat surface perpendicular to test surface (wall or screen) and 381 cm (12 ft 6 in) away from it.
2. Ask rider to sit on vehicle seat, or apply equivalent weight on the vehicle.
3. Select **high** beam.
4. Measure headlight center distance from ground. Scribe a line at this height on test surface (wall or screen). Light beam center should be 25 mm (1 in) below scribed line.

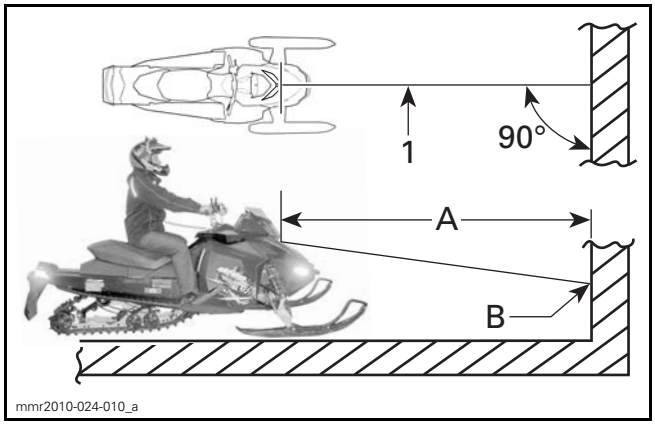


*TYPICAL*
*1. Headlight center line*
*A. 381 cm (12 ft 6 in)*
*B. 25 mm (1 in) below center line*

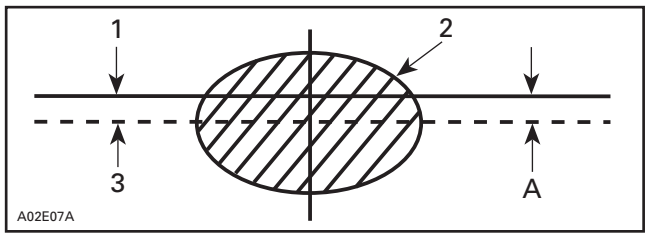


*1. Headlight horizontal*
*2. Light beam (high beam) (projected on the wall)*
*3. Light beam center*
*A. 25 mm (1 in)*

### Beam Aiming Adjustment

Open the front storage compartment.

Turn knob clockwise to lower the beam height.

Turn knob counterclockwise to raise the beam height.

NOTE: Avoid reaching extreme adjustments as the headlight assembly might move out of position.

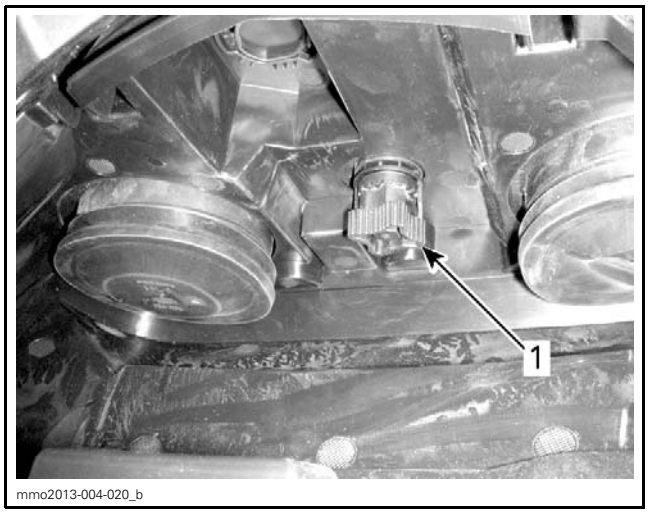


*TYPICAL*
*1. Knob*

# TAILLIGHT

## Taillight Replacement

Remove both retaining bolts securing rear taillight to frame.

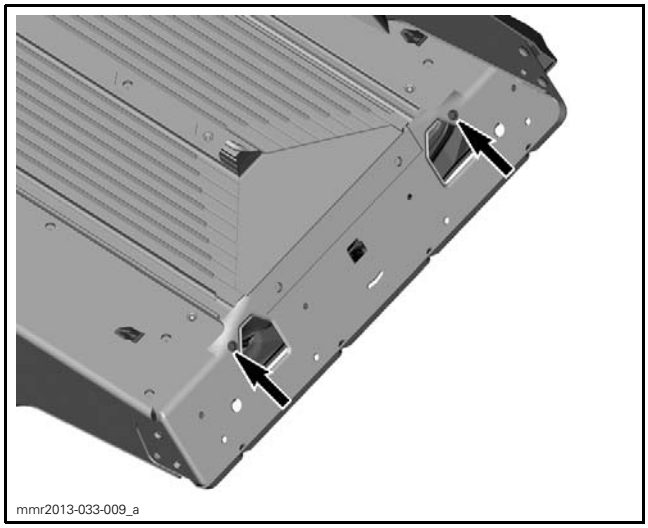


*RETAINING BOLTS LOCATION - VIEWED FROM UNDER*

Pull rear taillight support out of location and disconnect taillight connector.

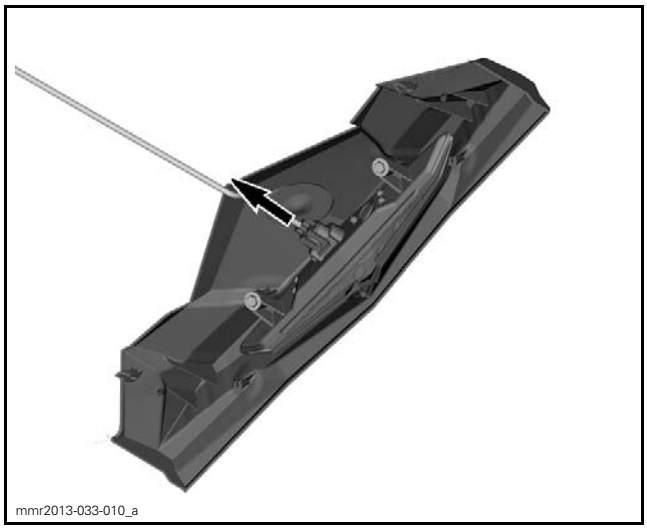


*TAILLIGHT CONNECTOR DISCONNECTION*

Remove both retaining screws securing taillight to taillight support.

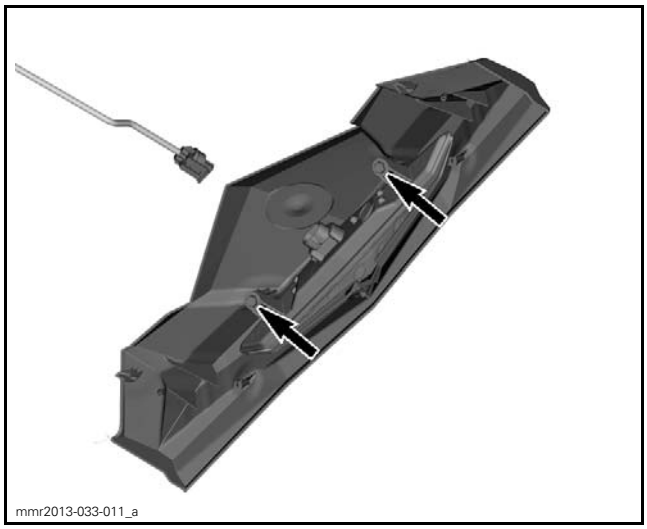


*RETAINING BOLTS SECURING TAILLIGHT TO TAILLIGHT SUPPORT*

Replace taillight.

Installation is the reverse of removal. However pay attention to the following.

| TIGHTENING TORQUE | |
|---|---|
| Taillight retaining screw | 0.8 N•m ± 0.2 N•m (7 lbf•**in** ± 2 lbf•**in**) |

# GAUGE 4.5" DIGITAL DISPLAY

## SERVICE TOOLS


| Description | Part Number | Page |
|---|---|---|
| FLUKE 115 MULTIMETER | 529 035 868 | 315 |


## GENERAL

Most of the electrical tests require the following tool.

| REQUIRED TOOL | |
|---|---|
| FLUKE 115 MULTIMETER (P/N 529 035 868) |  |

Refer to *WIRING DIAGRAM INFORMATION* subsection for diagnostic tips on troubleshooting electrical problems.

**NOTICE** It is recommended to always disconnect the battery when replacing any electrical component. Always disconnect battery as specified, BLACK (-) cable first.

## INDICATOR LAMPS DESCRIPTION

Important information about vehicle condition is displayed on the multifunction gauge. When starting the engine, always look at the gauge for any indicator lamps or special messages.

Important information messages can also be displayed temporarily in the lower display to assist indicator lamps.

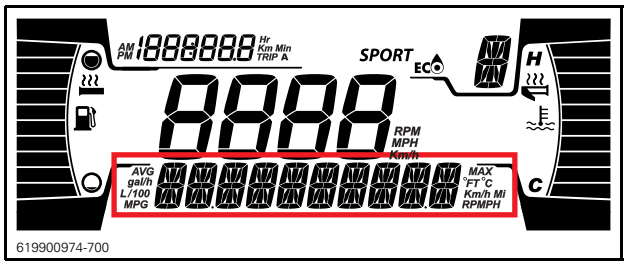


*LOWER DISPLAY*

NOTE: Depending on the vehicle, not all the indicator lamps and messages will be applicable.

| INDICATOR LAMPS (MALFUNCTIONS) | | | |
|---|---|---|---|
| INDICATOR LAMP(S) | DIGITAL WARNING | CAUSE | WHAT TO DO |
| None | BAD KEY | Wrong or defective key | - Use the right key for the vehicle.<br>- Program a new key if the previous key is defective.<br>- Check wiring and connectors. Refer to the *WIRING DIAGRAM*. |
| None | BELT OVERLOAD | Belt reached its limit | - Stop vehicle.<br>- Inspect drive belt. Replace as required. |
| ON | HIGH ENGINE TEMPERATURE | Engine is overheating | - Stop and wait for engine to cool off.<br>- Check for leaks.<br>- Check and adjust the coolant level. |

| INDICATOR LAMPS (MALFUNCTIONS) | | | |
|---|---|---|---|
| INDICATOR LAMP(S) | DIGITAL WARNING | CAUSE | WHAT TO DO |
|  ON | LO BATT VOLT or HI BATT VOLT | Low or high battery voltage | - Recharge battery.<br>- Check battery connections.<br>- Check the charging system. |
|  ON | BRAKE | Throttle lever is applied when park brake is on | - Disengage park brake. |
|  ON | CHECK ENGINE | Engine management component malfunction | - Stop the engine. The cluster must be completely shuts down. |
|  FLASHING | LIMP HOME MODE | Important engine management component | - Connect the vehicle to the BRP diagnostic software (BUDS2). Check faults codes and perform recommended actions. |
|  ON | STOP ENGINE (ACE engines) | Low oil pressure | - Check for oil leaks.<br>- Check and adjust the engine . |
| | LOW OIL (E-TEC engines) | Low oil tank level | |
|  ON | Variable messages - The message changes in accordance with the defective component. | | |

# TROUBLESHOOTING

## DIAGNOSTIC TIPS

**IMPORTANT:** When solving an electrical problem, the first thing to do is to check the battery condition as well as its cables and connections.

Make sure the battery is fully charged or install a power pack for any tests that involves a prolonged "key ON" period. If battery voltage gets too low, not only test results can be altered, but the vehicle electrical system may not operate normally.

Pay attention to ground wires. They could become loose or corroded which causes them to act as an additional load in a circuit, dropping voltage and reducing current to components. Some components may be grounded through their outer casing and mounted hardware. This should also be considered.

### Electrical Connectors

Pay particular attention to ensure that pins are not out of their connectors, loose, or damaged. The troubleshooting procedures may not cover problems resulting from one of these causes.

**NOTICE** Ensure all terminals are properly crimped on wires and connector housings are properly fastened. When replacing any electric or electronic part(s), always check electrical connections. Make sure that they are clean, corrosion-free, tight and make good contact. The voltage and current might be too weak to go through dirty or corroded connector pins or terminals.

## MULTIFUNCTION GAUGE TROUBLESHOOTING

### GAUGE FUNCTIONS INOPERATIVE OR WORKING INTERMITTENTLY

1. Power supply or ground problem
   - *Check power supply and ground circuits.*

# PROCEDURES

## MULTIFUNCTION GAUGE



219001961-100_a

### Testing the Multifunction Gauge

Before beginning any troubleshooting, test or repair, always check for fault codes.

1. Check for fault codes using BUDS2.
2. Record all fault codes, then erase them.
3. Perform a complete shutdown of the electrical system and reactivate it.
4. Check fault codes. If a previous fault codes reappears, perform the required service actions.

#### Testing the Multifunction Gauge Using BRP Diagnostic Software (BUDS2)

Connect the vehicle to the BRP diagnostic software (BUDS2).

In BUDS2, go to:

– **Functions** page
– **Cluster** button
– **Routines - Execute Cluster WOW test**.

All indications will come and stay ON so that you can verify each indication.

NOTE: The **WOW Test** only tests the gauge **LEDs** and **LCD**. It does not test the actual circuit functions related to each indication.

#### Testing the Multifunction Gauge Power Input

If the multifunction gauge is inoperative, first check for fault codes with BRP Diagnostic Software, record all faults then erase them. Reactivate the electrical system and recheck for faults. If any fault code appears, perform service actions required. Refer to *COMMUNICATION TOOLS* subsection.

1. Remove multifunction gauge.
2. Perform the test at multifunction gauge connector as per following illustration and tables.

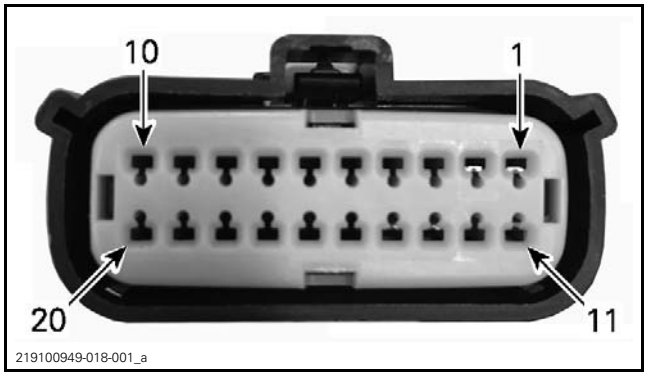

219100949-018-001_a

*MULTIFUNCTION GAUGE CONNECTOR (PIN-OUT)*

| MULTIFUNCTION GAUGE POWER TEST | | | |
|---|---|---|---|
| CL_A CONNECTOR | BATTERY | IGNITION POSITION | RESULTS |
| Multifunction connector pin 1 | Negative (-) post | Any | Close to battery voltage |
| Multifunction connector pin 11 | | ON | Close to battery voltage |

If there is no power at pin 1, check fuse F4 and the related circuit.

If there is no power at pin 11, in check fuse F2 and the related circuit.

If the power test is within specification, continue with *TESTING THE MULTIFUNCTION GAUGE GROUND CIRCUIT*.

#### Testing the Multifunction Gauge Ground Circuit

Test as per the following table.

| MULTIFUNCTION GAUGE GROUND TEST | | |
|---|---|---|
| CL CONNECTOR | BATTERY | RESULT |
| Pin 2 | Negative (-) post | Close to 1 Ω |

If the ground at pin 2 is not within specification, check the related circuit.

If the ground tested to specification, continue with *TESTING THE MULTIFUNCTION GAUGE CAN WIRE CIRCUIT*.

#### Testing the Multifunction Gauge CAN Circuit

1. Remove the front service cover for access to the DLC (Diagnostic Link Connector). Refer to *BODY* subsection.
2. Test as per the following table.

| MULTIFUNCTION GAUGE CAN WIRE TEST | | |
|---|---|---|
| CL CONNECTOR | DLC | RESULTS |
| Pin 13 (CAN HI) | Pin 1 | Close to 0.4 Ω |
| Pin 14 (CAN LO) | Pin 2 | Close to 0.4 Ω |

If the CAN wire verification test fails, check the related circuit.

If the multifunction gauge functions, however there is a suspected communication problem with another component, perform this test between the multifunction gauge and that component.

If the multifunction gauge power, ground and CAN verification tests are all to specifications and the multifunction gauge is inoperative, replace the multifunction gauge.

### Removing the Multifunction Gauge

Remove gauge support. Refer to procedure in *BODY* subsection

Disconnect the gauge connector. Remove following fasteners.

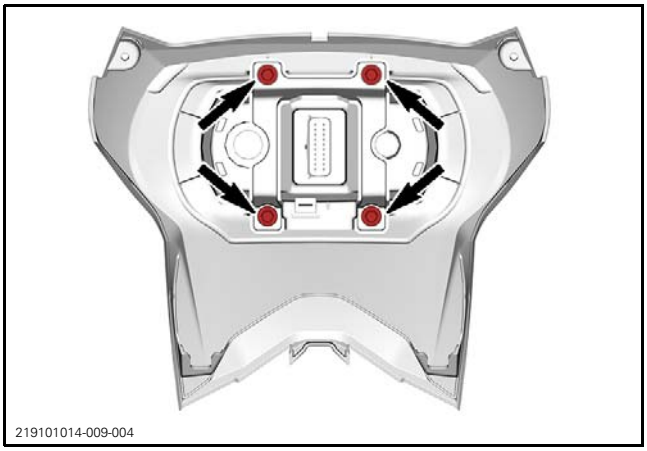


### Installing the Multifunction Gauge

The installation is the reverse of the removal procedure. However, pay attention to the following.

| TIGHTENING TORQUE | |
|---|---|
| Multifunction gauge retaining screws | 1 N•m ± 0.2 N•m (9 lbf•**in** ± 2 lbf•**in**) |

If the multifunction gauge was replaced, connect the vehicle to the BRP diagnostic software (BUDS2) and apply any available updates.

When updates are completed, perform the following:

– Transfer the vehicle mileage as described in *VEHICLE MILEAGE TRANSFER*.
– Change settings as per customer preferences (language and units) as described in *SETTING LANGUAGE AND UNITS OF MEASUREMENT*

### Vehicle Mileage Transfer

1. In BUDS2, go to:
   – SETTINGS page
   – CLUSTER button
   – SETTINGS tab.
2. Select Increase Odometer Mileage.
3. Click on the upper right arrow in the green circle.
4. Read carefully the on-screen instructions before clicking in the value box.
5. Enter the new mileage if it is different from the indicated one.
6. Press SET button.
7. Press the WRITE TOTAL button.
8. Select OK to confirm the mileage.
9. Close the window.

### Setting Language and Units of Measurement

1. Connect the vehicle to the BRP diagnostic software (BUDS2), refer to the *COMMUNICATION TOOLS* subsection.
2. In BUDS2, go to:
   – SETTINGS page
   – CLUSTER button
   – SETTINGS tab
   – CONFIGURE LANGUAGE AND UNITS.

# GAUGE 7.2" DIGITAL DISPLAY

## SERVICE TOOLS


| Description | Part Number | Page |
|---|---|---|
| FLUKE 115 MULTIMETER | 529 035 868 | 319 |


## GENERAL

Most of the electrical tests require the following tool.

| REQUIRED TOOL | |
|---|---|
| FLUKE 115 MULTIMETER (P/N 529 035 868) |  |

Refer to *WIRING DIAGRAM INFORMATION* subsection for diagnostic tips on troubleshooting electrical problems.

**NOTICE** It is recommended to always disconnect the battery when replacing any electrical component. Always disconnect battery as specified, BLACK (-) cable first.

## INDICATOR LAMPS DESCRIPTION

Important information about vehicle condition is displayed on the multifunction gauge. When starting the engine, always look at the gauge for any indicator lamps or special messages.

Important information messages can also be displayed temporarily in the lower display to assist indicator lamps.



619900975-501

NOTE: Depending on the vehicle, not all the indicator lamps and messages will be applicable.

| INDICATOR LAMPS (MALFUNCTIONS) | | | |
|---|---|---|---|
| INDICATOR LAMP(S) | DIGITAL WARNING | CAUSE | WHAT TO DO |
| None | BAD KEY | Wrong or defective key | - Use the right key for the vehicle.<br>- Program a new key if the previous key is defective.<br>- Check wiring and connectors. Refer to the *WIRING DIAGRAM*. |
| None | BELT OVERLOAD | Belt reached its limit | - Stop vehicle.<br>- Inspect drive belt. Replace as required. |
|  <br>ON | HIGH ENGINE TEMPERATURE | Engine is overheating | - Stop and wait for engine to cool off.<br>- Check for leaks.<br>- Check and adjust the coolant level. |

| INDICATOR LAMPS (MALFUNCTIONS) | | | |
|---|---|---|---|
| INDICATOR LAMP(S) | DIGITAL WARNING | CAUSE | WHAT TO DO |
|  ON | LO BATT VOLT or HI BATT VOLT | Low or high battery voltage | - Recharge battery.<br>- Check battery connections.<br>- Check the charging system. |
|  ON | BRAKE | Throttle lever is applied when park brake is on | - Disengage park brake. |
|  ON | CHECK ENGINE | Engine management component malfunction | - Stop the engine. The cluster must be completely shut down. |
|  FLASHING | LIMP HOME MODE | Important engine management component | - Connect the vehicle to the BRP diagnostic software (BUDS2). Check faults codes and perform recommended actions. |
|  ON | STOP ENGINE (ACE engines) | Low oil pressure | - Check for oil leaks.<br>- Check and adjust the engine . |
| | LOW OIL (E-TEC engines) | Low oil tank level | |
|  ON | Variable messages - The message changes in accordance with the defective component. | | |

# TROUBLESHOOTING

## DIAGNOSTIC TIPS

**IMPORTANT:** When solving an electrical problem, the first thing to do is to check the battery condition as well as its cables and connections.

Make sure the battery is fully charged or install a power pack for any tests that involves a prolonged "key ON" period. If battery voltage gets too low, not only test results can be altered, but the vehicle electrical system may not operate normally.

Pay attention to ground wires. They could become loose or corroded which causes them to act as an additional load in a circuit, dropping voltage and reducing current to components. Some components may be grounded through their outer casing and mounted hardware. This should also be considered.

### Electrical Connectors

Pay particular attention to ensure that pins are not out of their connectors, loose, or damaged. The troubleshooting procedures may not cover problems resulting from one of these causes.

**NOTICE** Ensure all terminals are properly crimped on wires and connector housings are properly fastened. When replacing any electric or electronic part(s), always check electrical connections. Make sure that they are clean, corrosion-free, tight and make good contact. The voltage and current might be too weak to go through dirty or corroded connector pins or terminals.

## MULTIFUNCTION GAUGE TROUBLESHOOTING

### GAUGE FUNCTIONS INOPERATIVE OR WORKING INTERMITTENTLY

1. Power supply or ground problem
   - *Check power supply and ground circuits.*

# PROCEDURES

## MULTIFUNCTION GAUGE



619900975-500

### Testing the Multifunction Gauge

Before beginning any troubleshooting, test or repair, always check for fault codes.

1. Check for fault codes using BUDS2.
2. Record all fault codes, then erase them.
3. Perform a complete shutdown of the electrical system and reactivate it.
4. Check fault codes. If a previous fault codes reappears, perform the required service actions.

#### Testing the Multifunction Gauge Using BRP Diagnostic Software (BUDS2)

Connect the vehicle to the BRP diagnostic software (BUDS2).

In BUDS2, go to:

– **Functions** page
– **Cluster** button
– **Routines - Execute Cluster WOW test**.

All indications will come and stay ON so that you can verify each indication.

NOTE: The **WOW Test** only tests the gauge **LEDs** and **LCD**. It does not test the actual circuit functions related to each indication.

#### Testing the Multifunction Gauge Power Input

If the multifunction gauge is inoperative, first check for fault codes with BRP Diagnostic Software, record all faults then erase them. Reactivate the electrical system and recheck for faults. If any fault code appears, perform service actions required. Refer to *COMMUNICATION TOOLS* subsection.

1. Remove multifunction gauge.
2. Perform the test at multifunction gauge connector as per following illustration and tables.

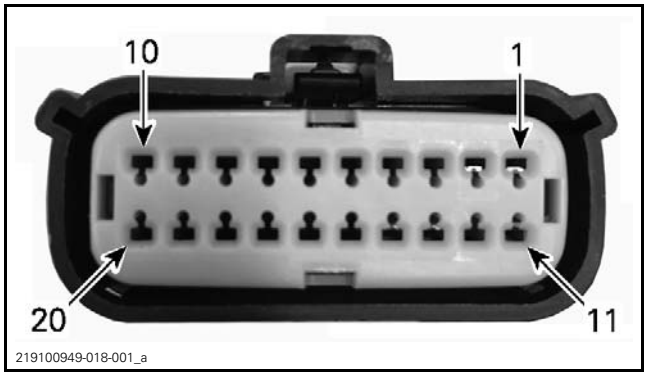

219100949-018-001_a

*MULTIFUNCTION GAUGE CONNECTOR (PIN-OUT)*

| MULTIFUNCTION GAUGE POWER TEST | | | |
|---|---|---|---|
| CL_A CONNECTOR | BATTERY | IGNITION POSITION | RESULTS |
| Multifunction connector pin 1 | Negative (-) post | Any | Close to battery voltage |
| Multifunction connector pin 11 | | ON | Close to battery voltage |

If there is no power at pin 1, check fuse F4 and the related circuit.

If there is no power at pin 11, in check fuse F2 and the related circuit.

If the power test is within specification, continue with *TESTING THE MULTIFUNCTION GAUGE GROUND CIRCUIT*.

#### Testing the Multifunction Gauge Ground Circuit

Test as per the following table.

| MULTIFUNCTION GAUGE GROUND TEST | | |
|---|---|---|
| CL CONNECTOR | BATTERY | RESULT |
| Pin 2 | Negative (-) post | Close to 1 Ω |

If the ground at pin 2 is not within specification, check the related circuit.

If the ground tested to specification, continue with *TESTING THE MULTIFUNCTION GAUGE CAN WIRE CIRCUIT*.

#### Testing the Multifunction Gauge CAN Circuit

1. Remove the seats for access to the DLC (Diagnostic Link Connector). Refer to *BODY* subsection.
2. Test as per the following table.

| MULTIFUNCTION GAUGE CAN WIRE TEST | | |
|---|---|---|
| CL CONNECTOR | DLC | RESULTS |
| Pin 13 (CAN HI) | Pin 1 | Close to 0.4 Ω |
| Pin 14 (CAN LO) | Pin 2 | Close to 0.4 Ω |

If the CAN wire verification test fails, check the related circuit.

If the multifunction gauge functions, however there is a suspected communication problem with another component, perform this test between the multifunction gauge and that component.

If the multifunction gauge power, ground and CAN verification tests are all to specifications and the multifunction gauge is inoperative, replace the multifunction gauge.

## Removing the Multifunction Gauge

Remove gauge support. Refer to procedure in *BODY* subsection

Disconnect the gauge connector. Remove following fasteners.

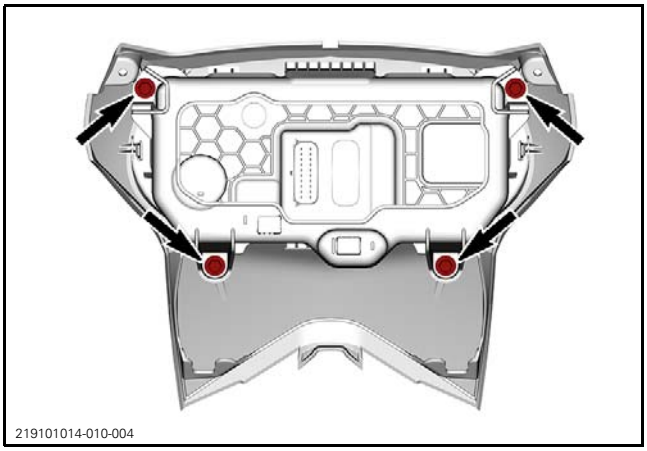


*TYPICAL*

## Installing the Multifunction Gauge

The installation is the reverse of the removal procedure. However, pay attention to the following.

| TIGHTENING TORQUE | |
|---|---|
| Multifunction gauge retaining screws | 1 N•m ± 0.2 N•m (9 lbf•**in** ± 2 lbf•**in**) |

If the multifunction gauge was replaced, connect the vehicle to the BRP diagnostic software (BUDS2) and apply any available updates.

When updates are completed, perform the following:

– Transfer the vehicle mileage as described in *VEHICLE MILEAGE TRANSFER*.
– Change settings as per customer preferences (language and units) as described in *SETTING LANGUAGE AND UNITS OF MEASUREMENT*

### Vehicle Mileage Transfer

1. In BUDS2, go to:
   – SETTINGS page
   – CLUSTER button
   – SETTINGS tab.
2. Select Increase Odometer Mileage.
3. Click on the upper right arrow in the green circle.
4. Read carefully the on-screen instructions before clicking in the value box.
5. Enter the new mileage if it is different from the indicated one.
6. Press SET button.
7. Press the WRITE TOTAL button.
8. Select OK to confirm the mileage.
9. Close the window.

### Setting Language and Units of Measurement

1. In BUDS2, go to:
   – SETTINGS page
   – CLUSTER button
   – SETTINGS tab
   – CONFIGURE LANGUAGE AND UNITS.

# ACCESSORIES (EFI AND ACE)

## GENERAL

On multifunction analog/digital gauge, heated grips and heated throttle lever output are OFF when idling.

NOTE: It is a good practice to check for fault codes using BUDS2 software as a first troubleshooting step. Refer to *DIAGNOSTIC AND FAULT CODES* subsection.

**⚠ WARNING**

**Torque wrench tightening specifications must be strictly adhered to. Locking devices must be replaced with new ones when removed (e.g.: locking tabs, elastic stop nuts, self-locking fasteners, cotter pins, etc.).**

## SYSTEM TESTING

Connect vehicle to BUDS2 in order to provide electrical power to the vehicle. Refer to *COMMUNICATION TOOL AND B.U.D.S.*

## SYSTEM DESCRIPTION (HEATED THROTTLE LEVER)

Power to the heated throttle lever is controlled through the gauge.

A three position switch allows the selection various heat levels, which are displayed in the gauge.

The switch selection sends a signal to the gauge to increase or decrease heat.

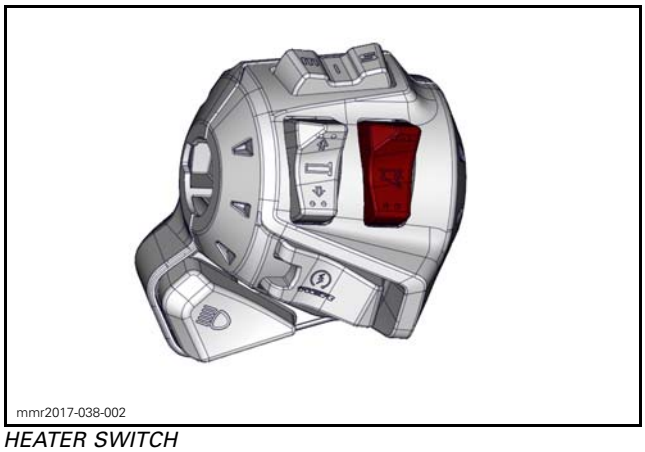


*HEATER SWITCH*

The gauge then applies the appropriate amount of current to the heater according to the selection.

To turn OFF the heaters, select heat down until there is no more indication on the bar graph.

When released, the 3 position switch springs back to the center neutral position.

## SYSTEM DESCRIPTION (HEATED HANDLEBAR GRIPS)

The grip heat is controlled through the gauge.

A three position switch allows the selection of various heat levels, which are displayed in the gauge.

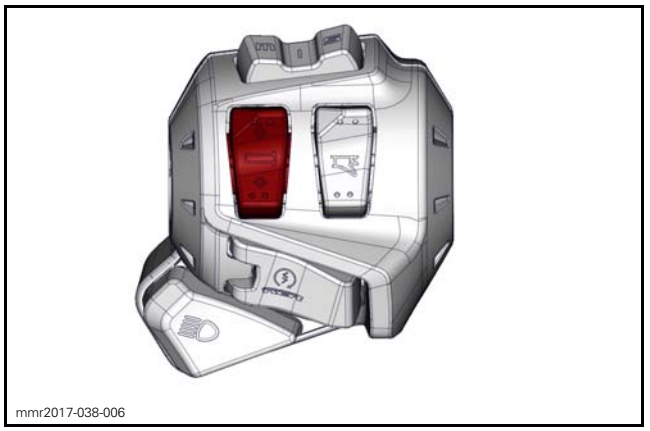


*HEATER SWITCH - MODELS WITH MULTIFUNCTION SWITCH*

NOTE: The heating intensity is displayed via the gauge with the activation of the heated grips switch.

The gauge then applies the appropriate amount of current to the heater according to the selection.

To turn OFF the heaters, select heat down until there is no more indication on the bar graph.

When released, the switch springs back to the center neutral position.

# PROCEDURES

## HEATED THROTTLE LEVER

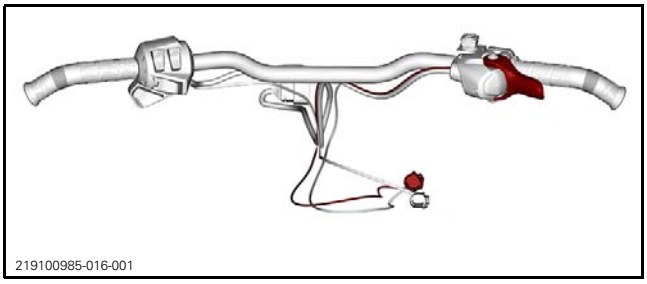


### Testing Heated Throttle Lever Switch with BUDS2

Heating elements are permanently connected to ground. Positive voltages are supplied by gauges.

1. Provide electrical power to the gauge for testing.
2. Using BUDS2, select the **Measurements** page.
3. Alternately increase or decrease heat using heated throttle lever switch.
4. Look for the applicable value to change to confirm the gauge receives the signal.

If test is good, refer to *TESTING GAUGE HEATED THROTTLE LEVER POWER OUTPUT* in this subsection.

If test failed, refer to *TESTING THROTTLE LEVER HEAT SWITCH* in this subsection.

### Testing Gauge Heated Throttle Lever Power Output

1. Provide electrical power to the gauge for testing.
2. Using BUDS2, select the **Functions** page..
3. In BUDS2, turn on the heated throttle grip.
4. Touch throttle lever to confirm it heats up.
5. Backprobe gauge **no. MG** connector as per following table.

| MODELS WITH ANALOG/DIGITAL GAUGE | |
|---|---|
| TERMINAL | SPECIFICATION |
| MG-4 | 12 Vdc |

6. If test is good, the gauge output to throttle lever heater is good. Proceed with *TESTING THROTTLE LEVER HEATING ELEMENT* in this subsection.
7. If the test failed, replace the gauge.

### Testing Throttle Lever Heating Element

Refer to *WIRING HARNESS AND CONNECTORS* subsection for connector location.

| STR 6P CONNECTOR | | RESISTANCE @ 20°C (68°F) |
|---|---|---|
| STR 6P-5 | STR 6P-2 | 1.73 - 4.22 Ω |

1. If readings are out of specifications, replace throttle lever.
2. If heating element readings are within specifications, check wiring and connections to gauge.
3. Reconnect connectors.

## HEATED HANDLEBAR GRIPS

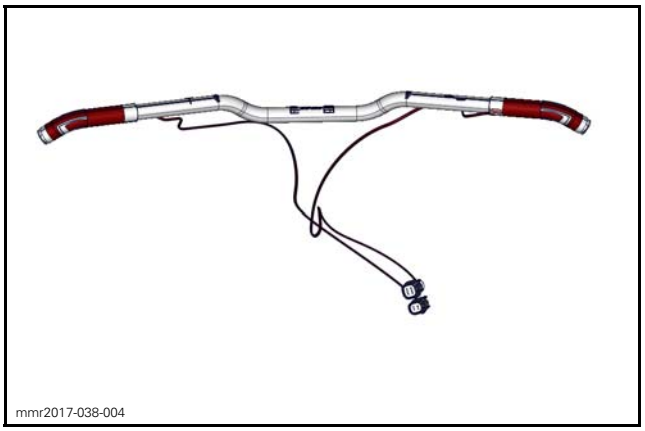


### Testing Handlebar Heated Grip Switch with BUDS2

Heating elements are permanently connected to ground. Positive voltages are supplied by gauges.

1. Provide electrical power to the gauge for testing.
2. Using the BUDS2, navigate to the **Measurements** page.
3. Press on the vehicle handle grip heat switch to alternately increase or decrease heat.
4. In BUDS2, look for the applicable to change.

If test is good, proceed with *TESTING GAUGE HEATER GRIPS POWER OUTPUT WITH BUDS2* in this subsection.

If test failed, proceed with *TESTING HANDLEBAR GRIP HEAT SWITCH* in this subsection.

### Testing Gauge Heater Grips Power Output with BUDS2

1. Provide electrical power to the gauge for testing.

2. Using the BUDS2, navigate to the **Functions** page.
3. In BUDS2, turn the heated grips on.

| MODELS WITH ANALOG/DIGITAL GAUGE | |
|---|---|
| TERMINAL | SPECIFICATION |
| MG-5 | 12 Vdc |

4. If test is good, the gauge heater to handlebar grip heater is good. Proceed with *TESTING HANDLEBAR GRIP HEATING ELEMENT* in this subsection.
5. If the test failed, replace the gauge.

## Testing Handlebar Grip Heating Element

If you cannot feel the temperature increase of a hand grip heating element, carry out the following steps.

1. Disconnect heated grip connector.
2. Test heating elements on either side as per following specifications.

Refer to *WIRING HARNESS AND CONNECTORS* subsection for connector location.

| RIGHT HEATED GRIP | | RESISTANCE @ 20°C (68°F) |
|---|---|---|
| STR 6P-4 | STR 6P-1 | 5.3 - 6.6 Ω |

| LEFT HEATED GRIP | | RESISTANCE @ 20°C (68°F) |
|---|---|---|
| STR 4P-3 | STR 4P-1 | 5.3 - 6.6 Ω |

3. If readings are out of specifications, replace applicable handle grip heating element.
4. If heating element readings are within specifications, check wiring and connections.
5. Reconnect connectors.

## Removing Heater Element

**NOTICE** **Heater wire routing may vary significantly due to different type handlebars and vehicles. Its highly important to take note of exact positioning of grip heaters, locking ties, and wire routing before removing them from the handlebars. Failure to properly route wires may lead to equipment damage or failure.**

1. Disconnect the connector, Refer to *WIRING DIAGRAM AND CONNECTORS* subsection for connector location.
   1.1 STR 4P for left hand handlebar heater
   1.2 STR 6P for right hand handlebar heater

Use procedures for *MOLEX* connectors in the *WIRING DIAGRAM AND CONNECTORS* subsection.

2. Cut locking ties securing heater wires to handlebars.
3. Pull wires from harness protective sheath, multifunction switch housing or throttle lever housing.
4. Cut and remove black electrical tape from heater element and remove heater from cork insulator.
5. If damaged, remove cork insulator from handlebar and clean all adhesive residue from the handlebar.

## Installing Heated Grips Heater Element

1. Measure 159 mm (6.25 in) from the end of the handlebar, and across the top of the bend in the bar. Trace a reference line with a marker at that point on the handlebar.

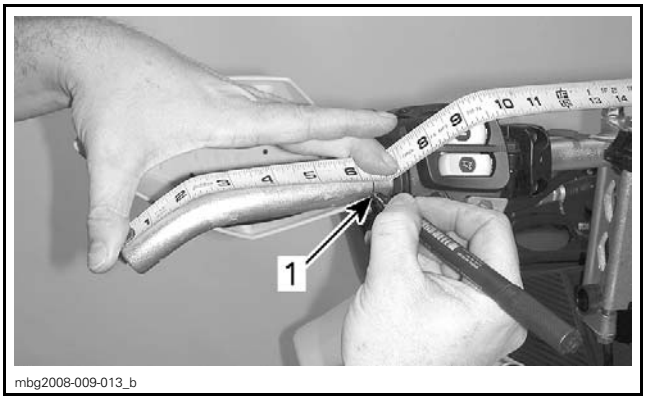


*TYPICAL — MEASURING FOR HEATER POSITION*
*1. Trace reference line*

2. Align the edge of the cork insulator with the reference line centered with the handlebar folding axis as illustrated.

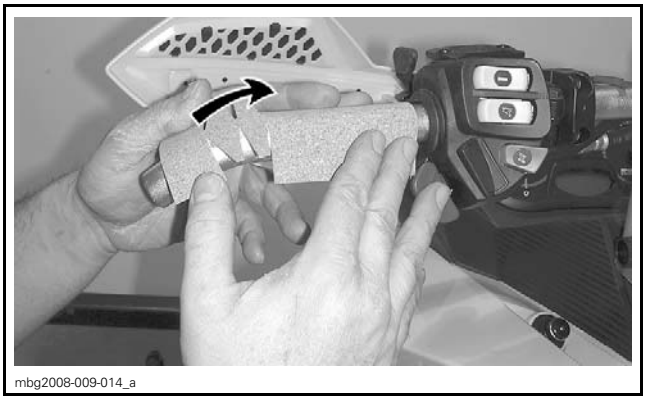


*TYPICAL — CORK INSULATOR ALIGNMENT*

3. Apply firm pressure to cork insulator to assure proper adherence to handlebar.
4. Align the film heater element with the cork insulator and center of handlebar folding axis as illustrated.

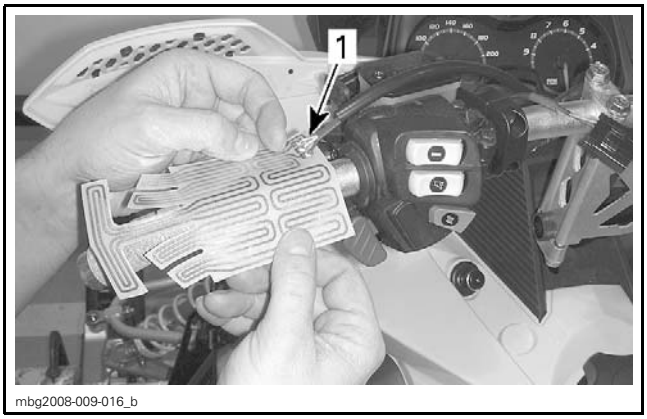


*TYPICAL — HEATER ALIGNMENT*
*1. Heater wire position (LH front, RH rear)*

5. Apply firm pressure to heater to assure proper adherence to cork insulator.

NOTE: The same heater element is used for both the LH and RH sides. Therefore, the electrical wiring will be in front of the handlebar on the LH side, and behind the handlebar (towards driver) on the RH side.

6. Apply two turns of black electrical tape at each of the four locations illustrated so that it covers the edges of the heater element and prevents snagging and damage to the element during rubber grip installation.

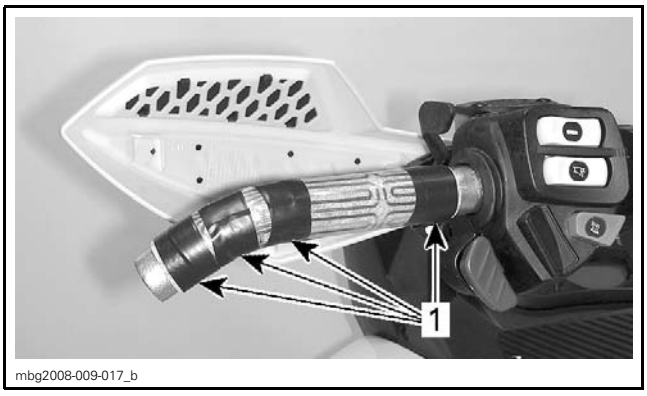


*TYPICAL*
*1. Electrical tape application (4x)*

NOTE: It is highly important to apply tape so that it fully secures the electrical wire connections. This will ease installation of the rubber hand grip and prevent undue stress to the connections.

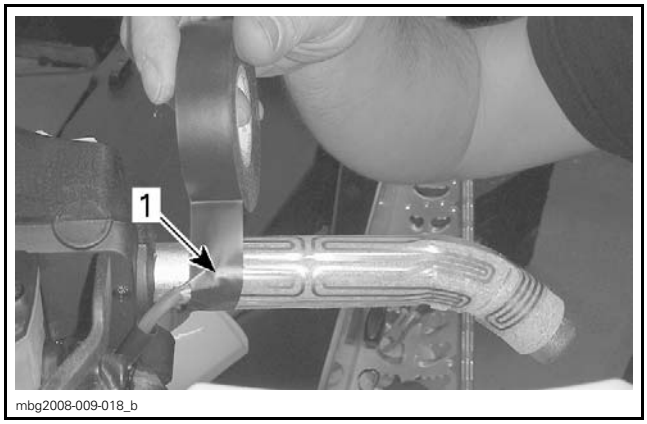


*TYPICAL — IMPORTANT*
*1. Tape application over wire connections*

7. Install rubber hand grip, refer to *STEERING SYSTEM* subsection for detail.
8. Route wiring as noted during the removal procedure.
9. Insert wire in housing, refer to *WIRING DIAGRAM* for wire color and pin number locations.

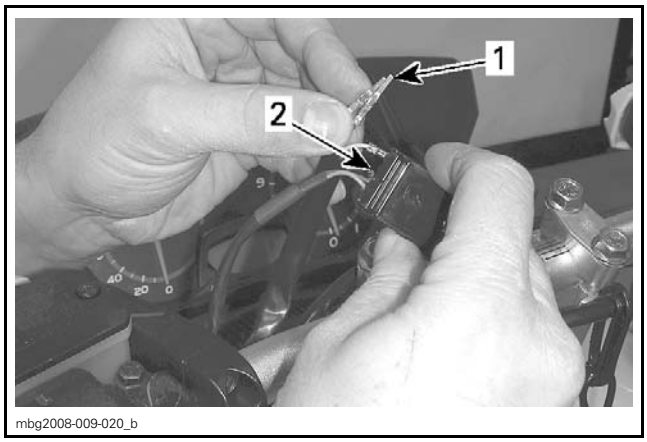


*TYPICAL*
*1. Heater wire terminals*
*2. Insertion through back of connector*

10. Install locking ties to secure the heater wire as it was routed originally.

**⚠ WARNING**

**To ensure RH heater wires does not prevent smooth operation of throttle lever, it must be passed straight through the emergency engine cut-off switch housing and routed in the corrugated sheave.**

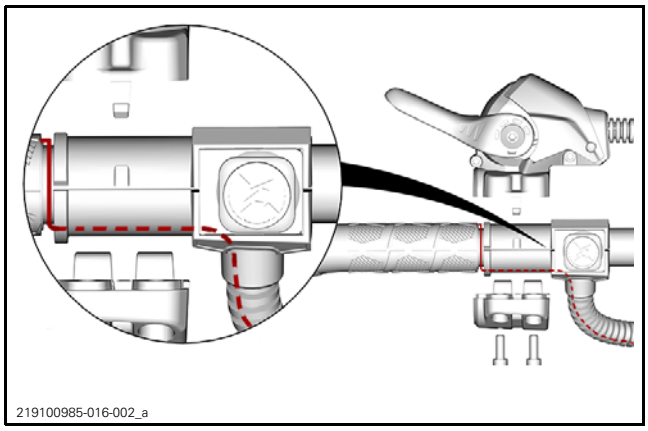


**NOTICE** **Ensure LH heater wires are properly routed through multifunction switch housing to prevent them from being pinched when installing housing cover. Pinched or damaged wires may result in a short circuit.**

11. Provide electrical power to the heaters for testing.
12. Using the hand grip heat switch, turn on the hand grip heaters and ensure they are functioning correctly.

## TESTING THROTTLE LEVER HEAT SWITCH

NOTE: On models with the compact digital gauge, there is only one switch that controls both the heated grips and heated throttle lever.

1. Using a multimeter, select the Ω position.
2. Test throttle lever heat switch and circuits as per table.

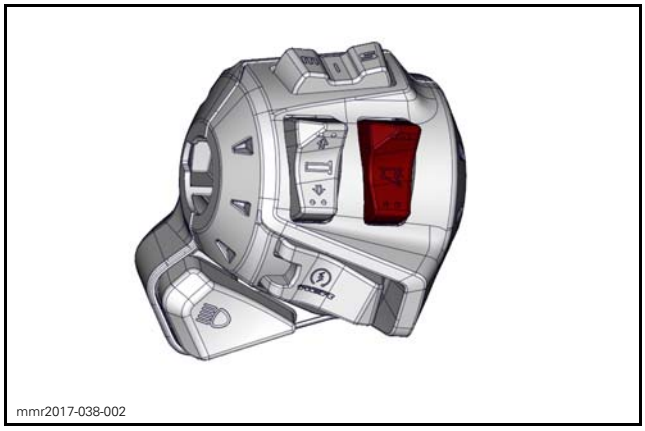


| THROTTLE LEVER HEAT SWITCH TEST | | | |
|---|---|---|---|
| SWITCH SELECTION | TERMINAL | | RESISTANCE |
| UP | SH-1 | SH-9 | Close to 0 Ω |
| | SH-1 | SH-3 | Infinite (OL) |
| DOWN | SH-1 | SH-9 | Infinite (OL) |
| | SH-1 | SH-3 | Close to 0 Ω |

If continuity test is as per specification, check wiring to gauge connector.

If continuity test is out of specification, check switch circuit as per wiring diagram. If good, replace switch.

## TESTING HANDLEBAR HEATED GRIP SWITCH

NOTE: On models with the compact digital gauge, there is only one switch that controls both the heated grips and heated throttle lever.

1. Test throttle lever heat switch and circuits as per table.

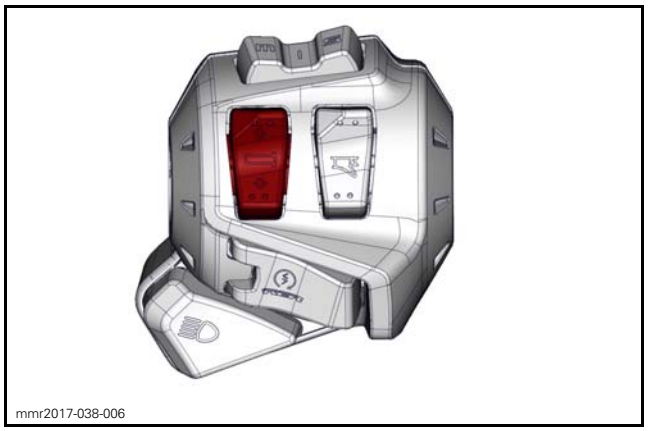


| HEATED GRIP HEAT SWITCH TEST | | | |
|---|---|---|---|
| SWITCH SELECTION | TERMINAL | | RESISTANCE |
| UP | SH-1 | SH-10 | Close to 0 Ω |
| | SH-1 | SH-4 | Infinite (OL) |
| DOWN | SH-1 | SH-10 | Infinite (OL) |
| | SH-1 | SH-4 | Close to 0 Ω |

If continuity test is as per specification, check wiring to gauge connector.

If continuity test is out of specification, check switch circuit as per wiring diagram. If good, replace switch.

# HEATED SEATS AND PASSENGER HEATED GRIPS

## Testing Heated Seats

Unplug connector and measure resistance as per following table.

*Single Seat*

| HEATED SEAT CONNECTOR - PROBE | | RESISTANCE (APPROXIMATELY) @ 20°C (68°F) |
|---|---|---|
| YE wire | BK wire | 32 Ω |
| RD wire | | 17.5 Ω |

*Double Seat*

| HEATED SEAT CONNECTOR - PROBE | | RESISTANCE (APPROXIMATELY) @ 20°C (68°F) |
|---|---|---|
| YE wire | BK wire | 11 Ω |
| RD wire | | 11 Ω |

If resistance is not as specified, replace heated seat.

If resistance is as specified, continue testing.

Start and idle engine.

NOTE: On some models, you may need to increase RPM to above 2000 RPM in order to power this secondary 12v circuit.

Measure voltage at the heated seat connector as indicated in following table.

| HEATED SEAT SWITCH POSITION | HEATED SEAT CONNECTOR - PROBE | | VOLTAGE (APPROXIMATELY) |
|---|---|---|---|
| High (single seat) Front + rear (double seat) | YE wire | BK wire | 12Vdc |
| | RD wire | | |
| Low (single seat) Rear only (double seat) | YE wire | | 12Vdc |
| | RD wire | | 0Vdc |

If voltage is not as indicated, test switch and/or wires from element to switch. Refer to *WIRING DIAGRAM*.

## Testing Passenger Heated Grips (Left or Right)

Unplug connector and measure resistance as per following table.

| PROBE | | RESISTANCE (APPROXIMATELY) @ 20°C (68°F) |
|---|---|---|
| OG wire | BK wire | 9.5 Ω |
| OG/VT wire | BK wire | 19 Ω |

If resistance is not as specified, replace heated grip.

If resistance is as specified, continue testing.

Start and idle engine.

NOTE: On some models, you may need to increase RPM to above 2000 RPM in order to power this secondary 12v circuit.

Measure voltage at the heated grip connector as indicated in following table.

| HEATED GRIP SWITCH POSITION | PROBE | | VOLTAGE (APPROXIMATELY) |
|---|---|---|---|
| High | OG wire | BK wire | 12Vdc |
| | OG/VT wire | | 0Vdc |
| Low | OG wire | | 0Vdc |
| | OG/VT wire | | 12Vdc |

If voltage is not as indicated, test switch and/or wires from element to switch. Refer to *WIRING DIAGRAM*.

## Testing Heated Seat and Grip Switches

Measure switch resistance as per following table.

| SWITCH POSITION | PROBE | | RESISTANCE |
|---|---|---|---|
| High | Pin 6 | Pin 8 | Close to 0 Ω |
| Off | Pin 6 | Pin 8 | O.L. |
| | | Pin 5 | O.L. |
| Low | Pin 6 | Pin 5 | Close to 0 Ω |

If resistance is not as specified, replace switch.

If resistance is as specified, continue testing.

Start and idle engine.

NOTE: On some models, you may need to increase RPM to above 2000 RPM in order to power this secondary 12v circuit.

Measure voltage at the switch connector as indicated in following table.

| SWITCH POSITION | PROBE | | VOLTAGE (APPROXIMATELY) |
|---|---|---|---|
| Any | Pin 6 | Chassis ground | 12Vdc |

If voltage is not as indicated, test power distribution circuit to switch. Refer to *WIRING DIAGRAM*.

# ACCESSORIES (E-TEC)

## SERVICE TOOLS


| Description | Part Number | Page |
|---|---|---|
| 12 V BATTERY SUPPLY CABLE | 529 035 997 | 331 |
| FLUKE 115 MULTIMETER | 529 035 868 | 336 |
| POWER INTERFACE | 515 177 223 | 331 |


## GENERAL

On multifunction analog/digital gauge, heated grips and heated throttle lever are limited at 50% output when idling.

NOTE: It is a good practice to check for fault codes using BUDS2 software as a first troubleshooting step. Refer to *DIAGNOSTIC AND FAULT CODES* subsection.

**⚠ WARNING**

**Torque wrench tightening specifications must be strictly adhered to. Locking devices must be replaced with new ones when removed (e.g.: locking tabs, elastic stop nuts, self-locking fasteners, cotter pins, etc.).**

## SYSTEM TESTING

For models without a battery, connect the following tools in order to provide electrical power to the vehicle.

| REQUIRED TOOLS |
|---|
| – POWER INTERFACE (P/N 515 177 223)<br>– 12 V BATTERY SUPPLY CABLE (P/N 529 035 997)<br>– 12-volt battery |

## SYSTEM DESCRIPTION (HEATED THROTTLE LEVER)



Power to the heated throttle lever is controlled through the gauge.

A three position switch allows the selection various heat levels, which are displayed in the gauge.

NOTE: The heated handlebar grips and the heated throttle lever are controlled by the same 3 position switch when used with the console switch. Refer to *SETTING THE HEATED THROTTLE LEVER RATIO*.

NOTE: The heating intensity is displayed via the gauge with the activation of the heated throttle lever switch.

The switch selection sends a signal to the gauge to increase or decrease heat.

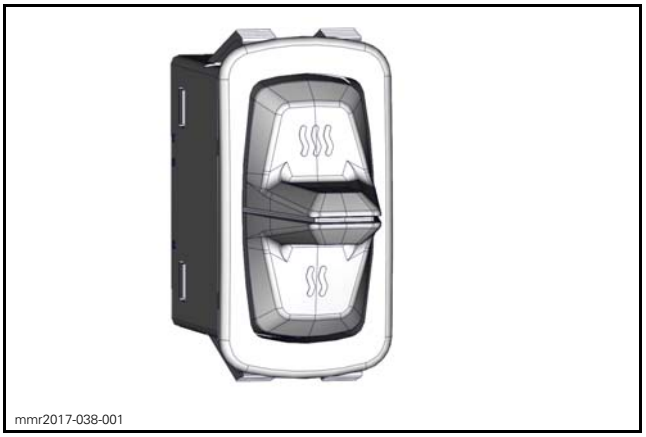


*HEATER SWITCH - MODELS WITH CONSOLE SWITCH*

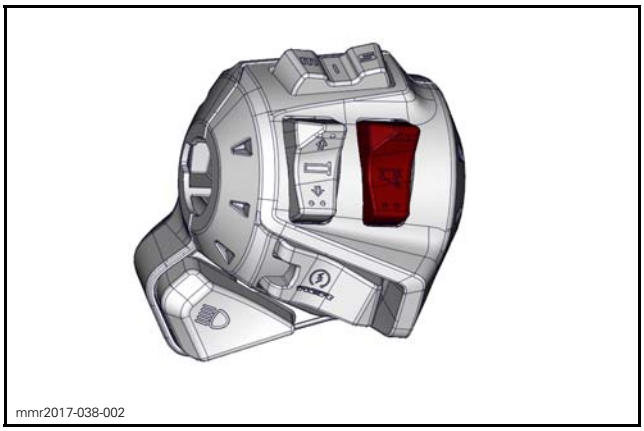


*HEATER SWITCH - MODELS WITH MULTIFUNCTION SWITCH*

The gauge then applies the appropriate amount of current to the heater according to the selection.

To turn OFF the heaters, select heat down until there is no more indication on the bar graph.

When released, the 3 position switch springs back to the center neutral position.

## SYSTEM DESCRIPTION (HEATED HANDLEBAR GRIPS)

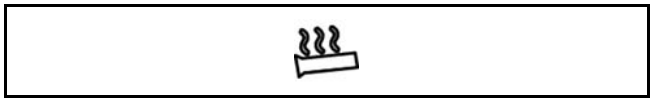

The grip heat is controlled through the gauge.

A three position switch allows the selection of various heat levels, which are displayed in the gauge.

NOTE: The heated handlebar grips and the heated throttle lever are controlled by the same 3 position switch when used with the console switch. Refer to *SETTING THE HEATED THROTTLE LEVER RATIO*.

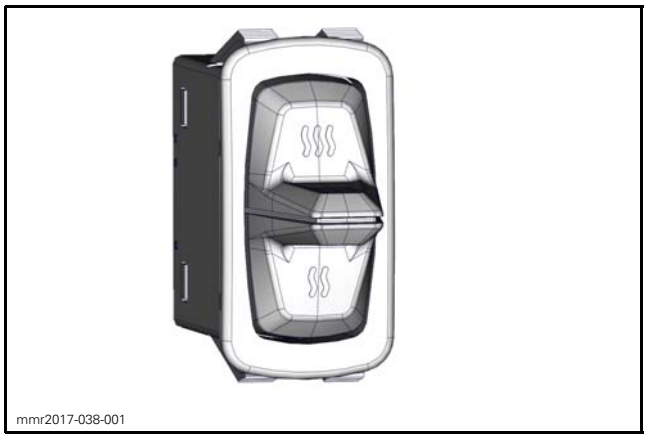


*HEATER SWITCH - MODELS WITH CONSOLE SWITCHES*

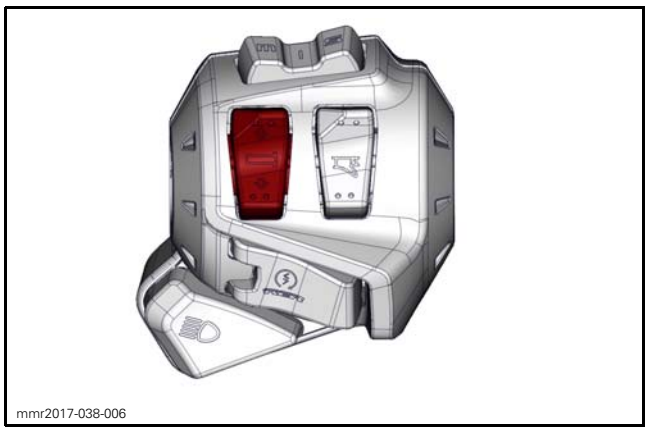


*HEATER SWITCH - MODELS WITH MULTIFUNCTION SWITCH*

NOTE: The heating intensity is displayed via the gauge with the activation of the heated grips switch.

The gauge then applies the appropriate amount of current to the heater according to the selection.

To turn OFF the heaters, select heat down until there is no more indication on the bar graph.

When released, the switch springs back to the center neutral position.

## SETTING THE HEATED THROTTLE LEVER RATIO

On models where one switch simultaneously controls the heated grip temperature and the throttle lever, use BUDS2 to set the heated throttle grip ratio.

A higher ratio will increase the heated throttle temperature compared to the heated grips.

A lower ratio will lower the heated throttle temperature compared to the heated grips.

1. Connect BUDS2. Refer to *COMMUNICATION TOOLS AND BUDS* subsection.
2. Navigate to the settings page.
3. Change the **Heated Throttle Lever Ratio**.
4. Write the changes to the cluster.

# PROCEDURES

## HEATED THROTTLE LEVER

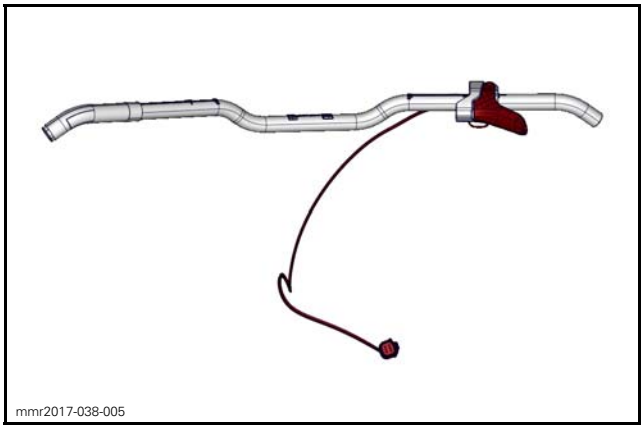


On multifunction analog/digital gauge heaters are limited to 50% under 2000 RPM.

For troubleshooting:

– Start engine and rev above 800 RPM for at least 2 seconds
– Use BUDS2 to activate the applicable heater.

NOTE: On models with console switches, there is only one switch that controls both the heated grips and heated throttle lever. Refer to *SYSTEM DESCRIPTION* and *SETTING THE HEATED THROTTLE LEVER RATIO*.

### Testing Heated Throttle Lever Switch with BUDS2

Heating elements are permanently connected to ground. Positive voltages are supplied by gauges.

1. Provide electrical power to the gauge for testing.
2. Using BUDS2, select the **Measurements** page.
3. Alternately increase or decrease heat using heated throttle lever switch.
4. Look for the applicable value to change to confirm the gauge receives the signal.

If test is good, refer to *TESTING GAUGE HEATED THROTTLE LEVER POWER OUTPUT* in this subsection.

If test failed, refer to *TESTING THROTTLE LEVER HEAT SWITCH* in this subsection.

### Testing Gauge Heated Throttle Lever Power Output

1. Provide electrical power to the gauge for testing.
2. Using BUDS2, select the **Functions** page..
3. In BUDS2, turn on the heated throttle grip.
4. Touch throttle lever to confirm it heats up.
5. Backprobe gauge **no. MG** connector as per following table.

| MODELS WITH COMPACT DIGITAL GAUGE | |
|---|---|
| TERMINAL | SPECIFICATION |
| MG-7 | 2.7 to 14.5 Vdc depending on heated throttle lever ratio |

| MODELS WITH ANALOG/DIGITAL GAUGE | |
|---|---|
| TERMINAL | SPECIFICATION |
| MG-4 | 12 Vdc |

6. If test is good, the gauge output to throttle lever heater is good. Proceed with *TESTING THROTTLE LEVER HEATING ELEMENT* in this subsection.
7. If the test failed, replace the gauge.

### Testing Throttle Lever Heating Element

Refer to *WIRING HARNESS AND CONNECTORS* subsection for connector location.

| STR 6P CONNECTOR | | RESISTANCE @ 20°C (68°F) |
|---|---|---|
| STR 6P-5 | STR 6P-2 | 1.73 - 4.22 Ω |

1. If readings are out of specifications, replace throttle lever.
2. If heating element readings are within specifications, check wiring and connections to gauge.
3. Reconnect connectors.

## HEATED HANDLEBAR GRIPS

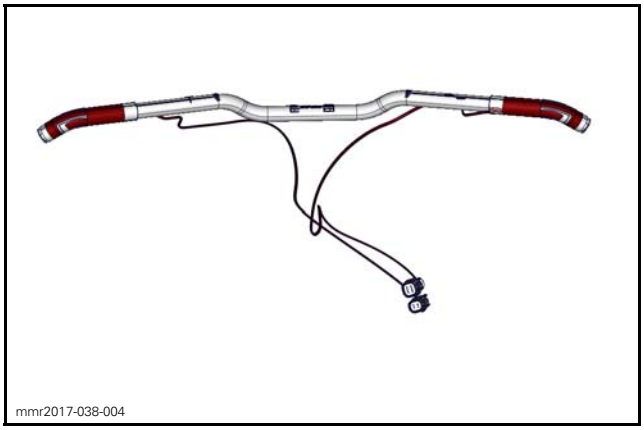


### Testing Handlebar Heated Grip Switch with BUDS2

Heating elements are permanently connected to ground. Positive voltages are supplied by gauges.

1. Provide electrical power to the gauge for testing.
2. Using the BUDS2, navigate to the **Measurements** page.
3. Press on the vehicle handle grip heat switch to alternately increase or decrease heat.
4. In BUDS2, look for the applicable to change.

If test is good, proceed with *TESTING GAUGE HEATER GRIPS POWER OUTPUT WITH BUDS2* in this subsection.

If test failed, proceed with *TESTING HANDLEBAR GRIP HEAT SWITCH* in this subsection.

### Testing Gauge Heater Grips Power Output with BUDS2

1. Provide electrical power to the gauge for testing.
2. Using the BUDS2, navigate to the **Functions** page.
3. In BUDS2, turn the heated grips on.

| MODELS WITH COMPACT DIGITAL GAUGE | |
|---|---|
| TERMINAL | SPECIFICATION |
| MG-1 | 12 Vdc |

| MODELS WITH ANALOG/DIGITAL GAUGE | |
|---|---|
| TERMINAL | SPECIFICATION |
| MG-5 | 12 Vdc |

4. If test is good, the gauge heater to handlebar grip heater is good. Proceed with *TESTING HANDLEBAR GRIP HEATING ELEMENT* in this subsection.
5. If the test failed, replace the gauge.

## Testing Handlebar Grip Heating Element

If you cannot feel the temperature increase of a hand grip heating element, carry out the following steps.

1. Disconnect heated grip connector.
2. Test heating elements on either side as per following specifications.

Refer to *WIRING HARNESS AND CONNECTORS* subsection for connector location.

| RIGHT HEATED GRIP | | RESISTANCE @ 20°C (68°F) |
|---|---|---|
| STR 6P-4 | STR 6P-1 | 5.3 - 6.6 Ω |

| LEFT HEATED GRIP | | RESISTANCE @ 20°C (68°F) |
|---|---|---|
| STR 6P-3 | STR 6P-1 | 5.3 - 6.6 Ω |

3. If readings are out of specifications, replace applicable handle grip heating element.
4. If heating element readings are within specifications, check wiring and connections.
5. Reconnect connectors.

## Removing Heater Element

**NOTICE** Heater wire routing may vary significantly due to different type handlebars and vehicles. Its highly important to take note of exact positioning of grip heaters, locking ties, and wire routing before removing them from the handlebars. Failure to properly route wires may lead to equipment damage or failure.

1. Disconnect the connector, Refer to *WIRING DIAGRAM AND CONNECTORS* subsection for connector location.
   1.1 STR 4P for left hand handlebar heater
   1.2 STR 6P for right hand handlebar heater

Use procedures for *MOLEX* connectors in the *WIRING DIAGRAM AND CONNECTORS* subsection.

2. Cut locking ties securing heater wires to handlebars.
3. Pull wires from harness protective sheath, multifunction switch housing or throttle lever housing.
4. Cut and remove black electrical tape from heater element and remove heater from cork insulator.
5. If damaged, remove cork insulator from handlebar and clean all adhesive residue from the handlebar.

## Installing Heated Grips Heater Element

1. Measure 159 mm (6.25 in) from the end of the handlebar, and across the top of the bend in the bar. Trace a reference line with a marker at that point on the handlebar.

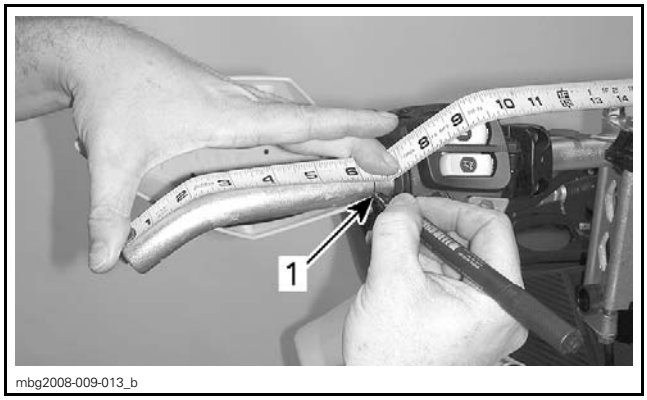


*TYPICAL — MEASURING FOR HEATER POSITION*
*1. Trace reference line*

2. Align the edge of the cork insulator with the reference line centered with the handlebar folding axis as illustrated.

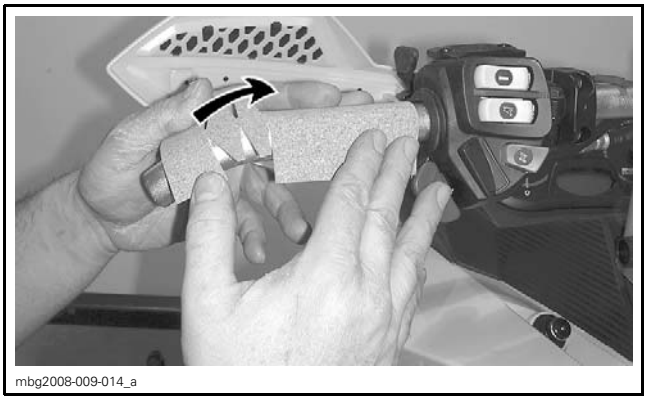


*TYPICAL — CORK INSULATOR ALIGNMENT*

3. Apply firm pressure to cork insulator to assure proper adherence to handlebar.
4. Align the film heater element with the cork insulator and center of handlebar folding axis as illustrated.

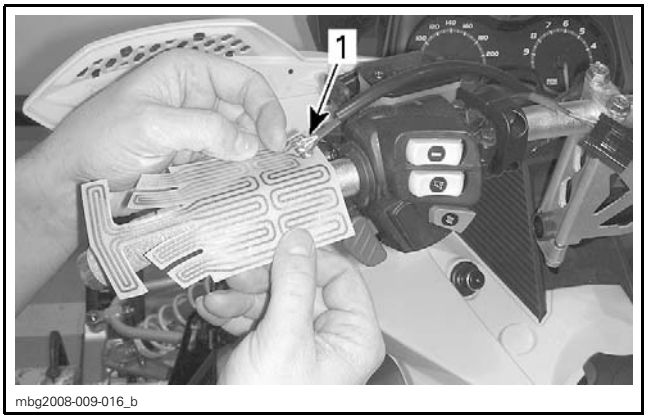


*TYPICAL — HEATER ALIGNMENT*
*1. Heater wire position (LH front, RH rear)*

5. Apply firm pressure to heater to assure proper adherence to cork insulator.

NOTE: The same heater element is used for both the LH and RH sides. Therefore, the electrical wiring will be in front of the handlebar on the LH side, and behind the handlebar (towards driver) on the RH side.

6. Apply two turns of black electrical tape at each of the four locations illustrated so that it covers the edges of the heater element and prevents snagging and damage to the element during rubber grip installation.

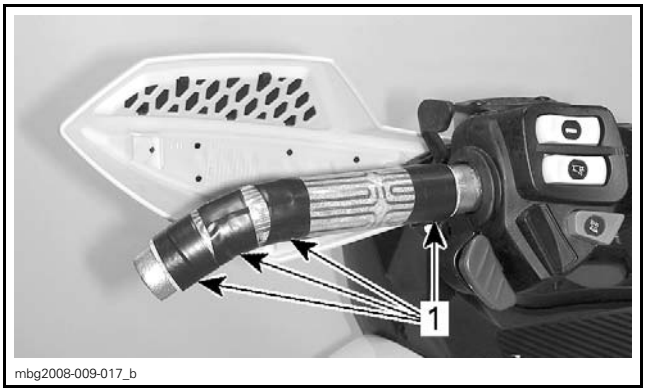


*TYPICAL*
*1. Electrical tape application (4x)*

NOTE: It is highly important to apply tape so that it fully secures the electrical wire connections. This will ease installation of the rubber hand grip and prevent undue stress to the connections.

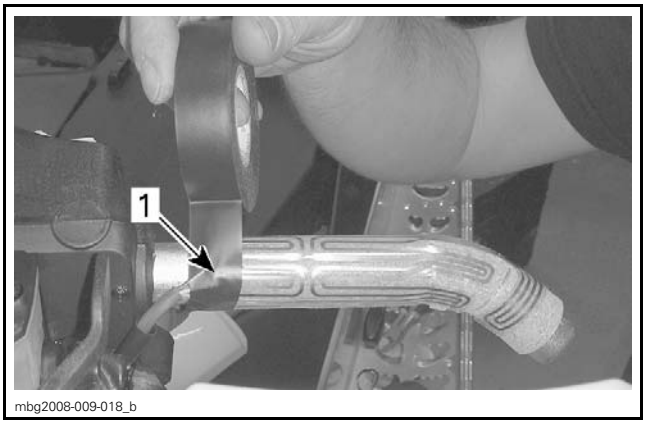


*TYPICAL — IMPORTANT*
*1. Tape application over wire connections*

7. Install rubber hand grip, refer to *STEERING SYSTEM* subsection for detail.
8. Route wiring as noted during the removal procedure.
9. Insert wire in housing, refer to *WIRING DIAGRAM* for wire color and pin number locations.

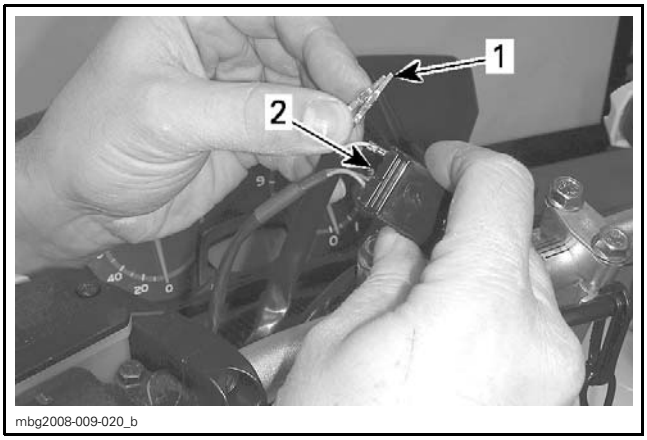


*TYPICAL*
1. *Heater wire terminals*
2. *Insertion through back of connector*

10. Install locking ties to secure the heater wire as it was routed originally..

**⚠ WARNING**

**To ensure RH heater wires does not prevent smooth operation of throttle lever, it must be passed straight through the housing without any slack, and secured with a locking tie on the emergency engine cut-off switch housing.**

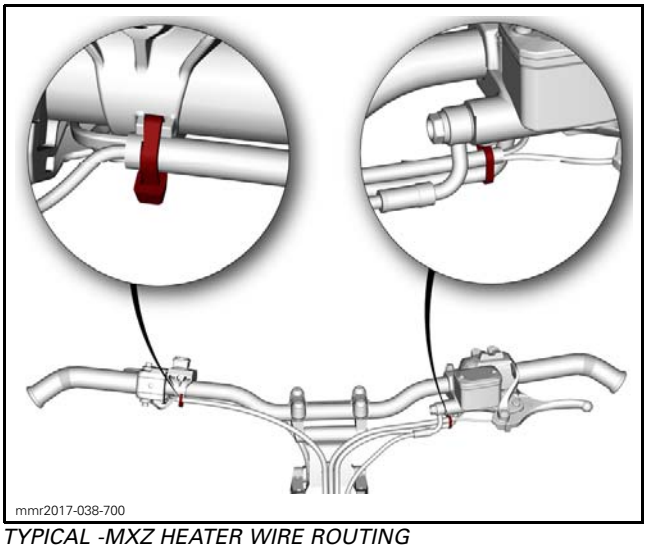


*TYPICAL -MXZ HEATER WIRE ROUTING*

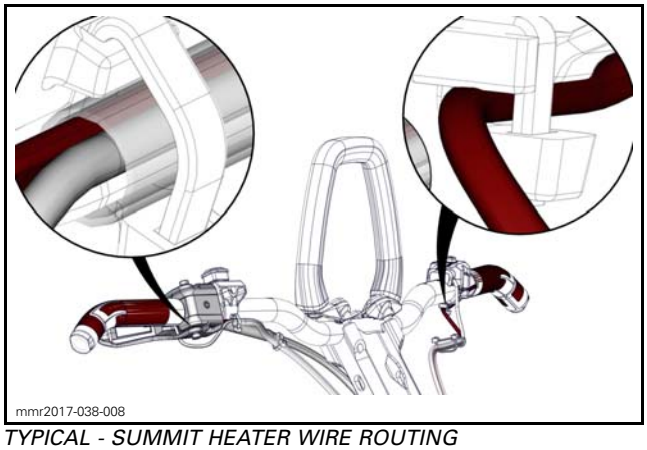


*TYPICAL - SUMMIT HEATER WIRE ROUTING*

**NOTICE** **Ensure LH heater wires are properly routed through multifunction switch housing to prevent them from being pinched when installing housing cover. Pinched or damaged wires may result in a short circuit.**

11. Provide electrical power to the heaters for testing.
12. Using the hand grip heat switch, turn on the hand grip heaters and ensure they are functioning correctly.

## TESTING THROTTLE LEVER HEAT SWITCH

NOTE: On models with the compact digital gauge, there is only one switch that controls both the heated grips and heated throttle lever.

1. Using the FLUKE 115 MULTIMETER (P/N 529 035 868), select the Ω position.
2. Test throttle lever heat switch and circuits as per table.

*Models with console switches*

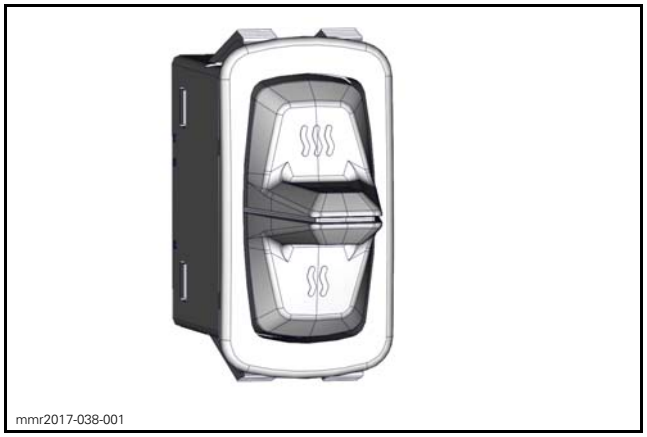

| THROTTLE LEVER HEAT SWITCH TEST | | | |
|---|---|---|---|
| SWITCH SELECTION | TERMINAL | | RESISTANCE |
| UP | GRIP-6 | GRIP-8 | Close to 0 Ω |
| | GRIP-6 | GRIP-5 | Infinite (OL) |
| DOWN | GRIP-6 | GRIP-8 | Infinite (OL) |
| | GRIP-6 | GRIP-5 | Close to 0 Ω |

*Models with multifunction switches*

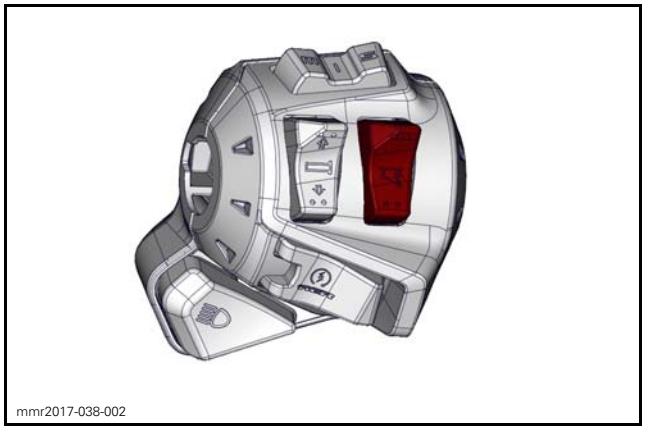
mmr2017-038-002

| THROTTLE LEVER HEAT SWITCH TEST | | | |
|---|---|---|---|
| SWITCH SELECTION | TERMINAL | | RESISTANCE |
| UP | SH-1 | SH-9 | Close to 0 Ω |
| | SH-1 | SH-3 | Infinite (OL) |
| DOWN | SH-1 | SH-9 | Infinite (OL) |
| | SH-1 | SH-3 | Close to 0 Ω |

If continuity test is as per specification, check wiring to gauge connector.

If continuity test is out of specification, check switch circuit as per wiring diagram. If good, replace switch.

## TESTING HANDLEBAR HEATED GRIP SWITCH

NOTE: On models with the compact digital gauge, there is only one switch that controls both the heated grips and heated throttle lever.

1. Test throttle lever heat switch and circuits as per table.

*Models with console switches*

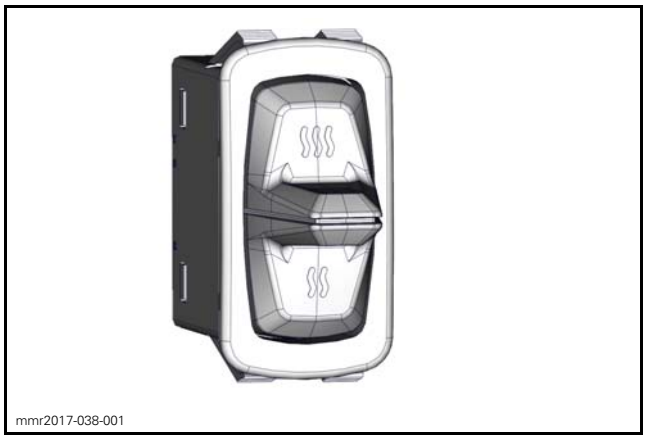
mmr2017-038-001

| HEATED GRIP HEAT SWITCH TEST | | | |
|---|---|---|---|
| SWITCH SELECTION | TERMINAL | | RESISTANCE |
| UP | GRIP-6 | GRIP-8 | Close to 0 Ω |
| | GRIP-6 | GRIP-5 | Infinite (OL) |
| DOWN | GRIP-6 | GRIP-8 | Infinite (OL) |
| | GRIP-6 | GRIP-5 | Close to 0 Ω |

*Models with multifunction switches*

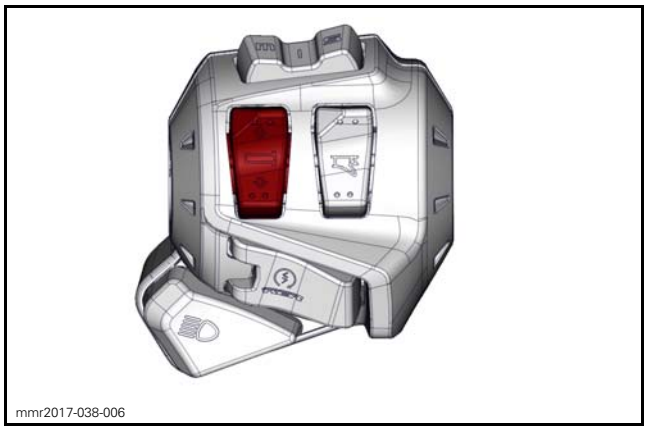
mmr2017-038-006

| HEATED GRIP HEAT SWITCH TEST | | | |
|---|---|---|---|
| SWITCH SELECTION | TERMINAL | | RESISTANCE |
| UP | SH-1 | SH-10 | Close to 0 Ω |
| | SH-1 | SH-4 | Infinite (OL) |
| DOWN | SH-1 | SH-10 | Infinite (OL) |
| | SH-1 | SH-4 | Close to 0 Ω |

If continuity test is as per specification, check wiring to gauge connector.

If continuity test is out of specification, check switch circuit as per wiring diagram. If good, replace switch.

# HEATED SEATS AND PASSENGER HEATED GRIPS

## Testing Heated Seats

Unplug connector and measure resistance as per following table.

| HEATED SEAT CONNECTOR - PROBE | | RESISTANCE (APPROXIMATELY) @ 20°C (68°F) |
|---|---|---|
| YE wire | BK wire | 32 Ω |
| RD wire | | 17.5 Ω |

If resistance is not as specified, replace heated seat.

If resistance is as specified, continue testing.

Start and idle engine.

NOTE: On some models, you may need to increase RPM to above 2000 RPM in order to power this secondary 12v circuit.

Measure voltage at the heated seat connector as indicated in following table.

| HEATED SEAT SWITCH POSITION | HEATED SEAT CONNECTOR - PROBE | | VOLTAGE (APPROXIMATELY) |
|---|---|---|---|
| High (single seat) Front + rear (double seat) | YE wire | BK wire | 12Vdc |
| | RD wire | | |
| Low (single seat) Rear only (double seat) | YE wire | | 12Vdc |
| | RD wire | | 0Vdc |

If voltage is not as indicated, test switch and/or wires from element to switch. Refer to *WIRING DIAGRAM*.

## Testing Passenger Heated Grips (Left or Right)

Unplug connector and measure resistance as per following table.

| PROBE | | RESISTANCE (APPROXIMATELY) @ 20°C (68°F) |
|---|---|---|
| OG wire | BK wire | 9.5 Ω |
| OG/VT wire | BK wire | 19 Ω |

If resistance is not as specified, replace heated grip.

If resistance is as specified, continue testing.

Start and idle engine.

NOTE: On some models, you may need to increase RPM to above 2000 RPM in order to power this secondary 12v circuit.

Measure voltage at the heated grip connector as indicated in following table.

| HEATED GRIP SWITCH POSITION | PROBE | | VOLTAGE (APPROXIMATELY) |
|---|---|---|---|
| High | OG wire | BK wire | 12Vdc |
| | OG/VT wire | | 0Vdc |
| Low | OG wire | | 0Vdc |
| | OG/VT wire | | 12Vdc |

If voltage is not as indicated, test switch and/or wires from element to switch. Refer to *WIRING DIAGRAM*.

## Testing Heated Seat and Grip Switches

Measure switch resistance as per following table.

| SWITCH POSITION | PROBE | | RESISTANCE |
|---|---|---|---|
| High | Pin 6 | Pin 8 | Close to 0 Ω |
| Off | Pin 6 | Pin 8 | O.L. |
| | | Pin 5 | O.L. |
| Low | Pin 6 | Pin 5 | Close to 0 Ω |

If resistance is not as specified, replace switch.

If resistance is as specified, continue testing.

Start and idle engine.

NOTE: On some models, you may need to increase RPM to above 2000 RPM in order to power this secondary 12v circuit.

Measure voltage at the switch connector as indicated in following table.

| SWITCH POSITION | PROBE | | VOLTAGE (APPROXIMATELY) |
|---|---|---|---|
| Any | Pin 6 | Chassis ground | 12Vdc |

If voltage is not as indicated, test power distribution circuit to switch. Refer to *WIRING DIAGRAM*.

# DRIVE BELT (EFI AND E-TEC)

## SERVICE TOOLS

| Description | Part Number | Page |
|---|---|---|
| TENSIOMETER | 414 348 200 | 345 |

Midwest Manuals
Green Manuals
Paperless Manuals
For a Better Tomorrow
www.green-manuals.com
If you bought this manual from any other seller please leave them
NEGATIVE feedback and notify us at bestshopmanuals@gmail.com

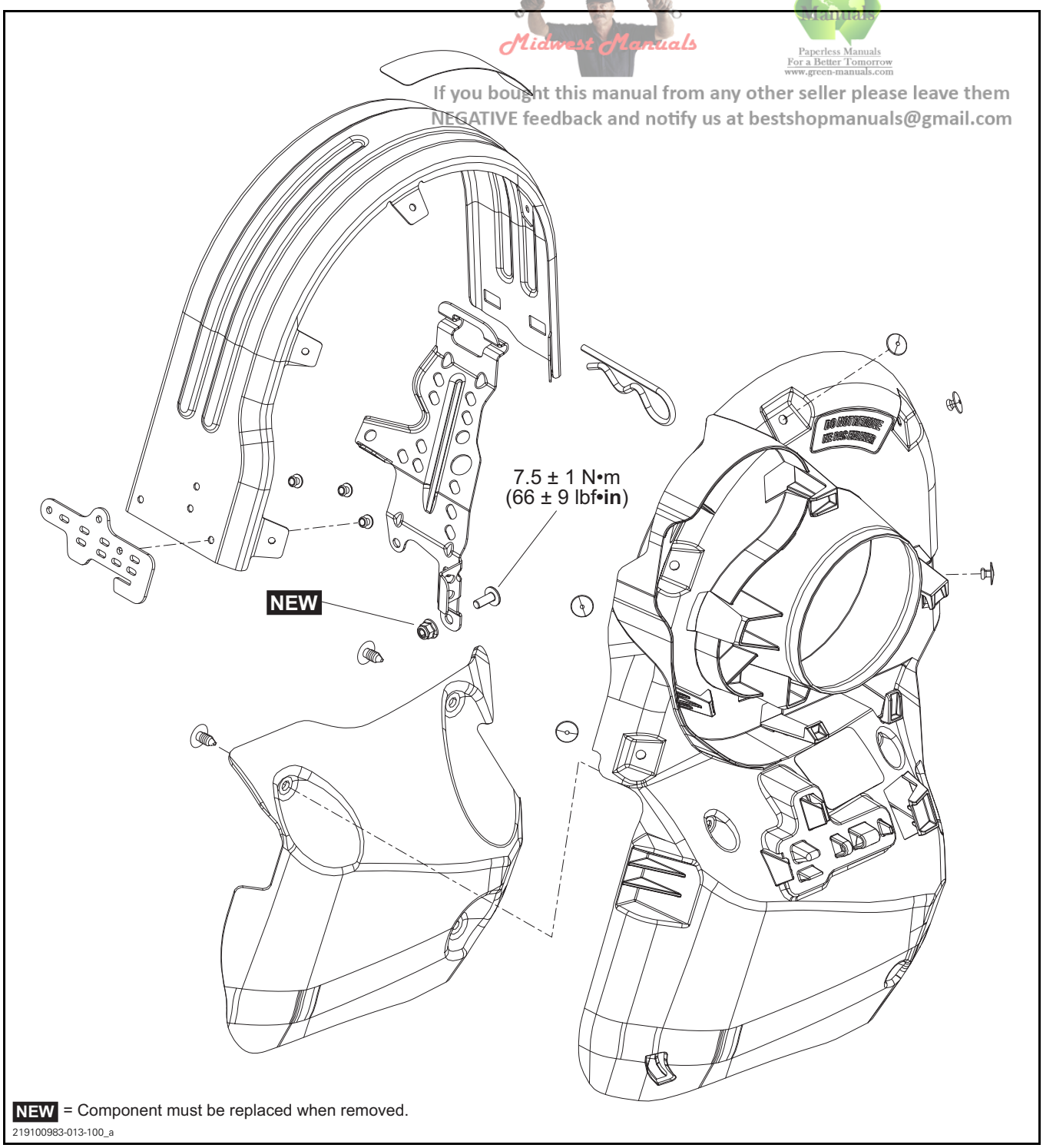


**NEW** = Component must be replaced when removed.

219100983-013-100_a

# GENERAL

## DRIVE BELT APPLICATION

Always use the drive belt specified in the BRP *PARTS CATALOG* as applicable to vehicle and engine model.

# TROUBLESHOOTING

### VEHICLE CREEPS FORWARD AT IDLE

1. Improper drive belt height (too high)
   - *Refer to ADJUSTING THE DRIVE BELT HEIGHT procedure in this subsection.*

### ENGINE STALLS WHEN ENGAGING RER

1. Improper drive belt height (too high)
   - *Refer to ADJUSTING THE DRIVE BELT HEIGHT procedure in this subsection.*

# PROCEDURES

## DRIVE BELT GUARD

NOTE: Belt guard is purposely made slightly oversize to maintain tension on its pins and retainers preventing undue noise and vibration.

### Removing the Drive Belt Guard

1. Remove LH side panel.
2. Remove retaining pin.

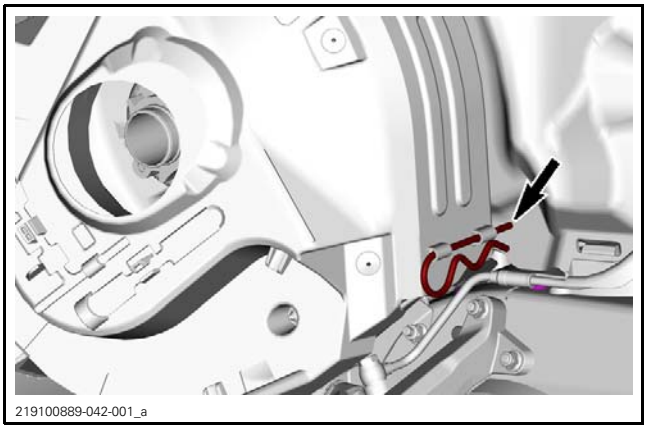
219100889-042-001_a

3. Lift rear portion of guard then release from front tabs.

### Installing the Drive Belt Guard

1. Insert belt guard tab in front support slot.

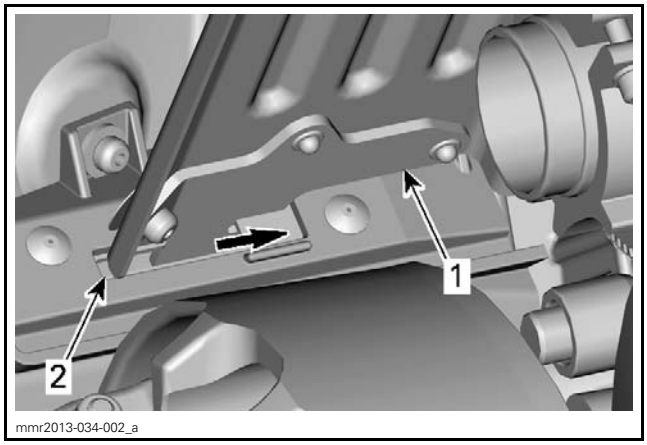

mmr2013-034-002_a

*1. Belt guard tab*
*2. Front support slot*

2. Push drive belt guard toward engine then toward front of vehicle.

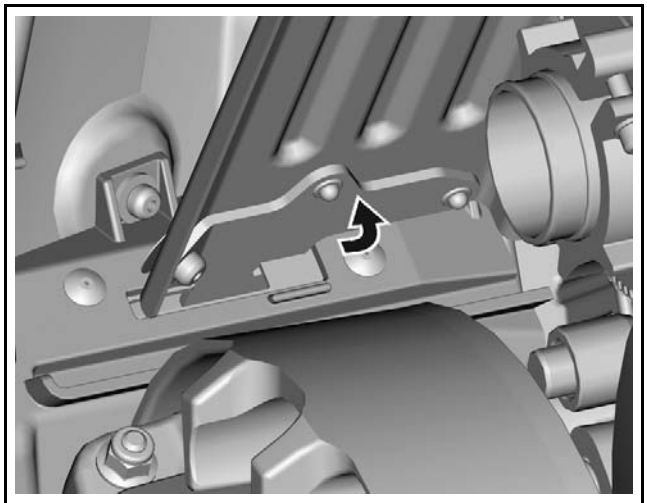
mmr2013-034-006_a

3. Position rear portion of the drive belt guard over the retainer and secure it using the retaining pin.

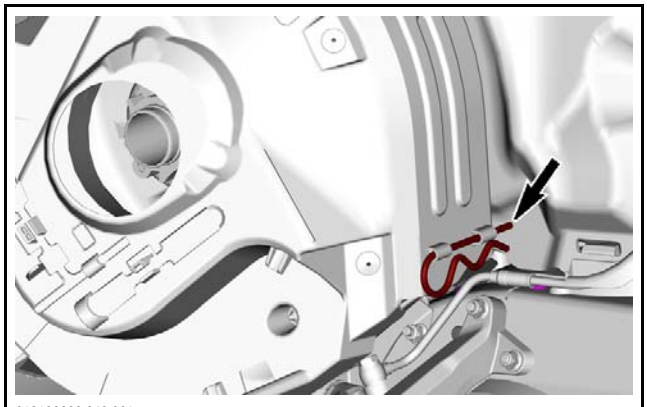
219100889-042-001_a

# DRIVE BELT GUARD SUPPORT

## Removing the Drive Belt Guard Support

1. Remove the drive belt guard.
2. Remove screws securing the support to vehicle.

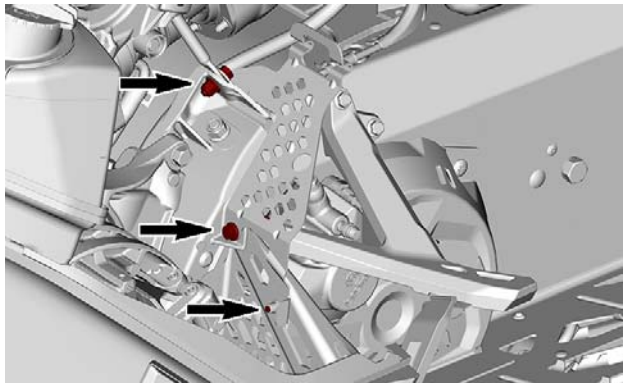
mmr2017-039-003_a

## Installing the Drive Belt Guard Support

The installation is the reverse of the removal procedure. However pay attention to the following.

| TIGHTENING TORQUE | |
|---|---|
| Drive belt guard support Torx screw | 7.5 N•m ± 1 N•m (66 lbf•**in** ± 9 lbf•**in**) |
| Hexagonal flange elastic nut | 10 N•m ± 2 N•m (89 lbf•**in** ± 18 lbf•**in**) |

# DRIVE BELT

## Removing the Drive Belt

1. Remove tether cord cap from engine cut-off switch.
2. Remove LH side panel.
3. Remove drive belt guard, refer to *REMOVING THE DRIVE BELT GUARD*.
4. Insert the driven pulley expander provided in the tool kit in the threaded hole on the adjuster hub as illustrated.

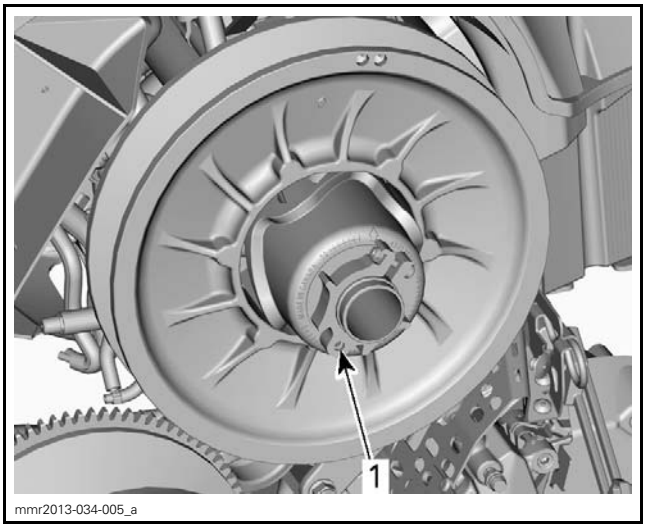

mmr2013-034-005_a

*1. PULLEY expander to be installed here - on Adjuster hub*

5. Open the driven pulley by screwing the tool in.
6. Remove the belt by slipping it over the top of the driven pulley, then out of the drive pulley.

## Inspecting the Drive Belt

Inspect belt for:
– Cracks
– Fraying
– Abnormal wear (uneven wear, wear on one side, missing cogs, torn fabric).

If abnormal wear is noted, the probable cause could be:
– Pulley misalignment
– Excessive RPM with frozen track
– Fast starts without warm-up period
– Scratched or rusty sheave
– Oil on belt
– Distorted spare belt.

Check drive belt width. Replace the drive belt if its width is under minimum recommended specification.

| **DRIVE BELT WIDTH** | |
|---|---|
| NEW | WEAR LIMIT |
| 38.3 mm (1.508 in) | 35.9 mm (1.413 in) |

## Installing the Drive Belt

1. If necessary, open the driven pulley, refer to *REMOVING THE DRIVE BELT*.
2. Insert drive belt in the drive pulley, then pull it over the driven pulley.

**NOTICE** **Do not force or use tools to pry the belt into place, as this could cut or break the cords in the belt.**

NOTE: The maximum drive belt life span is obtained when the belt is installed with the arrows on the belt pointing in the direction of rotation.

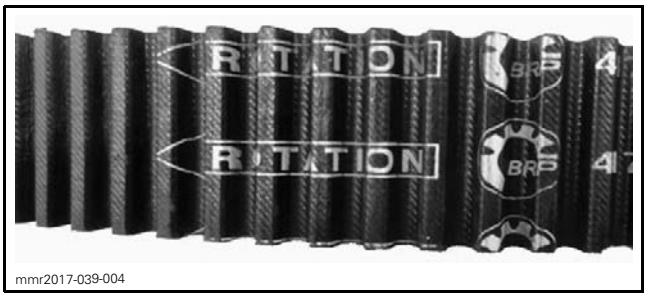

mmr2017-039-004

3. Unscrew and remove the driven pulley expander from the driven pulley.
4. Rotate the driven pulley several times to properly set the belt between the sheaves.
5. Adjust drive belt height. Refer to *ADJUSTING THE DRIVE BELT HEIGHT* procedure.
6. Install drive belt guard, refer to *INSTALLING THE DRIVE BELT GUARD*.
7. Install LH side panel.

## Adjusting the Drive Belt Height

1. Remove tether cord cap from engine cutout switch.
2. Remove LH side panel.
3. Remove drive belt guard, refer to *REMOVING THE DRIVE BELT GUARD*.
4. Loosen the clamping screw.

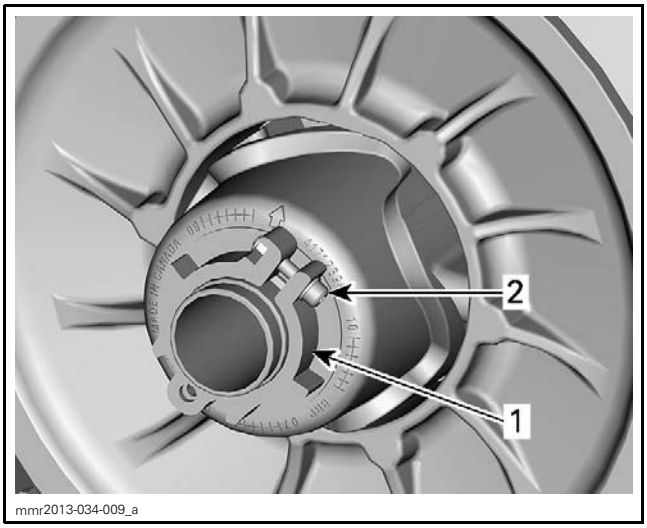

mmr2013-034-009_a

*1. Adjustment ring*
*2. Clamping screw*

5. Using the suspension adjustment tool provided in the tool kit, turn the adjustment ring 1/4 turn at a time then rotate the driven pulley to properly set the belt between the pulley sheaves.

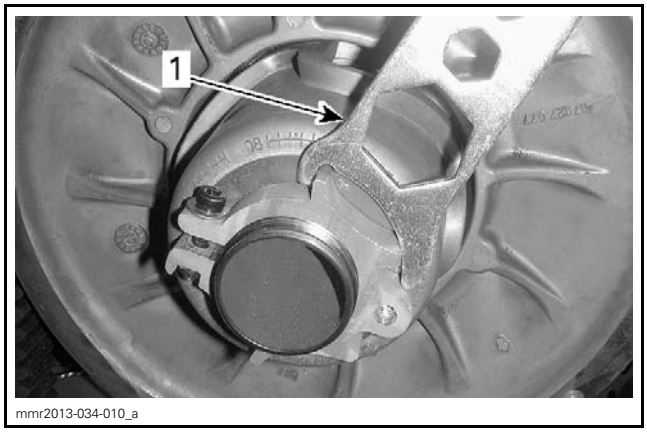

mmr2013-034-010_a

*1. Suspension adjustment tool*

NOTE: The adjustment ring has left hand treads.

### *600 EFI*

Repeat step 5 until the drive belt outer surface is even with the driven pulley edge.

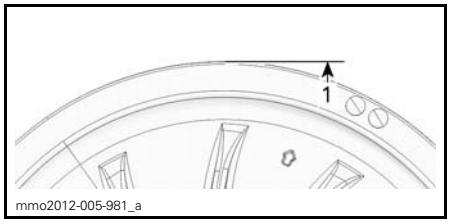

mmo2012-005-981_a

***600 EFI - PRELIMINARY SETTING***
*1. Drive belt outer surface is even with the driven pulley edge*

### *850 E-TEC*

Repeat step 5 until the cord of drive belt is just hidden by the driven pulley edge.

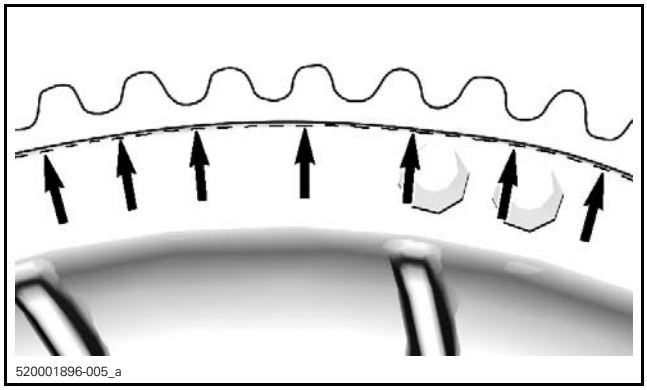
520001896-005_a

***850 E-TEC - PRELIMINARY SETTING***

### *600R E-TEC*

Repeat step 5 until the lowest portion of the cogs on the external surface of drive belt is even with the driven pulley edge.

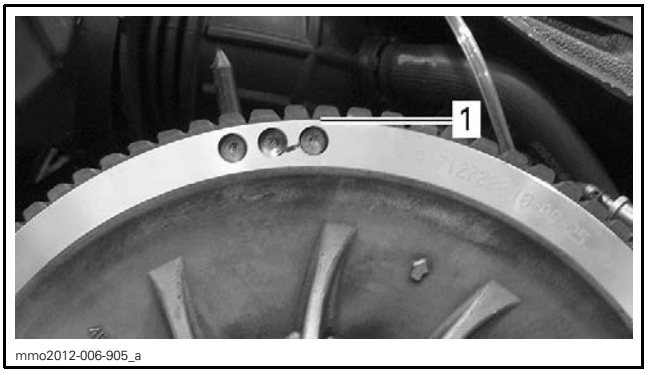


*600R E-TEC - PRELIMINARY SETTING*
*1. Lowest portion of cogs even with external surface of drive belt*

### *All engines*

NOTE: Turning the adjustment ring counterclockwise lowers the belt in the pulley. Turning the ring clockwise raises the belt in the pulley.

6. Tighten the adjustment ring clamping screw.

| TIGHTENING TORQUE | |
|---|---|
| Adjustment ring clamping screw | 5.5 N•m ± 0.5 N•m (49 lbf•**in** ± 4 lbf•**in**) |

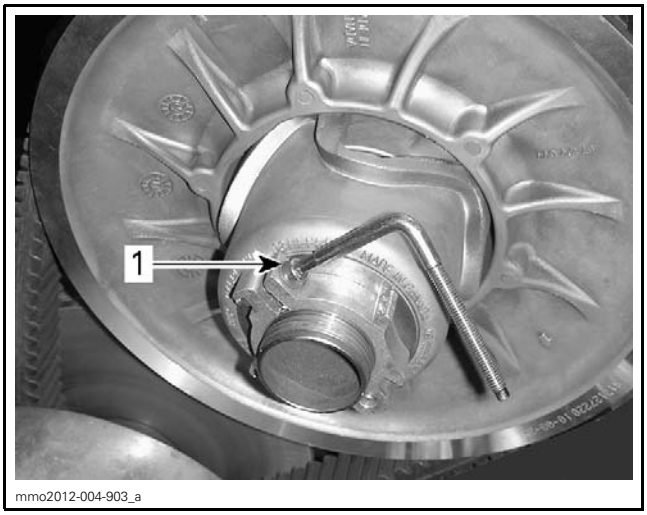


*1. Clamping screw*

7. Install belt guard, refer to *INSTALLING THE DRIVE BELT GUARD*.
8. Install LH side panel.
9. Start engine and check if vehicle creeps.
   - 9.1 If vehicle does not creep, adjustment is complete.
   - 9.2 If vehicle creeps, check the drive belt deflection.

### Reverse Activation

Reverse may not activate or may be harder to activate if the belt is positioned too high in the driven pulley. If reverse activation does not work properly, ensure the drive belt is properly adjusted.

Adjust the drive belt lower in the driven pulley if needed.

## Verifying the Drive Belt Deflection

1. Make sure drive belt height is adjusted (preliminary setting).
2. Position a reference rule on drive belt.
3. Use the TENSIOMETER (P/N 414 348 200) as explained below.
4. Set deflection as per following table using bottom O-ring.

| DRIVE BELT DEFLECTION | |
|---|---|
| DRIVE BELT DEFLECTION SETTING | 32 mm ± 5 mm (1.26 in ± .2 in) |




*DEFLECTION SETTING*
*1. Bottom O-ring*

5. Place upper O-ring to 0 kgf (0 lbf).




*LOAD READING*
*1. Upper O-ring*

6. Apply pressure until bottom O-ring (deflection) is flush with edge of rule.

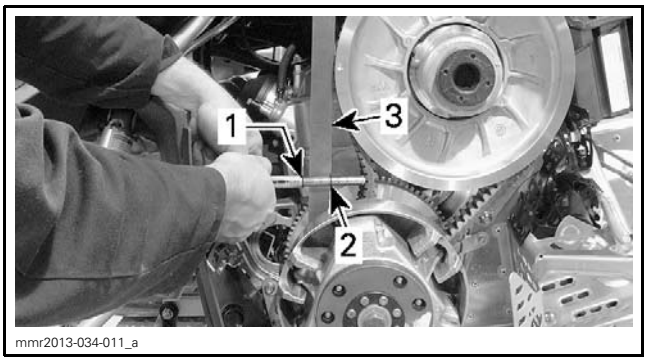


*TYPICAL*
*1. Upper O-ring — load*
*2. Bottom O-ring — deflection*
*3. Reference rule*

7. Read drive belt load. Compare result with the following table.

| DRIVE BELT DEFLECTION | |
|---|---|
| DRIVE BELT LOAD READING | 11.30 kgf (25 lbf) |

8. If deflection is within specification, drive belt is properly adjusted.
9. If deflection is out of specification, try the following:
   – Lower drive belt height from initial setting.
   – Try another drive belt.
10. If proper load still cannot be obtained, check the following:
   – Inspect engine supports.
   – Inspect countershaft and bearing.
   – Inspect chassis for damages.

# DRIVE BELT (ACE)

## SERVICE TOOLS

| Description | Part Number | Page |
|---|---|---|
| TENSIOMETER | 414 348 200 | 351 |

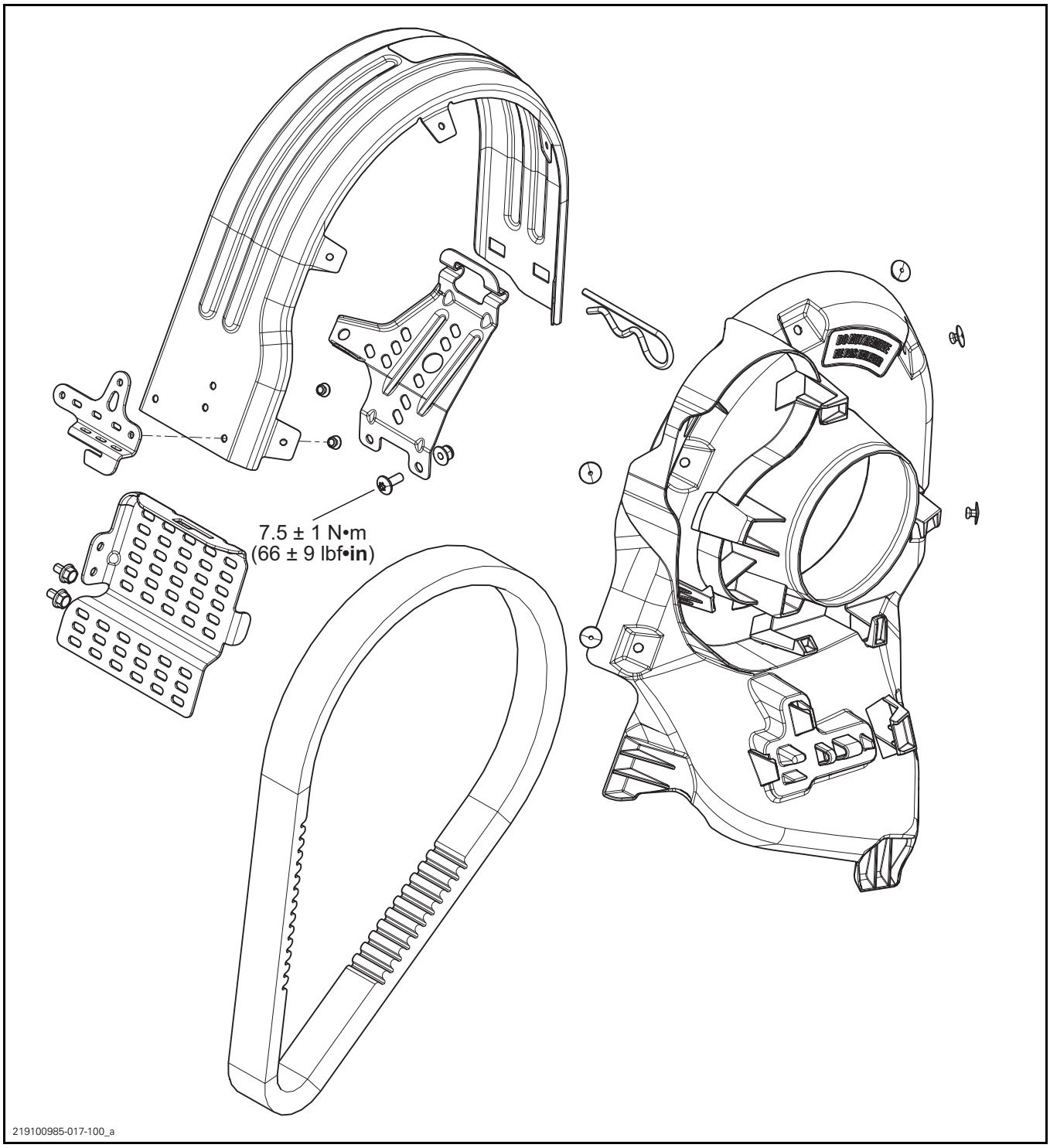

# GENERAL

## DRIVE BELT APPLICATION

Always use the drive belt specified in the BRP *PARTS CATALOG* as applicable to vehicle and engine model.

# TROUBLESHOOTING

### VEHICLE CREEPS FORWARD AT IDLE

1. Improper drive belt height (too high)
   - *Refer to ADJUSTING THE DRIVE BELT HEIGHT procedure in this subsection.*

### ENGINE STALLS WHEN ENGAGING RER

1. Improper drive belt height (too high)
   - *Refer to ADJUSTING THE DRIVE BELT HEIGHT procedure in this subsection.*

# PROCEDURES

## DRIVE BELT GUARD

NOTE: Belt guard is purposely made slightly oversize to maintain tension on its pins and retainers preventing undue noise and vibration.

### Removing the Drive Belt Guard

1. Remove LH side panel.
2. Remove retaining pin.

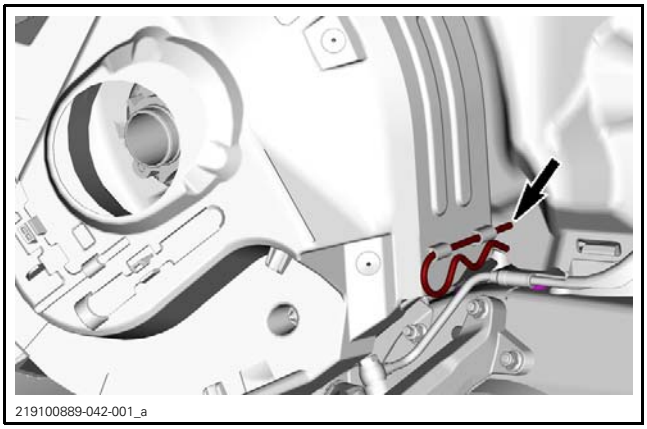
219100889-042-001_a

3. Lift rear portion of guard then release from front tabs.

### Installing the Drive Belt Guard

1. Insert belt guard tab in front support slot.

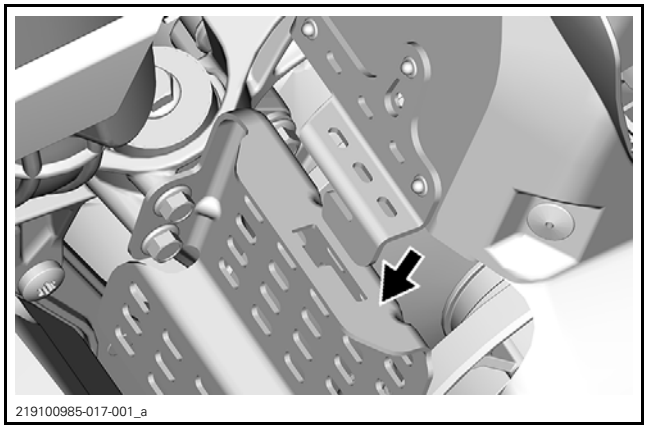
219100985-017-001_a

2. Push drive belt guard toward engine then toward front of vehicle.

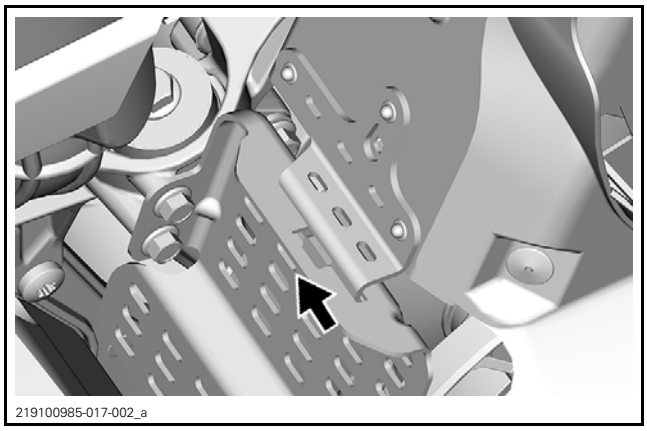
219100985-017-002_a

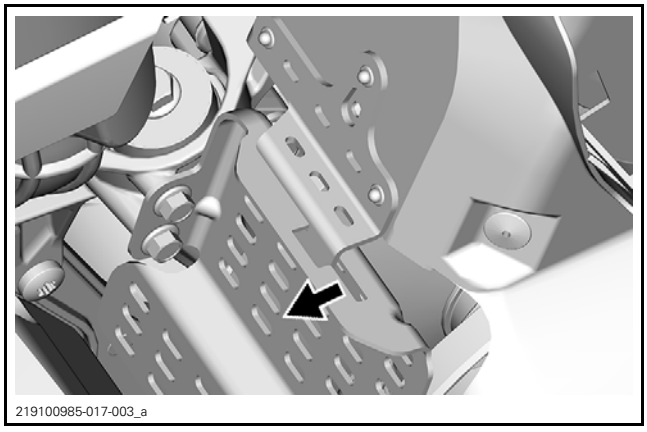
219100985-017-003_a

3. Position rear portion of the drive belt guard over the retainer and secure it using the retaining pin.

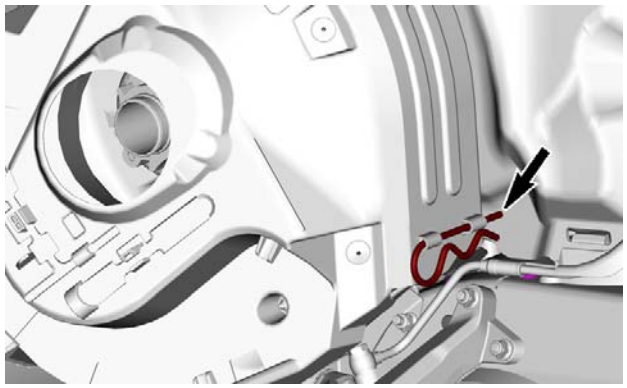
219100889-042-001_a

# DRIVE BELT GUARD SUPPORT

## Removing the Drive Belt Guard Support

1. Remove the drive belt guard.
2. Remove screws securing the support to vehicle.

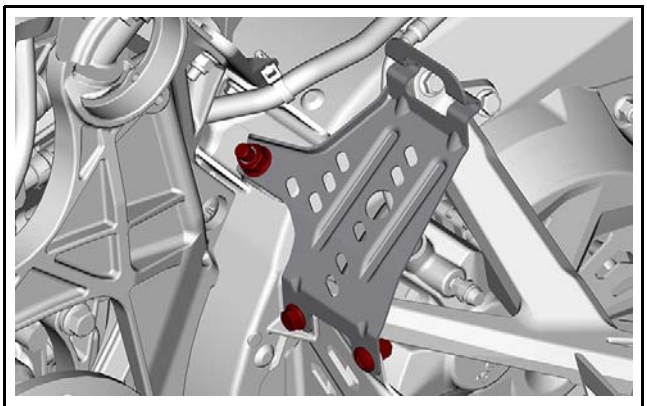
219100985-017-004

## Installing the Drive Belt Guard Support

The installation is the reverse of the removal procedure. However, pay attention to the following.

| TIGHTENING TORQUE | |
|---|---|
| M6 Torx screw | 7.5 N•m ± 1 N•m (66 lbf•**in** ± 9 lbf•**in**) |
| M6 Hexagonal flange Screw | 10 N•m ± 2 N•m (89 lbf•**in** ± 18 lbf•**in**) |
| M8 Hexagonal flange nut | 24.5 N•m ± 3.5 N•m (18 lbf•ft ± 3 lbf•ft) |

# DRIVE BELT

## Removing the Drive Belt

1. Remove tether cord cap from engine cut-off switch.
2. Remove LH side panel.
3. Remove drive belt guard, refer to *REMOVING THE DRIVE BELT GUARD*.
4. Insert the driven pulley expander provided in the tool kit in the threaded hole on the adjuster hub as illustrated.

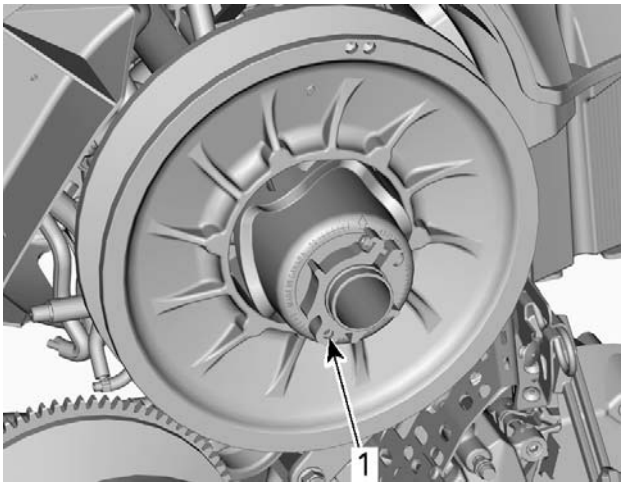

mmr2013-034-005_a

*1. PULLEY expander to be installed here - on Adjuster hub*

5. Open the driven pulley by screwing the tool in.
6. Remove the belt by slipping it over the top of the driven pulley, then out of the drive pulley.

## Inspecting the Drive Belt

Inspect belt for:
– Cracks
– Fraying
– Abnormal wear (uneven wear, wear on one side, missing cogs, torn fabric).

If abnormal wear is noted, the probable cause could be:
– Pulley misalignment
– Excessive RPM with frozen track
– Fast starts without warm-up period
– Scratched or rusty sheave
– Oil on belt
– Distorted spare belt.

Check drive belt width. Replace the drive belt if its width is under minimum recommended specification.

| DRIVE BELT WIDTH | |
|---|---|
| NEW | WEAR LIMIT |
| 38.3 mm (1.508 in) | 35.9 mm (1.413 in) |

## Installing the Drive Belt

1. If necessary, open the driven pulley, refer to *REMOVING THE DRIVE BELT*.
2. Insert drive belt in the drive pulley, then pull it over the driven pulley.

**NOTICE** **Do not force or use tools to pry the belt into place, as this could cut or break the cords in the belt.**

NOTE: The maximum drive belt life span is obtained when the belt is installed with the arrows on the belt pointing in the direction of rotation.

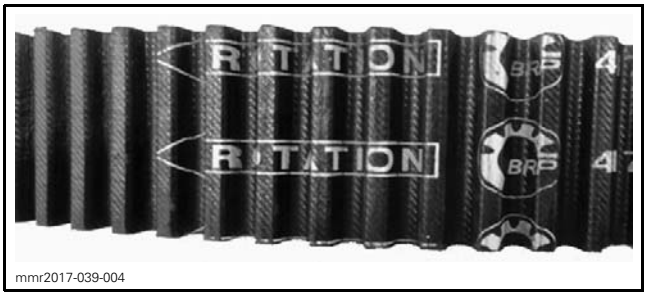

mmr2017-039-004

3. Unscrew and remove the driven pulley expander from the driven pulley.
4. Rotate the driven pulley several times to properly set the belt between the sheaves.
5. Adjust drive belt height. Refer to *ADJUSTING THE DRIVE BELT HEIGHT* procedure.
6. Install drive belt guard, refer to *INSTALLING THE DRIVE BELT GUARD*.
7. Install LH side panel.

## Adjusting the Drive Belt Height

1. Remove tether cord cap from engine cutout switch.
2. Remove LH side panel.
3. Remove drive belt guard, refer to *REMOVING THE DRIVE BELT GUARD*.
4. Loosen the clamping screw.

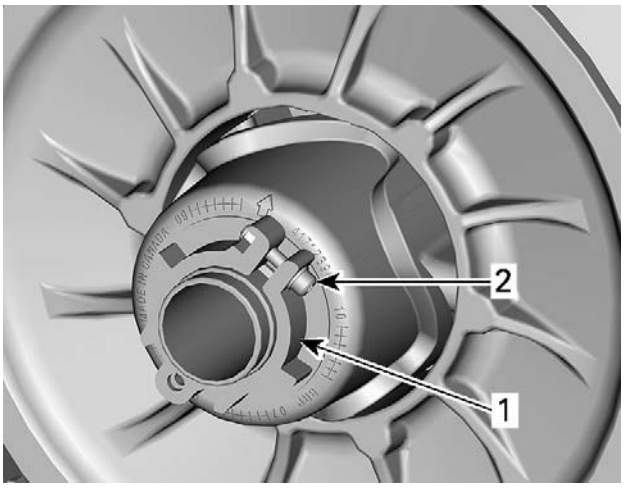

mmr2013-034-009_a

*1. Adjustment ring*
*2. Clamping screw*

5. Using the suspension adjustment tool provided in the tool kit, turn the adjustment ring 1/4 turn at a time then rotate the driven pulley to properly set the belt between the pulley sheaves.

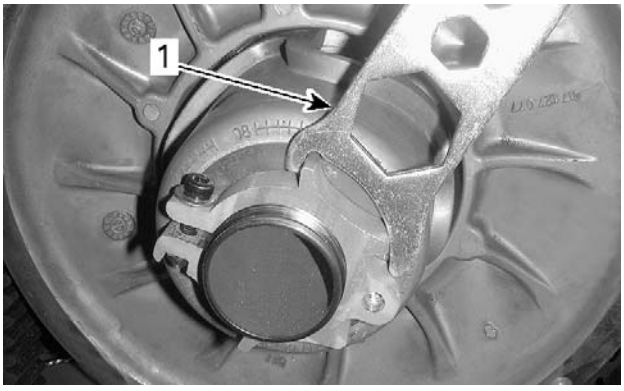

mmr2013-034-010_a

*1. Suspension adjustment tool*

NOTE: The adjustment ring has left hand treads.

Repeat step 5 until the lowest portion of the cogs on the external surface of drive belt is even with the driven pulley edge.

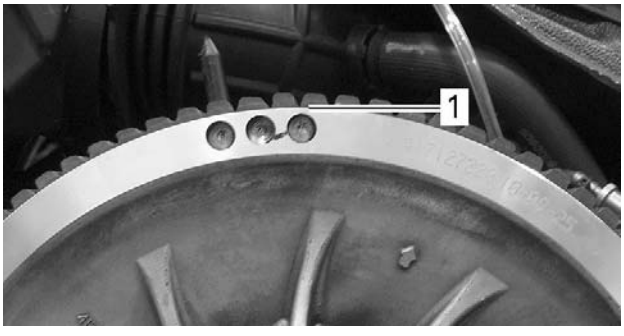

mmo2012-006-905_a

*PRELIMINARY SETTING*
*1. Lowest portion of cogs even with external surface of drive belt*

NOTE: Turning the adjustment ring counterclockwise lowers the belt in the pulley. Turning the ring clockwise raises the belt in the pulley.

6. Tighten the adjustment ring clamping screw.

| TIGHTENING TORQUE | |
|---|---|
| Adjustment ring clamping screw | 5.5 N•m ± 0.5 N•m (49 lbf•**in** ± 4 lbf•**in**) |

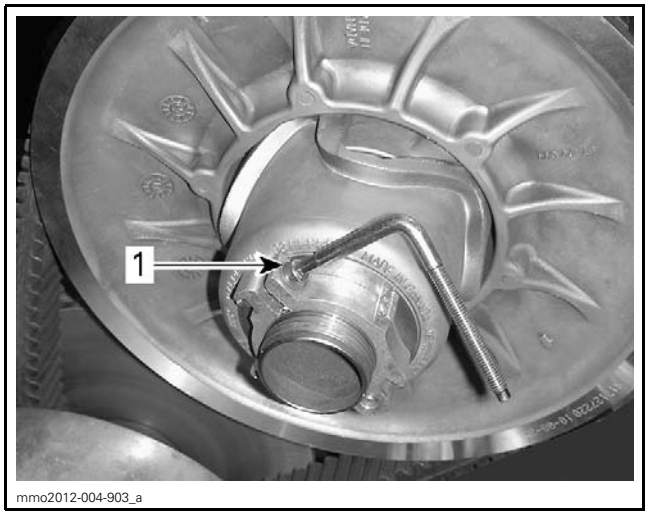


*1. Clamping screw*

7. Install belt guard, refer to *INSTALLING THE DRIVE BELT GUARD*.
8. Install LH side panel.
9. Start engine and check if vehicle creeps.
   - 9.1 If vehicle does not creep, adjustment is complete.
   - 9.2 If vehicle creeps, check the drive belt deflection.

### Reverse Activation

Reverse may not activate or may be harder to activate if the belt is positioned too high in the driven pulley. If reverse activation does not work properly, ensure the drive belt is properly adjusted.

Adjust the drive belt lower in the driven pulley if needed.

## Verifying the Drive Belt Deflection

| REQUIRED TOOL | |
|---|---|
| TENSIOMETER (P/N 414 348 200) |  |

1. Make sure drive belt height is adjusted (preliminary setting).
2. Position a reference rule on drive belt.
3. Use the tensiometer as explained below.
4. Set deflection as per following table using bottom O-ring.

| DRIVE BELT DEFLECTION | |
|---|---|
| DRIVE BELT DEFLECTION SETTING | 32 mm ± 5 mm (1.26 in ± .2 in) |




*DEFLECTION SETTING*
*1. Bottom O-ring*

5. Place upper O-ring to 0 kgf (0 lbf).




*LOAD READING*
*1. Upper O-ring*

6. Apply pressure until bottom O-ring (deflection) is flush with edge of rule.

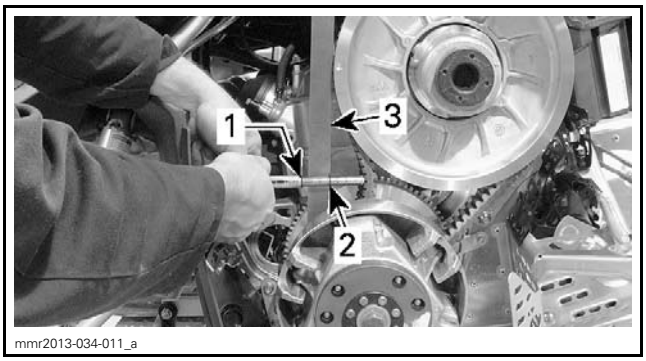


*TYPICAL*
*1. Upper O-ring — load*
*2. Bottom O-ring — deflection*
*3. Reference rule*

7. Read drive belt load. Compare result with the following table.

| DRIVE BELT DEFLECTION | |
|---|---|
| DRIVE BELT LOAD READING | 11.30 kgf (25 lbf) |

8. If deflection is within specification, drive belt is properly adjusted.

9. If deflection is out of specification, try the following:
   – Lower drive belt height from initial setting.
   – Try another drive belt.
10. If proper load still cannot be obtained, check the following:
   – Inspect engine supports.
   – Inspect countershaft and bearing.
   – Inspect chassis for damages.

# DRIVE PULLEY (EFI, 900 ACE AND 900 ACE TURBO)

## SERVICE TOOLS

| Description | Part Number | Page |
|---|---|---|
| CIRCLIP INSTALLER/REMOVER | 529 036 375 | 355 |
| CLUTCH HOLDER | 529 036 369 | 354, 364 |
| DRIVE PULLEY OPENING TOOL | 529 036 378 | 355 |
| DRIVE PULLEY SUPPORT | 529 036 371 | 355 |
| GREASE INJECTOR | 529 036 376 | 361 |
| PDRIVE PULLER | 529 036 370 | 354–355 |
| PULLEY SPRING COMPRESSOR TOOL | 529 036 373 | 355 |
| REMOVING AXLE TOOL | 529 036 372 | 355 |

## SERVICE PRODUCTS

| Description | Part Number | Page |
|---|---|---|
| CLUTCH AND PULLEY FLANGE CLEANER PRO S1 | 779244 | 360 |
| ISOFLEX GREASE TOPAS NB 52 | 293 550 021 | 361 |

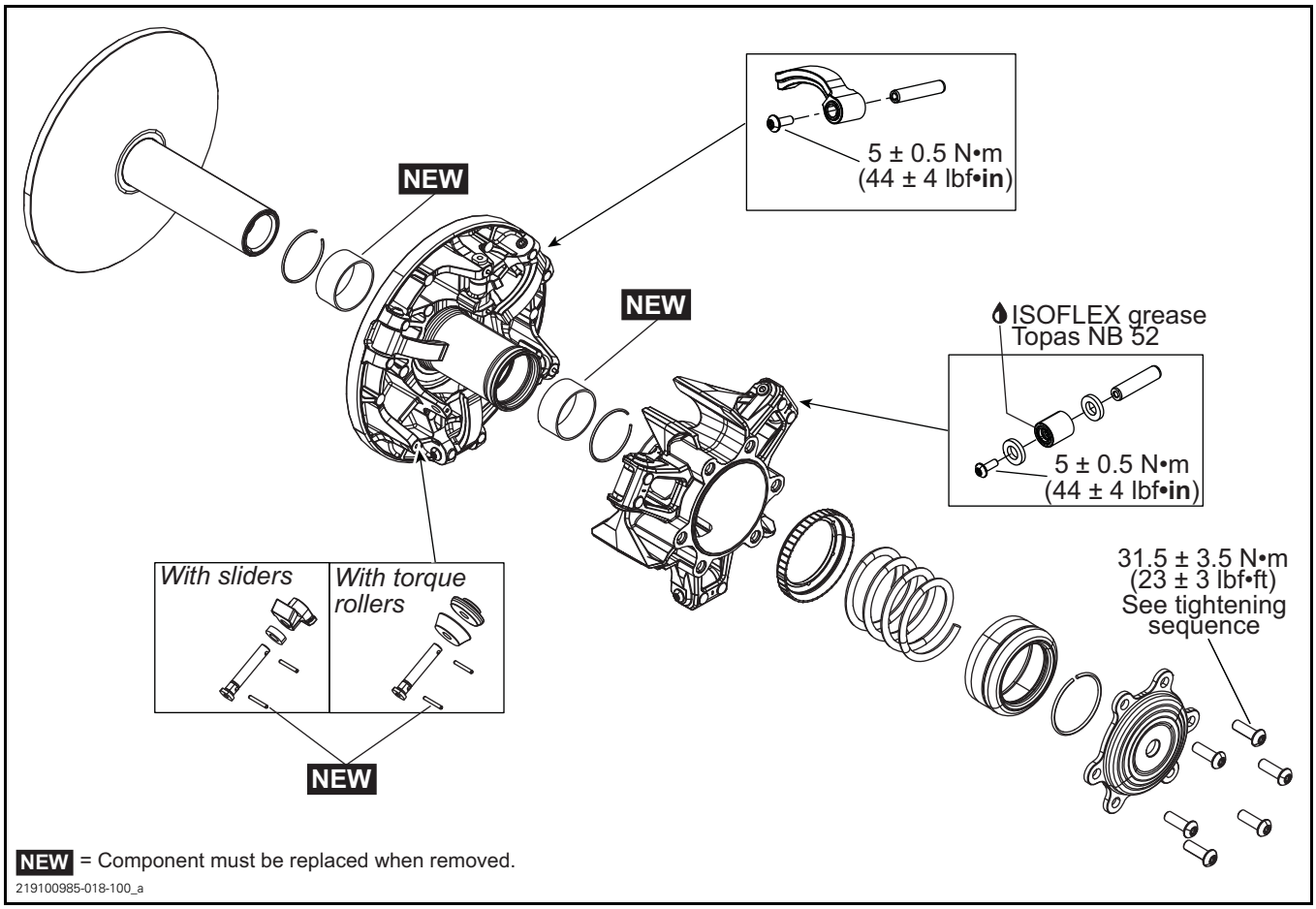

# GENERAL

The pDrive pulleys are lubrication-free drive pulleys. Only the needle bearings inside the rollers need to be lubricated when replaced.

Always refer to appropriate *PARTS CATALOG* for replacement parts.

**NOTICE** Never use any type of impact wrench for drive pulley removal and installation. The use of impact wrench could damage the drive pulley and modify the calibration.

Some drive pulley components (like the spring and ramps) can be changed to improve vehicle performance in high altitude regions. A Service Bulletin provides information about calibration according to altitude.

**NOTICE** Such modifications should only be performed by experienced mechanics since they can greatly affect vehicle performance. Verify spring specifications before installation. Do not only refer to the spring color code.

**⚠ WARNING**

Any drive pulley repairs must be performed by an authorized Ski-Doo dealer. Subcomponent installation and assembly tolerances require strict adherence to procedures detailed.

During assembly/installation, use torque values as in the exploded view.

Clean threads before applying a threadlocker. Refer to *SELF-LOCKING FASTENERS* and *LOCTITE APPLICATION* at the beginning of this manual for complete procedure.

**⚠ WARNING**

Torque wrench tightening specifications must be strictly adhered to.
Locking devices must be replaced with new ones when removed (e.g.: locking tabs, elastic stop nuts, cotter pins, etc.).

# PROCEDURES

## DRIVE PULLEY

### Removing the Drive Pulley

| REQUIRED TOOLS | |
|---|---|
| CLUTCH HOLDER (P/N 529 036 369) |  |
| PDRIVE PULLER (P/N 529 036 370) |  |

1. Remove drive belt. Refer to *DRIVE BELT* subsection.
2. Remove the drive pulley screw access cap from the LH hull.

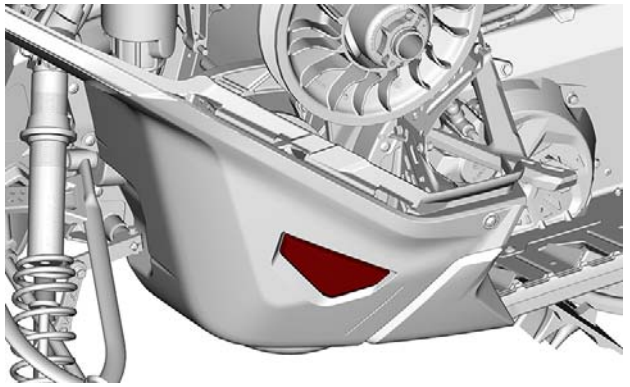
219100985-018-012

3. Remove the drive pulley bolt.
   3.1 Secure the drive pulley with the clutch holder.
   3.2 Using a breaker bar, remove the drive pulley bolt and its conical spring washer.

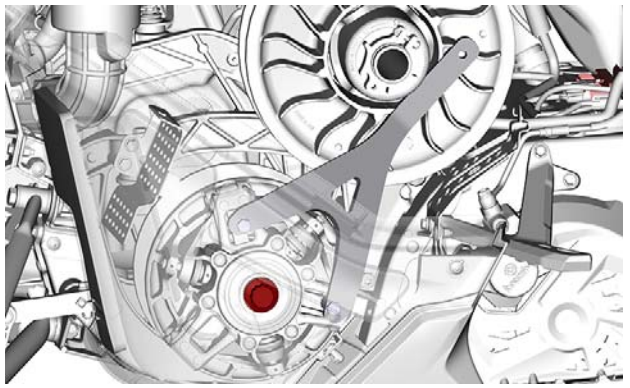
219100985-018-013

4. Remove the drive pulley from engine.
   4.1 Make sure the clutches holder is properly installed.

4.2 Screw the pDrive puller in place of the drive pulley bolt.

4.3 Tighten the pDrive puller until pulley is disengaged from the crankshaft end.

**NOTICE** These pulleys have metric threads. Do not use a puller with ANS (American National Standard) or IS (International Standard) type threads. Always tighten puller by hand to ensure that the drive pulley has the same type of threads (metric vs ANS or IS) prior to fully tightening.

## Disassembling the Drive Pulley

| REQUIRED TOOLS | |
|---|---|
| PDRIVE PULLER (P/N 529 036 370) |  |
| DRIVE PULLEY SUPPORT (P/N 529 036 371) |  |
| PULLEY SPRING COMPRESSOR TOOL (P/N 529 036 373) |  |
| CIRCLIP INSTALLER/REMOVER (P/N 529 036 375) |  |
| REMOVING AXLE TOOL (P/N 529 036 372) |  |
| DRIVE PULLEY OPENING TOOL (P/N 529 036 378) |  |

### Separating Fixed and Sliding Sheaves

To separate fixed sheave from sliding sheave, screw puller into fixed sheave shaft about 13 mm (1/2 in).

Raise drive pulley and hold it by the sliding sheave while knocking on puller head to disengage fixed sheave.

**NOTICE** NEVER tap on spider.

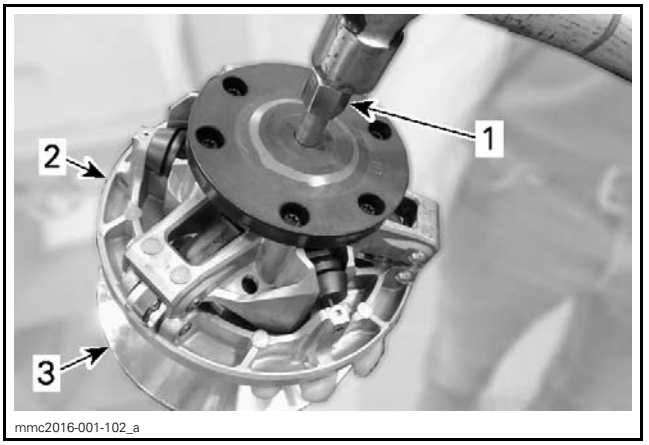


*1. Puller screwed 13 mm (1/2 in) in fixed sheave*
*2. Sliding sheave*
*3. Fixed sheave*

NOTE: No component marking is required before disassembly. This drive pulley features factory apposed index marks as references.

**NOTICE** Never use any type of torch to heat spider.

### Removing the Damper

1. Secure the drive pulley support in a vice.
2. Install the drive pulley over the support.

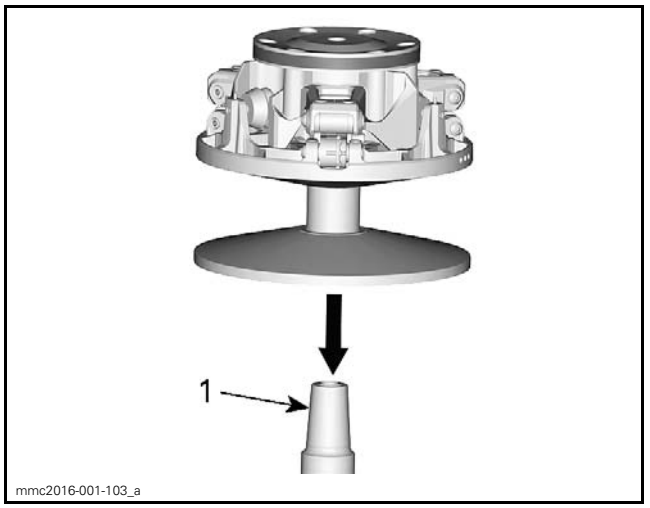


*1. Drive pulley support*

3. Remove the damper.

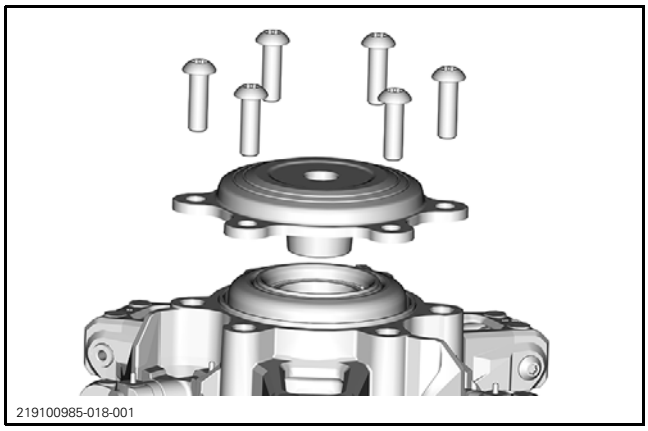
219100985-018-001

Removing the Spring

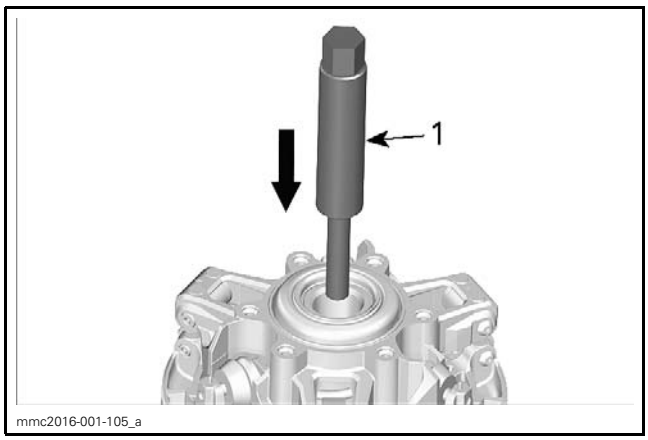

mmc2016-001-105_a

*1. Threaded shaft of the pulley spring compressor*

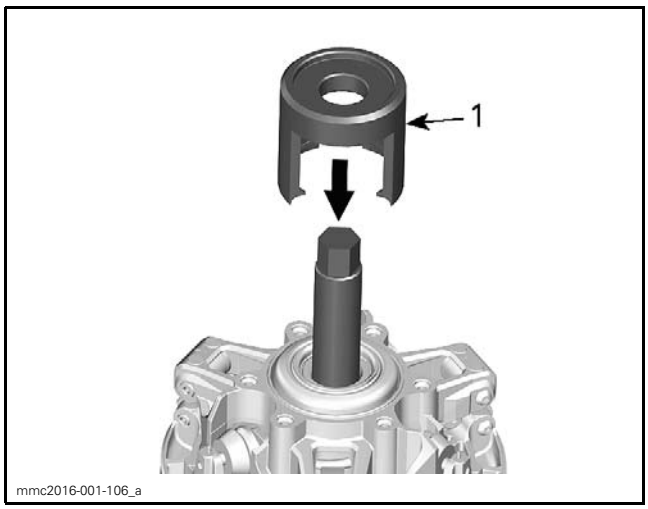

mmc2016-001-106_a

*1. Circlip installer/remover*

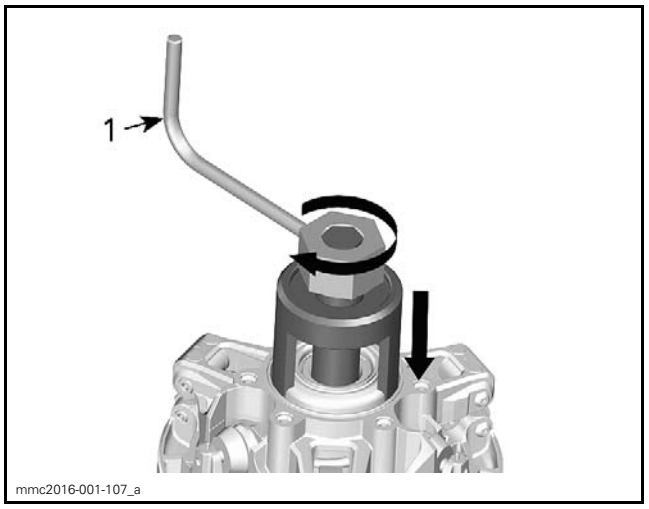

mmc2016-001-107_a

*1. Handle of the pulley spring compressor*

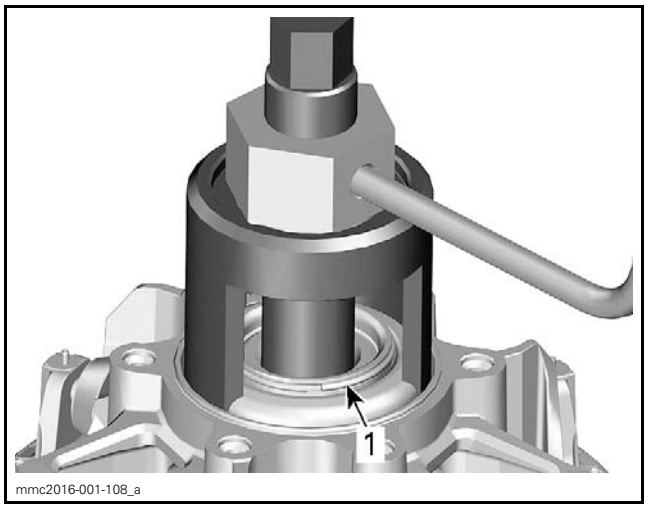

mmc2016-001-108_a

*1. Remove the circlip*

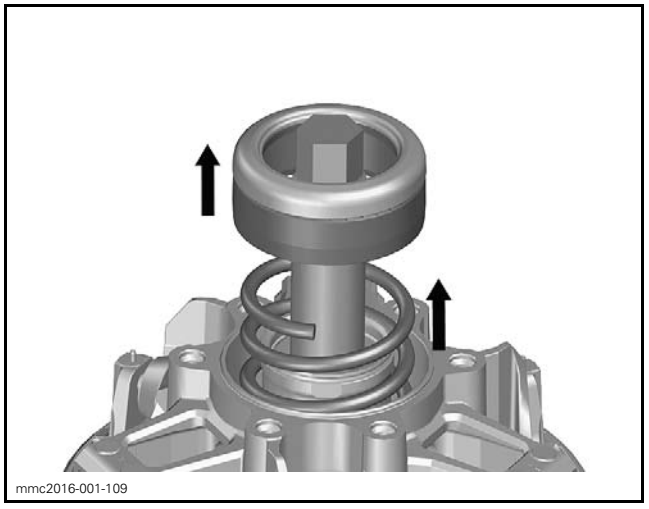
mmc2016-001-109

Removing the Spider

1. Remove the threaded shaft.

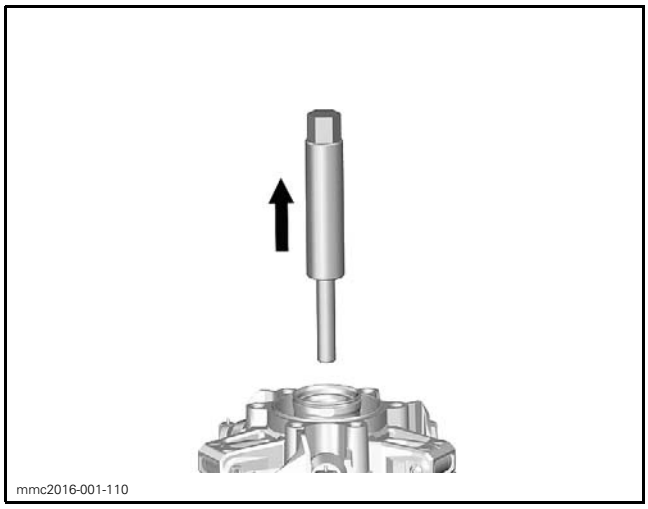
mmc2016-001-110

**NOTICE** Remove the threaded shaft to avoid damaging the bushings inside the spider.

2. Remove the spider.

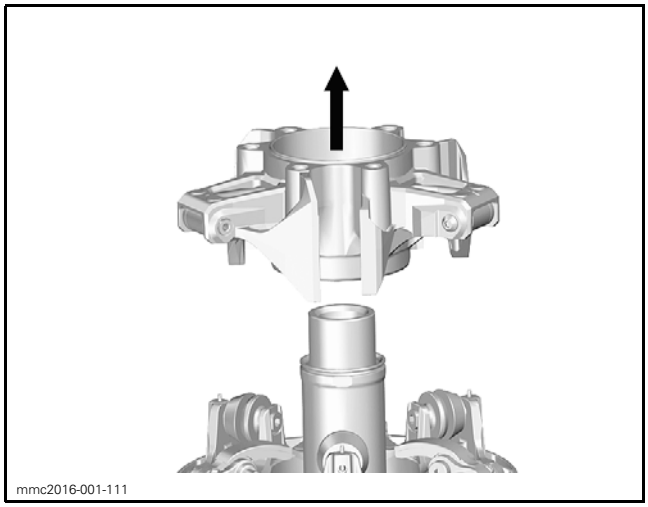
mmc2016-001-111

### Removing the Roller

1. Remove axle retaining screw.

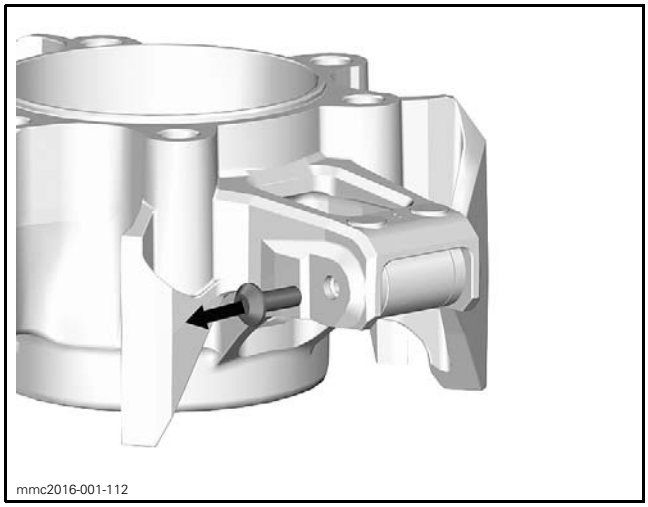
mmc2016-001-112

2. Remove the axle.

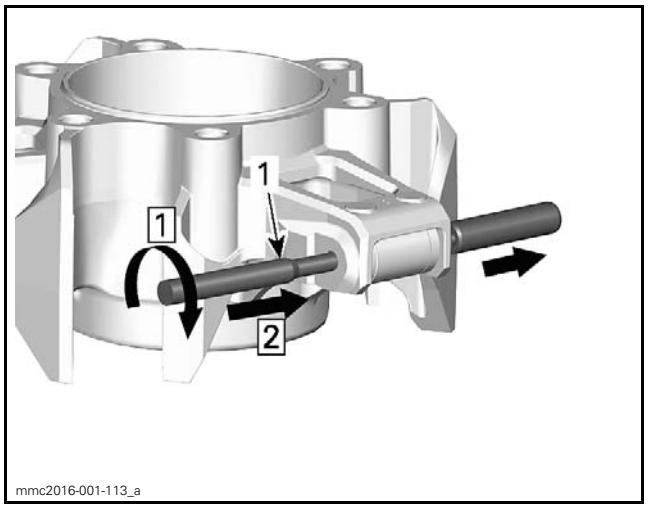

mmc2016-001-113_a

*1. Removing axle tool*

*Step 1: Screw the tool into the axle*
*Step 2: Push axle to the right side*

3. Remove the roller and its thrust washers.

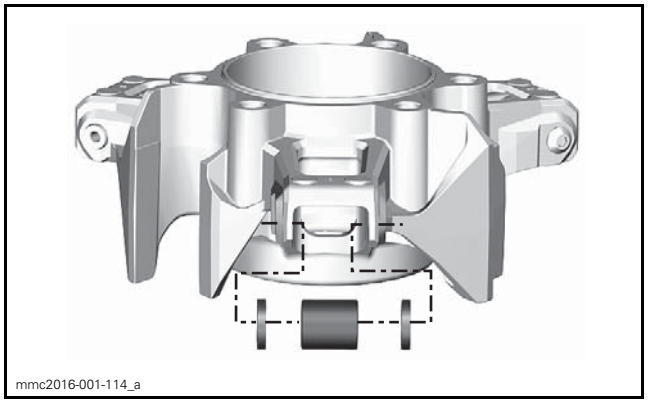
mmc2016-001-114_a

### Removing the Ramp (without Spider)

1. Remove axle retaining screw.

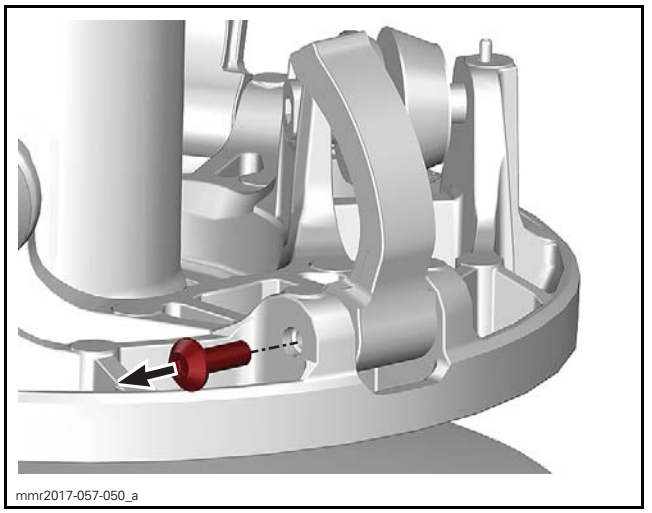
mmr2017-057-050_a

2. Remove the axle.

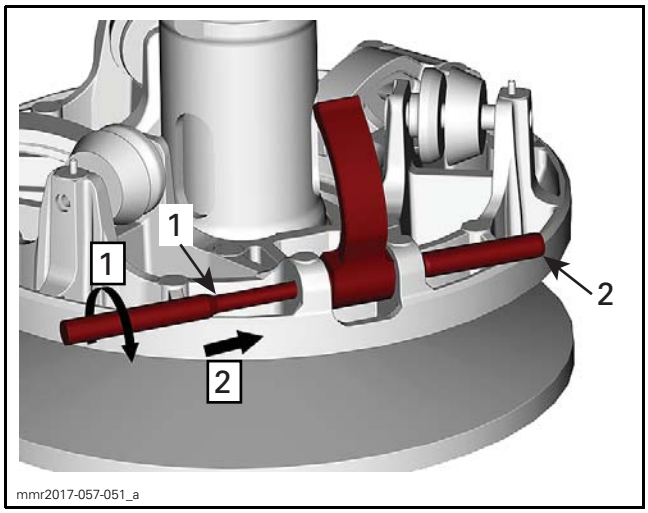


*1. Removing axle tool*
*2. Axle*

*Step 1: Screw the tool into the axle*
*Step 2: Push axle to the right side*

3. Remove ramp assembly.

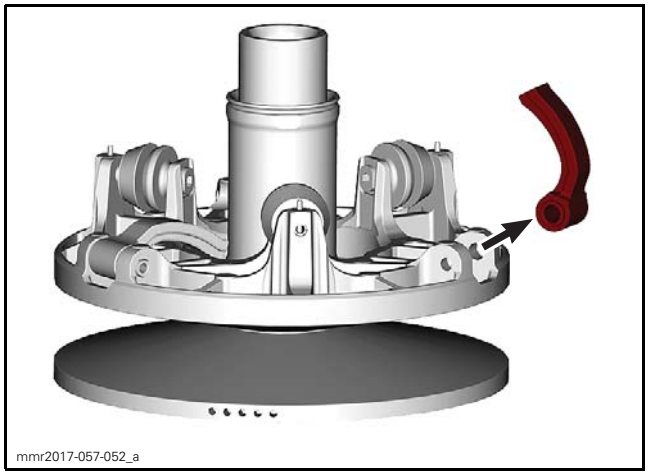


### Removing the Ramp (Spider Installed)

1. Lower the sliding sheave.
   1.1 Secure the drive pulley support in a vice.
   1.2 Install the drive pulley over the support.
   1.3 Install the drive pulley opening tool.

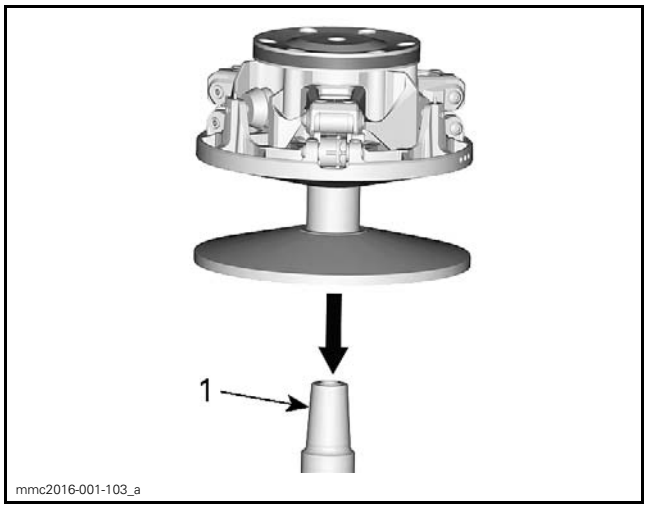


*1. Drive pulley support*

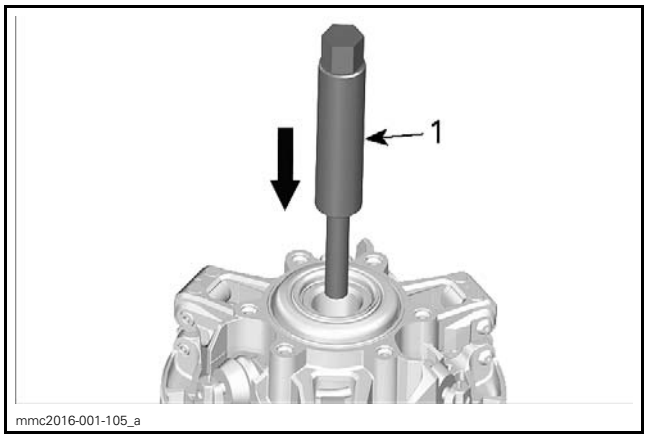


*1. Threaded shaft of the pulley spring compressor*

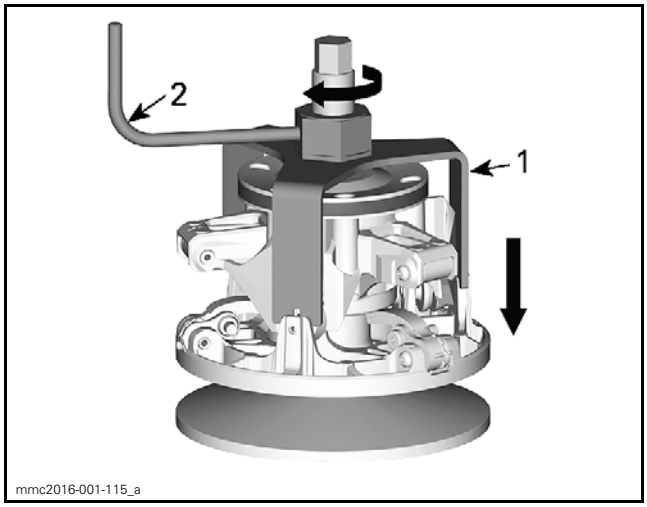


*1. Drive pulley opening tool*
*2. Handle of the pulley spring compressor*

2. Remove axle retaining screw.

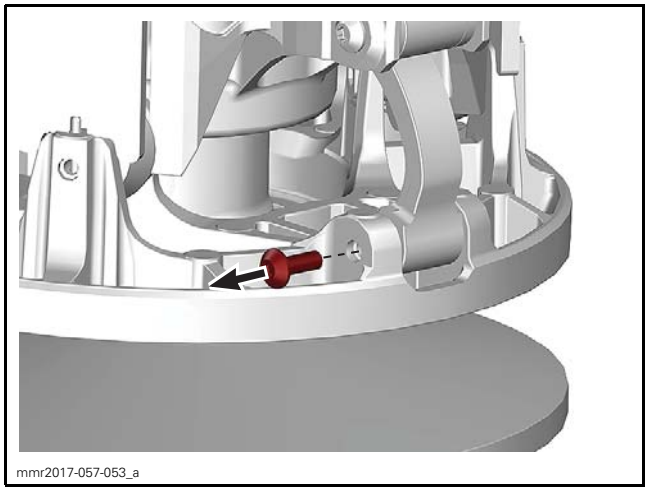
mmr2017-057-053_a

3. Remove the axle.

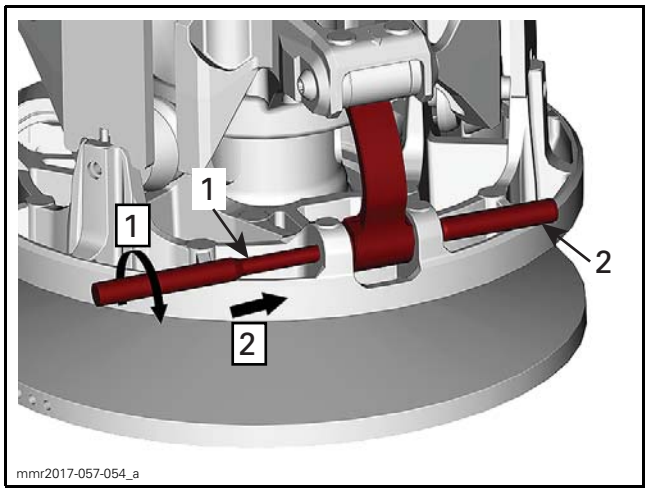

mmr2017-057-054_a

*1. Removing axle tool*
*2. Axle*

*Step 1: Screw the tool into the axle*
*Step 2: Push axle to the right side*

4. Remove ramp assembly.

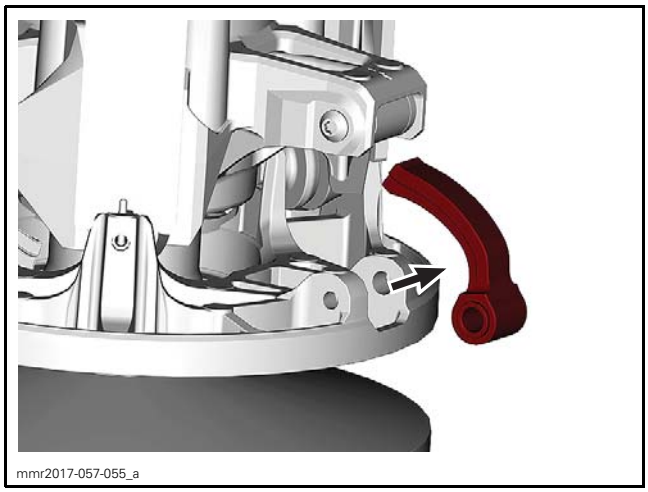
mmr2017-057-055_a

Removing the Torque Sliders (if equipped)

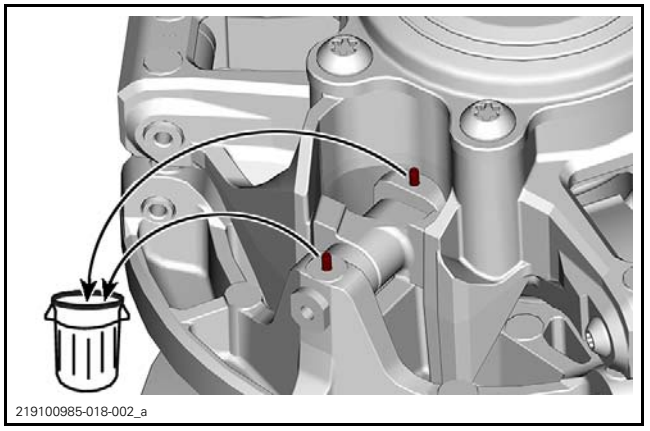
219100985-018-002_a

| REQUIRED TOOL |
| --- |
| Blind hole puller |
| M5 x 0.8 adaptor |

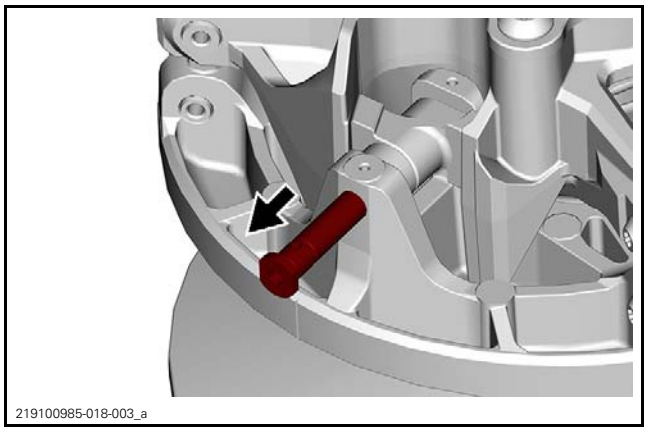
219100985-018-003_a

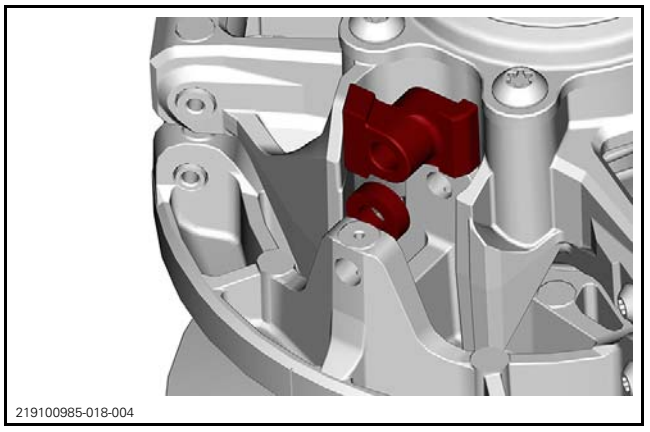
219100985-018-004

Removing the Torque Rollers (if equipped)

Refer to *REMOVING THE TORQUE SLIDERS* procedure.

### Replacing the Sliding Sheave Bushing

In case of worn out bushing, it is advisable to replace whole sliding sheave assembly as replacing just the bushing may reduce drive pulley performance.

## Cleaning the Drive Pulley

NOTE: Parts must be at room temperature before cleaning.

Clean pulley sheaves and shaft with fine steel wool and dry cloth.

Using a paper towel and cleaner, clean the following components.

– Crankshaft tapered end
– Taper inside fixed sheave of drive pulley
– Crankshaft threads
– Retaining screw threads.

| SERVICE PRODUCT |
| --- |
| CLUTCH AND PULLEY FLANGE CLEANER PRO S1 (P/N 779244) |

**NOTICE** Avoid contact between cleaner and crankshaft seal because damage may occur.

Remove all hardened oil deposits that are baked on crankshaft and pulley tapered surfaces with coarse or medium steel wool and/or sand paper no. 600.

**NOTICE** Do not use any other type of abrasive.

Reclean mounting surfaces with paper towel and cleaning solvent.

Wipe off the mounting surfaces with a clean, dry paper towel.

**NOTICE** Mounting surfaces must be free of any oil, cleaner or towel residue.

## Assembling the Drive Pulley

### Sliders

Position sliders as illustrated.

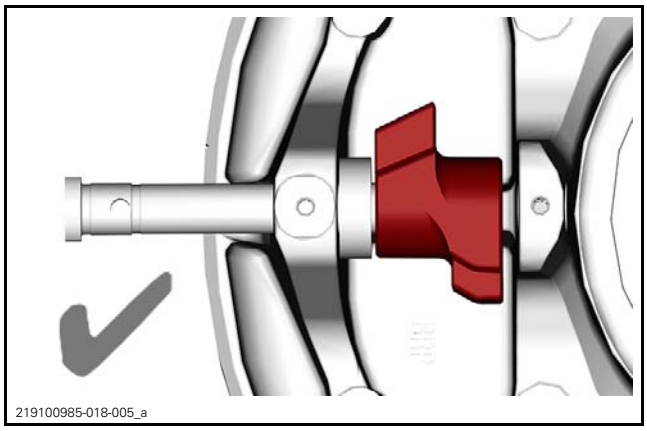


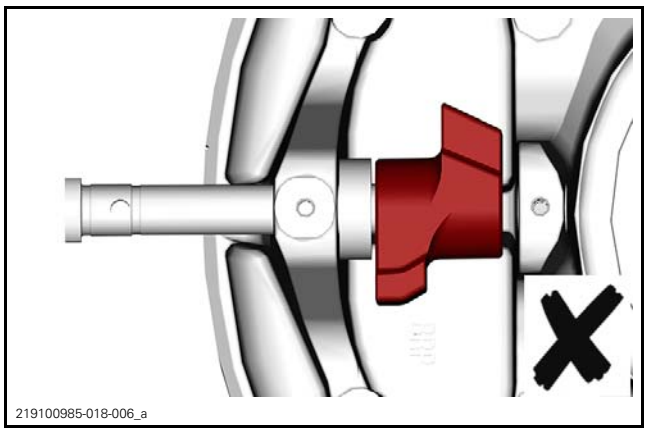


Position the flat sides of the axle head vertically.

Use a C vise clamp to push the axle back in place.

Install a new spring pin.

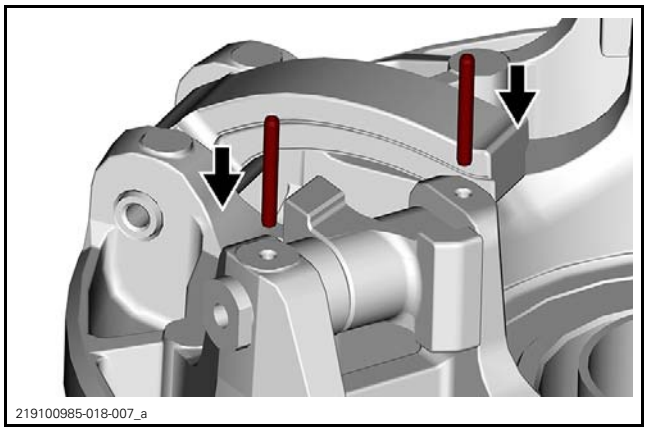


### Torque Rollers

Position sliders as illustrated.

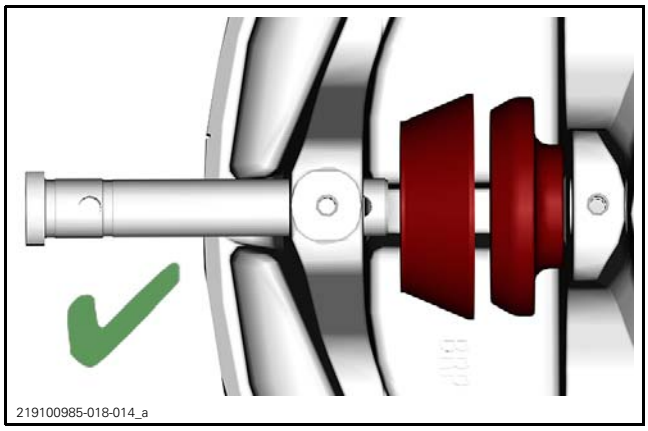


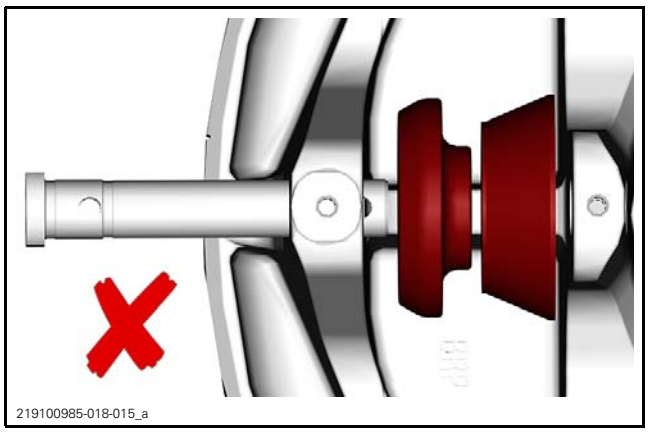


Position the flat sides of the axle head vertically.

Use a C vise clamp to push the axle back in place.

Install a new spring pin.

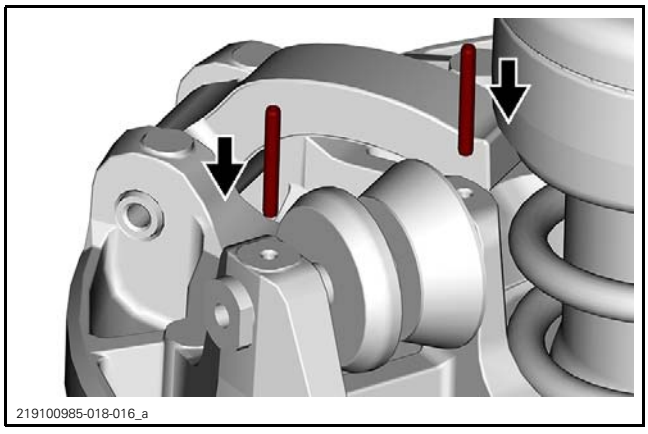


### Ramp

Install the ramp on the sliding sheave.

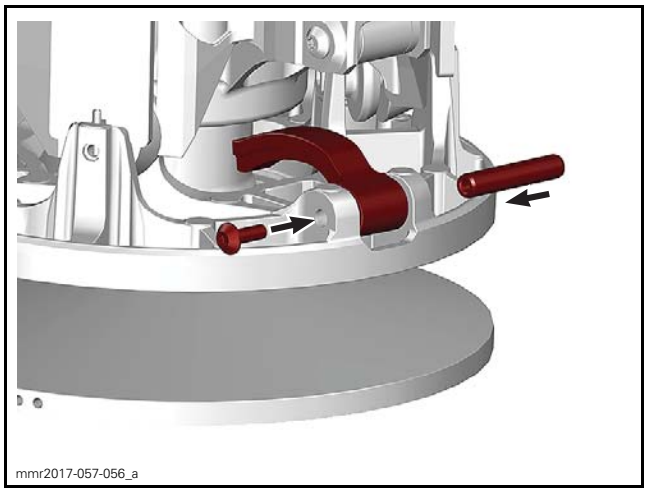


| TIGHTENING TORQUE | |
|---|---|
| Axle screw | 5 N•m ± 0.5 N•m (44 lbf•**in** ± 4 lbf•**in**) |

### Roller

Lubricate the roller bearing.

| REQUIRED SERVICE PRODUCT |
|---|
| ISOFLEX GREASE TOPAS NB 52 (P/N 293 550 021) |

| REQUIRED TOOL | |
|---|---|
| GREASE INJECTOR (P/N 529 036 376) |  |

**NOTE:** A threaded end is required on the grease gun for using the grease injector.

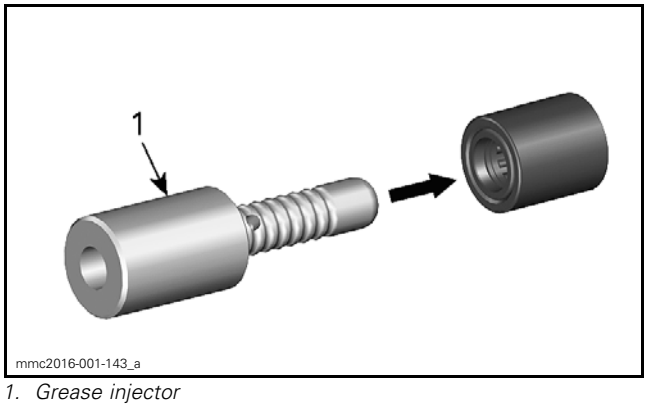


*1. Grease injector*

Install roller.

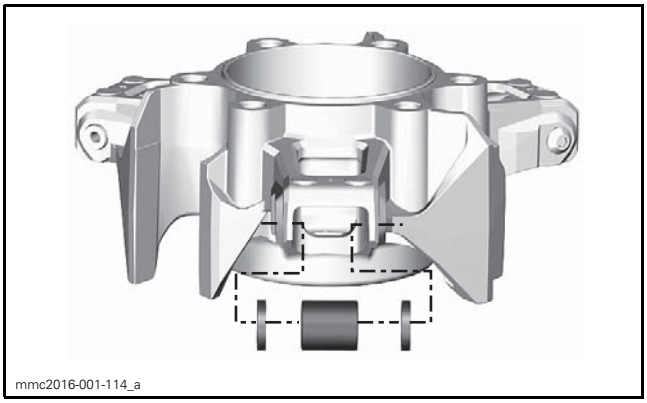
mmc2016-001-114_a

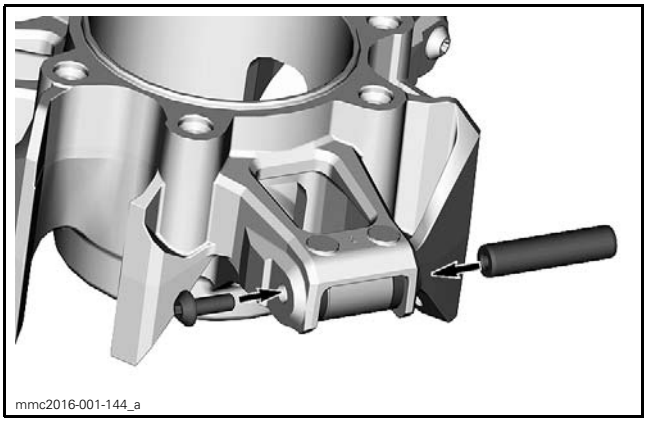
mmc2016-001-144_a

| TIGHTENING TORQUE | |
|---|---|
| Roller axle screw | 5 N•m ± 0.5 N•m (44 lbf•**in** ± 4 lbf•**in**) |

## Spider

Install the spider on the sliding sheave by aligning the indexing marks.

– Spider - the arrow on the arms #1, just above the roller.
– Sliding sheave - the dot on the external side of the sheave.

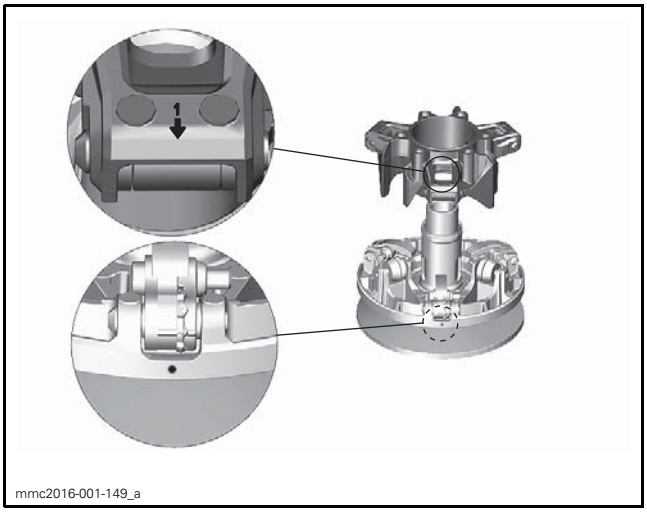

mmc2016-001-149_a

*TYPICAL*

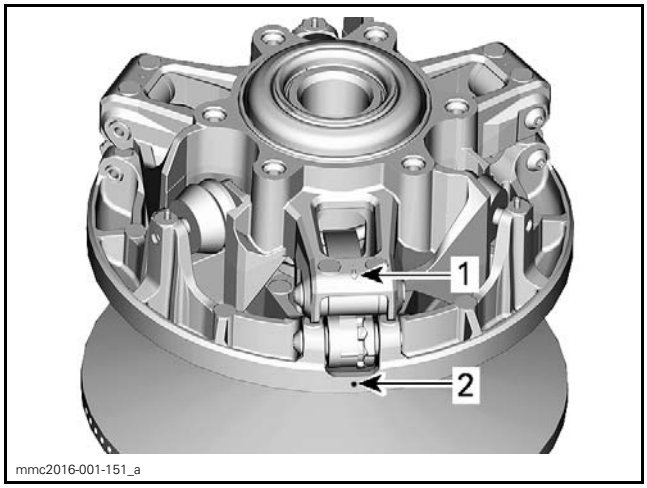

mmc2016-001-151_a

*TYPICAL - FINAL POSITION*
*1. Arrow - spider arm*
*2. Dot - sliding sheave*

### *With Sliders*

**NOTICE** During installation of the spider, make sure to correctly position all three sliders with spider legs and ensure that ramps are positioned inside the openings of the spider.

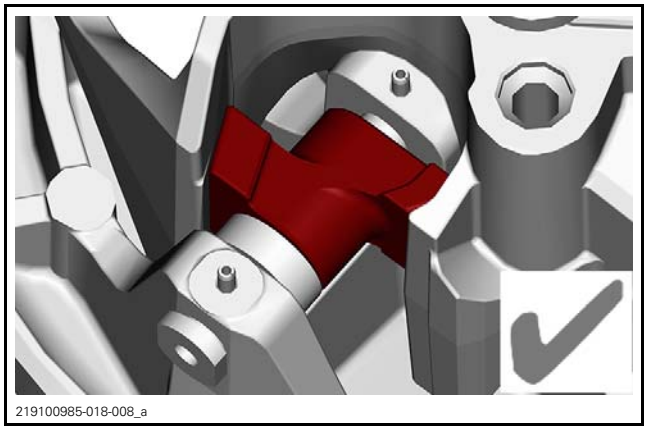
219100985-018-008_a

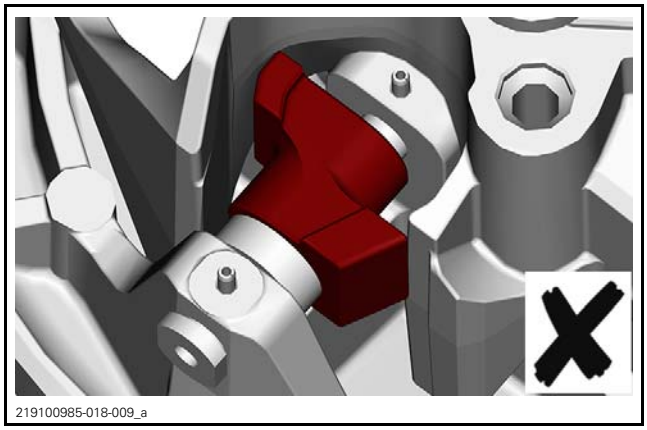
219100985-018-009_a

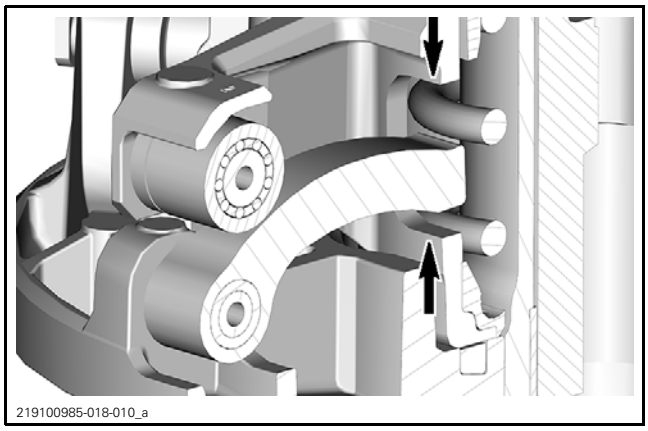


*RAMP POSITIONING*

### *With Torque Rollers*

**NOTICE** During installation of the spider, make sure to position the three spurs of spider legs between torque rollers and ensure that ramps are positioned inside the openings of the spider.

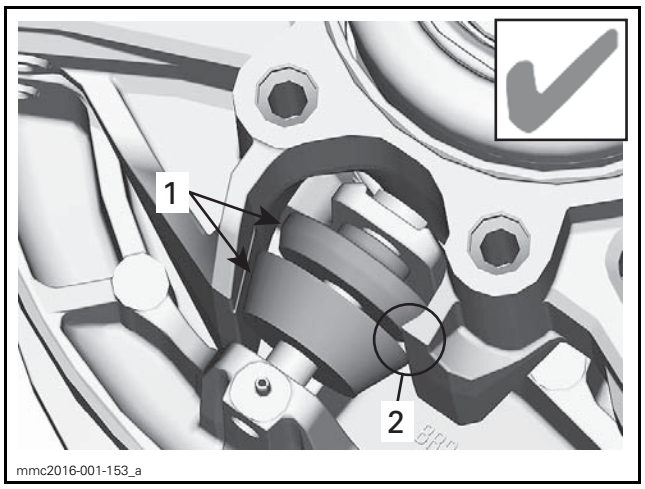


*ROLLER - GOOD INSTALLATION*
1. *Torque rollers*
2. *Spur of the spider leg*

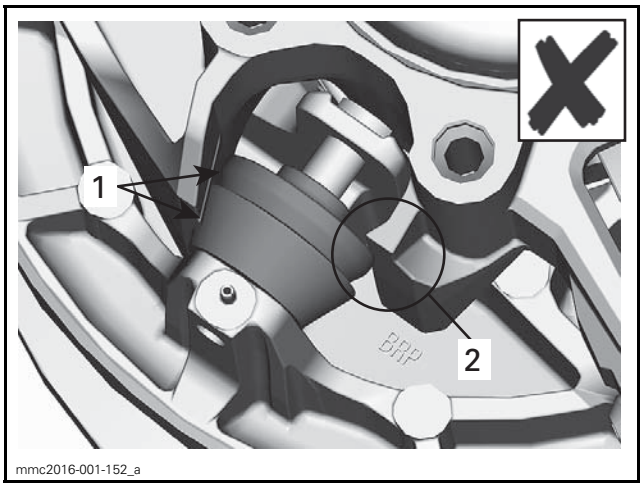


*ROLLER - WRONG INSTALLATION*
1. *Torque rollers*
2. *Spur of the spider leg*

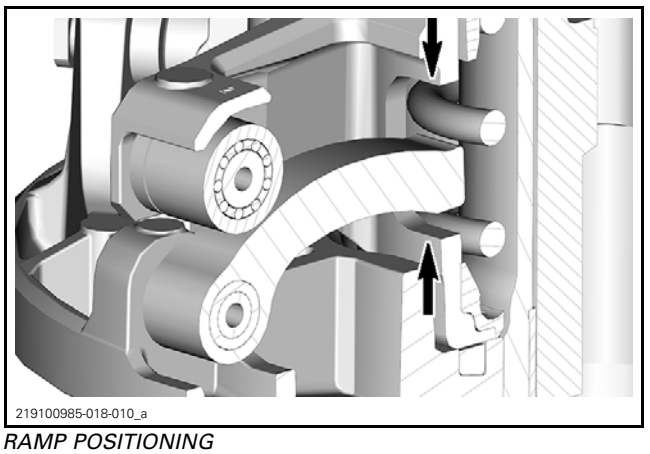


*RAMP POSITIONING*

### Damper

Install the damper using the following sequence.

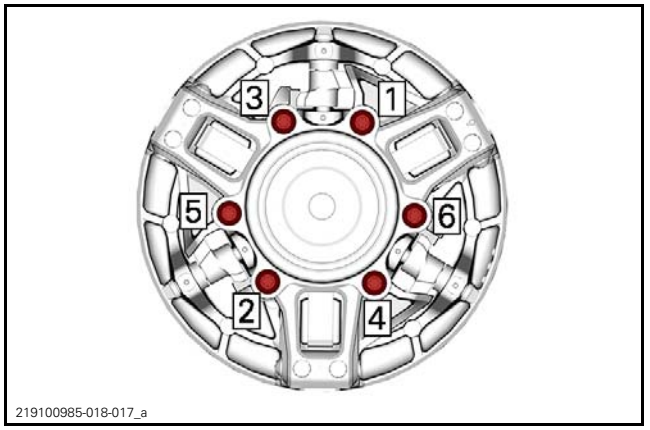


| TIGHTENING TORQUE | |
|---|---|
| Damper screws | 31.5 N•m ± 3.5 N•m (23 lbf•ft ± 3 lbf•ft) |

### Sliding Sheave and Fixed Sheave Assembly

Index sliding sheave with fixed sheave by aligning index marks.

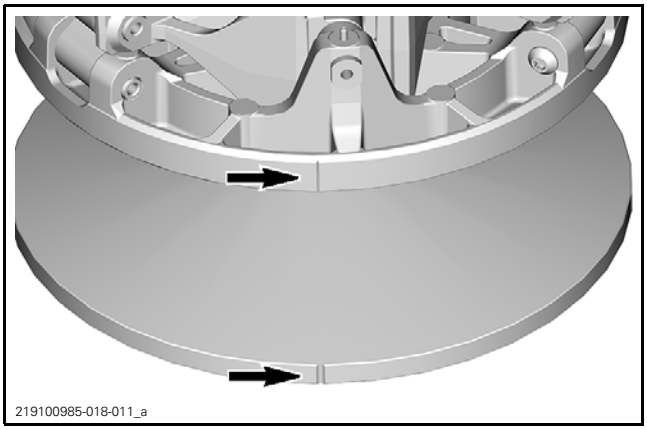


## Drive Pulley Installation

| REQUIRED TOOLS | |
|---|---|
| CLUTCH HOLDER (P/N 529 036 369) |  |

1. Clean mounting surfaces as described in *DRIVE PULLEY CLEANING* above.

**NOTICE** Do not apply antiseize or any lubricant on crankshaft and drive pulley tapers.

2. Install drive pulley on crankshaft end.

NOTE: The drive pulley can be installed in one position only. Drive pulley and crankshaft are indexed.

3. Install a NEW conical spring washer with its concave side towards drive pulley.
4. Install drive pulley bolt.

**NOTICE** Always use BRP genuine parts for conical spring washer and bolt.

5. Secure the drive pulley with the clutch holder.
6. Using a torque wrench, tighten the drive pulley bolt. Refer to *TIGHTENING THE DRIVE PULLEY* for the completed procedure.

### Tightening the Drive Pulley

Tighten the drive pulley bolt.

| TIGHTENING TORQUE | | |
|---|---|---|
| Drive pulley bolt | First torque | 120 N•m ± 5 N•m (89 lbf•ft ± 4 lbf•ft) |

Before starting engine, perform drive pulley adjustment. Refer to *ADJUSTMENT*, at the beginning of this subsection.

Install drive belt and guard.

Raise the rear of the vehicle and support it with a mechanical stand.

**⚠ WARNING**

**Ensure that the track is free of particles which could be thrown out while track is rotating. Keep hands, tools, feet and clothing clear of track. Ensure nobody is standing near the vehicle.**

Accelerate the vehicle at low speed (maximum 32 km/h (20 MPH) and apply the brake, repeat 5 times.

Tighten the drive pulley bolt again.

| TIGHTENING TORQUE | | |
|---|---|---|
| Drive pulley bolt | Final torque | 120 N•m ± 5 N•m (89 lbf•ft ± 4 lbf•ft) |

**⚠ WARNING**

**After 10 hours of operation the transmission system of the vehicle must be inspected to ensure drive pulley bolt is still properly torqued.**

# DRIVE PULLEY (600 ACE)

## SERVICE TOOLS

| Description | Part Number | Page |
|---|---|---|
| CLUTCH HOLDER | 529 036 235 | 366, 374 |
| DRIVE PULLEY PULLER | 529 000 064 | 366 |
| PULLEY SPRING COMPRESSOR TOOL | 529 036 012 | 368 |

## SERVICE PRODUCTS

| Description | Part Number | Page |
|---|---|---|
| CLUTCH AND PULLEY FLANGE CLEANER PRO S1 | 779244 | 369 |

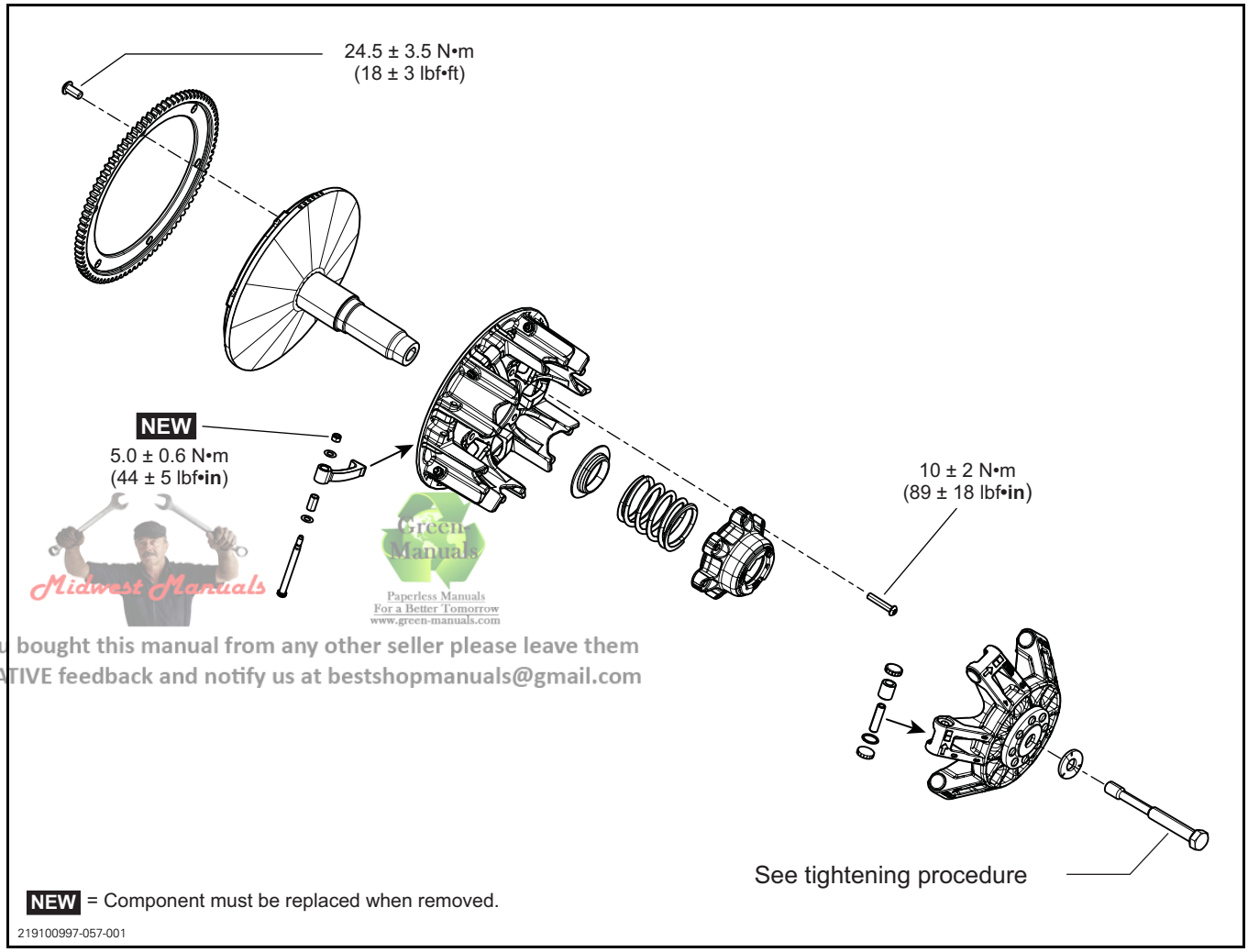


Midwest Manuals
Green Manuals
Paperless Manuals
For a Better Tomorrow
www.green-manuals.com
If you bought this manual from any other seller please leave them
NEGATIVE feedback and notify us at bestshopmanuals@gmail.com

# GENERAL

This drive pulley is lubrication free. Never lubricate any components.

Some drive pulley calibration components (spring, ramps) can be changed to adapt to different altitudes. Refer to appropriate Service Bulletin.

**⚠ WARNING**

**Any drive pulley repairs must be performed by an authorized Ski-Doo dealer. Subcomponent installation and assembly tolerances require strict adherence to procedures detailed.**

**⚠ WARNING**

**The clutch assembly is a precisely balanced unit. Never replace parts with used parts from another clutch assembly.**

# TROUBLESHOOTING

## ERRATIC DRIVE PULLEY PERFORMANCE

1. Damaged slider shoe O-ring.
   - *Install new O-rings, refer to DRIVE PULLEY ASSEMBLY.*
2. Missing slider shoe O-ring.
   - *Install new O-rings, refer to DRIVE PULLEY ASSEMBLY.*
3. Excessive wear on slider shoes.
   - *Inspect slider shoes, refer to DRIVE PULLEY INSPECTION.*

# PROCEDURES

## DRIVE PULLEY

### Drive Pulley Removal

1. Remove drive belt. Refer to *DRIVE BELT* subsection.
2. Remove the drive pulley from engine as follows.
   2.1 Hold the drive pulley.

| REQUIRED TOOL | |
|---|---|
| CLUTCH HOLDER (P/N 529 036 235) |  |

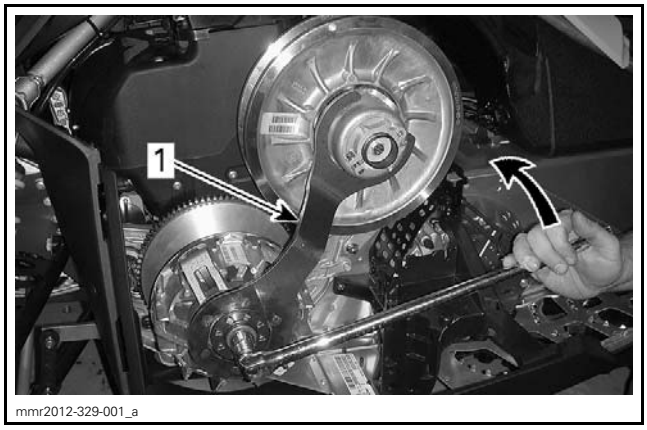


mmr2012-329-001_a

*1. Clutch holder*

   2.2 Remove the drive pulley screw.

**NOTICE** Never use any type of impact wrench for drive pulley removal.

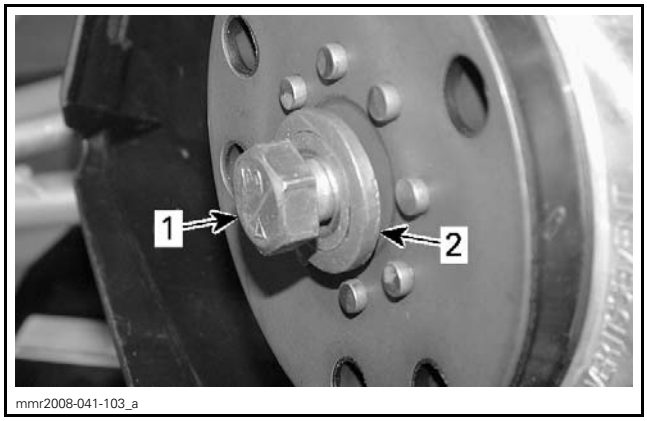


mmr2008-041-103_a

*TYPICAL*
*1. Drive pulley retaining screw*
*2. Conical spring washer*

   2.3 Remove the drive pulley from crankshaft.

| REQUIRED TOOL | |
|---|---|
| DRIVE PULLEY PULLER (P/N 529 000 064) |  |

**NOTICE** Always use the specified tool to avoid damaging crankshaft.

### Drive Pulley Disassembly

#### Fixed Sheave Removal

Separate fixed sheave from sliding sheave as follows:

– Screw puller into fixed sheave shaft (about 13 mm (1/2 in).
– Hold drive pulley in your hand by the sliding sheave as illustrated.
– Tap on puller head to disengage fixed sheave.

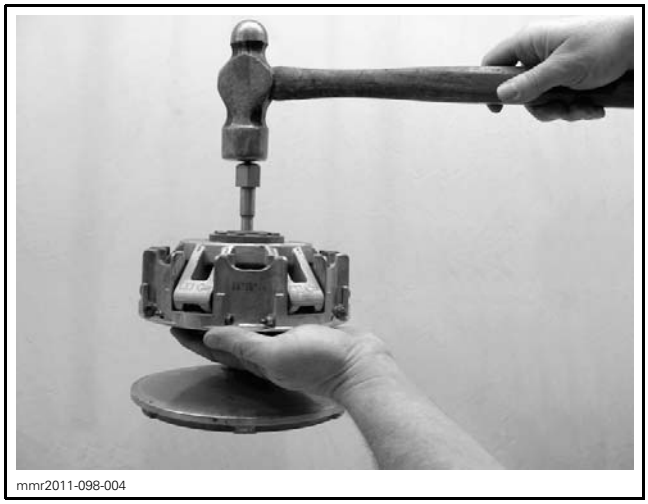
mmr2011-098-004

NOTE: If necessary, use a heat gun to slightly heat the governor cup to ease disassembly.

**NOTICE** Never use any type of torch to heat governor cup.

### Governor Cup Removal

Carefully pull up on governor cup until the slider shoes are at their highest position in the guides.

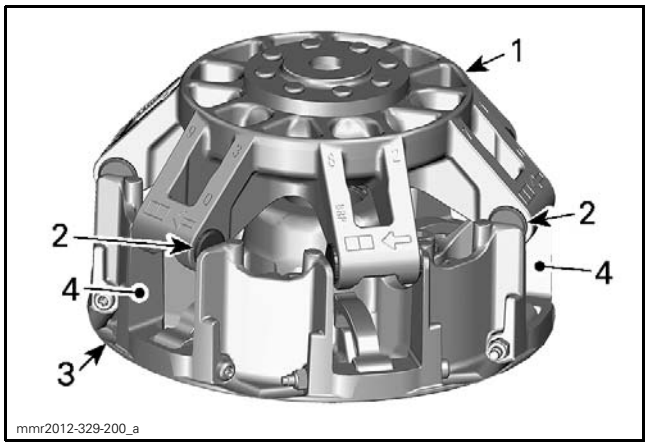

mmr2012-329-200_a

*1. Governor cup*
*2. Slider shoes*
*3. Sliding sheave*
*4. Guides*

### Slider Shoes and Roller Removal

1. Remove slider shoes from governor cup using a flat screwdriver.

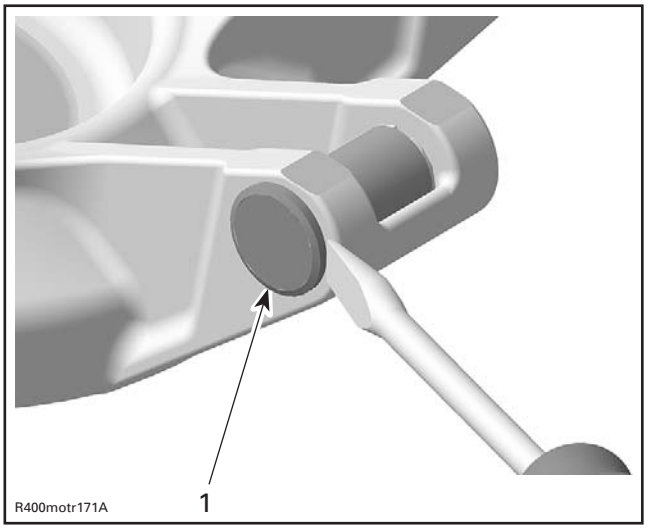

R400motr171A

*1. Slider shoe*

2. Remove O-ring from slider shoes.

NOTE: The O-rings are positioned on the slider shoes identified by an O on the governor cup. (total of 3 slider shoes with O-rings).

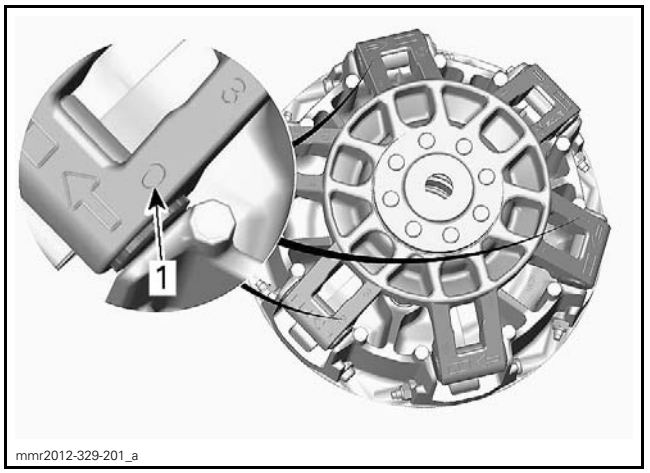

mmr2012-329-201_a

*O-RING POSITION*
*1. O on governor cup*

3. Place governor cup **on** a vice using protection plates.
4. Remove bearing sleeve using a punch by pushing it towards the opposite direction of the arrow.

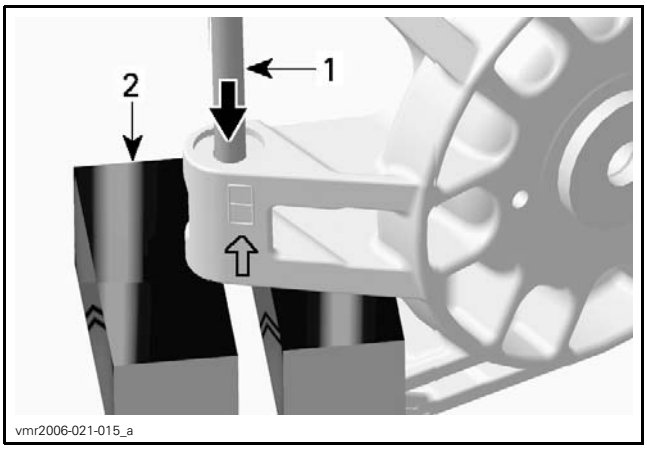


*1. Punch*
*2. Vice*

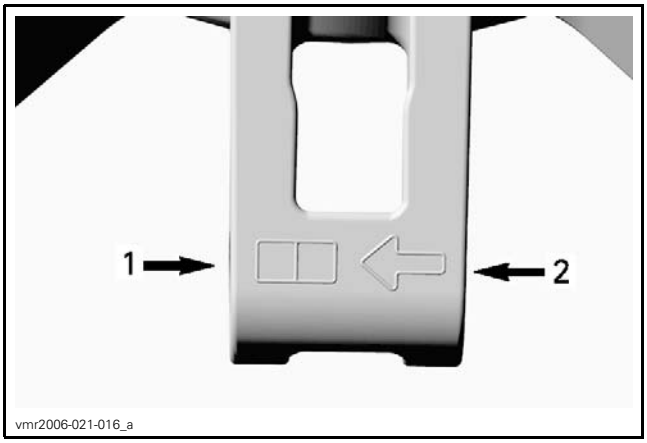


*1. Removal direction*
*2. Assembly direction*

***NOTICE*** Do not clamp governor cup **in** the vice to avoid damaging it.

### Centrifugal Lever Removal

1. Unscrew lock nut and remove centrifugal lever pivot bolt.
2. Remove centrifugal lever and both thrust washers.

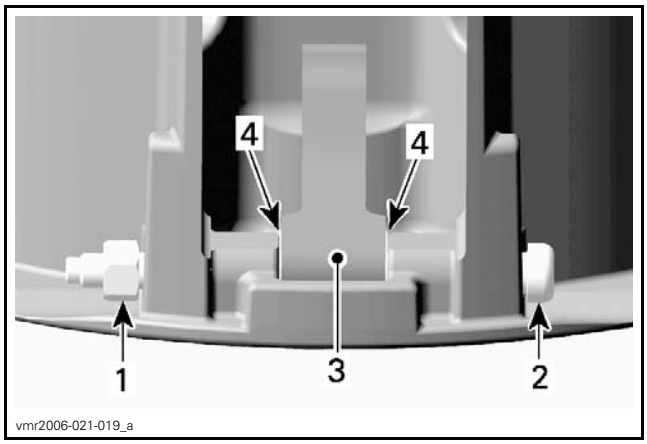


*1. Lock nut*
*2. Centrifugal lever pivot bolt*
*3. Centrifugal lever*
*4. Thrust washers*

### Spring Cover Removal

**⚠ WARNING**

**The spring cover is under high clutch spring preload. Never attempt to remove the spring cover without the recommended tool.**

| REQUIRED TOOL | |
|---|---|
| PULLEY SPRING COMPRESSOR TOOL (P/N 529 036 012) |  |

1. Install tool in a vice with the sliding sheave between the washers.

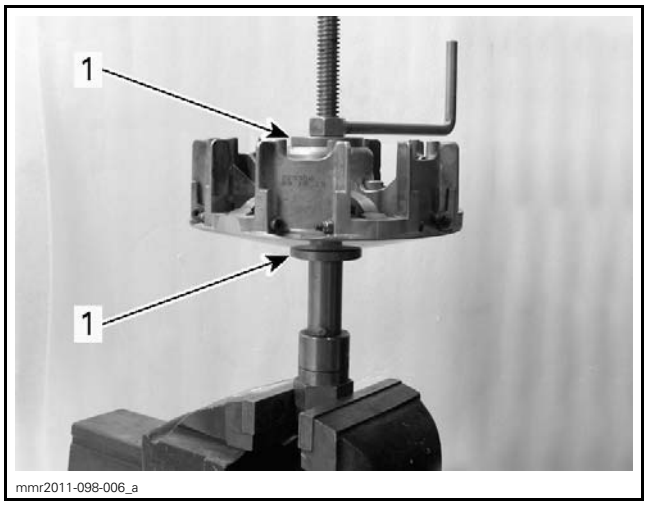


*1. Washers*

2. Remove retaining screws from spring cover.

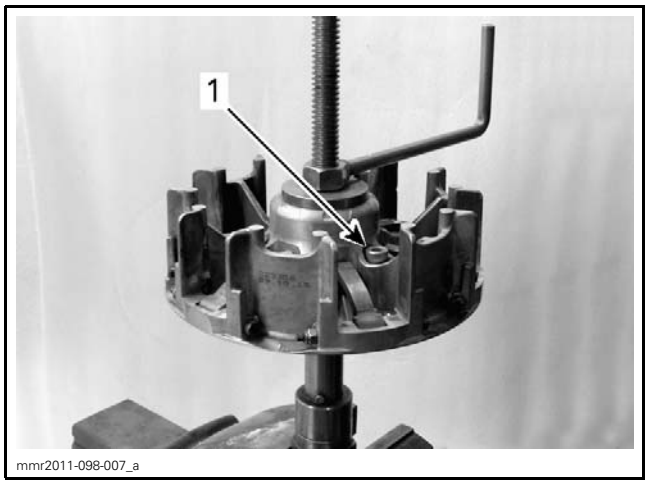


*1. Retaining screw*

3. Unscrew tool to disengage spring cover from sliding sheave.

## Drive Pulley Cleaning

**NOTICE** **Always use the specified cleaning solvent and abrasive type to avoid damaging components.**

Clean pulley faces and shaft using fine steel wool and dry cloth.

Clean the following components using a paper towel with CLUTCH AND PULLEY FLANGE CLEANER PRO S1 (P/N 779244).

– Crankshaft tapered end
– Crankshaft threads
– Fixed sheave shaft
– Inside the fixed sheave taper
– Drive pulley screw threads.

**NOTICE** **Avoid contact between cleaner and crankshaft seal.**

If additional cleaning is required on tapered surfaces, use a medium or coarse steel wool or a no. 600 sand paper.

Reclean tapered surfaces with paper towel and CLUTCH AND PULLEY FLANGE CLEANER PRO S1 (P/N 779244).

**NOTICE** **Tapered surfaces must be free of any foreign particles.**

## Drive Pulley Inspection

NOTE: Unless otherwise noted, during inspection, replace any component found defective or out of specifications.

### Fixed Sheave Inspection

Check fixed sheave shaft and surface for scratches or other damage.

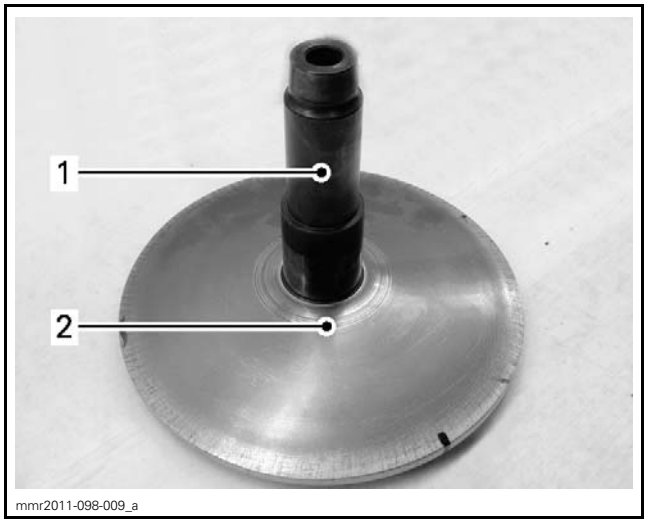


*1. Fixed sheave shaft*
*2. Fixed sheave surface*

### Governor Cup Inspection

Check governor cup for cracks or other visible damage.

### Slider Shoes and Roller Inspection

Check if O-rings of slider shoes are cracked, cut or crushed.

Check slider shoes for visible wear.

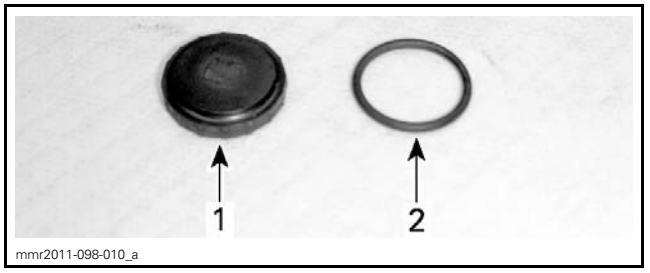


*1. Slider shoe*
*2. O-ring*

Measure the thickness of the slider shoes.

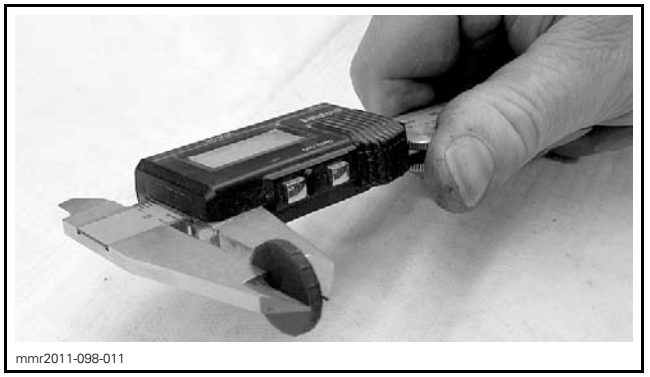

NOTE: Take measurement at the center of slider shoe.

| SLIDER SHOE SERVICE LIMIT | |
|---|---|
| With O-ring | 3.70 mm (.146 in) |
| Without O-ring | 3.80 mm (.15 in) |

Check each roller for roundness of external diameter.

Check if rollers move freely.

***NOTICE*** **Whenever replacing rollers and slider shoes, always replace all rollers and slider shoes at the same time.**

### Centrifugal Lever Inspection

Check contact surfaces of centrifugal lever for visible wear.

If major wear is visible, replace the following:
- Centrifugal levers
- Thrust washers
- Centrifugal lever pivot bolts
- Centrifugal lever pivot lock nuts.

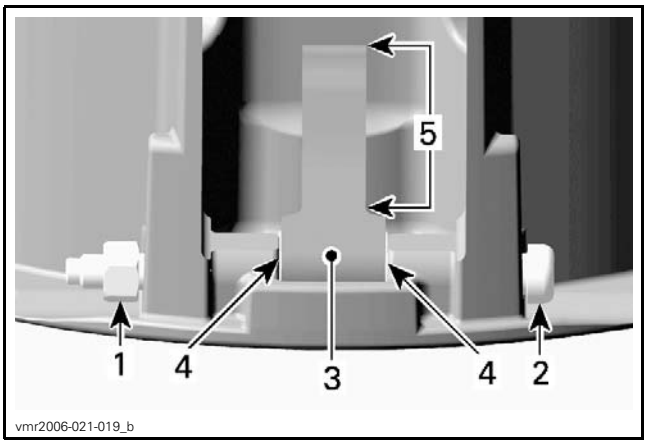


*1. Lock nut*
*2. Centrifugal lever pivot bolt*
*3. Centrifugal lever*
*4. Thrust washers*
*5. Contact surface to the roller*

**⚠ WARNING**

**Whenever replacing centrifugal levers, always replace all levers at the same time. Otherwise, drive pulley imbalance will occur.**

Measure diameter of centrifugal lever pivot bolt.

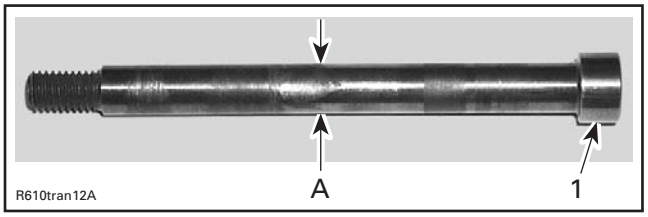


*1. Centrifugal lever pivot bolt*
*A. Measure diameter here*

| CENTRIFUGAL LEVER PIVOT BOLT | |
|---|---|
| **SPECIFICATION** | **DIAMETER** |
| NOMINAL | 6.063 mm to 6.091 mm (.239 in to .24 in) |
| SERVICE LIMIT | 6.00 mm (.236 in) |

Measure diameter of centrifugal lever bushing.

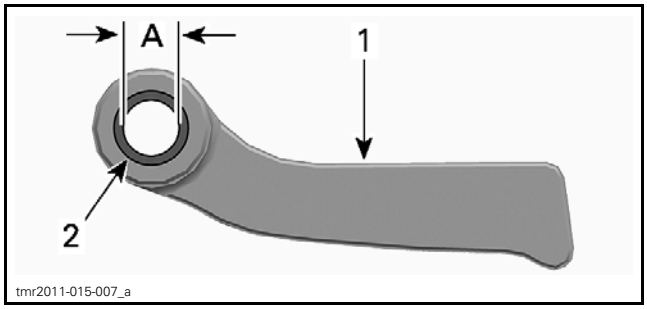


*1. Centrifugal lever*
*2. Bushing*
*A. Bushing inner diameter*

| CENTRIFUGAL LEVER BUSHING | |
|---|---|
| **SPECIFICATION** | **INNER DIAMETER** |
| NOMINAL | 6.00 mm to 6.12 mm (.236 in to .241 in) |
| SERVICE LIMIT | 6.200 mm (.244 in) |

### Spring Cover Inspection

Check spring cover for cracks or wear.

Check coating of spring cover bushing for wear.

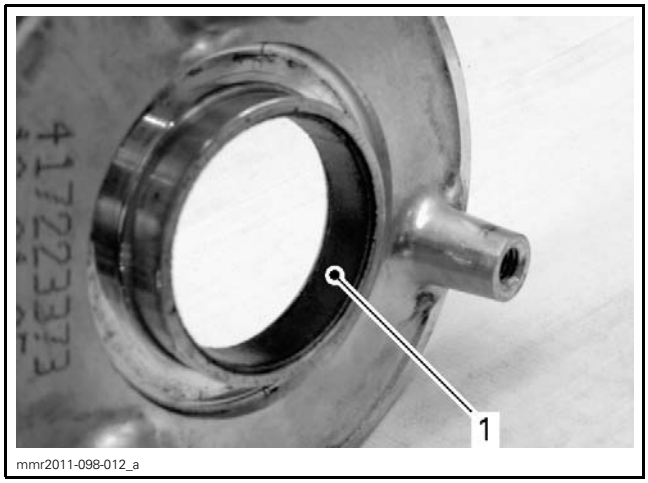

mmr2011-098-012_a

*1. Coating of spring cover bushing*

Using a bore gauge, measure the inner diameter of spring cover bushing.

NOTE: Measuring point must be at least 6 mm (1/4 in) from bushing edge.

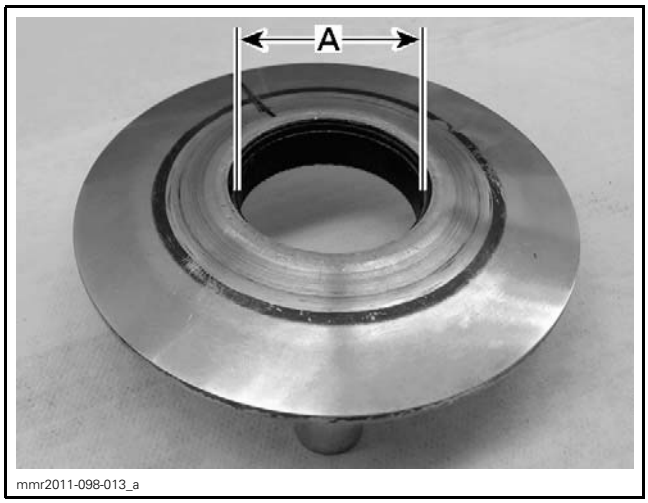

mmr2011-098-013_a

*A. Inner diameter of spring cover bushing*

| SPRING COVER BUSHING | |
|---|---|
| **SPECIFICATION** | **INNER DIAMETER** |
| SERVICE LIMIT | 38.37 mm (1.511 in) |

If bushing is out of specification, replace spring cover.

### Spring Inspection

Check spring free length.

| SPRING FREE LENGTH | |
|---|---|
| COLOR CODE | FREE LENGTH |
| RED/WHITE | 115.0 mm (4.528 in) |

### Sliding Sheave Inspection

Check sliding sheave for cracks or other damage.

Check sliding contact surface for excessive wear.

Measure centrifugal lever pivot bolt bores.

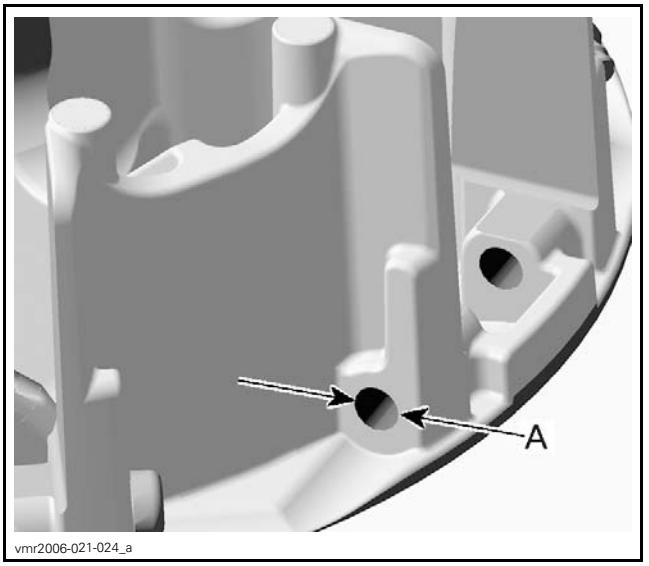

vmr2006-021-024_a

*A. Centrifugal lever pivot bolt bore diameter*

| CENTRIFUGAL LEVER PIVOT BOLT | |
|---|---|
| **SPECIFICATION** | **BORE DIAMETER** |
| NOMINAL | 6.113 mm to 6.171 mm (.241 in to .243 in) |
| SERVICE LIMIT | 6.300 mm (.248 in) |

Check coating of sliding sheave bushing for wear.

Measure bushing diameter of sliding sheave.

NOTE: Use a dial bore gauge to measure bushing diameter. Measuring point must be at least 5 mm (1/4 in) from bushing edge.

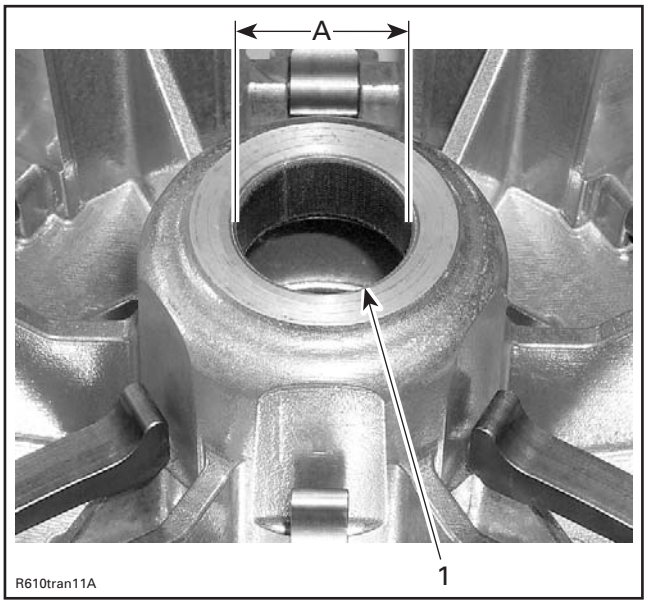


*TYPICAL*
*1. Sliding sheave bushing*
*A. Inner diameter of bushing*

| SLIDING SHEAVE BUSHING | |
|---|---|
| **SPECIFICATION** | **INNER DIAMETER** |
| NOMINAL | 32.01 mm to 32.13 mm (1.26 in to 1.265 in) |
| SERVICE LIMIT | 33.22 mm (1.308 in) |

If bushing is out of specification, replace sliding sheave.

## Drive Pulley Assembly

### Spring Cover Installation

The installation is the reverse of removal procedure, however pay attention to the following.

Tighten spring cover retaining screws to specification.

| TIGHTENING TORQUE | |
|---|---|
| Spring cover retaining screws | 10 N•m ± 2 N•m (89 lbf•**in** ± 18 lbf•**in**) |

### Centrifugal Lever Installation

The installation is the reverse of removal procedure, however pay attention to the following.

Install centrifugal levers with both thrust washers.

**NOTICE** Centrifugal levers must move easily after installation.

Tighten centrifugal lever pivot nuts to specification.

| TIGHTENING TORQUE | |
|---|---|
| Centrifugal lever pivot nut | 5 N•m ± 0.6 N•m (44 lbf•**in** ± 5 lbf•**in**) |

### Slider Shoes and Roller Installation

The installation is the reverse of removal procedure, however pay attention to the following.

Ensure that rollers move easily after installation.

Install bearing sleeve by pushing it towards the same direction as the arrow.

Ensure the bearing sleeve is aligned with the contact surface of the slider shoes (no protrusion).

**NOTICE** Do not clamp governor cup **in** the vice to avoid to damaging it.

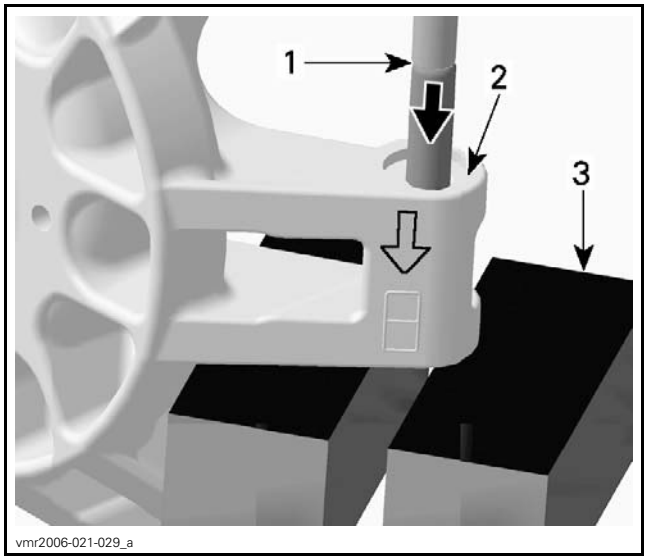


*1. Top edge of bearing sleeve*
*2. Contact surface of slider shoes*
*3. Vice*

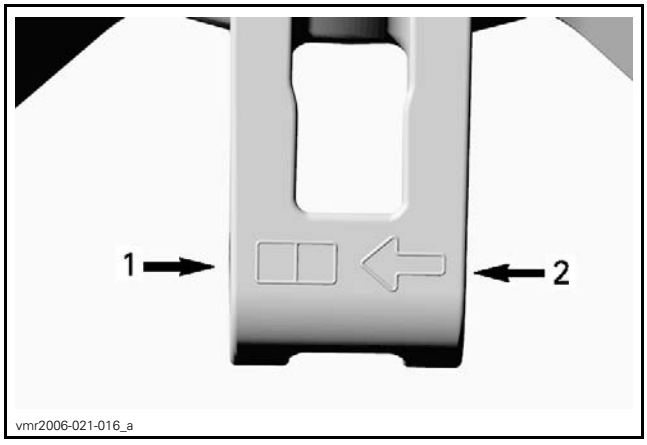


*1. Removal direction*
*2. Assembly direction*

Carefully mark governor cup box using a punch.

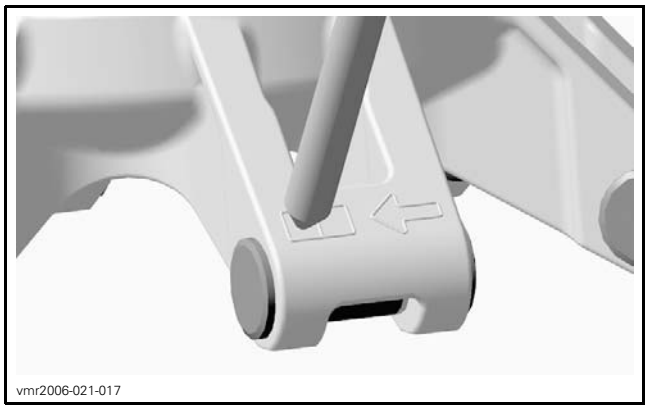
vmr2006-021-017

NOTE: Never install a governor cup with two marks.

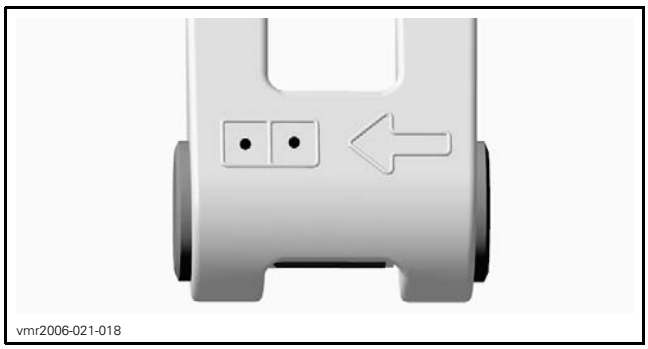
vmr2006-021-018

Install O-rings on slider shoes identified by an O on the governor cup. (total of 3 slider shoes with O-rings).

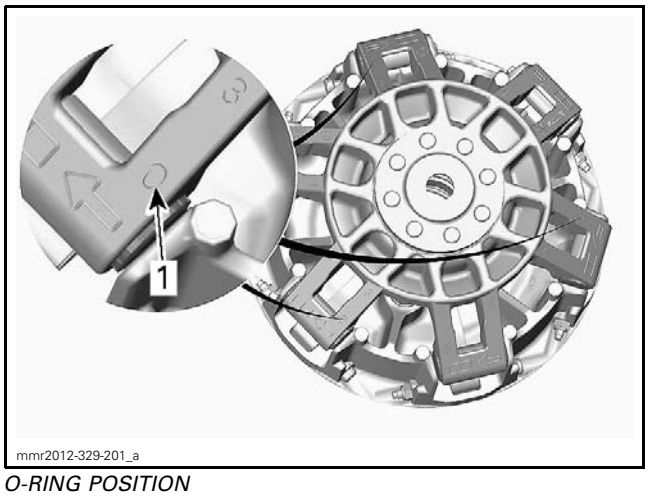

mmr2012-329-201_a

*O-RING POSITION*
*1. O on governor cup*

### Governor Cup Installation

The installation is the reverse of removal procedure.

### Fixed Sheave Assembly

The installation is the reverse of removal procedure, however pay attention to the following.

Align fixed sheave, sliding sheave and governor cup together using the index marks (index marks have been traced at the factory).

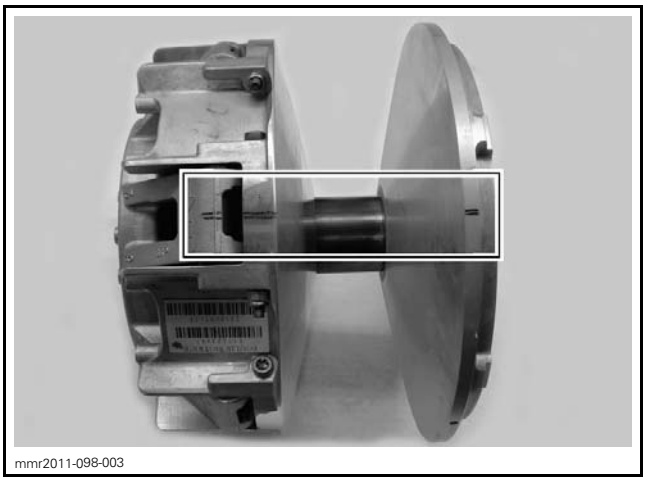
mmr2011-098-003

## Drive Pulley Installation

For installation, reverse the removal procedure. However, pay attention to the following.

Clean mounting surfaces as described in *DRIVE PULLEY CLEANING* above.

**NOTICE** **Do not apply antiseize or any lubricant on crankshaft and drive pulley tapers.**

Install NEW conical spring washer with its concave side towards drive pulley.

Install drive pulley screw with a NEW conical spring washer.

NOTE: Spring washer concave side must be towards drive pulley.

**NOTICE** **Always use BRP genuine parts for conical spring washer and screw.**

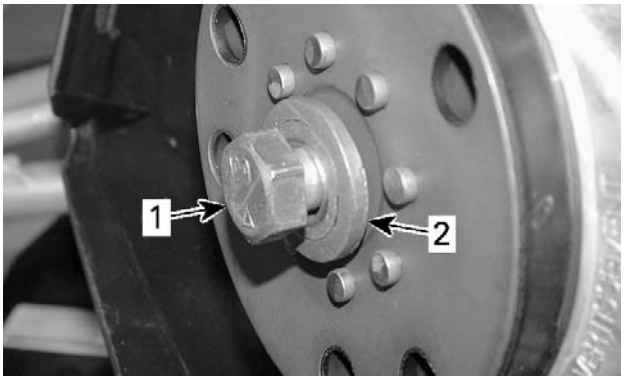


*TYPICAL*
1. *Drive pulley screw*
2. *Conical spring washer*

1. Tighten drive pulley retaining screw to specification.

***NOTICE*** Never use any type of impact wrench for drive pulley installation.

| REQUIRED TOOL |
|---|
| CLUTCH HOLDER (P/N 529 036 235) |

| DRIVE PULLEY FIRST TORQUE |
|---|
| 120 N•m (89 lbf•ft) |

2. Lift rear of vehicle and support it safely.

**⚠ WARNING**

**Ensure the track is free of particles which could be thrown out while track is rotating. Keep hands, tools, feet and clothing clear of track. Ensure nobody is standing near the vehicle.**

3. Start engine.
4. Release parking brake.
5. Accelerate vehicle at low speed (maximum 32 km/h (20 MPH)).
6. Apply brake.
7. Repeat the above sequence 5 times.
8. Stop engine.
9. Lower vehicle back on ground.
10. Retighten drive pulley retaining screw to specification.

| REQUIRED TOOL |
|---|
| CLUTCH HOLDER (P/N 529 036 235) |

| DRIVE PULLEY FINAL TORQUE |
|---|
| 120 N•m (89 lbf•ft) |

**⚠ WARNING**

**After 10 hours of operation, the torque of the drive pulley retaining screw must be checked.**

# DRIVE PULLEY (E-TEC)

## SERVICE TOOLS

| Description | Part Number | Page |
|---|---|---|
| CIRCLIP INSTALLER/REMOVER | 529 036 375 | 378–379 |
| CLUTCH HOLDER | 529 036 369 | 377, 386 |
| DRIVE PULLEY OPENING TOOL | 529 036 378 | 378, 382 |
| DRIVE PULLEY SUPPORT | 529 036 371 | 378–379, 381 |
| GREASE INJECTOR | 529 036 376 | 384 |
| PDRIVE PULLER | 529 036 370 | 377–378 |
| PULLEY SPRING COMPRESSOR TOOL | 529 036 373 | 378–379, 381–382 |
| REMOVING AXLE TOOL | 529 036 372 | 378, 380–382 |

## SERVICE PRODUCTS

| Description | Part Number | Page |
|---|---|---|
| CLUTCH AND PULLEY FLANGE CLEANER PRO S1 | 779244 | 383 |
| ISOFLEX GREASE TOPAS NB 52 | 293 550 021 | 384 |

## WITH CLICKER

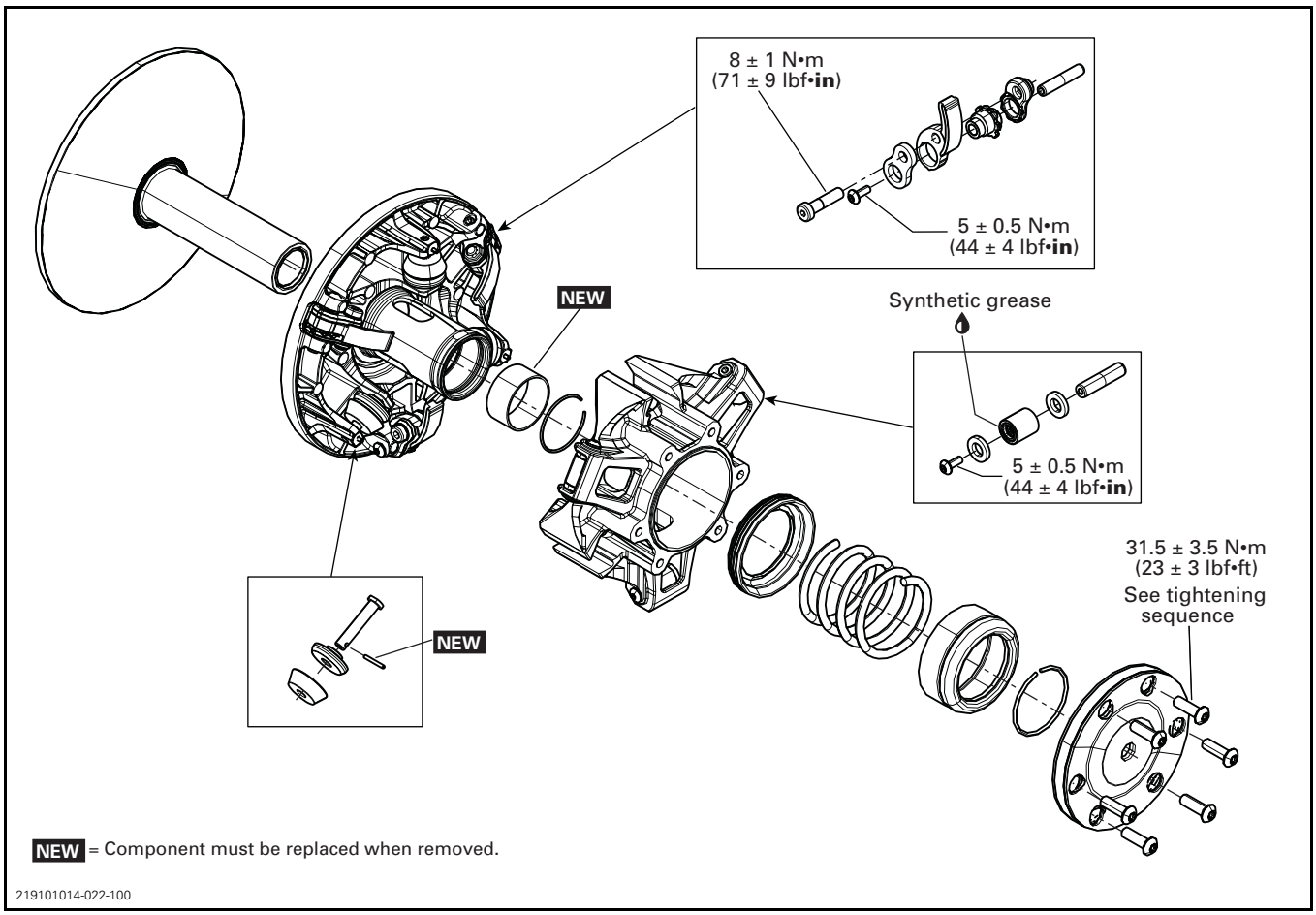

# GENERAL

The pDrive pulleys are lubrication-free drive pulleys. Only the needle bearings inside the rollers need to be lubricated when replaced.

Always refer to appropriate *PARTS CATALOG* for replacement parts.

**NOTICE** Never use any type of impact wrench for drive pulley removal and installation. The use of impact wrench could damage the drive pulley and modify the calibration.

Some drive pulley components (like the spring and ramps) can be changed to improve vehicle performance in high altitude regions. A Service Bulletin provides information about calibration according to altitude.

**NOTICE** Such modifications should only be performed by experienced mechanics since they can greatly affect vehicle performance. Verify spring specifications before installation. Do not only refer to the spring color code.

**⚠ WARNING**

Any drive pulley repairs must be performed by an authorized Ski-Doo dealer. Subcomponent installation and assembly tolerances require strict adherence to procedures detailed.

During assembly/installation, use torque values as in the exploded view.

Clean threads before applying a threadlocker. Refer to *SELF-LOCKING FASTENERS* and *LOCTITE APPLICATION* at the beginning of this manual for complete procedure.

**⚠ WARNING**

Torque wrench tightening specifications must be strictly adhered to.
Locking devices must be replaced with new ones when removed (e.g.: locking tabs, elastic stop nuts, cotter pins, etc.).

# ADJUSTMENT

The drive pulley is factory calibrated to transmit maximum engine power at a predefined RPM. Factors such as ambient temperature, altitude or surface condition may vary this critical engine RPM thus affecting snowmobile efficiency.

This adjustable drive pulley allows setting maximum engine RPM in the vehicle to maintain maximum power. The adjustment has an effect on high RPM only.

Ramp cam should be adjusted so that actual maximum engine RPM in vehicle matches the maximum horsepower RPM given in *TECHNICAL SPECIFICATIONS*.

To adjust, modify ramp end position by turning ramp cams (3x).

The ramp and the right lever have a notch while ramp cam has 5 positions numbered 1 to 5.

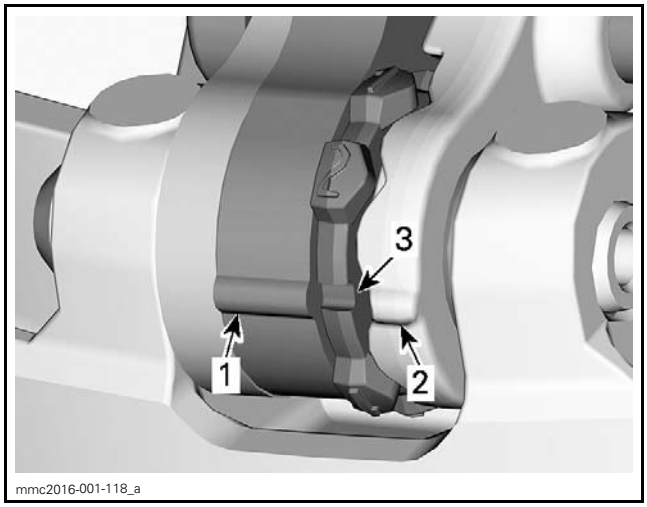


*1. Ramp notch*
*2. Right lever notch*
*3. Cam position (here #3)*

Each number modifies maximum engine RPM by about 200 RPM.

Lower numbers decrease engine RPM in steps of 200 RPM and higher numbers increase it in steps of 200 RPM.

For example: If ramp cam is set at position 3 and is changed to position 5, the maximum engine RPM is increased by about 400 RPM.

## MODIFYING THE RAMP CAM SETTING

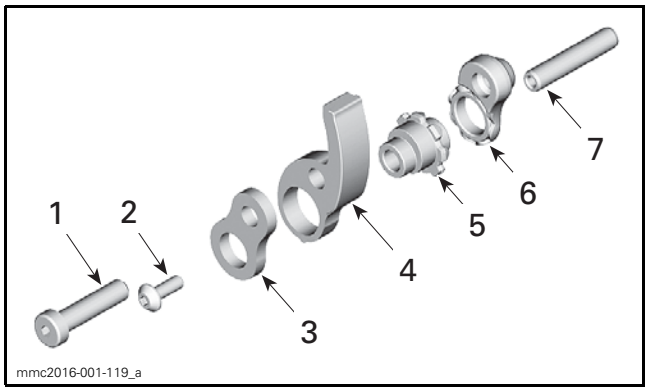


1. *Pivot*
2. *Axle retaining screw*
3. *Left lever*
4. *Ramp*
5. *Cam*
6. *Right lever*
7. *Axle*

1. Loosen the pivot.

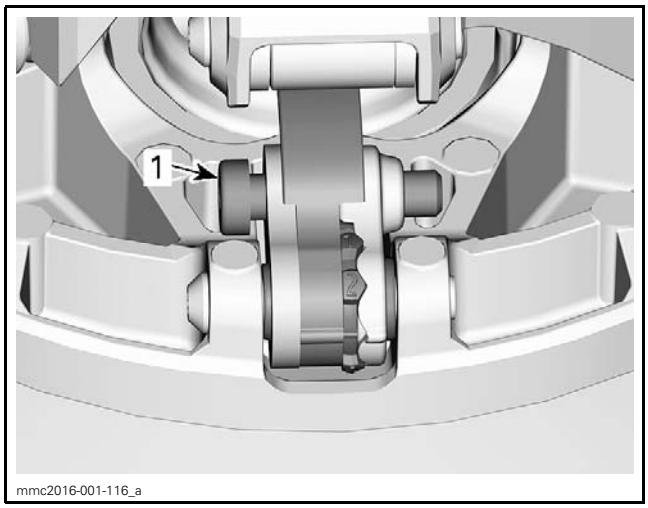


1. *Pivot*

2. Move right lever aside to be able to turn the cam.
3. Turn cam to the desired position.

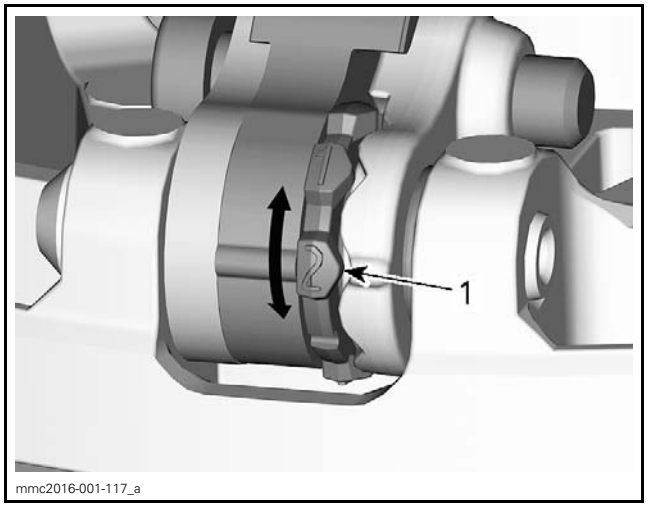


1. *Desired cam position (here #2)*

| TIGHTENING TORQUE | |
|---|---|
| Pivot | 8 N•m ± 1 N•m (71 lbf•**in** ± 9 lbf•**in**) |

For factory setting, refer to *SPECIFICATIONS (VEHICLE)*.

**NOTICE** Always adjust all 3 cams and make sure they are all set at the same number.

# PROCEDURES

## DRIVE PULLEY

### Removing the Drive Pulley

| REQUIRED TOOLS | |
|---|---|
| CLUTCH HOLDER (P/N 529 036 369) |  |
| PDRIVE PULLER (P/N 529 036 370) |  |

1. Remove drive belt. Refer to *DRIVE BELT* subsection.
2. Remove the drive pulley bolt.
   2.1 Secure the drive pulley with the clutch holder.
   2.2 Using a breaker bar, remove the drive pulley bolt and its conical spring washer.

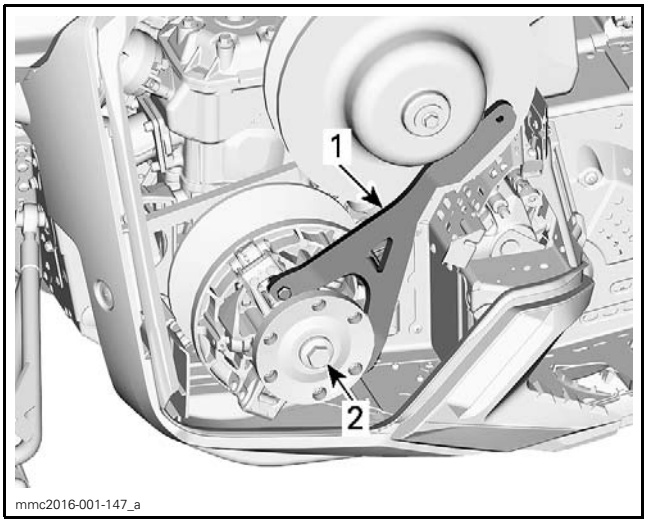


*1. Clutches holder*
*2. Drive pulley bolt*

3. Remove the drive pulley from engine.
   3.1 Make sure the clutches holder is properly installed.
   3.2 Screw the pDrive puller in place of the drive pulley bolt.
   3.3 Tighten the pDrive puller until pulley is disengaged from the crankshaft end.

**NOTICE** These pulleys have metric threads. Do not use a puller with ANS (American National Standard) or IS (International Standard) type threads. Always tighten puller by hand to ensure that the drive pulley has the same type of threads (metric vs ANS or IS) prior to fully tightening.

## Disassembling the Drive Pulley

| REQUIRED TOOLS | |
|---|---|
| PDRIVE PULLER (P/N 529 036 370) |  |
| DRIVE PULLEY SUPPORT (P/N 529 036 371) |  |
| PULLEY SPRING COMPRESSOR TOOL (P/N 529 036 373) |  |

| REQUIRED TOOLS | |
|---|---|
| CIRCLIP INSTALLER/REMOVER (P/N 529 036 375) |  |
| REMOVING AXLE TOOL (P/N 529 036 372) |  |
| DRIVE PULLEY OPENING TOOL (P/N 529 036 378) |  |

### Separating Fixed and Sliding Sheaves

To separate fixed sheave from sliding sheave, screw puller into fixed sheave shaft about 13 mm (1/2 in).

Raise drive pulley and hold it by the sliding sheave while knocking on puller head to disengage fixed sheave.

**NOTICE** NEVER tap on spider.

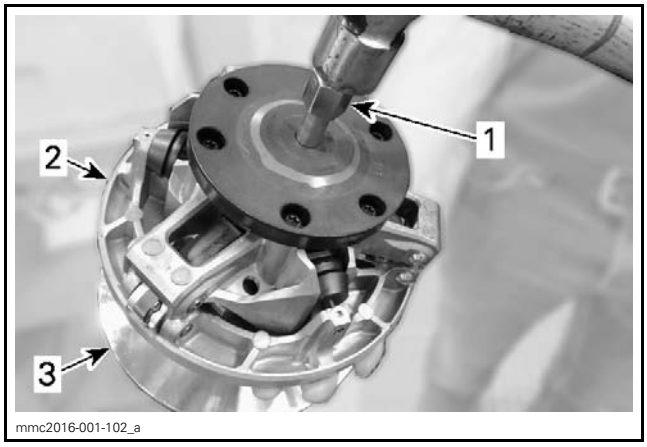


*1. Puller screwed 13 mm (1/2 in) in fixed sheave*
*2. Sliding sheave*
*3. Fixed sheave*

NOTE: No component marking is required before disassembly. This drive pulley features factory apposed index marks as references.

**NOTICE** Never use any type of torch to heat spider.

### Removing the Damper

1. Secure the drive pulley support in a vice.
2. Install the drive pulley on the support.

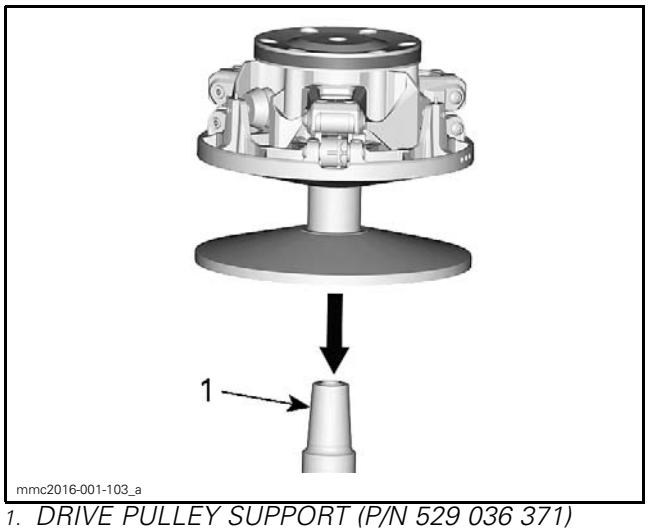


1. *DRIVE PULLEY SUPPORT (P/N 529 036 371)*

3. Loosen the damper screws.
4. Separate fixed and sliding sheaves. Refer to procedure above.
5. Remove the damper.

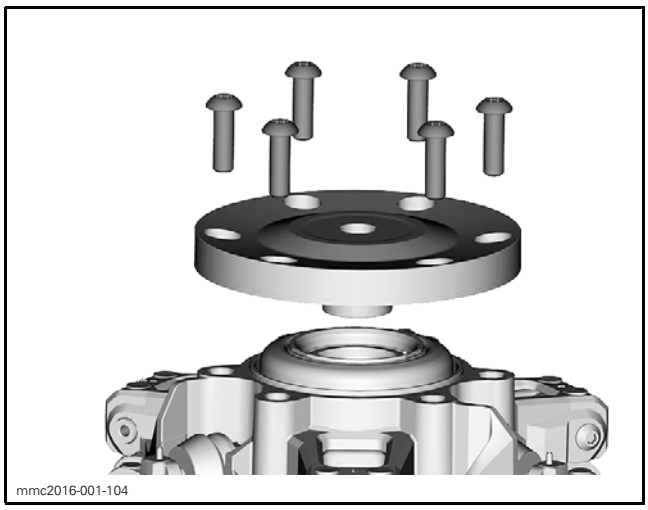


## Removing the Spring

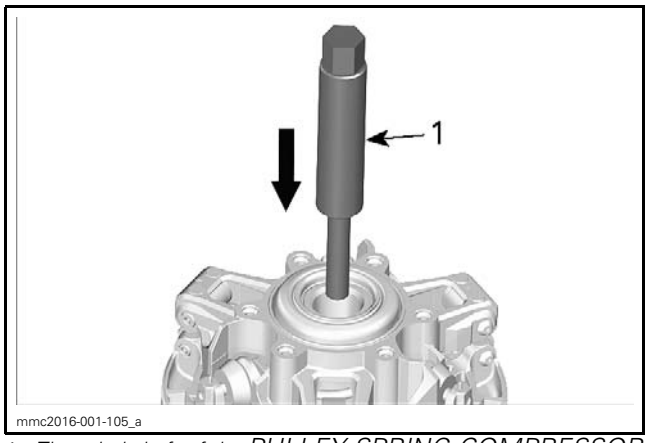


1. *Threaded shaft of the PULLEY SPRING COMPRESSOR TOOL (P/N 529 036 373)*

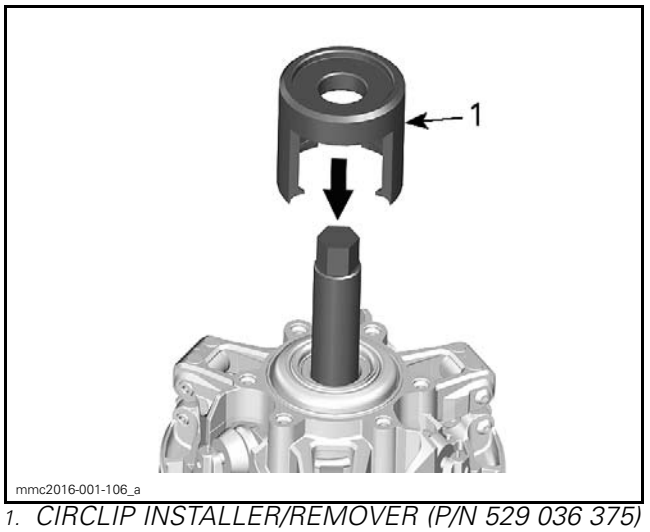


1. *CIRCLIP INSTALLER/REMOVER (P/N 529 036 375)*

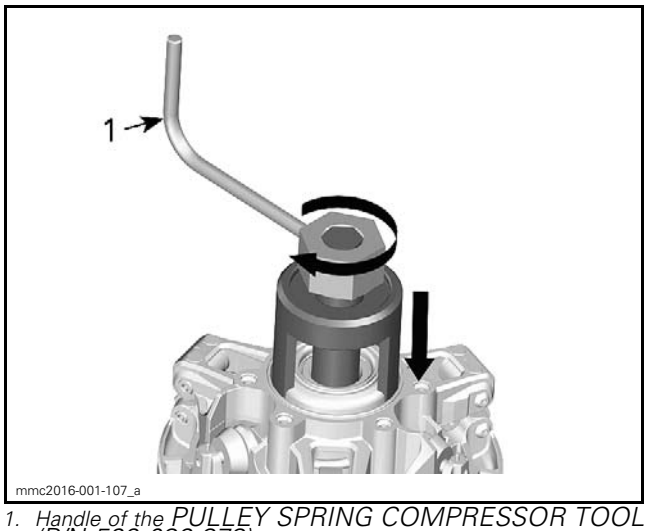


1. *Handle of the PULLEY SPRING COMPRESSOR TOOL (P/N 529 036 373)*

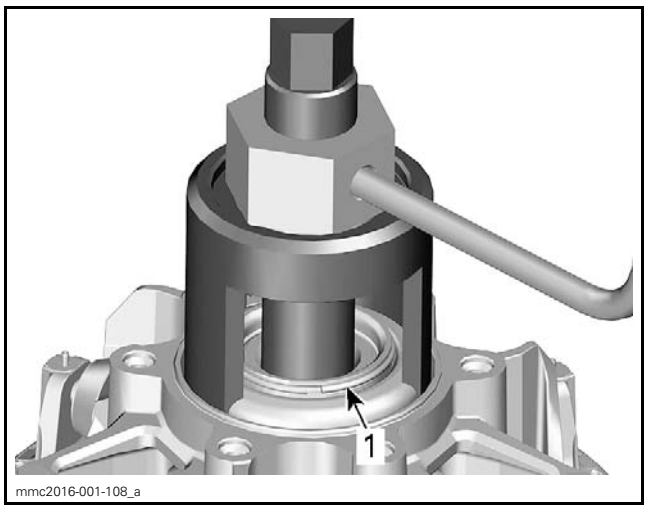


1. *Remove the circlip*

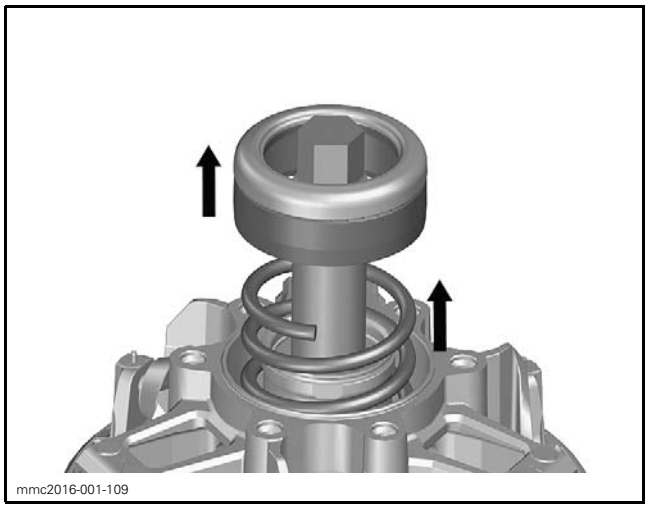
mmc2016-001-109

### Removing the Spider

1. Remove the threaded shaft.

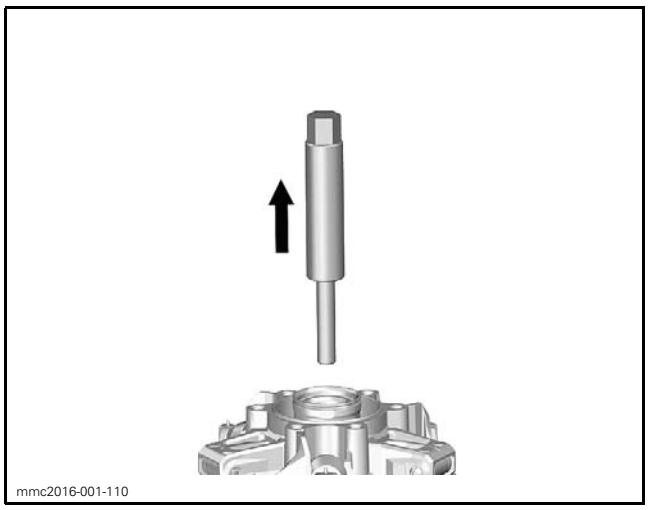
mmc2016-001-110

**NOTICE** Remove the threaded shaft to avoid damaging the bushings inside the spider.

2. Remove the spider.

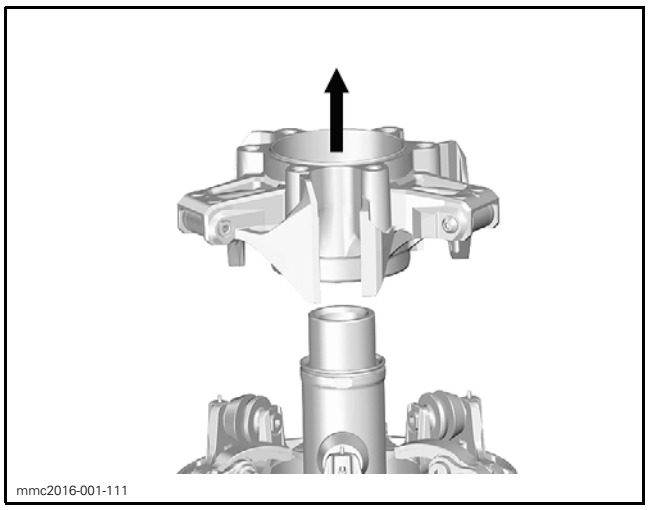
mmc2016-001-111

### Removing the Roller

1. Remove axle retaining screw.

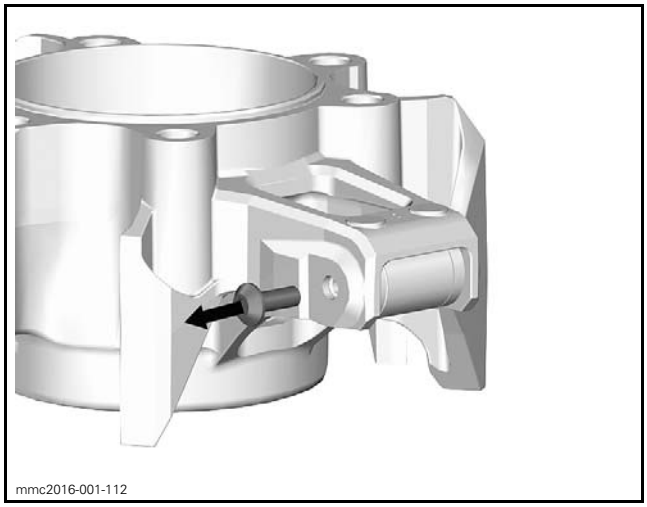
mmc2016-001-112

2. Remove the axle.

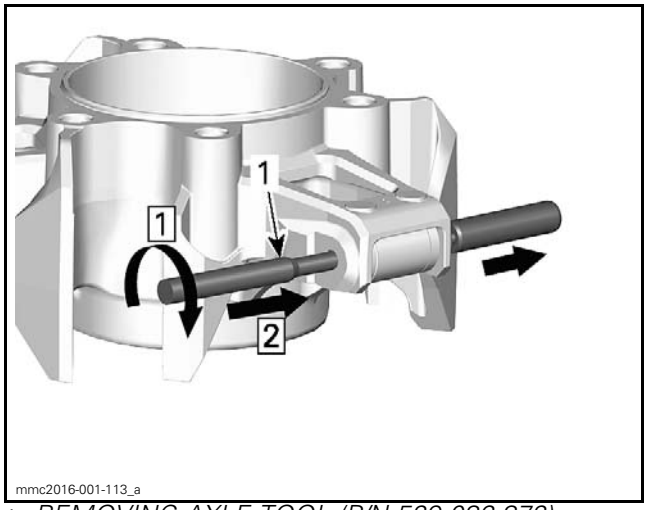

mmc2016-001-113_a

*1. REMOVING AXLE TOOL (P/N 529 036 372)*

*Step 1: Screw the tool into the axle*
*Step 2: Push axle to the right side*

3. Remove the roller and its thrust washers.

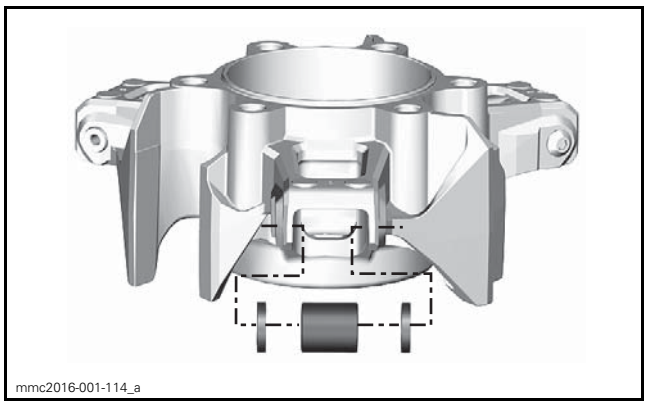
mmc2016-001-114_a

### Removing the Ramp (without Spider)

1. Remove axle retaining screw.

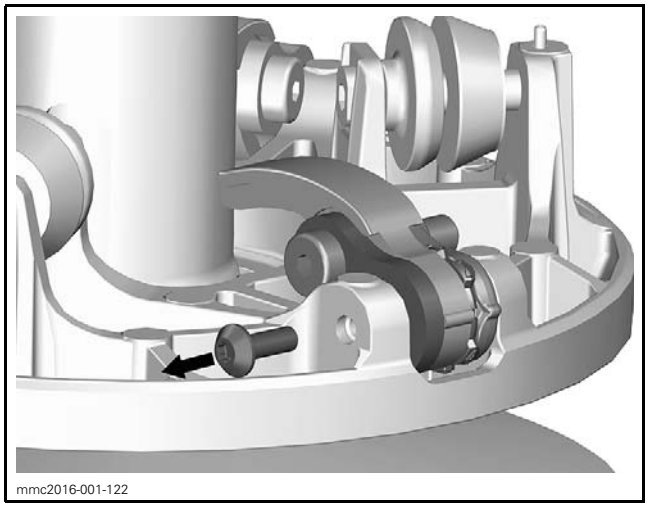


*TYPICAL*

2. Remove the axle.

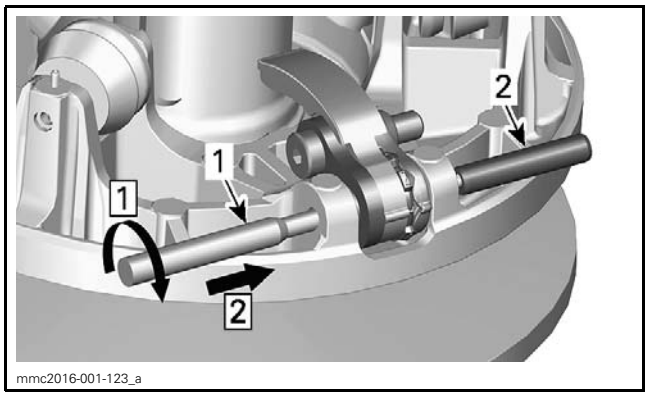


*TYPICAL*
*1. REMOVING AXLE TOOL (P/N 529 036 372)*
*2. Axle*

*Step 1: Screw the tool into the axle*
*Step 2: Push axle to the right side*

3. Remove ramp assembly.

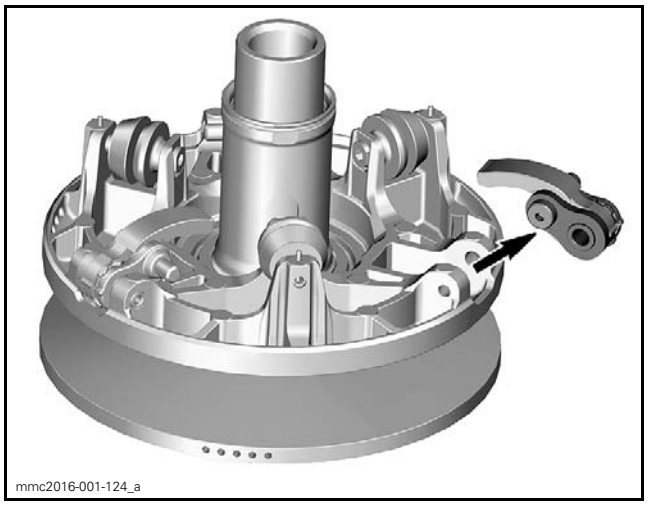


*TYPICAL*

### Removing the Ramp (Spider Installed)

1. Lower the sliding sheave.
   1.1 Secure the drive pulley support in a vice.
   1.2 Install the drive pulley over the support.
   1.3 Install the drive pulley opening tool.

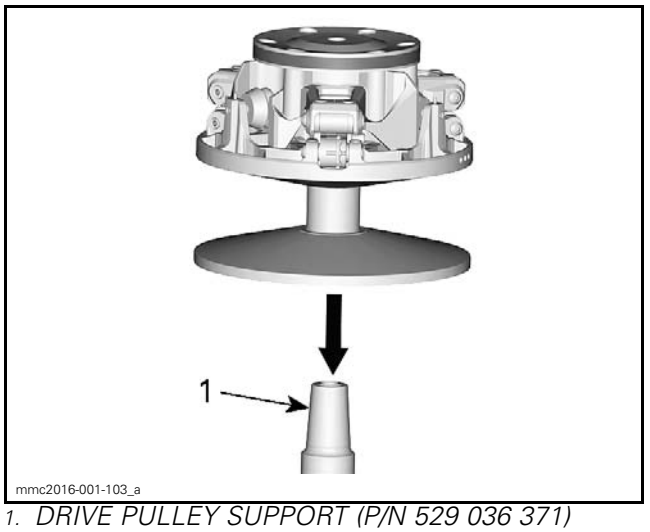


*1. DRIVE PULLEY SUPPORT (P/N 529 036 371)*

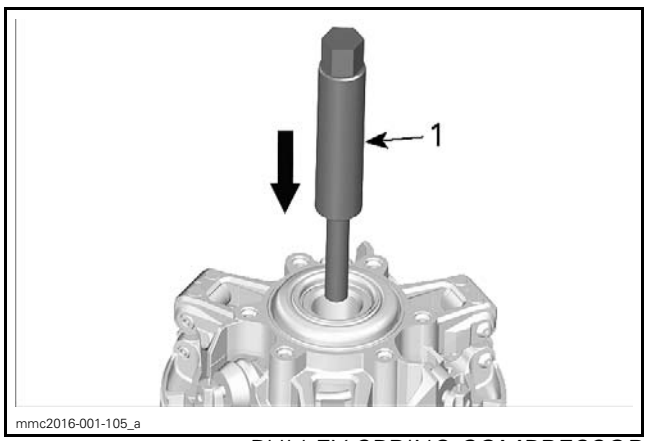


*1. Threaded shaft of the PULLEY SPRING COMPRESSOR TOOL (P/N 529 036 373)*

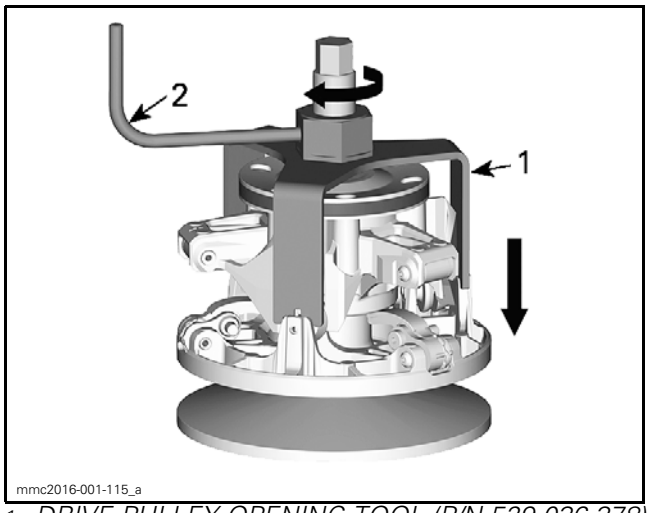


1. *DRIVE PULLEY OPENING TOOL (P/N 529 036 378)*
2. *Handle of the PULLEY SPRING COMPRESSOR TOOL (P/N 529 036 373)*

2. Remove axle retaining screw.

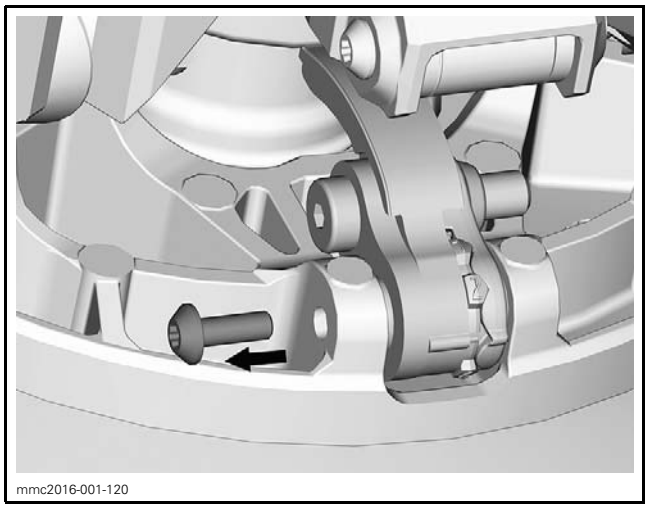


3. Remove the axle.

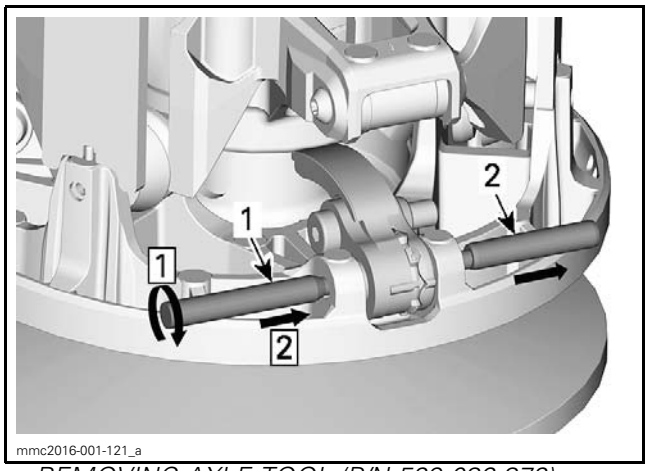


1. *REMOVING AXLE TOOL (P/N 529 036 372)*
2. *Axle*

*Step 1: Screw the tool into the axle*
*Step 2: Push axle to the right side*

4. Remove ramp assembly.

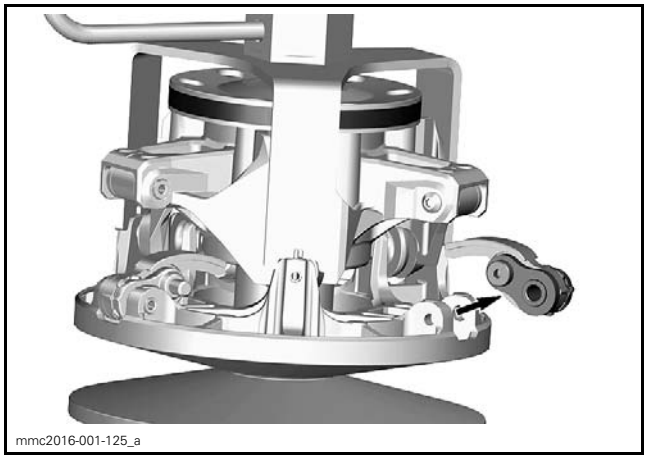


*TYPICAL*

## Removing the Torque Rollers

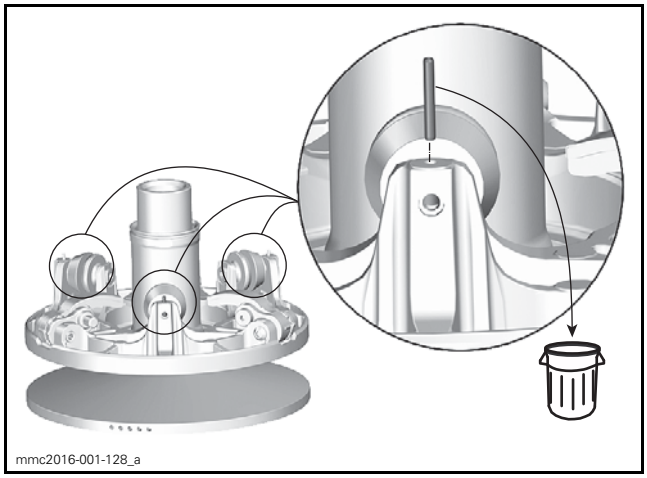


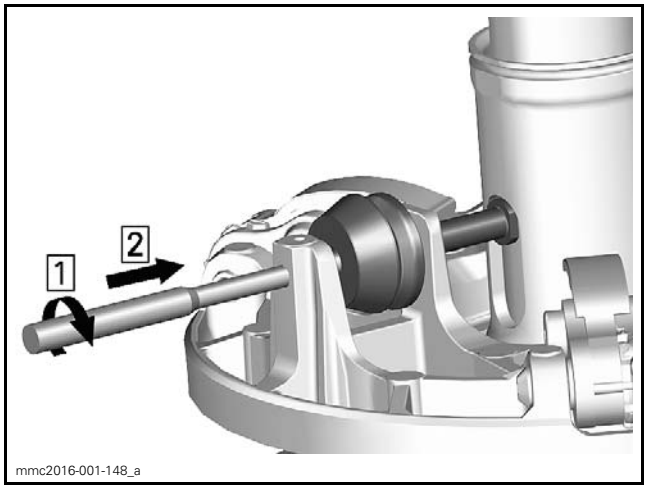


*Step 1: Screw the tool into the axle*
*Step 2: Push axle towards the center of the pulley*

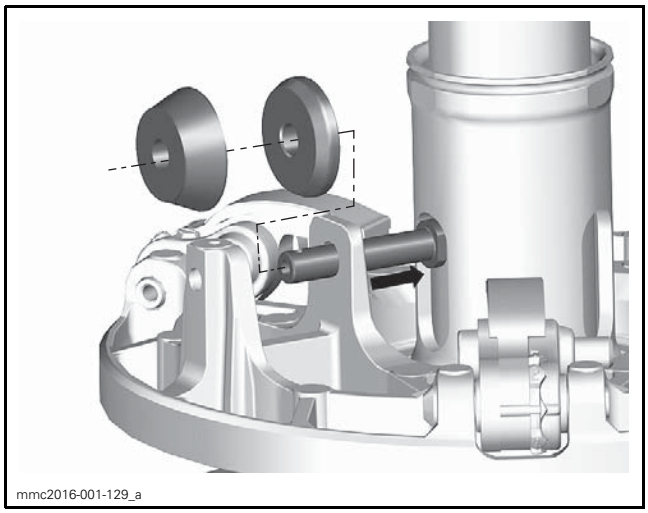
mmc2016-001-129_a

### Replacing the Sliding Sheave Bushing

In case of worn out bushing, it is advisable to replace whole sliding sheave assembly as replacing just the bushing may reduce drive pulley performance.

## Cleaning the Drive Pulley

NOTE: Parts must be at room temperature before cleaning.

Clean pulley sheaves and shaft with fine steel wool and dry cloth.

| SERVICE PRODUCT |
| --- |
| CLUTCH AND PULLEY FLANGE CLEANER PRO S1 (P/N 779244)<br>+<br>paper towel |

Clean the following components.
- Crankshaft tapered end
- Taper inside fixed sheave of drive pulley
- Crankshaft threads
- Retaining screw threads.

**NOTICE** Avoid contact between cleaner and crankshaft seal because damage may occur.

Remove all hardened oil deposits that are baked on crankshaft and pulley tapered surfaces with coarse or medium steel wool and/or sand paper no. 600.

**NOTICE** Do not use any other type of abrasive.

Reclean mounting surfaces with paper towel and cleaning solvent.

Wipe off the mounting surfaces with a clean, dry paper towel.

**NOTICE** Mounting surfaces must be free of any oil, cleaner or towel residue.

## Assembling the Drive Pulley

### Torque Rollers

Position torque rollers as illustrated.

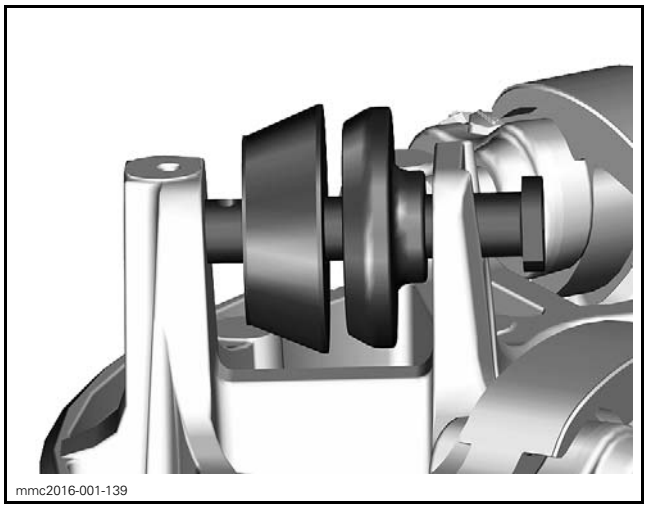
mmc2016-001-139

Position the flat sides of the axle head inside the slot of the mounting lug.

Install a new spring pin.

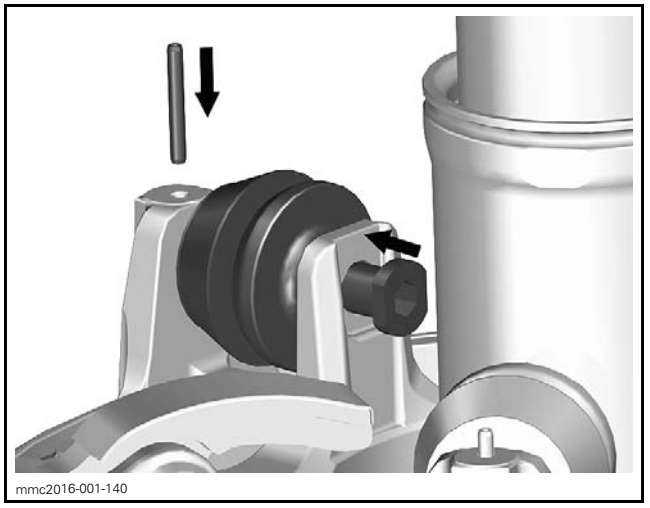
mmc2016-001-140

### Ramp

Assemble the ramp as illustrated. Do not torque the pivot yet.

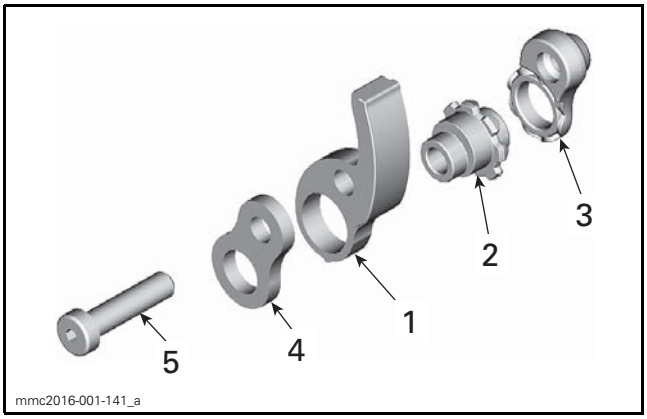


1. *Ramp*
2. *Cam*
3. *Right lever*
4. *Left lever*
5. *Pivot*

Install the ramp assembly on the sliding sheave.

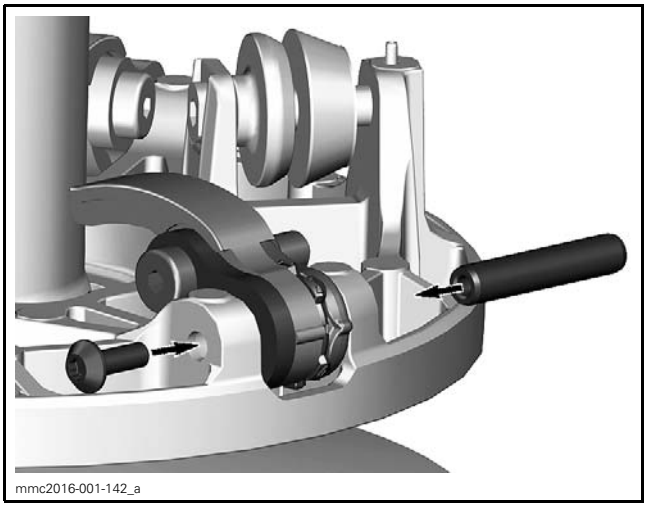


| TIGHTENING TORQUE | |
|---|---|
| Axle screw | 5 N•m ± 0.5 N•m (44 lbf•**in** ± 4 lbf•**in**) |

Position the cam to the desired position.

For factory setting, refer to *SPECIFICATIONS (VEHICLE)*.

**NOTICE** Make sure all cams are set at the same number.

| TIGHTENING TORQUE | |
|---|---|
| Pivot | 8 N•m ± 1 N•m (71 lbf•**in** ± 9 lbf•**in**) |

### Roller

Lubricate the roller bearing.

| SERVICE PRODUCT |
|---|
| ISOFLEX GREASE TOPAS NB 52 (P/N 293 550 021) |

| REQUIRED TOOL | |
|---|---|
| GREASE INJECTOR (P/N 529 036 376) |  |

NOTE: A threaded end is required on the grease gun for using the grease injector.

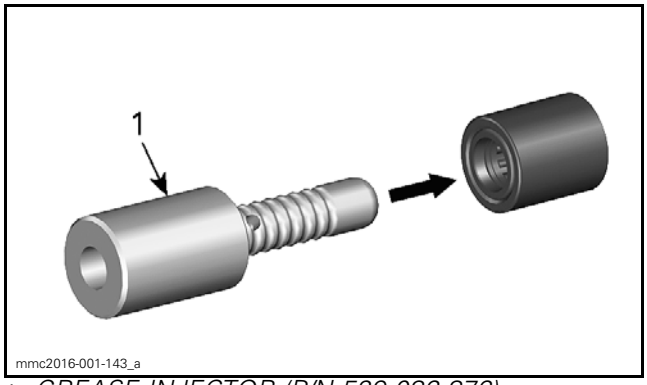


1. *GREASE INJECTOR (P/N 529 036 376)*

Install roller.

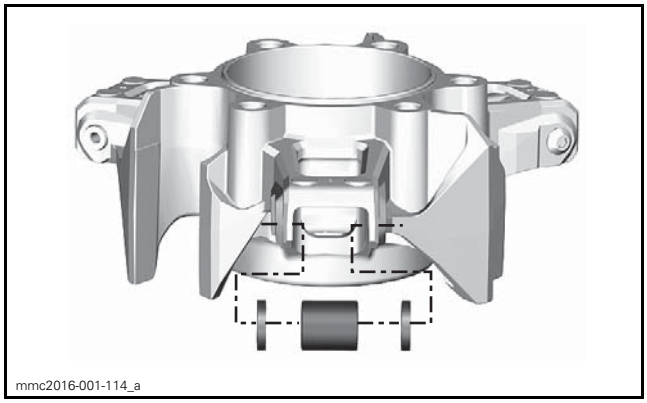


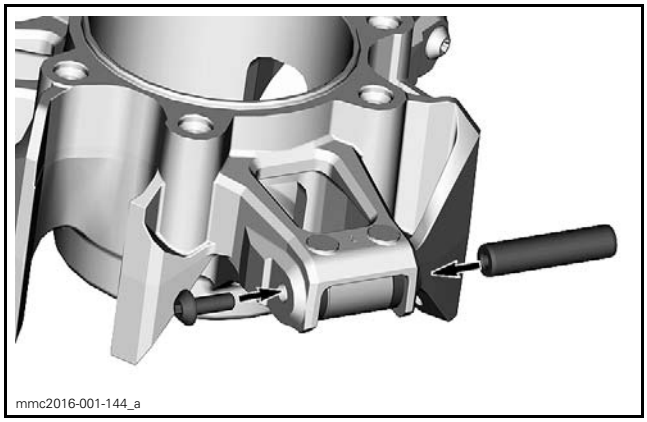


| TIGHTENING TORQUE | |
|---|---|
| Roller axle screw | 5 N•m ± 0.5 N•m (44 lbf•**in** ± 4 lbf•**in**) |

## Spider

Install the spider on the sliding sheave by aligning the indexing marks.

– Spider - the arrow on the arms #1, just above the roller.
– Sliding sheave - the dot on the external side of the sheave.

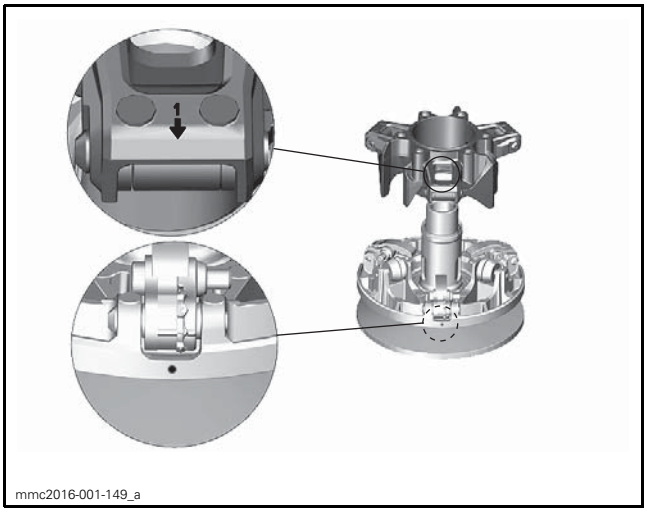


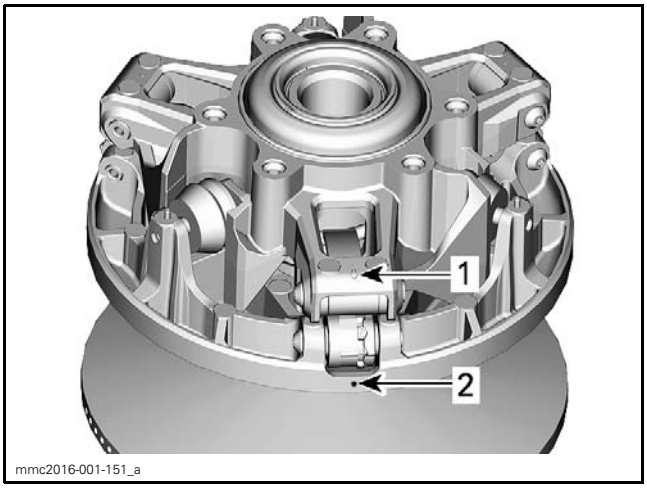


*FINAL POSITION*
1. *Arrow - spider arm*
2. *Dot - sliding sheave*

**NOTICE** During installation of the spider, make sure to position the three spurs of spider legs between torque rollers and ensure that ramps are positioned inside the openings of the spider.

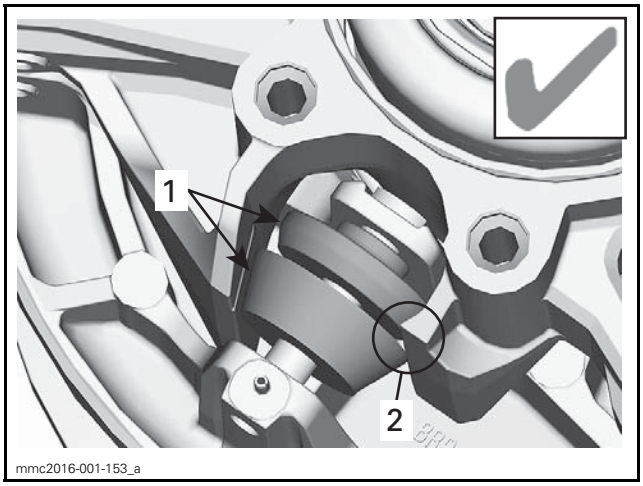


*ROLLER - GOOD INSTALLATION*
1. *Torque rollers*
2. *Spur of the spider leg*

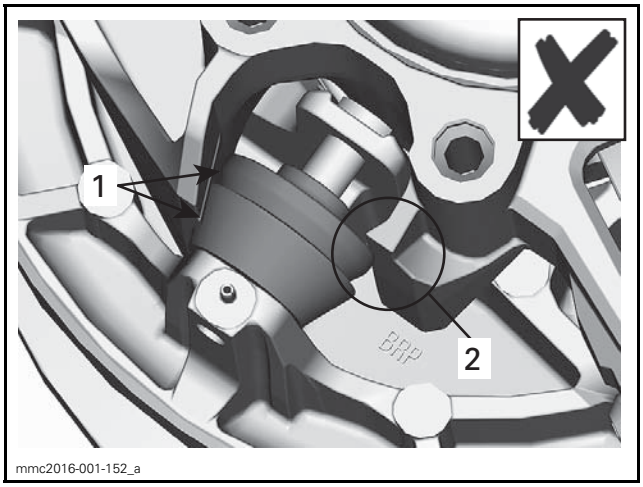


*ROLLER - WRONG INSTALLATION*
1. *Torque rollers*
2. *Spur of the spider leg*

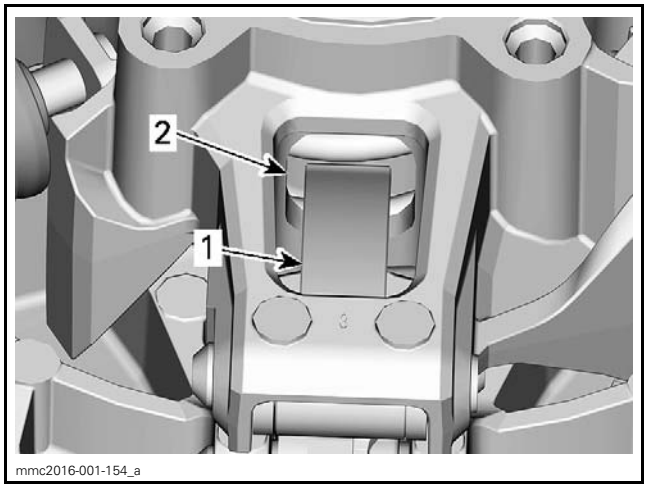


*RAMP POSITIONING*

## Damper

Install the damper using the following sequence.

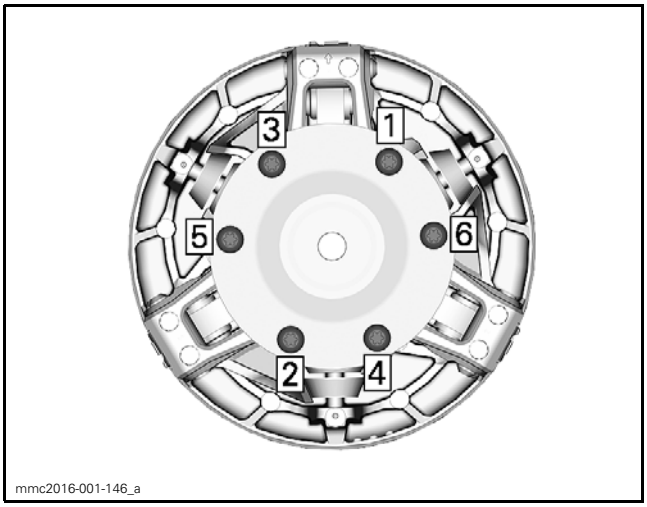


| TIGHTENING TORQUE | |
|---|---|
| Damper screws | 31.5 N•m ± 3.5 N•m (23 lbf•ft ± 3 lbf•ft) |

### Sliding Sheave and Fixed Sheave Assembly

Index sliding sheave with fixed sheave by aligning index marks.

– Sliding sheave - the arrow on the spider arms #1, just above the roller.
– Fixed sheave- the dot on the external side of the sheave.

## Installing the Drive Pulley

| REQUIRED TOOLS | |
|---|---|
| CLUTCH HOLDER (P/N 529 036 369) |  |

1. Clean mounting surfaces as described in *DRIVE PULLEY CLEANING* above.

**NOTICE** Do not apply antiseize or any lubricant on crankshaft and drive pulley tapers.

2. Install drive pulley on crankshaft end.

NOTE: The drive pulley can be installed in one position only. Drive pulley and crankshaft are indexed.

3. Install a NEW conical spring washer with its concave side towards drive pulley.
4. Install drive pulley bolt.

**NOTICE** Always use BRP genuine parts for conical spring washer and bolt.

5. Secure the drive pulley with the clutch holder.
6. Using a torque wrench, tighten the drive pulley bolt. Refer to *TIGHTENING THE DRIVE PULLEY* for the completed procedure.

### Tightening the Drive Pulley

Tighten the drive pulley bolt.

| TIGHTENING TORQUE | | |
|---|---|---|
| Drive pulley bolt | First torque | 120 N•m (89 lbf•ft) |

Before starting engine, perform drive pulley adjustment. Refer to *ADJUSTMENT*, at the beginning of this subsection.

Install drive belt and guard.

Raise the rear of the vehicle and support it with a mechanical stand.

**⚠ WARNING**

**Ensure that the track is free of particles which could be thrown out while track is rotating. Keep hands, tools, feet and clothing clear of track. Ensure nobody is standing near the vehicle.**

Accelerate the vehicle at low speed (maximum 32 km/h (20 MPH) and apply the brake, repeat 5 times.

Tighten the drive pulley bolt again.

| TIGHTENING TORQUE | | |
|---|---|---|
| Drive pulley bolt | Final torque | 120 N•m (89 lbf•ft) |

**⚠ WARNING**

**After 10 hours of operation the transmission system of the vehicle must be inspected to ensure drive pulley bolt is still properly torqued.**

# DRIVEN PULLEY AND COUNTERSHAFT (EFI)

## SERVICE TOOLS

| Description | Part Number | Page |
|---|---|---|
| BEARING PULLER DRIVEN SUPPORT | 529 036 485 | 389 |
| COUNTERSHAFT ADAPTER | 529 036 424 | 395 |
| COUNTERSHAFT BEARING INSTALLER | 529 036 066 | 396 |
| COUNTERSHAFT BEARING REMOVER | 529 036 065 | 395 |
| COUNTERSHAFT SUPPORT | 529 036 067 | 395 |
| DRIVEN PULLEY SPRING COMPRESSOR | 529 036 182 | 389 |
| UPPER GEAR RETAINING TOOL | 529 036 110 | 388 |

## SERVICE PRODUCTS

| Description | Part Number | Page |
|---|---|---|
| CLUTCH AND PULLEY FLANGE CLEANER PRO S1 | 779244 | 393, 396 |
| LOCTITE 243 (BLUE) | 293 800 060 | 393 |
| LOCTITE 609 | 413 703 100 | 396 |
| LOCTITE 648 (GREEN) | 413 711 400 | 394 |
| LOCTITE 7649 (F) | 619 600 100 | 396 |
| LOCTITE 7649 (PRIMER) | 293 800 041 | 396 |
| LOCTITE 767 (ANTI-SEIZE LUBRICANT) | 293 800 070 | 395 |
| PULLEY FLANGE CLEANER (F) | 619 600 022 | 393, 396 |

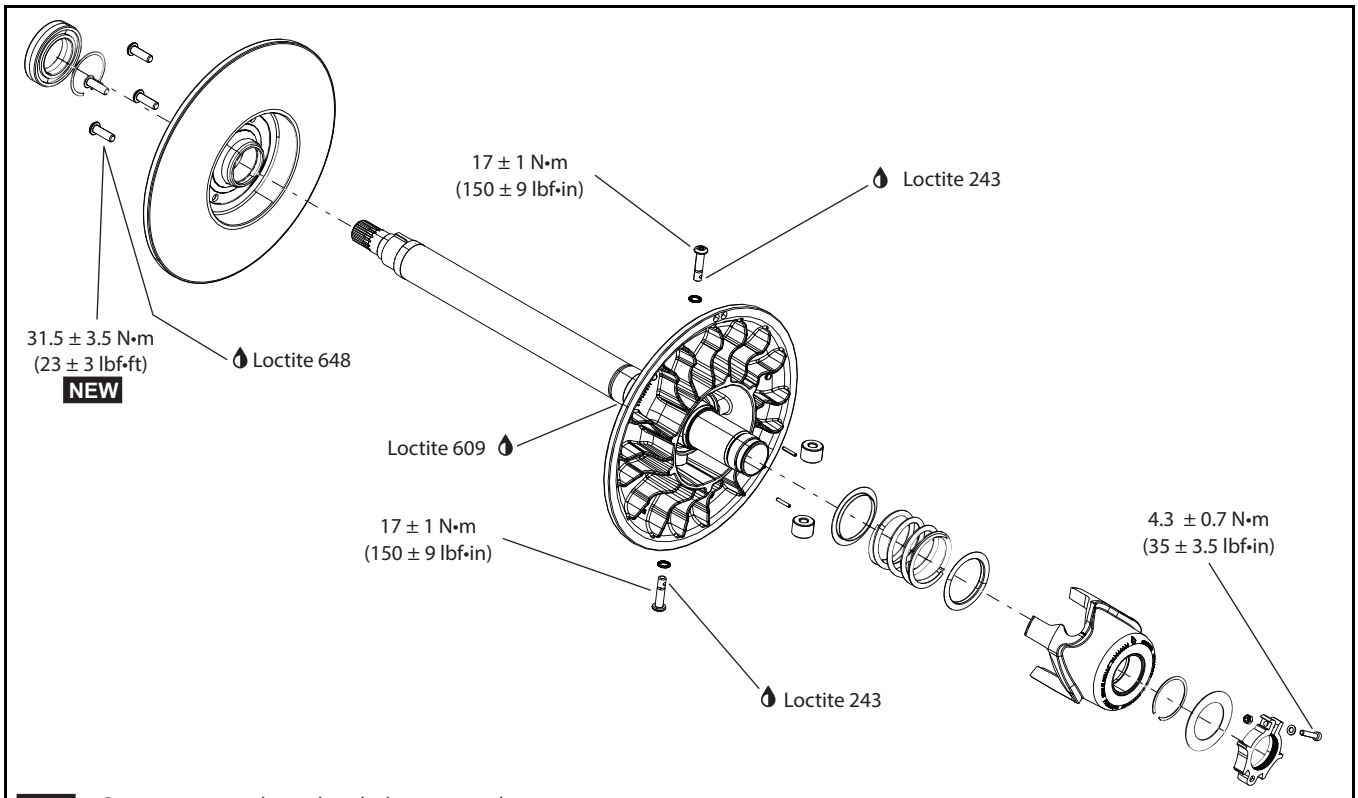

# GENERAL

During assembly/installation, use the torque values and the service products as in the exploded views.

Clean threads before applying a threadlocker. Refer to *SELF-LOCKING FASTENERS* and *LOCTITE APPLICATION* at the beginning of this manual for complete procedure.

**⚠ WARNING**

**Torque wrench tightening specifications must be strictly adhered to.**
**Locking devices (e.g.: locking tabs, elastic stop nuts, cotter pins, etc.) must be replaced with new ones.**

**⚠ WARNING**

**Never start engine when the pulley guard is removed.**

# PROCEDURES

## DRIVEN PULLEY

### Removing the Driven Pulley

NOTE: The driven pulley is removed with the countershaft.

1. Remove the muffler. Refer to *EXHAUST SYSTEM* subsection.
2. Remove the filling plug on the chaincase cover.

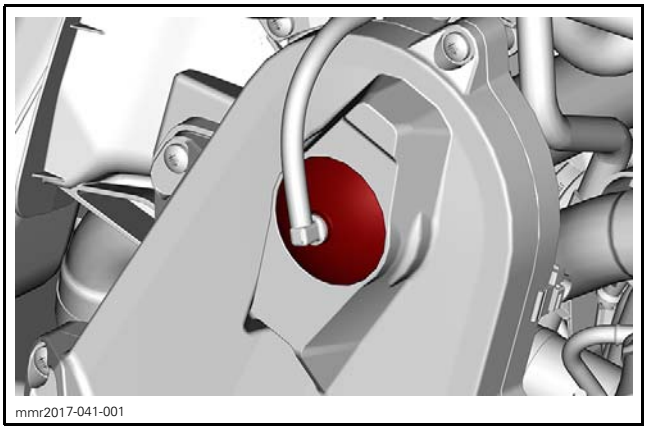

mmr2017-041-001

3. Release drive chain tension by unscrewing tensioner adjustment screw.

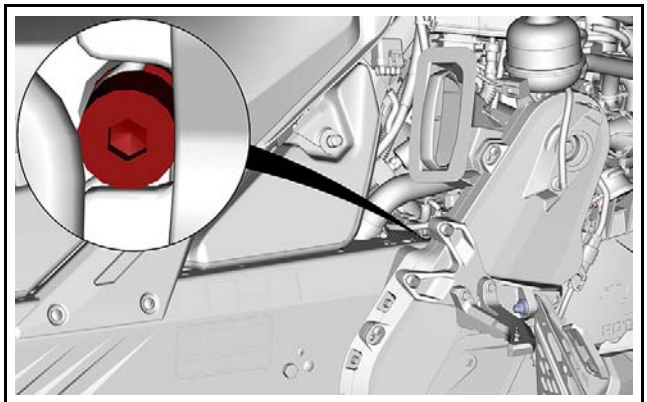

mmr2017-041-002

4. Remove the upper gear screw and the conical spring washer.

NOTE: Slightly tilt the bolt to avoid dropping washer inside chaincase.

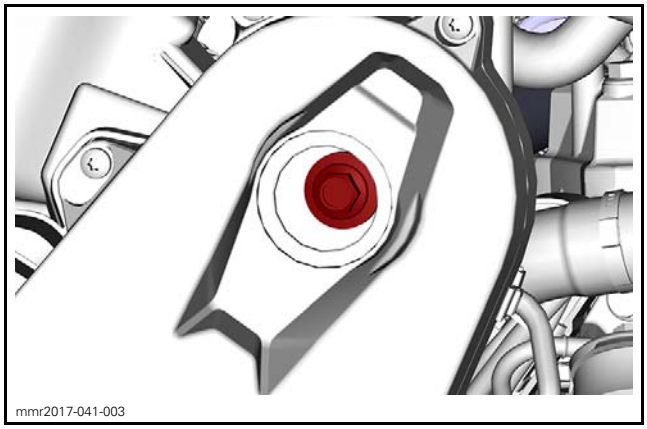

mmr2017-041-003

5. Install the gear retaining tool on countershaft end.

| REQUIRED TOOL | |
|---|---|
| UPPER GEAR RETAINING TOOL (P/N 529 036 110) |  |

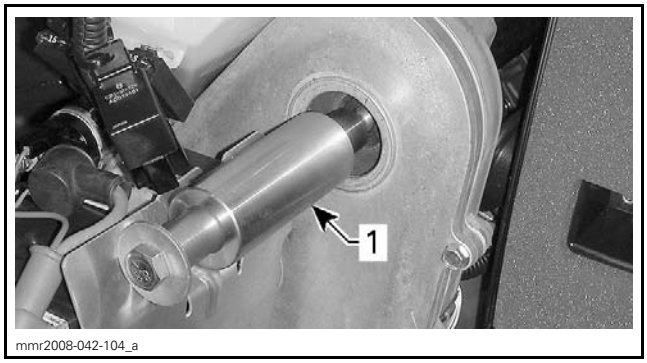


mmr2008-042-104_a

*TYPICAL*
*1. Upper gear retaining tool*

6. Remove the drive belt. Refer to *DRIVE BELT* subsection.

7. Behind driven pulley, remove nut securing the countershaft bearing flange.

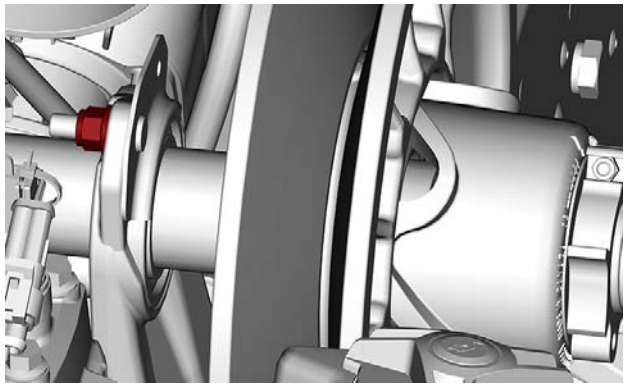
mmr2017-041-004

8. Pull out bearing flange.
9. Use the bearing puller to extract the bearing from the support.

| REQUIRED TOOL | |
|---|---|
| BEARING PULLER DRIVEN SUPPORT (P/N 529 036 485) |  |

10. Pull the driven pulley to disengage countershaft and upper gear.

NOTE: If necessary, tap the upper gear retaining tool with a plastic hammer.

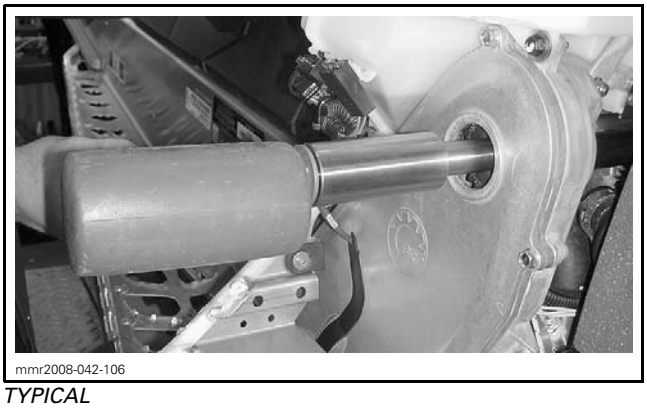
mmr2008-042-106
*TYPICAL*

11. Unscrew countershaft from the upper gear retaining tool. **Do not** remove tool.

NOTE: While countershaft is removed from vehicle, the upper gear retaining tool maintains the drive chain and the upper gear in position inside chaincase.

## Driven Pulley Disassembly

### Removing Cam and Spring

1. Loosen the clamping screw.

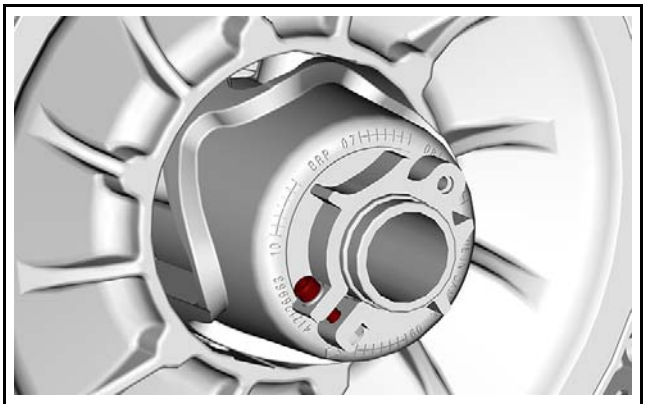
mmr2017-041-005

2. Unscrew the adjuster hub **clockwise** using the suspension adjustment tool provided in the vehicle tool kit.

NOTE: The adjuster hub has LH treads.

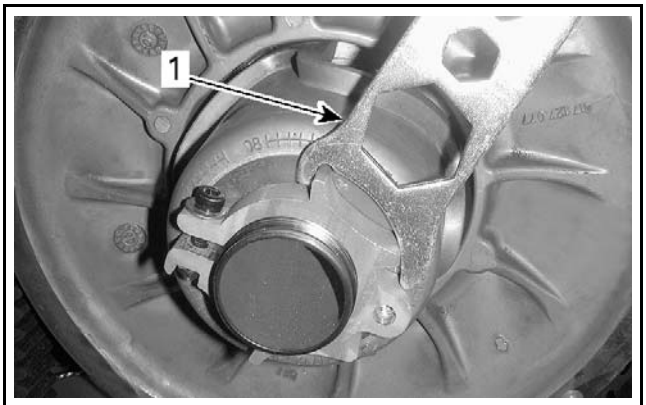

mmr2013-034-010_a
*1. Suspension adjustment tool shown*

| REQUIRED TOOL | |
|---|---|
| DRIVEN PULLEY SPRING COMPRESSOR (P/N 529 036 182) |  |

3. Install the threaded adapter of the spring compressor on the countershaft.

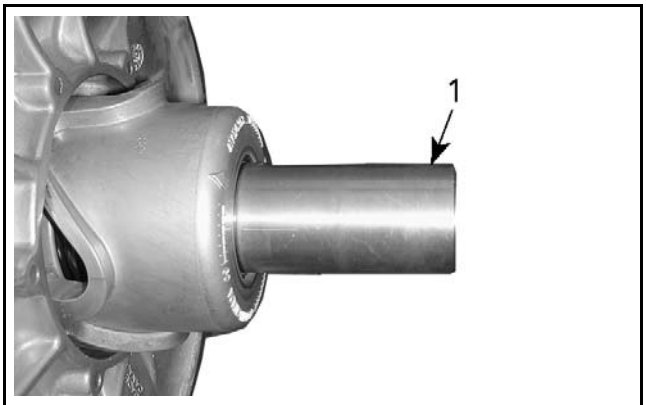

mmr2008-042-110_a
*1. Threaded adapter*

4. Install the external sleeve over the threaded adapter and secure sleeve with the tool screw.

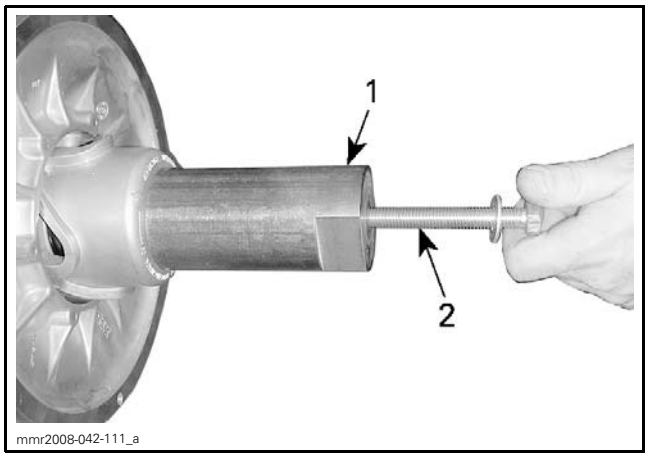


*1. External sleeve*
*2. Driven pulley spring compressor screw*

5. Tighten the tool screw to compress the cam.
6. Install the tool in a vice.

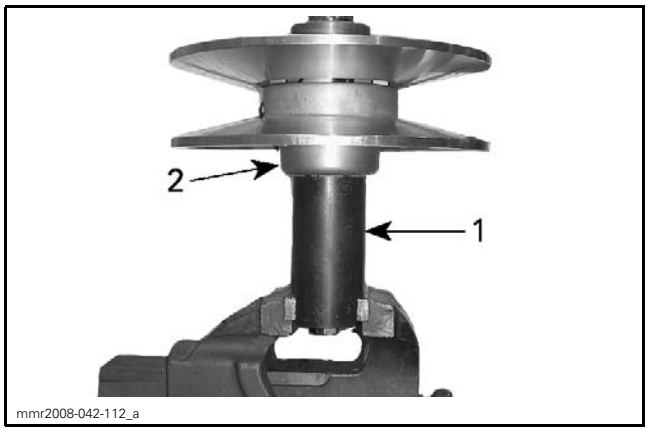


*1. Driven pulley spring compressor*
*2. Driven pulley*

7. Using a heat gun, heat cam screws to break the thread locker.

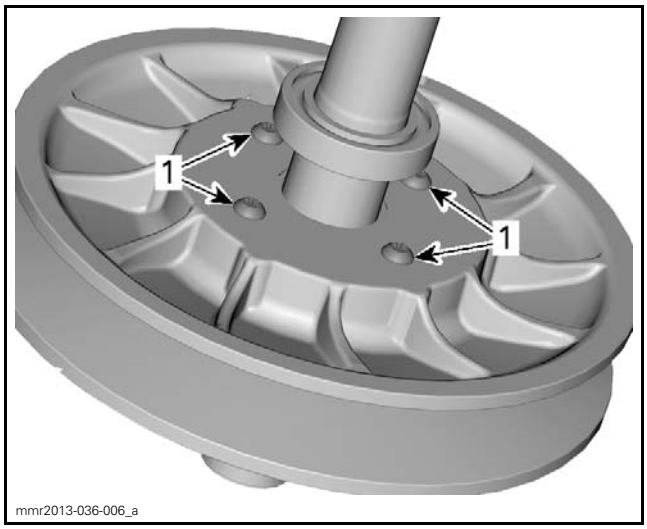


*1. Heat cam screws*

8. Remove and discard cam screws.
9. Unscrew the tool screw completely.
10. Remove cam, spring stoppers and spring.

### Removing the Sliding Sheave

1. Remove the cam and spring. Refer to procedure in this subsection.
2. Remove the countershaft bearing. Refer to procedure in this subsection.
3. Remove sliding sheave.

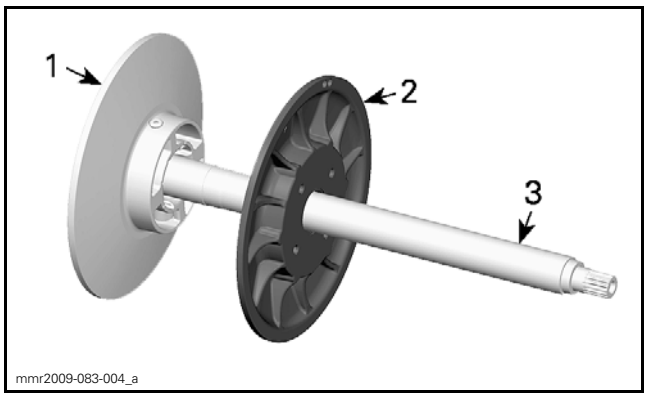


*1. Fixed sheave*
*2. Sliding sheave*
*3. Countershaft*

### Removing the Fixed Sheave

The fixed sheave and countershaft are sold as an assembly. They are not available separately.

### Removing the Driven Pulley Rollers

1. Move sliding and fixed sheaves apart.
2. Remove spring pins used to lock pivot screws.
   2.1 Use tap wrench to start removing spring pin.

2.2 Once spring pin is accessible to pliers, pull pin out using pliers.

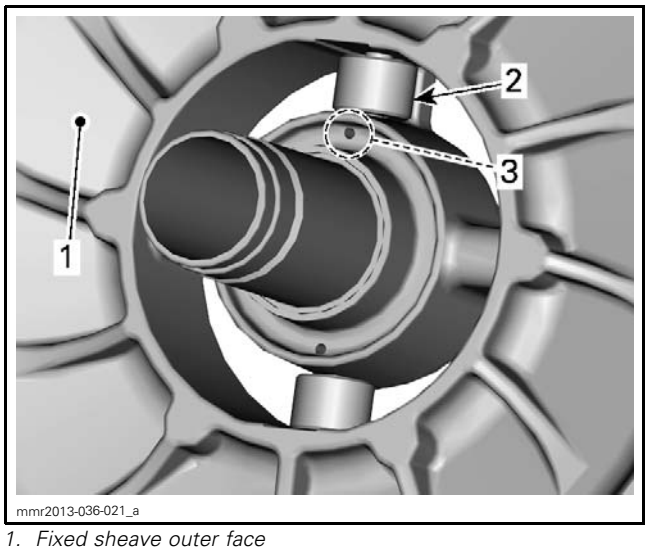


*1. Fixed sheave outer face*
*2. Roller*
*3. Spring pin location*

3. Identify pivot screws location before removal.
4. Remove pivot screw and ribbed lock washer; **keep both for reuse**.

***NOTICE*** **Make sure not to damage or lose pivot screws. If screws need to be replaced, replace fixed sheave assembly.**

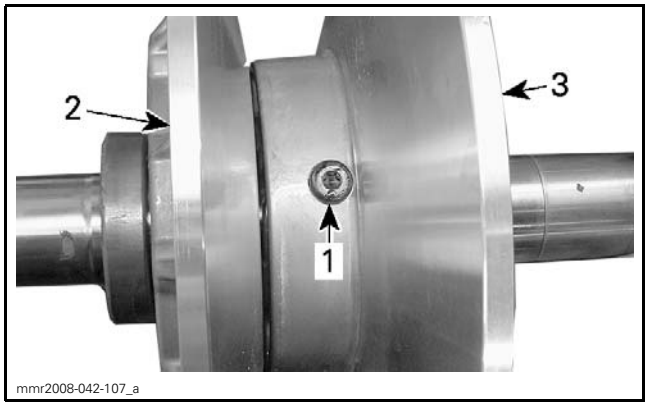


*1. Pivot screw*
*2. Sliding sheave*
*3. Fixed sheave*




*PIVOT SCREW REMOVAL*

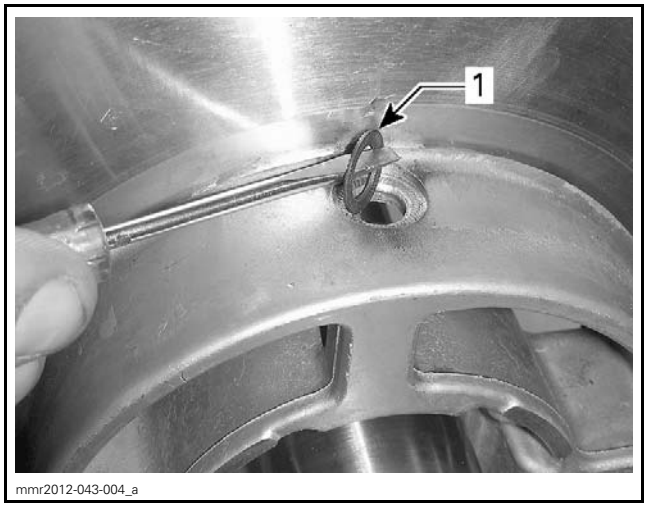


*1. Ribbed lock washer*

5. Remove roller.
6. Proceed with removal of other roller.

**IMPORTANT:** For proper fit, each pivot screw must be reinstalled where originally mounted in the fixed sheave.

## Inspecting the Driven Pulley

### Inspecting Cam and Spring

1. Verify contact surfaces of cam for visible damages. Ensure circlip properly locks the inner bushing. Replace part if necessary.
2. Using a dial bore gauge, measure the inner diameter of cam bushing. Measuring point must be at least 5 mm (1/4 in) from bushing edge.

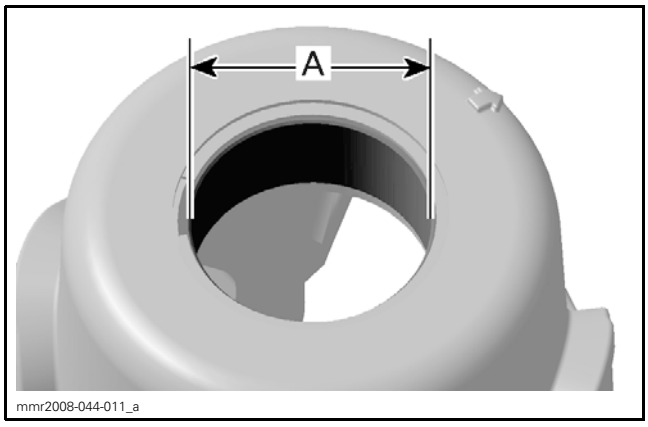


*A. Inner diameter of cam bushing*

| CAM BUSHING | SERVICE LIMIT |
|---|---|
| Inner diameter | 41.5 mm (1.634 in) |

3. Replace the cam if the inner diameter of bushing is out of specification.

### Inspecting the Sliding Sheave

1. Inspect pulley sheave for marks or scratches.
2. Ensure circlip properly locks the inner bushing. Replace part if necessary.
3. Using a dial bore gauge, measure the inner diameter of sliding sheave bushing. Measuring point must be at least 5 mm (1/4 in) from bushing edge.

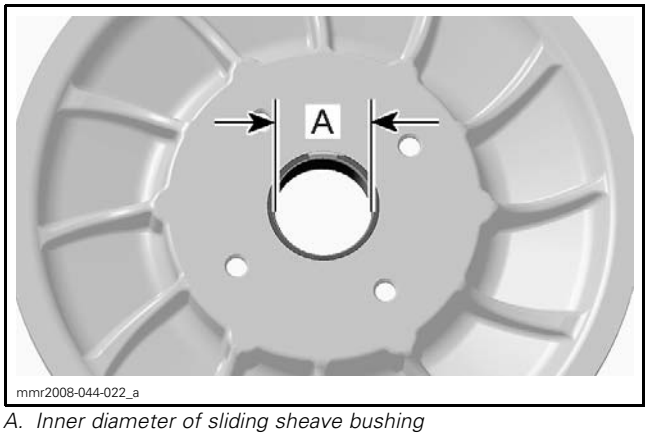


*A. Inner diameter of sliding sheave bushing*

| SLIDING SHEAVE BUSHING | SERVICE LIMIT |
|---|---|
| Inner diameter | 41.5 mm (1.634 in) |

4. Replace the sliding sheave if the inner diameter of bushing is out of specification.

### Inspecting the Fixed Sheave

Replace fixed sheave and countershaft if one of the following problem is detected:

– Marks or scratches on pulley sheave
– Bent, twisted or otherwise damaged countershaft
– Defective splines and threads at the end of countershaft.

### Inspecting the Driven Pulley Roller

1. Check the rollers for flat spots, cracks or other visible damages. Replace if necessary (as a set).
2. Measure inner and outer diameter of rollers.

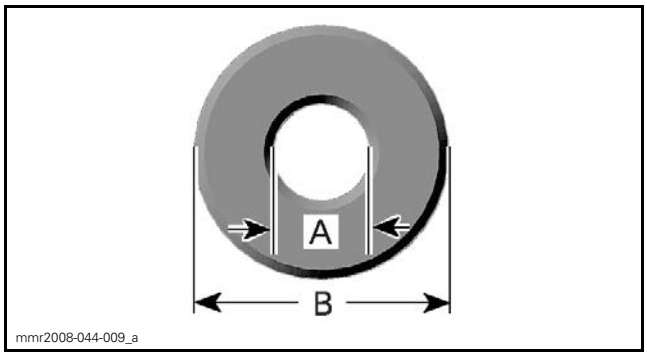


*A. Inner diameter*
*B. Outer diameter*

| DRIVEN PULLEY ROLLER | SERVICE LIMIT |
|---|---|
| Inner diameter | 8.5 mm (.335 in) |
| Outer diameter | 21.5 mm (.846 in) |

3. Measure the roller thickness.

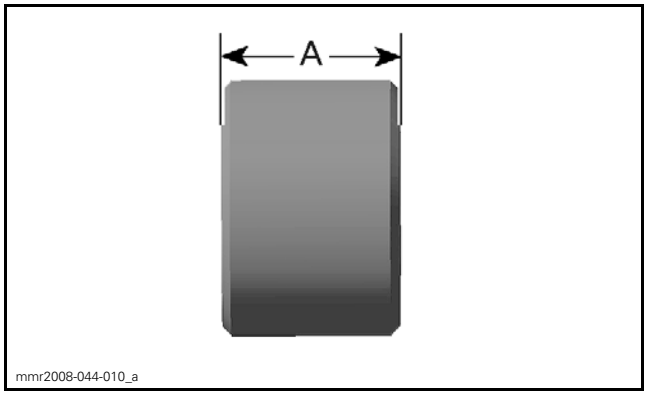


*A. Thickness of roller*

| DRIVEN PULLEY ROLLER | SERVICE LIMIT |
|---|---|
| Thickness | 14.75 mm (.581 in) |

4. If a roller is out of specifications, replace both rollers at the same time.

## Cleaning the Driven Pulley

Use the a clean rag to clean pulley sheaves.

| SERVICE PRODUCT | |
|---|---|
| Scandinavia | PULLEY FLANGE CLEANER (F) (P/N 619 600 022) |
| Other Countries | CLUTCH AND PULLEY FLANGE CLEANER PRO S1 (P/N 779244) |

### Cleaning Cam and Spring

During break-in period, teflon from bushing moves to cam or countershaft surface. A teflon over teflon running condition occurs, leading to low friction. So it is normal to see gray teflon deposit on cam or countershaft. Do not remove this deposit.

When a dust deposit has to be removed from the cam or the countershaft, use dry cloth to avoid removing transferred teflon.

## Driven Pulley Assembly

### Installing the Driven Pulley Roller

NOTE: Exceptionally, do NOT clean threaded hole to avoid changing the screw position when torqued.

1. Using a hand wire brush, clean pivot screw threads.

IMPORTANT: Do not use a thread die to clean pivot screw of threadlocker as this may alter the screw threads.

NOTE: Pivot screw and ribbed lock washer must be reused if in good condition. If damaged, replace fixed sheave assembly.

2. Apply the following threadlocker to the pivot screw threads.

| SERVICE PRODUCT | |
|---|---|
| Pivot screw threads | LOCTITE 243 (BLUE) (P/N 293 800 060) |

3. Insert roller in fixed sheave, thread in pivot screw with ribbed lock washer.

NOTE: The ribbed locked washer must be installed with the concave side towards the fixed sheave.

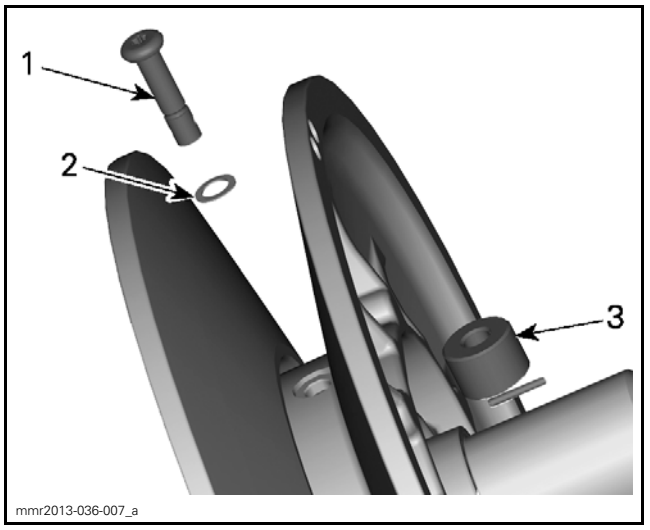


*1. Pivot screw*
*2. Ribbed lock washer (concave side towards fixed sheave)*
*3. Roller*

IMPORTANT: For proper fit, each pivot screw must be reinstalled where originally mounted in the fixed sheave.

4. Torque pivot screw as specified.

| TIGHTENING TORQUE | |
|---|---|
| Pivot screws | 17 N•m ± 1 N•m (150 lbf•**in** ± 9 lbf•**in**) |

NOTE: Spring pin hole in the fixed sheave and pivot screw must perfectly line up when torque is applied.

***NOTICE*** **If not properly aligned, spring pin will not insert in pivot screw hole and spring pin threads in fixed sheave will be damaged.**

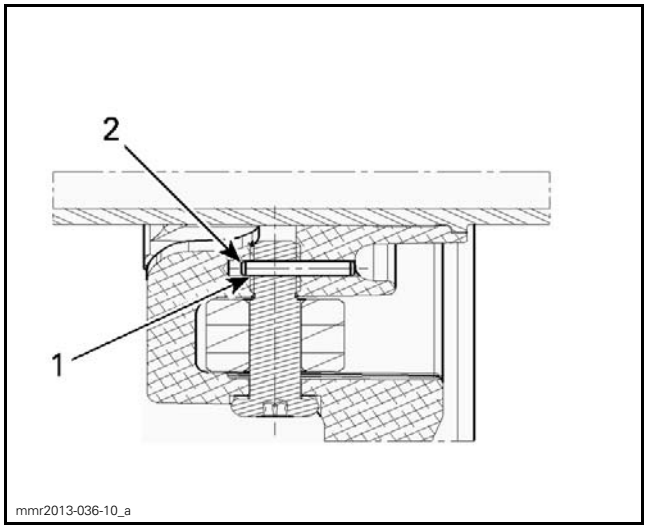


*1. Hole in pivot screw*
*2. Spring pin*

5. Install spring pin.

### Installing Cam and Spring

1. Install a spring stopper, the spring, the other spring stopper and the cam.

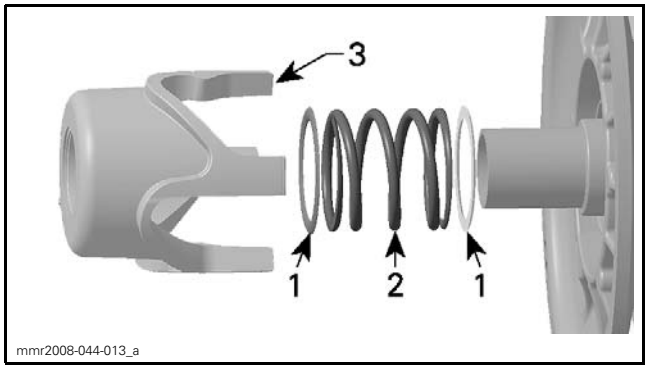


*1. Spring stopper*
*2. Spring*
*3. Cam*

2. Align the arrow on the cam with the arrow on the fixed sheave.

NOTE: On completion of cam installation, the arrow on the cam should have moved clockwise (approximately 30°).




3. Install the driven pulley spring compressor sleeve and tighten the tool screw until the cam is completely pressed against the sliding sheave.
4. Apply threadlocker on the thread of 4 new cam screws.

| RECOMMENDED SERVICE PRODUCT |
|---|
| LOCTITE 648 (GREEN) (P/N 413 711 400) |

5. From the back of the sliding sheave, install the 4 new cam screws.
6. Torque cam screws as specified.

| TIGHTENING TORQUE | |
|---|---|
| Cam screw | 31.5 N•m ± 3.5 N•m (23 lbf•ft ± 3 lbf•ft) + LOCTITE 648 (GREEN) (P/N 413 711 400) |

7. Remove the tool.

### Installing the Sliding Sheave

The assembly of sliding sheave is the reverse of the disassembly. However, pay attention to the following.

When installing sliding sheave, make sure to align its arrow with the arrow on cam.

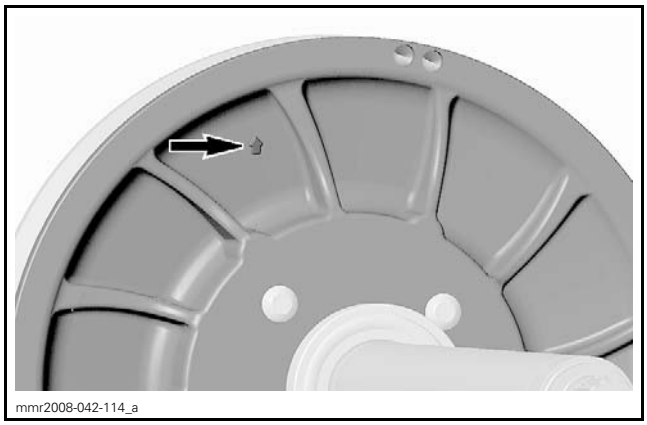


*SLIDING SHEAVE ARROW*




*CAM ARROW*

## Installing the Driven Pulley

1. Using sand paper (600-grit or 1000-grit) or steel wool, remove any rust on bearing shoulder of countershaft bearing support.

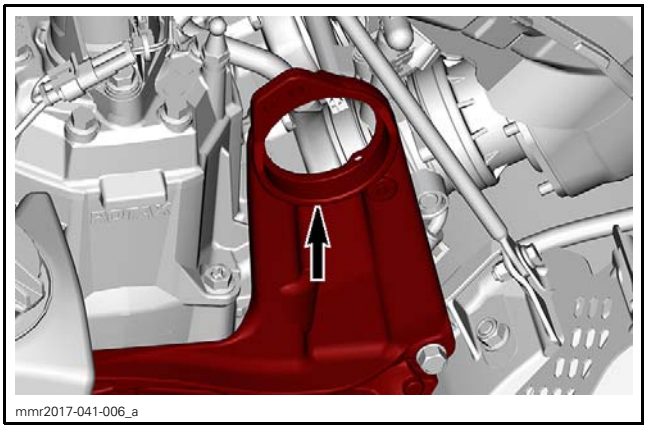


*BEARING SUPPORT SHOULDER*

2. Apply a thin layer of antiseize lubricant on bearing shoulder.

| SERVICE PRODUCT |
|---|
| LOCTITE 767 (ANTI-SEIZE LUBRICANT) (P/N 293 800 070) |

3. Insert countershaft through countershaft bearing support.
4. Fasten the end of countershaft to upper gear retaining tool.
5. Align countershaft splines with upper gear splines.
6. Using the upper gear retaining tool as a puller, Engage countershaft splines in upper gear splines. Ensure countershaft bearing is installed properly in countershaft bearing support.
7. Remove the upper gear retaining tool.
8. Install the upper gear screw and the conical spring washer.

NOTE: The conical spring washer must be installed with its concave side towards upper gear.

9. Torque upper gear screw.
10. Install chaincase filler plug.
11. On LH side, install the bearing flange. Torque nut as specified.

| TIGHTENING TORQUE | |
|---|---|
| Bearing flange nut | 15.5 N•m ± 1.5 N•m (137 lbf•**in** ± 13 lbf•**in**) |

12. Install the adjuster hub onto the countershaft end and temporarily tighten.
13. Install and adjust drive belt. Refer to *DRIVE BELT* subsection.
14. Install all other removed parts.

# COUNTERSHAFT

The countershaft and the fixed sheave are sold as an assembly. They are not available separately.

## Removing and Installing the Countershaft

Refer to *DRIVEN PULLEY* in this subsection for the procedures.

# COUNTERSHAFT BEARING

## Removing the Countershaft Bearing

Remove the driven pulley. Refer to procedure in this subsection.

Install the bearing remover on countershaft.

| REQUIRED TOOL | |
|---|---|
| COUNTERSHAFT BEARING REMOVER (P/N 529 036 065) |  |
| COUNTERSHAFT ADAPTER (P/N 529 036 424) |  |

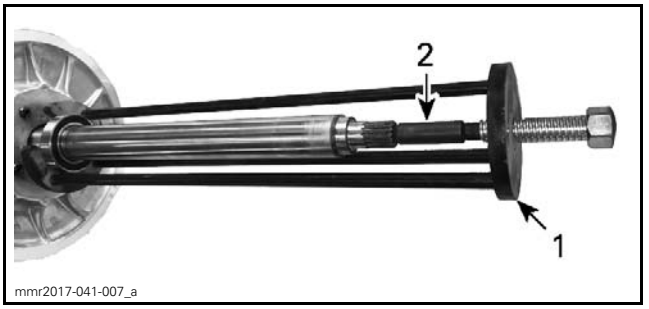


*1. Countershaft adapter*
*2. Countershaft bearing remover*

Tighten the screw at the end of tool to extract the bearing. Discard bearing.

## Installing the Countershaft Bearing

1. Remove the adjuster hub from the cam.
2. Insert the countershaft support in the countershaft.

| REQUIRED TOOL |
|---|
| COUNTERSHAFT SUPPORT (P/N 529 036 067) |

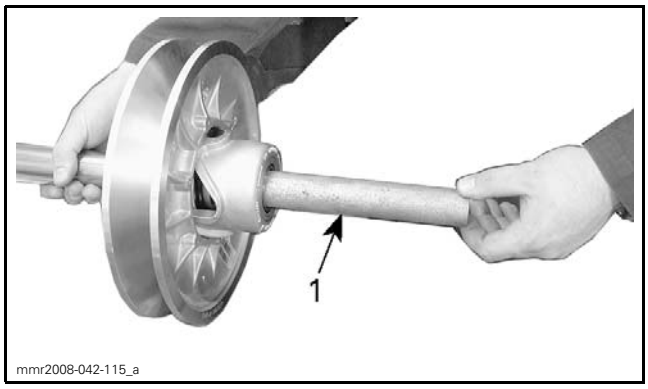


*1. Countershaft support*

**NOTICE** The countershaft support is mandatory to avoid damaging the countershaft threaded end and the cam during bearing installation.

3. Clean residues on countershaft bearing surface.

| SERVICE PRODUCT | |
|---|---|
| Scandinavia | PULLEY FLANGE CLEANER (F) (P/N 619 600 022) |
| Other Countries | CLUTCH AND PULLEY FLANGE CLEANER PRO S1 (P/N 779244) |

4. Check countershaft bearing surface for wear.
5. Apply Loctite 7649 on countershaft bearing surface and let dry 5 minutes.

| SERVICE PRODUCT | |
|---|---|
| Scandinavia | LOCTITE 7649 (F) (P/N 619 600 100) |
| Other Countries | LOCTITE 7649 (PRIMER) (P/N 293 800 041) |

6. Apply Loctite 609 on primer.

| SERVICE PRODUCT |
|---|
| LOCTITE 609 (P/N 413 703 100) |

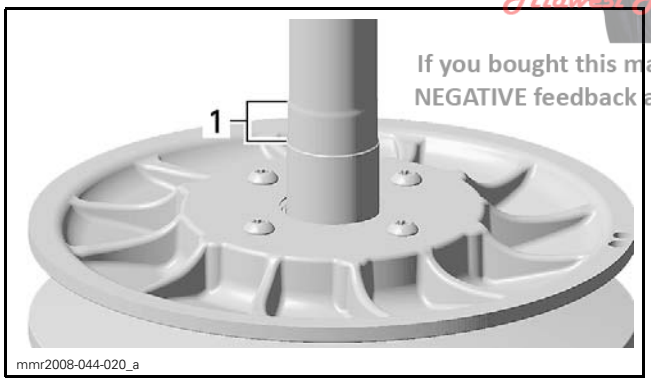


*1. Apply Loctite 7649 (Primer) before Loctite 609 in this region*

7. Using a press and the bearing installer, install the new bearing on countershaft.

| REQUIRED TOOL |
|---|
| COUNTERSHAFT BEARING INSTALLER (P/N 529 036 066) |

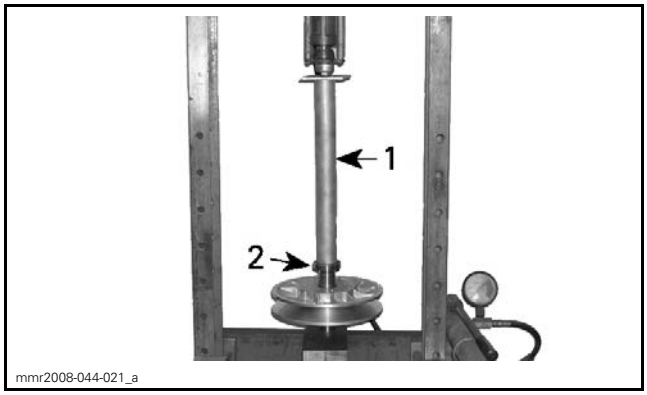


*1. Countershaft bearing installer*
*2. New bearing*

**NOTICE** Use a press only, never tap on countershaft bearing installer with an hammer to avoid damaging bearing and countershaft.

8. Clean the surplus Loctite with a rag to avoid having Loctite on sliding sheave bushing.

## COUNTERSHAFT BEARING SUPPORT

For countershaft bearing support removal and installation, refer to *COUNTERSHAFT BEARING SUPPORT* in *FRAME*.

Midwest Manuals
Green Manuals
Paperless Manuals
For a Better Tomorrow
www.green-manuals.com
If you bought this manual from any other seller please leave them
NEGATIVE feedback and notify us at bestshopmanuals@gmail.com

# DRIVEN PULLEY AND COUNTERSHAFT (ACE)

## SERVICE TOOLS

| Description | Part Number | Page |
|---|---|---|
| BEARING PULLER DRIVEN SUPPORT | 529 036 485 | 401–402 |
| COUNTERSHAFT ADAPTER | 529 036 424 | 408 |
| COUNTERSHAFT BEARING INSTALLER | 529 036 066 | 409 |
| COUNTERSHAFT BEARING REMOVER | 529 036 065 | 408 |
| COUNTERSHAFT SUPPORT | 529 036 067 | 408 |
| DRIVEN ADAPTER | 529 036 508 | 408 |
| DRIVEN PULLEY SPRING COMPRESSOR | 529 036 182 | 402 |
| PRELOAD TESTER | 529 036 164 | 399 |

## SERVICE PRODUCTS

| Description | Part Number | Page |
|---|---|---|
| CLUTCH AND PULLEY FLANGE CLEANER PRO S1 | 779244 | 405, 409 |
| LOCTITE 243 (BLUE) | 293 800 060 | 405 |
| LOCTITE 609 | 413 703 100 | 409 |
| LOCTITE 648 (GREEN) | 413 711 400 | 406–407 |
| LOCTITE 7649 (F) | 619 600 100 | 409 |
| LOCTITE 7649 (PRIMER) | 293 800 041 | 409 |
| LOCTITE 767 (ANTI-SEIZE LUBRICANT) | 293 800 070 | 407–408 |
| PULLEY FLANGE CLEANER (F) | 619 600 022 | 405, 409 |

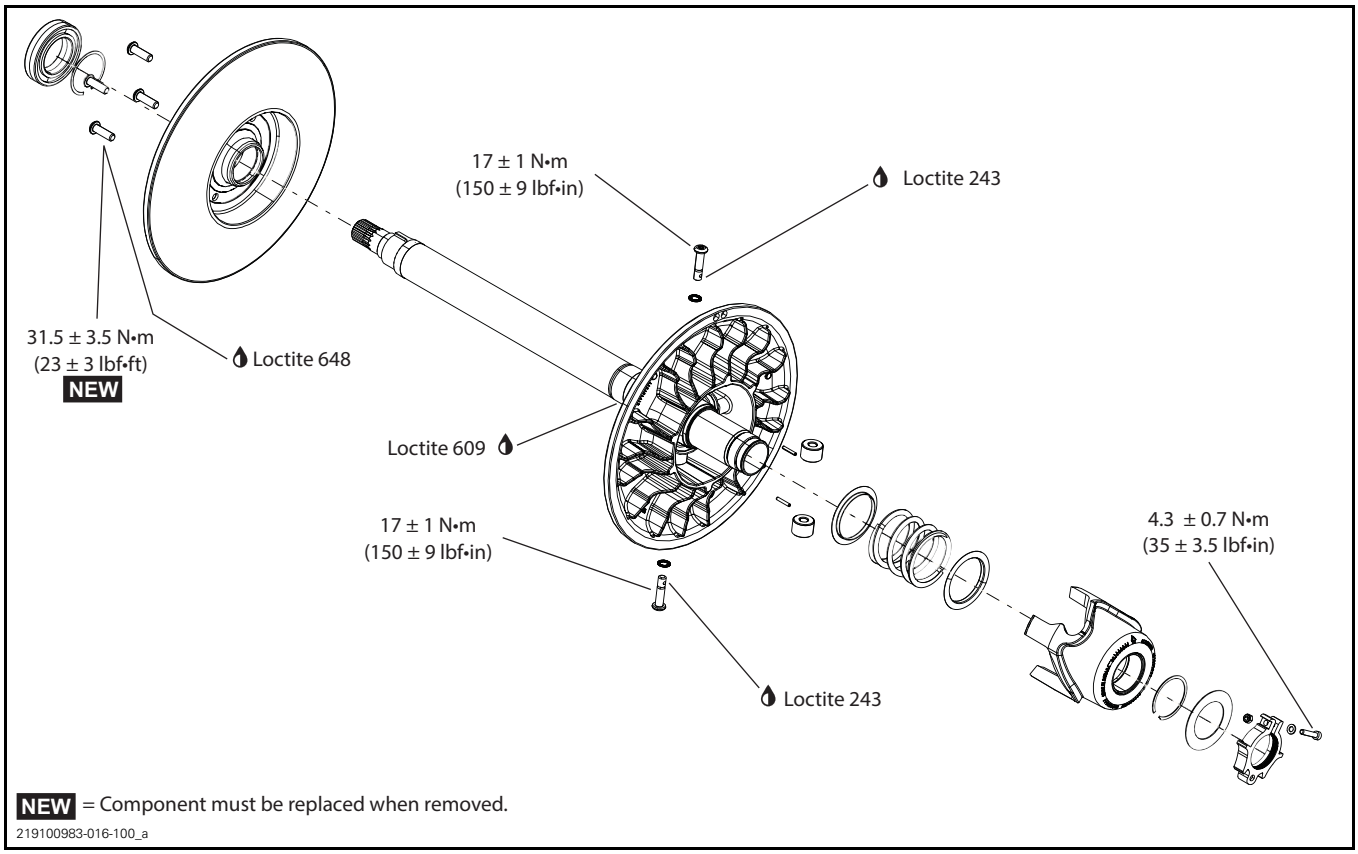
17 ± 1 N•m
(150 ± 9 lbf•in)
Loctite 243
31.5 ± 3.5 N•m
(23 ± 3 lbf•ft)
NEW
Loctite 648
Loctite 609
17 ± 1 N•m
(150 ± 9 lbf•in)
4.3 ± 0.7 N•m
(35 ± 3.5 lbf•in)
Loctite 243
NEW = Component must be replaced when removed.
219100983-016-100_a

# GENERAL

During assembly/installation, use the tightening torque values and the service products as in the exploded views.

Clean threads before applying a threadlocker. Refer to *SELF-LOCKING FASTENERS* and *LOCTITE APPLICATION* at the beginning of this manual for complete procedure.

**⚠ WARNING**

**Torque wrench tightening specifications must be strictly adhered to.**
**Locking devices (e.g.: locking tabs, elastic stop nuts, cotter pins, etc.) must be replaced with new ones.**

**⚠ WARNING**

**Never start engine when the pulley guard is removed.**

# PROCEDURES

## DRIVEN PULLEY

### Driven Pulley Spring Preload Verification

1. Remove driven pulley, see procedure in this subsection.
2. Loosen 2 cam screws without removing them.

NOTE: Heat the cam screws to ease loosening.

***NOTICE*** **If screws are completely removed, they must be replaced.**

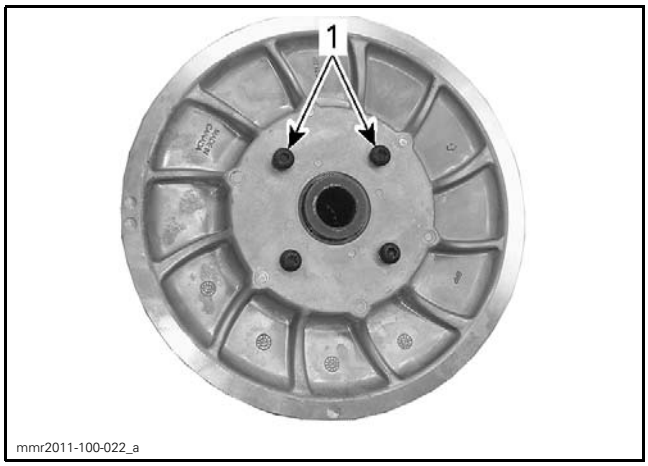


*1. Screws to be loosened*

3. Install the specified service tool.

| REQUIRED TOOL | |
|---|---|
| PRELOAD TESTER (P/N 529 036 164) | |

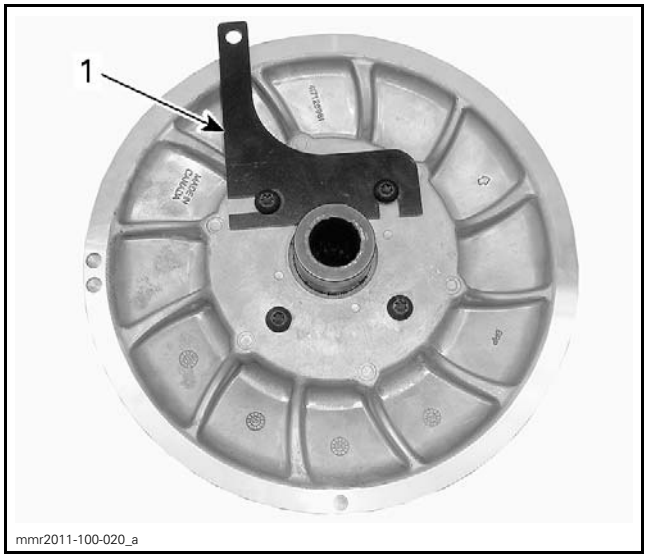


*1. Preload tester*

4. Install driven pulley.
5. Hook a fish scale to the preload tester.

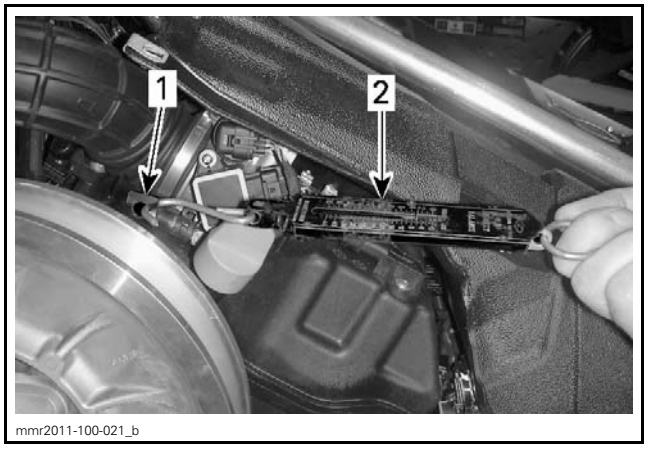


*1. Preload tester*
*2. Fish scale*

6. Pull the preload tester using the fish scale, then read the torsion force as follows:
   - 6.1 Take a 1st measurement when sliding sheave begins to turn.
   - 6.2 Hold fish scale in this position.
   - 6.3 Slowly release tension and take a 2nd measurement when sliding sheave begins to return.

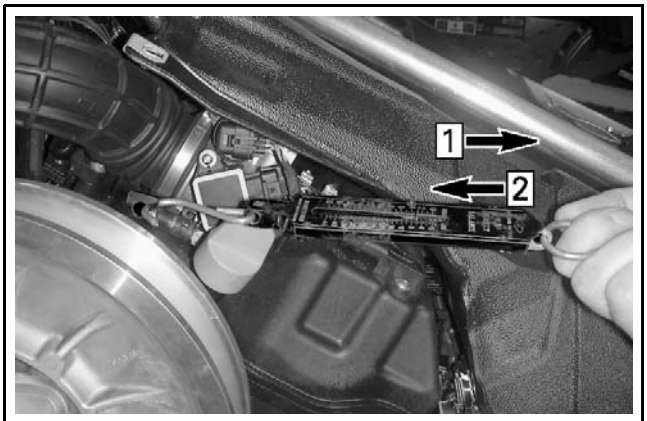


*Step 1: 1st measurement*
*Step 2: 2nd measurement*

7. Calculate the average of the two readings.

$$\frac{1^{ST}\ \text{MEASUREMENT (WHEN OPENING)} + 2^{ND}\ \text{MEASUREMENT (WHEN CLOSING)}}{2} = \text{SPRING PRELOAD}$$

Example:

$$\frac{\text{6.8 KG (15 LB) (WHEN OPENING)} + \text{6.4 KG (14 LB) (WHEN CLOSING)}}{2} = \text{6.6 KG (15 LB) ACTUAL SPRING PRELOAD}$$

8. Compare the result to the specifications.

| ENGINE | SPRING COLOUR | SPRING PRELOAD SPECIFICATION | |
|---|---|---|---|
| 600 ACE | Red/Red | Minimum | 6.6 kg (15 lb) |
| | | Maximum | 7.3 kg (16 lb) |
| 900 ACE | Beige/Beige | Minimum | 6.4 kg (14 lb) |
| | | Maximum | 7.0 kg (15 lb) |
| | Red/Red | Minimum | 6.6 kg (15 lb) |
| | | Maximum | 7.3 kg (16 lb) |

If spring preload is out of specification, move the spring hook in another cam hole to increase or decrease preload.

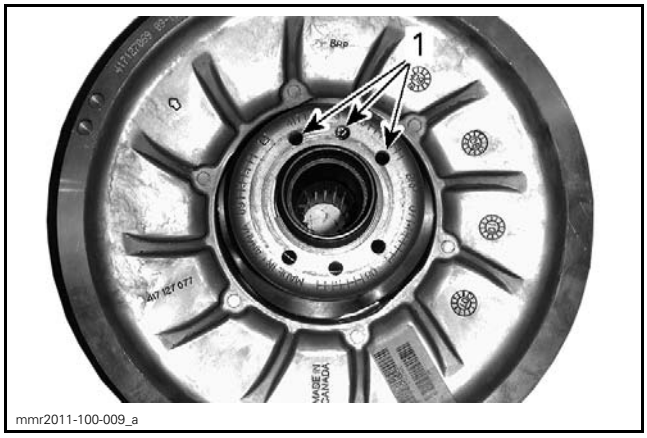


*1. Spring holes*

If correct spring preload is unattainable, use the fixed sheave holes.

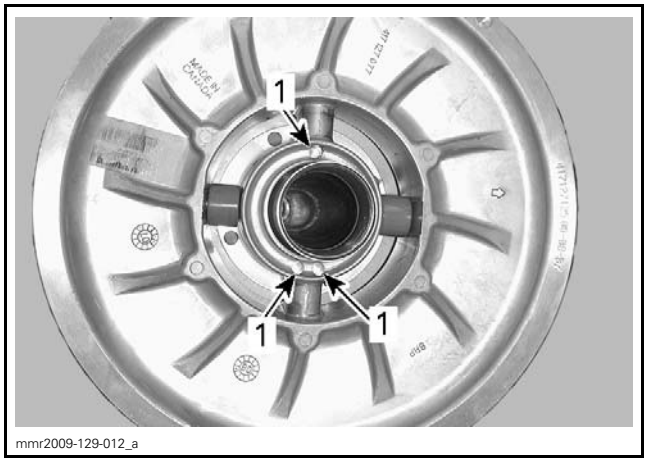


*TYPICAL*
*1. Fixed sheave holes*

## Removing the Driven Pulley

### Models with Hi/Lo Gearbox

NOTE: The driven pulley is removed with the countershaft.

1. Remove the drive belt. Refer to *DRIVE BELT* subsection.
2. Behind driven pulley, remove nut securing the countershaft bearing flange.

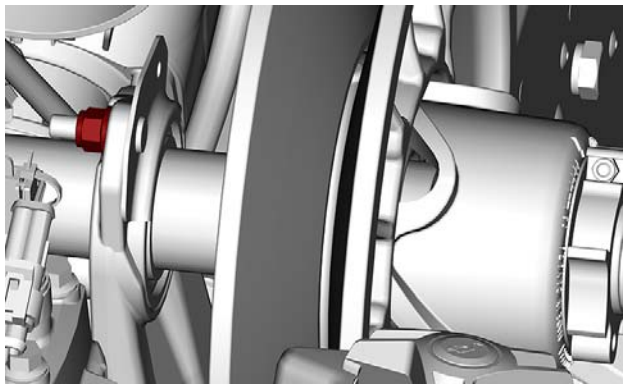
mmr2017-041-004

3. Pull out bearing flange.
4. Use the bearing puller to extract the bearing from the support.

| REQUIRED TOOL | |
|---|---|
| BEARING PULLER DRIVEN SUPPORT (P/N 529 036 485) |  |

5. Pull the driven pulley to disengage countershaft and upper gear.

### Models with Standard Gearbox

**NOTE:** The driven pulley is removed with the countershaft.

1. Remove the muffler. Refer to *EXHAUST SYSTEM* subsection.
2. Remove the filling plug on the chaincase cover.

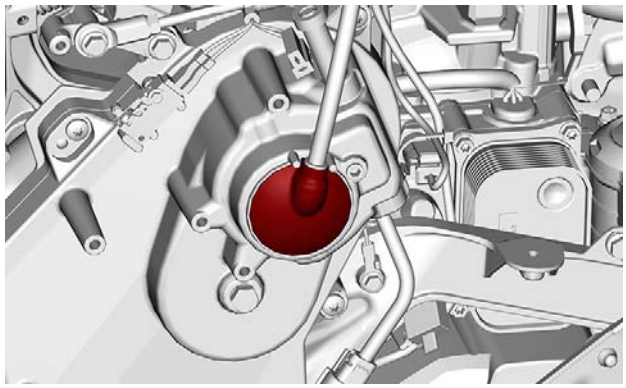
219100985-019-001

3. Release drive chain tension by unscrewing tensioner adjustment screw.

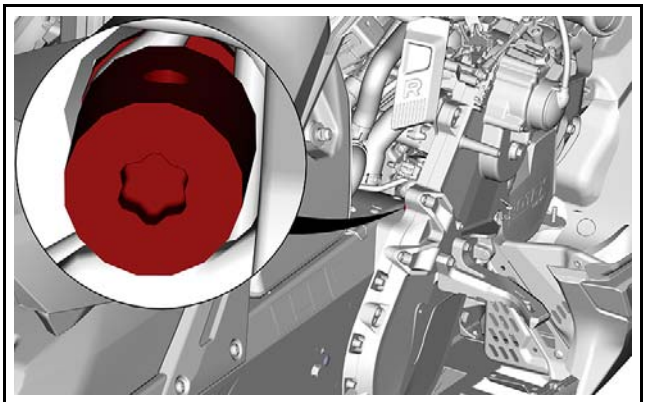
219100985-019-002

4. Remove the upper gear screw and the cap.

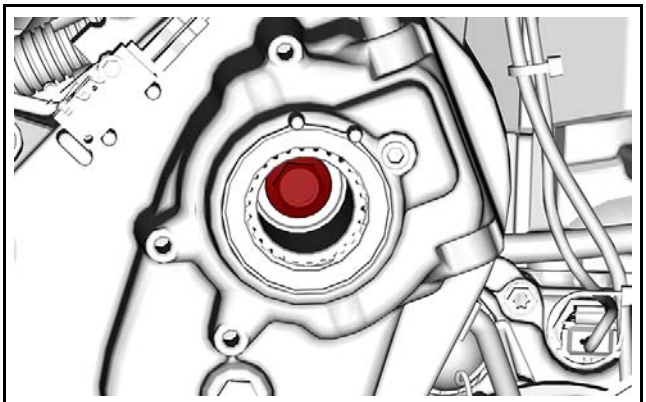
219100985-019-003

5. Thread a M10 x 1.5 x 80 mm screw through the cap, the gear and in the countershaft.
6. Remove the drive belt. Refer to *DRIVE BELT* subsection.
7. Behind driven pulley, remove nut securing the countershaft bearing flange.

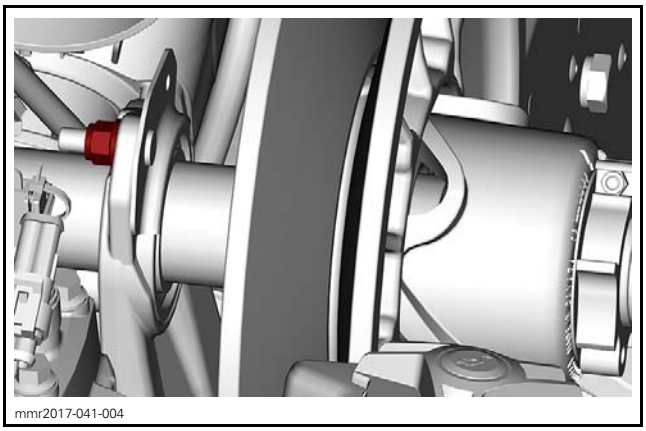
mmr2017-041-004

8. Pull out bearing flange.
9. Use the bearing puller to extract the bearing from the support.

| REQUIRED TOOL | |
|---|---|
| BEARING PULLER DRIVEN SUPPORT (P/N 529 036 485) |  |

10. Pull the driven pulley to disengage countershaft from upper gear.

NOTE: If necessary, tap the M10 screw with a plastic hammer.

11. Unscrew countershaft from the M10 screw. Leave the M10 screw in the chaincase in order to hold the gear in place.

## Driven Pulley Disassembly

### Removing Cam and Spring

1. Loosen the clamping screw.

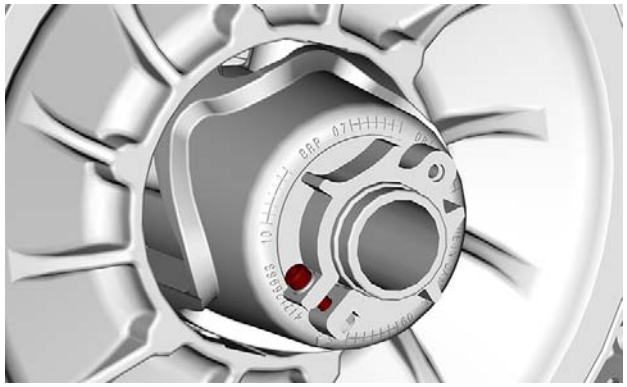
mmr2017-041-005

2. Unscrew the adjuster hub **clockwise** using the suspension adjustment tool provided in the vehicle tool kit.

NOTE: The adjuster hub has LH treads.

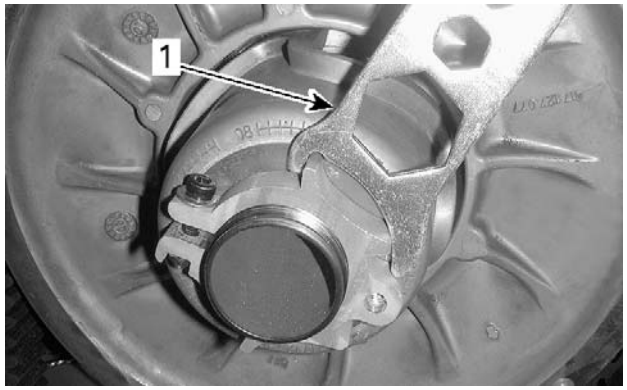

mmr2013-034-010_a

*1. Suspension adjustment tool shown*

| REQUIRED TOOL | |
|---|---|
| DRIVEN PULLEY SPRING COMPRESSOR (P/N 529 036 182) |  |

3. Install the threaded adapter of the spring compressor on the countershaft.

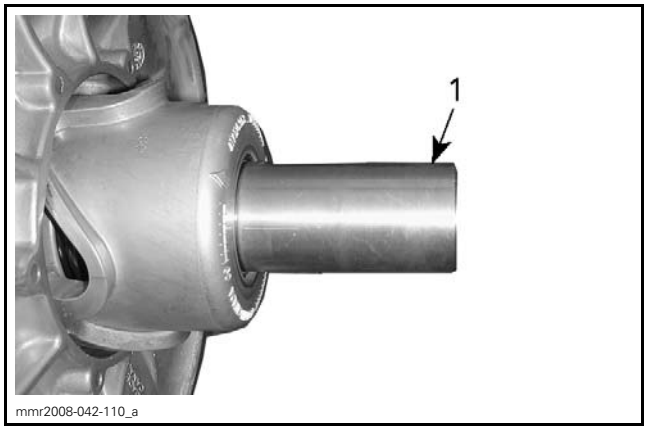

mmr2008-042-110_a

*1. Threaded adapter*

4. Install the external sleeve over the threaded adapter and secure sleeve with the tool screw.

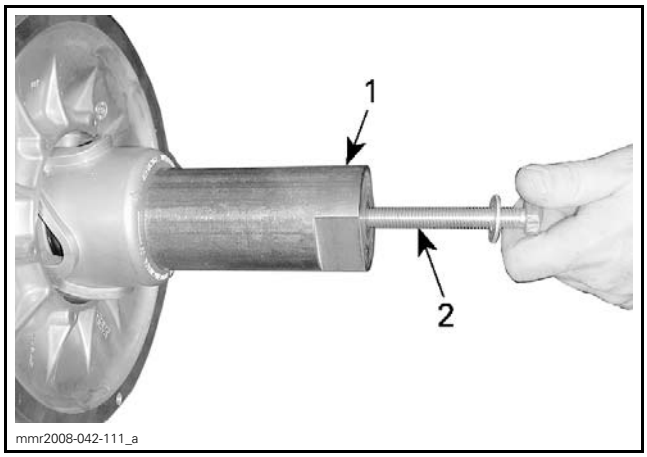

mmr2008-042-111_a

*1. External sleeve*
*2. Driven pulley spring compressor screw*

5. Tighten the tool screw to compress the cam.
6. Install the tool in a vice.

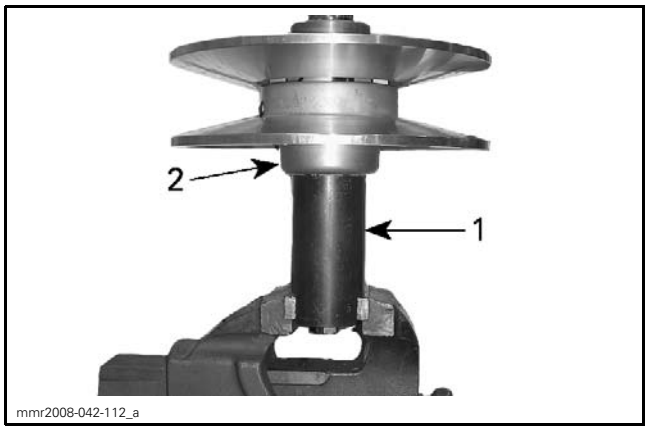


1. *Driven pulley spring compressor*
2. *Driven pulley*

7. Using a heat gun, heat cam screws to break the thread locker.

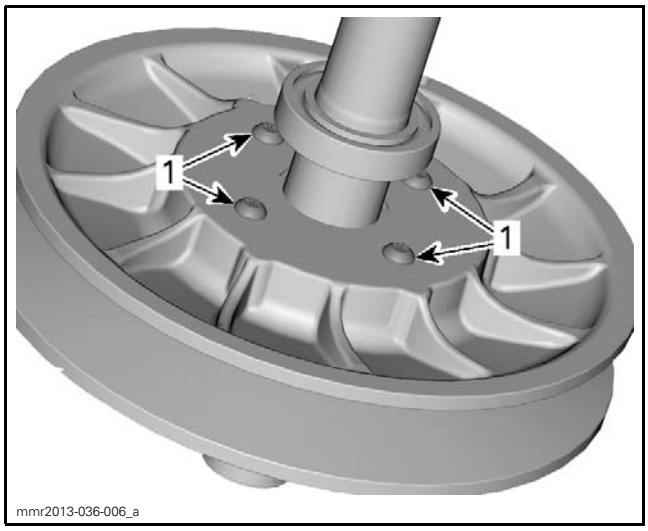


1. *Heat cam screws*

8. Remove and discard cam screws.
9. Unscrew the tool screw completely.

If equipped with preload spring, take note of the spring end positions in the cam and the pulley sheave for reinstallation.

10. Remove cam, spring stoppers and spring.

### Removing the Sliding Sheave

1. Remove the cam and spring. Refer to procedure in this subsection.
2. Remove the countershaft bearing. Refer to procedure in this subsection.
3. Remove sliding sheave.

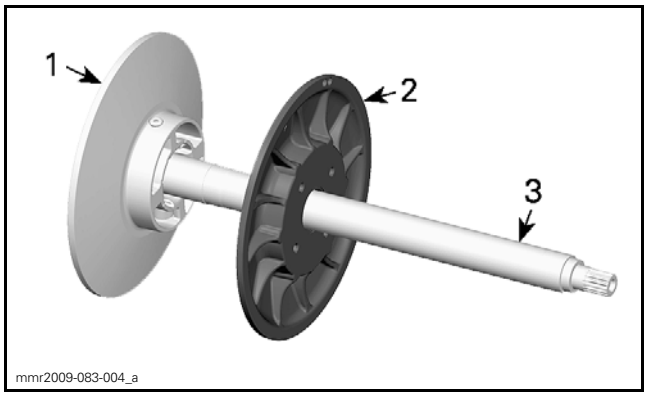


1. *Fixed sheave*
2. *Sliding sheave*
3. *Countershaft*

### Removing the Fixed Sheave

The fixed sheave and countershaft are sold as an assembly. They are not available separately.

### Removing the Driven Pulley Rollers

1. Move sliding and fixed sheaves apart.
2. Remove spring pins used to lock pivot screws.
   - 2.1 Use tap wrench to start removing spring pin.
   - 2.2 Once spring pin is accessible to pliers, pull pin out using pliers.

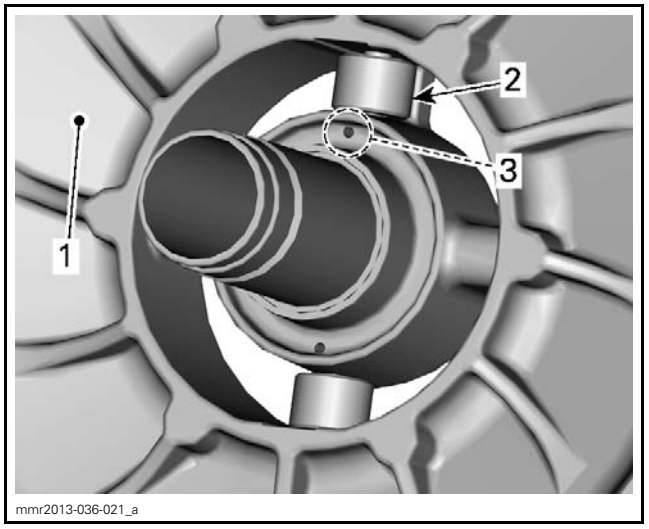


1. *Fixed sheave outer face*
2. *Roller*
3. *Spring pin location*

3. Identify pivot screws location before removal.
4. Remove pivot screw and ribbed lock washer; **keep both for reuse**.

***NOTICE*** **Make sure not to damage or lose pivot screws. If screws need to be replaced, replace fixed sheave assembly.**

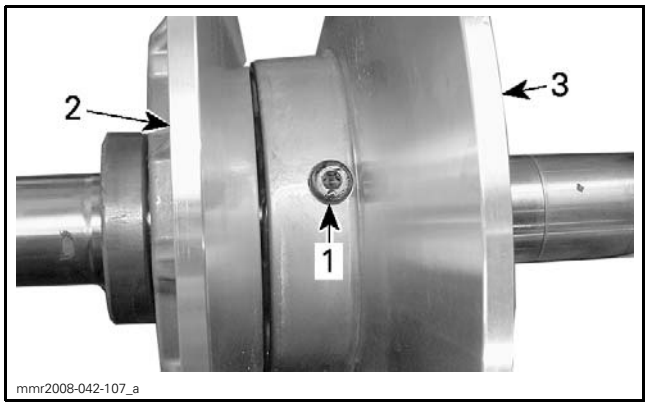


*1. Pivot screw*
*2. Sliding sheave*
*3. Fixed sheave*




*PIVOT SCREW REMOVAL*

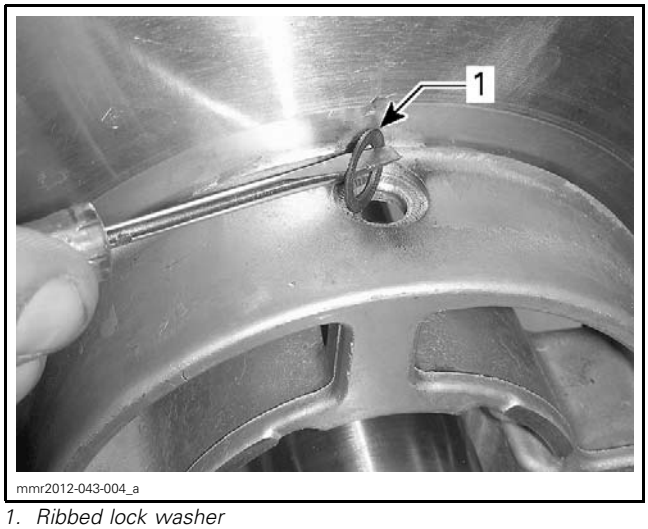


*1. Ribbed lock washer*

5. Remove roller.
6. Proceed with removal of other roller.

IMPORTANT: For proper fit, each pivot screw must be reinstalled where originally mounted in the fixed sheave.

## Inspecting the Driven Pulley

### Inspecting Cam and Spring

1. Verify contact surfaces of cam for visible damages. Ensure circlip properly locks the inner bushing. Replace part if necessary.
2. Using a dial bore gauge, measure the inner diameter of cam bushing. Measuring point must be at least 5 mm (1/4 in) from bushing edge.

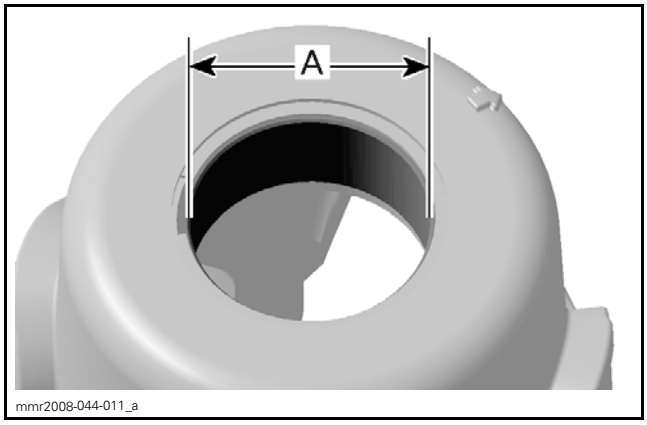


*A. Inner diameter of cam bushing*

| CAM BUSHING | SERVICE LIMIT |
|---|---|
| Inner diameter | 41.5 mm (1.634 in) |

3. Replace the cam if the inner diameter of bushing is out of specification.

### Inspecting the Sliding Sheave

1. Inspect pulley sheave for marks or scratches.
2. Ensure circlip properly locks the inner bushing. Replace part if necessary.
3. Using a dial bore gauge, measure the inner diameter of sliding sheave bushing. Measuring point must be at least 5 mm (1/4 in) from bushing edge.

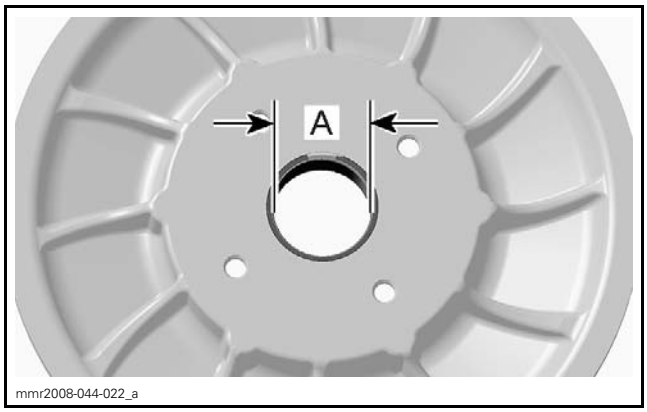


*A. Inner diameter of sliding sheave bushing*

| SLIDING SHEAVE BUSHING | SERVICE LIMIT |
|---|---|
| Inner diameter | 41.5 mm (1.634 in) |

4. Replace the sliding sheave if the inner diameter of bushing is out of specification.

### Inspecting the Fixed Sheave

Replace fixed sheave and countershaft if one of the following problem is detected:
- Marks or scratches on pulley sheave
- Bent, twisted or otherwise damaged countershaft
- Defective splines and threads at the end of countershaft.

### Inspecting the Driven Pulley Roller

1. Check the rollers for flat spots, cracks or other visible damages. Replace if necessary (as a set).
2. Measure inner and outer diameter of rollers.

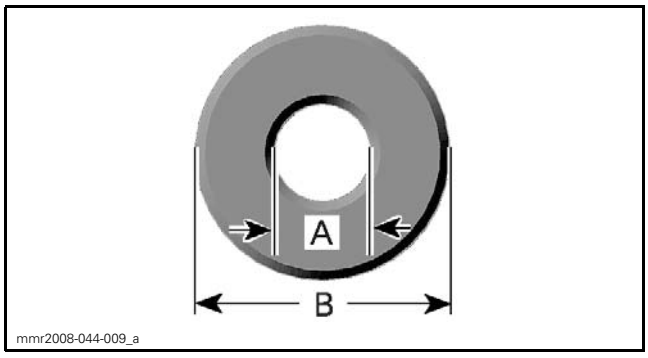


*A. Inner diameter*
*B. Outer diameter*

| DRIVEN PULLEY ROLLER | SERVICE LIMIT |
|---|---|
| Inner diameter | 8.5 mm (.335 in) |
| Outer diameter | 21.5 mm (.846 in) |

3. Measure the roller thickness.

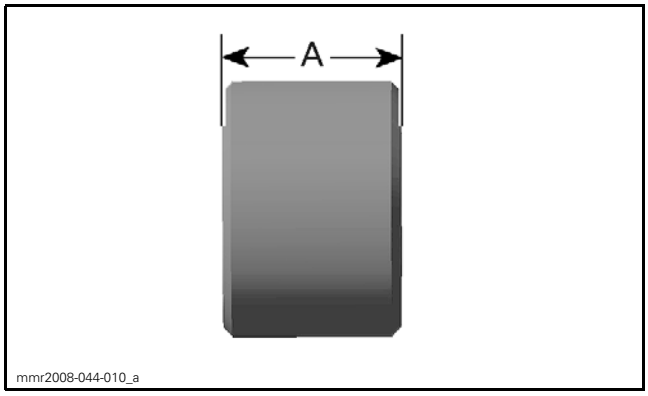


*A. Thickness of roller*

| DRIVEN PULLEY ROLLER | SERVICE LIMIT |
|---|---|
| Thickness | 14.75 mm (.581 in) |

4. If a roller is out of specifications, replace both rollers at the same time.

## Cleaning the Driven Pulley

Use the a clean rag to clean pulley sheaves.

| SERVICE PRODUCT | |
|---|---|
| Scandinavia | PULLEY FLANGE CLEANER (F) (P/N 619 600 022) |
| Other Countries | CLUTCH AND PULLEY FLANGE CLEANER PRO S1 (P/N 779244) |

### Cleaning Cam and Spring

During break-in period, teflon from bushing moves to cam or countershaft surface. A teflon over teflon running condition occurs, leading to low friction. So it is normal to see gray teflon deposit on cam or countershaft. Do not remove this deposit.

When a dust deposit has to be removed from the cam or the countershaft, use dry cloth to avoid removing transferred teflon.

## Driven Pulley Assembly

### Installing the Driven Pulley Roller

NOTE: Exceptionally, do NOT clean threaded hole to avoid changing the screw position when torqued.

1. Using a hand wire brush, clean pivot screw threads.

IMPORTANT: Do not use a thread die to clean pivot screw of threadlocker as this may alter the screw threads.

NOTE: Pivot screw and ribbed lock washer must be reused if in good condition. If damaged, replace fixed sheave assembly.

2. Apply the following threadlocker to the pivot screw threads.

| SERVICE PRODUCT | |
|---|---|
| Pivot screw threads | LOCTITE 243 (BLUE) (P/N 293 800 060) |

3. Insert roller in fixed sheave, thread in pivot screw with ribbed lock washer.

NOTE: The ribbed lock washer must be installed with the concave side towards the fixed sheave.

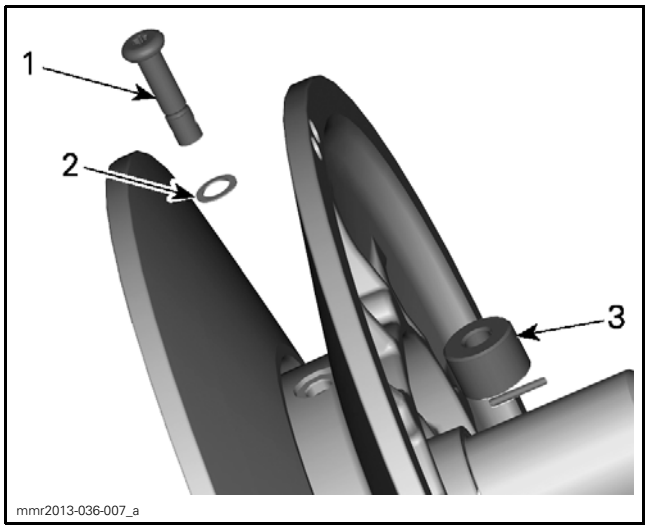


*1. Pivot screw*
*2. Ribbed lock washer (concave side towards fixed sheave)*
*3. Roller*

IMPORTANT: For proper fit, each pivot screw must be reinstalled where originally mounted in the fixed sheave.

4. Tighten pivot screw as specified.

| TIGHTENING TORQUE | |
|---|---|
| Pivot screws | 17 N•m ± 1 N•m (150 lbf•**in** ± 9 lbf•**in**) |

NOTE: Spring pin hole in the fixed sheave and pivot screw must perfectly line up when tighten torque is applied.

***NOTICE*** **If not properly aligned, spring pin will not insert in pivot screw hole and spring pin threads in fixed sheave will be damaged.**

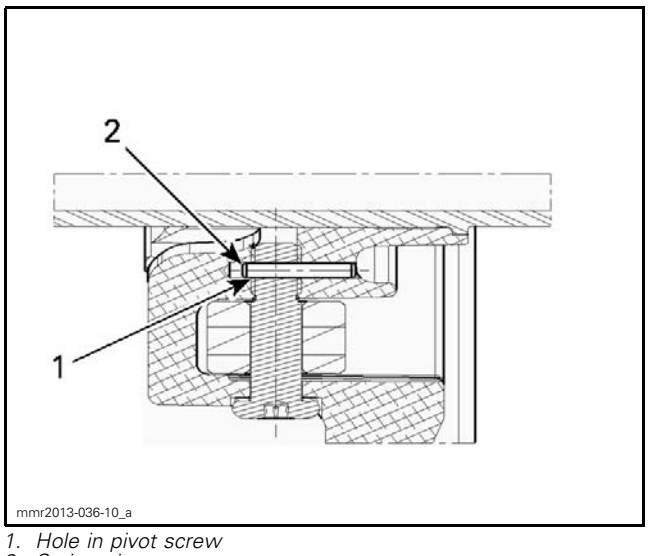


*1. Hole in pivot screw*
*2. Spring pin*

5. Install spring pin.

### Installing Cam and Spring

1. Install a spring stopper, the spring, the other spring stopper and the cam.

If equipped with preload spring, make sure both spring ends are correctly indexed in the cam and the pulley sheave.

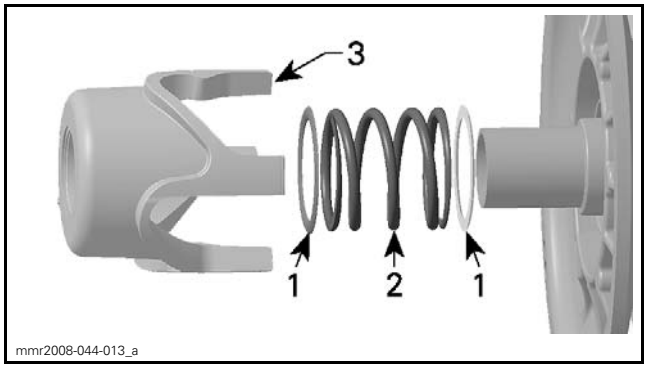


*1. Spring stopper*
*2. Spring*
*3. Cam*

2. Align the arrow on the cam with the arrow on the fixed sheave.

NOTE: On completion of cam installation, the arrow on the cam should have moved clockwise (approximately 30°).




3. Install the driven pulley spring compressor sleeve and tighten the tool screw until the cam is completely pressed against the sliding sheave.
4. Apply threadlocker on the thread of 4 new cam screws.

| RECOMMENDED SERVICE PRODUCT |
|---|
| LOCTITE 648 (GREEN) (P/N 413 711 400) |

5. From the back of the sliding sheave, install 4 new cam screws.
6. Tighten cam screws to specification.

| TIGHTENING TORQUE | |
|---|---|
| Cam screw | 31.5 N•m ± 3.5 N•m (23 lbf•ft ± 3 lbf•ft) + LOCTITE 648 (GREEN) (P/N 413 711 400) |

7. Remove the tool.

### Installing the Sliding Sheave

The assembly of the sliding sheave is the reverse of the disassembly. However, pay attention to the following.

When installing sliding sheave, make sure to align its arrow with the arrow on cam.

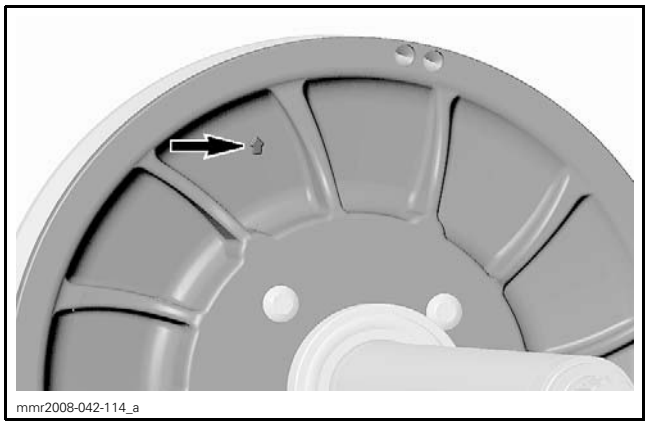
mmr2008-042-114_a

*SLIDING SHEAVE ARROW*


mmr2008-044-014_b

*CAM ARROW*

## Installing the Driven Pulley

### Models with Hi/Lo Gearbox

1. Using sand paper (600-grit or 1000-grit) or steel wool, remove any rust on bearing shoulder of countershaft bearing support.

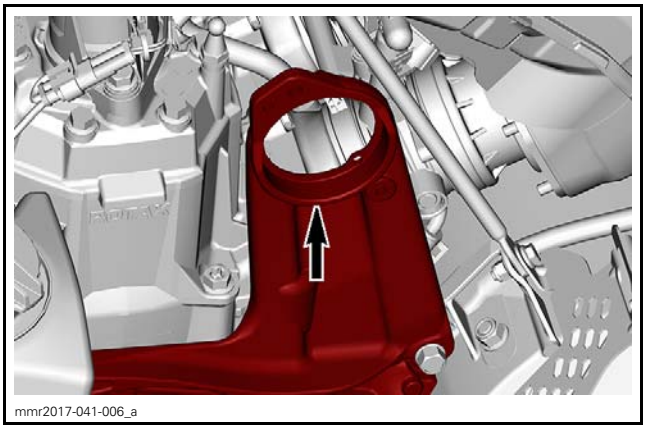
mmr2017-041-006_a

*BEARING SUPPORT SHOULDER*

2. Apply a thin layer of antiseize lubricant on bearing shoulder.

| SERVICE PRODUCT |
|---|
| LOCTITE 767 (ANTI-SEIZE LUBRICANT) (P/N 293 800 070) |

3. Insert countershaft through countershaft bearing support.
4. Align countershaft splines with upper gear splines.
5. On LH side, install the bearing flange. Tighten nut to specification.

| TIGHTENING TORQUE | |
|---|---|
| Bearing flange nut | 15.5 N•m ± 1.5 N•m (137 lbf•**in** ± 13 lbf•**in**) |

6. Install the adjuster hub onto the countershaft end and temporarily tighten.
7. Install and adjust drive belt. Refer to *DRIVE BELT* subsection.
8. Install all other removed parts.

### Models with Standard Gearbox

1. Using sand paper (600-grit or 1000-grit) or steel wool, remove any rust on bearing shoulder of countershaft bearing support.

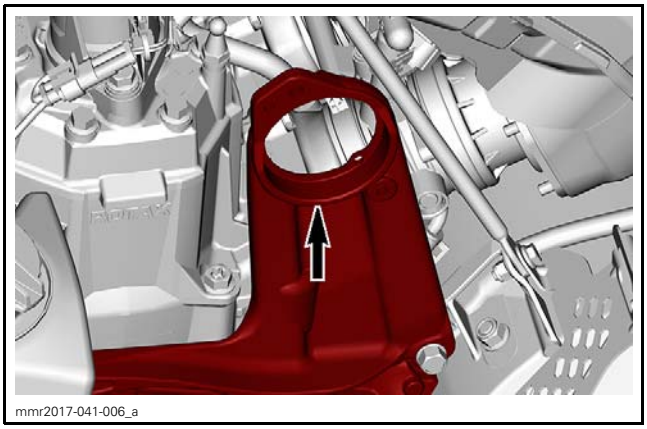


*BEARING SUPPORT SHOULDER*

2. Apply a thin layer of antiseize lubricant on bearing shoulder.

| SERVICE PRODUCT |
|---|
| LOCTITE 767 (ANTI-SEIZE LUBRICANT) (P/N 293 800 070) |

3. Insert countershaft through countershaft bearing support.
4. Fasten the M10 x 1.5 x 80 mm screw to the end of countershaft.
5. Align countershaft splines with upper gear splines.
6. Using the M10 screw as a puller, engage countershaft splines in upper gear splines. Ensure countershaft bearing is installed properly in countershaft bearing support.
7. Remove the M10 screw.
8. Install the upper gear screw and the cap.
9. Tighten upper gear screw to specification.

| TIGHTENING TORQUE | |
|---|---|
| Upper gear screw | 48 N•m ± 6 N•m (35 lbf•ft ± 4 lbf•ft) |

10. Install chaincase filler plug.
11. Install the bearing flange. Tighten nut to specification.

| TIGHTENING TORQUE | |
|---|---|
| Bearing flange nut | 15.5 N•m ± 1.5 N•m (137 lbf•**in** ± 13 lbf•**in**) |

12. Install the adjuster hub onto the countershaft end and temporarily tighten.
13. Install and adjust drive belt. Refer to *DRIVE BELT* subsection.
14. Install all other removed parts.

# COUNTERSHAFT

The countershaft and the fixed sheave are sold as an assembly. They are not available separately.

## Removing and Installing the Countershaft

Refer to *DRIVEN PULLEY* in this subsection for the procedures.

# COUNTERSHAFT BEARING

## Removing the Countershaft Bearing

Remove the driven pulley. Refer to procedure in this subsection.

Install the bearing remover on countershaft.

| REQUIRED TOOL | |
|---|---|
| COUNTERSHAFT BEARING REMOVER (P/N 529 036 065) |  |
| 4 stroke COUNTERSHAFT ADAPTER (P/N 529 036 424) 2 stroke; DRIVEN ADAPTER (P/N 529 036 508) |  |

Tighten the screw at the end of tool to extract the bearing. Discard bearing.

## Installing the Countershaft Bearing

1. Remove the adjuster hub from the cam.
2. Insert the countershaft support in the countershaft.

| REQUIRED TOOL |
|---|
| COUNTERSHAFT SUPPORT (P/N 529 036 067) |

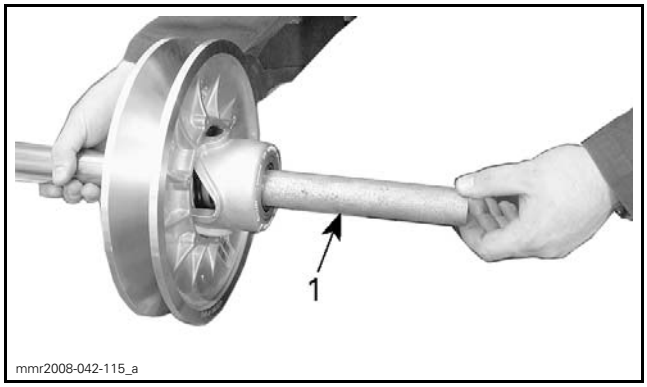


*1. Countershaft support*

**NOTICE** The countershaft support is mandatory to avoid damaging the countershaft threaded end and the cam during bearing installation.

3. Clean residues on countershaft bearing surface.

| SERVICE PRODUCT | |
|---|---|
| Scandinavia | PULLEY FLANGE CLEANER (F) (P/N 619 600 022) |
| Other Countries | CLUTCH AND PULLEY FLANGE CLEANER PRO S1 (P/N 779244) |

4. Check countershaft bearing surface for wear.
5. Apply Loctite 7649 on countershaft bearing surface and let dry 5 minutes.

| SERVICE PRODUCT | |
|---|---|
| Scandinavia | LOCTITE 7649 (F) (P/N 619 600 100) |
| Other Countries | LOCTITE 7649 (PRIMER) (P/N 293 800 041) |

6. Apply Loctite 609 on primer.

| SERVICE PRODUCT |
|---|
| LOCTITE 609 (P/N 413 703 100) |

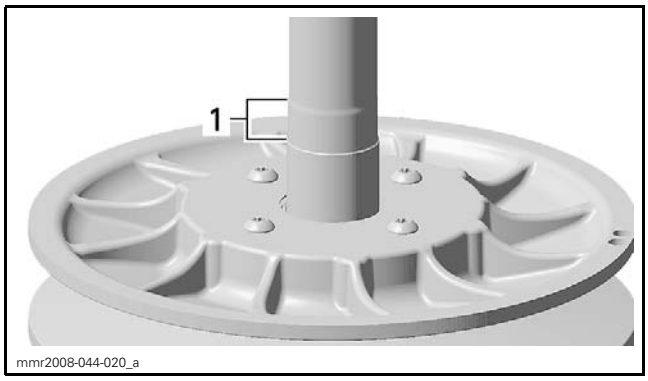


*1. Apply Loctite 7649 (Primer) before Loctite 609 in this region*

7. Using a press and the bearing installer, install the new bearing on countershaft.

| REQUIRED TOOL |
|---|
| COUNTERSHAFT BEARING INSTALLER (P/N 529 036 066) |

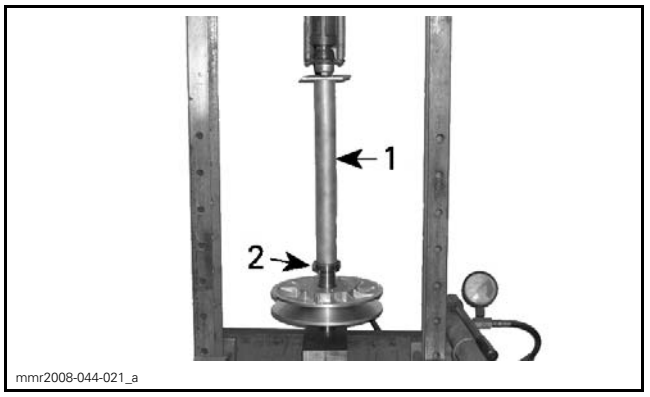


*1. Countershaft bearing installer*
*2. New bearing*

**NOTICE** Use a press only, never tap on countershaft bearing installer with an hammer to avoid damaging bearing and countershaft.

8. Clean the surplus Loctite with a rag to avoid having Loctite on sliding sheave bushing.

## COUNTERSHAFT BEARING SUPPORT

For countershaft bearing support removal and installation, refer to *COUNTERSHAFT BEARING SUPPORT* in *FRAME* subsection.

# DRIVEN PULLEY AND COUNTERSHAFT (E-TEC)

## SERVICE TOOLS


| Description | Part Number | Page |
|---|---|---|
| BEARING PULLER DRIVEN SUPPORT | 529 036 485 | 413–414 |
| COUNTERSHAFT ADAPTER | 529 036 424 | 421 |
| COUNTERSHAFT BEARING INSTALLER | 529 036 066 | 422 |
| COUNTERSHAFT BEARING REMOVER | 529 036 065 | 421 |
| COUNTERSHAFT SUPPORT | 529 036 067 | 421 |
| DRIVEN ADAPTER | 529 036 508 | 421 |
| DRIVEN PULLEY SPRING COMPRESSOR | 529 036 182 | 415 |
| UPPER GEAR RETAINING TOOL | 529 036 110 | 414 |


## SERVICE PRODUCTS


| Description | Part Number | Page |
|---|---|---|
| CLUTCH AND PULLEY FLANGE CLEANER PRO S1 | 779244 | 418, 422 |
| LOCTITE 243 (BLUE) | 293 800 060 | 418 |
| LOCTITE 609 | 413 703 100 | 422 |
| LOCTITE 648 (GREEN) | 413 711 400 | 419–420 |
| LOCTITE 7649 (F) | 619 600 100 | 422 |
| LOCTITE 7649 (PRIMER) | 293 800 041 | 422 |
| LOCTITE 767 (ANTI-SEIZE LUBRICANT) | 293 800 070 | 420–421 |
| PULLEY FLANGE CLEANER (F) | 619 600 022 | 418, 422 |

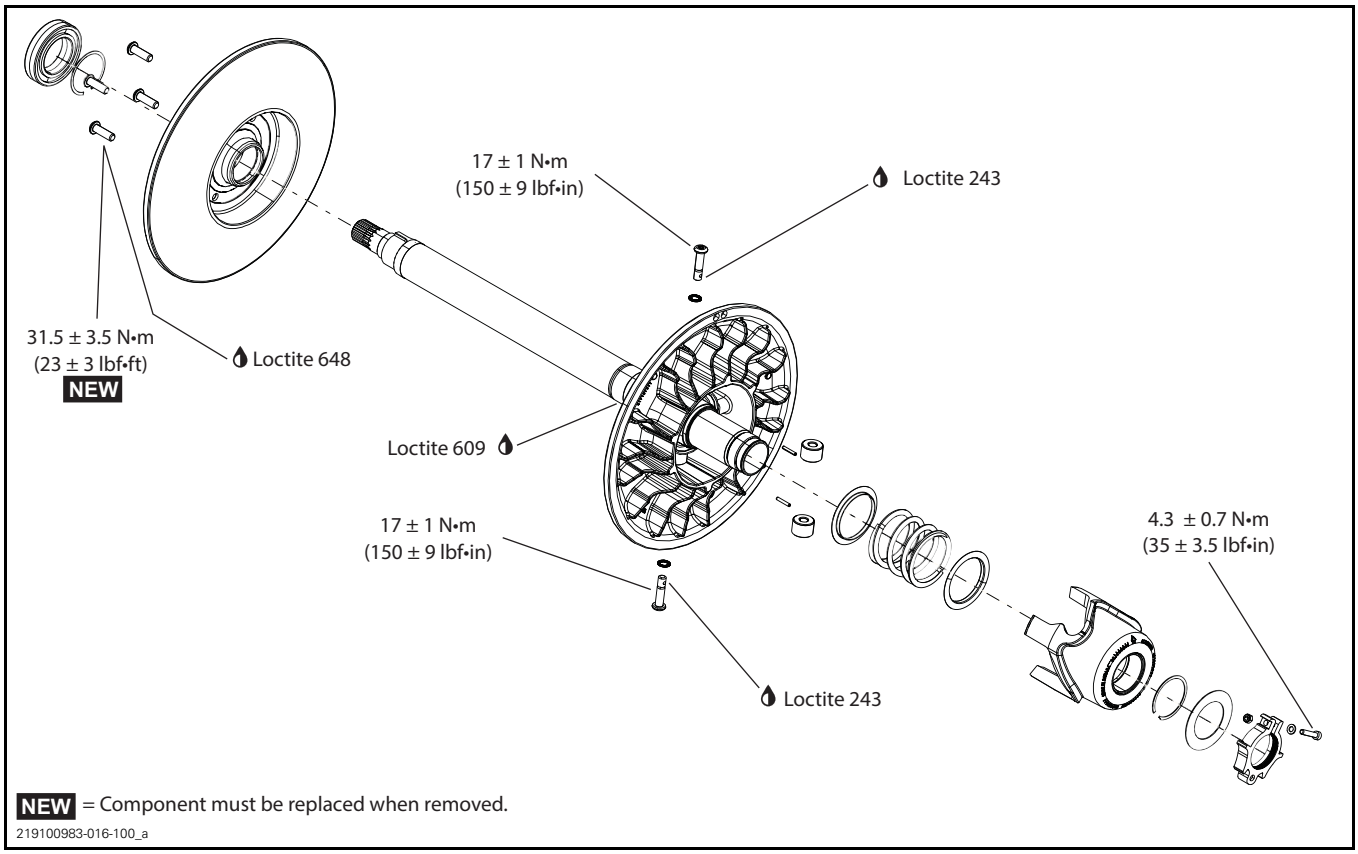
17 ± 1 N•m
(150 ± 9 lbf•in)
Loctite 243
31.5 ± 3.5 N•m
(23 ± 3 lbf•ft)
NEW
Loctite 648
Loctite 609
17 ± 1 N•m
(150 ± 9 lbf•in)
4.3 ± 0.7 N•m
(35 ± 3.5 lbf•in)
Loctite 243
NEW = Component must be replaced when removed.
219100983-016-100_a

# GENERAL

During assembly/installation, use the tightening torque values and the service products as in the exploded views.

Clean threads before applying a threadlocker. Refer to *SELF-LOCKING FASTENERS* and *LOCTITE APPLICATION* at the beginning of this manual for complete procedure.

**⚠ WARNING**

**Torque wrench tightening specifications must be strictly adhered to.**
**Locking devices (e.g.: locking tabs, elastic stop nuts, cotter pins, etc.) must be replaced with new ones.**

**⚠ WARNING**

**Never start engine when the pulley guard is removed.**

# PROCEDURES

## DRIVEN PULLEY

### Removing the Driven Pulley

#### Models with Hi/Lo Gearbox

NOTE: The driven pulley is removed with the countershaft.

1. Remove the drive belt. Refer to *DRIVE BELT* subsection.
2. Behind driven pulley, remove nut securing the countershaft bearing flange.

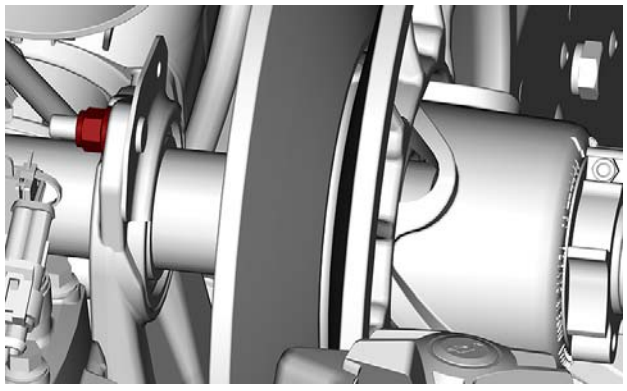
mmr2017-041-004

3. Pull out bearing flange.
4. Use the bearing puller to extract the bearing from the support.

| REQUIRED TOOL | |
|---|---|
| BEARING PULLER DRIVEN SUPPORT (P/N 529 036 485) |  |

5. Pull the driven pulley to disengage countershaft and upper gear.

#### Models with Chaincase

NOTE: The driven pulley is removed with the countershaft.

1. Remove the muffler. Refer to *EXHAUST SYSTEM* subsection.
2. Remove the filling plug on the chaincase cover.

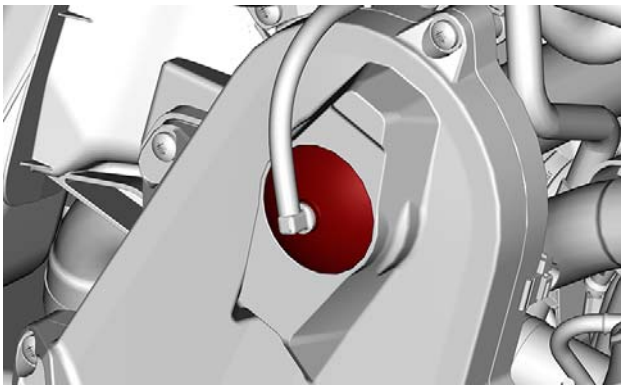
mmr2017-041-001

3. Release drive chain tension by unscrewing tensioner adjustment screw.

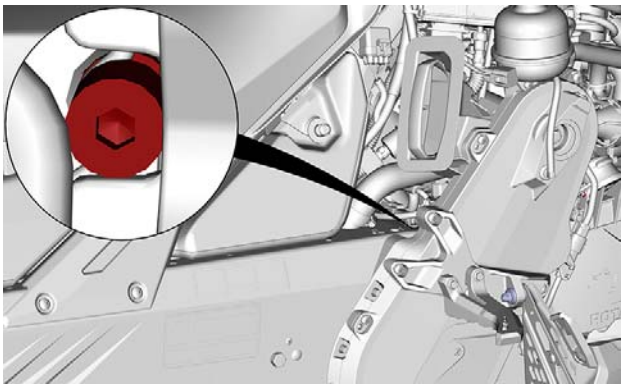
mmr2017-041-002

4. Remove the upper gear screw and the conical spring washer.

NOTE: Slightly tilt the bolt to avoid dropping washer inside chaincase.

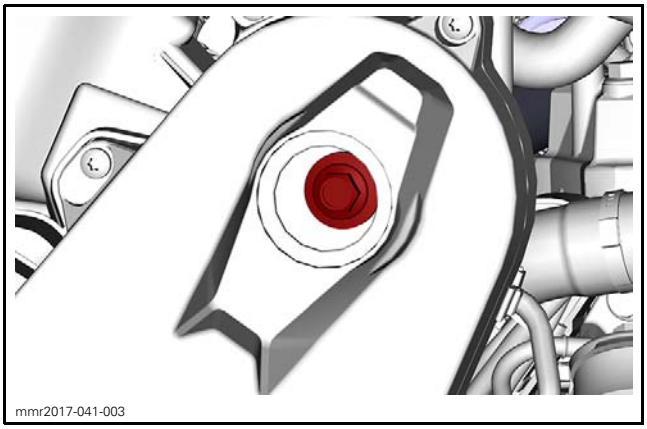
mmr2017-041-003

5. Install the gear retaining tool on countershaft end.

| REQUIRED TOOL | |
|---|---|
| UPPER GEAR RETAINING TOOL (P/N 529 036 110) |  |

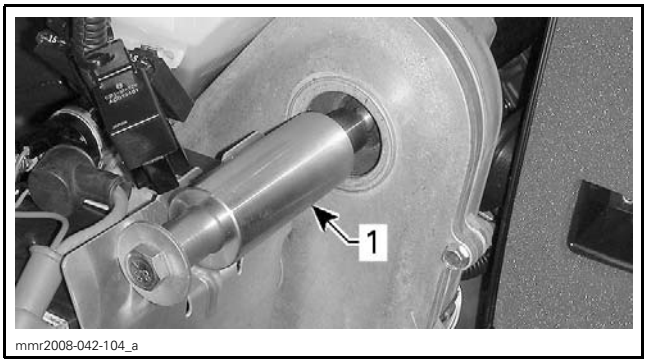

mmr2008-042-104_a

*TYPICAL*
*1. Upper gear retaining tool*

6. Remove the drive belt. Refer to *DRIVE BELT* subsection.
7. Behind driven pulley, remove nut securing the countershaft bearing flange.

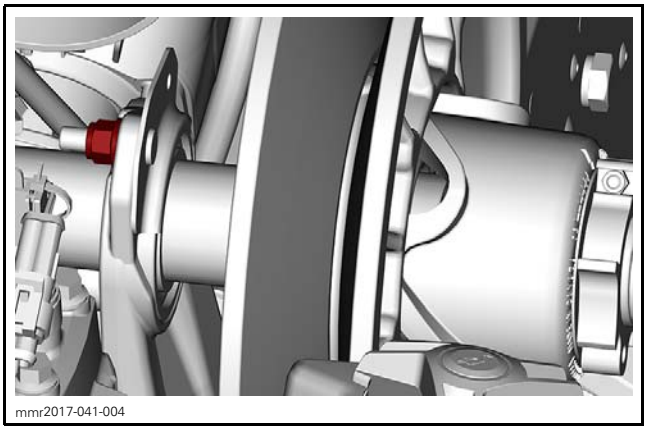
mmr2017-041-004

8. Pull out bearing flange.
9. Use the bearing puller to extract the bearing from the support.

| REQUIRED TOOL | |
|---|---|
| BEARING PULLER DRIVEN SUPPORT (P/N 529 036 485) |  |

10. Pull the driven pulley to disengage countershaft and upper gear.

NOTE: If necessary, tap the upper gear retaining tool with a plastic hammer.

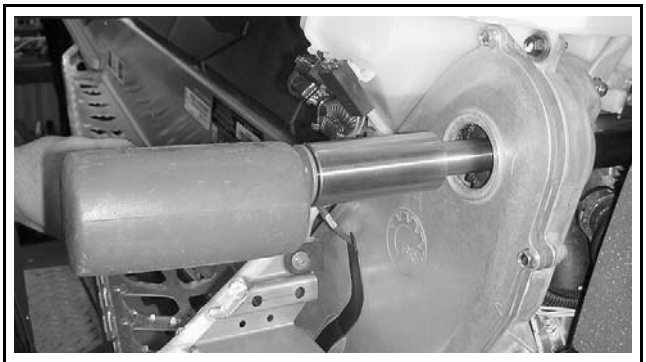
mmr2008-042-106

*TYPICAL*

11. Unscrew countershaft from the upper gear retaining tool. **Do not** remove tool.

NOTE: While countershaft is removed from vehicle, the upper gear retaining tool maintains the drive chain and the upper gear in position inside chaincase.

## Driven Pulley Disassembly

### Removing Cam and Spring

1. Loosen the clamping screw.

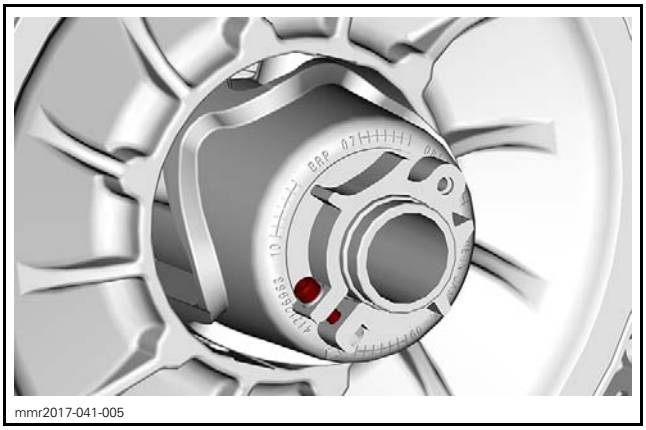
mmr2017-041-005

2. Unscrew the adjuster hub **clockwise** using the suspension adjustment tool provided in the vehicle tool kit.

NOTE: The adjuster hub has LH treads.

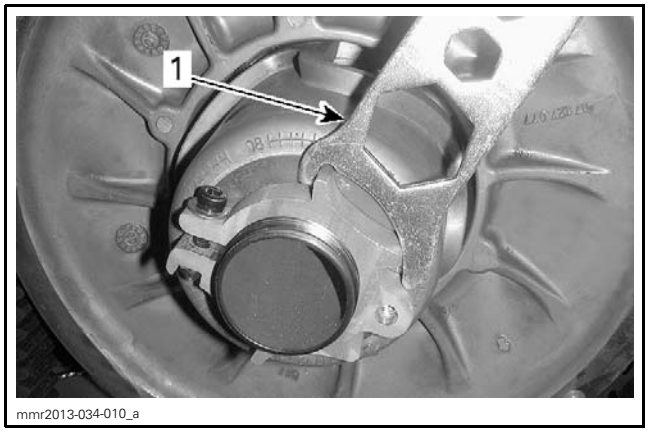


*1. Suspension adjustment tool shown*

| REQUIRED TOOL | |
|---|---|
| DRIVEN PULLEY SPRING COMPRESSOR (P/N 529 036 182) |  |

3. Install the threaded adapter of the spring compressor on the countershaft.

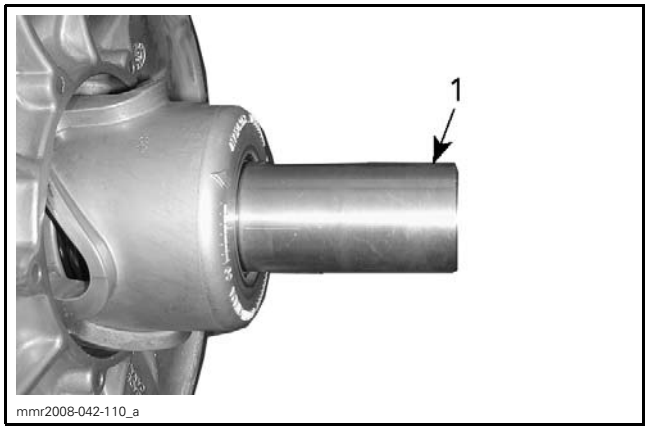


*1. Threaded adapter*

4. Install the external sleeve over the threaded adapter and secure sleeve with the tool screw.

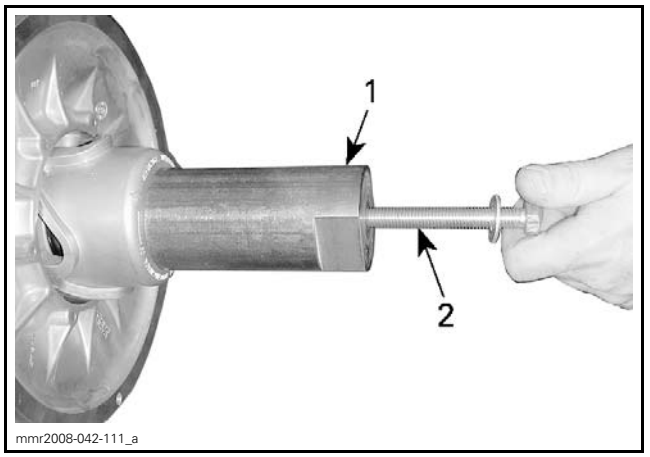


*1. External sleeve*
*2. Driven pulley spring compressor screw*

5. Tighten the tool screw to compress the cam.
6. Install the tool in a vice.

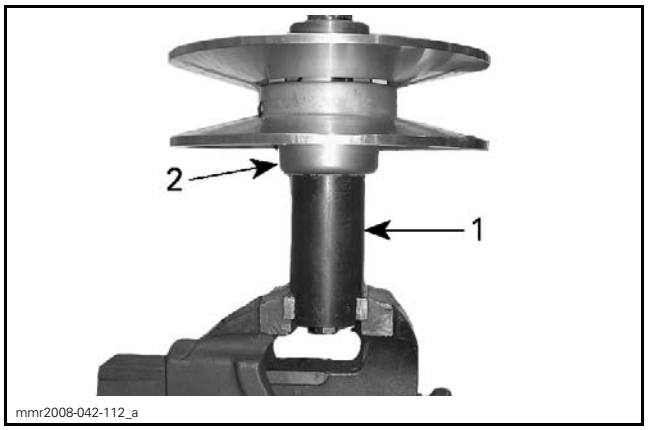


*1. Driven pulley spring compressor*
*2. Driven pulley*

7. Using a heat gun, heat cam screws to break the thread locker.

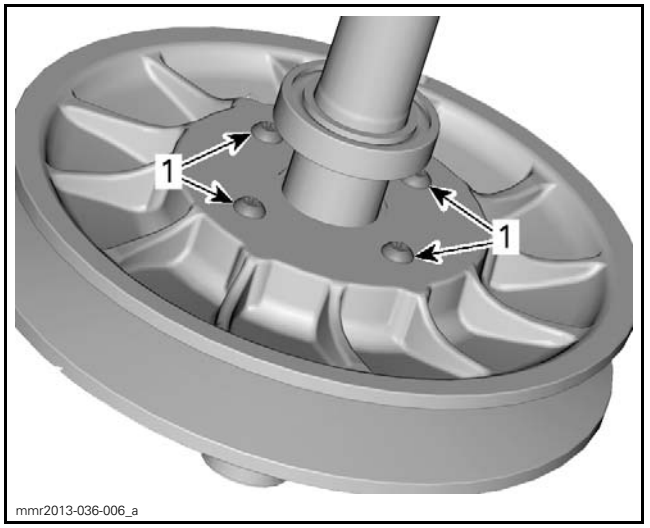


*1. Heat cam screws*

8. Remove and discard cam screws.

9. Unscrew the tool screw completely.
10. Remove cam, spring stoppers and spring.

### Removing the Sliding Sheave

1. Remove the cam and spring. Refer to procedure in this subsection.
2. Remove the countershaft bearing. Refer to procedure in this subsection.
3. Remove sliding sheave.

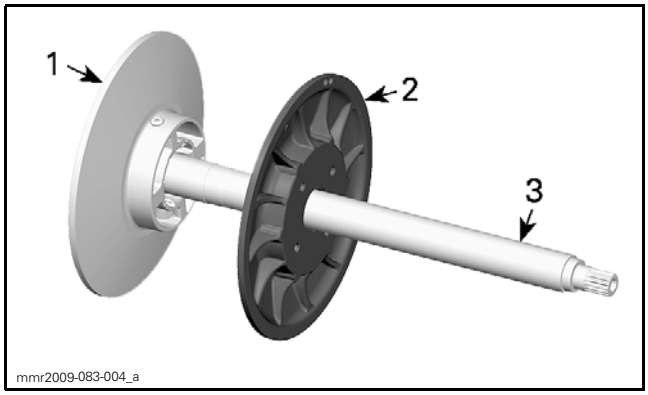


*1. Fixed sheave*
*2. Sliding sheave*
*3. Countershaft*

### Removing the Fixed Sheave

The fixed sheave and countershaft are sold as an assembly. They are not available separately.

### Removing the Driven Pulley Rollers

1. Move sliding and fixed sheaves apart.
2. Remove spring pins used to lock pivot screws.
   2.1 Use tap wrench to start removing spring pin.
   2.2 Once spring pin is accessible to pliers, pull pin out using pliers.

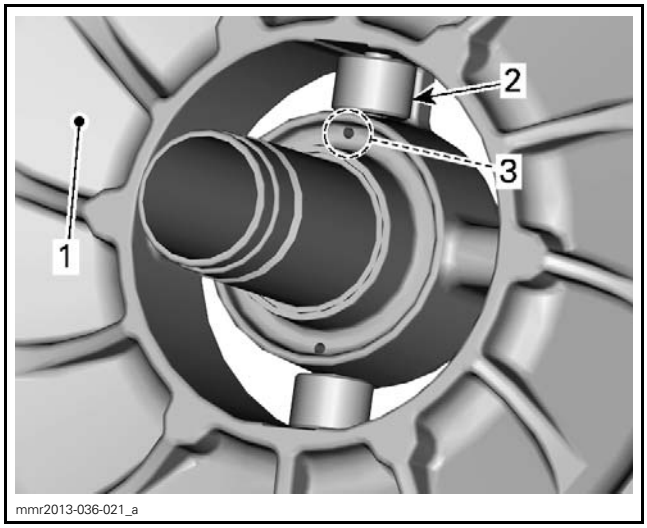


*1. Fixed sheave outer face*
*2. Roller*
*3. Spring pin location*

3. Identify pivot screws location before removal.
4. Remove pivot screw and ribbed lock washer; **keep both for reuse**.

***NOTICE*** **Make sure not to damage or lose pivot screws. If screws need to be replaced, replace fixed sheave assembly.**

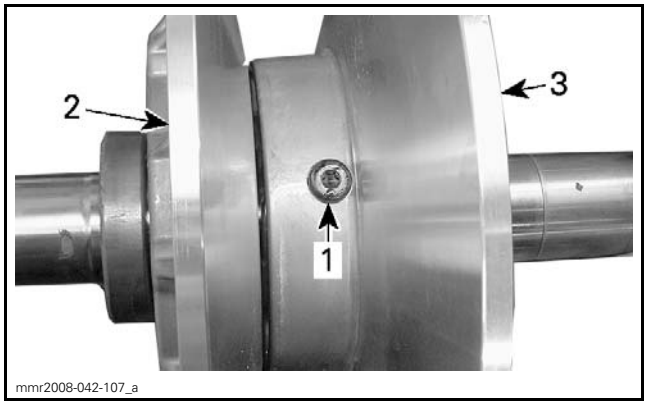


*1. Pivot screw*
*2. Sliding sheave*
*3. Fixed sheave*


mmr2012-043-003

*PIVOT SCREW REMOVAL*

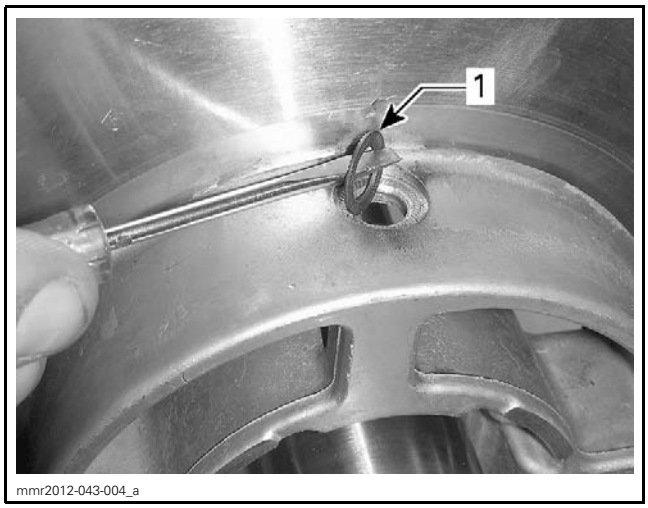

mmr2012-043-004_a

*1. Ribbed lock washer*

5. Remove roller.
6. Proceed with removal of other roller.

IMPORTANT: For proper fit, each pivot screw must be reinstalled where originally mounted in the fixed sheave.

## Inspecting the Driven Pulley

### Inspecting Cam and Spring

1. Verify contact surfaces of cam for visible damages. Ensure circlip properly locks the inner bushing. Replace part if necessary.
2. Using a dial bore gauge, measure the inner diameter of cam bushing. Measuring point must be at least 5 mm (1/4 in) from bushing edge.

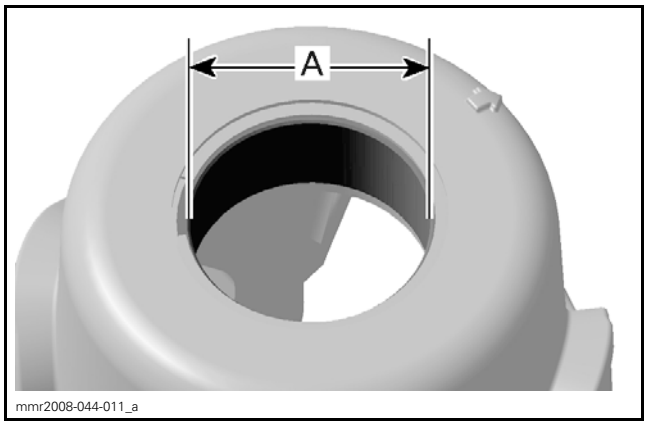

mmr2008-044-011_a

*A. Inner diameter of cam bushing*

| CAM BUSHING | SERVICE LIMIT |
|---|---|
| Inner diameter | 41.5 mm (1.634 in) |

3. Replace the cam if the inner diameter of bushing is out of specification.

### Inspecting the Sliding Sheave

1. Inspect pulley sheave for marks or scratches.
2. Ensure circlip properly locks the inner bushing. Replace part if necessary.
3. Using a dial bore gauge, measure the inner diameter of sliding sheave bushing. Measuring point must be at least 5 mm (1/4 in) from bushing edge.

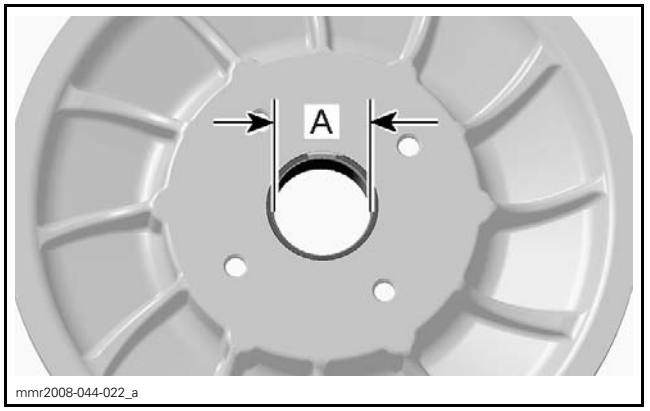

mmr2008-044-022_a

*A. Inner diameter of sliding sheave bushing*

| SLIDING SHEAVE BUSHING | SERVICE LIMIT |
|---|---|
| Inner diameter | 41.5 mm (1.634 in) |

4. Replace the sliding sheave if the inner diameter of bushing is out of specification.

### Inspecting the Fixed Sheave

Replace fixed sheave and countershaft if one of the following problem is detected:

– Marks or scratches on pulley sheave

– Bent, twisted or otherwise damaged countershaft
– Defective splines and threads at the end of countershaft.

### Inspecting the Driven Pulley Roller

1. Check the rollers for flat spots, cracks or other visible damages. Replace if necessary (as a set).
2. Measure inner and outer diameter of rollers.

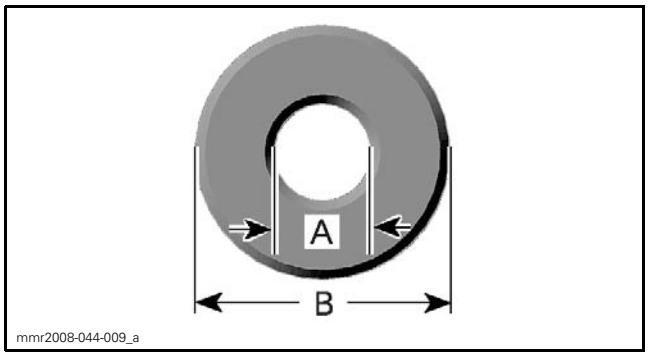


*A. Inner diameter*
*B. Outer diameter*

| DRIVEN PULLEY ROLLER | SERVICE LIMIT |
|---|---|
| Inner diameter | 8.5 mm (.335 in) |
| Outer diameter | 21.5 mm (.846 in) |

3. Measure the roller thickness.

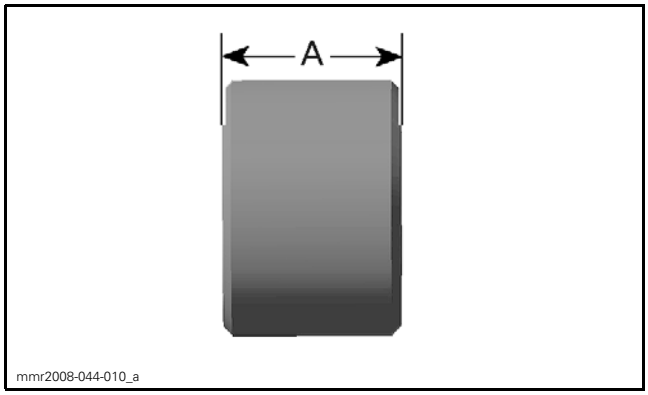


*A. Thickness of roller*

| DRIVEN PULLEY ROLLER | SERVICE LIMIT |
|---|---|
| Thickness | 14.75 mm (.581 in) |

4. If a roller is out of specifications, replace both rollers at the same time.

## Cleaning the Driven Pulley

Use the a clean rag to clean pulley sheaves.

| SERVICE PRODUCT | |
|---|---|
| Scandinavia | PULLEY FLANGE CLEANER (F) (P/N 619 600 022) |
| Other Countries | CLUTCH AND PULLEY FLANGE CLEANER PRO S1 (P/N 779244) |

### Cleaning Cam and Spring

During break-in period, teflon from bushing moves to cam or countershaft surface. A teflon over teflon running condition occurs, leading to low friction. So it is normal to see gray teflon deposit on cam or countershaft. Do not remove this deposit.

When a dust deposit has to be removed from the cam or the countershaft, use dry cloth to avoid removing transferred teflon.

## Driven Pulley Assembly

### Installing the Driven Pulley Roller

NOTE: Exceptionally, do NOT clean threaded hole to avoid changing the screw position when torqued.

1. Using a hand wire brush, clean pivot screw threads.

IMPORTANT: Do not use a thread die to clean pivot screw of threadlocker as this may alter the screw threads.

NOTE: Pivot screw and ribbed lock washer must be reused if in good condition. If damaged, replace fixed sheave assembly.

2. Apply the following threadlocker to the pivot screw threads.

| SERVICE PRODUCT | |
|---|---|
| Pivot screw threads | LOCTITE 243 (BLUE) (P/N 293 800 060) |

3. Insert roller in fixed sheave, thread in pivot screw with ribbed lock washer.

NOTE: The ribbed lock washer must be installed with the concave side towards the fixed sheave.

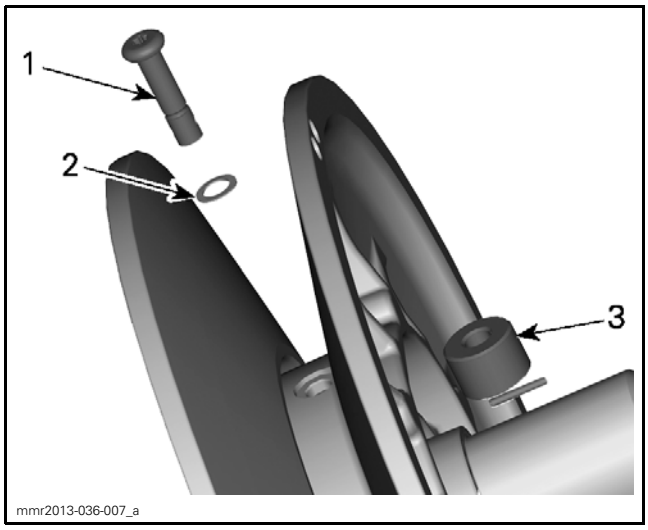


*1. Pivot screw*
*2. Ribbed lock washer (concave side towards fixed sheave)*
*3. Roller*

IMPORTANT: For proper fit, each pivot screw must be reinstalled where originally mounted in the fixed sheave.

4. Tighten pivot screw as specified.

| TIGHTENING TORQUE | |
|---|---|
| Pivot screws | 17 N•m ± 1 N•m (150 lbf•**in** ± 9 lbf•**in**) |

NOTE: Spring pin hole in the fixed sheave and pivot screw must perfectly line up when tighten torque is applied.

***NOTICE*** **If not properly aligned, spring pin will not insert in pivot screw hole and spring pin threads in fixed sheave will be damaged.**

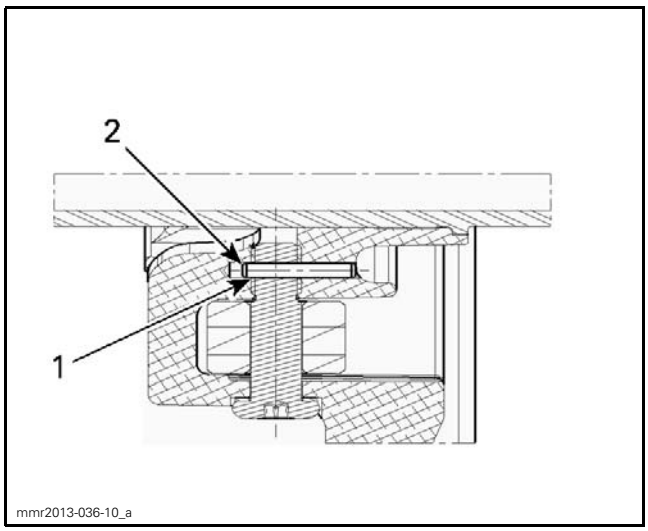


*1. Hole in pivot screw*
*2. Spring pin*

5. Install spring pin.

### Installing Cam and Spring

1. Install a spring stopper, the spring, the other spring stopper and the cam.

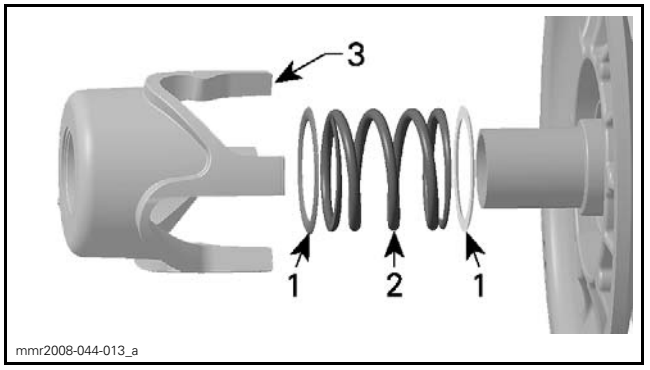


*1. Spring stopper*
*2. Spring*
*3. Cam*

2. Align the arrow on the cam with the arrow on the fixed sheave.

NOTE: On completion of cam installation, the arrow on the cam should have moved clockwise (approximately 30°).

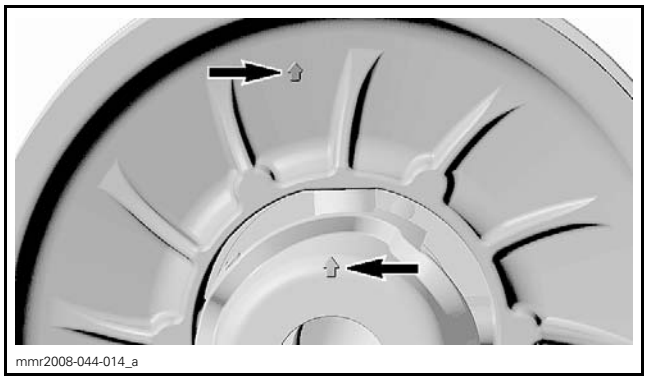


3. Install the driven pulley spring compressor sleeve and tighten the tool screw until the cam is completely pressed against the sliding sheave.
4. Apply threadlocker on the thread of 4 new cam screws.

| RECOMMENDED SERVICE PRODUCT |
|---|
| LOCTITE 648 (GREEN) (P/N 413 711 400) |

5. From the back of the sliding sheave, install 4 new cam screws.
6. Tighten cam screws to specification.

| TIGHTENING TORQUE | |
|---|---|
| Cam screw | 31.5 N•m ± 3.5 N•m (23 lbf•ft ± 3 lbf•ft) + LOCTITE 648 (GREEN) (P/N 413 711 400) |

7. Remove the tool.

### Installing the Sliding Sheave

The assembly of the sliding sheave is the reverse of the disassembly. However, pay attention to the following.

When installing sliding sheave, make sure to align its arrow with the arrow on cam.

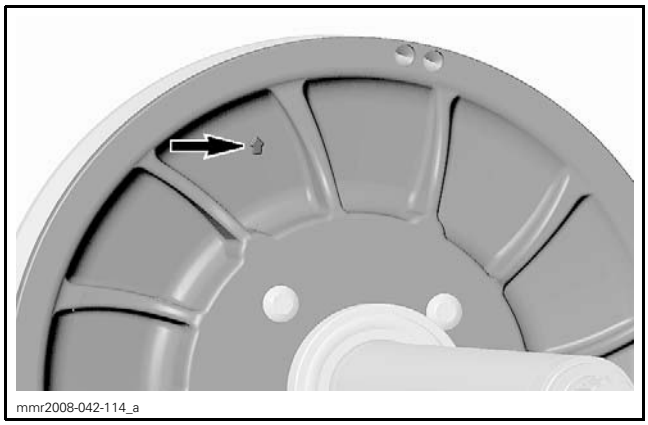
mmr2008-042-114_a

*SLIDING SHEAVE ARROW*


mmr2008-044-014_b

*CAM ARROW*

## Installing the Driven Pulley

### Models with Hi/Lo Gearbox

1. Using sand paper (600-grit or 1000-grit) or steel wool, remove any rust on bearing shoulder of countershaft bearing support.

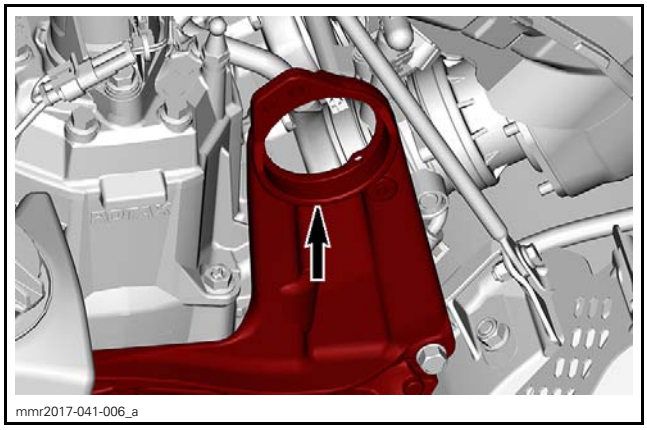
mmr2017-041-006_a

*BEARING SUPPORT SHOULDER*

2. Apply a thin layer of antiseize lubricant on bearing shoulder.

| SERVICE PRODUCT |
|---|
| LOCTITE 767 (ANTI-SEIZE LUBRICANT) (P/N 293 800 070) |

3. Insert countershaft through countershaft bearing support.
4. Align countershaft splines with upper gear splines.
5. On LH side, install the bearing flange. Tighten nut to specification.

| TIGHTENING TORQUE | |
|---|---|
| Bearing flange nut | 15.5 N•m ± 1.5 N•m (137 lbf•**in** ± 13 lbf•**in**) |

6. Install the adjuster hub onto the countershaft end and temporarily tighten.
7. Install and adjust drive belt. Refer to *DRIVE BELT* subsection.
8. Install all other removed parts.

### Models with Chaincase

1. Using sand paper (600-grit or 1000-grit) or steel wool, remove any rust on bearing shoulder of countershaft bearing support.

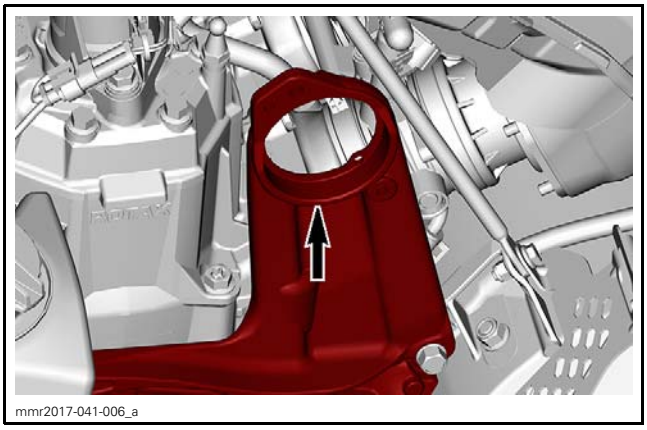


*BEARING SUPPORT SHOULDER*

2. Apply a thin layer of antiseize lubricant on bearing shoulder.

| SERVICE PRODUCT |
|---|
| LOCTITE 767 (ANTI-SEIZE LUBRICANT) (P/N 293 800 070) |

3. Insert countershaft through countershaft bearing support.
4. Fasten the end of countershaft to upper gear retaining tool.
5. Align countershaft splines with upper gear splines.
6. Using the upper gear retaining tool as a puller, Engage countershaft splines in upper gear splines. Ensure countershaft bearing is installed properly in countershaft bearing support.
7. Remove the upper gear retaining tool.
8. Install the upper gear screw and the conical spring washer.

NOTE: The conical spring washer must be installed with its concave side towards upper gear.

9. Tighten the upper gear screw.

| TIGHTENING TORQUE | |
|---|---|
| Upper gear screw | 48 N•m ± 6 N•m (35 lbf•ft ± 4 lbf•ft) |

10. Install chaincase filler plug.
11. On LH side, install the bearing flange. Torque nut as specified.

| TIGHTENING TORQUE | |
|---|---|
| Bearing flange nut | 15.5 N•m ± 1.5 N•m (137 lbf•**in** ± 13 lbf•**in**) |

12. Install the adjuster hub onto the countershaft end and temporarily tighten.
13. Install and adjust drive belt. Refer to *DRIVE BELT* subsection.
14. Install all other removed parts.

# COUNTERSHAFT

The countershaft and the fixed sheave are sold as an assembly. They are not available separately.

## Removing and Installing the Countershaft

Refer to *DRIVEN PULLEY* in this subsection for the procedures.

# COUNTERSHAFT BEARING

## Removing the Countershaft Bearing

Remove the driven pulley. Refer to procedure in this subsection.

Install the bearing remover on countershaft.

| REQUIRED TOOL | |
|---|---|
| COUNTERSHAFT BEARING REMOVER (P/N 529 036 065) |  |
| 4 stroke COUNTERSHAFT ADAPTER (P/N 529 036 424) 2 stroke; DRIVEN ADAPTER (P/N 529 036 508) |  |

Tighten the screw at the end of tool to extract the bearing. Discard bearing.

## Installing the Countershaft Bearing

1. Remove the adjuster hub from the cam.
2. Insert the countershaft support in the countershaft.

| REQUIRED TOOL |
|---|
| COUNTERSHAFT SUPPORT (P/N 529 036 067) |

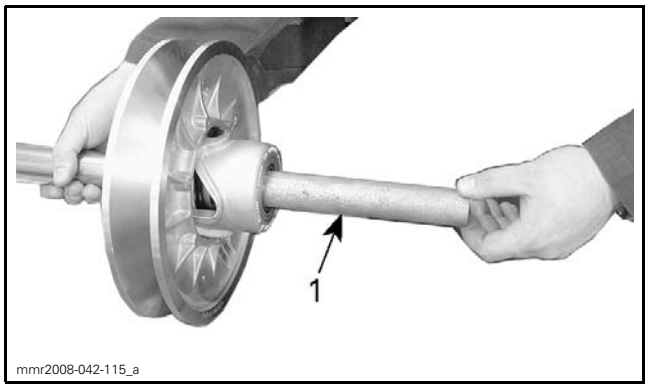


*1. Countershaft support*

**NOTICE** The countershaft support is mandatory to avoid damaging the countershaft threaded end and the cam during bearing installation.

3. Clean residues on countershaft bearing surface.

| SERVICE PRODUCT | |
|---|---|
| Scandinavia | PULLEY FLANGE CLEANER (F) (P/N 619 600 022) |
| Other Countries | CLUTCH AND PULLEY FLANGE CLEANER PRO S1 (P/N 779244) |

4. Check countershaft bearing surface for wear.
5. Apply Loctite 7649 on countershaft bearing surface and let dry 5 minutes.

| SERVICE PRODUCT | |
|---|---|
| Scandinavia | LOCTITE 7649 (F) (P/N 619 600 100) |
| Other Countries | LOCTITE 7649 (PRIMER) (P/N 293 800 041) |

6. Apply Loctite 609 on primer.

| SERVICE PRODUCT |
|---|
| LOCTITE 609 (P/N 413 703 100) |

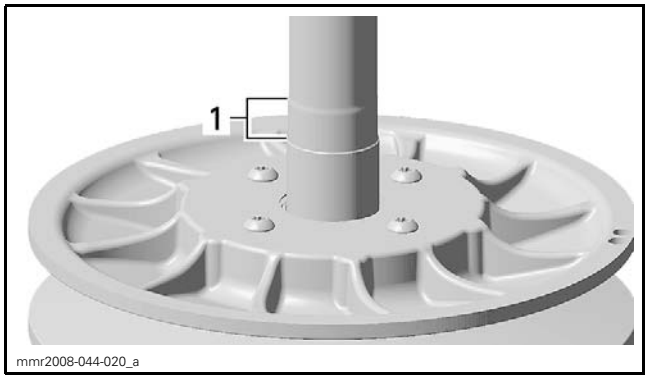


*1. Apply Loctite 7649 (Primer) before Loctite 609 in this region*

7. Using a press and the bearing installer, install the new bearing on countershaft.

| REQUIRED TOOL |
|---|
| COUNTERSHAFT BEARING INSTALLER (P/N 529 036 066) |

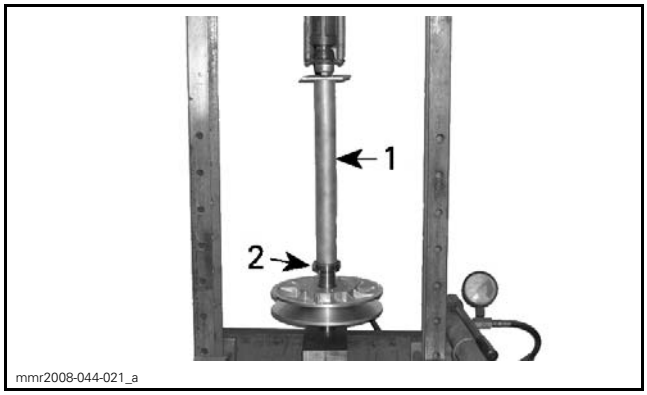


*1. Countershaft bearing installer*
*2. New bearing*

**NOTICE** Use a press only, never tap on countershaft bearing installer with an hammer to avoid damaging bearing and countershaft.

8. Clean the surplus Loctite with a rag to avoid having Loctite on sliding sheave bushing.

## COUNTERSHAFT BEARING SUPPORT

For countershaft bearing support removal and installation, refer to *COUNTERSHAFT BEARING SUPPORT* in *FRAME* subsection.

# BRAKE

## SERVICE TOOLS

| Description | Part Number | Page |
|---|---|---|
| CALIPER PULLER | 529 036 145 | 429 |
| PROTECTIVE CAP | 529 036 150 | 429 |

## SERVICE PRODUCTS

| Description | Part Number | Page |
|---|---|---|
| BRAKE FLUID DOT 4 | 779151 | 425 |
| LOCTITE 767 (ANTI-SEIZE LUBRICANT) | 293 800 070 | 430 |
| SYNTHETIC GREASE | 779162 | 427 |

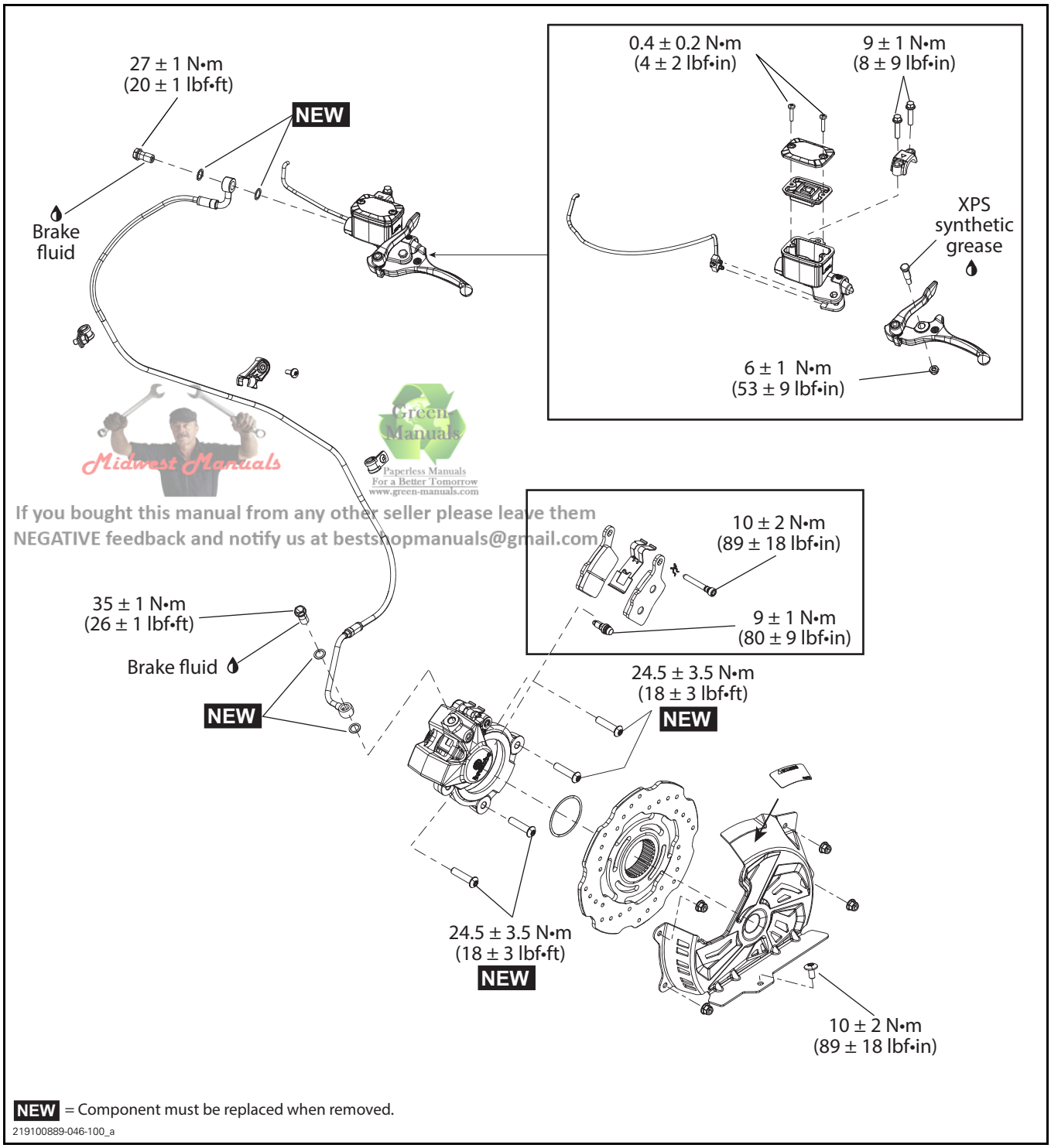


Midwest Manuals
Green Manuals
Paperless Manuals
For a Better Tomorrow
www.green-manuals.com
If you bought this manual from any other seller please leave them
NEGATIVE feedback and notify us at bestshopmanuals@gmail.com

**NEW** = Component must be replaced when removed.

219100889-046-100_a

# GENERAL

During assembly/installation, use torque values and service products as in the exploded view.

Clean threads before applying a threadlocker. Refer to *SELF-LOCKING FASTENERS* and *LOCTITE APPLICATION* at the beginning of this manual for complete procedure.

**⚠ WARNING**

Torque wrench tightening specifications must be strictly adhered to.
Locking devices must be replaced with new ones when removed (e.g.: locking tabs, elastic stop nuts, cotter pins, etc.).

Hoses or cables removed or disconnected must be installed and routed as per factory specifications.

***NOTICE*** Locking ties removed must be replaced as per factory specifications.

**⚠ WARNING**

Never apply any product to brake fittings, The use of thread sealant or Teflon tape could cause brake system failure.

**⚠ WARNING**

A contaminated brake disc or pad reduces braking efficiency. Discard contaminated pads and clean contaminated disc with a high quality brake degreasing agent.

***NOTICE*** Avoid spilling brake fluid on plastic, rubber or painted parts. Protect these parts with a rag when servicing the brake system.

***NOTICE*** Wipe up any brake fluid spillage.

***NOTICE*** To avoid serious damage to the brake system, use only DOT 4 brake fluid from a sealed container. Do not use brake fluid taken from an old or already opened containers, or mix different fluids for topping up the system.

***NOTICE*** Sealing washers must be discarded and replaced with NEW ones every time a Banjo fitting is unscrewed.

Dispose of brake fluid as per your local environmental regulation.

# MAINTENANCE

## RECOMMENDED BRAKE FLUID

Always use brake fluid meeting the DOT 4 specification.

| RECOMMENDED SERVICE PRODUCT |
|---|
| BRAKE FLUID DOT 4 (P/N 779151) |

## VERIFYING THE BRAKE FLUID LEVEL

With the vehicle on a level surface, position steering in the straight-ahead position to ensure reservoir is level.

Brake fluid must always be above the MIN. line when brake lever is squeezed.

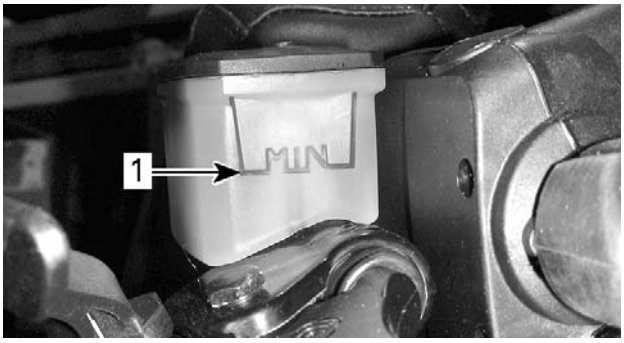


*TYPICAL*
*1. MINIMUM line*

Add fluid as required. Do not overfill.

NOTE: A low level may indicate leaks or worn brake pads.

## REPLACING THE BRAKE FLUID

### Draining the Brake Fluid

1. Place vehicle on a level surface.
2. Remove reservoir cover with its diaphragm.

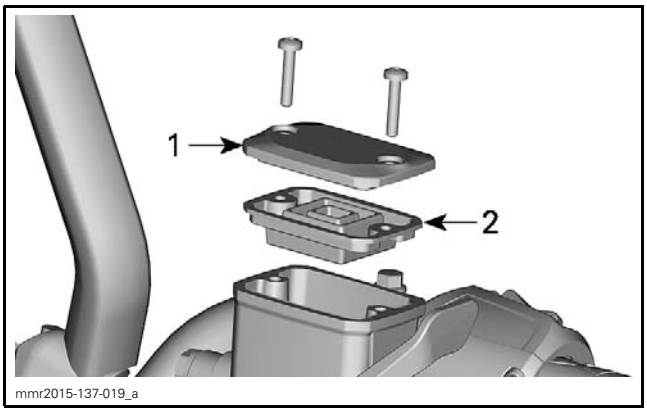


*1. Reservoir cover*
*2. Diaphragm*

3. Connect a clear hose to caliper bleeder.
4. Place the other end of hose in a container.
5. Loosen bleeder and pump brake lever until no more fluid flows out of bleeder.

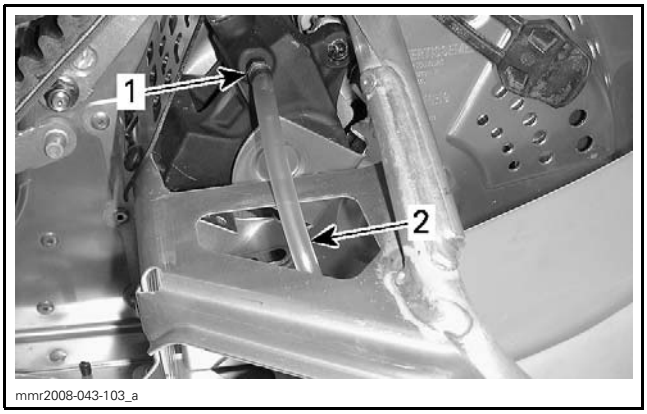


*TYPICAL*
*1. Bleeder*
*2. Clear hose to catch used brake fluid*

NOTE: To drain the fluid trapped in the caliper, push the pistons in.

## Filling the Brake Fluid

To fill brake circuit when it is empty do the following:

1. Ensure reservoir cover is removed.
2. Using a large syringe and a suitable tube, push brake fluid slowly into the caliper.

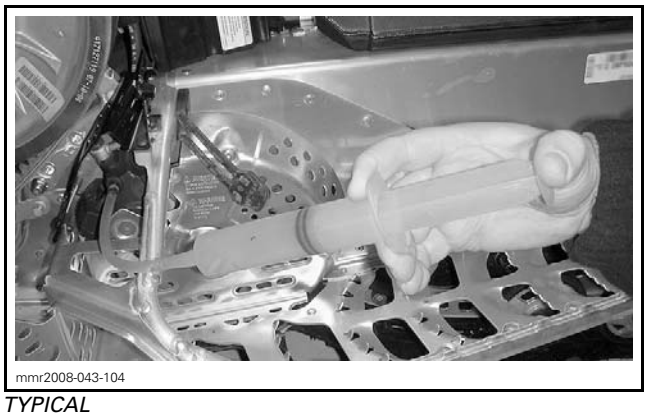


*TYPICAL*

3. Continue to push brake fluid until master cylinder reservoir is half full.
4. Close bleeder.
5. Fill up reservoir and install diaphragm and cover.
6. Squeeze brake lever.
   6.1 If brake lever is firm, the brake system does not require bleeding. Torque bleeder as specified.

| TIGHTENING TORQUE | |
|---|---|
| Brake caliper bleeder | 8.5 N•m ± 1.5 N•m (75 lbf•**in** ± 13 lbf•**in**) |

   6.2 If brake lever is spongy, bleed brake system as per following procedure.

# BLEEDING THE BRAKE SYSTEM

1. Install a clear hose on bleeder.
2. Place the other end in a container partially filled with clean brake fluid.
3. Remove reservoir cover and diaphragm.
4. Pump up circuit pressure with brake lever until lever resistance is felt.
5. Squeeze brake lever and open bleeder. When lever touches the handlebar, do not release lever and close bleeder.
6. Release brake lever slowly.
7. Repeat the procedure until no more air bubbles appear in hose.

NOTE: Check fluid level often to prevent air from being pumped into the circuit.

8. Install cover and diaphragm on reservoir.
9. Squeeze brake lever.
   9.1 If brake lever is firm, bleeding procedure is completed. Torque bleeder as specified.
   9.2 If brake lever is still spongy, repeat step 2 to step 6.

10. Torque bleeder as specified.

| TIGHTENING TORQUE | |
|---|---|
| Brake caliper bleeder | 8.5 N•m ± 1.5 N•m (75 lbf•**in** ± 13 lbf•**in**) |

11. Refill reservoir.
12. Install diaphragm and cover on reservoir.

## INSPECTING THE BRAKE HOSE, PADS AND DISC

### Break-In Inspection

Visually inspect the brake hose for leaks or any damage.

Visually inspect pads and disc for abnormal wear or any damage.

### Scheduled Maintenance and Preseason

Visually inspect the brake hose for leaks or any damage.

Refer to *BRAKE* subsection and carry out:
– *INSPECTING THE BRAKE PAD*
– *INSPECTING THE BRAKE DISC*.

## LUBRICATING THE BRAKE LEVER PIVOT

1. Remove brake lever pivot.
2. Lubricate brake lever pivot using recommended product.

| SERVICE PRODUCT |
|---|
| SYNTHETIC GREASE (P/N 779162) |

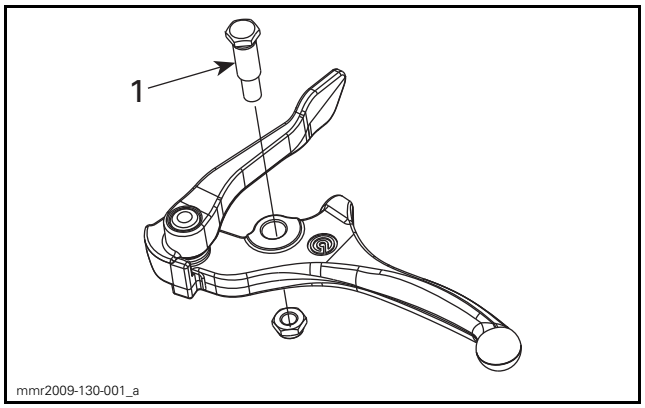


*1. Lubricate this surface*

3. Install brake lever pivot.
4. Torque pivot nut of brake lever as specified.

| TIGHTENING TORQUE | |
|---|---|
| Brake lever pivot nut | 6 N•m ± 1 N•m (53 lbf•**in** ± 9 lbf•**in**) |

# PROCEDURES

## BRAKE PADS

### Inspecting the Brake Pads

1. Measure brake pad lining thickness.

| SERVICE LIMIT | |
|---|---|
| Brake pad thickness A | 1 mm (1/32 in) |

**NOTICE** Brake pads must always be replaced in pairs.

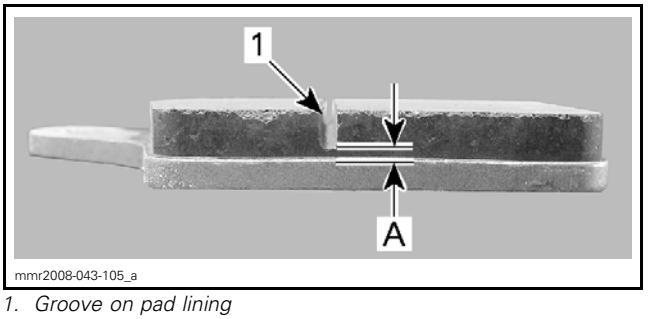


*1. Groove on pad lining*

2. Also inspect the brake disc, refer to *INSPECTING THE BRAKE DISC* in this subsection.

### Replacing the Brake Pads

#### Removing the Brake Pads

1. Place the vehicle on a level surface.
2. Cover the plastic parts under and near master cylinder in the event that brake fluid would be spilled.
3. Remove reservoir cover with its diaphragm seal.

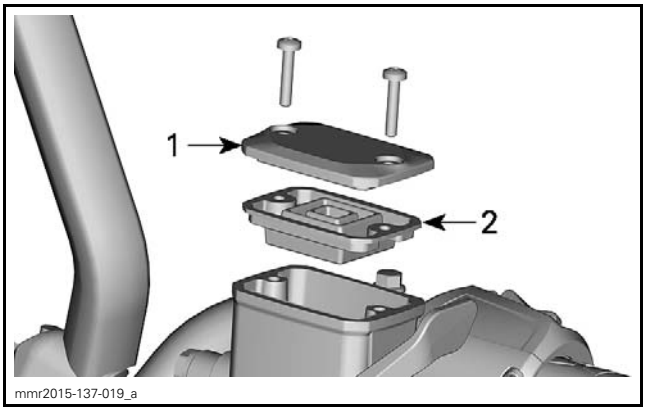


*1. Reservoir cover*
*2. Diaphragm*

4. Open the LH side panel.
5. Remove the LH toe hook (if equipped).

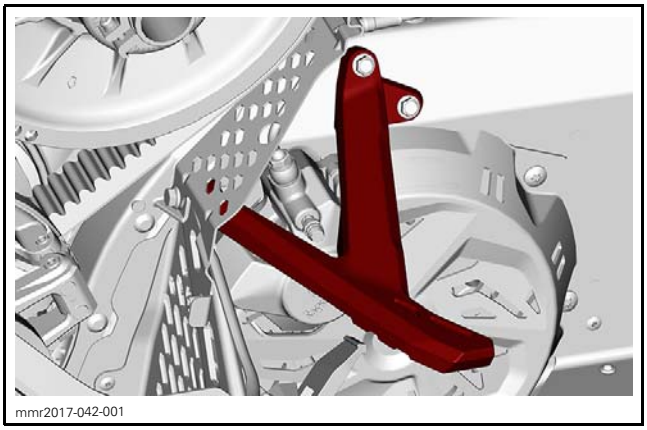
mmr2017-042-001

6. Remove the disc brake protective cover.

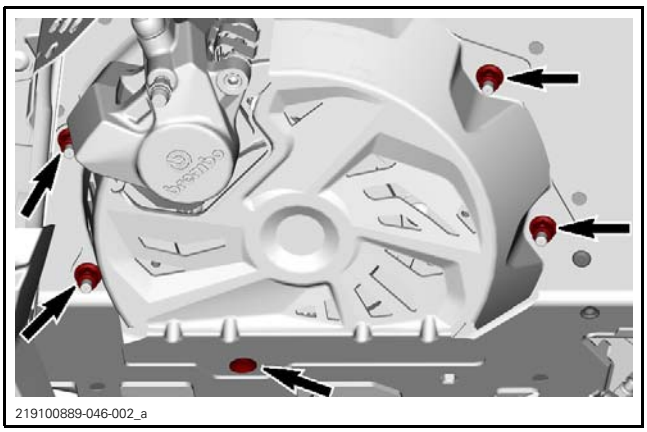
219100889-046-002_a

*5 HOLES MOUNT*

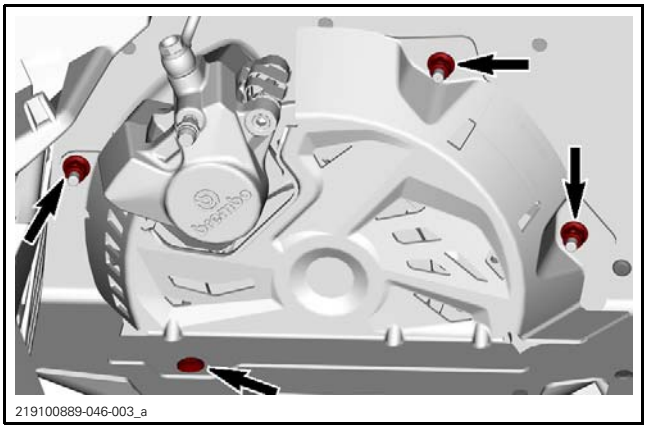
219100889-046-003_a

*4 HOLES MOUNT*

7. Remove the clip securing brake pad pin.
8. Unscrew and remove the brake pad pin.

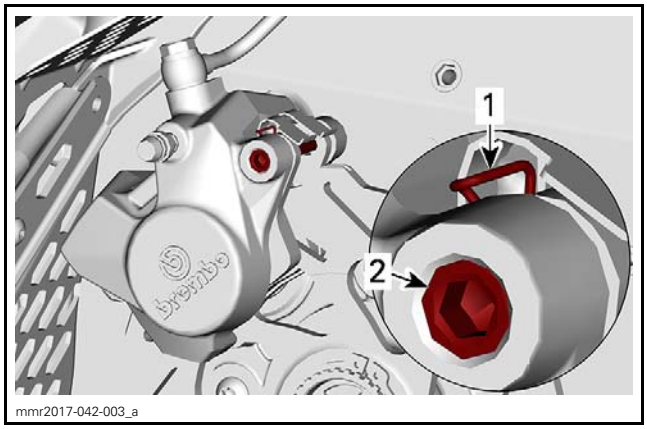

mmr2017-042-003_a

*1. Clip*
*2. Brake pad pin*

9. Using a flat screwdriver, depress caliper pistons into their bores. Pay attention for pistons to go back in straight. Insert screwdriver alternatively backwards and forwards and move pistons by small steps.

***NOTICE*** **Pay attention to avoid scratching brake disc.**

10. Remove brake pads.
    10.1 Remove the external pad first.

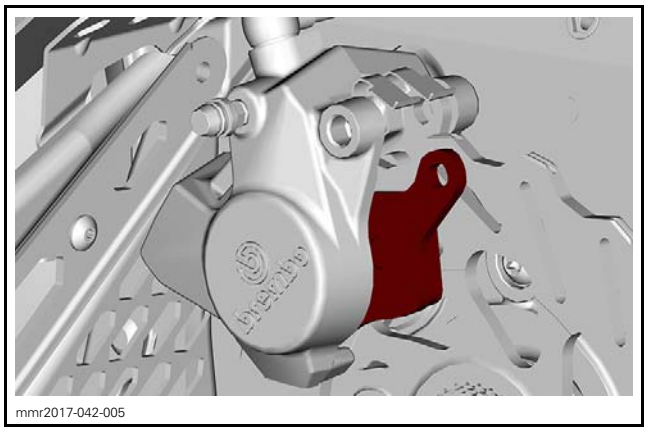
mmr2017-042-005

    10.2 Pull the brake disc outward and remove the internal pad.

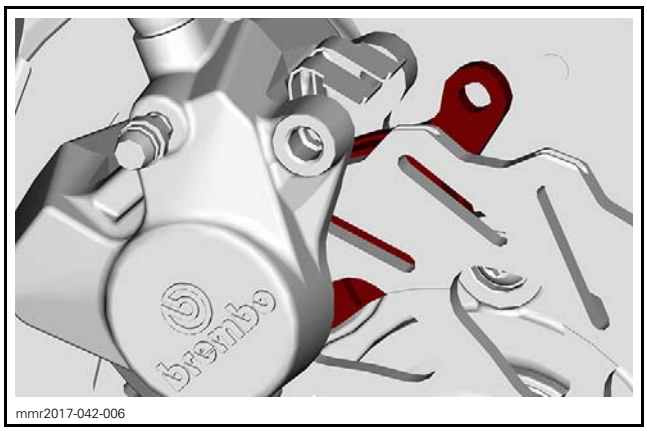
mmr2017-042-006

### Installing the Brake Pads

The installation is the reverse of the removal. However, pay attention to the following.

1. Install new brake pads with tabs facing upward.
2. Install brake pad pin and tighten to specification.

| TIGHTENING TORQUE | |
|---|---|
| Brake pad pin | 10 N•m ± 2 N•m (89 lbf•**in** ± 18 lbf•**in**) |

3. Install spring clip on brake pad pin. If the clip seems loose, replace it with a new one.

NOTE: Make sure anti-rattle spring ends on brake pads tabs are correctly installed as per following pictures.

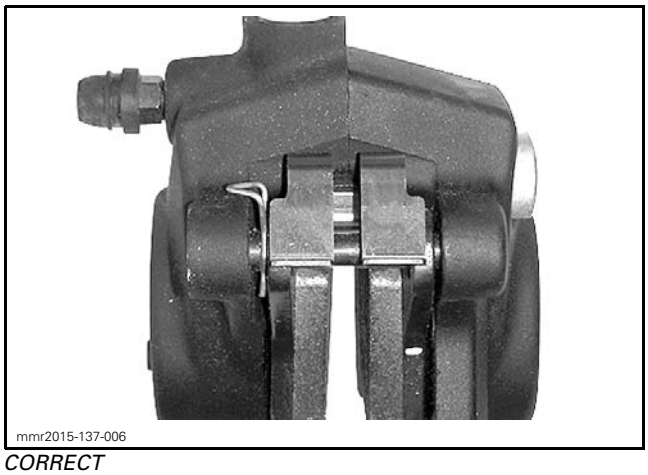


*CORRECT*

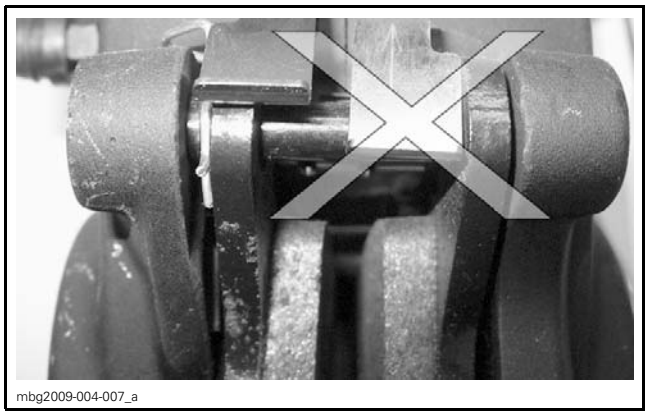


*INCORRECT (RIGHT SIDE SPRING CLIP)*

4. Operate the brake lever several times to bring the brake pads into contact with the disc brake.
5. Check brake fluid level in master cylinder and refill if necessary.
6. Reinstall the diaphragm and the cover.
7. Ride the vehicle a few minutes to make sure the repair is successful.

## CALIPER

### Removing the Caliper

1. Open LH side panel.
2. Remove the drive belt guard support. Refer to *DRIVE BELT* subsection.
3. Remove the LH toe hook (if equipped).
4. If the caliper is replaced, refer to *DRAINING THE BRAKE FLUID* in this subsection.
5. Remove the brake pads, Refer to procedure in this subsection.
6. Lift the rear of vehicle and release track tension completely.
7. Turn track to align brake disc slots with caliper bracket screws.
8. Remove caliper screws (4) behind brake disc.

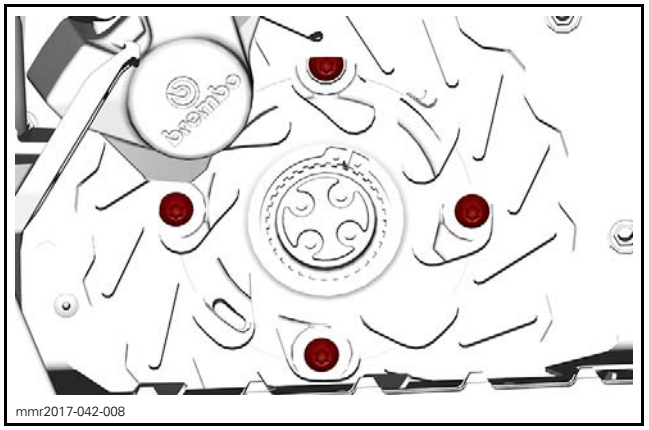


9. Unlock the caliper retaining plate from inside the tunnel.

| REQUIRED TOOL | |
|---|---|
| CALIPER PULLER (P/N 529 036 145) |  |
| PROTECTIVE CAP (P/N 529 036 150) |  |

10. Install the caliper puller on the brake caliper through brake disc slots.

NOTE: Make sure puller tabs are correctly engaged on caliper.

11. Install the protective cap between caliper puller bolt and plastic cap in drive axle end.

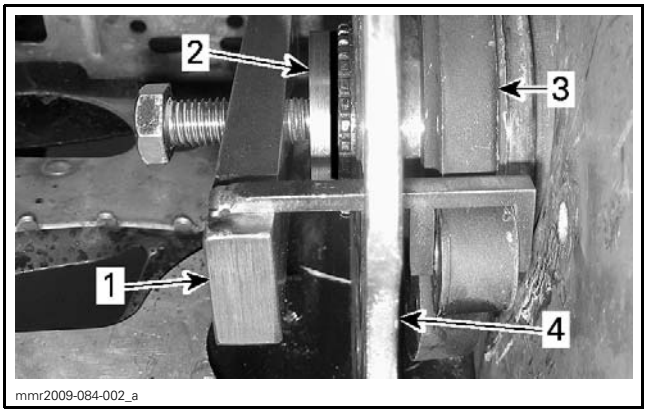


*TYPICAL*
1. *Caliper puller*
2. *Protective cap*
3. *Caliper bracket*
4. *Brake disc*

12. Tighten caliper puller bolt to separate caliper from drive axle bearing.

**NOTICE** Never use an impact tool to operate caliper puller. The caliper or the puller could break.

13. When brake disc is out of splines, remove it.
14. Remove caliper.

**NOTICE** Do not let caliper hang by the hose and do not stretch or twist the hose.

## Inspecting the Caliper

1. Check caliper pistons for:
   - Proper operation
   - Rust
   - Scratches
   - Leaks.
2. Check caliper bracket for:
   - Cracks
   - Rust on bearing shoulder (clean with a steel wood).
3. Replace caliper if required.

## Installing the Caliper

1. Using your fingers or a small piece of wood, push both pistons into their bores.
2. Clean brake caliper bearing shoulder with fine steel wool.
3. Apply antiseize lubricant on drive axle splines and on bearing shoulder of caliper bracket.

| SERVICE PRODUCT |
| --- |
| LOCTITE 767 (ANTI-SEIZE LUBRICANT) (P/N 293 800 070) |

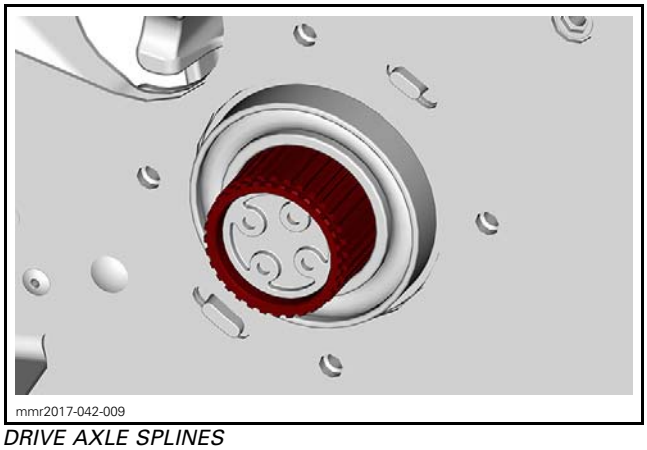


*DRIVE AXLE SPLINES*

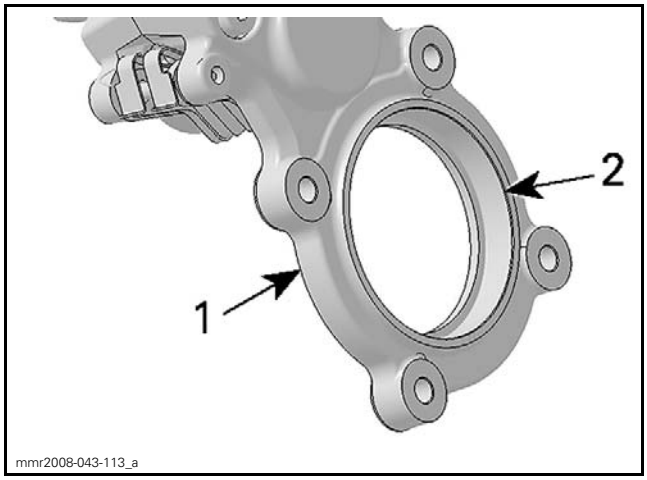


1. *Caliper bracket*
2. *Bearing shoulder*

4. Insert brake disc in the caliper. The brake disc collar must be inserted in the caliper bracket.

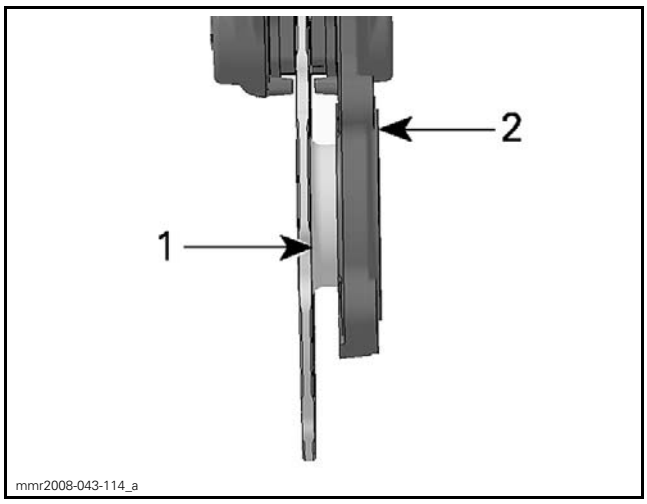


1. *Brake disc collar*
2. *Caliper bracket*

5. Ensure bearing flange is properly locked in the frame. Tabs must be properly inserted in frame slots.


mmr2017-042-010

*VIEW FROM OUTSIDE FRAME*

6. Align brake disc splines with drive axle splines and push brake disc onto drive axle.
7. Push the caliper bracket over the drive axle bearing.

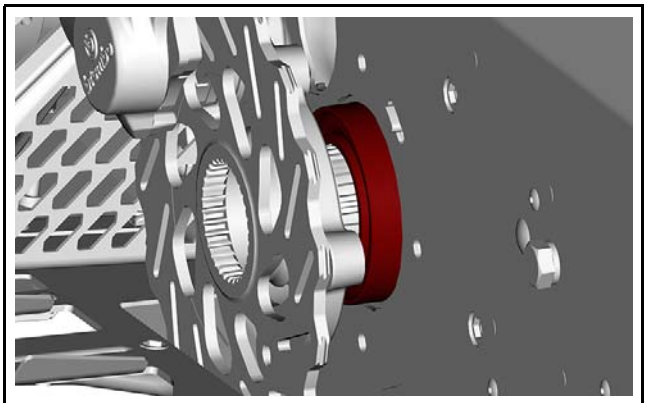
mmr2017-042-011

8. Align caliper bracket holes with bearing flange holes and install caliper screws.

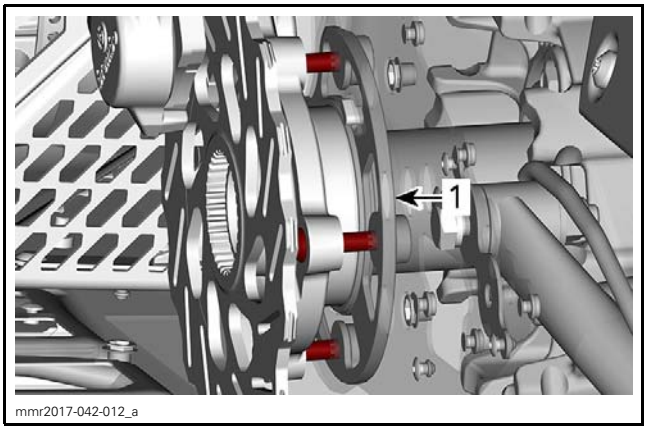

mmr2017-042-012_a

*TYPICAL - TUNNEL IS TRANSPARENT FOR CLARITY*
*1. Bearing flange (inside frame)*

9. HAND TIGHTEN each caliper bracket screw evenly in a criss-cross pattern until bracket is correctly positioned against frame.

**NOTICE** Never use an air tool to tighten caliper screws. The caliper bracket could crack.

10. Install the brake pads. Refer to procedure in this subsection.
11. Install the brake disc circlip.
12. Tighten the brake caliper screws to specification.

| TIGHTENING TORQUE | |
|---|---|
| Caliper screws | 24.5 N•m ± 3.5 N•m (18 lbf•ft ± 3 lbf•ft) |

13. Apply brake fluid on Banjo fitting threads.
14. Install the Banjo fitting with two new sealing washers.
15. Tighten Banjo fitting to specification.

| TIGHTENING TORQUE | |
|---|---|
| Banjo fitting | 35 N•m ± 1 N•m (26 lbf•ft ± 1 lbf•ft) |

16. Fill and bleed the brake system. Refer to *MAINTENANCE* in this subsection.
17. Install all other removed parts.
18. Check the operation of the brake carefully before riding the snowmobile.

# BRAKE DISC

## Inspecting the Brake Disc (Not Removed)

1. Remove the disc brake protective cover.
2. Check for scoring, cracking or bending, replace as required.
3. Measure brake disc thickness. If the brake disc is out of specification, replace it with a new one.

**NOTICE** Brake disc should never be machined.

| BRAKE DISC SPECIFICATION | |
|---|---|
| Minimum thickness | 4.5 mm (.177 in) |

## Inspecting the Brake Disc (Removed)

1. Check brake disc splines and drive axle splines for wear or other damages. Replace defective parts.

### Removing and Installing the Brake Disc

Follow procedures for caliper removal and installation.

## MASTER CYLINDER

### Removing the Master Cylinder

NOTE: If the master cylinder is not replaced, omit the steps concerning brake system draining and brake hose removal.

1. Drain brake system, Refer to *MAINTENANCE* in this subsection.
2. Remove the Banjo fitting and discard the sealing washers.

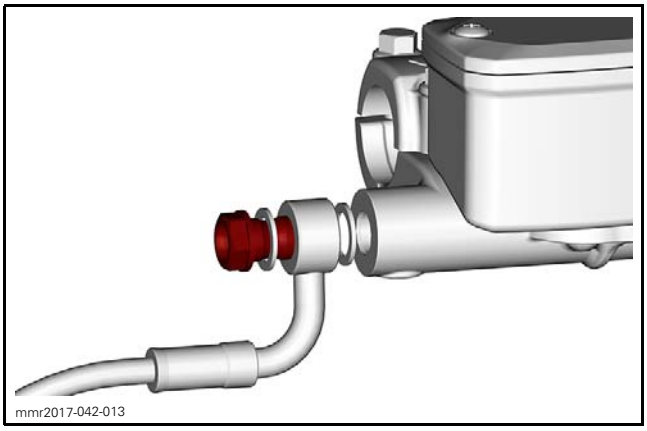
mmr2017-042-013

3. Remove screws and clamp securing master cylinder to handlebar.

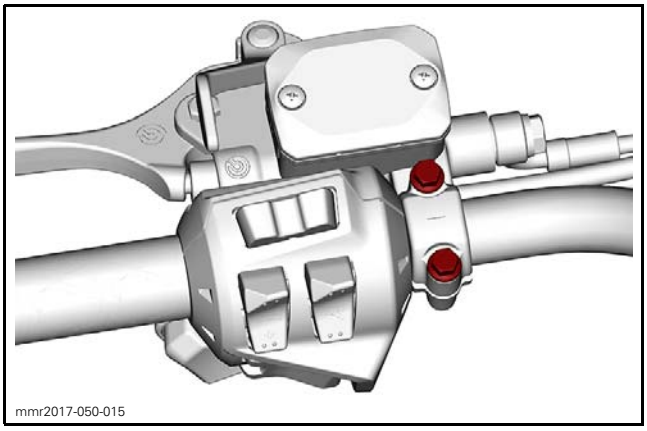
mmr2017-050-015

4. Remove master cylinder.

**NOTICE** Do not let master cylinder hang by the hose and do not stretch or twist the hose.

### Inspecting the Master Cylinder

1. Discard all remaining fluid inside master cylinder reservoir.
2. Check if the reservoir cap seal is brittle, hard or damaged. Replace as necessary.
3. If the reservoir is damaged or leaking, replace master cylinder.
4. Check if brake lever is bent, cracked or otherwise damaged. Replace brake lever if required.

### Installing the Master Cylinder

1. Place the master cylinder on the handlebar.
2. Install master cylinder retaining clamp with its arrow pointing toward the front of vehicle.

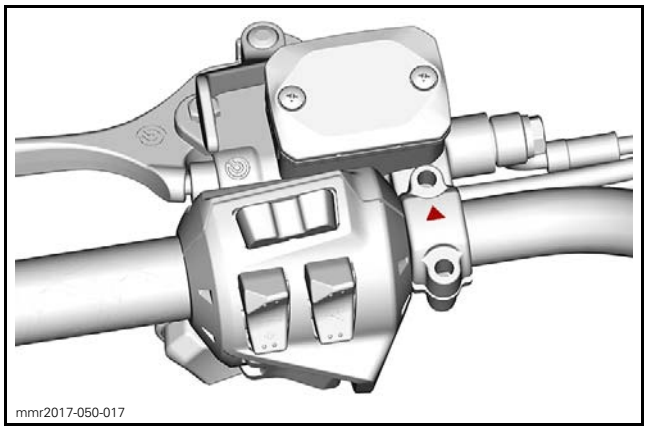
mmr2017-050-017

3. Install master cylinder clamp screws and tighten loosely.
4. With the handlebar in the straight ahead position, place the reservoir parallel to the ground.
5. Tighten master cylinder clamp screws to specification.

| TIGHTENING TORQUE | |
|---|---|
| Master cylinder clamp screws | 9 N•m ± 1 N•m (80 lbf•**in** ± 9 lbf•**in**) |

6. Install the Banjo fitting with two new sealing washers.
7. Tighten Banjo fitting to specification.

| TIGHTENING TORQUE | |
|---|---|
| Banjo fitting | 27 N•m ± 1 N•m (20 lbf•ft ± 1 lbf•ft) |

8. Fill and bleed the brake system. Refer to *MAINTENANCE* in this subsection.
9. Install brake light switch.
10. Install steering cover.

# BRAKE LEVER

## Replacing the Brake Lever

Always lubricate brake lever pivot when replacing brake lever or pivot. Refert to *LUBRICATING THE BRAKE LEVER PIVOT*.

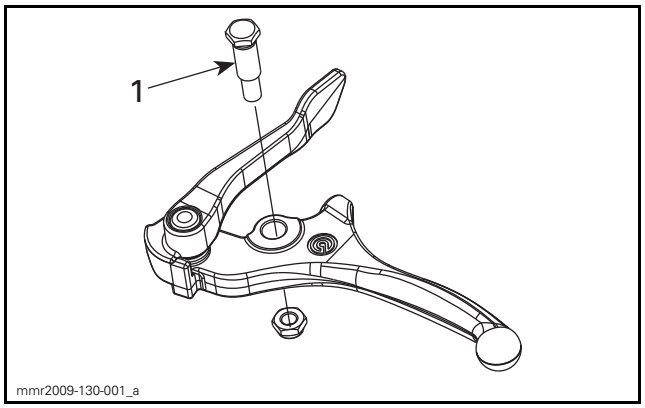


*TYPICAL*
*1. Lubricate brake lever pivot*

Tighten the pivot nut of brake lever to specification.

| TIGHTENING TORQUE | |
|---|---|
| Brake lever pivot nut | 6 N•m ± 1 N•m (53 lbf•**in** ± 9 lbf•**in**) |

# BRAKE LIGHT SWITCH

## Testing the Brake Light Switch Resistance

1. Remove the upper body module. Refer to *BODY* subsection.
2. Disconnect the brake light switch connector located on the ECM.

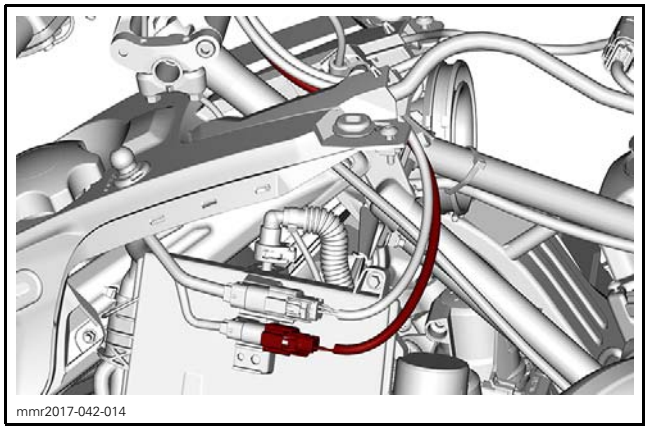


3. Validate switch operation with an ohmmeter as follows.

| LH HANDLEBAR CONNECTOR (4-PIN) | | |
|---|---|---|
| SWITCH | WIRE | RESISTANCE |
| Released | Pin 2 and pin 4 | Infinite (OL) |
| Squeezed and held | | Close to 0 Ω |

If readings do not correspond to the above specifications, replace switch.

If readings correspond to the above specifications, check fuse, wiring and connectors going to switch. Repair or replace defective part(s).

## Removing the Brake Light Switch

1. Remove the upper body module. Refer to *BODY* subsection.
2. Disconnect the brake light switch connector located on the ECM.

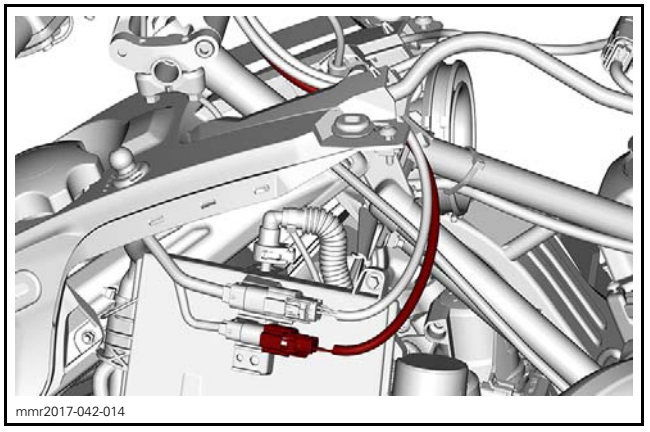


3. Slip a small screwdriver between brake light switch and master cylinder housing and separate them.

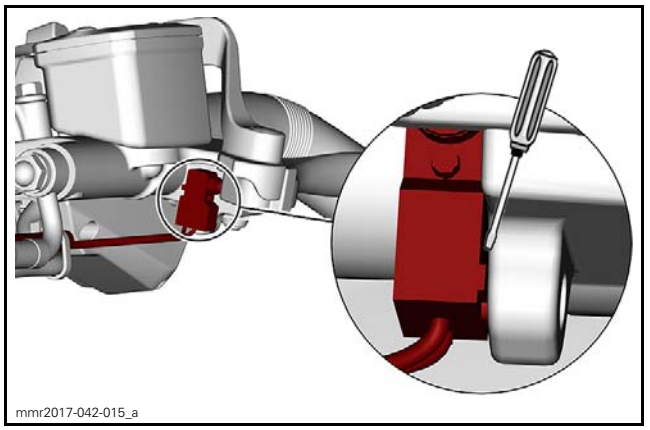


4. Cut all locking ties securing switch wires.

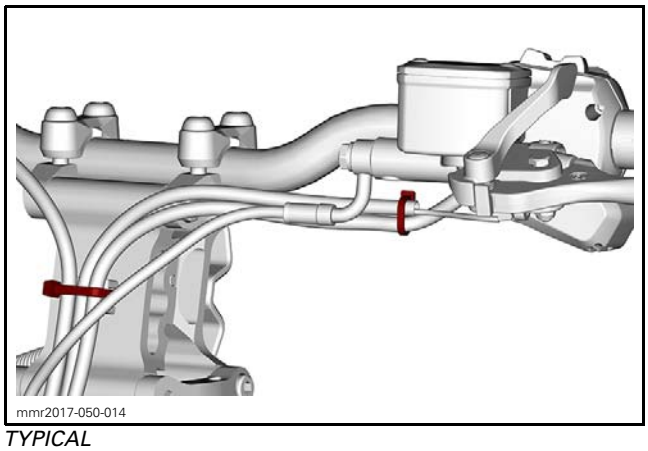
mmr2017-050-014

*TYPICAL*

5. Remove switch wires from connector. Refer to *WIRING HARNESS AND CONNECTORS*.

NOTE: Check wires location for reinstallation.

### Installing the Brake Light Switch

The installation is the reverse of the removal procedure. However, pay attention to the following.

Plug switch wires into connector as per following tables.

| LH HANDLEBAR CONNECTOR (4-PIN) | |
|---|---|
| WIRE | CONNECTOR |
| GRAY | Pin 4 |
| BROWN | Pin 2 |

Check if switch is working properly.

Install new locking ties.

## BRAKE HOSE

### Replacing the Brake Hose

1. Remove the console. Refer to *BODY* subsection.
2. Drain the brake system. Refer to *MAINTENANCE* in this subsection.
3. Remove Banjo fittings at both ends of hose. Refer to *REMOVING THE MASTER CYLINDER* and *REMOVING THE CALIPER*.
4. Remove fasteners that secure the hose clamps to the frame.

***NOTICE*** **Take care not to overdrill the lower clamp rivet. The fuel tank could be damaged.**

The installation is the reverse of the removal procedure. However, pay attention to the following.

Install new sealing washer.

| TIGHTENING TORQUE | |
|---|---|
| Middle clamp nut | 2.3 N•m ± 0.2 N•m (20 lbf•**in** ± 2 lbf•**in**) |
| Caliper Banjo fitting | 35 N•m ± 1 N•m (26 lbf•ft ± 1 lbf•ft) |
| Master cylinder Banjo fitting | 27 N•m ± 1 N•m (20 lbf•ft ± 1 lbf•ft) |

# CHAINCASE

## SERVICE TOOLS

| Description | Part Number | Page |
|---|---|---|
| BEARING PULLER/PUSHER | 529 036 111 | 440 |
| BEARING PULLER/PUSHER | 529 036 112 | 440 |

## SERVICE PRODUCTS

| Description | Part Number | Page |
|---|---|---|
| LOCTITE 5900 | 293 800 066 | 446 |
| SYNTHETIC CHAINCASE OIL | 779156 | 437 |

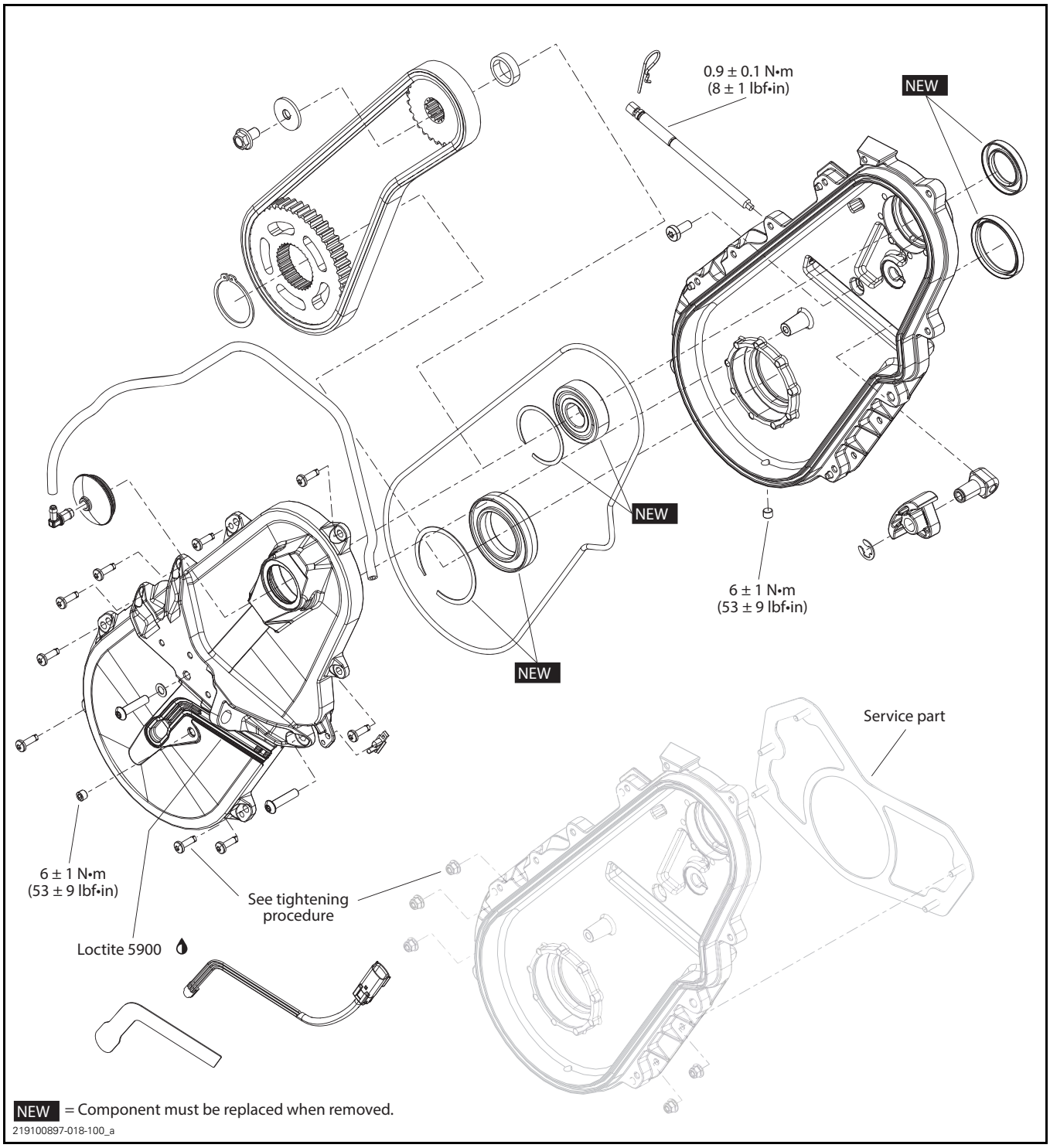
0.9 ± 0.1 N•m
(8 ± 1 lbf•in)
NEW
NEW
NEW
6 ± 1 N•m
(53 ± 9 lbf•in)
Service part
6 ± 1 N•m
(53 ± 9 lbf•in)
See tightening procedure
Loctite 5900
NEW = Component must be replaced when removed.
219100897-018-100_a

# GENERAL

During assembly/installation, use the torque values and service products as in the exploded view.

Clean threads before applying a threadlocker. Refer to *SELF-LOCKING FASTENERS* and *LOCTITE APPLICATION* at the beginning of this manual for complete procedure.

**⚠ WARNING**

**Torque wrench tightening specifications must be strictly adhered to.**
**Locking devices must be replaced with new ones when removed (e.g.: locking tabs, elastic stop nuts, cotter pin, etc.).**

***NOTICE*** **Hoses, cables and locking ties removed during a procedure must be reinstalled as per factory standards.**

# MAINTENANCE

## CHAINCASE OIL

### Recommended Chaincase Oil

| RECOMMENDED SERVICE PRODUCT |
|---|
| SYNTHETIC CHAINCASE OIL (P/N 779156) |

***NOTICE*** **Use only the recommended type oil when servicing. Do not mix synthetic oil with other types of oil.**

### Verifying the Chaincase Oil Level

1. Place vehicle on a level surface.
2. Remove the check plug beside the speed sensor on the chaincase cover. Oil level must be equal with the lower edge.

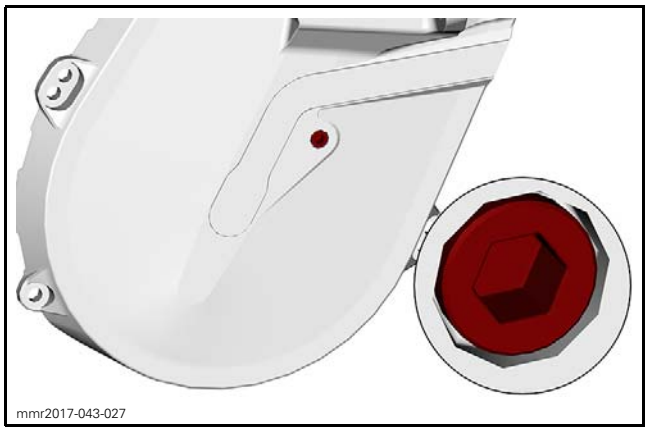
mmr2017-043-027

3. Remove metal particles from magnetic check plug.

NOTE: It is normal to find metallic particles stuck to magnetic check plug. If bigger pieces of metal are found, remove the chaincase cover and inspect the chaincase parts.

4. To add oil, remove the filler cap on top of chaincase cover.

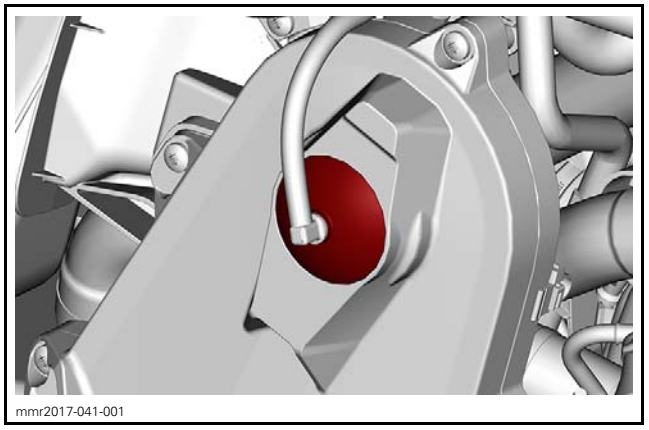
mmr2017-041-001

5. Pour recommended oil in chaincase by the filler hole until oil comes out by the magnetic check plug hole.
6. Reinstall magnetic check plug and torque to specification.

| TIGHTENING TORQUE | |
|---|---|
| Magnetic check plug | 6 N•m ± 1 N•m (53 lbf•**in** ± 9 lbf•**in**) |

### Replacing the Chaincase Oil

1. Place vehicle on a level surface.
2. Place a container under vehicle in line with chaincase to catch chaincase oil.
3. Remove the drain plug on the bottom of the chaincase.

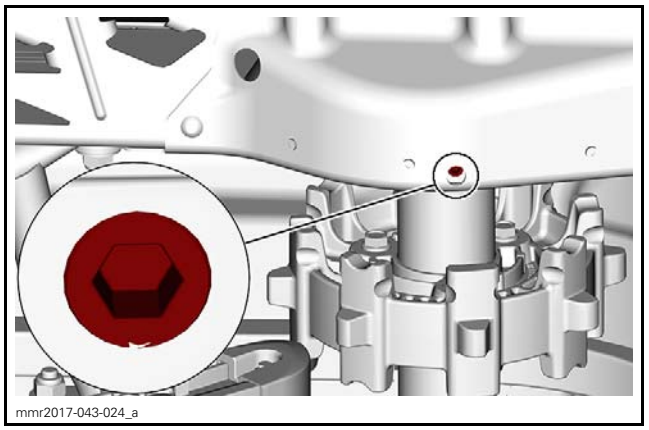
mmr2017-043-024_a

4. Reinstall the drain plug.

| TIGHTENING TORQUE | |
|---|---|
| Drain plug | 6 N•m ± 1 N•m (53 lbf•**in** ± 9 lbf•**in**) |

5. Remove the magnetic check plug
6. Pour approximately 350 ml (12 U.S. oz) of recommended oil in chaincase through the filler hole until oil comes out by the magnetic check plug hole.
7. Clean the magnetic check plug. Refer to *CHAINCASE OIL LEVEL VERIFICATION*, see procedure in this subsection.

## DRIVE CHAIN

### Adjusting the Drive Chain

1. Tighten tensioner adjustment screw BY HAND.

NOTE: Turn adjustment screw until resistance is strong enough that it can not be turned by hand.

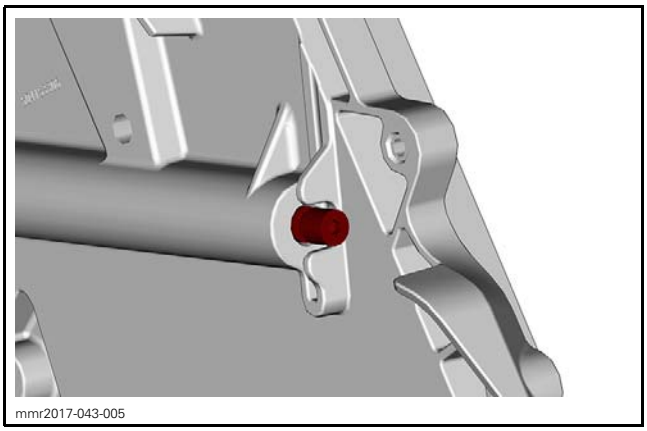
mmr2017-043-005

# PROCEDURES

## CHAINCASE

### Chaincase Disassembly

#### Removing the Chaincase Cover

1. Apply parking brake.
2. Remove the muffler. Refer to *EXHAUST SYSTEM* subsection.
3. Remove the filler plug on the chaincase cover.

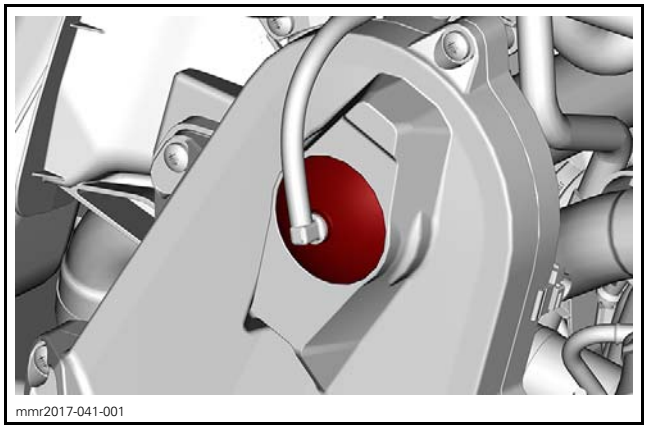
mmr2017-041-001

4. Place a container under vehicle in line with chaincase to catch chaincase oil.
5. Remove the drain plug on the bottom of the chaincase.

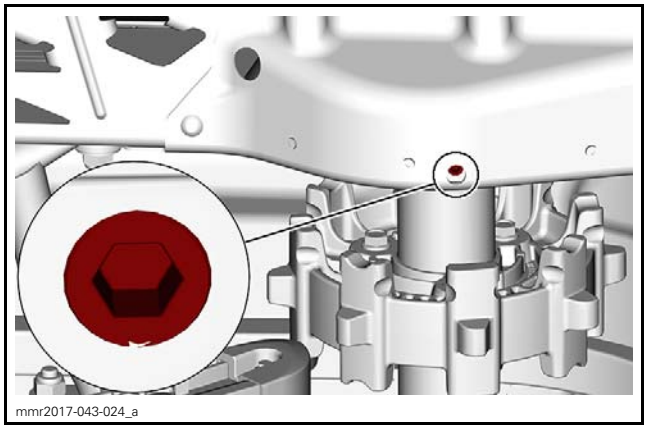
mmr2017-043-024_a

6. Disconnect speed sensor connector.

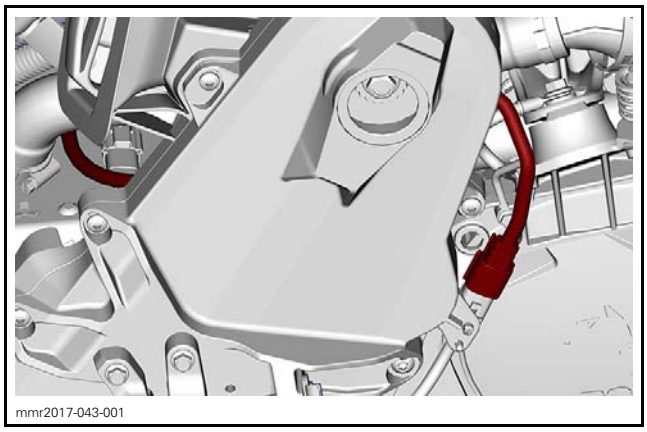
mmr2017-043-001

7. Remove the RH side toe hook and the screw securing the cover to the footrest.

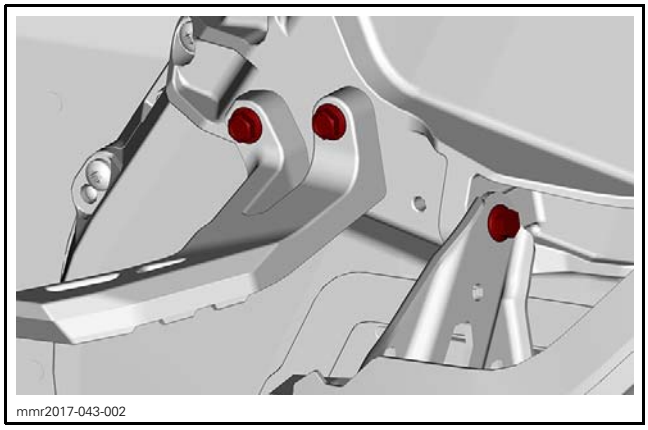
mmr2017-043-002

8. Remove chaincase cover screws.

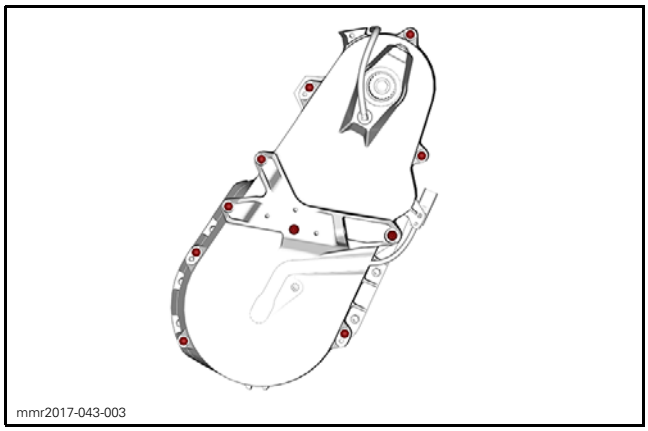
mmr2017-043-003

*TYPICAL*

9. Pull on bottom of chaincase cover to drain oil.
10. Wait a moment then remove the cover completely.

### Removing the Chain Tensioner

1. Remove the hair pin from behind the chaincase.

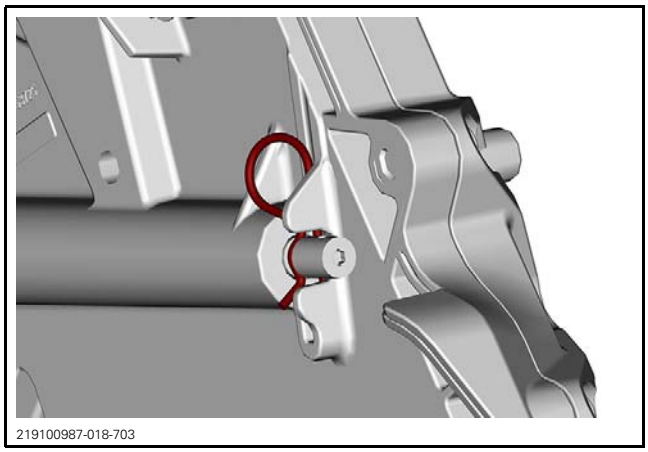
219100987-018-703

2. Remove the tensioner adjustment screw.

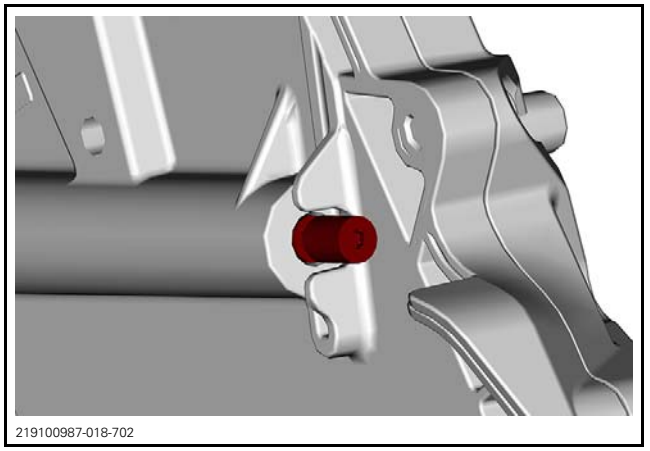
219100987-018-702

3. Remove tensioner.

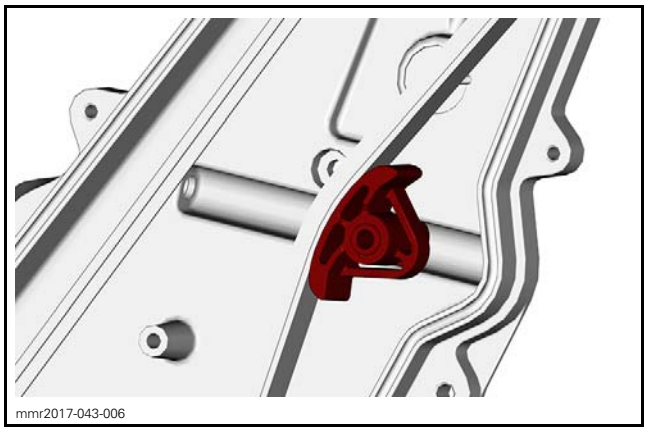
mmr2017-043-006

NOTE: The following steps are required only if the tensioner or the slider is defective.

4. Remove the circlip securing the slider to tensioner.

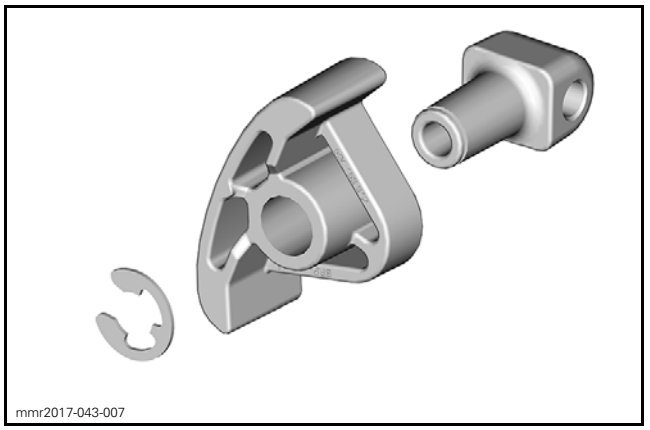
mmr2017-043-007

1. *Circlip*
2. *Tensioner*
3. *Slider*

### Removing the Drive Chain and Sprocket

NOTE: Prior to removing the drive chain, check the drive chain deflection.

1. Remove the upper sprocket screw and its conical spring washer.

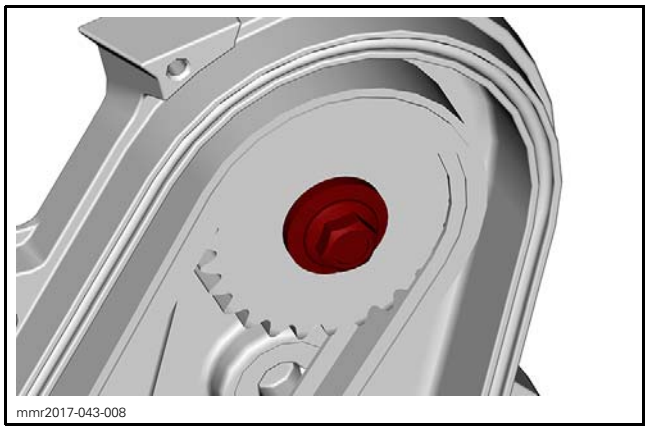
mmr2017-043-008

2. Remove the lower sprocket circlip.

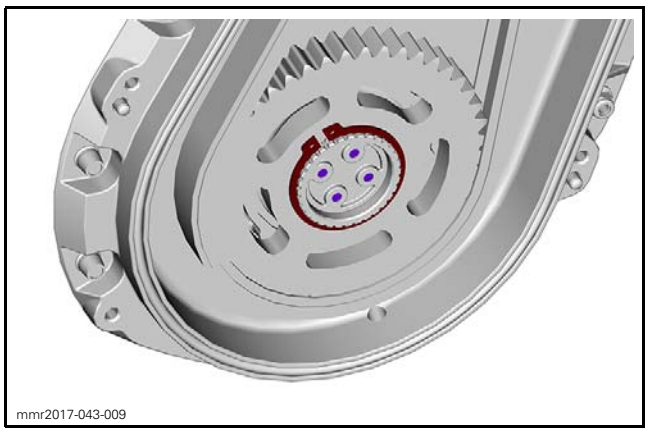
mmr2017-043-009

3. Remove the upper sprocket, lower sprocket and drive chain simultaneously.

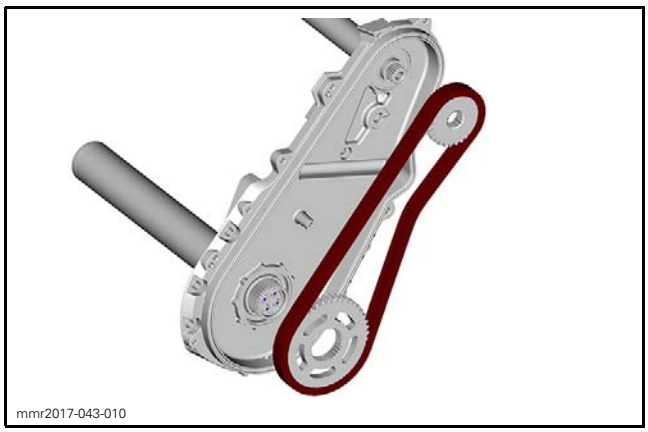
mmr2017-043-010

4. Remove the countershaft spacer.

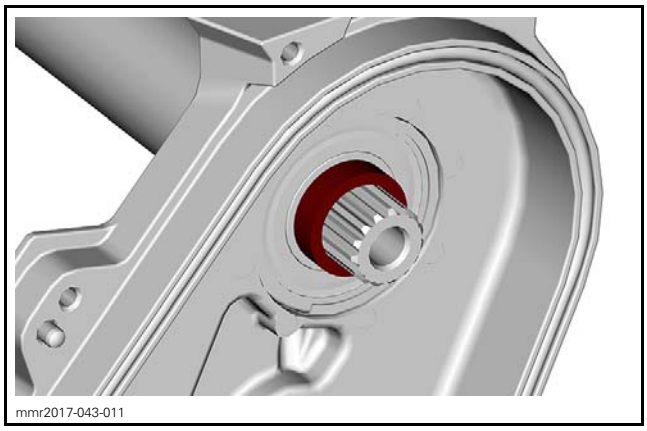
mmr2017-043-011

### Removing the Chaincase Bearing

1. Remove countershaft or drive axle, depending which bearing is replaced. Refer to the appropriate subsection, *DRIVEN PULLEY AND COUNTERSHAFT* or *DRIVE AXLE*.
2. Remove snap ring securing bearing into chaincase.

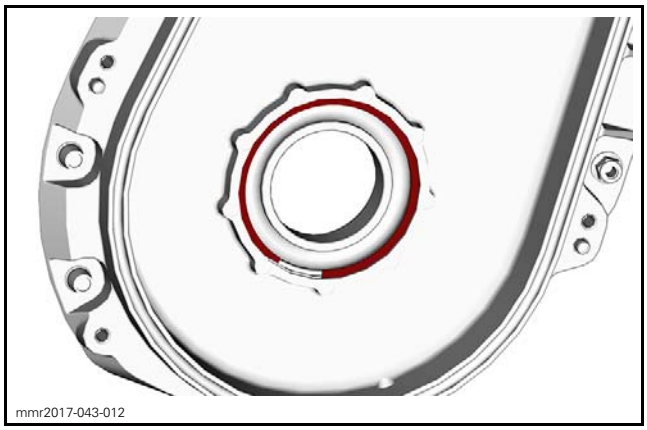
mmr2017-043-012

3. Install the appropriate bearing extractor:

| BEARING | REQUIRED TOOL |
|---|---|
| Countershaft | BEARING PULLER/PUSHER (P/N 529 036 111) |
| Drive axle | BEARING PULLER/PUSHER (P/N 529 036 112) |

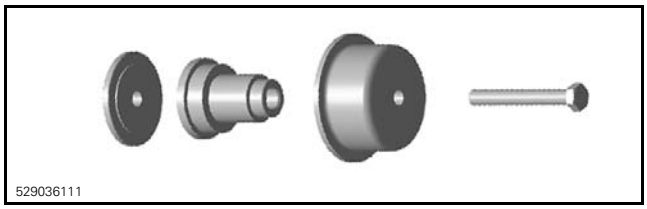
529036111

*COUNTERSHAFT*

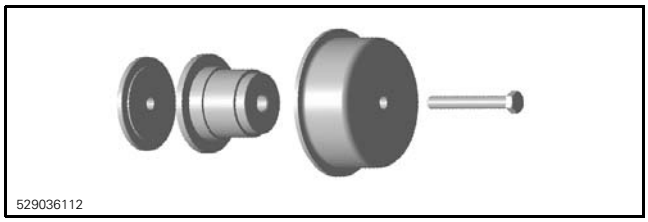


*DRIVE AXLE*

4. Install the extractor/installer tool behind the bearing.

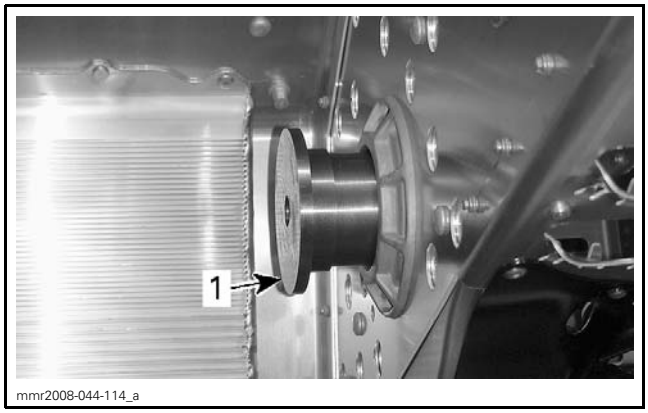


*TYPICAL*
*1. Extractor/installer tool*

5. Install the extractor cup over bearing.
6. Tighten the extractor/installer tool screw to remove the bearing.

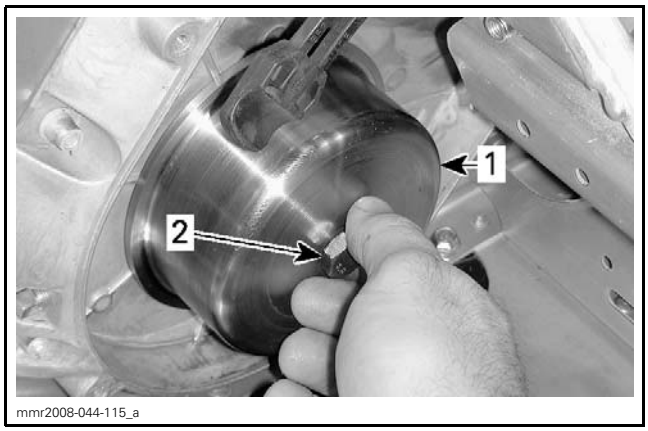


*TYPICAL*
*1. Extractor cup*
*2. Tighten to remove bearing*

7. Using a seal puller, remove and discard the oil seal.

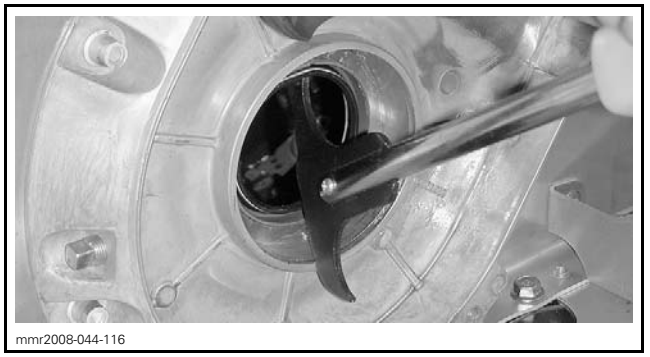


*TYPICAL*

### Removing the Chaincase Housing

IMPORTANT:Ensure you have a new mounting plate on hand along with the 5 attachment nuts before removing the chaincase assembly. Refer to the appropriate *ELECTRONIC PARTS CATALOG* that fits your model to determine required part number.

1. Remove the drive axle. Refer to *DRIVE AXLE* subsection.
2. Remove the countershaft. Refer to *DRIVEN PULLEY AND COUNTERSHAFT* subsection.
3. Remove the screw securing the coolant reservoir.

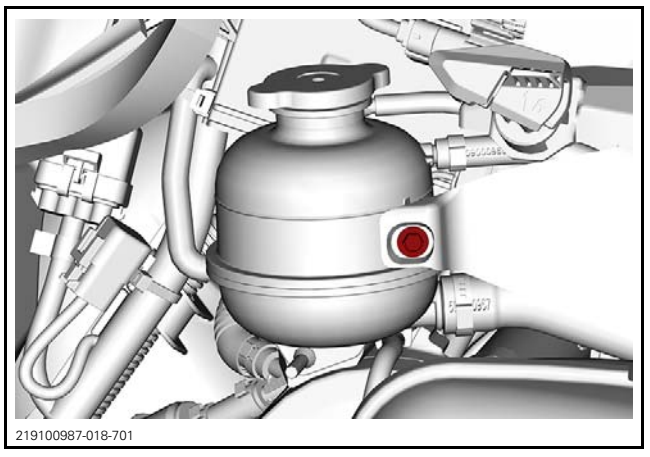


4. Remove the Huck rivets. Refer to *FRAME* subsection for proper removal procedure.

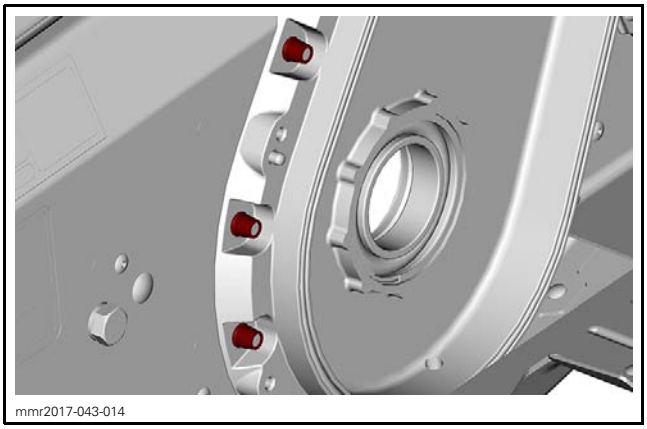
mmr2017-043-014

5. Remove nuts beside the footrest.

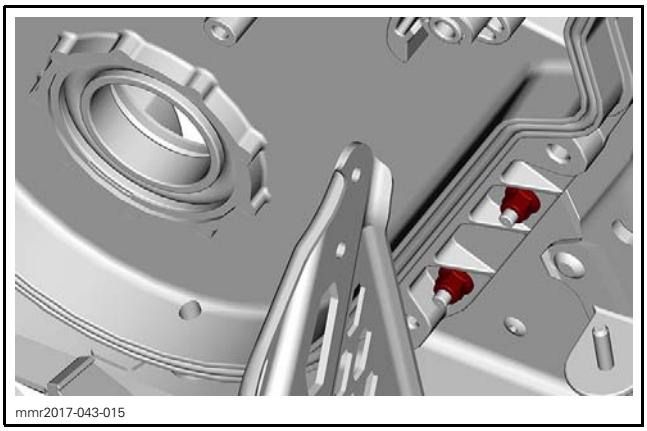
mmr2017-043-015

6. Remove the screw above the tensioner.

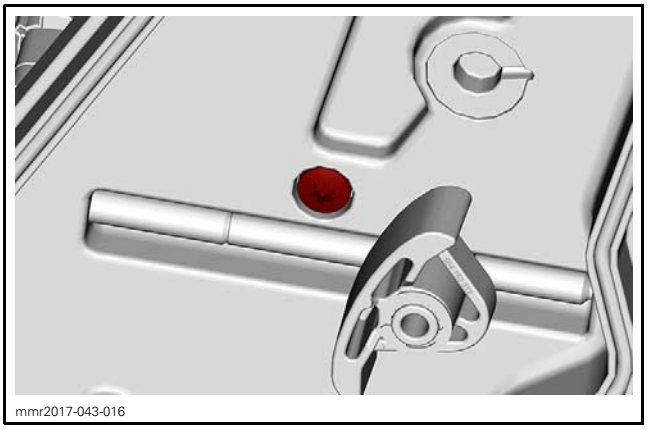
mmr2017-043-016

7. Using 2 large pry bars inserted between chaincase and frame, pry chaincase out of vehicle.
8. Remove the rewind starter rope guide screws.

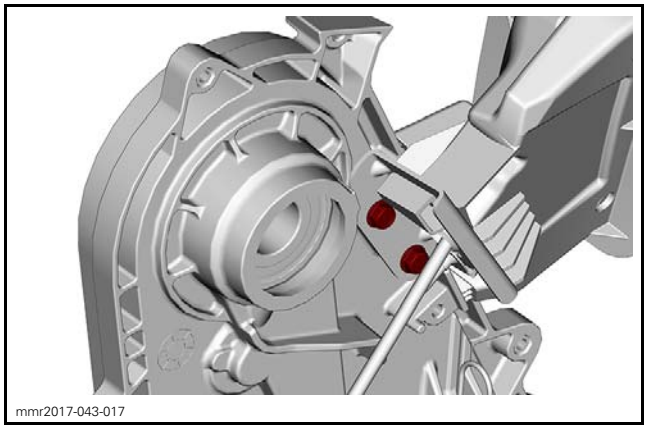
mmr2017-043-017

## Inspecting the Chaincase

### Inspecting the Chaincase Cover

Check the cover for cracks or other damages. Replace it if necessary.

Check if O-ring inside cover is brittle, hard or damaged. Replace it if necessary.

### Inspecting the Chain Tensioner

Check chain tensioner slider for wear or other damages. A longitudinal groove in the slider indicate a broken chain link. Replace if necessary.

Check threads of tensioner adjustment screw for damages or wear.

Check straightness of adjustment screw. Replace screw if necessary.Check chaincase for damages.

### Inspecting the Drive Chain and Sprockets

Visually inspect the drive chain and sprockets for:
– Wear
– Cracks
– Damages teeth
– Missing or broken links.

If a problem is detected, replace drive chain and sprockets as an assembly.

Check the drive chain deflection.

If the deflection is greater than 38 mm (1-1/2 in) without the chain tensioner, replace the drive chain.

### Inspecting the Chaincase Bearing

Check for worn or defective bearings.

## Chaincase Assembly

### Installing the Chaincase Housing

The installation is the reverse of the removal procedure. However, pay attention to the following.

Remove the clinch studs from the frame.

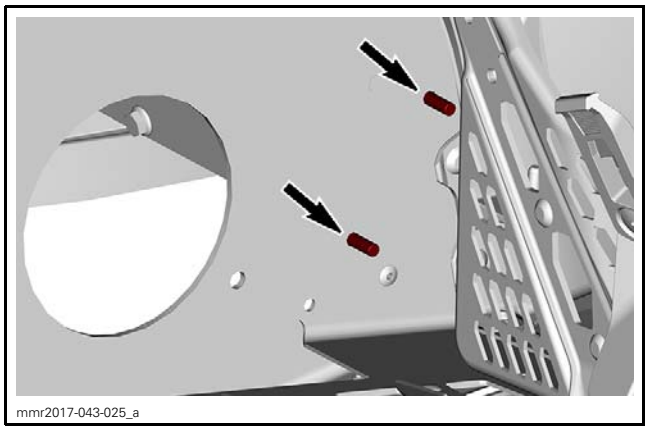
mmr2017-043-025_a

Use a suitable box to support the frame around the stud head and hit the stud from the outside with a hammer.

Install the new mounting plate underneath the frame.

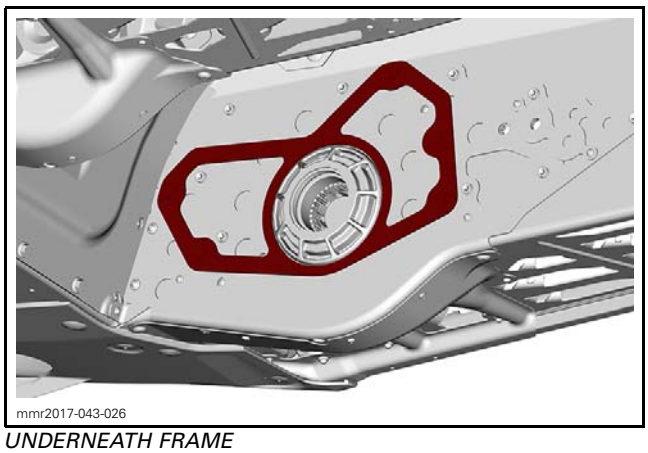
mmr2017-043-026

*UNDERNEATH FRAME*

Install 5 elastic flanged nuts to secure chaincase on mounting plate.

Tighten fasteners as per the following sequence.

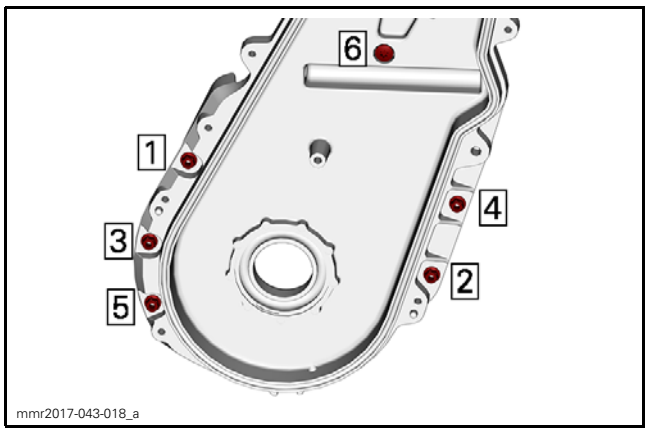

mmr2017-043-018_a

Proceed with drive chain adjustment. Refer to *PERIODIC MAINTENANCE PROCEDURES* subsection.

Refill chaincase with recommended oil. Refer to *REPLACING THE CHAINCASE OIL* in *PERIODIC MAINTENANCE PROCEDURES* subsection.

### Installing Chaincase Bearing

The installation is the reverse of the removal procedure. However, pay attention to the following.

Install the new oil seal on the extractor/installer tool. Position the lips toward bearing.

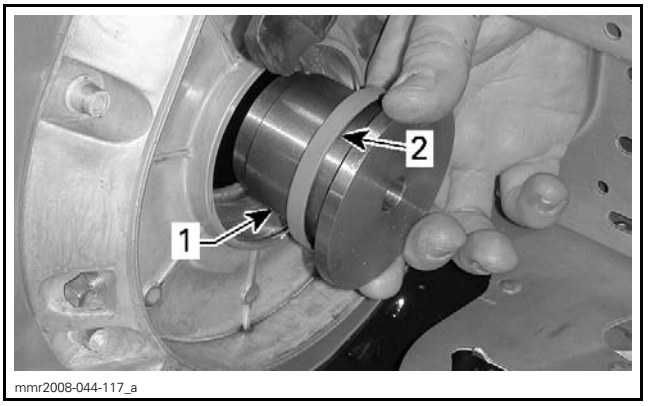

mmr2008-044-117_a

*TYPICAL*
1. *Extractor/installer tool*
2. *Oil seal lips on this side*

Install the extractor cup inside frame.

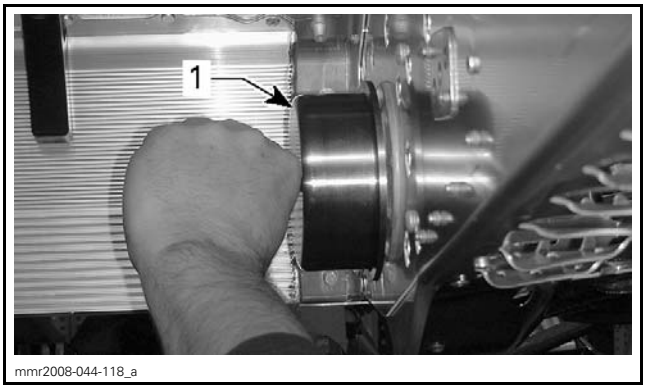

mmr2008-044-118_a

*TYPICAL*
1. *Extractor cup*

Tighten the extractor/installer tool screw to install the oil seal.

Install the large washer and the extractor/installer tool screw inside frame.

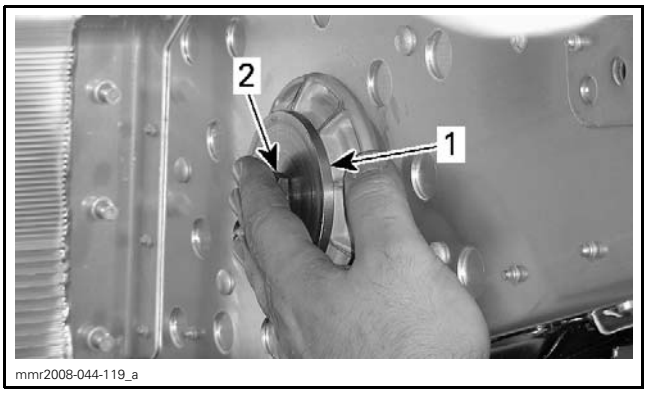


*TYPICAL*
1. *Large washer*
2. *Extractor/installer tool screw*

In chaincase, install new bearing and the extractor/installer tool.

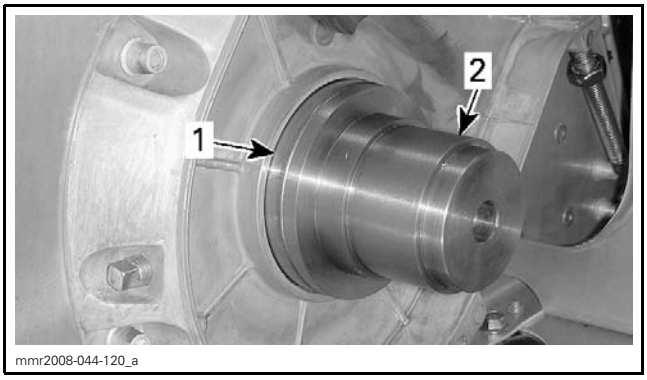


*TYPICAL*
1. *Bearing*
2. *Extractor/installer tool*

Tighten the extractor/installer tool screw to install the bearing.

Install new snap ring.

### Installing the Drive Chain and Sprockets

The installation is the reverse of the removal procedure. However, pay attention to the following.

Make sure to install sprockets with their inscriptions outward.

Install the conical spring washer on the upper sprocket with its concave side toward sprocket.

### Installing the Chain Tensioner

The installation is the reverse of the removal procedure. However, pay attention to the following.

If the tensioner has been disassembled, make sure circlip turns freely and slider moves easily.

Proceed with drive chain adjustment. Refer to *PERIODIC MAINTENANCE PROCEDURES* subsection.

### Installing the Chaincase Cover

The installation is the reverse of the removal procedure. However, pay attention to the following.

Ensure cover seal is positioned correctly in its groove.

Install new sealing washer with screw no.10. See next illustration.

Tighten chaincase cover screws in accordance with the following sequence.

*Screw 11 is present on long chaincase only.*

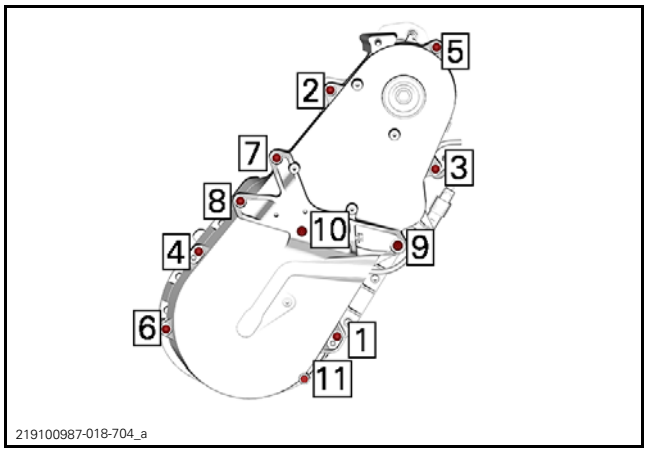


| TIGHTENING TORQUE | | |
|---|---|---|
| Screws 1 to 8 and 11 (long chaincase) | Same chaincase | 10 N•m ± 2 N•m (89 lbf•**in** ± 18 lbf•**in**) |
| | New chaincase | 15 N•m ± 1 N•m (133 lbf•**in** ± 9 lbf•**in**) |
| Screw 9 | | 24.5 N•m ± 3.5 N•m (18 lbf•ft ± 3 lbf•ft) |
| Screw 10 | | 16 N•m ± 2 N•m (142 lbf•**in** ± 18 lbf•**in**) |

Refill chaincase with recommended oil. Refer to *CHAINCASE OIL REPLACEMENT* in *PERIODIC MAINTENANCE PROCEDURES* subsection.

Reinstall all other removed parts.

## SPEED SENSOR (VSS)

The speed sensor is a hall effect sensor.

### Speed Sensor Location

The speed sensor is mounted in the chaincase cover.

### Testing the Speed Sensor Signal

1. Ensure speed sensor is properly connected.
2. Wake up ECM.

3. Back-probe VSS connector as per table and test for proper specification.

**NOTICE** Be careful not to damage connector seals when back probing.

| SPEED SENSOR (VSS) CONNECTOR | SPECIFICATION |
|---|---|
| Pin 2 | Ground |
| Pin 3 | 5 Vdc reference voltage |

If test failed, check wiring harness going to ECM.

4. Lift and support rear of vehicle.
5. Back-probe VSS connector as per table and test for proper specification.
6. Rotate track/driven pulley.

| SPEED SENSOR SIGNAL TEST | | | |
|---|---|---|---|
| ROTATE DRIVEN PULLEY | SPEED SENSOR CONNECTOR (SENSOR SIDE) | | VOLTAGE |
| | Pin 1 | Pin 2 | Alternate 7 Vdc and 0 Vdc |

If reference voltage and ground are available at sensor, but no signal, replace sensor.

NOTE: During chaincase disassembly, ensure magnets are intact on shaft.

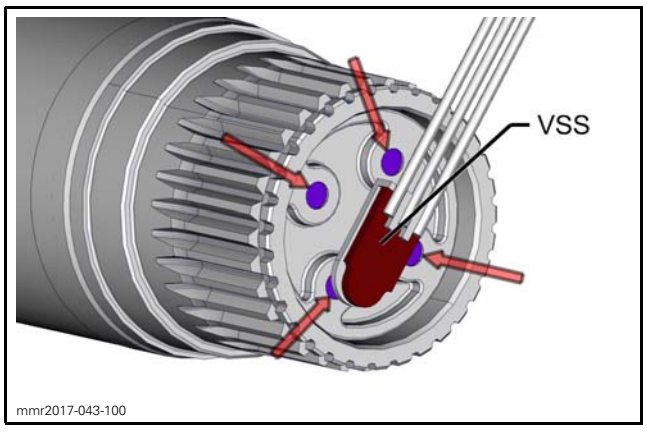


Measure the distance between magnetic cap and end of shaft. It must be as specified.

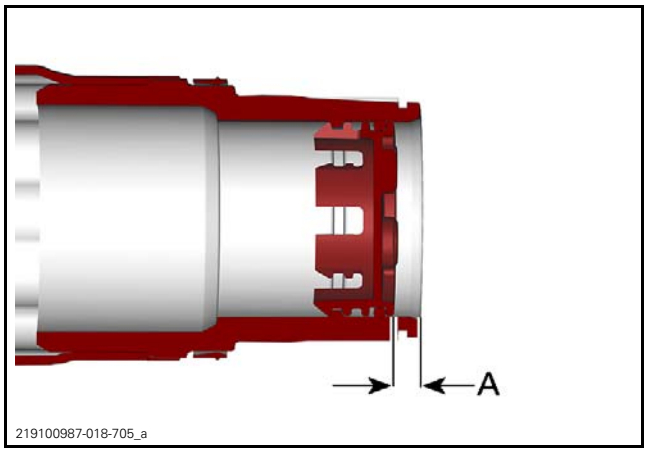


*A. Distance to measure*

| DISTANCE SPECIFICATION | |
|---|---|
| no. A Measured between magnetic cap and shaft end | 5 mm (.2 in) |

## Replacing the Speed Sensor

The sensor can be replaced with the chaincase cover as an assembly. In such a case, refer to *CHAINCASE* subsection.

To replace sensor only, proceed as follows.

### Removing the Speed Sensor

1. Remove chaincase cover. Refer to procedure in this subsection.
2. Heat the upper end of the speed sensor protective plate with a heat gun.

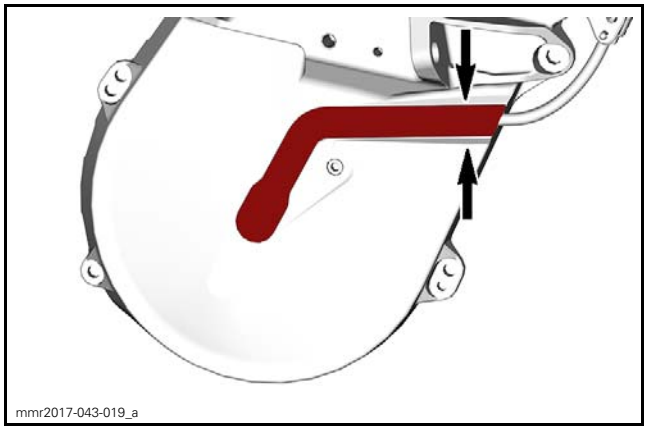


3. Use a flat screwdriver to pry out the end of the protective plate from chaincase cover.

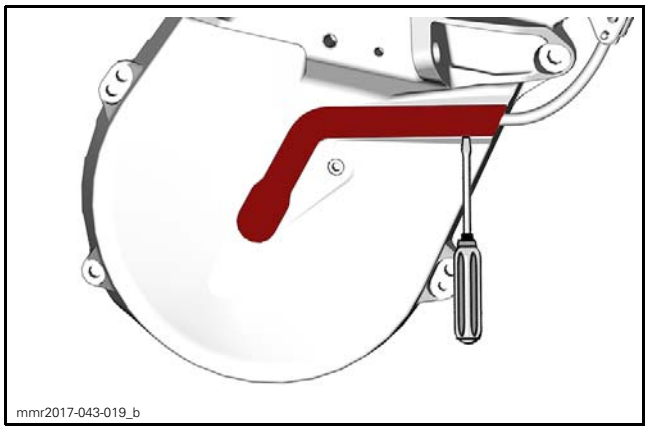


**NOTICE** Use care when prying out the plate not to damage the chaincase cover.

4. Heat the next section of the plate.
5. Pry out the heated section using the flat screwdriver.
6. Repeat steps 4 and 5 until the protective plate is completely removed.
7. Remove the speed sensor.
8. Use the flat screwdriver to remove the remaining sealant from the chaincase cover.

**NOTICE** Do not apply excessive pressure when removing the remaining sealant not to damage the chaincase cover.

9. Rub the sealant using a scouring pad.

### Installing the Speed Sensor

Make sure surface is clean and free of grease.

The assembly must be watertight.

| PRODUCT REQUIRED |
|---|
| LOCTITE 5900 (P/N 293 800 066) |

1. Apply 3 beads of sealant in the chaincase cover as per the following illustration.

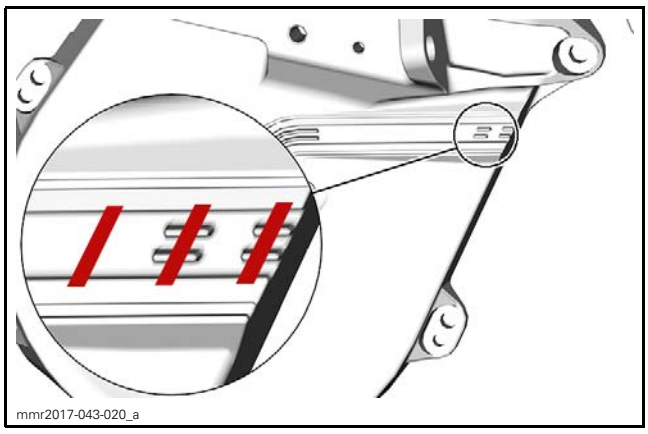


2. Install the speed sensor in the chaincase cover.

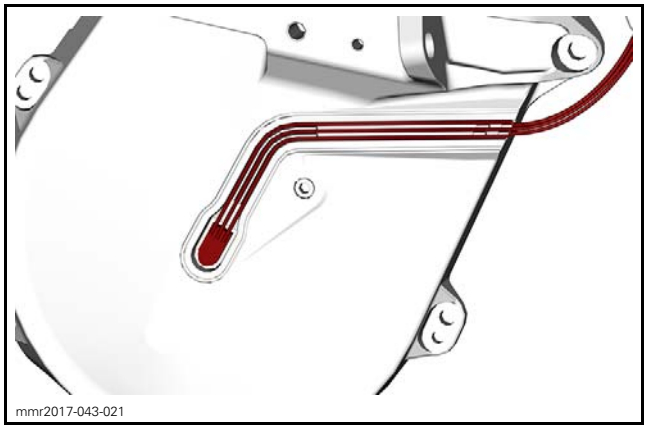


3. Apply sealant all around the protective plate bed on the chaincase cover.

Follow the pattern shown on the next picture.

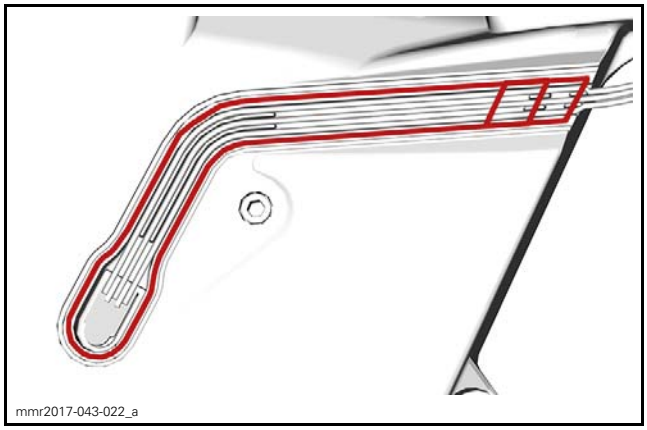


4. Place the protective plate in position and firmly push in order to evacuate all the surplus sealant. Keep pressure for at least 1 minute.
5. Wipe off all the sealant surplus.
6. Once cleaned up, inspect all the circumference for sealant lacks.

NOTE: Sealant must be visible all around.

7. Place some adhesive tape on the protective plate to maintain a pressure for at least 24 hours.

NOTE: Wait for at least 1 hour before exposing vehicle to cold temperature.

8. Reinstall chaincase cover. Refer to procedure in this subsection.

# GEARBOX (STD)

## SERVICE TOOLS


| Description | Part Number | Page |
|---|---|---|
| BEARING PULLER/PUSHER | 529 036 111 | 463 |
| BEARING PULLER/PUSHER | 529 036 112 | 463 |
| ECM ADAPTER TOOL | 529 036 166 | 451 |
| FLUKE 115 MULTIMETER | 529 035 868 | 451 |


## SERVICE PRODUCTS


| Description | Part Number | Page |
|---|---|---|
| LOCTITE 5900 | 293 800 066 | 470 |
| SYNTHETIC CHAINCASE OIL | 779156 | 452 |
| SYNTHETIC GREASE | 779162 | 455 |

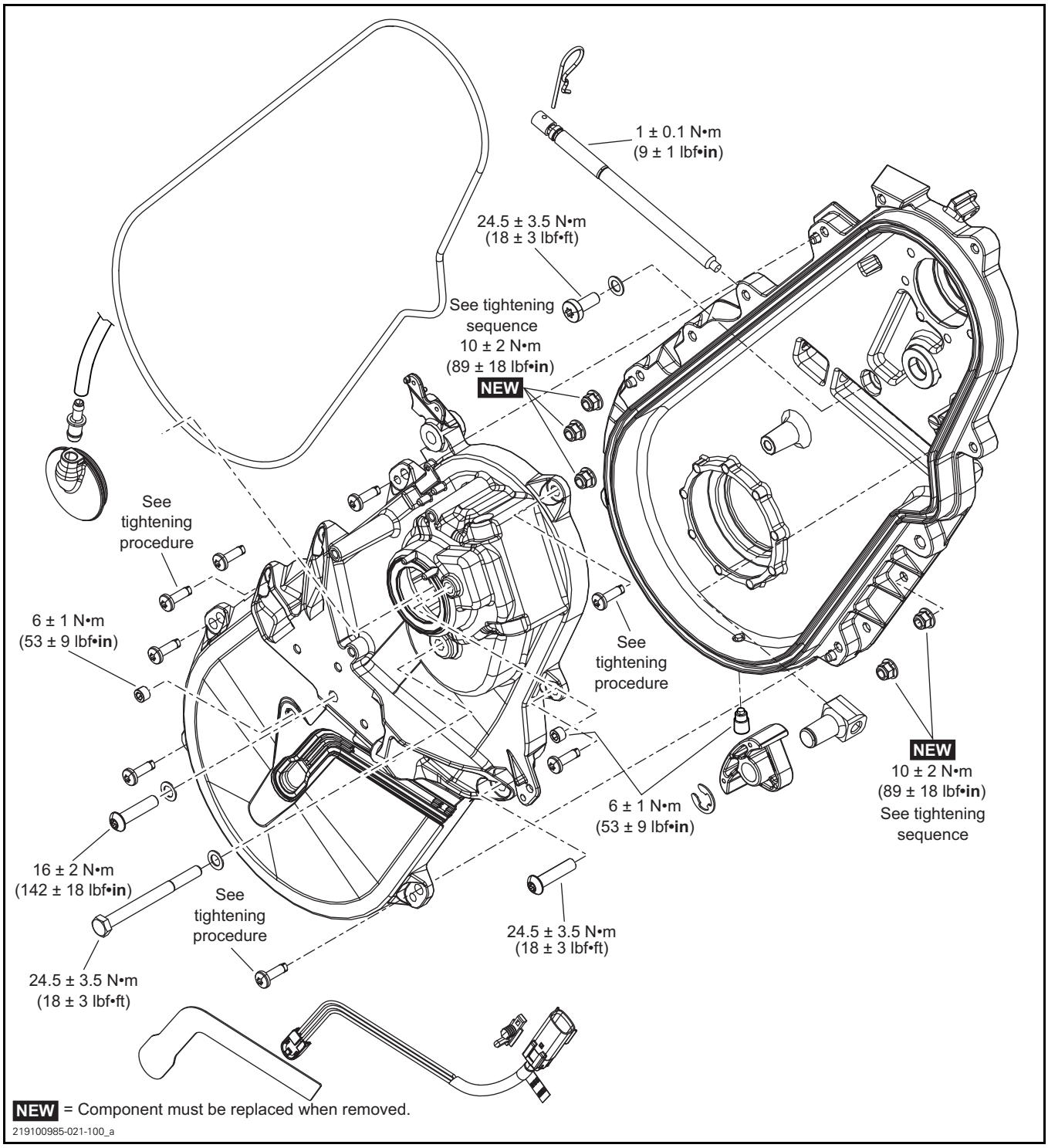
1 ± 0.1 N•m
(9 ± 1 lbf•in)
24.5 ± 3.5 N•m
(18 ± 3 lbf•ft)
See tightening sequence
10 ± 2 N•m
(89 ± 18 lbf•in)
NEW
See tightening procedure
6 ± 1 N•m
(53 ± 9 lbf•in)
See tightening procedure
NEW
10 ± 2 N•m
(89 ± 18 lbf•in)
See tightening sequence
6 ± 1 N•m
(53 ± 9 lbf•in)
16 ± 2 N•m
(142 ± 18 lbf•in)
See tightening procedure
24.5 ± 3.5 N•m
(18 ± 3 lbf•ft)
24.5 ± 3.5 N•m
(18 ± 3 lbf•ft)
NEW = Component must be replaced when removed.
219100985-021-100_a

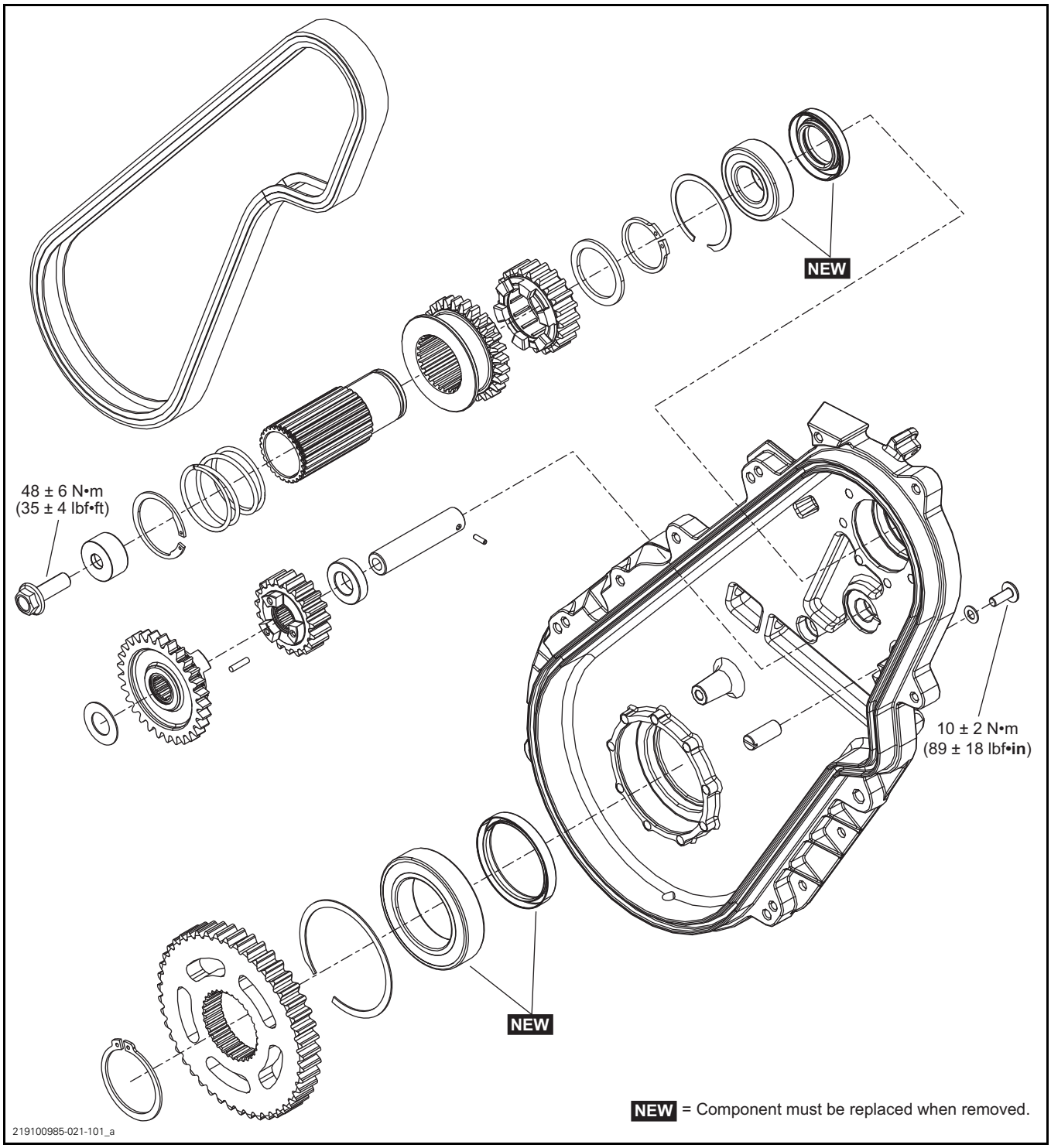
NEW
48 ± 6 N•m
(35 ± 4 lbf•ft)
10 ± 2 N•m
(89 ± 18 lbf•in)
NEW
NEW = Component must be replaced when removed.
219100985-021-101_a

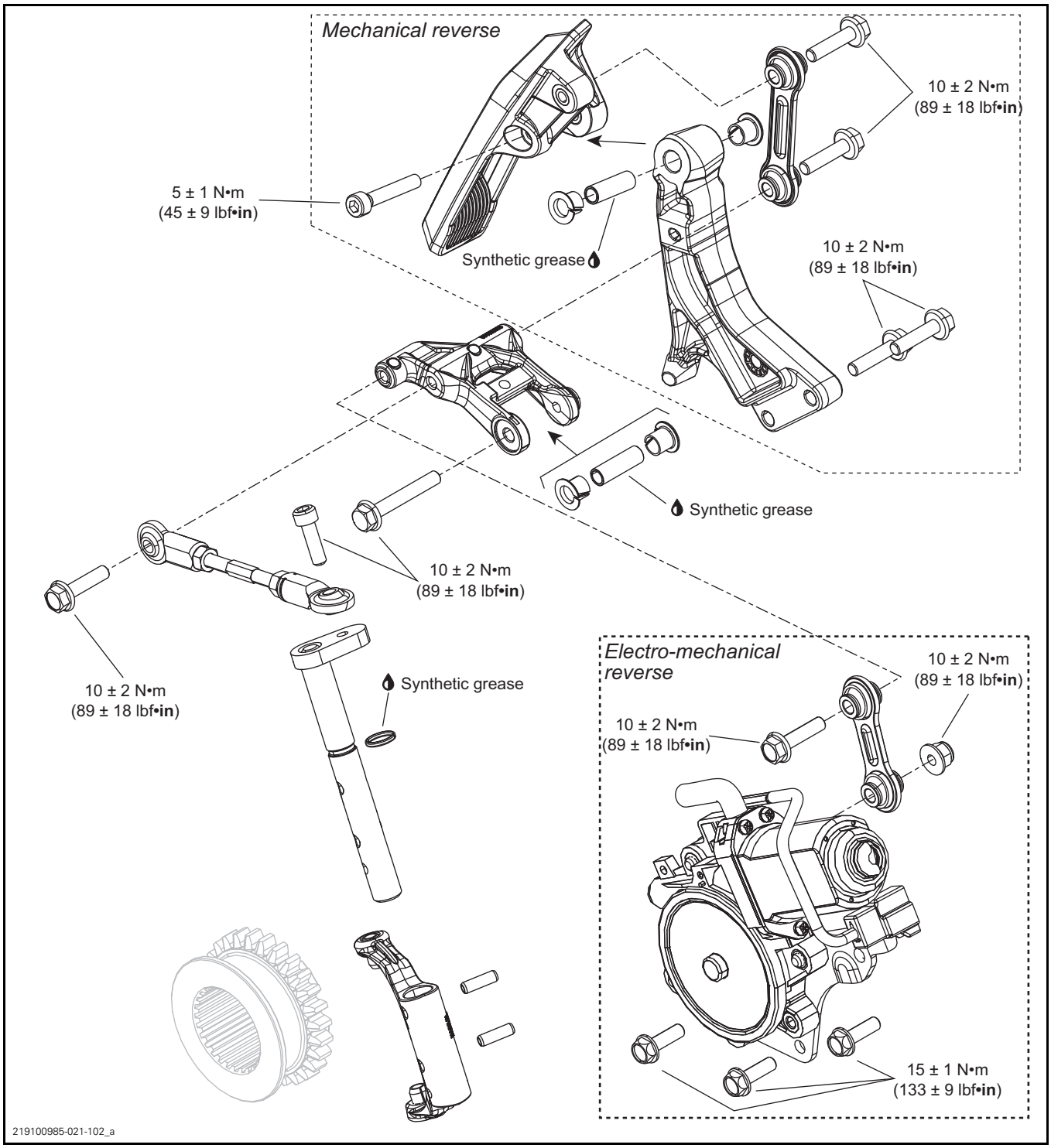
Mechanical reverse
10 ± 2 N•m
(89 ± 18 lbf•in)
5 ± 1 N•m
(45 ± 9 lbf•in)
Synthetic grease
10 ± 2 N•m
(89 ± 18 lbf•in)
Synthetic grease
10 ± 2 N•m
(89 ± 18 lbf•in)
10 ± 2 N•m
(89 ± 18 lbf•in)
Synthetic grease
Electro-mechanical reverse
10 ± 2 N•m
(89 ± 18 lbf•in)
10 ± 2 N•m
(89 ± 18 lbf•in)
15 ± 1 N•m
(133 ± 9 lbf•in)
219100985-021-102_a

# GENERAL

The following tools are required to test most of the electrical parts.

| REQUIRED TOOLS | |
|---|---|
| FLUKE 115 MULTIMETER (P/N 529 035 868) |  |
| ECM ADAPTER TOOL (P/N 529 036 166) |  |

During assembly or installation, use the torque values and service products as in the exploded view.

Clean threads before applying a threadlocker. Refer to *SELF-LOCKING FASTENERS* and *LOCTITE APPLICATION* at the beginning of this manual for complete procedure.

**⚠ WARNING**

**Torque wrench tightening specifications must be strictly adhered to.**
**Locking devices when removed (e.g.: locking tabs, elastic stop nuts, cotter pin, etc.) must be replaced with new ones.**

***NOTICE*** **Hoses, cables and locking ties removed during a procedure must be reinstalled as per factory standards.**

## SYSTEM DESCRIPTION

### Mechanical Reverse

This reverse system integrated in the chaincase is controlled mechanically by link rods. When reverse handle is engaged, the shift fork moves sliding gear and switches its power to the reverse sprocket. This reverse sprocket turns backwards and transmits its power to the lower sprocket. When the mechanism is engaged forward, it works like a normal chaincase with the upper sprocket giving its power to the lower sprocket.

### Electro-Mechanical Reverse

This system works mechanically the same way as the mechanical reverse, except that the sliding gear is controlled electrically by the ECM and the electrical actuator. When the START/RER button is pressed, the ECM transmits its signal through either the reverse or forward relay to the electric motor. The ECM will not engage the reverse if the engine RPM is above 2200 or the vehicle speed is above 1 km/h.

# ADJUSTMENT

## SHIFTER LINK ROD ADJUSTMENT

***NOTICE*** **It is of the uppermost importance for the adjustment reliability to follow entirely this procedure.**

*Electro-Mechanical Reverse*

1. Remove link screw from the shifter lever.

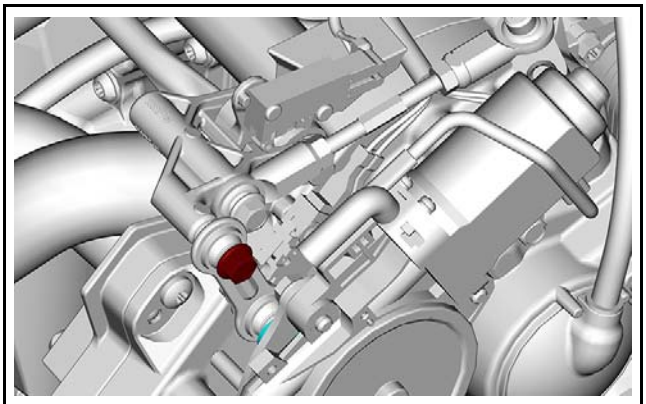

219100985-021-005

*Mechanical and Electro-Mechanical Reverse*

1. Lift rear of vehicle and support it off the ground.
2. Rotate driven pulley a few turns to ensure reverse mechanism is properly engaged.
3. Verify gap between shifter lever and chaincase front stopper using a feeler gauge. Refer to the following table.

| SHIFT LINKAGE ADJUSTMENT | |
|---|---|
| Gap **no. A** | 0.4 mm to 0.6 mm (.016 in to .024 in) |

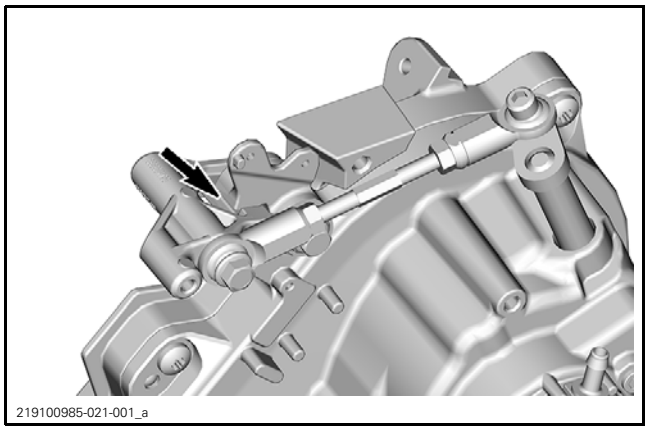
219100985-021-001_a

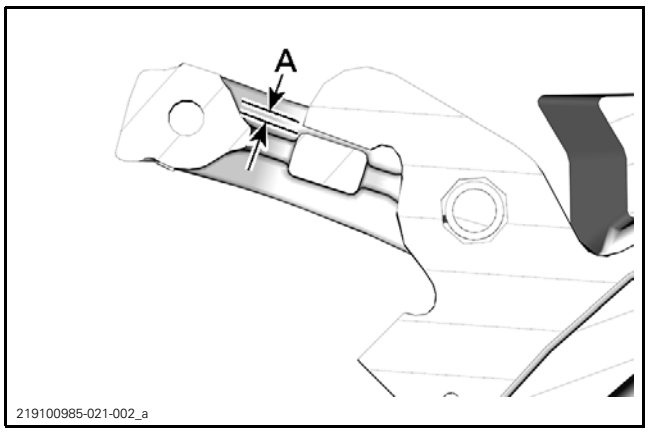

219100985-021-002_a

*A. Gap = 0.4 mm to 0.6 mm (.016 in to .024 in)*

4. If gap is out of specification, adjust shifter link rod as follows.
   4.1 Loosen link rod lock nuts.

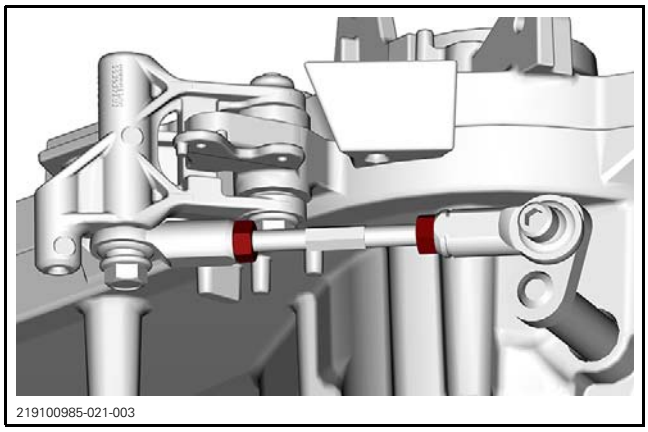
219100985-021-003

   4.2 Turn link rod accordingly.

   NOTE: Turn the link rod clockwise to reduce the gap and counterclockwise to increase the gap.

   4.3 Tighten link rod lock nuts.
5. Engage and release reverse mechanism 10 times using reverse handle or shifter lever.
6. Rotate driven pulley a few turns to ensure reverse mechanism is properly engaged.
7. Verify again adjustment gap. Readjust if necessary.

# MAINTENANCE

## CHAINCASE OIL

### Recommended Chaincase Oil

| RECOMMENDED SERVICE PRODUCT |
|---|
| SYNTHETIC CHAINCASE OIL (P/N 779156) |

**NOTICE** Use only the recommended type oil when servicing. Do not mix synthetic oil with other types of oil.

### Verifying the Chaincase Oil Level

1. Place vehicle on a level surface.
2. Remove the check plug beside the speed sensor on the chaincase cover. Oil level must be equal with the lower edge.

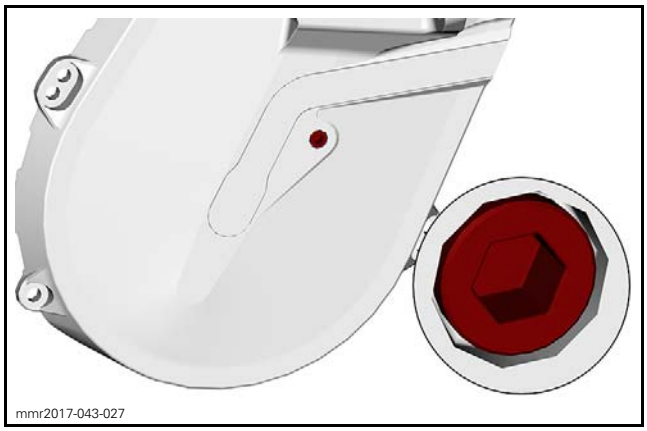
mmr2017-043-027

3. Remove metal particles from magnetic check plug.

NOTE: It is normal to find metallic particles stuck to magnetic check plug. If bigger pieces of metal are found, remove the chaincase cover and inspect the chaincase parts.

4. To add oil, remove the filler cap on top of chaincase cover.

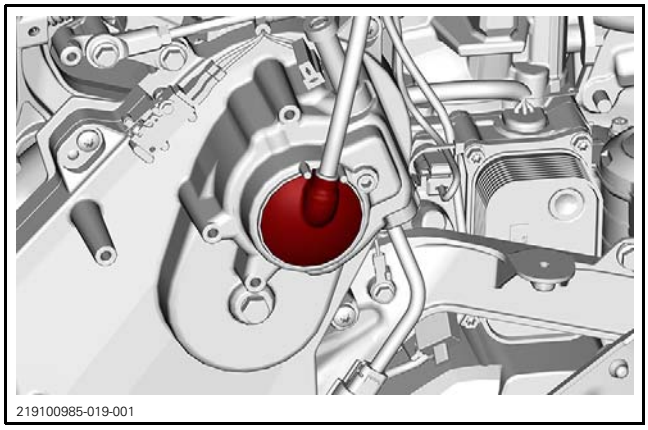
219100985-019-001

5. Pour recommended oil in chaincase by the filler hole until oil comes out by the magnetic check plug hole.
6. Reinstall magnetic check plug and torque to specification.

| TIGHTENING TORQUE | |
|---|---|
| Magnetic check plug | 6 N•m ± 1 N•m (53 lbf•**in** ± 9 lbf•**in**) |

## Replacing the Chaincase Oil

1. Place vehicle on a level surface.
2. Place a container under vehicle in line with chaincase to catch chaincase oil.
3. Remove the filler plug.

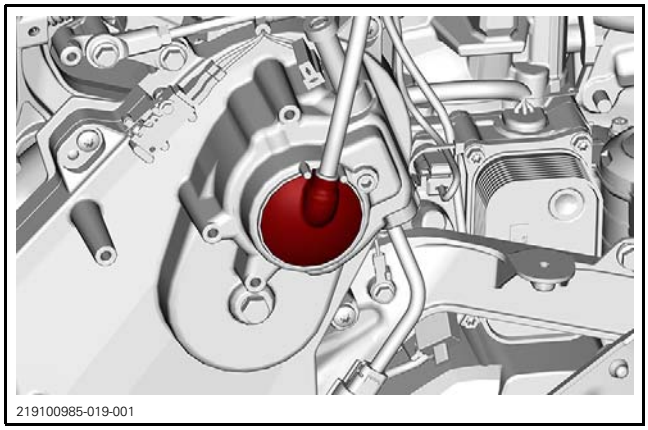
219100985-019-001

4. Remove the drain plug on the bottom of the chaincase.

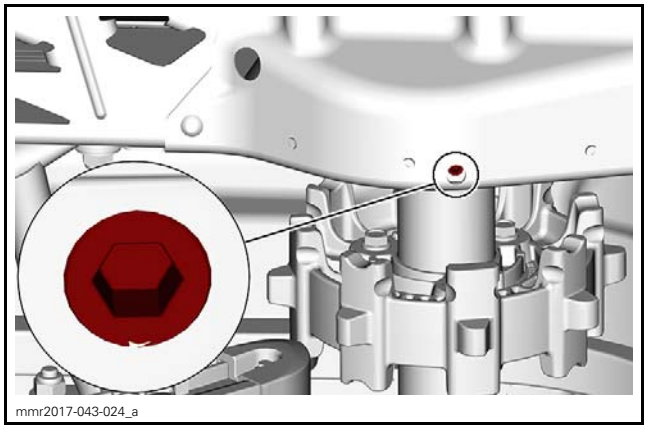
mmr2017-043-024_a

5. Reinstall the drain plug.

| TIGHTENING TORQUE | |
|---|---|
| Drain plug | 6 N•m ± 1 N•m (53 lbf•**in** ± 9 lbf•**in**) |

6. Remove the magnetic check plug.
7. Pour approximately 550 ml (19 U.S. oz) of recommended oil in chaincase through the filler hole until oil comes out by the magnetic check plug hole.
8. Clean the magnetic check plug. Refer to *CHAINCASE OIL LEVEL VERIFICATION*, see procedure in this subsection.

# DRIVE CHAIN

## Adjusting the Drive Chain

1. Remove the hair pin from behind the chaincase.

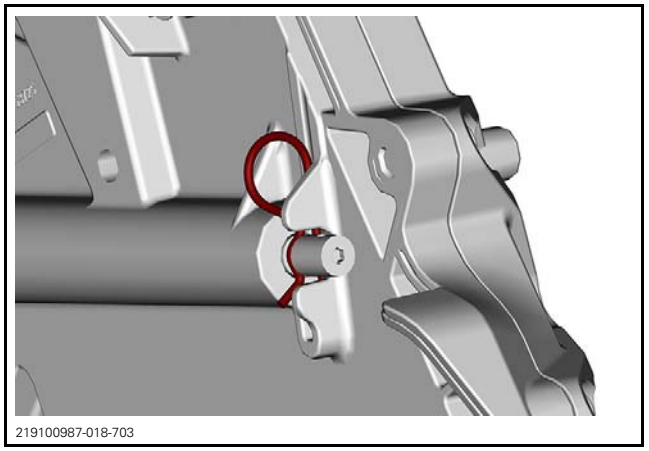
219100987-018-703

2. Tighten tensioner adjustment screw **BY HAND**.

NOTE: Turn adjustment screw until resistance is strong enough that it can not be turned by hand.

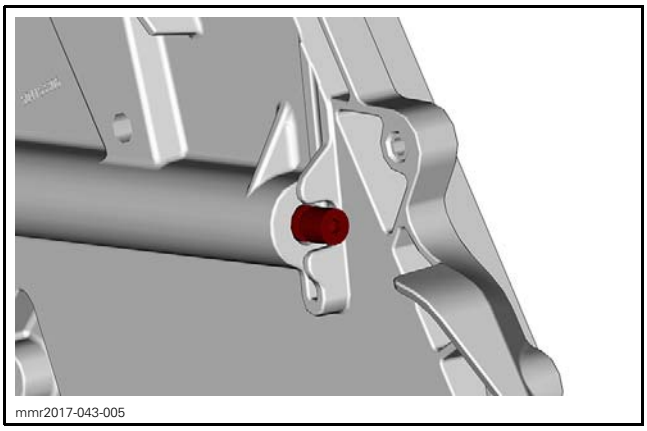
mmr2017-043-005

3. Reinstall the hair pin.

# TROUBLESHOOTING

## DIAGNOSTIC TIPS (ELECTRO-MECHANICAL REVERSE)

### BUDS2 Configuration

If the electro-mechanical reverse is not working, make sure the required option is selected in BUDS2. Otherwise, the electro-mechanical reverse will not work and no fault code will be set.

### Fault Code P0736

The fault code P0736 can appear for different reasons that are not necessarily a failure of the electro-mechanical reverse. It can appear for the following reason:

– Reverse gears are not aligned in chaincase to engage properly.

If fault code appears:

1. Clear the fault using BUDS2
2. Lift rear of vehicle and support it off the ground
3. Rotate driven pulley a few turns to move gears in chaincase
4. Retry changing gears.

If fault code appears again:

– Check drive belt height (refer to *DRIVE BELT* subsection)
– Check shift linkage adjustment. Refer to procedure in this subsection.

If fault code persist:

– Refer to *TESTING SEQUENCE* below.

## TESTING SEQUENCE (ELECTRO-MECHANICAL REVERSE)

### Reverse Does Not Engage

First, make sure the following settings are as per specifications:

– Drive belt height
– Shift linkage adjustment.

If BUDS2 is properly configured, drive belt and shift linkage are properly adjusted, follow this testing sequence to diagnose problem:

1. Check reverse position switch (RVPS) continuity.
2. Check actuator fuse.
3. Check actuator connector.
4. Check relays continuity.
5. Check actuator operation.
6. Check input voltage to actuator.
7. Check input voltage to relays.
8. Check relay grounds.
9. Check relay ground signals.
10. Check ECM ground continuity.

Refer to the appropriate topic to see the complete testing procedures.

# PROCEDURES

## SHIFT LEVER

### Removing the Shift Lever

1. Remove the following screws.

*Mechanical Reverse*

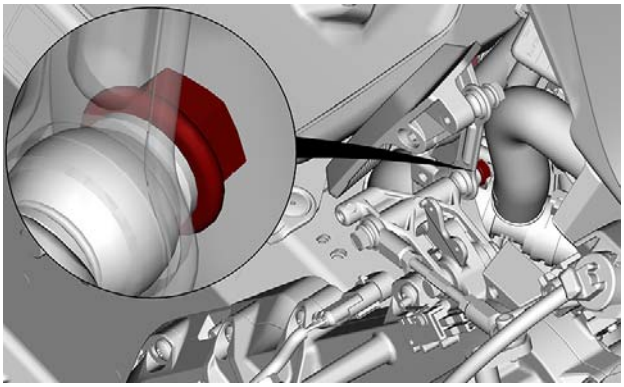
219100985-021-004

*Electro-Mechanical Reverse*

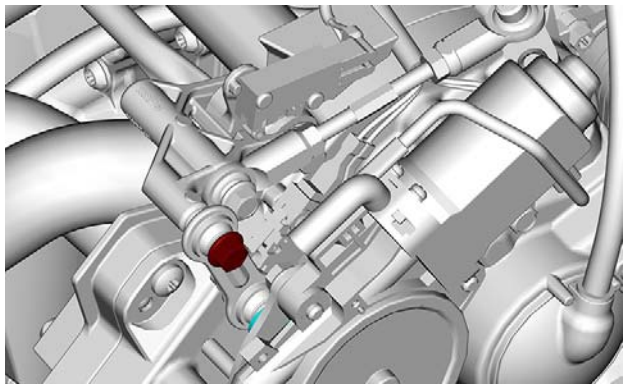

219100985-021-005

*All Reverse*

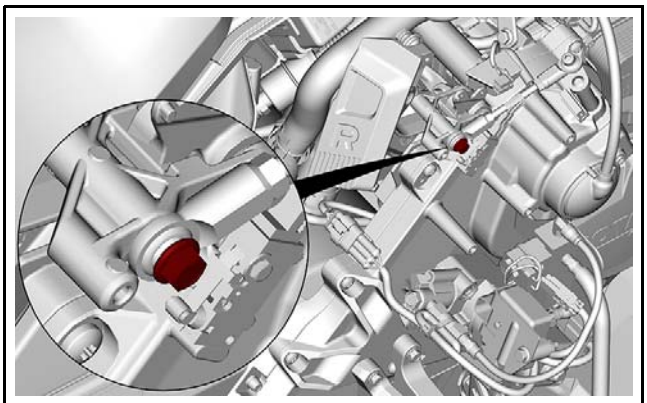

219100985-021-006

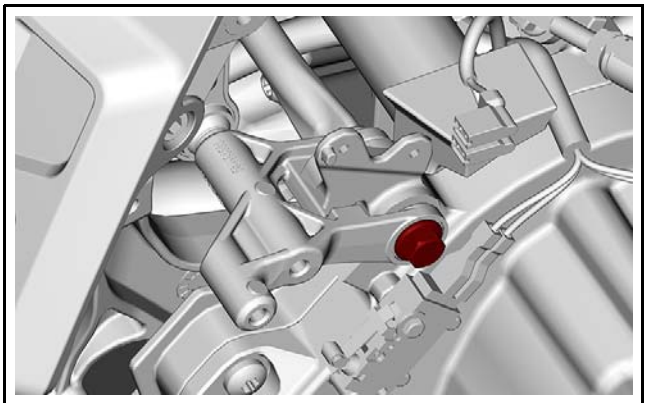

219100985-021-007

## Installing the Shift Lever

The installation is the reverse of the removal procedure. However, pay attention to the following.

Lubricate shift lever pivots and moving parts.

| SERVICE PRODUCT |
| --- |
| SYNTHETIC GREASE (P/N 779162) |

Refer to exploded view for appropriate tightening torque.

# ELECTRO-MECHANICAL REVERSE

## Removing the Actuator

**⚠ WARNING**

Battery BLACK (–) cable must always be disconnected first and connected last.

1. Disconnect BLACK negative cable from battery.

*Models with ACS*

2. Disconnect compressor connector.
3. Remove ACS compressor module support screws.

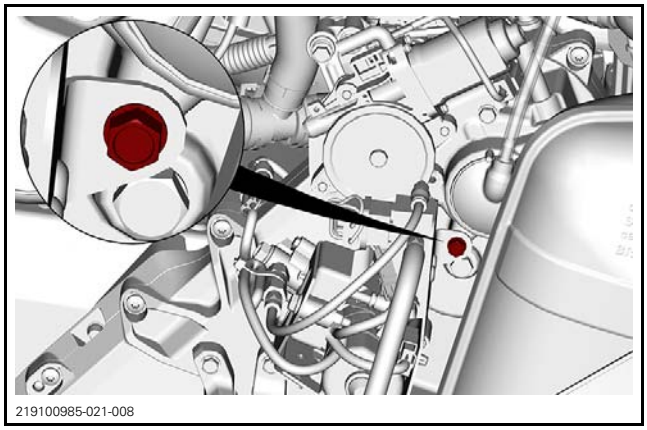

219100985-021-008

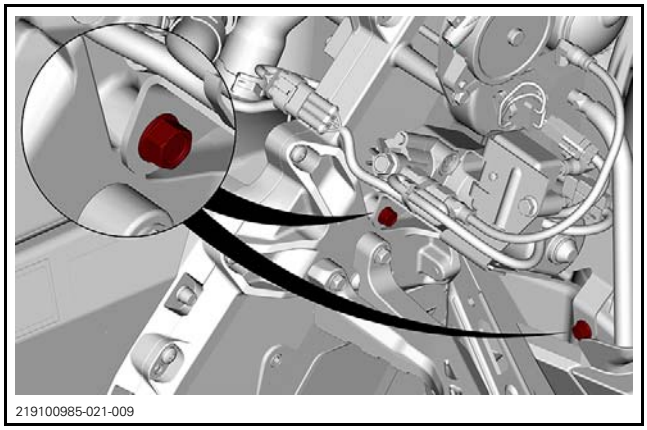

219100985-021-009

4. Move the ACS assembly aside.

*All Models*

5. Disconnect actuator connector.

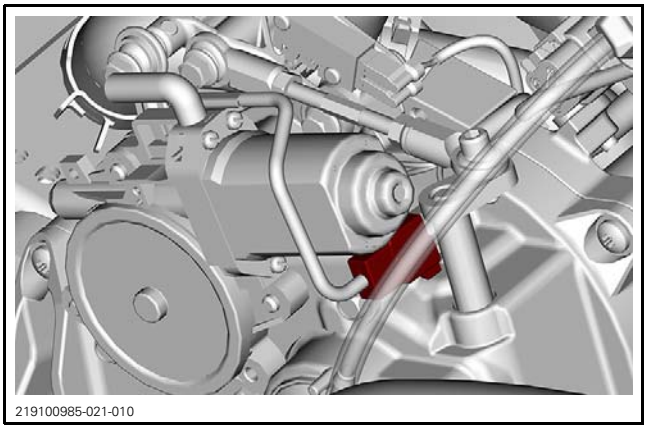
219100985-021-010

6. Remove actuator link nut.

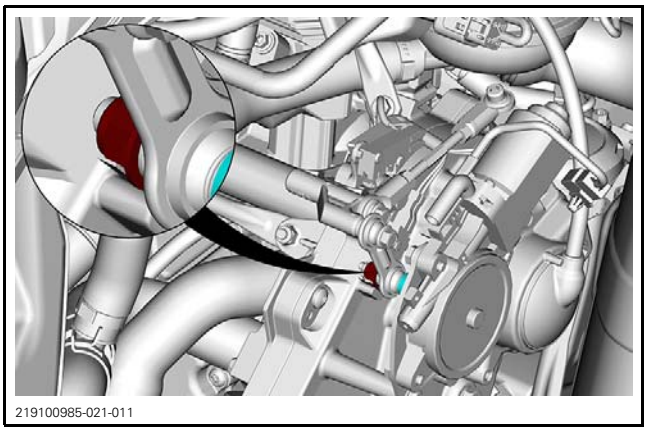
219100985-021-011

7. Remove actuator support screws.

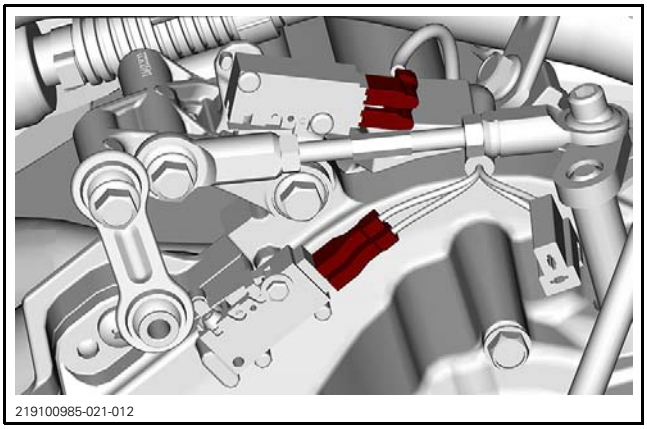
219100985-021-012

8. Remove the actuator from vehicle.

## Inspecting the Actuator

Inspect actuator connector for corrosion, clean if necessary.

Inspect RVPS switches for correct spring tension when pressed and released, replace if necessary.

Inspect actuator coupling shaft for straightness, replace if necessary.

Inspect actuator stopper in support for straightness.

## Installing the Actuator

The installation is the reverse of the removal procedure. However, pay attention to the following.

Lubricate shifter pivots and moving parts.

Tighten coupling shaft nut to specification.

| TIGHTENING TORQUE | |
|---|---|
| Actuator coupling shaft nut | 7 N•m ± 0.5 N•m (62 lbf•**in** ± 4 lbf•**in**) |

## Testing the Actuator Operation

***NOTICE*** **Do not power motor directly with the battery for a long period. Apply voltage quickly to ensure that the motor will not overheat at the end of its stroke.**

1. Remove actuator coupling shaft nut.

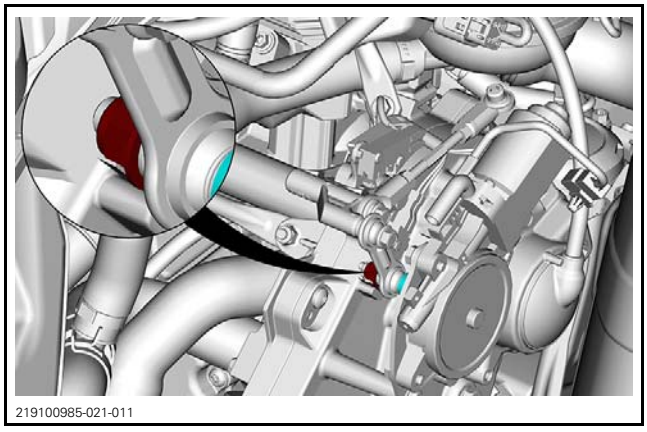
219100985-021-011

2. Disconnect actuator connector.

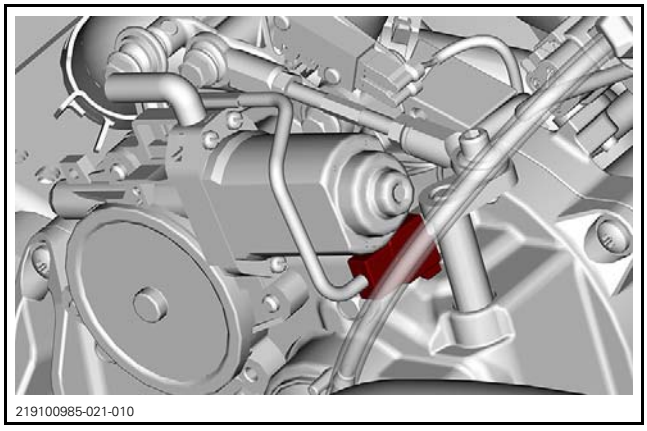
219100985-021-010

3. Connect actuator connector pin 2 (BLACK wire) to a 20 A suitable fuse jumper and then directly to the positive battery post.

4. Connect actuator connector pin 1 (RED wire) directly to the negative battery post.

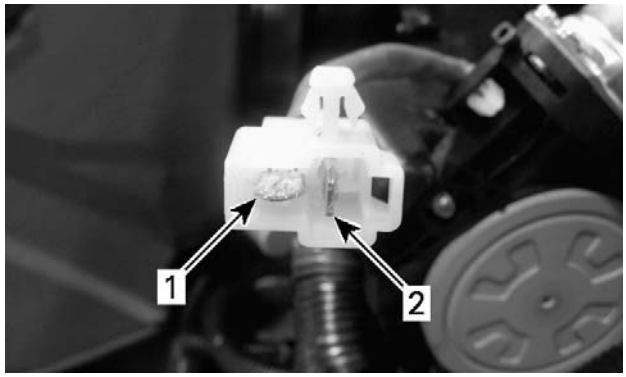


*1. Pin 1 (RED wire)*
*2. Pin 2 (BLUE wire)*

5. Verify if actuator works properly.
6. Invert battery polarities and verify if actuator works properly in the opposite direction.

## Testing the Actuator Input Voltage

1. Set the multimeter to Vdc.
2. Disconnect actuator connector.

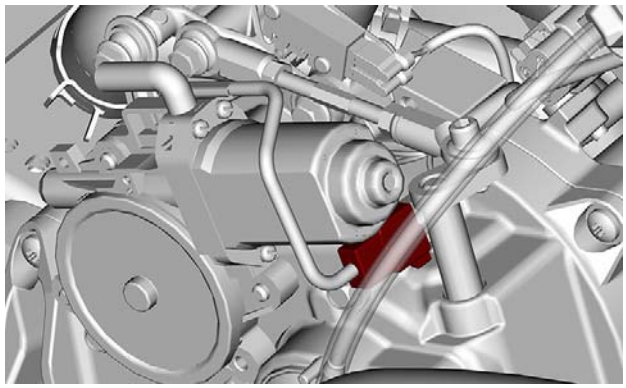


3. Start engine.
4. Press on START/RER button while engine run at idle.
5. Measure voltage between harness connector terminals as per the following table.

| TEST PROBES | MEASUREMENT |
|---|---|
| Pin 1 | Battery voltage (~12 Vdc) |
| Pin 2 | |

If measure is not as per specification, test:
– The battery voltage
– The actuator relay and fuse
– The actuator circuit continuity.

Refer to electrical diagram for more information.

## Testing the Relay Continuity

1. Remove relays.
2. Set the multimeter to Ω.
3. Measure resistance as per the following table.

| TEST PROBES | RESISTANCE |
|---|---|
| Terminal 30 | Open (OL) |
| Terminal 87 | |

4. Measure resistance as per the following table.

| TEST PROBES | RESISTANCE |
|---|---|
| Terminal 30 | Close to 0 Ω |
| Terminal 87a | |

5. Apply 12 volts on terminals 85 and 86.
6. Measure resistance again as per the following table.

| TEST PROBES | RESISTANCE |
|---|---|
| Terminal 30 | Close to 0 Ω |
| Terminal 87 | |

7. Apply 12 volts on terminals 85 and 86.
8. Measure resistance again as per the following table.

| TEST PROBES | RESISTANCE |
|---|---|
| Terminal 30 | Open (OL) |
| Terminal 87a | |

If results are not as per the above tables, replace relay.

## Testing the Relay Input Voltage

1. Set the multimeter to Vdc.
2. Start engine.
3. Measure voltage as per the following tables.

| FORWARD AND REVERSE RELAYS | |
|---|---|
| TEST PROBES | VOLTAGE |
| Pin 86 | Battery voltage (~12 Vdc) |
| Battery negative (-) post | |

| FORWARD AND REVERSE RELAYS | |
|---|---|
| TEST PROBES | VOLTAGE |
| Pin 87 | Battery voltage (~12 Vdc) |
| Battery negative (-) post | |

If voltage is not as specified, repair open circuit in wiring. Refer to *WIRING DIAGRAM*.

## Testing the Relay Ground

1. Set the multimeter to Vdc.
2. Start engine.
3. Measure voltage as per the following table.

| FORWARD AND REVERSE RELAYS | |
|---|---|
| TEST PROBES | VOLTAGE |
| Pin 87a | Battery voltage (~12 Vdc) |
| Battery positive (+) post | |

If voltage is not as specified, repair open circuit in wiring. Refer to *WIRING DIAGRAM*.

## Testing the Relay Ground Signal

### Forward Relay

For this test, electronic reverse must be set in reverse position.

NOTE: The measured voltage will be transmitted during a short period of time.

1. Set the multimeter to Vdc.
2. Start engine and let it run at idle.
3. Press on START/RER button while measuring voltage as per the following table.

| FORWARD RELAY | |
|---|---|
| TEST PROBES | VOLTAGE |
| Pin 85 | Battery voltage (~12 Vdc) |
| Battery positive (+) post | |

If voltage is not as specified, repair open circuit in wiring. Refer to *WIRING DIAGRAM*.

### Reverse Relay

For this test, electronic reverse must be set in forward position.

NOTE: The measured voltage will be transmitted during a short period of time.

1. Set the multimeter to Vdc.
2. Start engine and let it run at idle.
3. Press on START/RER button while measuring voltage as per the following table.

| REVERSE RELAY | |
|---|---|
| TEST PROBES | VOLTAGE |
| Pin 85 | Battery voltage (~12 Vdc) |
| Battery positive (+) post | |

If voltage is not as specified, repair open circuit in wiring. Refer to *WIRING DIAGRAM*.

## Testing the ECM Ground Continuity

### Forward Relay

1. Disconnect ECM connector "A".
2. Install connector "A" on the ECM adapter tool.
3. Set the multimeter to Ω.
4. Measure resistance as per the following table.

| FORWARD RELAY | |
|---|---|
| TEST PROBES | RESISTANCE |
| ECM pin A-13 | Close to 0 Ω |
| Relay pin 85 | |

### Reverse Relay

1. Disconnect ECM connector "B".
2. Install connector "B" on the ECM adapter tool.
3. Set the multimeter to Ω.
4. Measure resistance as per the following table.

| REVERSE RELAY | |
|---|---|
| TEST PROBES | RESISTANCE |
| ECM pin B-33 | Close to 0 Ω |
| Relay pin 85 | |

# REVERSE MECANISM POSITION SWITCHES

## Testing the Switches Continuity

1. Disconnect Reverse Position Switch (RVPS) and Forward Position Switch (FWPS) connectors.

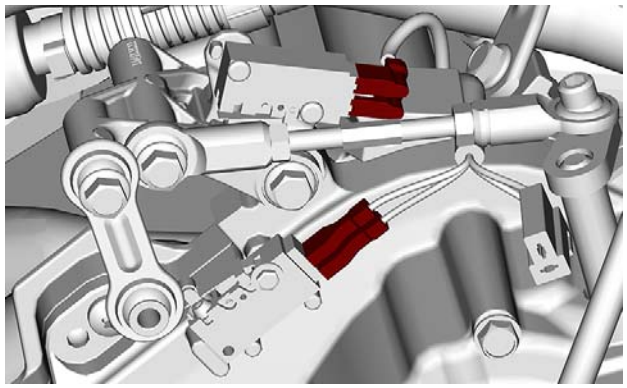
219100985-021-012

2. Set the multimeter to Ω.
3. Release RVPS.
4. Measure resistance as per the following table.

| TEST PROBES | RESISTANCE |
|---|---|
| Pin 1 | Open (OL) |
| Pin 2 | |

5. Press RVPS.
6. Measure resistance again as per the following table.

| TEST PROBES | RESISTANCE |
|---|---|
| Pin 1 | Close to 0 Ω |
| Pin 2 | |

If results are not as per the above tables, replace RVPS.

Repeat the test for the FWPS.

### Replacing the Reverse Mecanism Position Switch

1. Remove switch connectors.

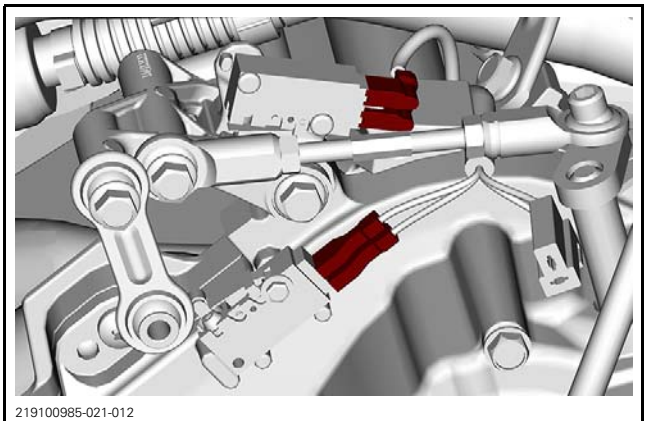
219100985-021-012

2. Remove switch fasteners.

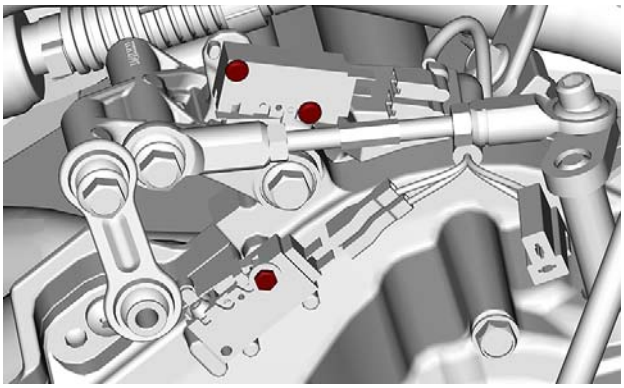
219100985-021-013

## CHAINCASE

### Removing the Chaincase Cover

*Models with ACS*

1. Disconnect compressor connector.
2. Remove ACS compressor module support screws.

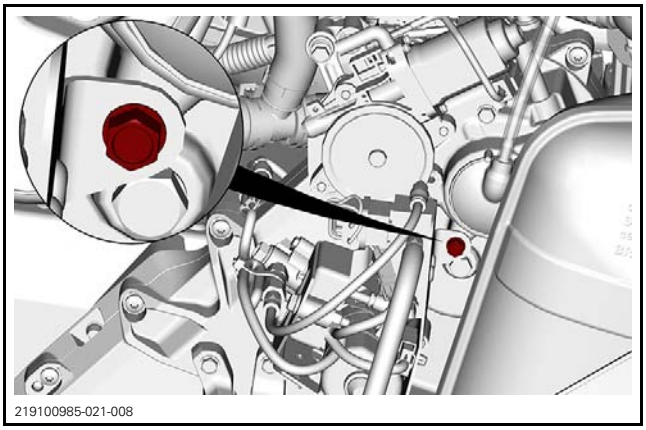
219100985-021-008

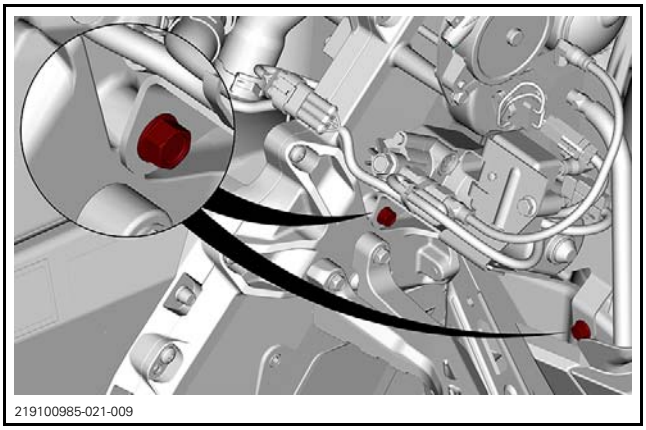
219100985-021-009

3. Move the ACS assembly aside.

*Models with Mechanical Reverse*

4. Remove the lower reverse handle link screw.

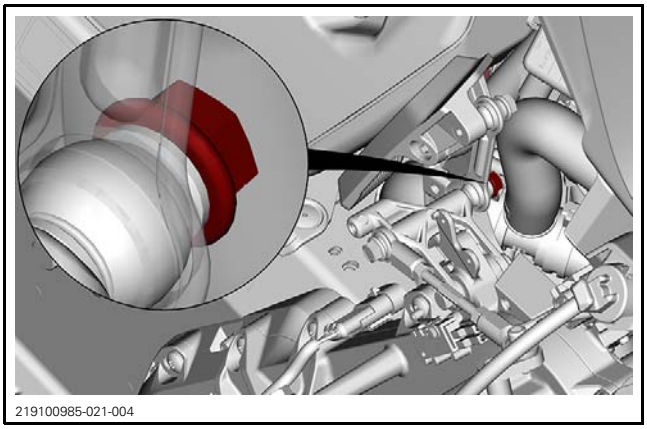
219100985-021-004

5. Disconnect the RVPS.

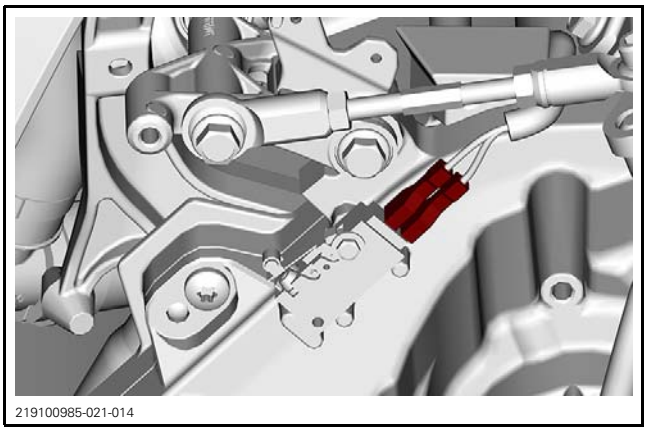
219100985-021-014

*Models with Electro-Mechanical Reverse*

1. Remove actuator. Refer to *REMOVING THE ACTUATOR* in this subsection.
2. Disconnect the RVPS.

*All Models*

1. Apply parking brake.
2. Remove muffler. Refer to *EXHAUST SYSTEM* subsection.
3. Drain the chaincase oil. Refer to procedure in this subsection.
4. Disconnect speed sensor connector.

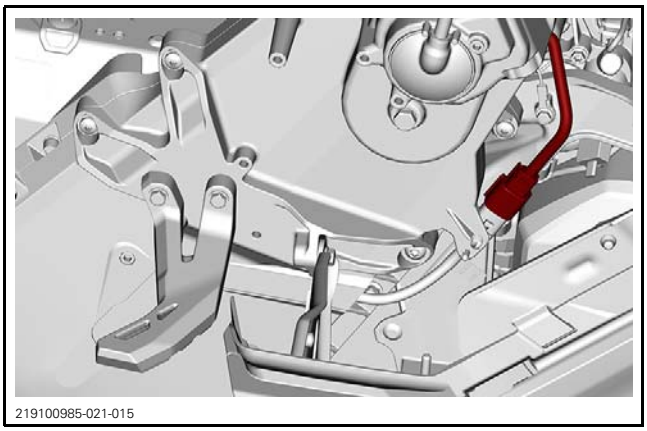
219100985-021-015

5. Remove reverse gear retaining screw.

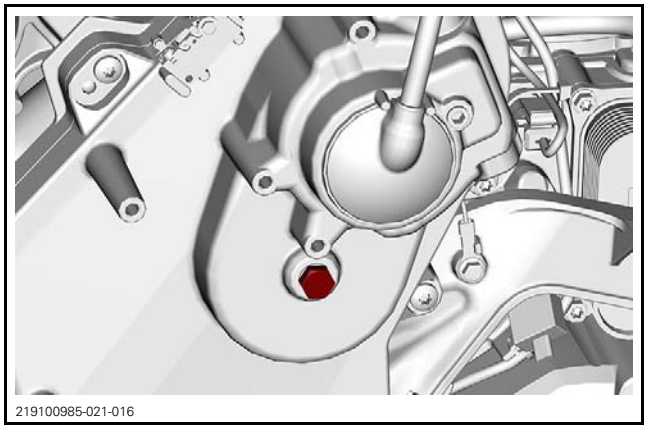
219100985-021-016

6. Remove lower retaining screw from shifter link rod.

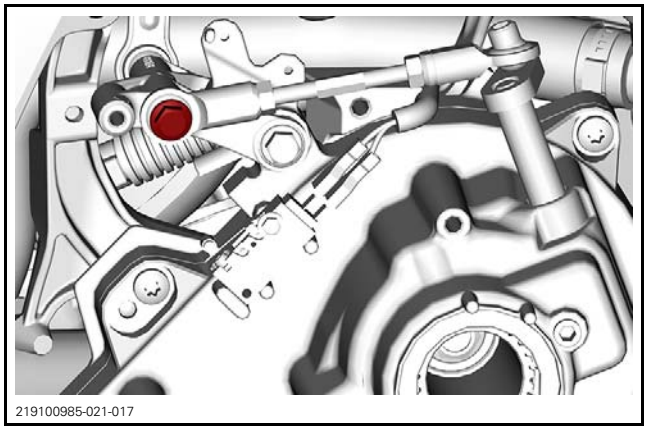
219100985-021-017

7. Remove the RH side toe hook and the screw securing the cover to the footrest.

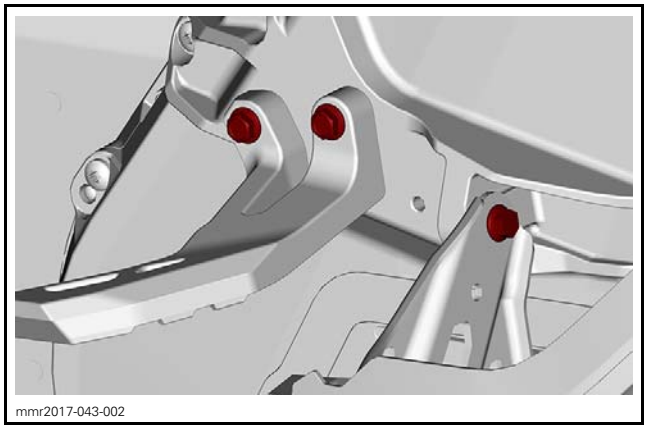
mmr2017-043-002

8. Unscrew and remove chaincase cover screws.

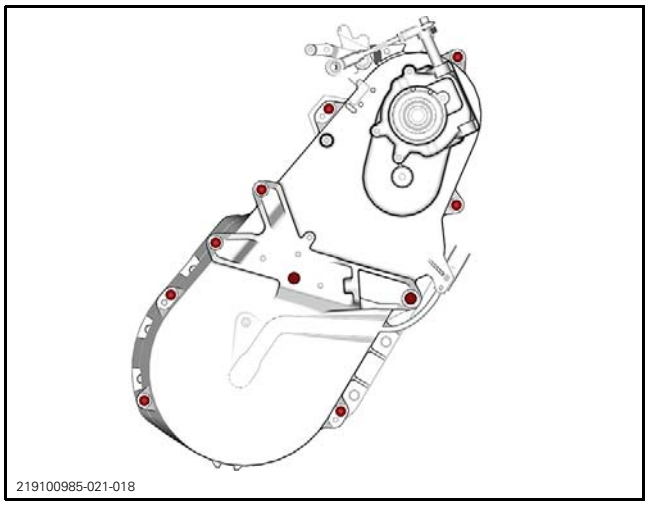
219100985-021-018

9. Pull the bottom of chaincase cover to drain oil.

## Chaincase Disassembly

1. Apply parking brake.
2. Remove chaincase cover. Refer to *REMOVING THE CHAINCASE COVER* in this subsection.

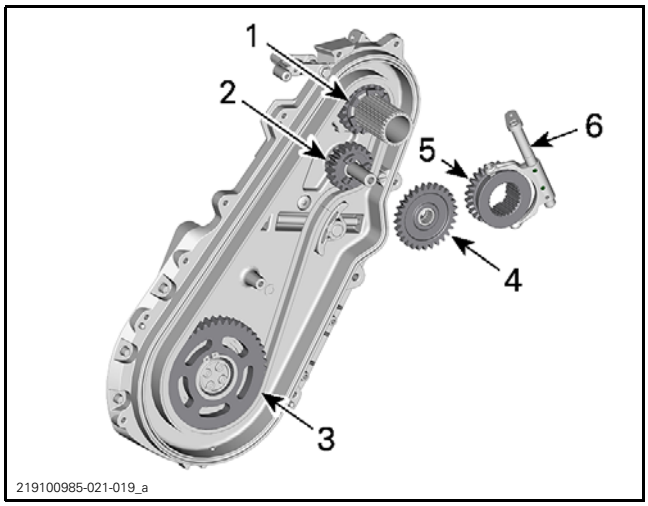

219100985-021-019_a

*1. Upper sprocket*
*2. Reverse sprocket*
*3. Lower sprocket*
*4. Reverse gear*
*5. Sliding gear*
*6. Shift fork*

### Shift Fork (in Chaincase Cover)

1. Remove spring pins using a punch as shown.

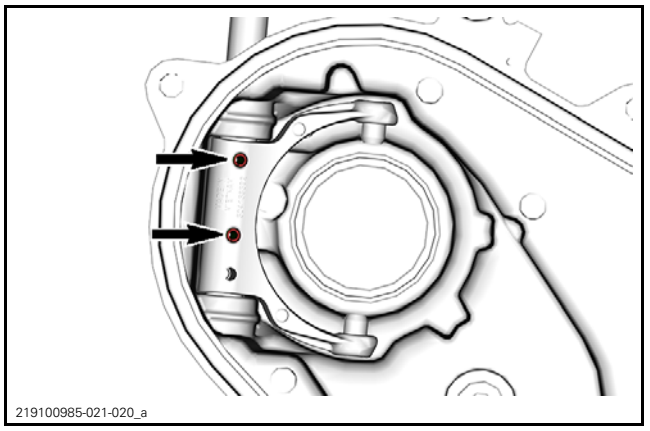
219100985-021-020_a

2. Pull out shift rod from chaincase cover.
3. Remove shift fork.

### Gears and Sprockets

Do not remove tension on drive chain for the moment.

1. Remove upper screw that hold sliding gear assembly.

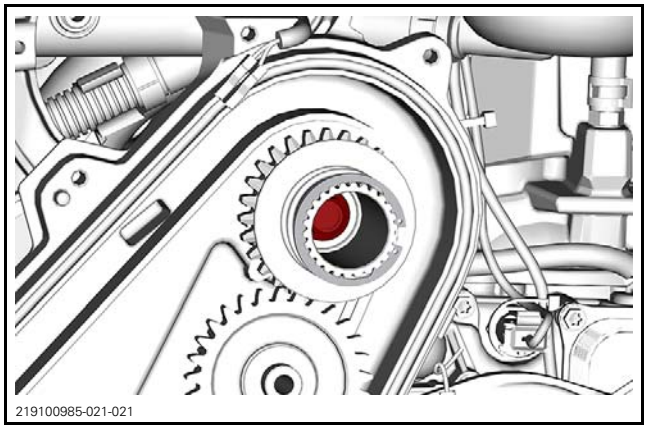
219100985-021-021

2. Remove chain tensioner from chaincase.
3. Remove sliding gear assembly, reverse sprocket and reverse gear simultaneously.

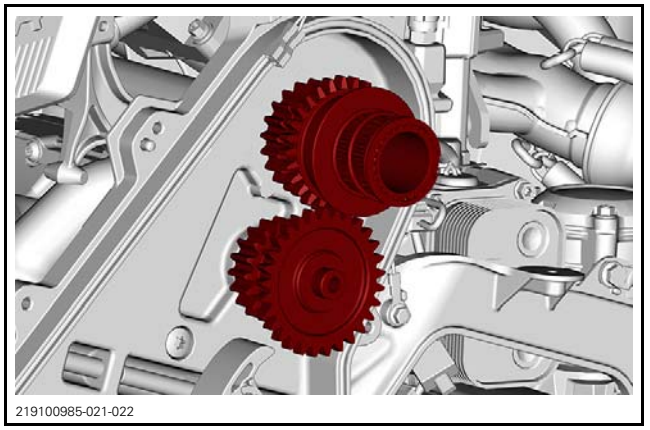
219100985-021-022

### Sliding Gear Disassembly

**NOTICE** Do not use the press to compress the sliding gear while disassembling. Use the press ONLY as a guide to ensure that the spring tension will be released safely.

1. Install sliding gear assembly on a press.
2. Position a 25 mm (1 in) deep socket on the upper sprocket side.
3. Adjust press rod on the socket, do not apply pressure on the assembly.

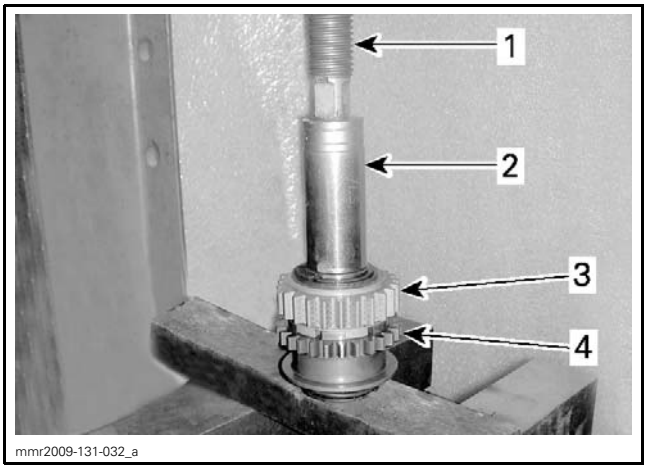

mmr2009-131-032_a

1. *Press rod*
2. *Deep socket (25 mm (1 in))*
3. *Upper sprocket*
4. *Sliding gear*

4. Firmly retain upper sprocket with one hand.
5. Remove circlip from coupling shaft.

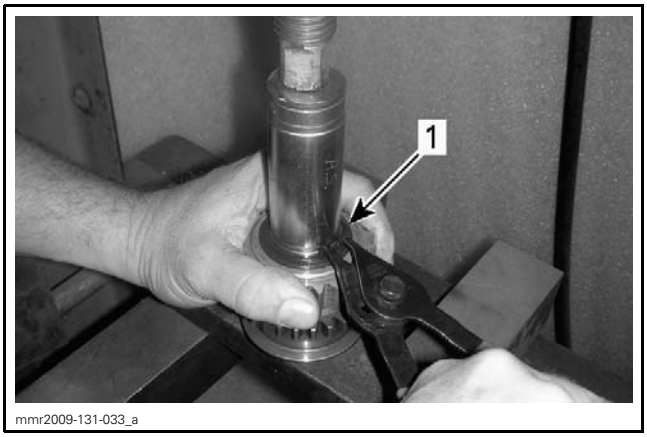

mmr2009-131-033_a

1. *Circlip*

6. Carefully release spring tension.

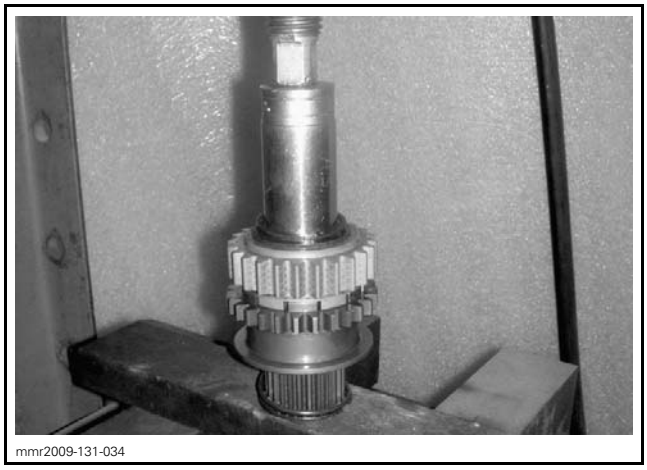
mmr2009-131-034

7. Remove upper sprocket and sliding gear from press.

### Chain and Lower Sprocket

1. Remove the lower sprocket circlip.

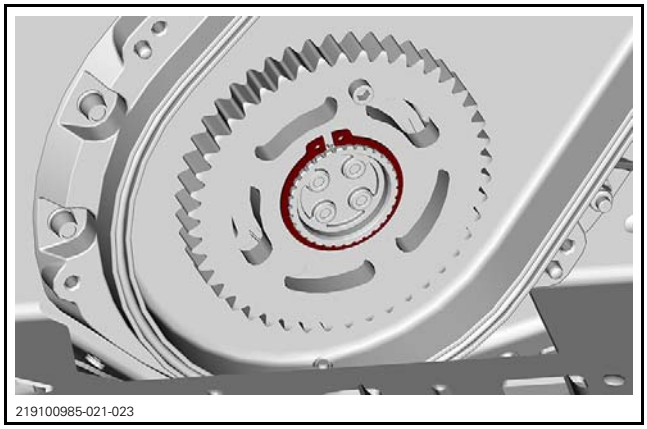
219100985-021-023

2. Remove lower sprocket and drive chain simultaneously.

### Chain Tensioner

1. Remove the hair pin from behind the chaincase.

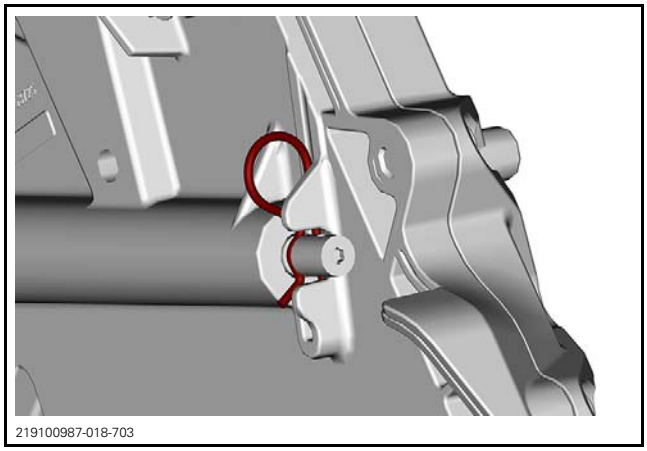
219100987-018-703

2. Remove the tensioner adjustment screw.

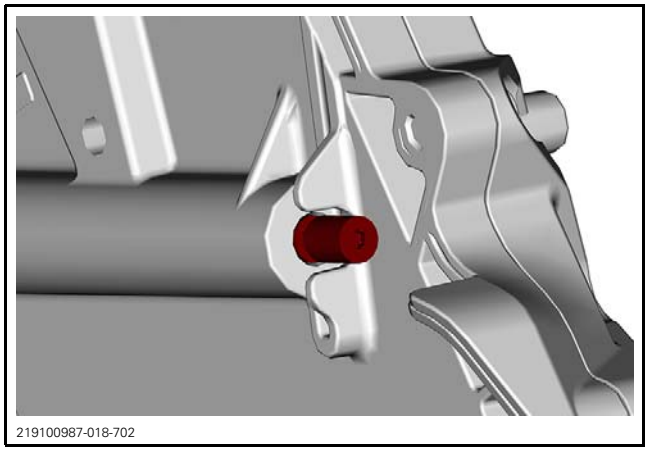
219100987-018-702

3. Remove tensioner.

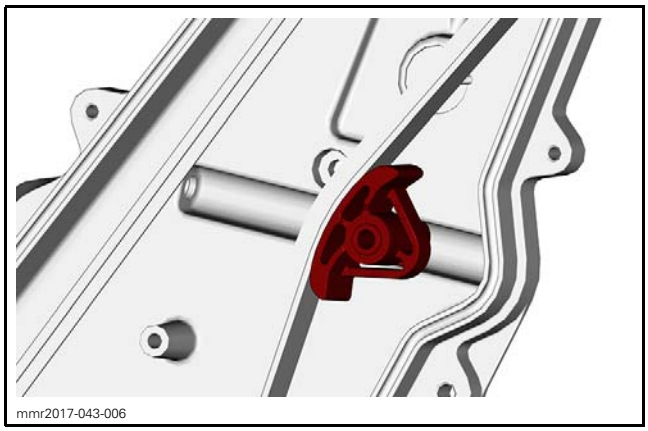
mmr2017-043-006

NOTE: The following steps are required only if the tensioner or the slider is defective.

4. Remove the circlip securing the slider to tensioner.

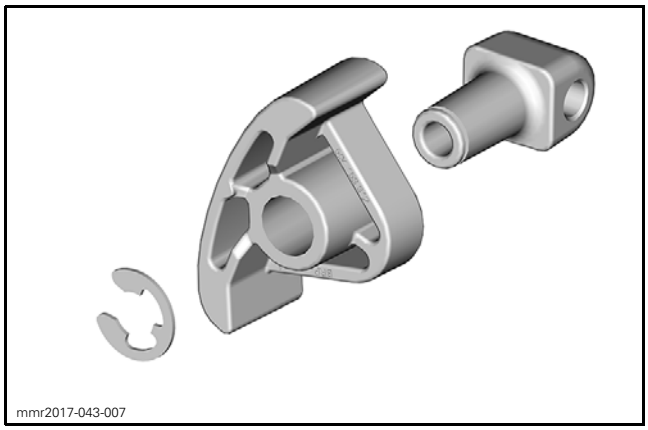
mmr2017-043-007

1. *Circlip*
2. *Tensioner*
3. *Slider*

## Chaincase Bearings

NOTE: This procedure can be applied either for the countershaft bearing or the drive shaft bearing.

1. Remove the countershaft or the drive axle, depending which bearing is replaced. Refer to *DRIVE SYSTEM AND BRAKE* section.
2. Remove the snap ring securing bearing into chaincase.

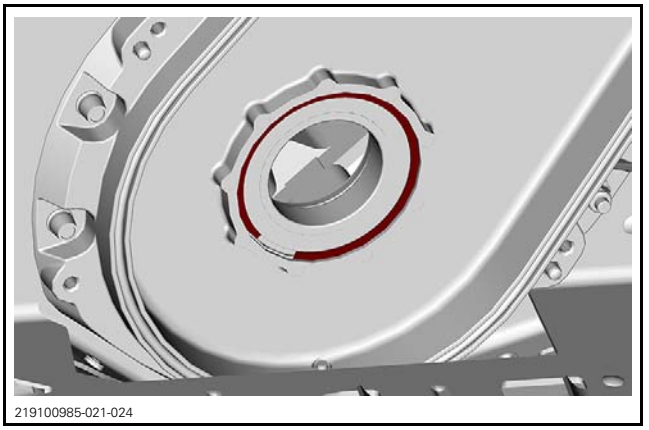
219100985-021-024

3. Install the appropriate bearing extractor:

| REQUIRED TOOL | |
|---|---|
| Countershaft bearing | |
| BEARING PULLER/PUSHER (P/N 529 036 111) |  |
| Drive axle bearing | |
| BEARING PULLER/PUSHER (P/N 529 036 112) |  |

4. Install the extractor/installer tool behind the bearing.

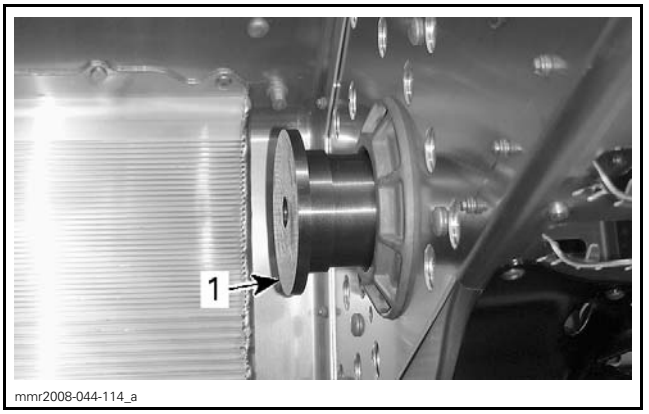

mmr2008-044-114_a

1. *Extractor/installer tool*

5. Install the extractor cup over bearing.

6. Tighten the extractor/installer tool screw to remove the bearing.

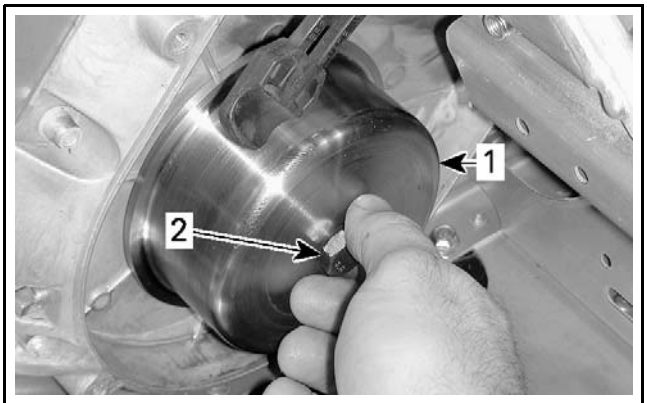

mmr2008-044-115_a

*1. Extractor cup*
*2. Tighten to remove bearing*

7. Using a seal puller, remove and discard the oil seal.


mmr2008-044-116

## Removing the Chaincase

IMPORTANT:Ensure you have a new mounting plate on hand along with the 5 attachment nuts before removing the chaincase assembly. Refer to the appropriate *ELECTRONIC PARTS CATALOG* that fits your model to determine required part number.

1. Disassemble chaincase. Refer to *CHAINCASE DISASSEMBLY* in this subsection.
2. Remove drive axle and countershaft. Refer to *DRIVE SYSTEM AND BRAKE* section.
3. Remove the Huck rivets. Refer to *FRAME* subsection for proper removal procedure.

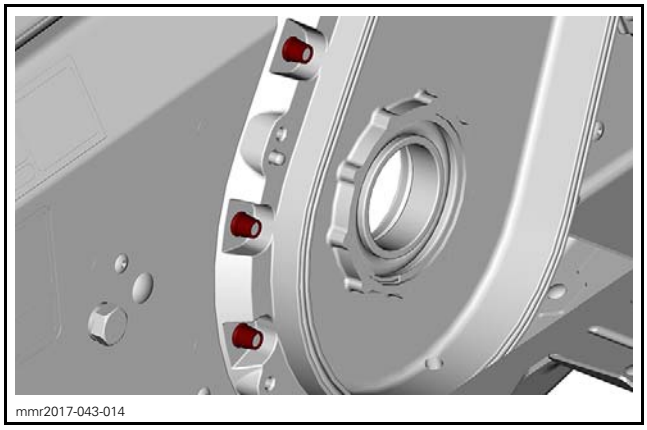
mmr2017-043-014

4. Remove nuts beside the footrest.

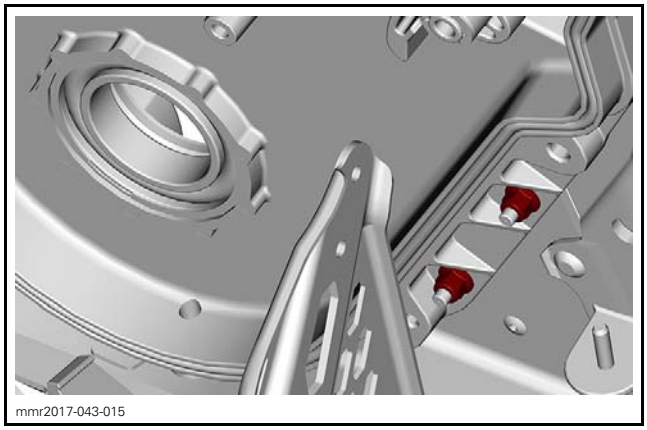
mmr2017-043-015

5. Remove the screw above the tensioner.

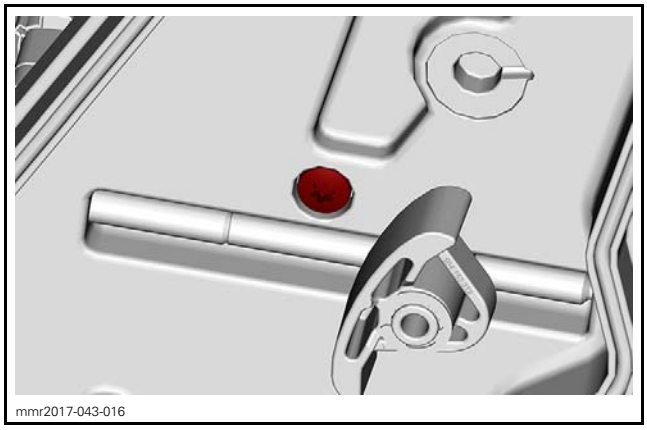
mmr2017-043-016

6. Remove bolts behind the top of chaincase.

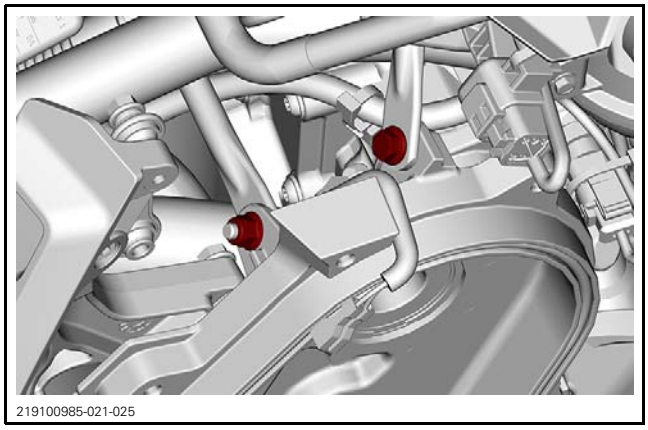


7. Using 2 large pry bars inserted between chaincase and frame, pry chaincase out of vehicle.

## Chaincase Inspection

### Chaincase Cover

Inspect cover for cracks or other damages, replace if necessary.

Inspect cover front and rear stopper for crack, replace if necessary.

Inspect O-ring inside cover is brittle, hard or damaged, replace if necessary.

### Shift Fork, Lever and Link Rod

Inspect shift fork for straightness, replace if necessary.

Inspect shift fork wear or other damages, replace if necessary.

Inspect shift lever for straightness and for rotation movement, replace if necessary.

Inspect link rod for straightness and other damages, replace if necessary.

### Spring

Measure spring free length, replace if out of specification.

| SPRING FREE LENGTH | |
|---|---|
| SERVICE LIMIT | 48 mm ± 1 mm (1.89 in ± .04 in) |

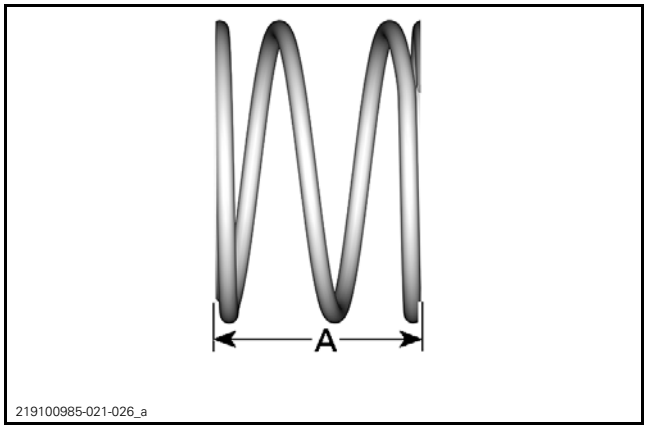


*A. Free length*

### Chain, Gears and Sprockets

Inspect the chain, gears and sprockets for:
- Wear
- Cracks
- Damages teeth
- Missing links.

If a problem is detected:
- Replace drive chain and sprockets as an assembly.
- Replace upper sprocket and sliding gear as an assembly.
- Replace reverse sprocket and reverse gear as an assembly.

Check the drive chain deflection.

If the deflection is greater than 38 mm (1-1/2 in) without the chain tensioner, replace the drive chain.

### Chain Tensioner

Check chain tensioner slider for wear or other damages. A longitudinal groove in the slider indicate a broken chain link. Replace if necessary.

Check threads of tensioner adjustment screw for damages or wear.

Check straightness of adjustment screw. Replace screw if necessary.Check chaincase for damages.

### Bearings

Inspect all bearings for smooth operation:
- If rough or excessive play is detected, replace bearing.

## Installing the Chaincase Housing

The installation is the reverse of the removal procedure. However, pay attention to the following.

Remove the clinch studs from the frame.

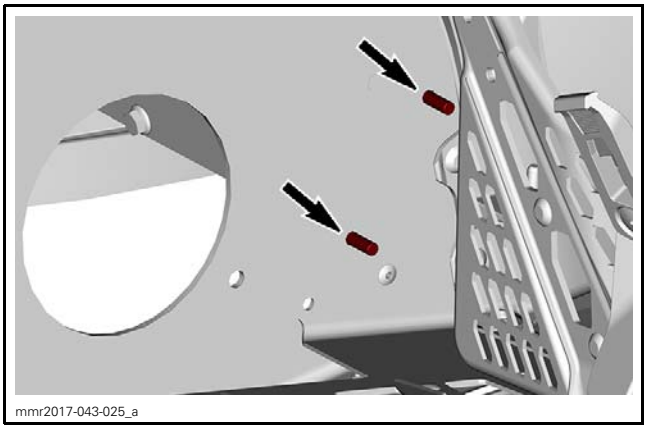
mmr2017-043-025_a

Use a suitable box to support the frame around the stud head and hit the stud from the outside with a hammer.

Install the new mounting plate underneath the frame.

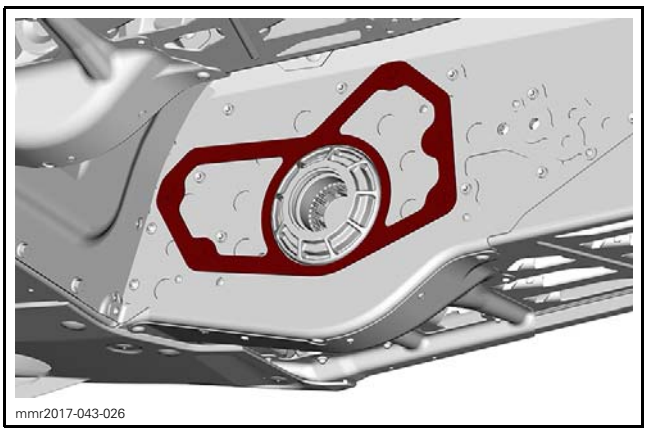
mmr2017-043-026

*UNDERNEATH FRAME*

Install 5 elastic flanged nuts to secure chaincase on mounting plate.

Tighten fasteners as per the following sequence.

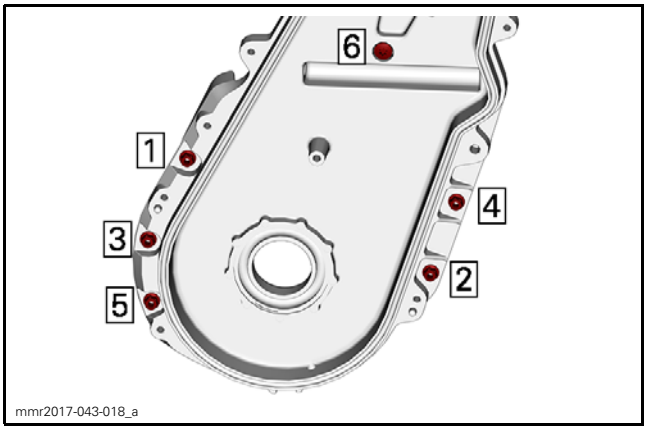

mmr2017-043-018_a

Proceed with drive chain adjustment. Refer to procedure in this subsection.

Refill chaincase with recommended oil. Refer to procedure in this subsection.

## Chaincase Assembly

### Chaincase Bearings

NOTE: This procedure can be applied either for the countershaft bearing or the drive shaft bearing.

1. Install the NEW oil seal on the extractor/installer tool. Position the lips toward bearing.

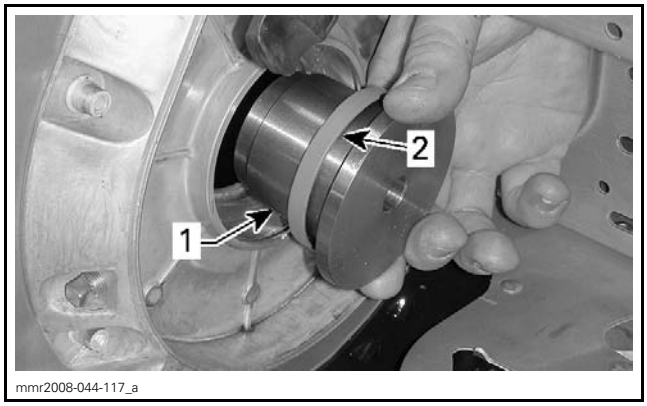

mmr2008-044-117_a

*1. Extractor/installer tool*
*2. Oil seal lips on this side*

2. Install extractor cup inside frame.

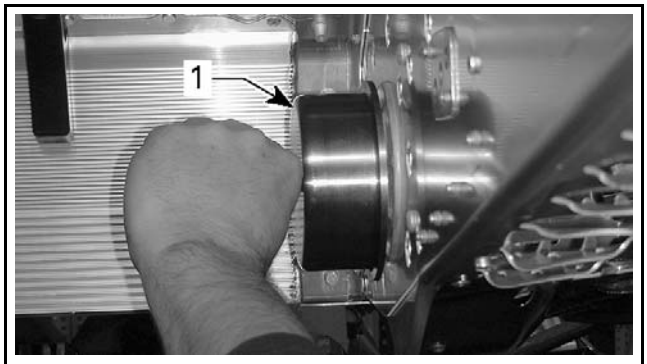

mmr2008-044-118_a

*1. Extractor cup*

3. Tighten extractor/installer tool screw to install the oil seal.
4. Install large washer and extractor/installer tool screw inside frame.

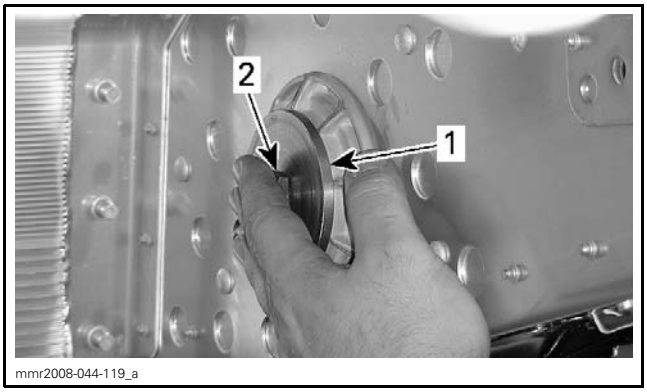


*1. Large washer*
*2. Extractor/installer tool screw*

5. In chaincase, install a NEW bearing and extractor/installer tool.

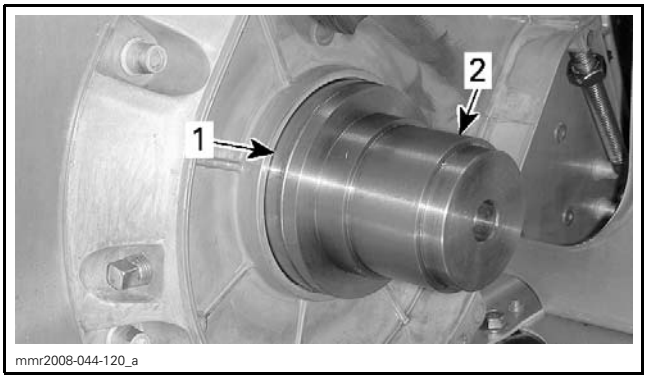


*1. Bearing*
*2. Extractor/installer tool*

6. Tighten extractor/installer tool screw to install the bearing.
7. Remove tool.

### Chain Tensioner

The installation procedure is the reverse of the removal.

### Chain and Lower Sprocket

The installation is the reverse of the removal procedure. However, pay attention to the following.

Install sprocket with its inscription outward.

### Sliding Gear

**NOTICE** **Do not use the press to compress the sliding gear while assembling. Use the press ONLY as a guide to ensure that the spring tension will be applied safely.**

The installation is the reverse of the removal procedure. However, pay attention to the following.

Install coupling shaft circlip on the splines side.

Install upper sprocket circlip on a press.

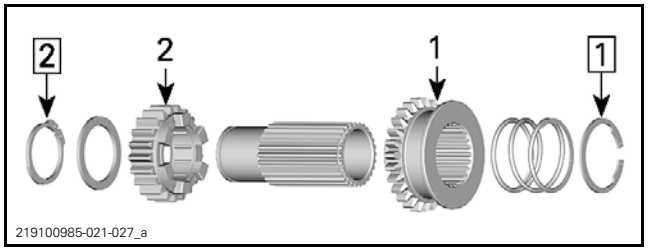


*Step 1: Install splines circlip*
*Step 2: Install upper sprocket circlip on a press*

*1. Sliding gear*
*2. Upper sprocket*

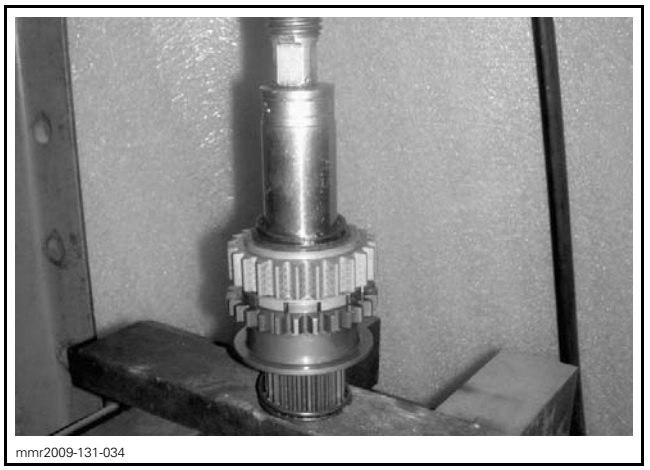


### Gears and Sprockets

The installation is the reverse of the removal procedure. However, pay attention to the following.

Assemble reverse sprocket and reverse gear as per the following illustration.

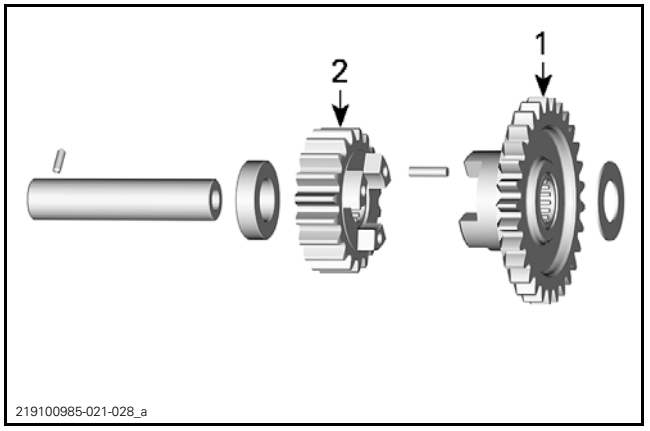


*1. Reverse sprocket*
*2. Reverse gear*

Install sliding gear assembly, reverse sprocket and reverse gear simultaneously.

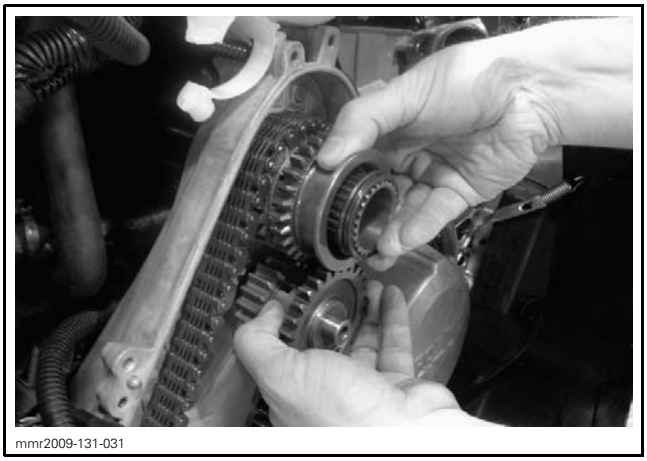
mmr2009-131-031

Install upper screw that hold sliding gear assembly. (do not tighten for the moment).

Adjust tension on the drive chain. Refer to *DRIVE CHAIN ADJUSTMENT* in this subsection.

Apply parking brake.

Tighten upper gear screw to specification.

| TIGHTENING TORQUE | |
|---|---|
| Upper gear screw | 48 N•m ± 6 N•m (35 lbf•ft ± 4 lbf•ft) |

### Shift Fork (in Chaincase Cover)

The installation is the reverse of the removal procedure However, pay attention to the following.

Ensure that seal is properly seated on the shift fork lever.

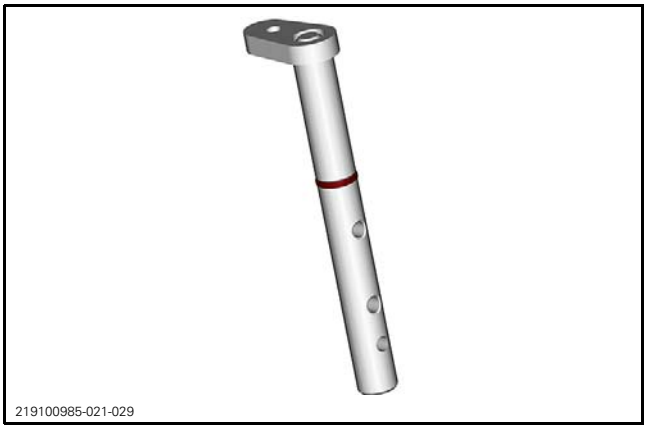
219100985-021-029

Position shift fork lever toward the inside.

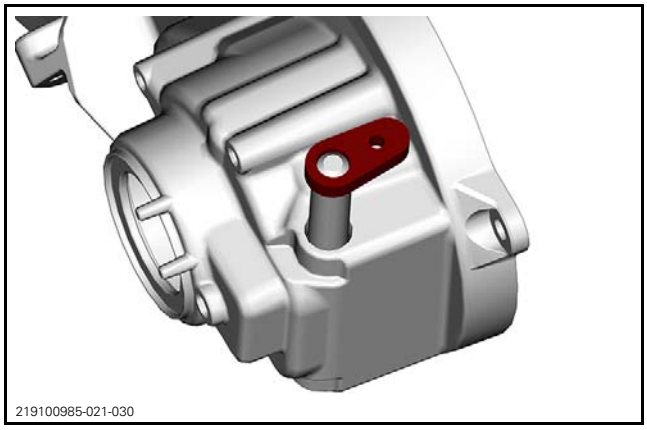
219100985-021-030

Install spring pins into both holes.

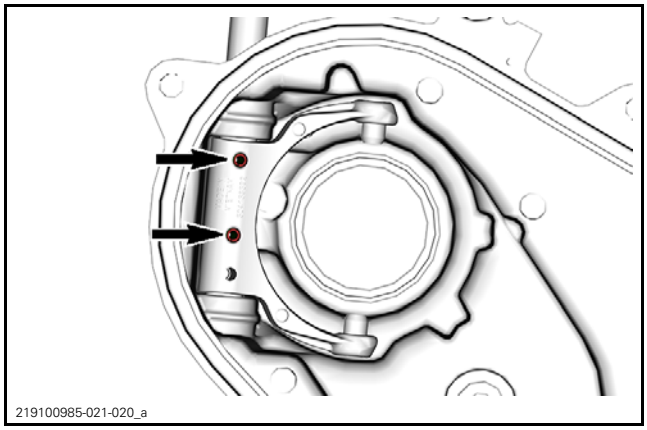
219100985-021-020_a

### Chaincase Cover

Install chaincase cover. Refer to *CHAINCASE COVER* in this subsection.

## Installing the Chaincase Cover

The installation is the reverse of the removal procedure However, pay attention to the following.

Ensure cover O-ring is positioned correctly in its groove.

Ensure that link rod is positioned with the reference mark upwards.

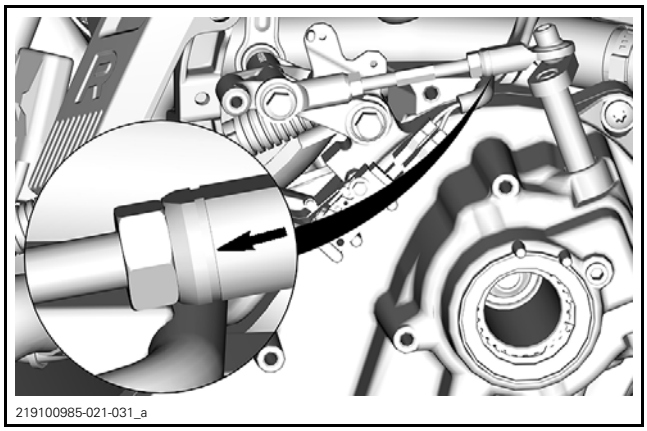
219100985-021-031_a

*Screw 11 is present on long chaincase only.*

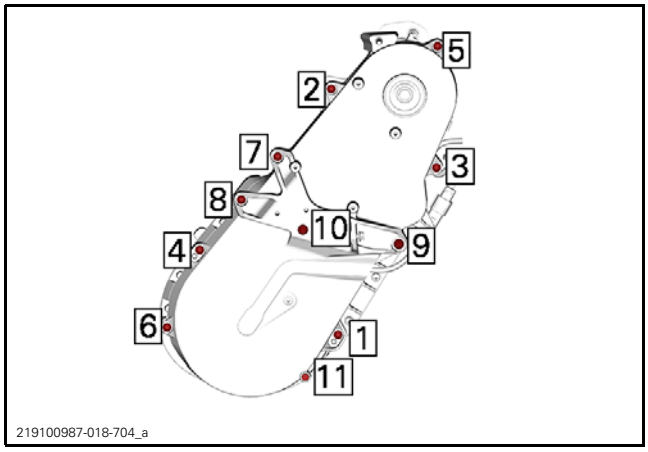


*TYPICAL*

| TIGHTENING TORQUE | | |
|---|---|---|
| Screws 1 to 8 and 11 (long chaincase) | Same chaincase | 10 N•m ± 2 N•m (89 lbf•**in** ± 18 lbf•**in**) |
| | New chaincase | 15 N•m ± 1 N•m (133 lbf•**in** ± 9 lbf•**in**) |
| Screw 9 | | 24.5 N•m ± 3.5 N•m (18 lbf•ft ± 3 lbf•ft) |
| Screw 10 | | 16 N•m ± 2 N•m (142 lbf•**in** ± 18 lbf•**in**) |
| Reverse gear screw | | 24.5 N•m ± 3.5 N•m (18 lbf•ft ± 3 lbf•ft) |

Adjust shift linkage, refer to *SHIFT LINKAGE (MECHANICAL AND ELECTRONIC REVERSE)* in this subsection.

Refill chaincase. Refer to *REPLACING THE CHAINCASE OIL* in this subsection.

## SPEED SENSOR (VSS)

The speed sensor is a hall effect sensor.

### Speed Sensor Location

The speed sensor is mounted in the chaincase cover.

### Testing the Speed Sensor Signal

1. Ensure speed sensor is properly connected.
2. Wake up ECM.
3. Back-probe VSS connector as per table and test for proper specification.

**NOTICE** **Be careful not to damage connector seals when back probing.**

| SPEED SENSOR (VSS) CONNECTOR | SPECIFICATION |
|---|---|
| Pin 2 | Ground |
| Pin 3 | 5 Vdc reference voltage |

If test failed, check wiring harness going to ECM.

4. Lift and support rear of vehicle.
5. Back-probe VSS connector as per table and test for proper specification.
6. Rotate track/driven pulley.

| SPEED SENSOR SIGNAL TEST | | | |
|---|---|---|---|
| ROTATE DRIVEN PULLEY | SPEED SENSOR CONNECTOR (SENSOR SIDE) | | VOLTAGE |
| | Pin 1 | Pin 2 | Alternate 7 Vdc and 0 Vdc |

If reference voltage and ground are available at sensor, but no signal, replace sensor.

NOTE: During chaincase disassembly, ensure magnets are intact on shaft.

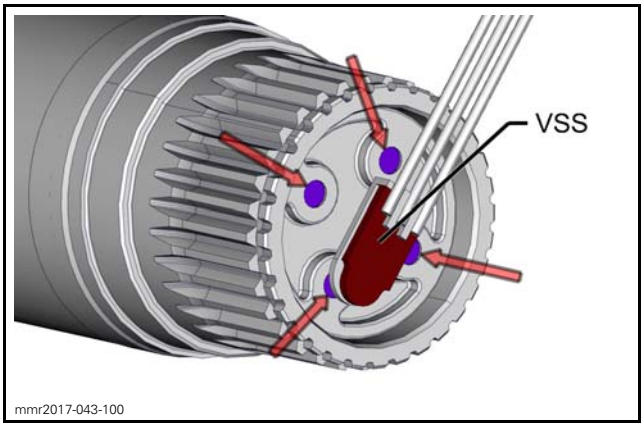


Measure the distance between magnetic cap and end of shaft. It must be as specified.

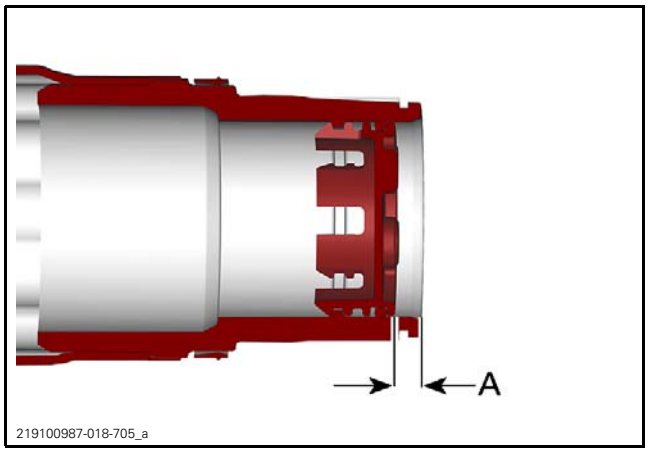


*A. Distance to measure*

| DISTANCE SPECIFICATION | |
|---|---|
| no. A Measured between magnetic cap and shaft end | 5 mm (.2 in) |

## Replacing the Speed Sensor

The sensor can be replaced with the chaincase cover as an assembly. In such a case, refer to *CHAINCASE* subsection.

To replace sensor only, proceed as follows.

### Removing the Speed Sensor

1. Remove chaincase cover. Refer to procedure in this subsection.
2. Heat the upper end of the speed sensor protective plate with a heat gun.

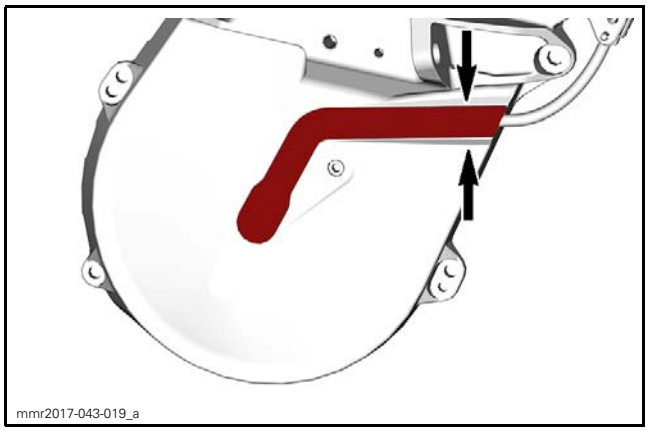


3. Use a flat screwdriver to pry out the end of the protective plate from chaincase cover.

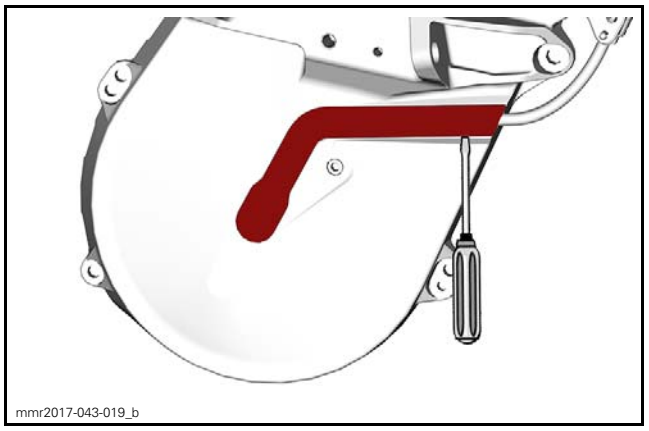


**NOTICE** Use care when prying out the plate not to damage the chaincase cover.

4. Heat the next section of the plate.
5. Pry out the heated section using the flat screwdriver.
6. Repeat steps 4 and 5 until the protective plate is completely removed.
7. Remove the speed sensor.
8. Use the flat screwdriver to remove the remaining sealant from the chaincase cover.

**NOTICE** Do not apply excessive pressure when removing the remaining sealant not to damage the chaincase cover.

9. Rub the sealant using a scouring pad.

### Installing the Speed Sensor

Make sure surface is clean and free of grease.

The assembly must be watertight.

| PRODUCT REQUIRED |
|---|
| LOCTITE 5900 (P/N 293 800 066) |

1. Apply 3 beads of sealant in the chaincase cover as per the following illustration.

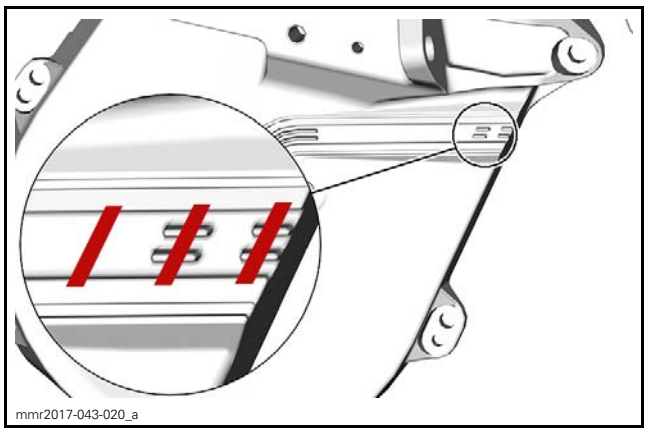

2. Install the speed sensor in the chaincase cover.

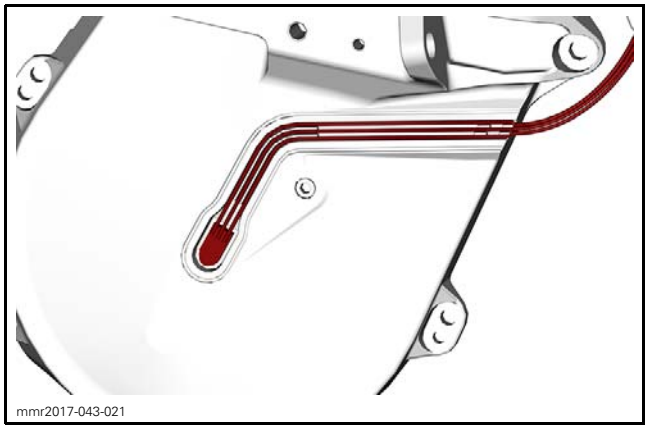
mmr2017-043-021

3. Apply sealant all around the protective plate bed on the chaincase cover.

Follow the pattern shown on the next picture.

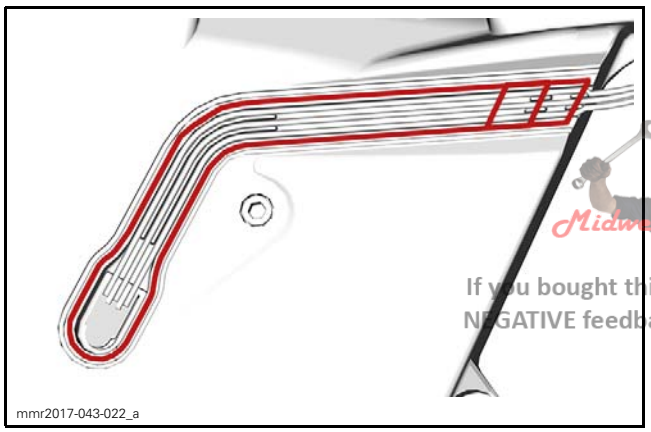
mmr2017-043-022_a

4. Place the protective plate in position and firmly push in order to evacuate all the surplus sealant. Keep pressure for at least 1 minute.
5. Wipe off all the sealant surplus.
6. Once cleaned up, inspect all the circumference for sealant lacks.

NOTE: Sealant must be visible all around.

7. Place some adhesive tape on the protective plate to maintain a pressure for at least 24 hours.

NOTE: Wait for at least 1 hour before exposing vehicle to cold temperature.

8. Reinstall chaincase cover. Refer to procedure in this subsection.

Midwest Manuals
Green Manuals
Paperless Manuals
For a Better Tomorrow
www.green-manuals.com
If you bought this manual from any other seller please leave them
NEGATIVE feedback and notify us at bestshopmanuals@gmail.com

# GEARBOX (HI/LO)

## SERVICE TOOLS

| Description | Part Number | Page |
|---|---|---|
| BEARING PULLER/PUSHER | 529 036 112 | 492 |
| ECM ADAPTER TOOL | 529 036 166 | 477 |
| FLUKE 115 MULTIMETER | 529 035 868 | 477 |
| UPPER OIL SEAL INSTALLER | 529 036 510 | 492 |

## SERVICE PRODUCTS

| Description | Part Number | Page |
|---|---|---|
| LOCTITE 5900 | 293 800 066 | 499 |
| SYNCHROMESH TRANSMISSION SYNTHETIC OIL (EUR) | 779211 | 478 |
| SYNCHROMESH TRANSMISSION SYNTHETIC OIL | 779170 | 478 |
| SYNTHETIC GREASE (EUR) | 779231 | 481, 497 |
| SYNTHETIC GREASE | 779162 | 481, 497 |

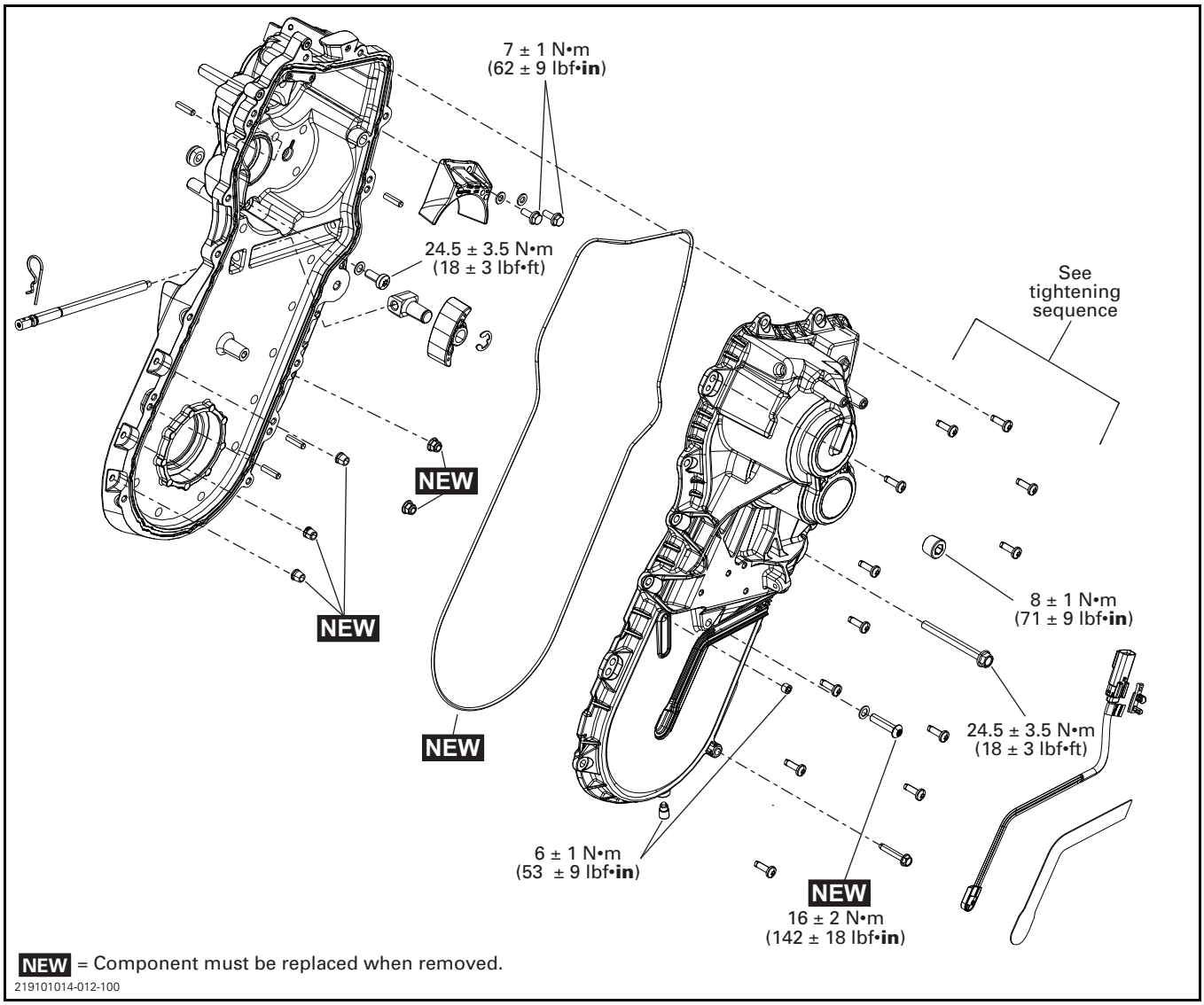


**NEW** = Component must be replaced when removed.

219101014-012-100

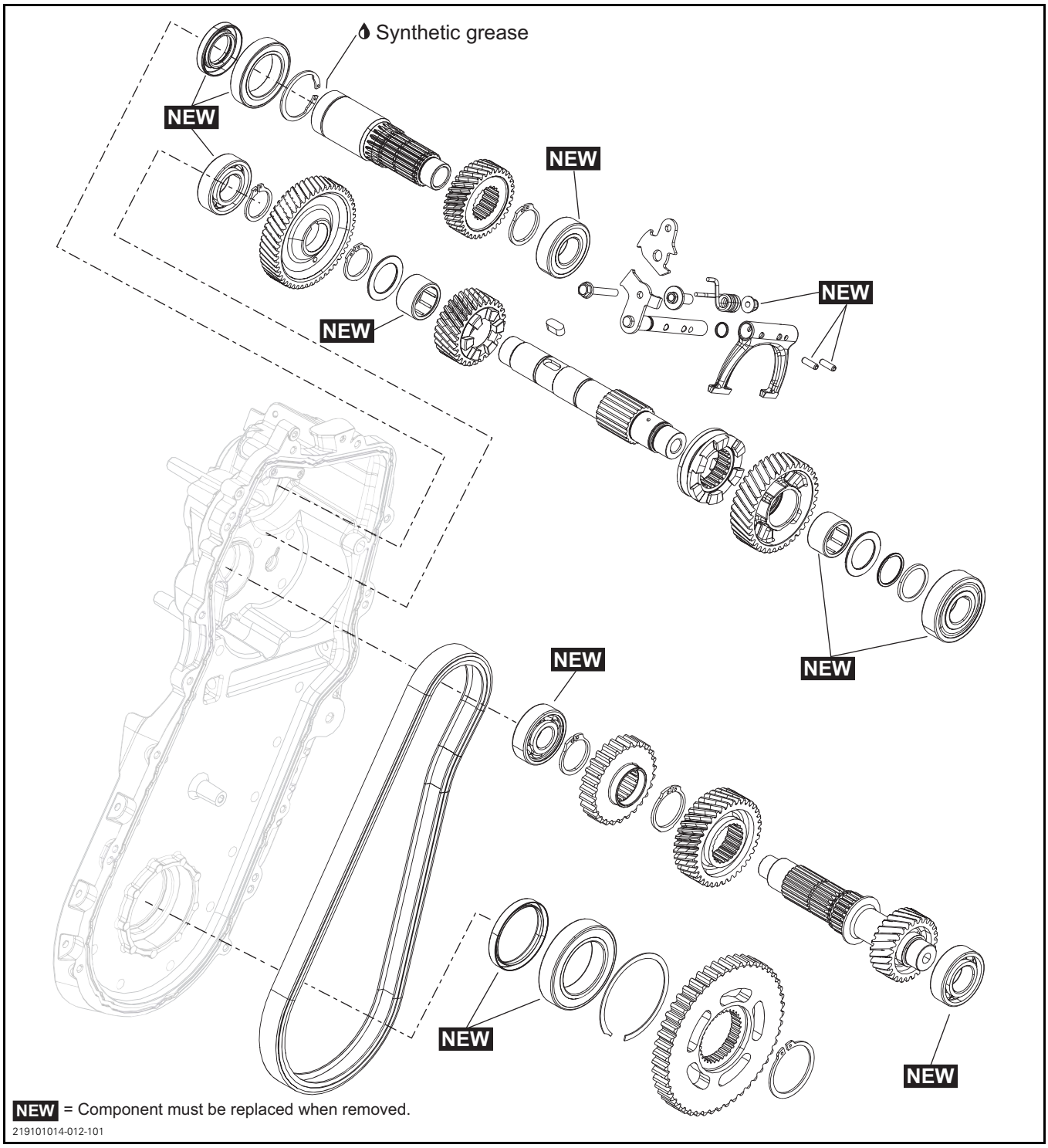
Synthetic grease
NEW
NEW
NEW
NEW
NEW
NEW
NEW
NEW
NEW = Component must be replaced when removed.
219101014-012-101

*Reverse Mechanism - ACE Engine*

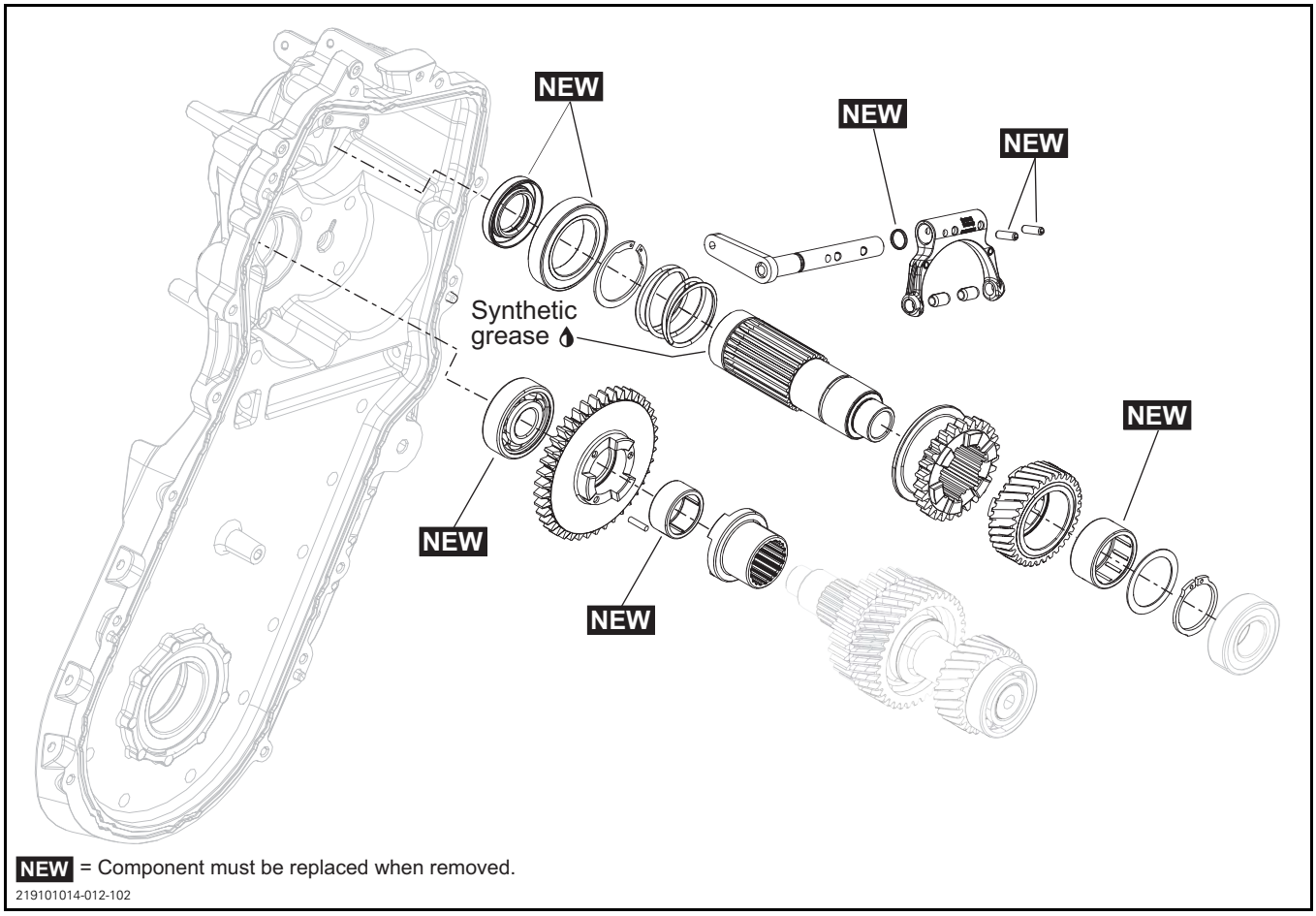


**NEW** = Component must be replaced when removed.

219101014-012-102

# GENERAL

The following tools are required to test most of the electrical parts.

| REQUIRED TOOLS | |
|---|---|
| FLUKE 115 MULTIMETER (P/N 529 035 868) |  |
| ECM ADAPTER TOOL (P/N 529 036 166) |  |

During assembly or installation, use the tightening torque values and service products as in the exploded view.

Clean threads before applying a threadlocker. Refer to *SELF-LOCKING FASTENERS* and *LOCTITE APPLICATION* at the beginning of this manual for complete procedure.

**⚠ WARNING**

**Torque wrench tightening specifications must be strictly adhered to.**
**Locking devices when removed (e.g.: locking tabs, elastic stop nuts, cotter pin, etc.) must be replaced with new ones.**

***NOTICE*** **Hoses, cables and locking ties removed during a procedure must be reinstalled as per factory standards.**

## SYSTEM DESCRIPTION

# ADJUSTMENT

## ADJUSTING THE SHIFTER LINK ROD

The link rod adjustment is required only when the shifter or reverse actuator is removed from gearbox. Periodic adjustment is not required.

*All Models*

1. Loosen link rod lock nuts.

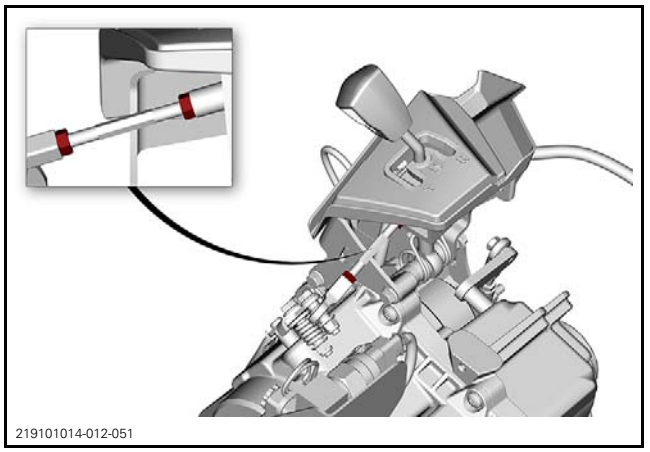


*SHIFTER LINK ROD*

2. Remove link rod screw and nut.

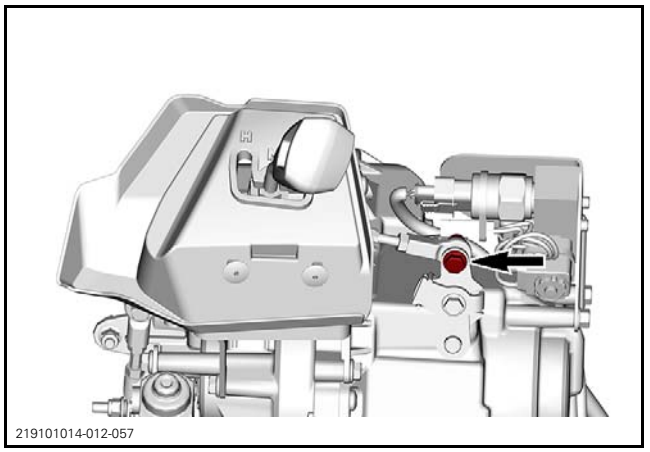


3. Manually put shift fork and shifter in LOW gear.

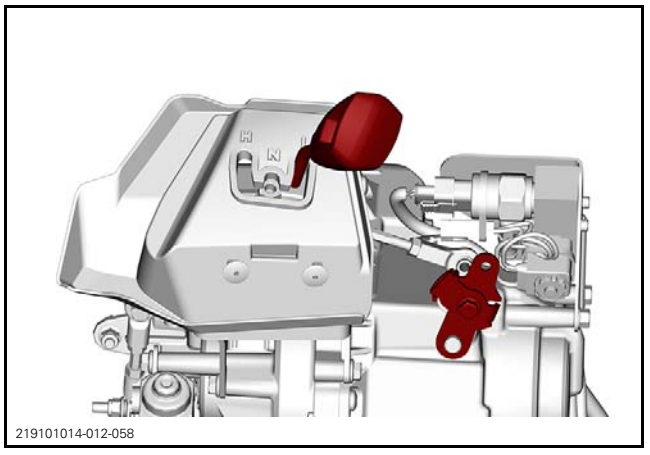


4. Turn driven pulley to ensure the gearbox is properly engaged.
5. Adjust link rod length until the holes line up and the screw can be inserted freely.

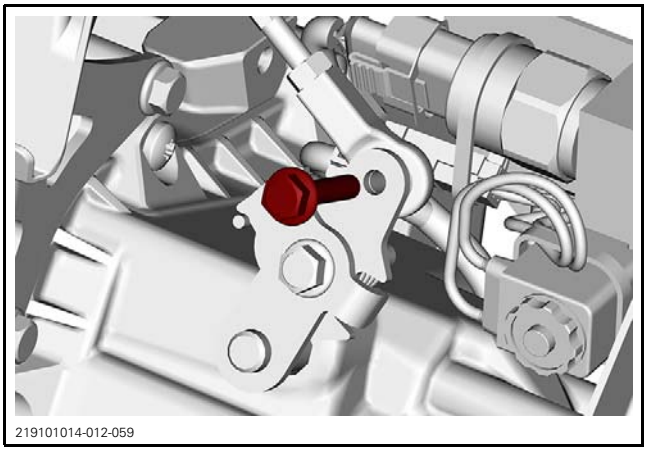


6. Tighten screw and lock nuts.

*Reverse Actuator - ACE Engine*

1. Loosen link rod lock nuts and shorten rod to the shortest length.

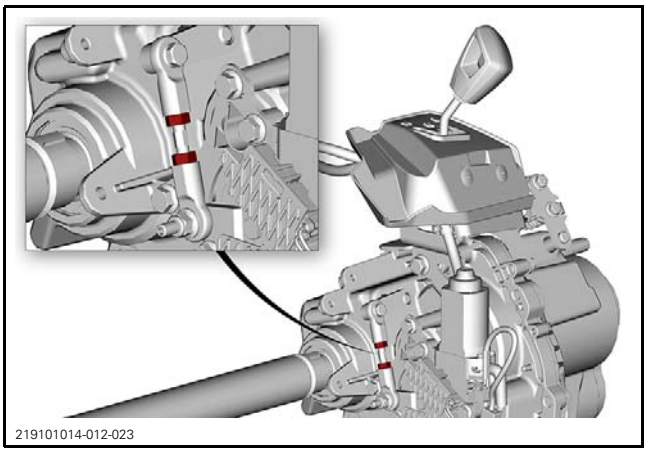


*4 STROKE REVERSE ACTUATOR LINK ROD*

2. Manually put shift fork in FORWARD gear.

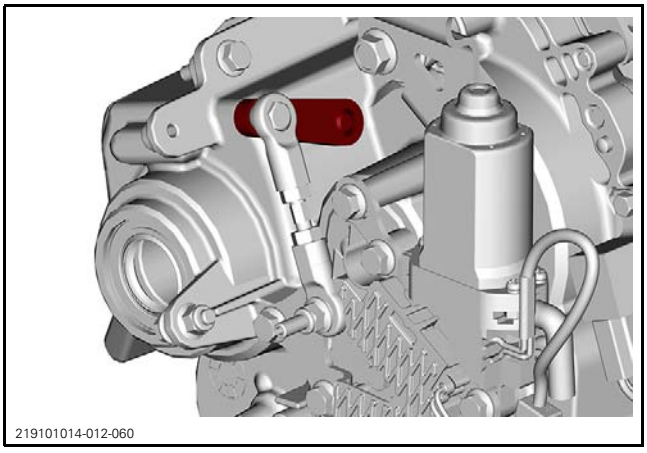


3. Rotate driven pulley a few turns to ensure reverse mechanism is properly engaged.
4. Adjust link rod **by hand** until a resistance is felt.

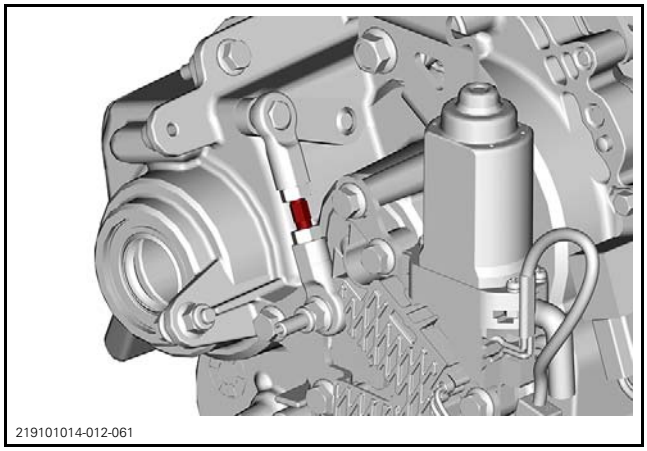


5. Tighten lock nuts.

# MAINTENANCE

## GEARBOX OIL

### Recommended Gearbox Oil

| RECOMMENDED SERVICE PRODUCT | |
|---|---|
| Scandinavia | SYNCHROMESH TRANSMISSION SYNTHETIC OIL (EUR) (P/N 779211) |
| All other countries | SYNCHROMESH TRANSMISSION SYNTHETIC OIL (P/N 779170) |

**NOTICE** If the recommended XPS gearbox oil is not available, use a 75W140 gear oil that meets the API GL-5 specification. The gearbox of this snowmobile has been developed and validated using the XPS™ Synthetic gearbox oil. BRP strongly recommends the use of its XPS Synthetic gearbox oil at all times. Damages caused by oil which is not suitable for the gearbox will not be covered by the BRP limited warranty.

### Verifying the Gearbox Oil Level

1. Place vehicle on a level surface, check the oil level by removing the check plug on the left side of gearbox.
2. Oil level must reach the threaded hole's lower edge.

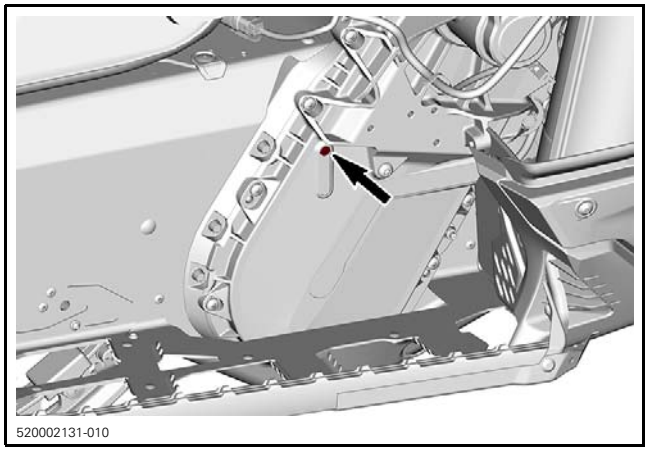


*CHECK PLUG*

3. To add oil, remove the filler plug.

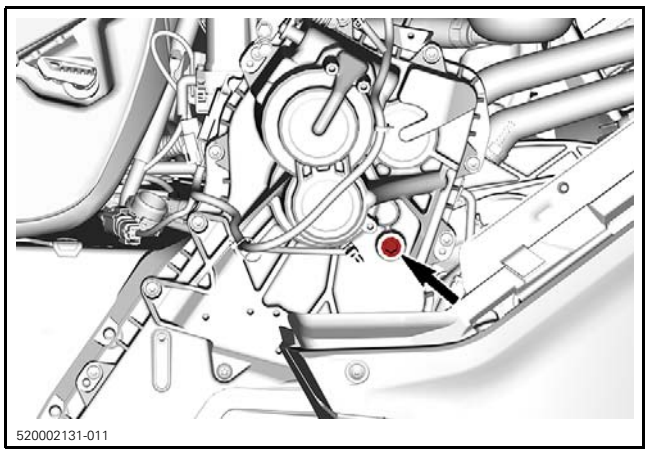


4. Pour recommended oil in gearbox by the filler hole until oil comes out by the check plug hole.
5. Reinstall check and filler plugs. Tighten to specification.

| TIGHTENING TORQUE | |
|---|---|
| Check plug | 6 N•m ± 1 N•m (53 lbf•**in** ± 9 lbf•**in**) |
| Filler plug | 8 N•m ± 1 N•m (71 lbf•**in** ± 9 lbf•**in**) |

## Replacing the Gearbox Oil

1. Place vehicle on a level surface.
2. Place a drain pan under gearbox drain plug area.
3. Remove the filler plug.
4. Remove the drain plug on the bottom of gearbox.

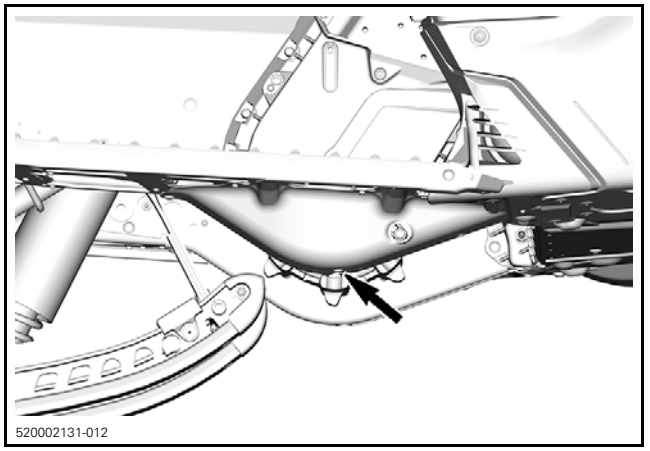


5. Let oil drain.
6. Reinstall the drain plug and tighten to specification.

| TIGHTENING TORQUE | |
|---|---|
| Drain plug | 6 N•m ± 1 N•m (53 lbf•**in** ± 9 lbf•**in**) |

7. Remove the check and filler plugs.
8. Pour approximately 900 ml (30 U.S. oz) of recommended oil in gearbox through the filler hole until oil comes out by the check plug hole.
9. Clean the check plug. Refer to *VERIFYING THE GEARBOX OIL LEVEL*, see procedure in this subsection.

# DRIVE CHAIN

## Adjusting the Drive Chain

Using the Torx end of the driven pulley expander, gently turn tensioner adjustment screw clockwise to eliminate the play.

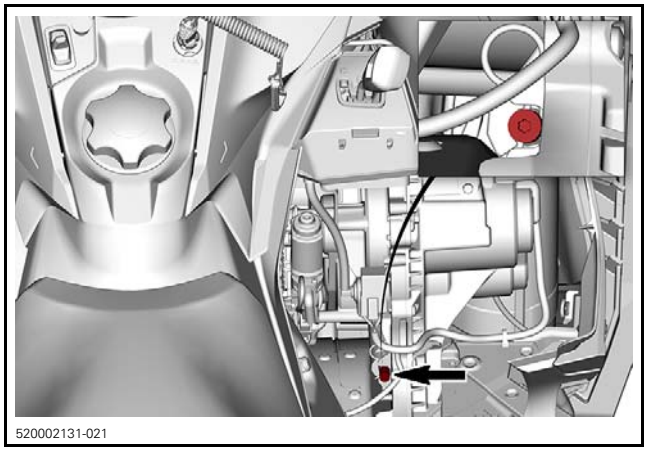


*ADJUSTMENT SCREW*

Do not force the tensioner in.

NOTE: Do not remove the cotter pin.

**NOTICE** Overtightening the drive chain could result in severe damage to the gearbox components.

# TROUBLESHOOTING

## DIAGNOSTIC TIPS (ELECTRO-MECHANICAL REVERSE - ACE ENGINE)

### BUDS2 Configuration

If the electro-mechanical reverse is not working, make sure the required option is selected in BUDS2. Otherwise, the electro-mechanical reverse will not work and no fault code will be set.

### Fault Code P0736

The fault code P0736 can appear for the following reasons:

– Reverse gears are not aligned to engage properly
– Failure of the reverse electrical components.

If fault code appears:

1. Clear the fault using BUDS2
2. Lift rear of vehicle and support it off the ground
3. Rotate driven pulley a few turns to move gears in chaincase
4. Retry changing gears.

If fault code appears again:

– Check drive belt height (refer to *DRIVE BELT* subsection)
– Check shift linkage adjustment. Refer to procedure in this subsection.

If fault code persist:

– Refer to *TESTING SEQUENCE* below.

## TESTING SEQUENCE (ELECTRO-MECHANICAL REVERSE - ACE ENGINE)

### Reverse Does Not Engage

First, make sure the following settings are as per specifications:

– Drive belt height
– Shift linkage adjustment.

If BUDS2 is properly configured, drive belt and shift linkage are properly adjusted, follow this testing sequence to diagnose problem:

1. Check reverse position switch (RVPS) continuity.
2. Check actuator fuse.
3. Check actuator connector.
4. Check relays continuity.
5. Check actuator operation.
6. Check input voltage to actuator.
7. Check input voltage to relays.
8. Check relay grounds.
9. Check relay ground signals.
10. Check ECM ground continuity.

Refer to the appropriate topic to see the complete testing procedures.

# PROCEDURES

## SHIFT LEVER

### Removing the Shift Lever

1. Remove the following screws.

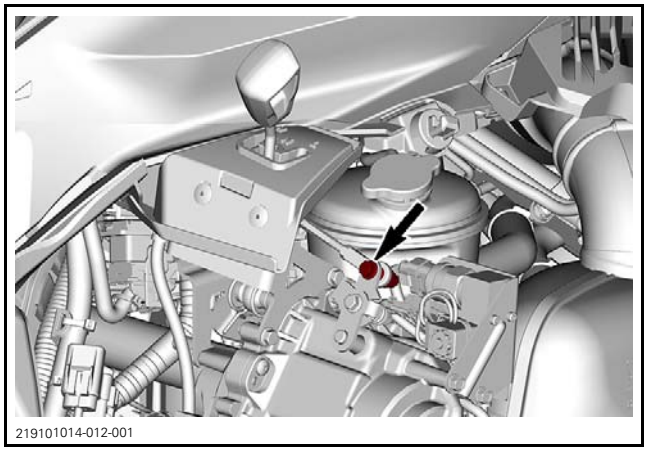
219101014-012-001

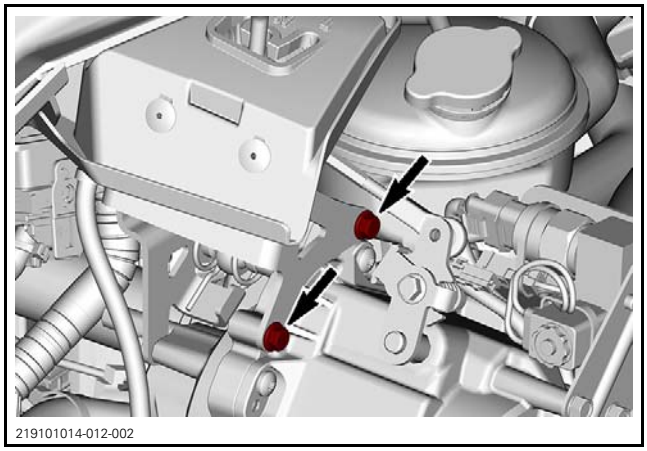
219101014-012-002

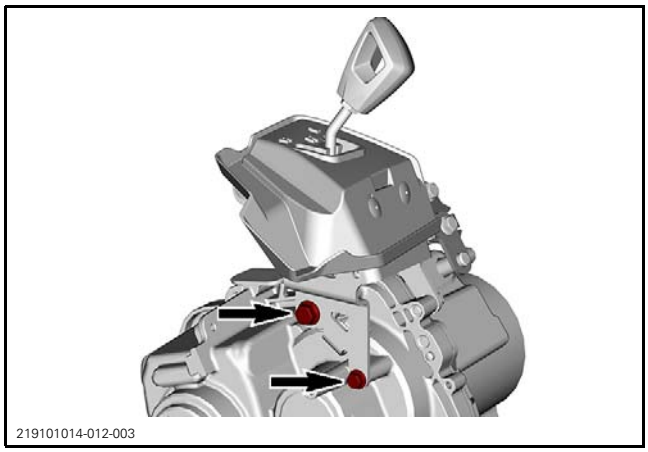
219101014-012-003

## Installing the Shift Lever

The installation is the reverse of the removal procedure. However, pay attention to the following.

Lubricate shift lever pivots and moving parts as shown.

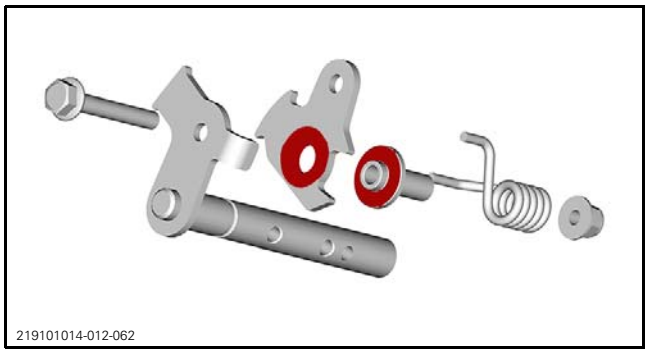
219101014-012-062

| SERVICE PRODUCT | |
|---|---|
| Scandinavia | SYNTHETIC GREASE (EUR) (P/N 779231) |
| All other countries | SYNTHETIC GREASE (P/N 779162) |

Tighten retaining screws to specification.

| TIGHTENING TORQUE | |
|---|---|
| Shift lever retaining screw | 10 N•m ± 2 N•m (89 lbf•**in** ± 18 lbf•**in**) |

# ELECTRO-MECHANICAL REVERSE - ACE ENGINE

## Removing the Actuator

**⚠ CAUTION** Battery BLACK (–) cable must always be disconnected first and connected last.

1. Disconnect BLACK negative cable from battery.
2. Disconnect actuator connector.

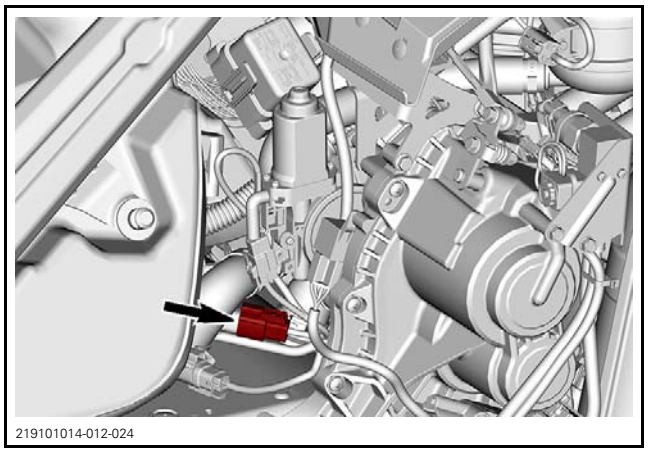
219101014-012-024

3. Remove actuator link nut.

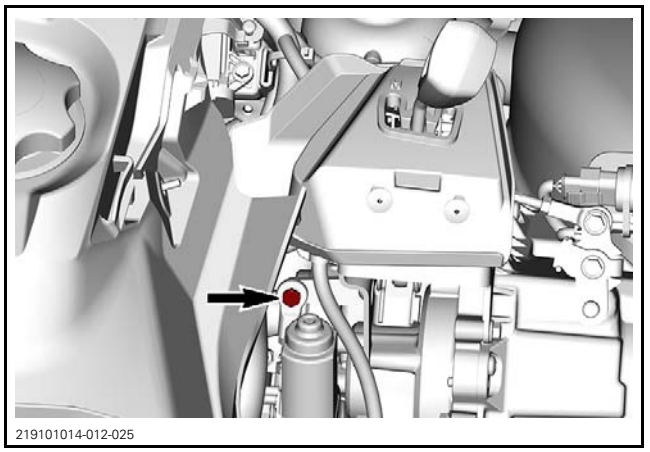
219101014-012-025

4. Remove actuator support screws.

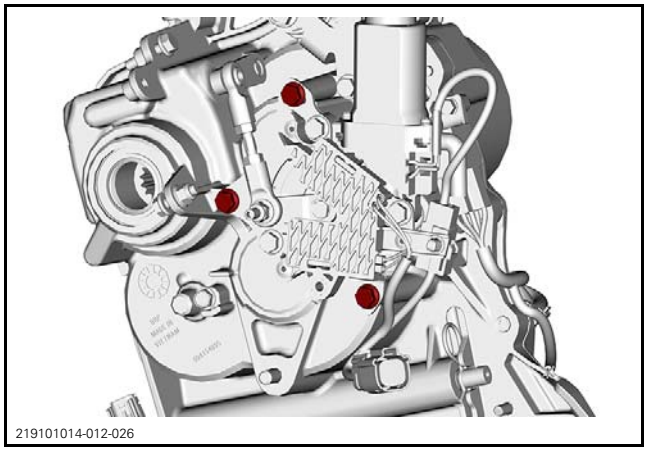
219101014-012-026

5. Remove the actuator from vehicle.

## Inspecting the Actuator

Inspect actuator connector for corrosion, clean if necessary.

Inspect RVPS switches for correct spring tension when pressed and released, replace if necessary.

Inspect actuator coupling shaft for straightness, replace if necessary.

Inspect actuator stopper in support for straightness.

## Installing the Actuator

The installation is the reverse of the removal procedure. However, pay attention to the following.

Lubricate shifter pivots and moving parts.

Tighten coupling shaft nut to specification.

| TIGHTENING TORQUE | |
|---|---|
| Actuator coupling shaft nut | 7 N•m ± 0.5 N•m (62 lbf•**in** ± 4 lbf•**in**) |
| Actuator support screws | 10 N•m ± 2 N•m (89 lbf•**in** ± 18 lbf•**in**) |

## Testing the Actuator Operation

**NOTICE** Do not power motor directly with the battery for a long period. Apply voltage quickly to ensure that the motor will not overheat at the end of its stroke.

1. Disconnect actuator connector.

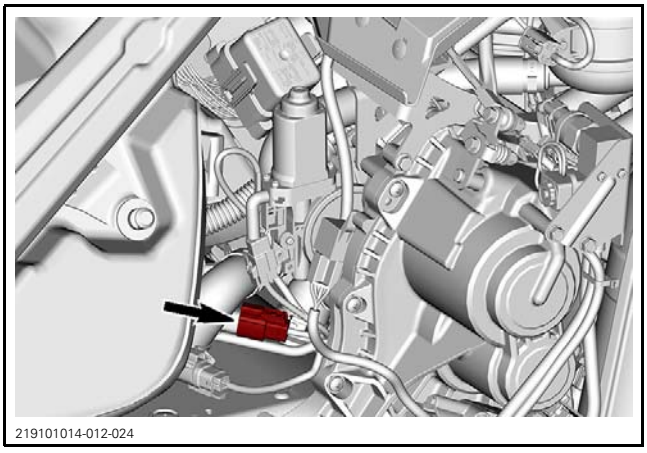

219101014-012-024

2. Remove actuator link nut.

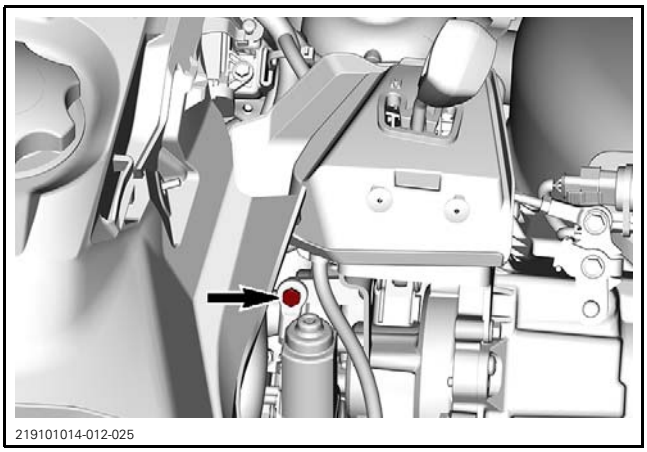

219101014-012-025

3. Connect actuator connector pin 2 to a 20 A suitable fused jumper and then directly to the positive battery post.
4. Connect actuator connector pin 1 directly to the negative battery post.

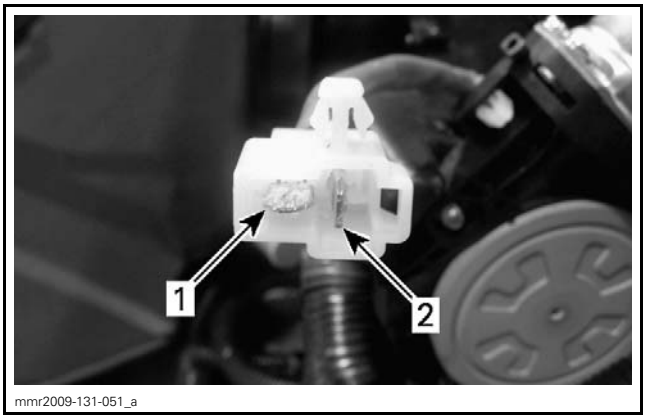


mmr2009-131-051_a

*1. Pin 1*
*2. Pin 2*

5. Verify if actuator works properly.
6. Invert battery polarities and verify if actuator works properly in the opposite direction.

## Testing the Actuator Input Voltage

1. Set the multimeter to Vdc.
2. Disconnect actuator connector.

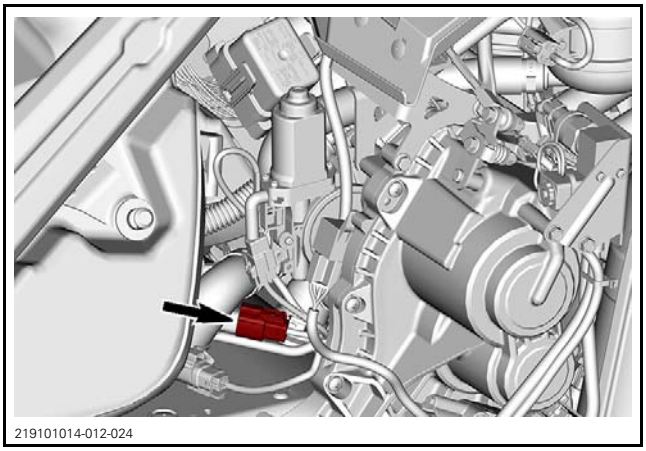

219101014-012-024

3. Start engine.
4. Press on START/RER button while engine is idling.
5. Measure voltage between harness connector terminals.

| ACTUATOR INPUT VOLTAGE TEST | | |
|---|---|---|
| ACTUATOR CONNECTOR PIN | | SPECIFICATION |
| 1 | 2 | Battery voltage (~12 Vdc) |

If measure is not as per specification, test:
– The battery voltage
– The actuator relay and fuse
– The actuator circuit continuity.

Refer to *WIRING DIAGRAM* for more information.

## Testing the Relay Continuity

1. Remove relays.
2. Set the multimeter to Ω.
3. Measure resistance as per the following table.

| RELAY CONTINUITY TEST | | |
|---|---|---|
| RELAY PIN | | SPECIFICATION |
| 87 | 30 | Open (OL) |
| 87a | | Close to 0 Ω |

4. Apply 12 volts on terminals 85 and 86.
5. Measure resistance again as per the following table.

| RELAY CONTINUITY TEST | | |
|---|---|---|
| RELAY PIN | | SPECIFICATION |
| 87 | 30 | Close to 0 Ω |
| 87a | | Open (OL) |

If results are not as per the above tables, replace relay.

## Testing the Relay Input Voltage (Forward and Reverse)

1. Set the multimeter to Vdc.
2. Start engine.
3. Measure voltage as per the following tables.

| RELAY INPUT VOLTAGE TEST | | |
|---|---|---|
| RELAY PIN | BATTERY POST | SPECIFICATION |
| 86 | Negative (-) | Battery voltage |
| 87 | | |

If voltage is not as specified, repair open circuit in wiring. Refer to *WIRING DIAGRAM*.

## Testing the Relay Ground (Forward and Reverse)

1. Set the multimeter to Vdc.
2. Start engine.
3. Measure voltage as per the following table.

| RELAY GROUND TEST | | |
|---|---|---|
| RELAY PIN | BATTERY POST | SPECIFICATION |
| 87a | Positive (+) | Battery voltage |

If voltage is not as specified, repair open circuit in wiring. Refer to *WIRING DIAGRAM*.

## Testing the Relay Ground Signal

### Forward Relay

For this test, electronic reverse must be set in reverse position.

NOTE: The measured voltage will be transmitted during a short period of time.

1. Set the multimeter to Vdc.
2. Start engine and let it run at idle.
3. Press on START/RER button while measuring voltage as per the following table.

| FORWARD RELAY TEST | | |
|---|---|---|
| RELAY PIN | BATTERY POST | SPECIFICATION |
| 85 | Positive (+) | Battery voltage |

If voltage is not as specified, repair open circuit in wiring. Refer to *WIRING DIAGRAM*.

### Reverse Relay

For this test, electronic reverse must be set in **forward** position.

NOTE: The measured voltage will be transmitted during a short period of time.

1. Set the multimeter to Vdc.
2. Start engine and let it run at idle.
3. Press on START/RER button while measuring voltage as per the following table.

| REVERSE RELAY TEST | | |
|---|---|---|
| RELAY PIN | BATTERY POST | SPECIFICATION |
| 85 | Positive (+) | Battery voltage |

If voltage is not as specified, repair open circuit in wiring. Refer to *WIRING DIAGRAM*.

## Testing the ECM Ground Continuity

### Forward Relay

1. Disconnect ECM-B connector.
2. Install connector on the ECM adapter tool.
3. Set the multimeter to Ω.
4. Measure resistance as per the following table.

| FORWARD RELAY TO ECM GROUND CONTINUITY TEST | | |
|---|---|---|
| RELAY PIN | ECM ADAPTER PIN | SPECIFICATION |
| 85 | B-L3 | Close to 0 Ω |

### Reverse Relay

1. Disconnect ECM-B connector.
2. Install connector on the ECM adapter tool.
3. Set the multimeter to Ω.
4. Measure resistance as per the following table.

| REVERSE RELAY TO ECM GROUND CONTINUITY TEST | | |
|---|---|---|
| RELAY PIN | ECM ADAPTER PIN | SPECIFICATION |
| 85 | B-F1 | Close to 0 Ω |

# REVERSE MECHANISM POSITION SWITCHES

## Testing the Switches Continuity

1. Disconnect Reverse Position Switch (RPS) and Forward Position Switch (FPS) connectors.

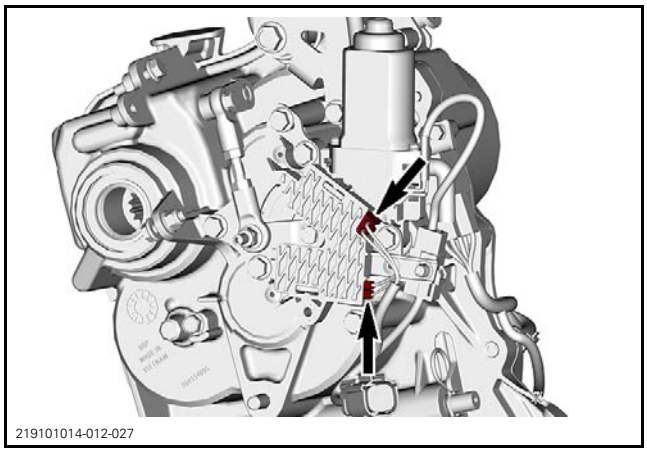


2. Set the multimeter to Ω.
3. Press RPS.
4. Measure resistance as per the following table.

| SWITCH CONTINUITY TEST | | |
|---|---|---|
| RPS PIN | | SPECIFICATION |
| 1 | 2 | Close to 0 Ω |

5. Release RPS.
6. Measure resistance again as per the following table.

| SWITCH CONTINUITY TEST | | |
|---|---|---|
| FPS PIN | | SPECIFICATION |
| 1 | 2 | Open (OL) |

If results are not as per the above tables, replace RPS.

Repeat the test for the FPS.

## Replacing the Reverse Mechanism Position Switches Assembly

1. Remove actuator support screws.

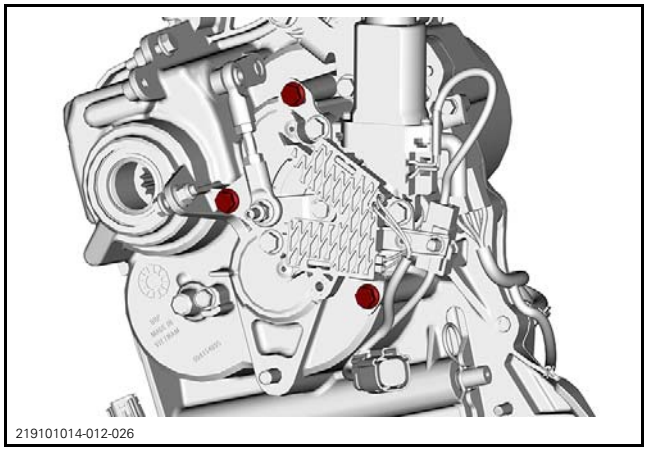


2. Remove switch connectors.

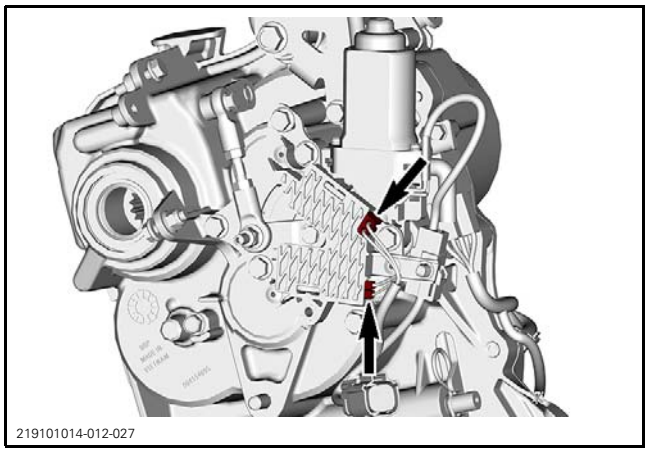
219101014-012-027

3. Remove link rod and switch fasteners.

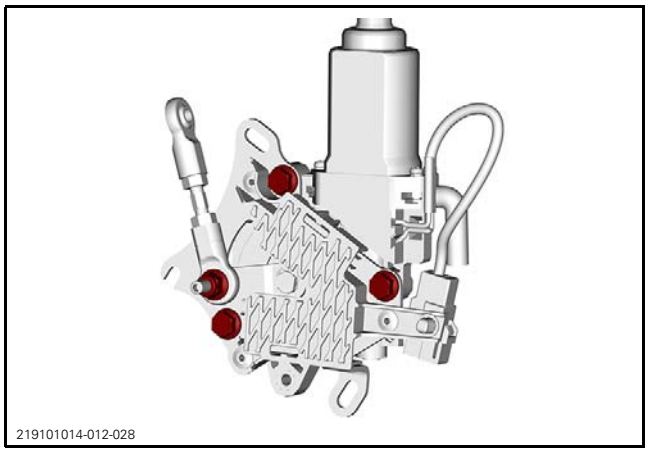
219101014-012-028

# GEARBOX

## Removing the Gearbox Cover

1. Apply parking brake.
2. Remove muffler. Refer to *EXHAUST SYSTEM* subsection.

### *Models with ACS*

3. Disconnect compressor connector.
4. Remove ACS compressor module and compressor support screws.

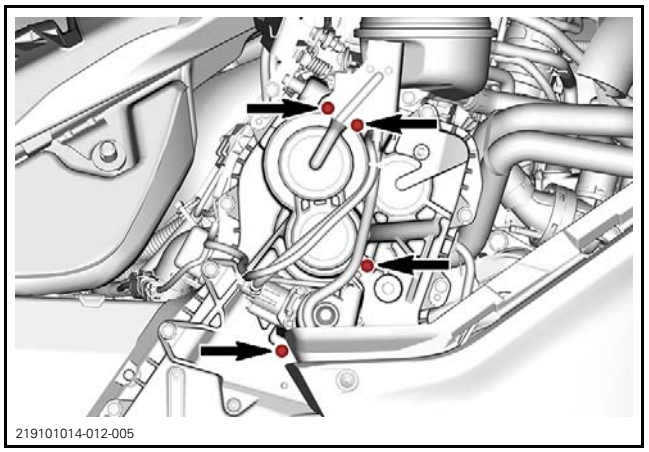
219101014-012-005

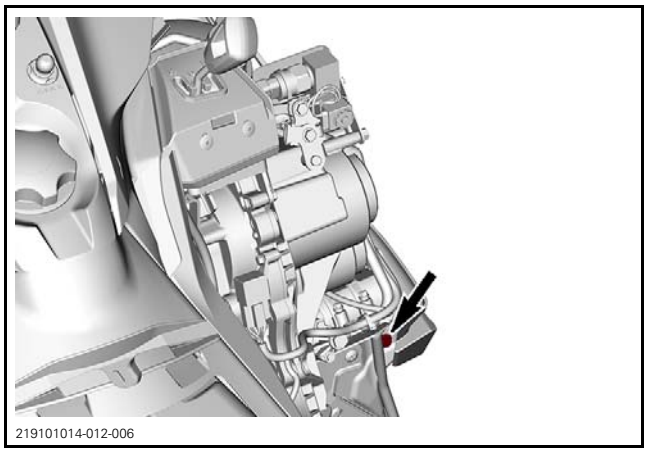
219101014-012-006

5. Move the ACS assembly aside.

### *All Models*

1. Drain the gearbox oil. Refer to procedure in this subsection.
2. Disconnect speed sensor connector.

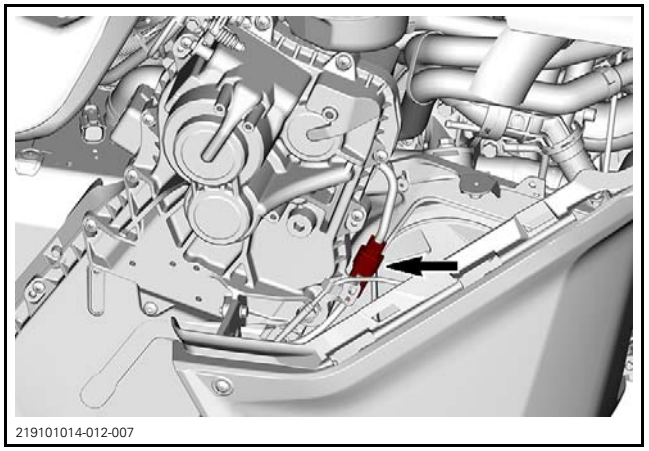
219101014-012-007

3. Remove lower retaining screw from shifter link rod.

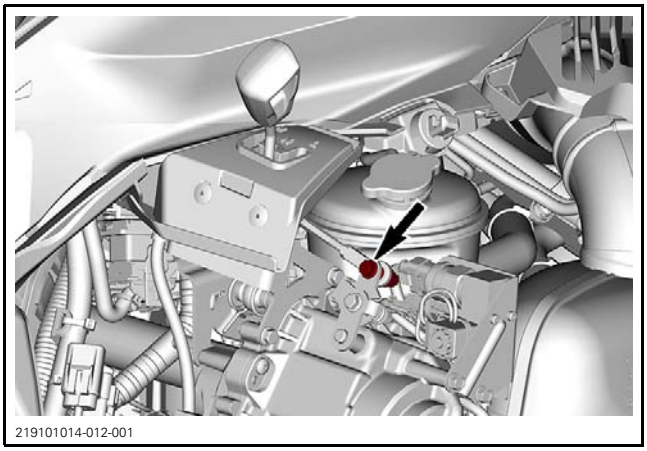
219101014-012-001

4. Unscrew and remove gearbox cover screws.

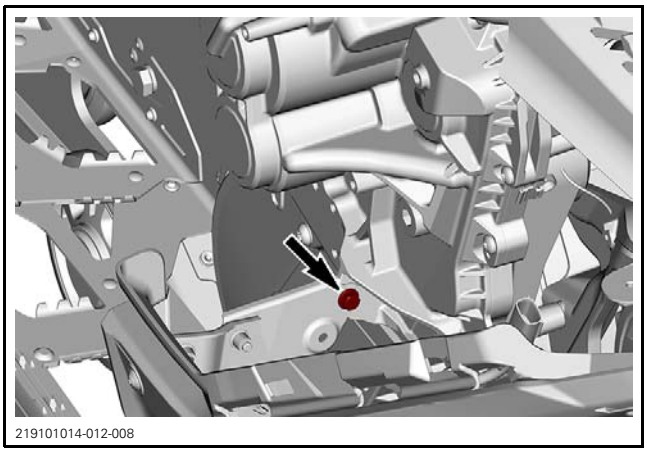
219101014-012-008

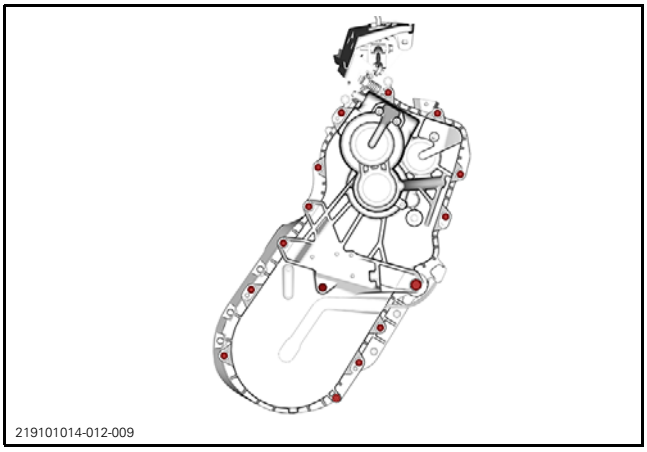
219101014-012-009

5. Pull the bottom of gearbox cover to drain oil.

## Gearbox Disassembly

1. Apply parking brake.
2. Remove gearbox cover. Refer to *REMOVING THE GEARBOX COVER* in this subsection.

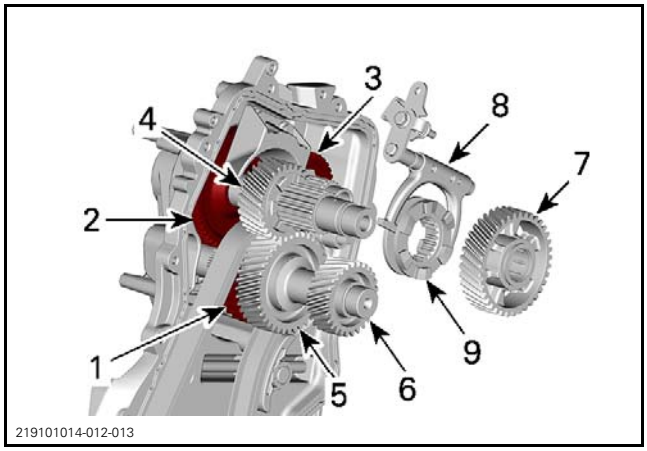

219101014-012-013

1. *Upper chain sprocket*
2. *51 teeth drive gear*
3. *34 teeth drive gear*
4. *28 teeth High gear*
5. *37 teeth High gear*
6. *Output shaft*
7. *37 teeth Low gear*
8. *Shift fork*
9. *Sliding sleeve*

3. Remove the oil deflector.

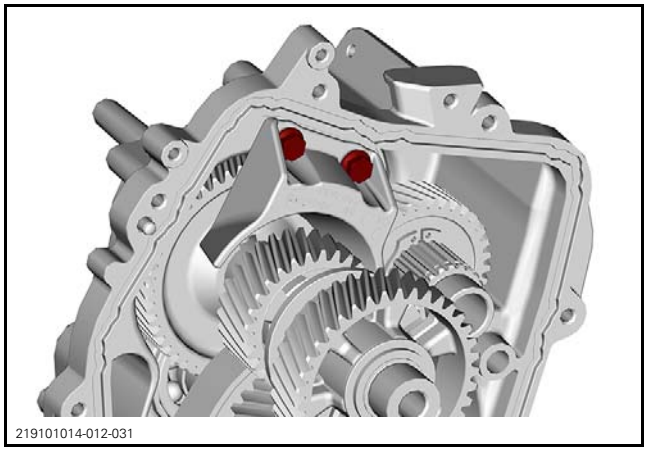
219101014-012-031

4. Loosen chain tension.
5. Remove upper shaft, lower shaft and chain simultaneously.

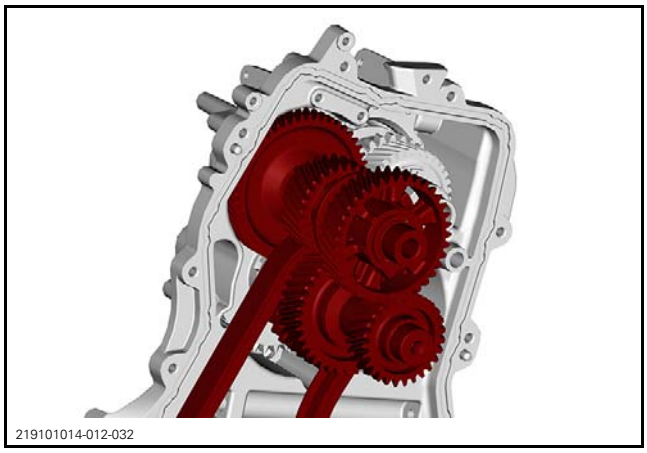
219101014-012-032

6. Remove input shaft assembly.

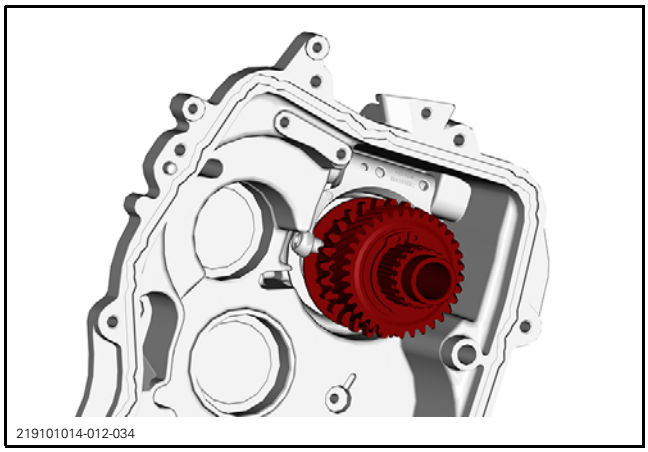


*MODELS WITH ACE ENGINE*

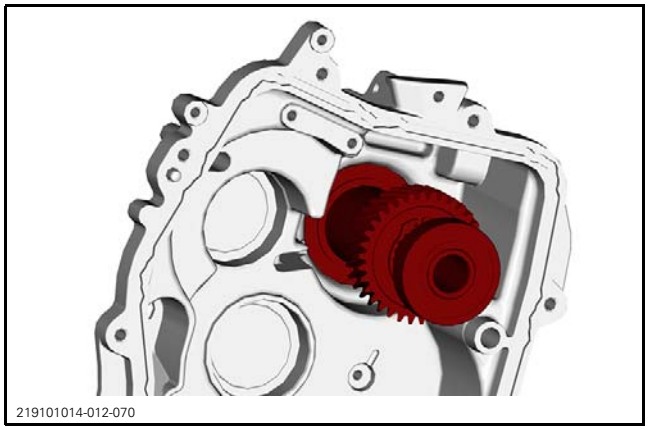


*MODELS WITH E-TEC ENGINE*

### Input Shaft (E-TEC Engine)

Use a press to remove bearings.

Disassemble the input shaft in the following sequence.

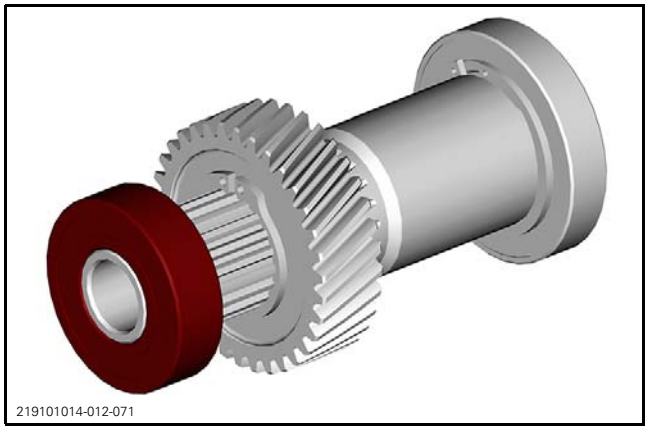


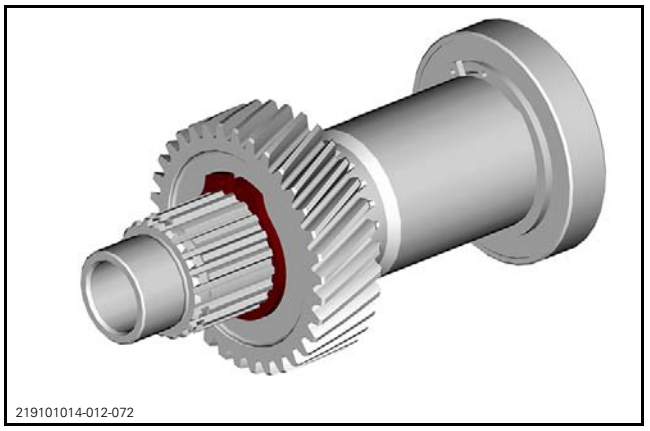


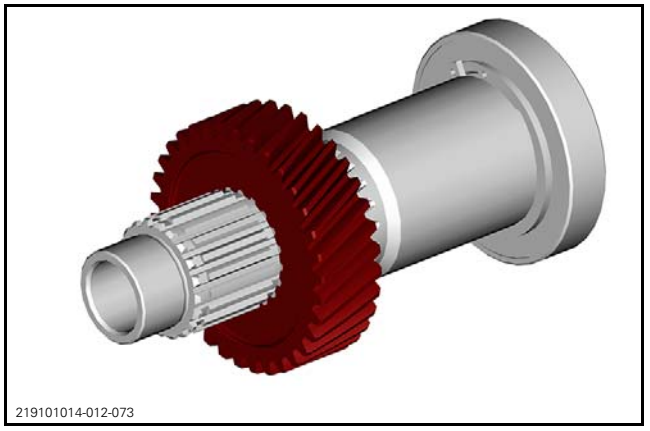


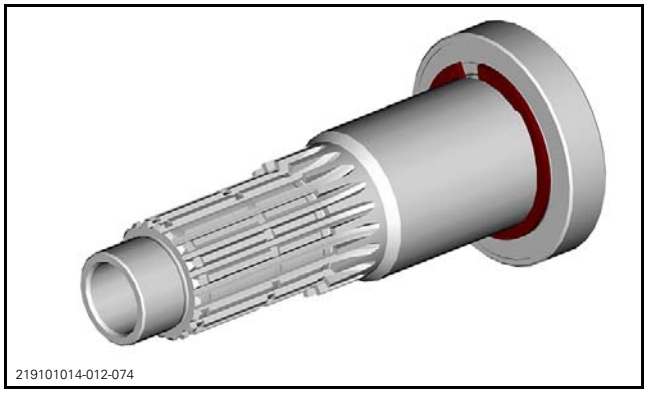


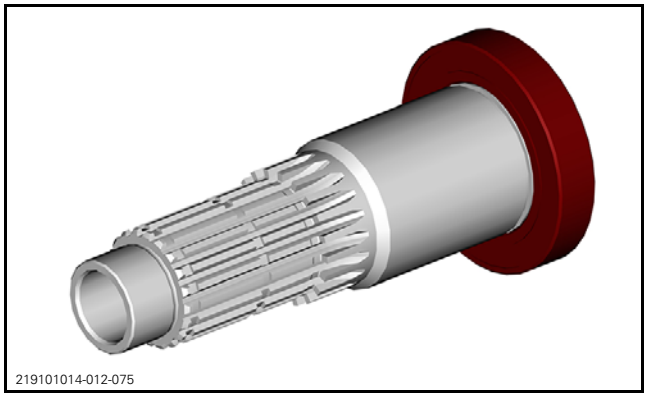


### Input Shaft (ACE Engine)

Use a press to remove bearings.

Disassemble the input shaft in the following sequence.

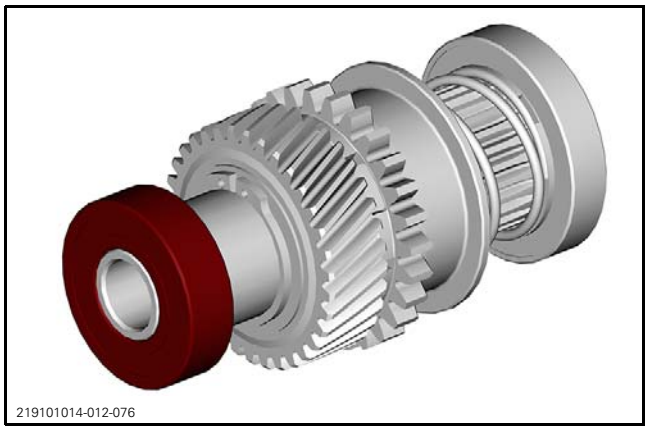
219101014-012-076

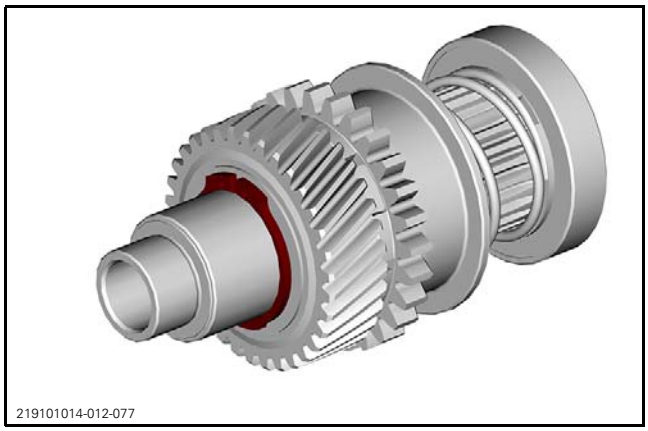
219101014-012-077

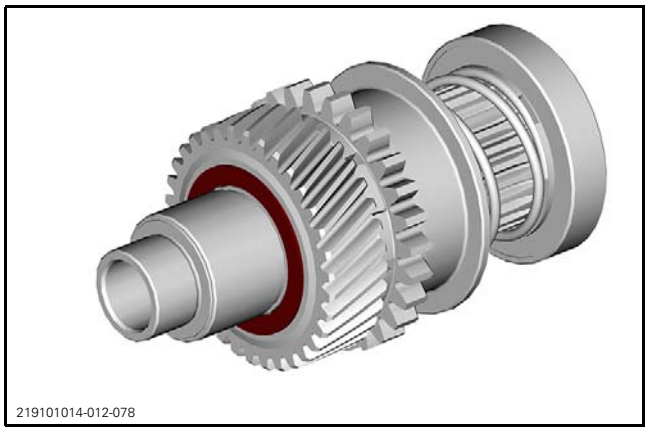
219101014-012-078

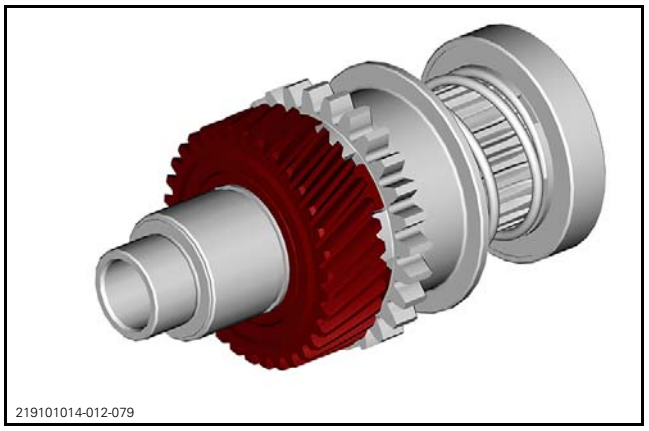
219101014-012-079

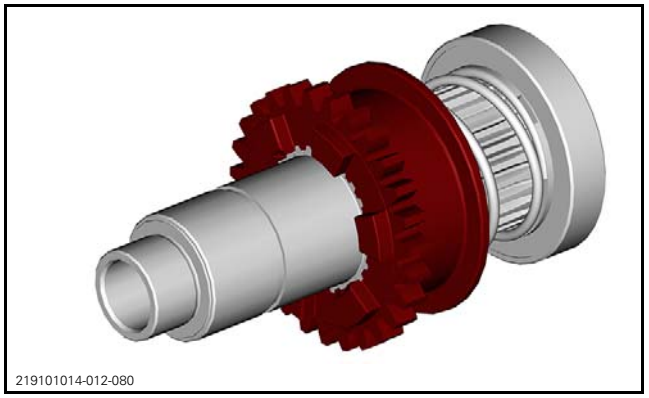
219101014-012-080

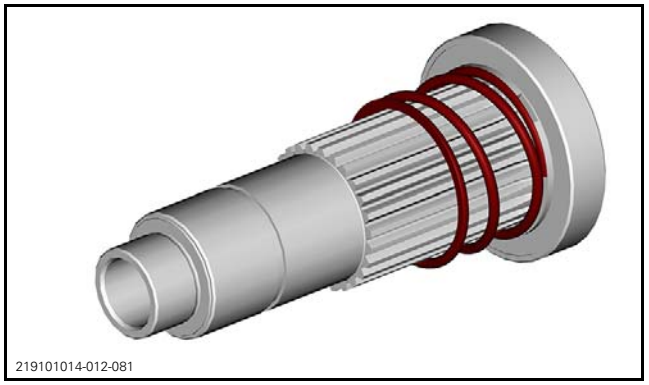
219101014-012-081

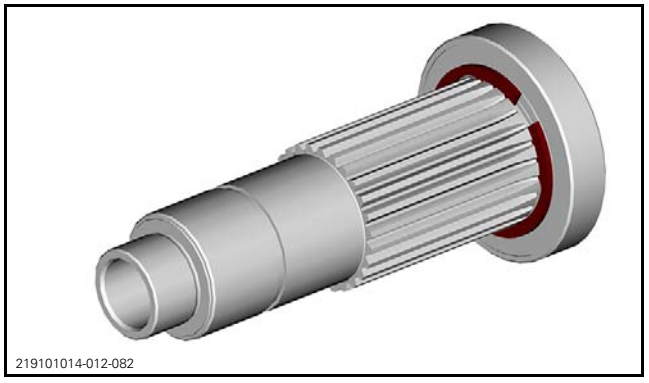
219101014-012-082

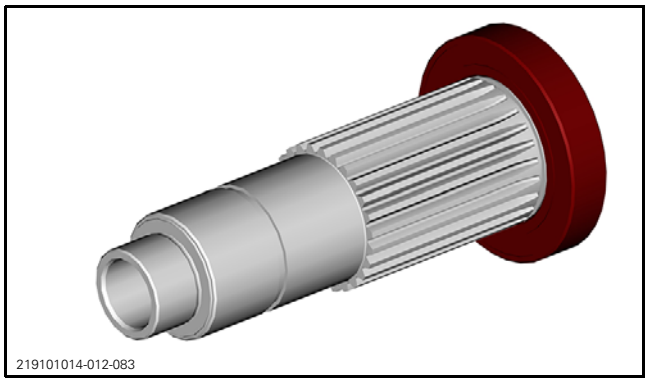


### Lower Gear Shaft

Use a press to remove bearings.

Disassemble the input shaft in the following sequence.

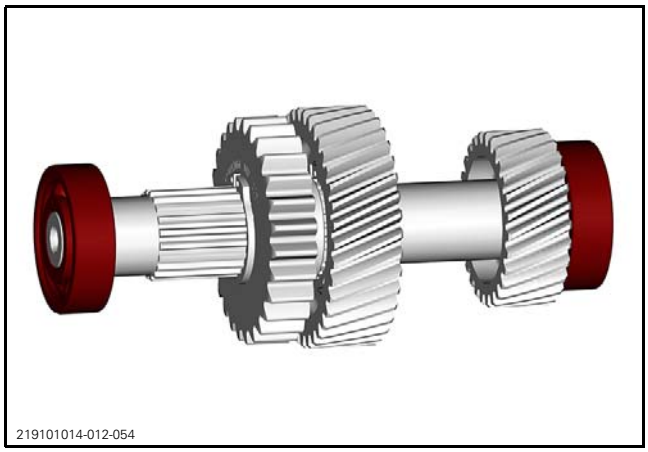


*TYPICAL - E-TEC ENGINE SHOWN*

#### *ACE Engine Models*

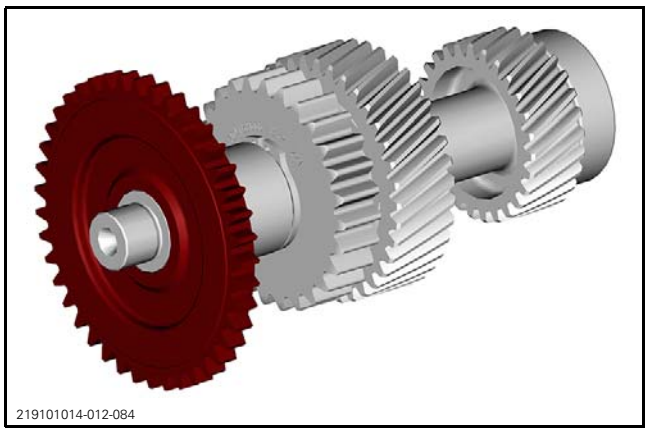


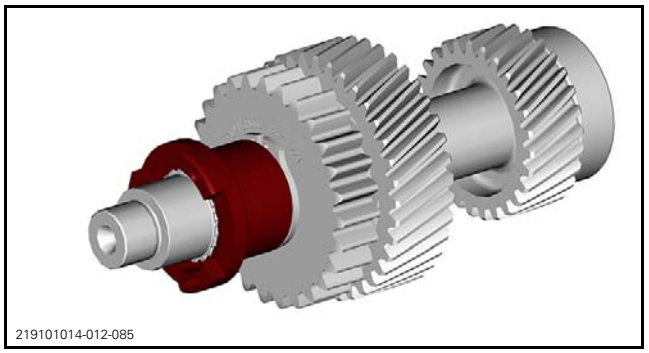


#### *All Models*

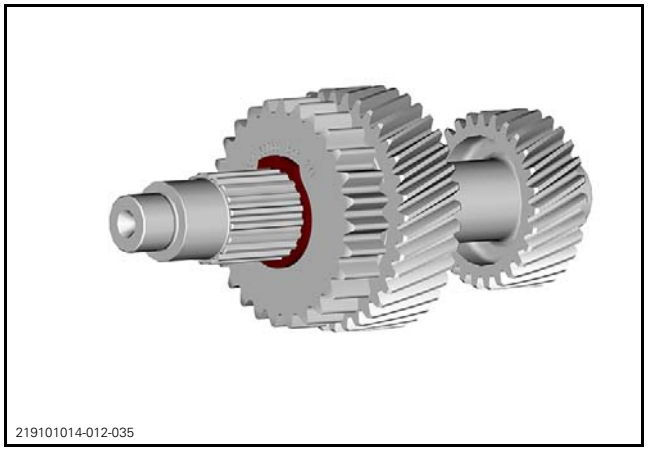


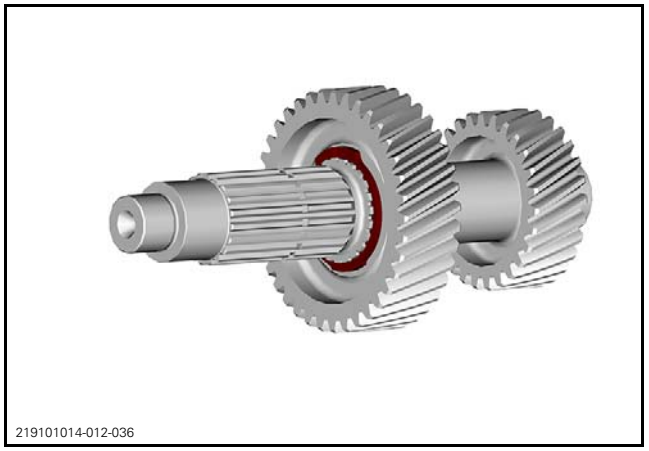


### Upper Gear Shaft

Use a press to remove bearings.

Disassemble the input shaft in the following sequence.

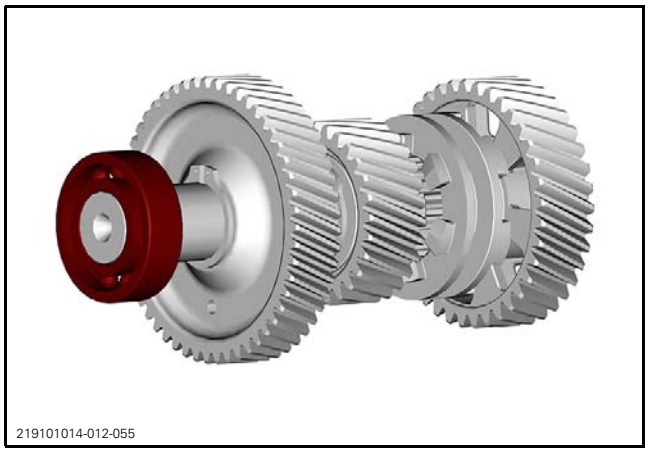
219101014-012-055

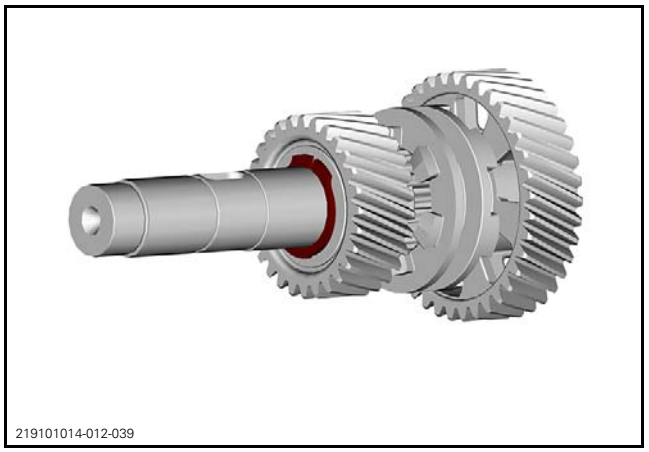
219101014-012-039

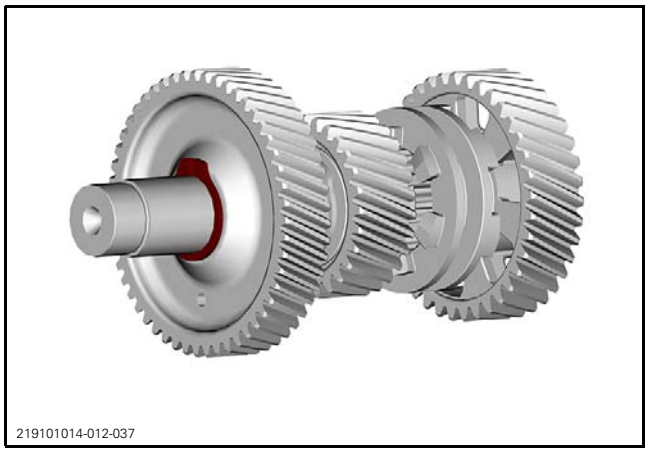
219101014-012-037

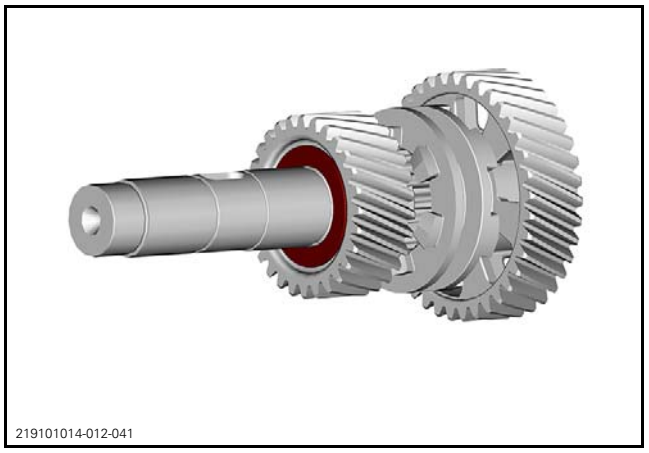
219101014-012-041

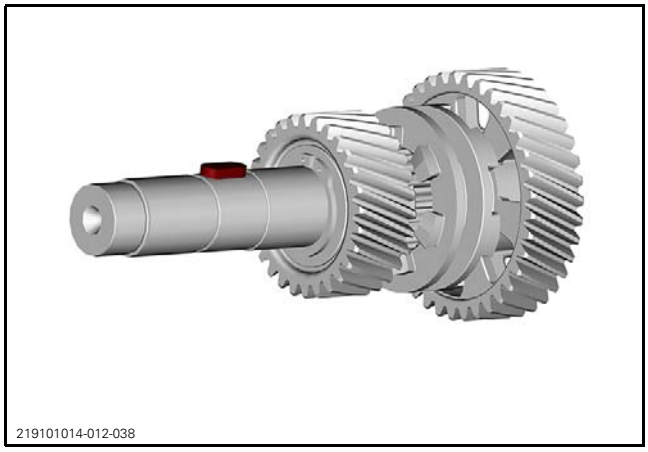
219101014-012-038

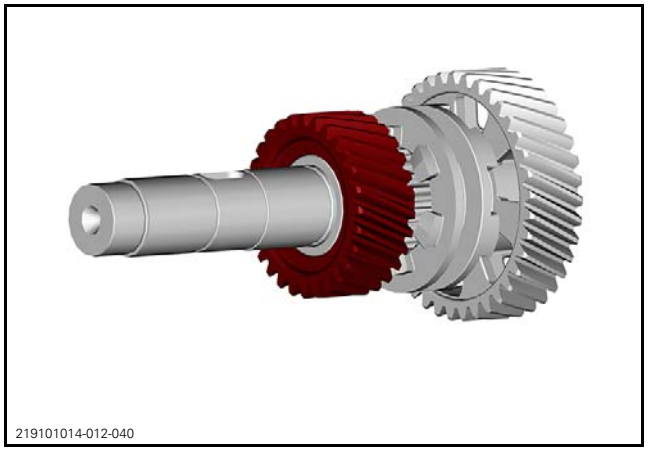
219101014-012-040

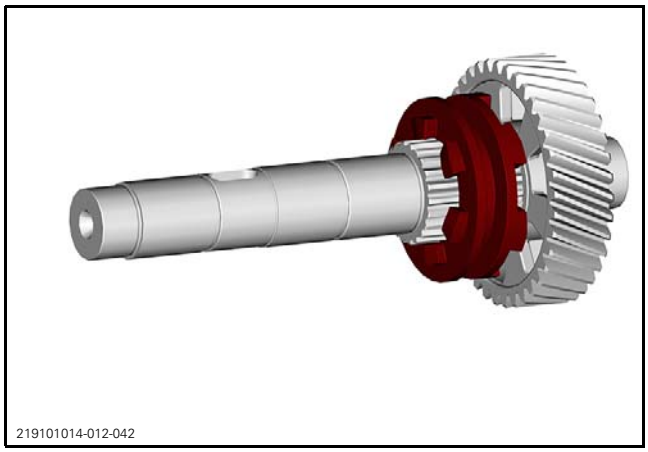
219101014-012-042

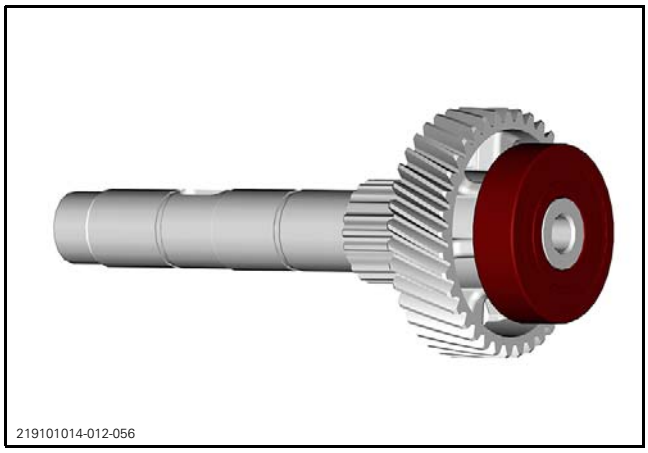
219101014-012-056

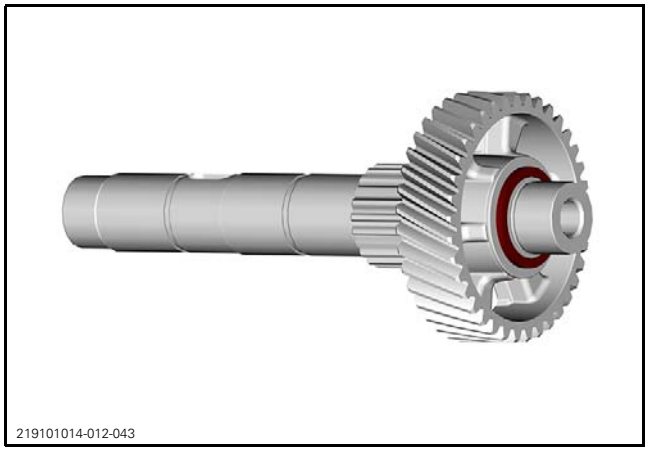
219101014-012-043

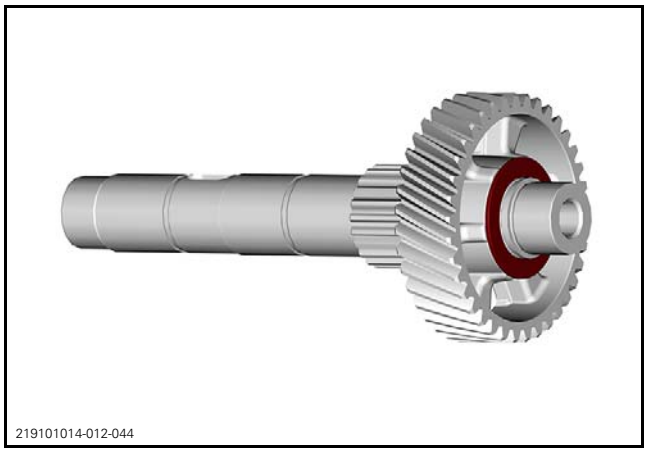
219101014-012-044

### Lower Chain Sprocket

1. Remove the lower sprocket circlip.

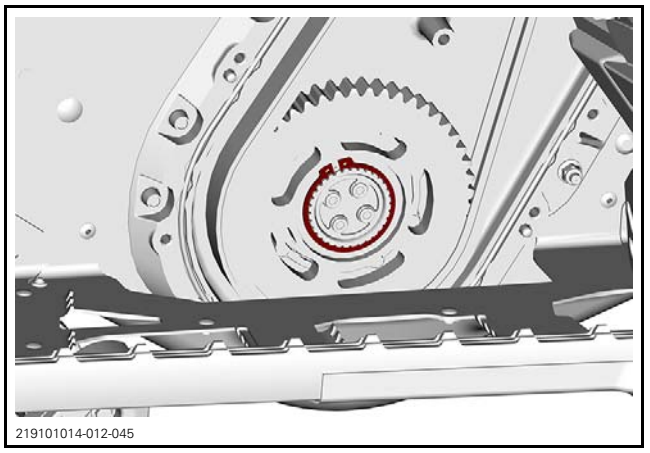
219101014-012-045

2. Loosen the chain tension if upper chain gear still in place.
3. Remove lower sprocket and drive chain simultaneously.

### Chain Tensioner

1. Remove the hair pin from behind the gearbox.

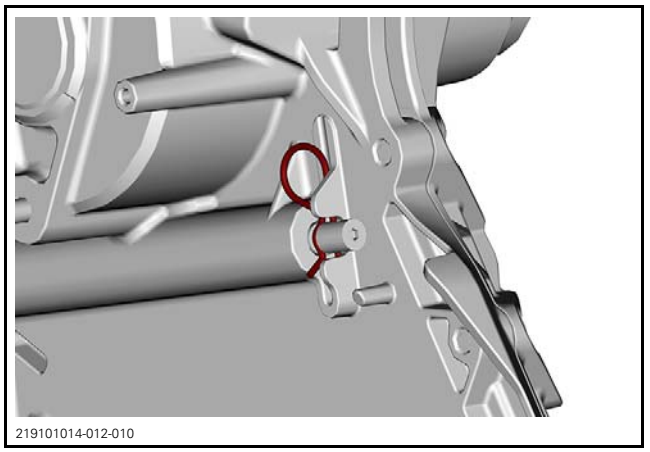
219101014-012-010

2. Remove the tensioner adjustment screw.

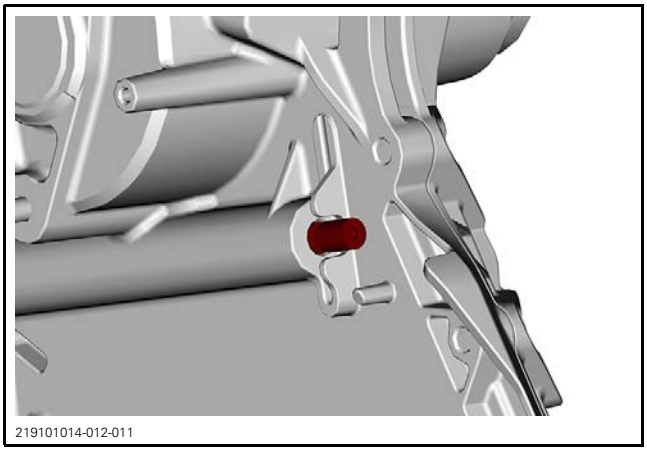
219101014-012-011

3. Remove tensioner.

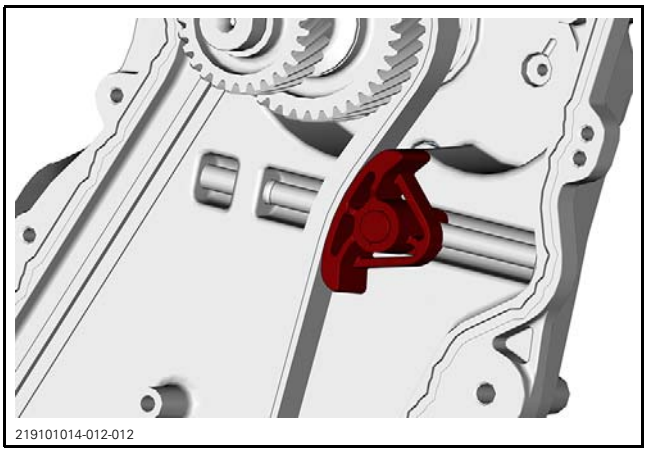
219101014-012-012

NOTE: The following steps are required only if the tensioner or the slider is defective.

4. Remove the circlip securing the slider to tensioner.

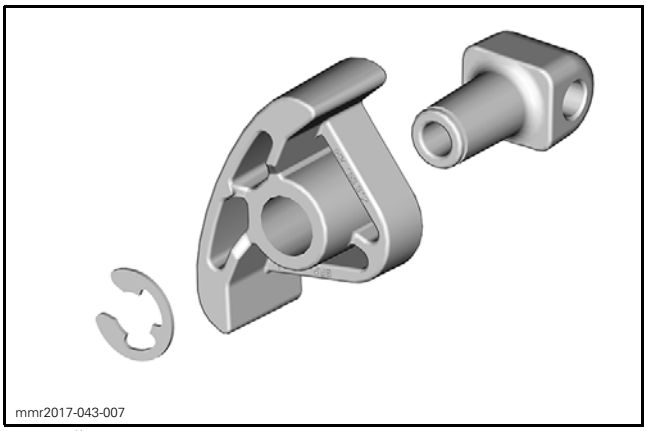
mmr2017-043-007

1. *Circlip*
2. *Tensioner*
3. *Slider*

## Gearbox Upper Oil Seal

| REQUIRED TOOL | |
|---|---|
| UPPER OIL SEAL INSTALLER (P/N 529 036 510) |  |
| Soft head hammer |  |

1. Remove the input shaft. Refer to procedure in this subsection.
2. Gently tap on the tool until the seal comes out of the housing.

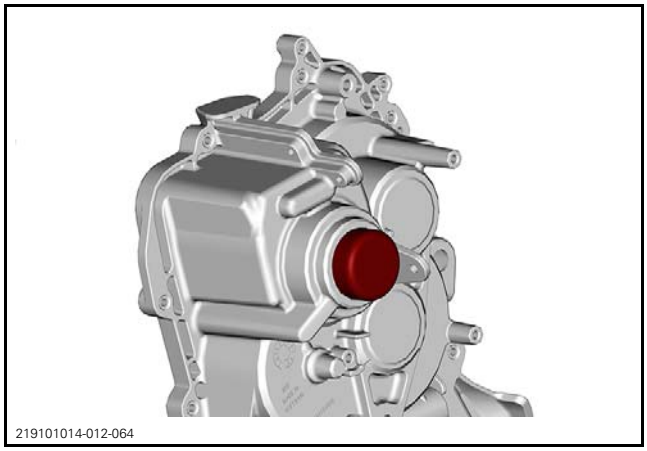
219101014-012-064

*UPPER SEAL*

## Gearbox Lower Bearing and Oil Seal

1. Remove the drive axle. Refer to *DRIVE AXLE* subsection.
2. Remove the snap ring securing bearing into gearbox.

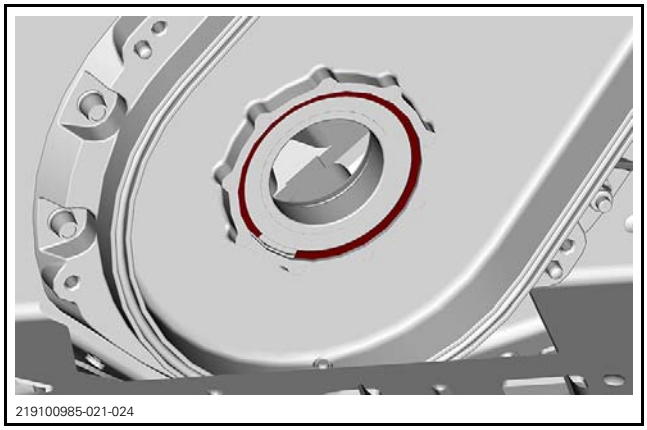
219100985-021-024

| REQUIRED TOOL | |
|---|---|
| BEARING PULLER/PUSHER (P/N 529 036 112) |  |

3. Install the extractor/installer tool behind the bearing.

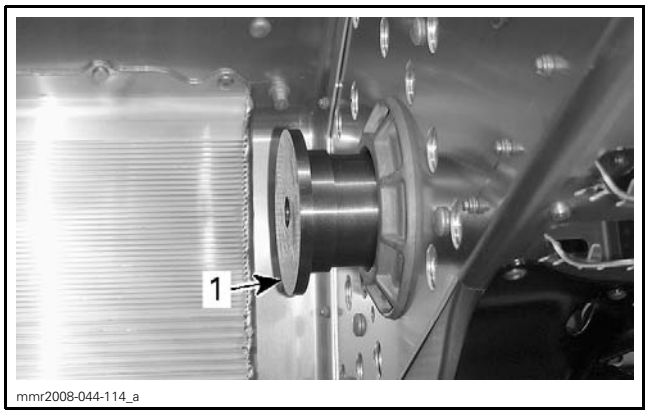


*1. Extractor/installer tool*

4. Install the extractor cup over bearing.
5. Tighten the extractor/installer tool screw to remove the bearing.

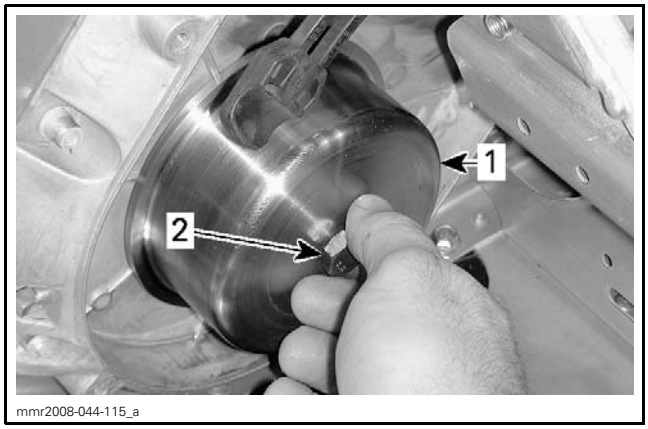


*TYPICAL*
*1. Extractor cup*
*2. Tighten to remove bearing*

6. Using a seal puller, remove and discard the oil seal.

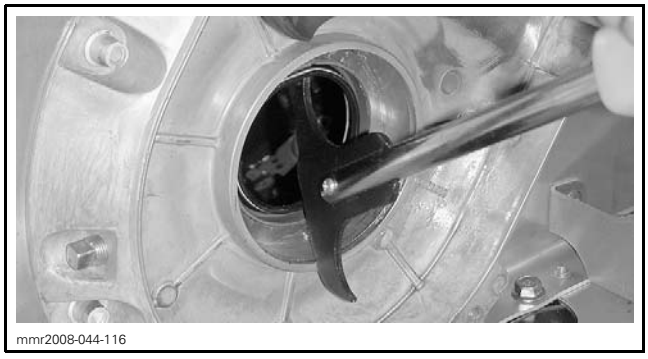


## Removing the Gearbox Housing

1. Disassemble gearbox. Refer to *GEARBOX DISASSEMBLY* in this subsection.
2. Remove drive axle and countershaft. Refer to *DRIVE AXLE* and *DRIVEN PULLEY AND COUNTERSHAFT* subsections.

### *ACE Engine*

3. Remove the upper column retaining screws.

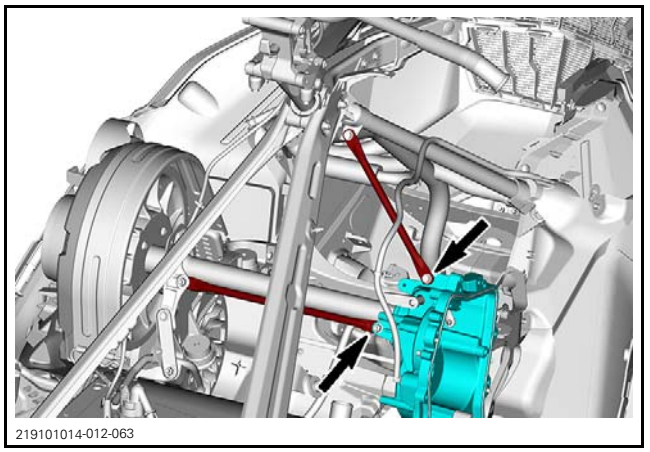


### *All Engines*

4. Remove the nuts and Huck rivets. Refer to *FRAME* subsection for proper removal procedure.

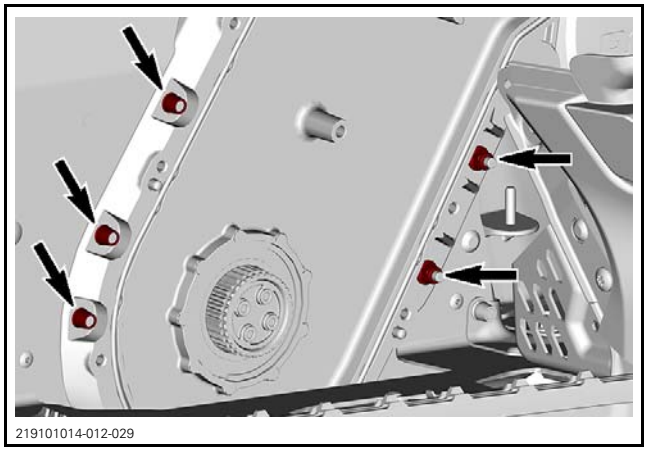


5. Remove the screw above the tensioner.

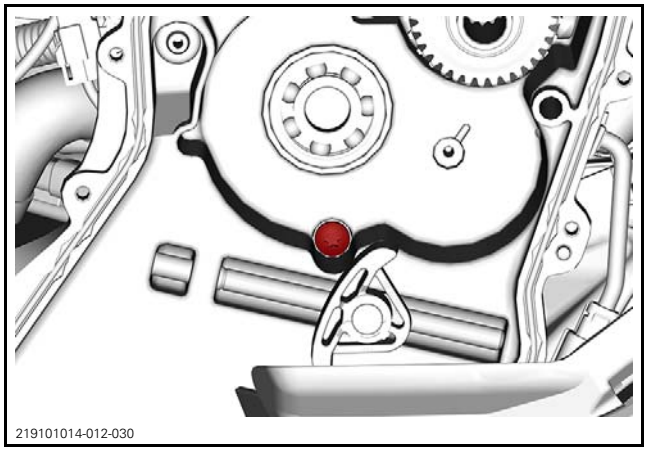

6. Using 2 large pry bars inserted between gearbox and frame, pry gearbox housing out of vehicle.

## Gearbox Inspection

### Gearbox Cover

Inspect cover for cracks or other damages, replace if necessary.

Inspect cover front and rear stopper for crack, replace if necessary.

Inspect O-ring inside cover is brittle, hard or damaged, replace if necessary.

### Spring

Measure spring free length, replace if out of specification.

| SPRING FREE LENGTH | |
|---|---|
| SERVICE LIMIT | 48 mm ± 1 mm (1.89 in ± .04 in) |

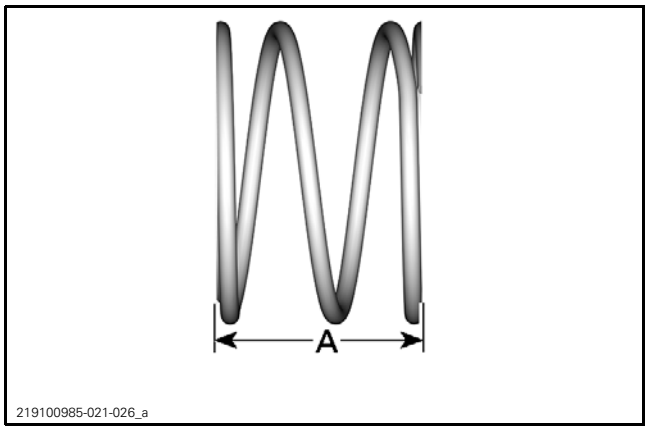


*A. Free length*

### Chain, Gears and Sprockets

Inspect the chain, gears and sprockets for:
- Wear
- Cracks
- Damaged teeth
- Missing links.

If a problem is detected:
- Replace drive chain and sprockets as an assembly.
- Replace upper sprocket and sliding gear as an assembly.

Check the drive chain deflection.

If the deflection is greater than 38 mm (1-1/2 in) without the chain tensioner, replace the drive chain.

### Chain Tensioner

Check chain tensioner slider for wear or other damages. A longitudinal groove in the slider indicate a broken chain link. Replace if necessary.

Check threads of tensioner adjustment screw for damages or wear.

Check straightness of adjustment screw. Replace screw if necessary. Check gearbox for damages.

### Bearings

Inspect all bearings for smooth operation:
- If rough or excessive play is detected, replace bearing.

## Installing the Gearbox Housing

The installation is the reverse of the removal procedure. However, pay attention to the following.

Remove the clinch studs from the frame.

Use a suitable socket to support the frame around the stud head and hit the stud from the outside with a hammer.

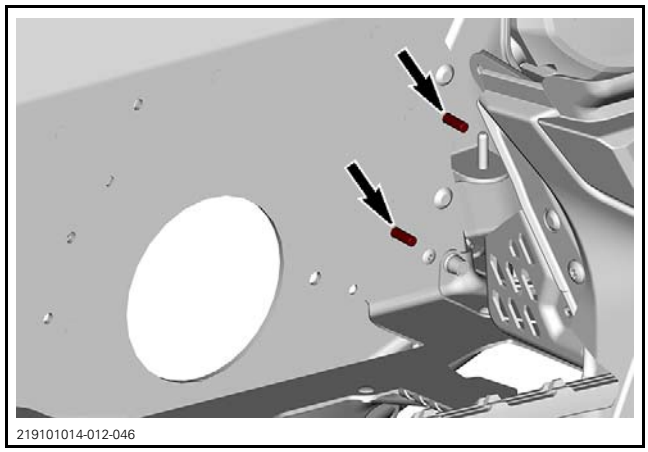


Install the new mounting plate.

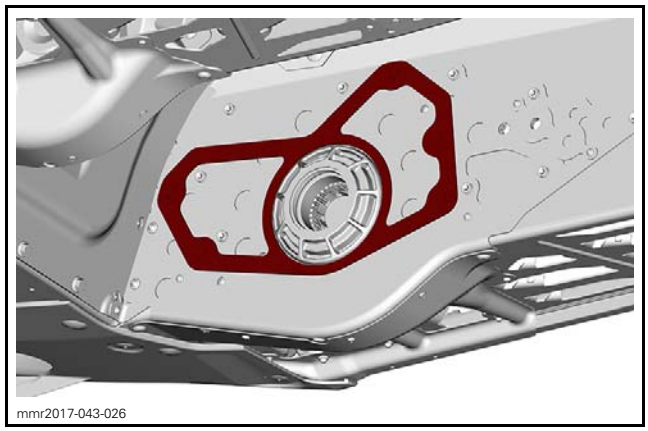


Install 5 elastic flanged nuts to secure gearbox housing on mounting plate.

Tighten fasteners as per the following sequence.

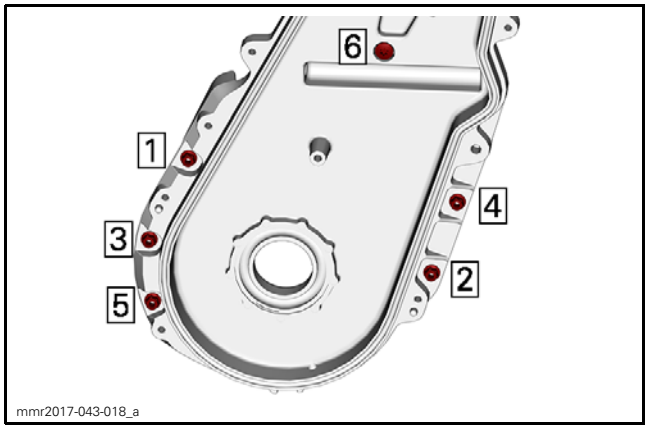


Proceed with drive chain adjustment. Refer to procedure in this subsection.

Refill gearbox with recommended oil. Refer to procedure in this subsection.

## Gearbox Assembly

### Gearbox Lower Bearing and Seal

1. Install the NEW oil seal on the extractor/installer tool. Position the lips toward bearing.

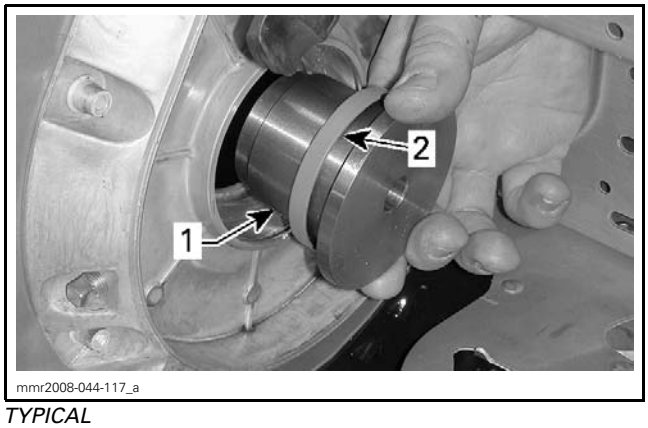


*TYPICAL*
*1. Extractor/installer tool*
*2. Oil seal lips on this side*

2. Install extractor cup inside frame.

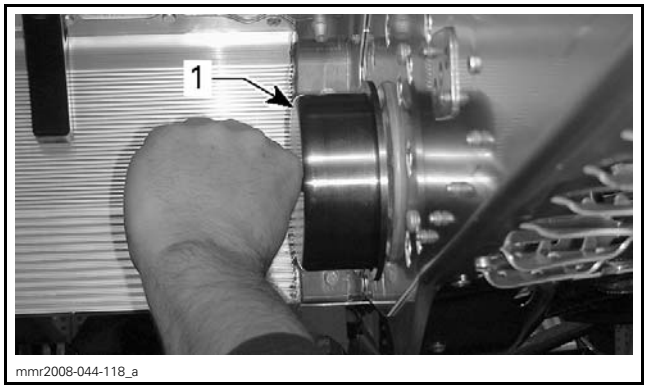


*TYPICAL*
*1. Extractor cup*

3. Tighten extractor/installer tool screw to install the oil seal.
4. Install large washer and extractor/installer tool screw inside frame.

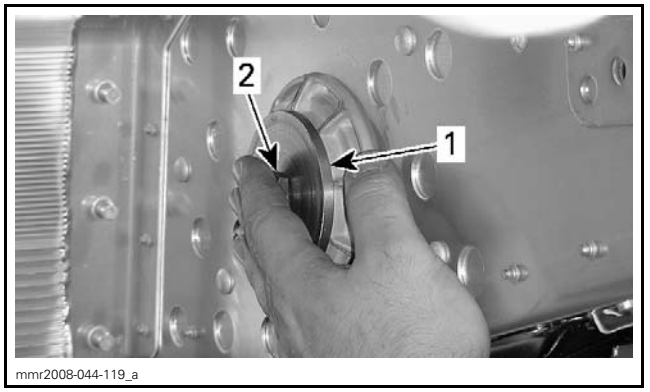


*TYPICAL*
*1. Large washer*
*2. Extractor/installer tool screw*

5. In gearbox, install a NEW bearing and extractor/installer tool.

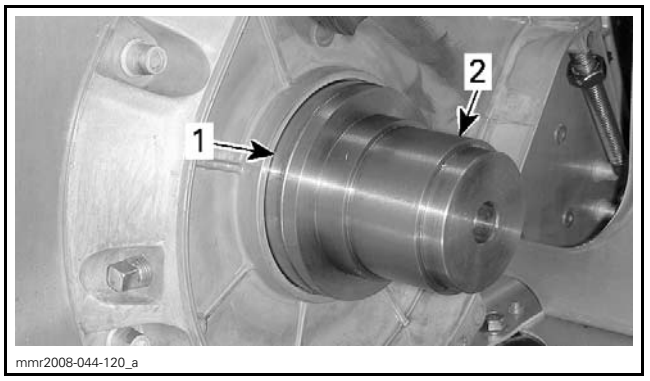


*TYPICAL*
*1. Bearing*
*2. Extractor/installer tool*

6. Tighten extractor/installer tool screw to install the bearing.
7. Remove tool.

### Chain Tensioner

The installation is the reverse of the removal procedure.

### Chain and Lower Sprocket

The installation is the reverse of the removal procedure. However, pay attention to the following.

Install sprocket with its inscription outward.

### Gear Shafts

The installation is the reverse of the removal procedure.

### Gearbox Cover

Install gearbox cover. Refer to *INSTALLING THE GEARBOX COVER* in this subsection.

## Installing the Gearbox Cover

The installation is the reverse of the removal procedure However, pay attention to the following.

Ensure cover O-ring is positioned correctly in its groove.

Tighten screws in the following order.

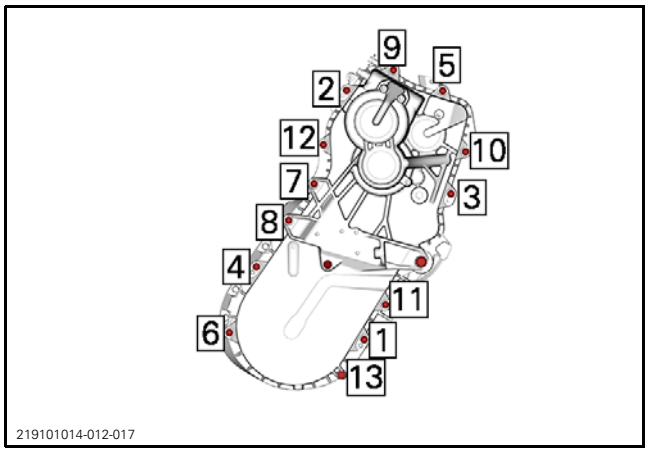

219101014-012-017

| TIGHTENING TORQUE | | |
|---|---|---|
| M6 x 20 Cover screws | Step 1 | 10 N•m ± 2 N•m (89 lbf•**in** ± 18 lbf•**in**) |
| | Step 2 | 15 N•m ± 1 N•m (133 lbf•**in** ± 9 lbf•**in**) |

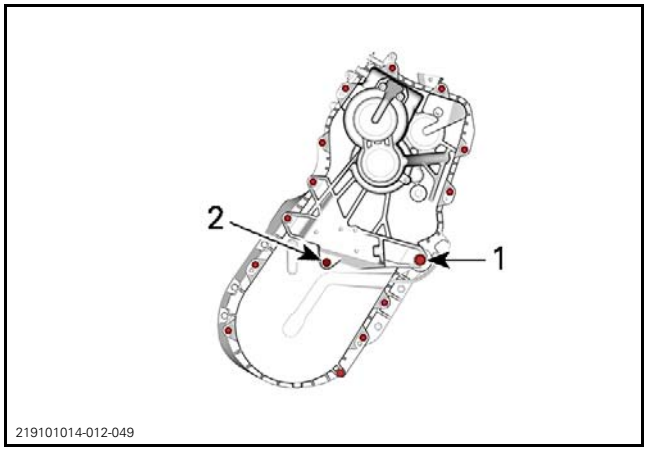

219101014-012-049

*1. M8 x 85 screw*
*2. M8 x 35 screw*

| TIGHTENING TORQUE | |
|---|---|
| M8 x 85 screw | 24.5 N•m ± 3.5 N•m (18 lbf•ft ± 3 lbf•ft) |
| M8 x 35 screw | 16 N•m ± 2 N•m (142 lbf•**in** ± 18 lbf•**in**) |

Adjust shift linkage, refer to *ADJUSTING THE SHIFTER LINK ROD* in this subsection.

Refill gearbox. Refer to *REPLACING THE GEARBOX OIL* in this subsection.

# SHIFT FORK

NOTE: The procedure is the same for the HI-LOW and the REVERSE forks unless otherwise specified.

## Removing the Shift Fork

1. Remove spring pins using a punch.

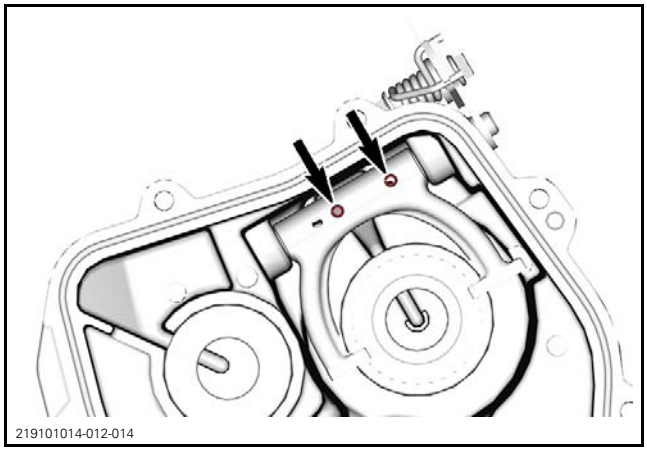
219101014-012-014

*HI-LOW FORK*

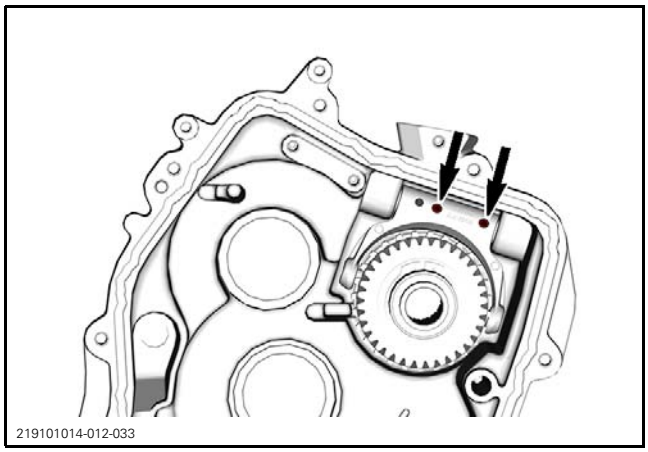


*REVERSE FORK - ACE ENGINE*

2. Pull out shift rod from gearbox cover.
3. Remove shift fork.

## Inspecting the Shift Fork

Inspect shift fork for straightness, wear or other damages. Replace if necessary.

## Installing the Shift Fork

The installation is the reverse of the removal procedure However, pay attention to the following.

Ensure that seal is properly lubricated and seated on the shift fork lever.

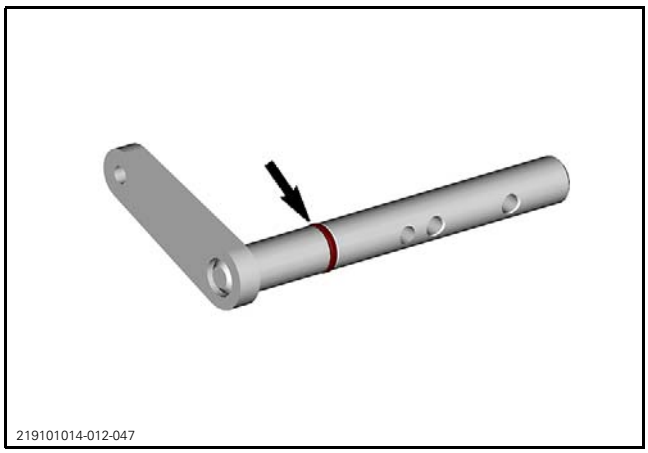


| SERVICE PRODUCT | |
|---|---|
| Scandinavia | SYNTHETIC GREASE (EUR) (P/N 779231) |
| All other countries | SYNTHETIC GREASE (P/N 779162) |

Position shift fork lever parallel to the casting as shown.

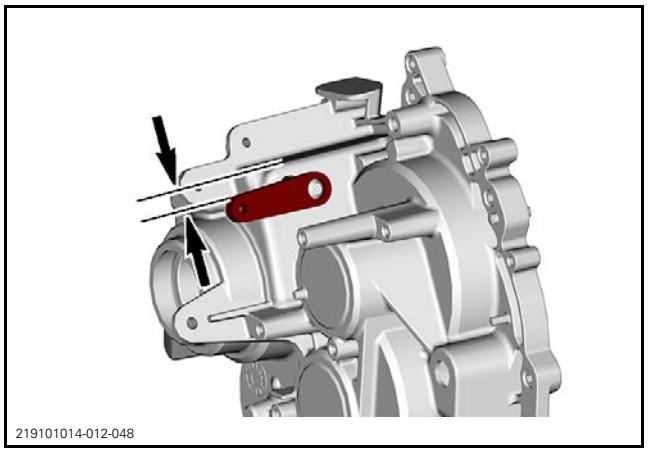


*REVERSE SHIFT FORK*

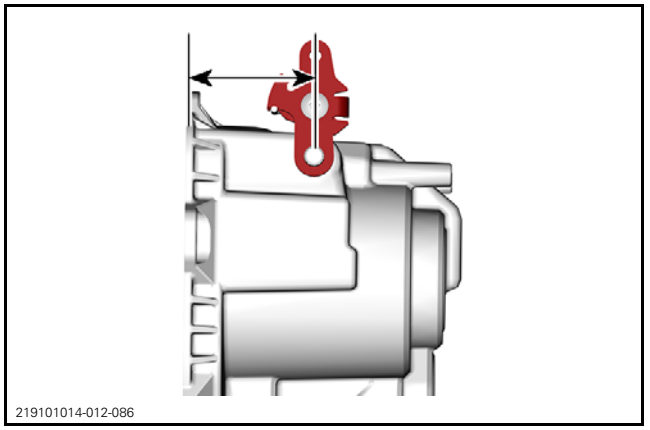


*HI-LOW SHIFT FORK*

Install new spring pins into both holes.

# SPEED SENSOR (VSS)

The speed sensor is a hall effect sensor.

## Speed Sensor Location

The speed sensor is mounted in the gearbox cover.

## Testing the Speed Sensor Signal

1. Ensure speed sensor is properly connected.
2. Wake up ECM.
3. Back-probe VSS connector as per table and test for proper specification.

**NOTICE** **Be careful not to damage connector seals when back probing.**

| SPEED SENSOR SIGNAL TEST | | |
|---|---|---|
| SPEED SENSOR CONNECTOR (SENSOR SIDE) | Frame | SPECIFICATION |
| Pin 1 | Ground | 5 Vdc |
| Pin 2 | | |

If test failed, check wiring harness going to ECM.

4. Lift and support rear of vehicle.
5. Back-probe VSS connector as per table and test for proper specification.
6. Rotate track/driven pulley.

| SPEED SENSOR SIGNAL TEST | | | |
|---|---|---|---|
| ROTATE DRIVEN PULLEY | SPEED SENSOR CONNECTOR (SENSOR SIDE) | | SPECIFICATION |
| | Pin 1 | Pin 2 | Alternate 7 Vdc and 0 Vdc |

If reference voltage and ground are available at sensor, but no signal, replace sensor.

NOTE: During gearbox disassembly, ensure magnets are intact on shaft.

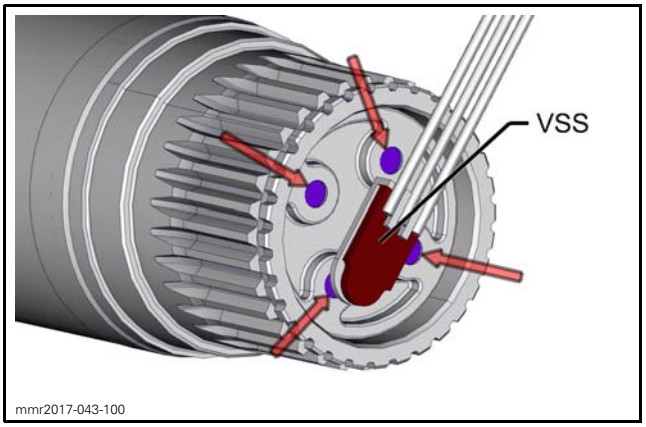


Measure the distance between magnetic cap and end of shaft. It must be as specified.

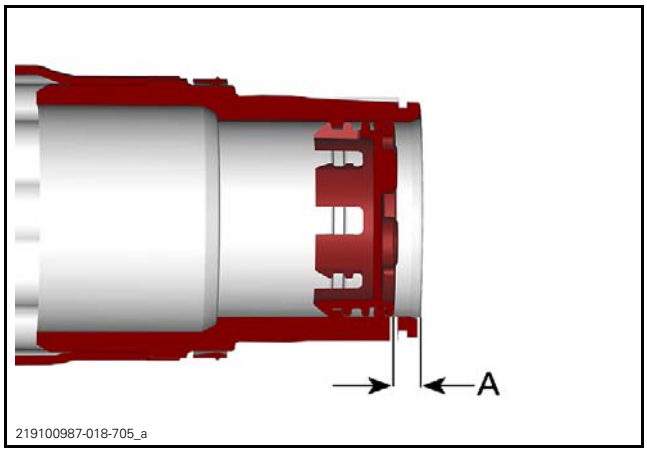


*A. Distance to measure*

| DISTANCE SPECIFICATION | |
|---|---|
| no. A Measured between magnetic cap and shaft end | 5 mm (.2 in) |

## Replacing the Speed Sensor

The sensor can be replaced with the gearbox cover as an assembly. In such a case, refer to *REMOVING THE GEARBOX COVER* in this subsection.

To replace sensor only, proceed as follows.

### Removing the Speed Sensor

1. Remove gearbox cover. Refer to procedure in this subsection.
2. Heat the upper end of the speed sensor protective plate with a heat gun.

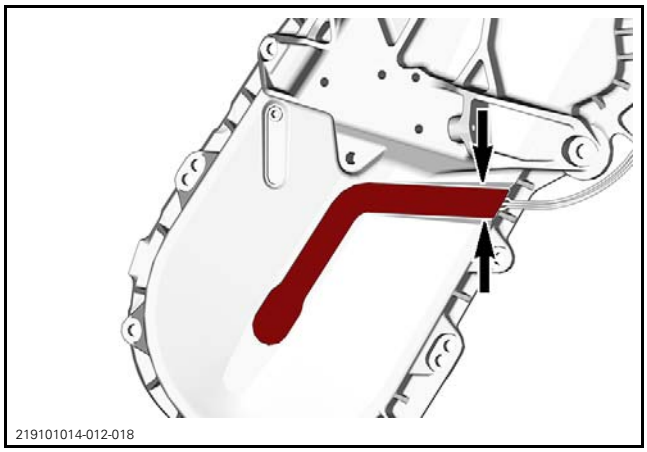


3. Use a flat screwdriver to pry out the end of the protective plate from gearbox cover.

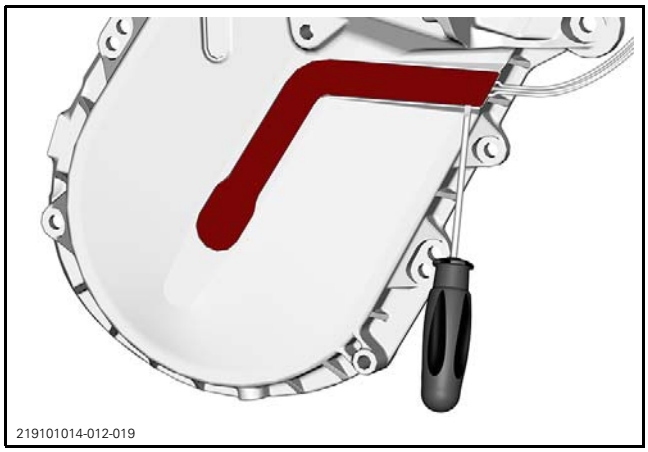


**NOTICE** Use care when prying out the plate not to damage the gearbox cover.

4. Heat the next section of the plate.
5. Pry out the heated section using the flat screwdriver.
6. Repeat steps 4 and 5 until the protective plate is completely removed.
7. Remove the speed sensor.
8. Use the flat screwdriver to remove the remaining sealant from the gearbox cover.

**NOTICE** Do not apply excessive pressure when removing the remaining sealant not to damage the gearbox cover.

9. Remove the sealant using a scouring pad.

### Installing the Speed Sensor

Make sure surface is clean and free of grease.

The assembly must be watertight.

| PRODUCT REQUIRED |
|---|
| LOCTITE 5900 (P/N 293 800 066) |

1. Apply 3 beads of sealant in the gearbox cover as per the following illustration.

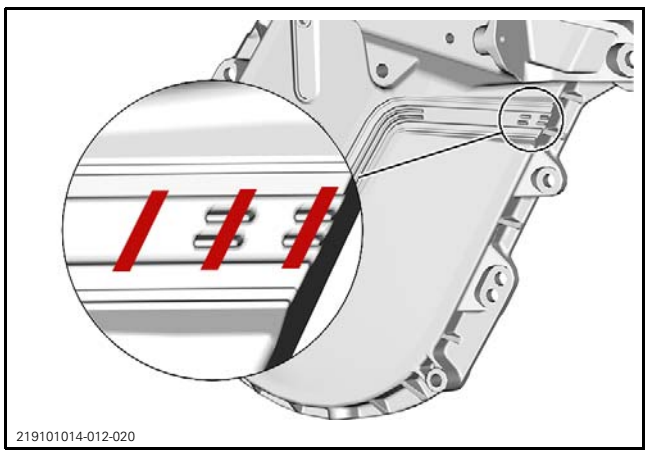


2. Install the speed sensor in the gearbox cover.

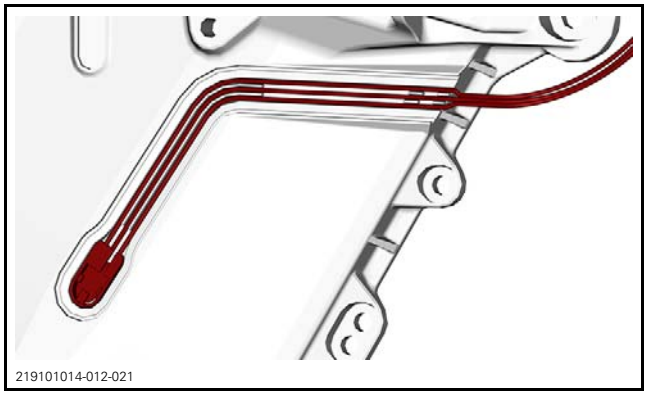


3. Apply sealant all around the protective plate bed of the gearbox cover.

Follow the pattern shown in the next picture.

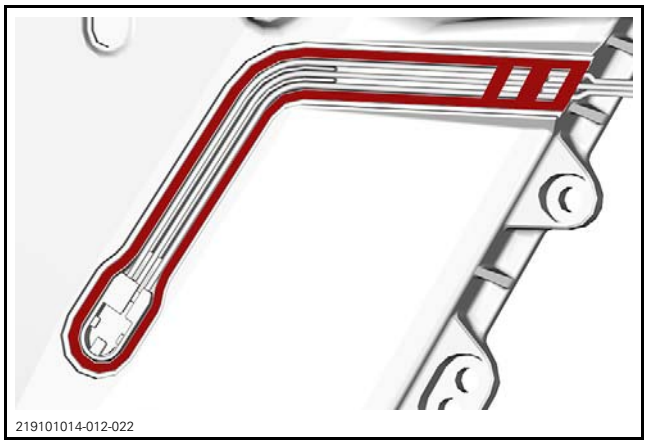


4. Place the protective plate in position and firmly push in order to evacuate all the surplus sealant. Keep pressure for at least 1 minute.
5. Wipe off all the sealant surplus.
6. Once cleaned up, inspect all the circumference for sealant.

NOTE: Sealant must be visible all around.

7. Place some adhesive tape on the protective plate to maintain a pressure for at least 24 hours.

NOTE: Wait for at least 1 hour before exposing vehicle to cold temperature.

8. Reinstall gearbox cover. Refer to procedure in this subsection.

# DRIVE AXLE

## SERVICE PRODUCTS

| Description | Part Number | Page |
|---|---|---|
| SYNTHETIC SUSPENSION GREASE | 779163 | 503 |

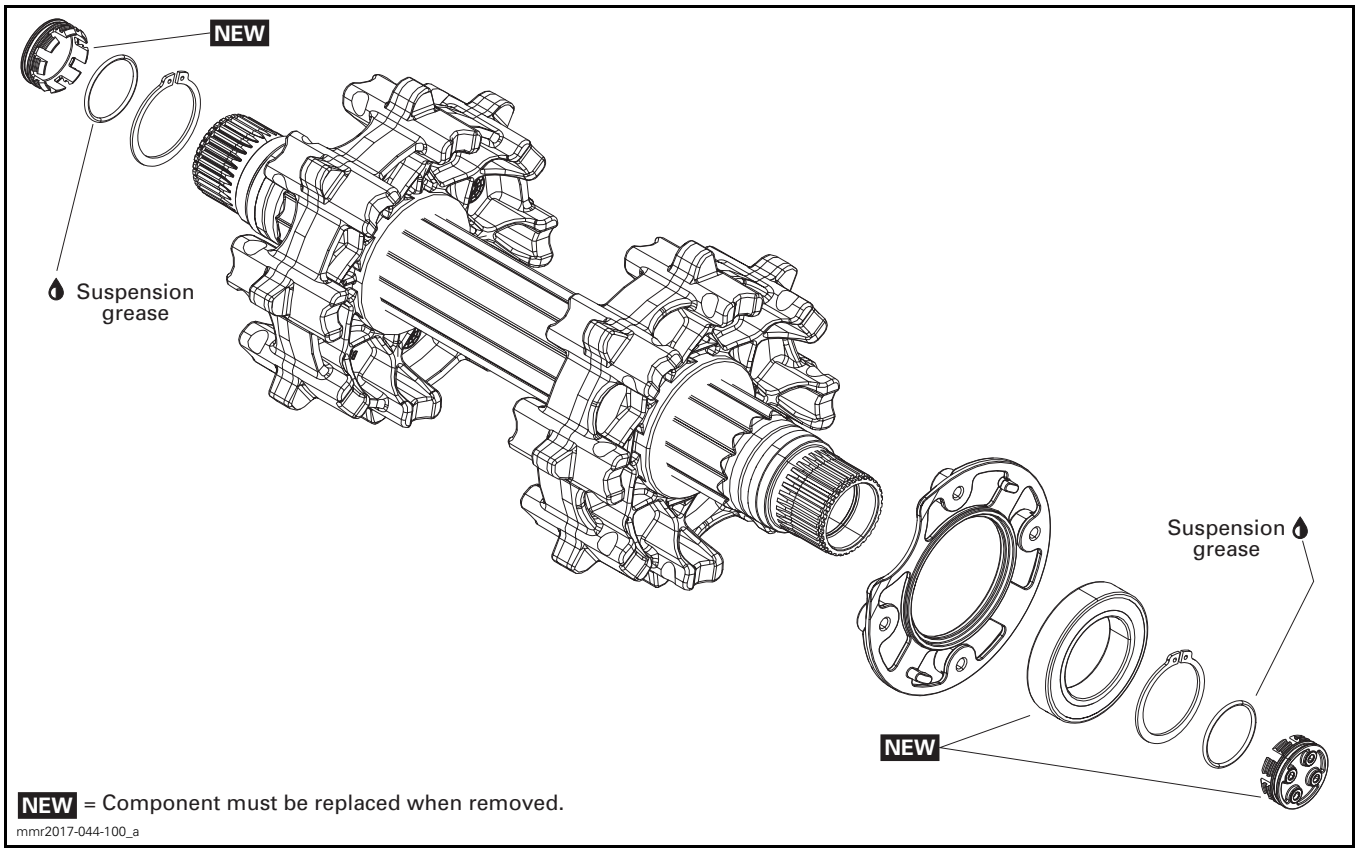

# GENERAL

During assembly or installation, use torque values and service products as in the exploded view.

Clean threads before applying a threadlocker. Refer to *SELF-LOCKING FASTENERS* and *LOCTITE APPLICATION* at the beginning of this manual for complete procedure.

**⚠ WARNING**

**Torque wrench tightening specifications must be strictly adhered to.**
**Locking devices must be replaced with new ones when removed (e.g.: locking tabs, elastic stop nuts, cotter pins, etc.).**

# PROCEDURES

## DRIVE AXLE

### Removing the Drive Axle

1. Remove the rear suspension. Refer to *REAR SUSPENSION* subsection.
2. Remove the chaincase cover. Refer to *CHAINCASE* subsection.
3. Release tension from drive chain by unscrewing the tensioner adjustment screw.

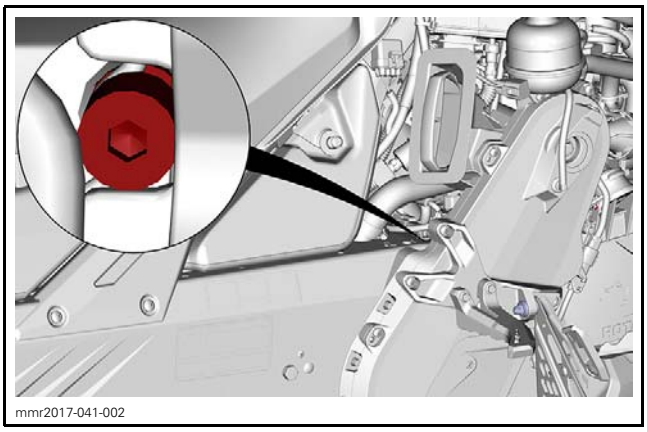
mmr2017-041-002

4. Remove the lower sprocket circlip.

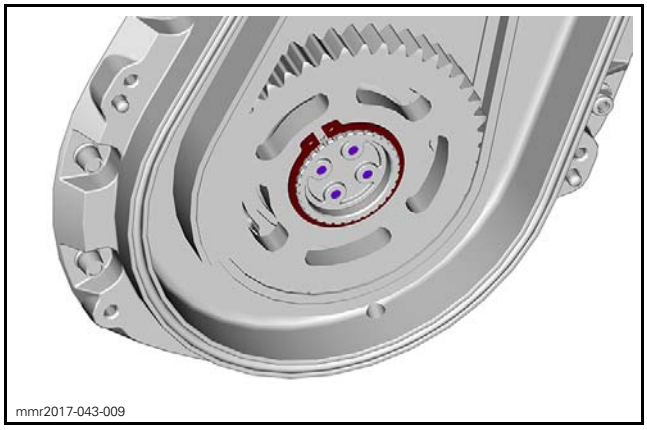
mmr2017-043-009

5. Remove lower gear and drive chain.
6. Remove the caliper. Refer to *BRAKE* subsection.
7. From underneath of vehicle, turn the LH bearing flange counterclockwise to unlock it from frame.

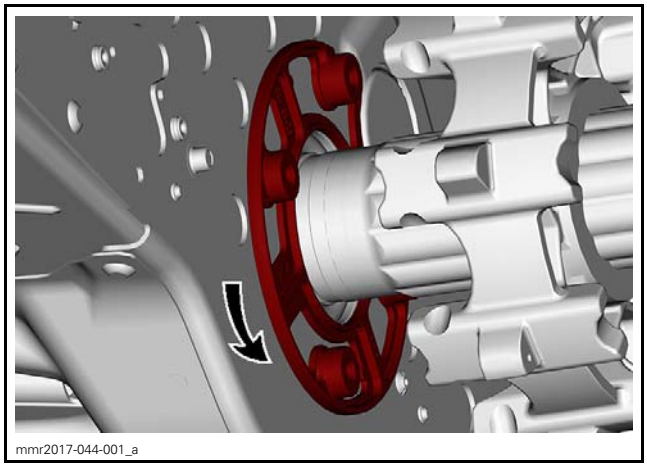
mmr2017-044-001_a

8. Release drive axle sprockets from track and at the same time, push the drive axle towards left side until it comes out of the chaincase.
9. Move the drive axle towards the right side to remove it from vehicle.

### Inspecting the Drive Axle

Check if bearing turns smoothly and freely. Replace bearing if necessary.

Check if bearing seals are damaged. Replace bearing if necessary.

Check if the bearing flange is cracked, bent or otherwise damaged. Replace if required.

Replace drive axle if one of the following situations is detected:

– Cracked, worn or damaged drive axle
– Worn or damaged drive axle splines

– Worn or damaged sprockets
– Worn bearing journal.

### Removing the Drive Axle Bearing

1. Use a 3-jaw puller to remove the drive axle bearing.

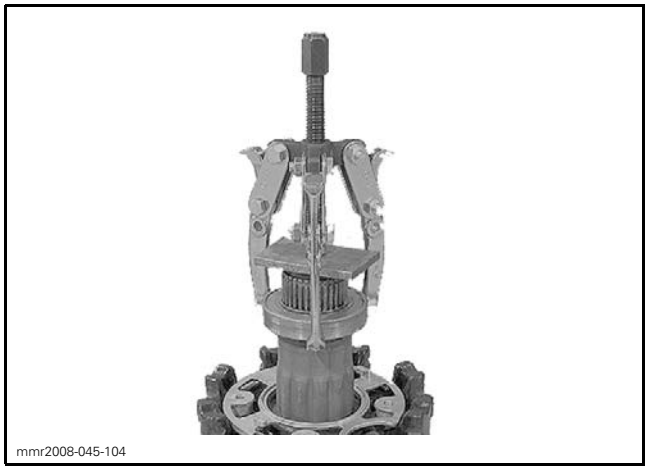
mmr2008-045-104

2. Remove the bearing flange.

### Installing the Drive Axle Bearing

1. Install bearing flange on drive axle with locking tabs outwards.

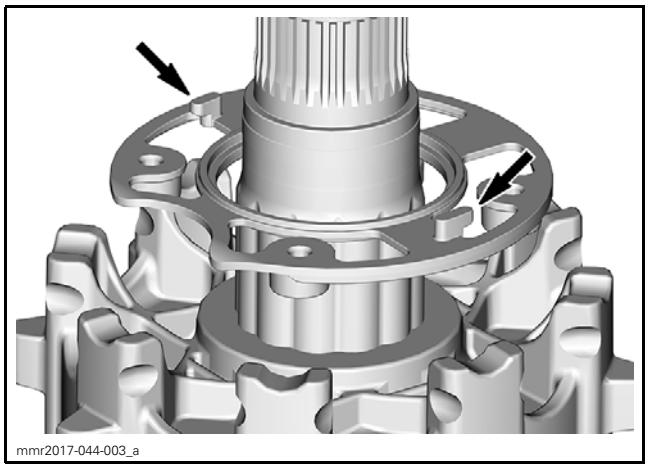
mmr2017-044-003_a

2. Using a press and a suitable pipe, push the bearing onto drive axel.

**NOTICE** **Always push the bearing by inner race.**

### Installing the Drive Axle

The installation is the reverse of the removal procedure. However, pay attention to the following.

Insert drive axle and lock the bearing flange on frame.

NOTE: Ensure bearing flange is properly locked. Tabs must be properly inserted in frame slots.


mmr2017-042-010

*VIEW FROM OUTSIDE FRAME*

Install the caliper and the disc brake. Refer to *BRAKE* subsection for the specific procedure.

Install all other removed parts. Refer to appropriate subsections.

## MAGNETIC CAPS

### Removing the Magnetic Cap

1. For the LH cap, remove brake disc protective cover. Refer to *BRAKE* subsection.
2. For the RH cap, remove the chaincase cover. Refer to *CHAINCASE* subsection.
3. By screwing a large screw in the middle of the cap, pry or pull the magnetic cap out of drive axle end.
4. To remove the other cap, push through axle with a long metal bar or wood stick.
5. Discard the magnetic cap.

### Installing the Magnetic Cap

1. Apply grease on O-ring.

| SERVICE PRODUCT |
| --- |
| SYNTHETIC SUSPENSION GREASE (P/N 779163) |

2. Insert new magnetic cap in drive axle, Push until caps is secure into groove.

NOTE: Cap should have outside contour face 5 mm (.197 in) inwards.

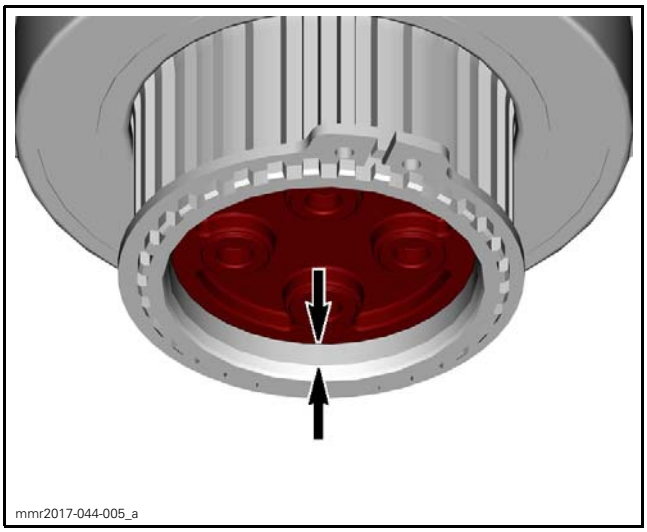


*5 MM (.197IN) INWARDS*

3. Install all other removed parts.

# TRACK

## SERVICE TOOLS

| Description | Part Number | Page |
|---|---|---|
| TENSIOMETER | 414 348 200 | 505 |
| TRACK CLEAT INSTALLER | 529 036 044 | 507 |

## MAINTENANCE

### INSPECTING THE TRACK

Visually inspect track for:
- Cuts and abnormal wear
- Broken rods
- Broken or missing track cleats
- Perforations in the track
- Tears in the track (particularly around traction product holes)
- Lugs that are broken or torn off, exposing portion of rods
- Delamination of the rubber
- Missing track guide(s).

If track is damaged or rods are broken, replace track. For damaged or missing cleats, replace by new ones.

**⚠ WARNING**

**Do not operate a snowmobile with a cut, torn or damaged track.**

### ADJUSTING AND ALIGNING THE TRACK

Track tension and alignment are interrelated. Do not adjust one without checking the other. Track tension procedure must be carried out prior to track alignment.

#### Verifying the Track Tension

1. Lift rear of vehicle and support it off the ground.
2. Allow rear suspension to fully extend.
3. Use a tensiometer.

| REQUIRED TOOL |
|---|
| TENSIOMETER (P/N 414 348 200)  |

4. Set deflection to 3.2 cm (1.26 in) using bottom O-ring.



mmr2009-133-003_b

*DEFLECTION SETTING*
*1. Bottom O-ring*

5. Place upper O-ring to 0 kgf (0 lbf).
6. Position the tensiometer on track, halfway between runner ends.
7. Push the tensiometer downwards until bottom O-ring (deflection) is aligned with the bottom of slider shoe.

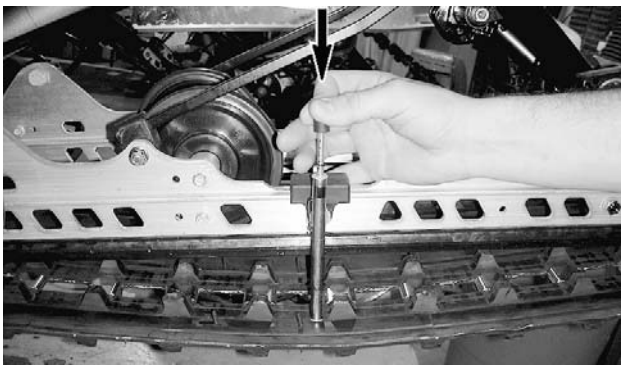
mmr2009-133-001_a

*TYPICAL*

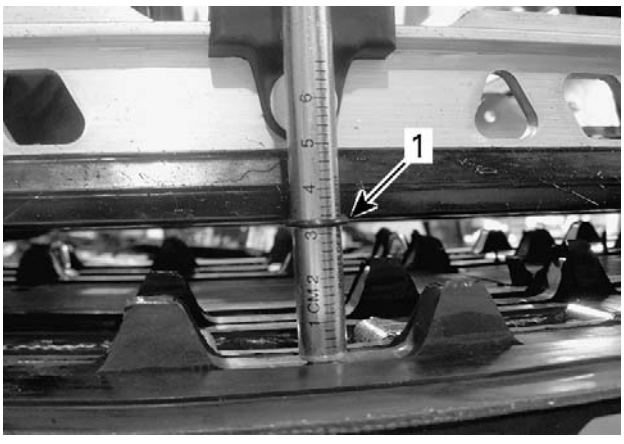

mmr2009-133-002_a

*1. Deflection O-ring aligned with slider shoe*

8. Read load recorded by the upper O-ring on the tensiometer.




*LOAD READING*
*1. Upper O-ring*

Load reading must be as per the following table.

| TRACK ADJUSTMENT SPECIFICATION | |
|---|---|
| Track deflection setting | 3.2 cm (1.26 in) |
| Track load reading | 6.0 kgf to 8.5 kgf (13 lbf to 19 lbf) |

9. If load reading is not in accordance with the specification, adjust track tension. Refer to *ADJUSTING THE TRACK TENSION*.

**NOTICE** Too much tension will result in power loss and excessive stresses on suspension components.

## Adjusting the Track Tension

1. Lift rear of vehicle and support it off the ground.
2. Loosen rear axle
   2.1 Loosen nut on 2 wheel idler system
   2.2 Loosen screw on 3 or 4 wheel idler system
3. Tighten or loosen both adjustment screws to increase or decrease track tension.

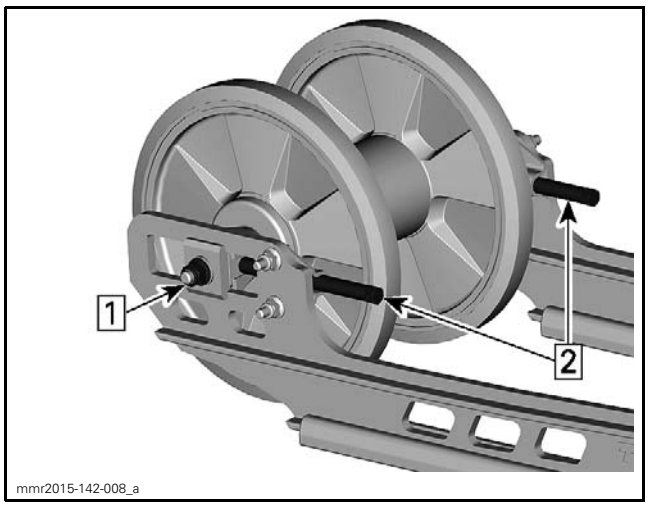


*TYPICAL - 2 IDLER WHEELS MODELS*
*Step 1: Loosen axle nut*
*Step 2: Tighten or loosen adjustment screws*

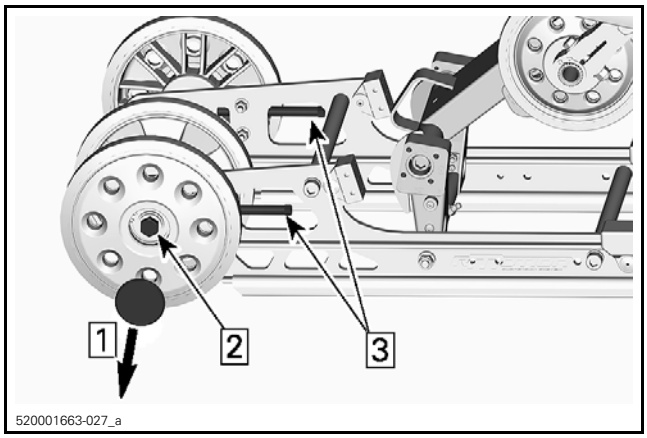


*TYPICAL - 3 OR 4 IDLER WHEELS MODELS*
*Step 1: Remove caps*
*Step 2: Loosen one the axle screw*
*Step 3: Tighten or loosen adjustment screws*

4. Verify track tension, refer to *VERIFYING THE TRACK TENSION*.
5. Ensure track is properly aligned, refer to *ALIGNING THE TRACK*.

## Aligning the Track

**⚠ WARNING**

**Before checking track alignment, ensure that the track is free of all particles which could be thrown out while track is rotating. Keep hands, tools, feet and clothing clear of track. Ensure no one is standing in close proximity to the vehicle. Never rotate at high speed.**

1. Lift rear of vehicle and support it off the ground.
2. Start engine and accelerate slightly so that track barely turns. This must be done in a short period of time (10 seconds).
3. Check that the track is well centered; equal distance on both sides between edges of track guides and slider shoes.

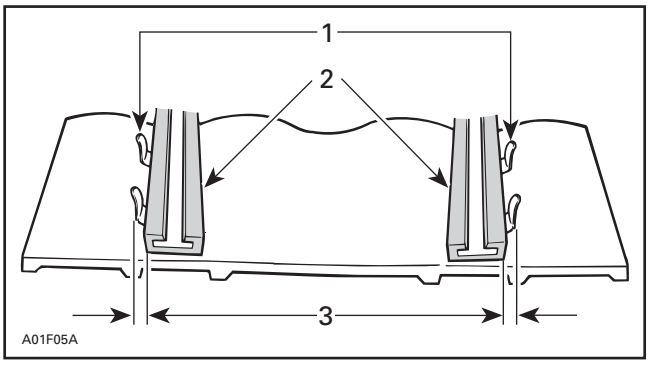


*1. Guides*
*2. Slider shoes*
*3. Equal distance*

4. To correct track alignment:
   4.1 Stop engine.
   4.2 Loosen rear wheel nut.
   4.3 Tighten adjustment screw on side where the slider shoe is the farthest from the track insert guides.

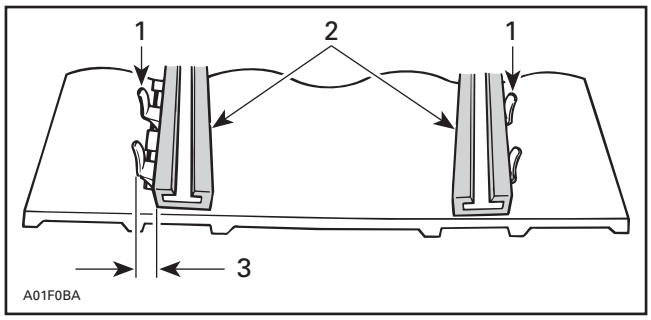


*1. Guides*
*2. Slider shoes*
*3. Tighten on this side*

5. Restart engine.
6. Rotate track slowly and recheck alignment.
7. If satisfactory track alignment is achieved tighten idler wheels axle nut to specification:

| TIGHTENING TORQUE | |
|---|---|
| Rear idler wheel retaining screws **(3 and 4 idler wheels system)** | 48 N•m ± 6 N•m (35 lbf•ft ± 4 lbf•ft) |
| Rear idler wheel retaining nut and screw **(2 idler wheels system)** | 24.5 N•m ± 3.5 N•m (18 lbf•ft ± 3 lbf•ft) |

# PROCEDURES

## TRACK

### Replacing a Track Cleat

Raise rear of vehicle off the ground.

Lift snow guard.

Rotate track to expose a cleat to be replaced.

Remove cleat from track using plastic hammer and a big screwdriver.

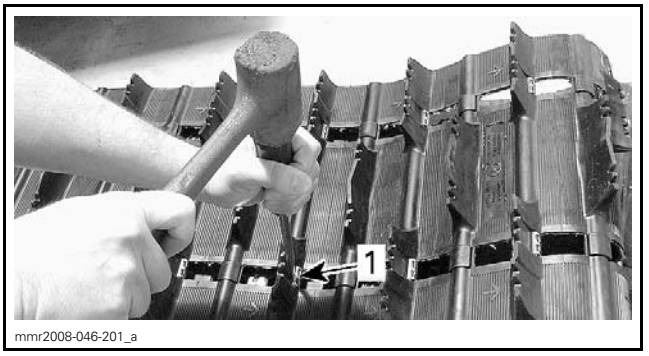


*TYPICAL*
*1. Cleat*

Place new cleat in position on the track.

Secure cleat with the cleat installer.

| REQUIRED TOOL | |
|---|---|
| TRACK CLEAT INSTALLER (P/N 529 036 044) |  |

Bend cleat and push tabs into rubber.

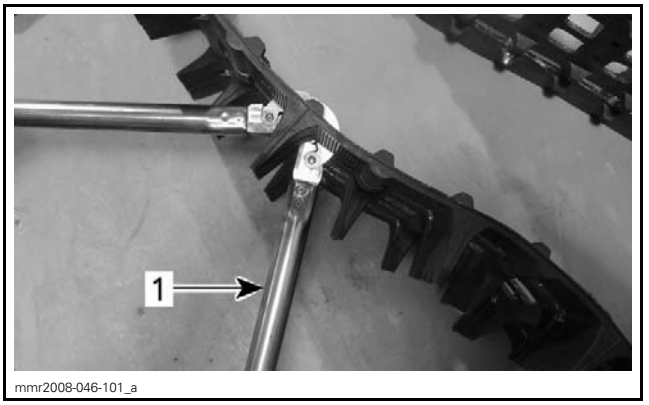


*TYPICAL*
*1. Narrow-cleat installer*

Reopen narrow-cleat installer.

Position cleat tabs on open end of tool.

Squeeze tabs until they are indented in rubber.

### Removing the Track

Remove rear suspension from vehicle. Refer to *REAR SUSPENSION*.

Remove drive axle. Refer to *DRIVE AXLE* subsection.

Remove track.

### Installing the Track

Reverse the removal procedure.

NOTE: When installing the track, respect rotation direction indicated by an arrow on track thread.

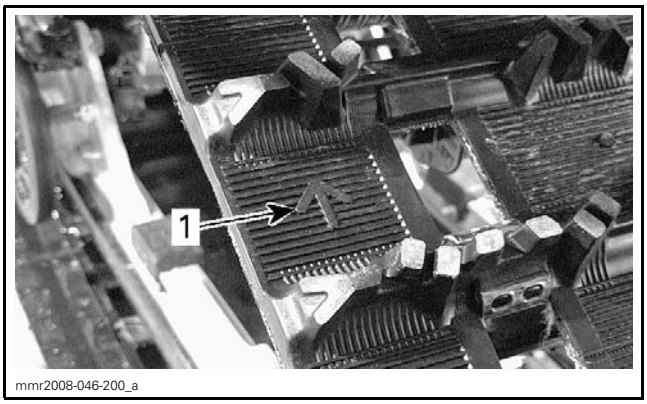


*1. Arrow pointing forwards*

## Adjusting and aligning the Track

Refer to *MAINTENANCE* in this subsection.

# SUSPENSION ADJUSTMENTS

## GENERAL

**NOTICE** Whenever adjusting rear suspension, check track tension and adjust if necessary.

## ADJUSTMENT

Choice of suspension adjustments vary with vehicle load, personal preference, riding speed and terrain condition.

The best way to set up the suspension, is to start from factory settings, then customize each adjustment one at a time.

Front and rear adjustments are interrelated. It may be necessary to readjust the rear shock absorbers after adjusting front shock absorbers for instance.

Test run the vehicle under the same conditions; trail, speed, load, etc. Change one adjustment and retest. Proceed methodically until you are satisfied.

Following are guidelines to fine-tune suspension.

### STOPPER STRAP

Stopper strap length has an effect on the amount of weight the center spring has to carry especially during acceleration, therefore on the front end uplift.

Stopper strap length also has an effect on center spring travel.

| ACTION | RESULT |
|---|---|
| Increasing stopper strap length | Lighter ski pressure under acceleration |
| | More center spring travel |
| | More bump absorption capability |
| Decreasing stopper strap length | Heavier ski pressure under acceleration |
| | Less center spring travel |
| | Less bump absorption capability |

NOTE: Stopper strap could be set to position 1, 2, 3, 4 and 5. Below are illustrations for position 1, 2, 3. Smaller numbers correspond to a longer strap setting.

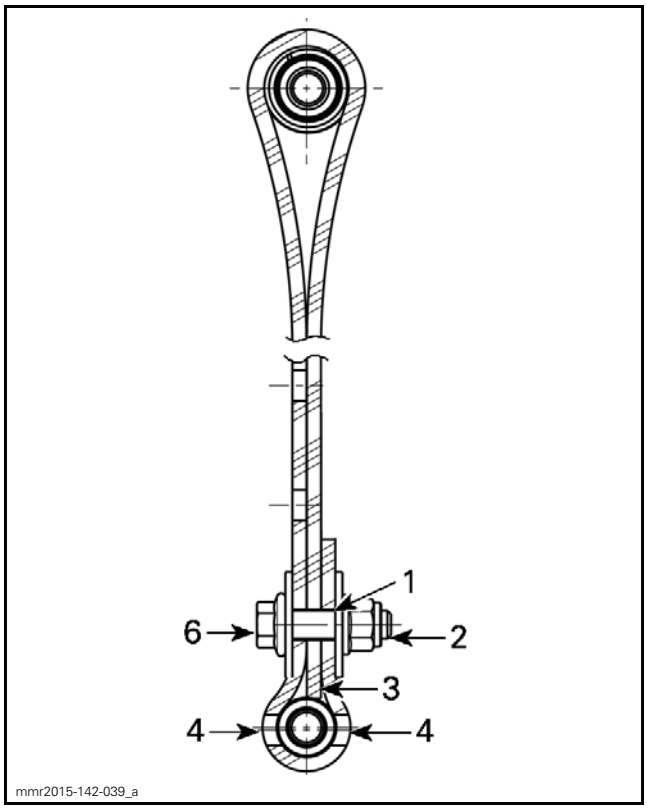


*STOPPER STRAP POSITION 1 (1ST HOLE, LONGEST)*
1. *1st hole from end*
2. *Towards rear*
3. *Tip of strap touching strap axis*
4. *Two holes left open between screw head and nut*
5. *Towards front*

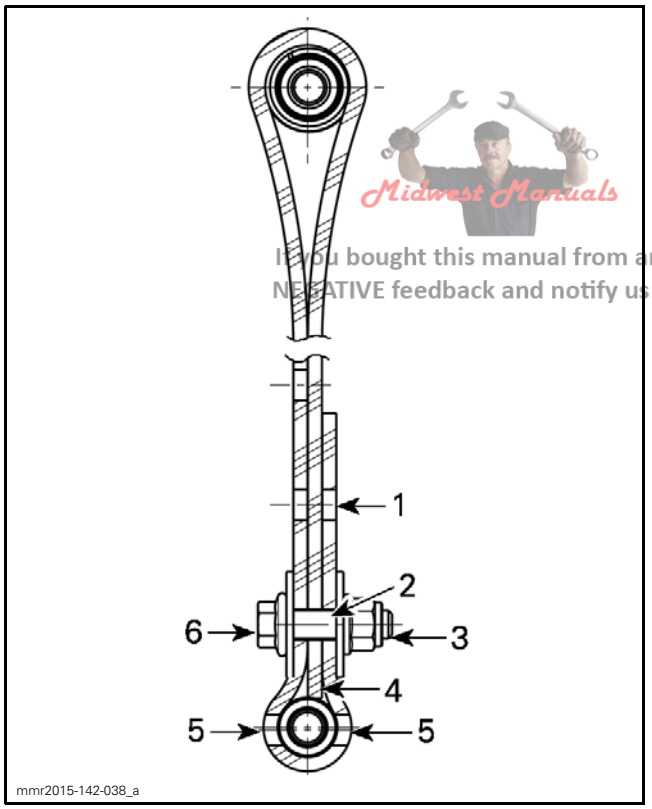


*STOPPER STRAP POSITION 2 (2ND HOLE)*
1. *Free hole*
2. *2nd hole from end*
3. *Towards rear*
4. *Tip of strap touching strap axis*
5. *Two holes left open between screw head and nut*
6. *Towards front*

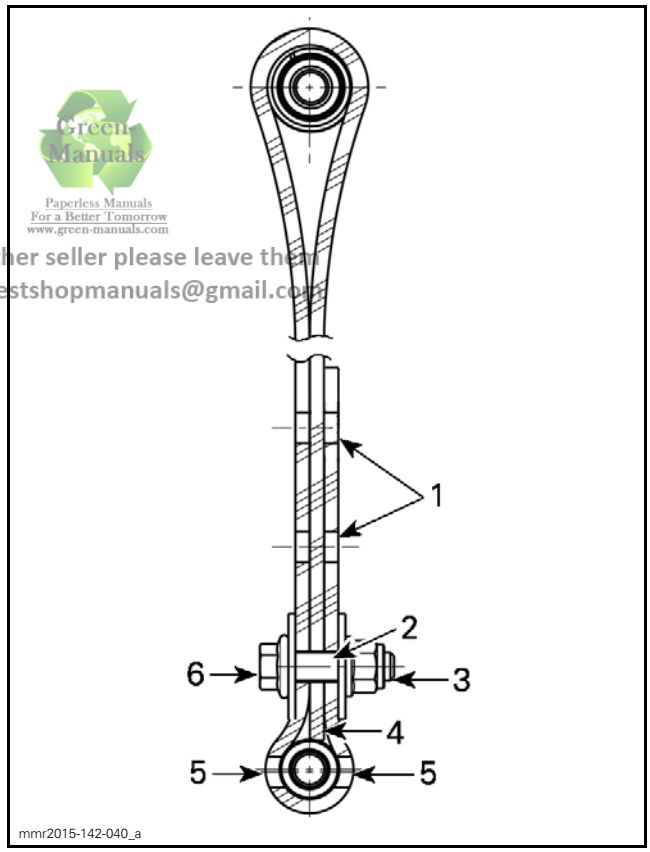


*STOPPER STRAP POSITION 3 (3RD HOLE)*
1. *Free holes*
2. *3rd hole from end*
3. *Towards rear*
4. *Tip of strap touching strap axis*
5. *Two holes left open between screw head and nut*
6. *Towards front*

Midwest Manuals
Green Manuals
Paperless Manuals
For a Better Tomorrow
www.green-manuals.com
If you bought this manual from any other seller please leave them
NEGATIVE feedback and notify us at bestshopmanuals@gmail.com

NOTE: Always install stopper strap bolt as close as possible to the lower shaft.

When operating the snowmobile in deep snow or hill climbing, it may be necessary to vary stopper strap length and/or riding position, to change the angle at which the track rides on the snow. Operator's familiarity with the various adjustments as well as snow conditions will dictate the most efficient combination.

Generally, a longer stopper strap setting gives better performance on a flat landscape and a shorter setting will improve handling in steep hill climbing and deep snow conditions.

| STOPPER STRAP SETTING | |
|---|---|
| POSITION | USE |
| 1 | Not used |
| 2 | Boon docking:<br>– Better boon docking manoeuvrability<br>– Better bump absorption<br>– Better deep snow starts (forward and reverse) |

| STOPPER STRAP SETTING | |
|---|---|
| POSITION | USE |
| 3 | Factory setting: Best overall setting (General use) |
| 4 | Hill climb:<br>– Better track attack angle for hill climbing |
| 5 | Steep hill climb:<br>– Better track attack angle for hill climbing<br>– Less transfer<br>– Lower ride height |

# SPRING PRELOAD

## Front Springs

Front springs preload has an effect on:
– front suspension firmness
– The steering behavior.

| ACTION | RESULT |
|---|---|
| Increasing preload | Firmer front suspension |
| | Higher front end |
| | More precise steering |
| | More bump absorption capability |
| Decreasing preload | Softer front suspension |
| | Lower front end |
| | Lighter steering |
| | Less bump absorption capability |

**⚠ WARNING**

**Adjust both springs to the same preload. Uneven adjustment can cause poor handling and loss of stability, and/or control, and increase the risk of an accident.**

### *Cam Type Adjuster*

Using the suspension adjustment tool (included in the vehicle tool kit), turn the cam to increase or decrease spring preload.

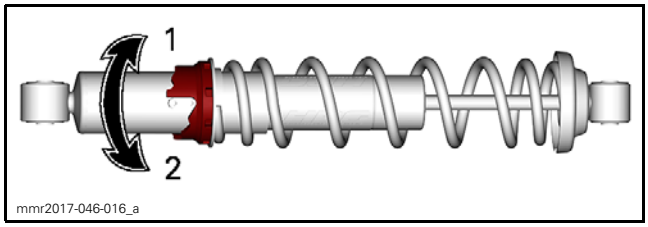


1. *Increase preload*
2. *Decrease preload*

### *Ring Type Adjuster*

Grab and turn the spring to increase or decrease spring preload.

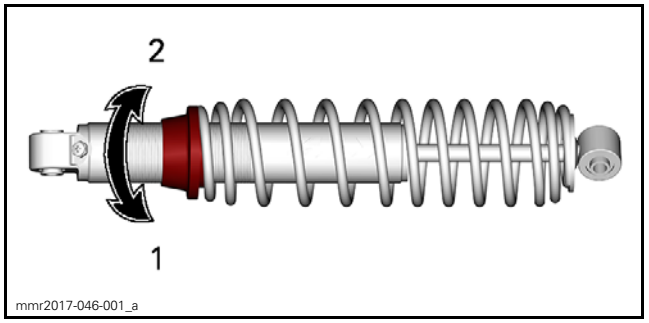


1. *Increase preload*
2. *Decrease preload*

## Center Spring

Center spring preload has an effect on steering effort, handling and bump absorption.

Also, since center spring preload adjustment puts more or less pressure on the front of the track, it has an effect on the performance in deep snow.

| ACTION | RESULT |
|---|---|
| Increasing preload | Lighter steering |
| | More bump absorption capability |
| | Better deep snow starts |
| | Better deep snow performance and handling |
| Decreasing preload | Heavier steering |
| | Less bump absorption capability |
| | Better trail handling |

### *Cam Type Adjuster*

Using the suspension adjustment tool (included in the vehicle tool kit), turn the cam to increase or decrease spring preload.

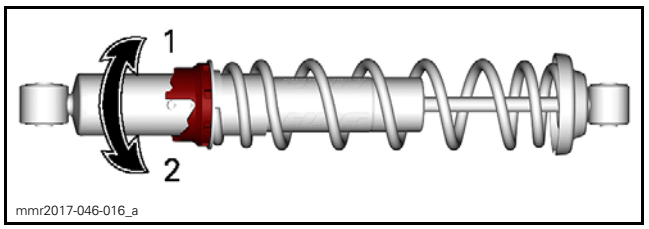


1. *Increase preload*
2. *Decrease preload*

### *Ring Type Adjuster*

Grab and turn the spring to increase or decrease spring preload.

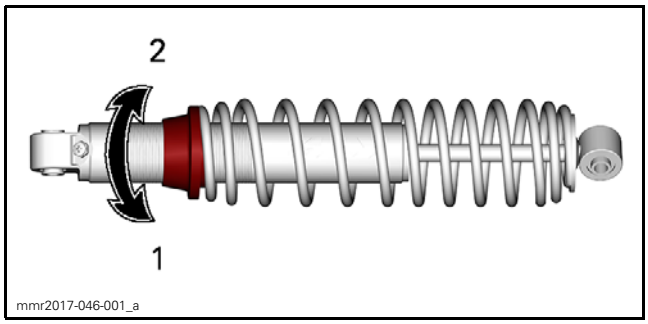


*1. Increase preload*
*2. Decrease preload*

## Rear Springs

Rear spring preload has an effect on comfort, ride height and load compensation.

Also, adjusting rear spring preload shifts more or less weight to the snowmobile front end. As a result, more or less weight is applied to the skis. This has an effect on performance in deep snow, steering effort and handling.

Slight suspension bottoming occurring under the worst riding conditions indicates a good choice of spring preload.

| ACTION | RESULT |
|---|---|
| Increasing preload | Firmer rear suspension |
| | Higher rear end |
| | More bump absorption capability |
| | Heavier steering |
| Decreasing preload | Softer rear suspension |
| | Lower rear end |
| | Less bump absorption capability |
| | Lighter steering |
| | Better deep snow performance and handling |

Refer to the following to determine if preload is correct.

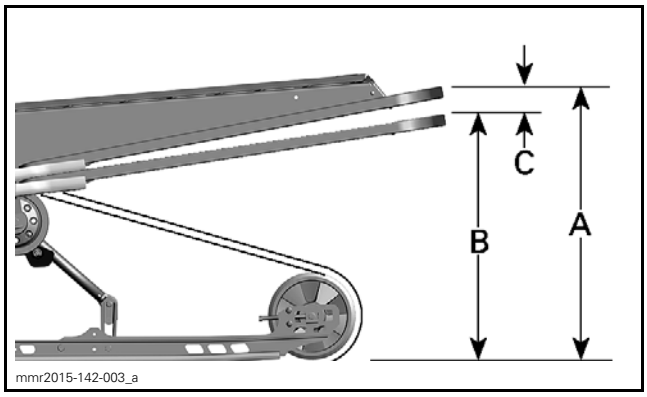


*PROPER ADJUSTMENT*
*A. Suspension fully extended*
*B. Suspension has collapsed with operator, passenger and load added*
*C. Distance between dimension "A" and "B", see table below*

| SC-5 / SC-5M / rMOTION | |
|---|---|
| "C" | WHAT TO DO |
| 50 mm to 75 mm (2 in to 3 in) | No adjustment required |
| More than 75 mm (3 in) | Adjusted too soft. Increase preload |
| Less than 50 mm (2 in) | Adjusted too firm. Decrease preload |

| SC-5U / cMOTION / tMOTION | |
|---|---|
| "C" | WHAT TO DO |
| 65 mm to 100 mm (2.5 in to 4 in) | No adjustment required |
| More than 100 mm (4 in) | Adjusted too soft. Increase preload |
| Less than 65 mm (2.5 in) | Adjusted too firm. Decrease preload |

If the specification is unattainable with the original springs, refer to the applicable *SPRING CHART* bulletin for other available springs.

**NOTICE** **To increase spring preload, always turn the left side adjustment cam in a clockwise direction, and the right side cam in a counterclockwise direction.**

**⚠ CAUTION** **Never set preload cams directly from position 5 to 1 or directly from position 1 to 5.**

The adjustment cams have 5 different settings, 1 being the softest.

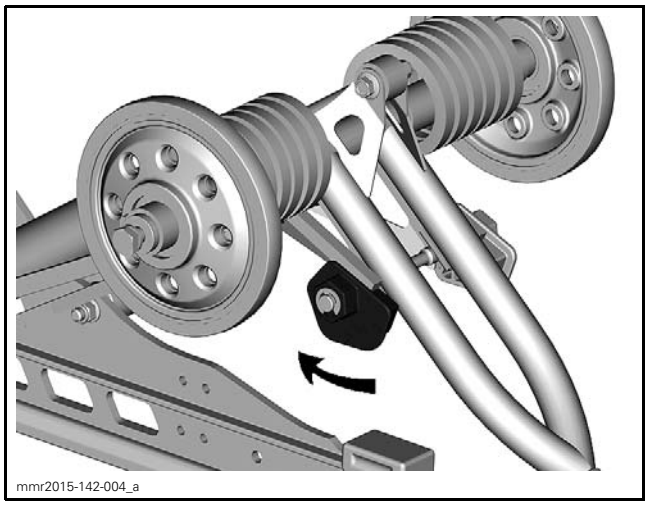


*TYPICAL - EXCEPT QUICK ADJUST SYSTEM*

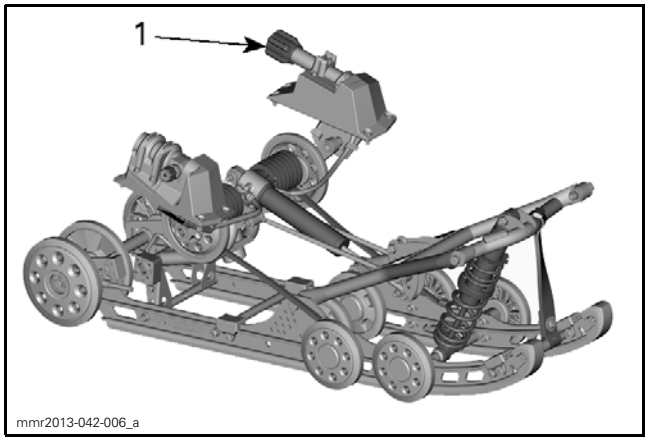


*rMOTION WITH QUICK ADJUST SYSTEM*
*1. LH side knob to adjust spring preload*

## Dampers

### Compression Damping (KYB PRO Series)

NOTE: Both low and high speed compression damping are adjusted simultaneously.

Low speed compression damping controls how the shock absorber reacts to a low suspension velocity (slow compression strokes, in most cases when riding at lower speeds).

High speed compression damping controls how the shock absorber reacts to a high suspension velocity (quick compression strokes, in most cases when riding at higher speeds).

| ACTION | RESULT |
|---|---|
| Increasing compression damping force | Firmer compression damping |
| Decreasing compression damping force | Softer compression damping |

To adjust, turn compression damping adjustment knob clockwise to increase compression damping force and counterclockwise to decrease compression damping force.

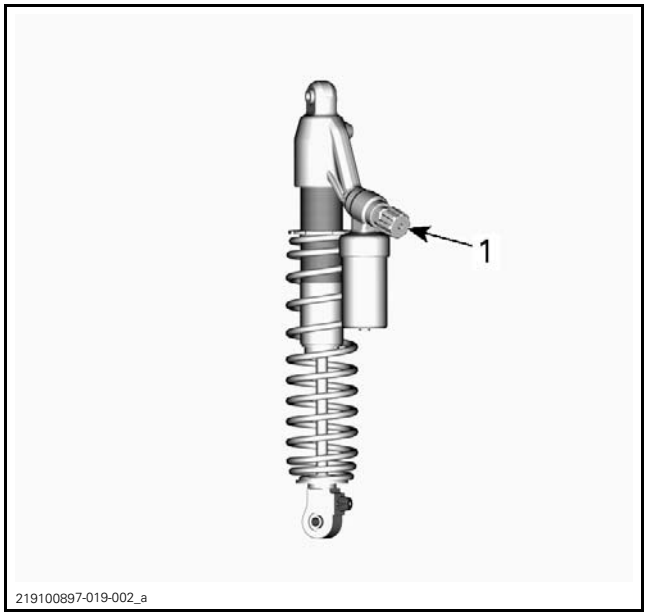


*TYPICAL - EXCEPT QUICK ADJUST SYSTEM*
*1. Compression damping adjustment knob*

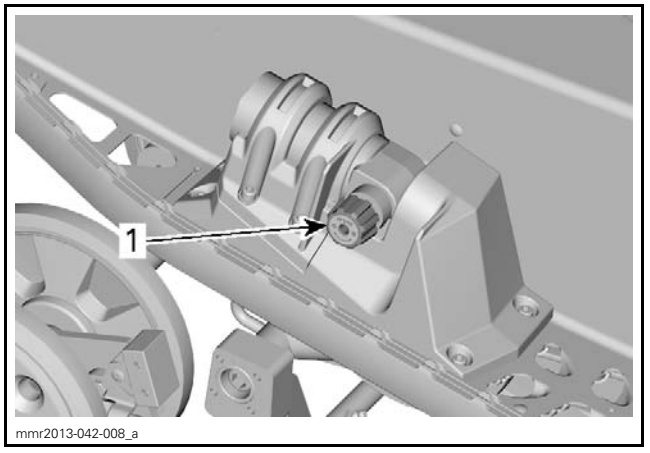


*rMOTION WITH QUICK ADJUST SYSTEM*
*1. Knob to adjust low/high speed compression damping*

### Rebound Damping (KYB PRO Series)

Rebound damping controls how the shock absorber restrains the extension stroke.

| ACTION | RESULT |
|---|---|
| Increasing rebound damping force | Firmer rebound damping (slower extension speed) |
| Decreasing rebound damping force | Softer rebound damping (faster extension speed) |

NOTE: In repetitive shorts small bumps (ripple), it is recommended to use a lower rebound damping setting.

To adjust, turn rebound adjustment knob clockwise to increase rebound damping force and counterclockwise to decrease rebound damping force.

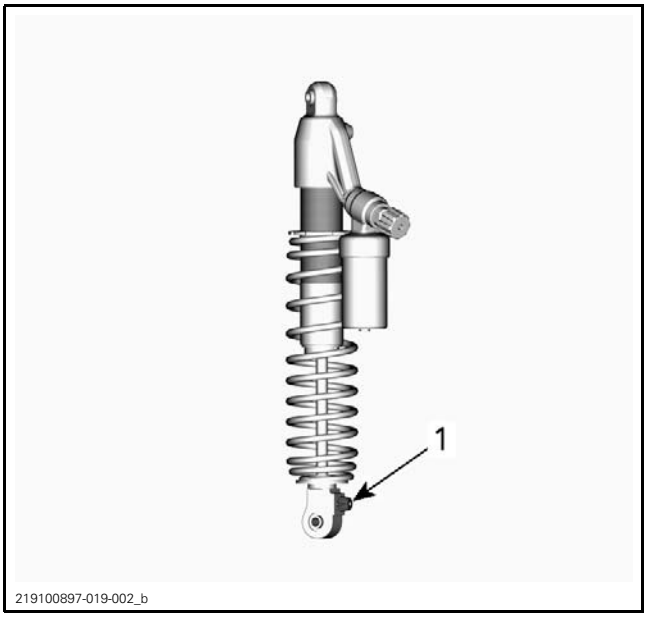


*TYPICAL - EXCEPT QUICK ADJUST SYSTEM*
1. *Rebound damping adjustment knob*

### Rear Shock Mounting Position

Two rear shock mounting positions are available: high performance and sport.

Factory setting is set to lowest mounting position (high performance) which will suit most operators riding preferences. The sport mounting hole adjustment allows for another range of softer settings, but all other rear suspension adjustments should be performed before changing the rear shock mounting position.

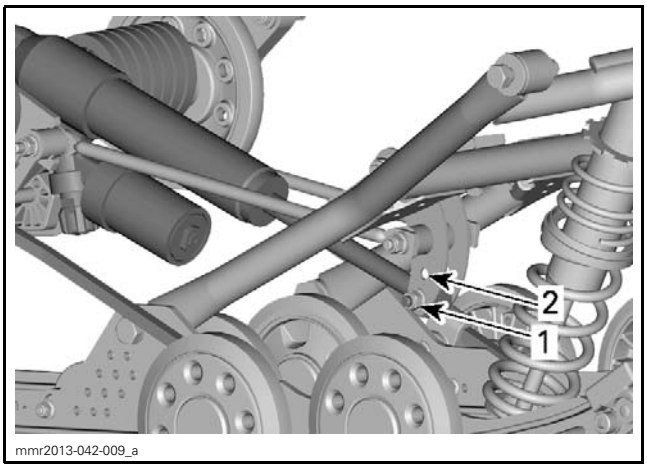


*REAR SHOCK MOUNTING POSITION*
1. *High performance position*
2. *Sport position*

## Coupling Blocks

Coupling blocks adjustment has an effect on vehicle handling during acceleration only.

NOTE: A high coupling block setting will reduce both comfort and transfer under acceleration.

To adjust, push on release button under cam and turn coupling block to the desired setting.

**⚠ WARNING**

**Both blocks must be set at the same position. Otherwise vehicle behavior may be unpredictable and suspension may become warped.**

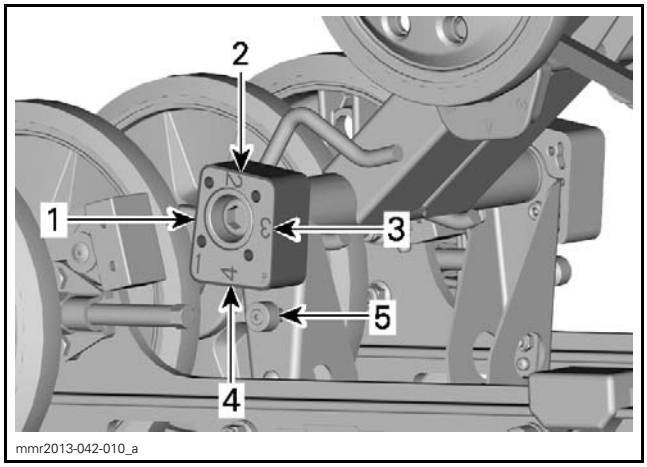


*COUPLING BLOCK — RIGHT SIDE VIEW*
*("R" — RIGHT EMBOSSED ON BLOCK)*
1. *Position 1 (minimum)*
2. *Position 2*
3. *Position 3*
4. *Position 4 (maximum)*
5. *Release button*

### Coupling Blocks Setting

| POSITION | USE |
|---|---|
| 1 | More ski lift during acceleration - and best comfort |
| 2 | Intermediate setting |
| 3 | Intermediate setting |
| 4 | Less ski lift during acceleration - and some comfort loss |

# FRONT SUSPENSION

## SERVICE TOOLS

| Description | Part Number | Page |
|---|---|---|
| BALL JOINT EXTRACTOR | 529 035 827 | 519 |
| BALL JOINT INSTALLER SUPPORT | 529 036 398 | 522 |
| BALL JOINT INSTALLER | 529 036 399 | 522 |
| BALL JOINT REMOVER SUPPORT | 529 036 400 | 522 |
| SPRING COMPRESSOR | 529 036 184 | 518 |
| SUSPENSION ARM SUPPORT | 529 035 637 | 520 |

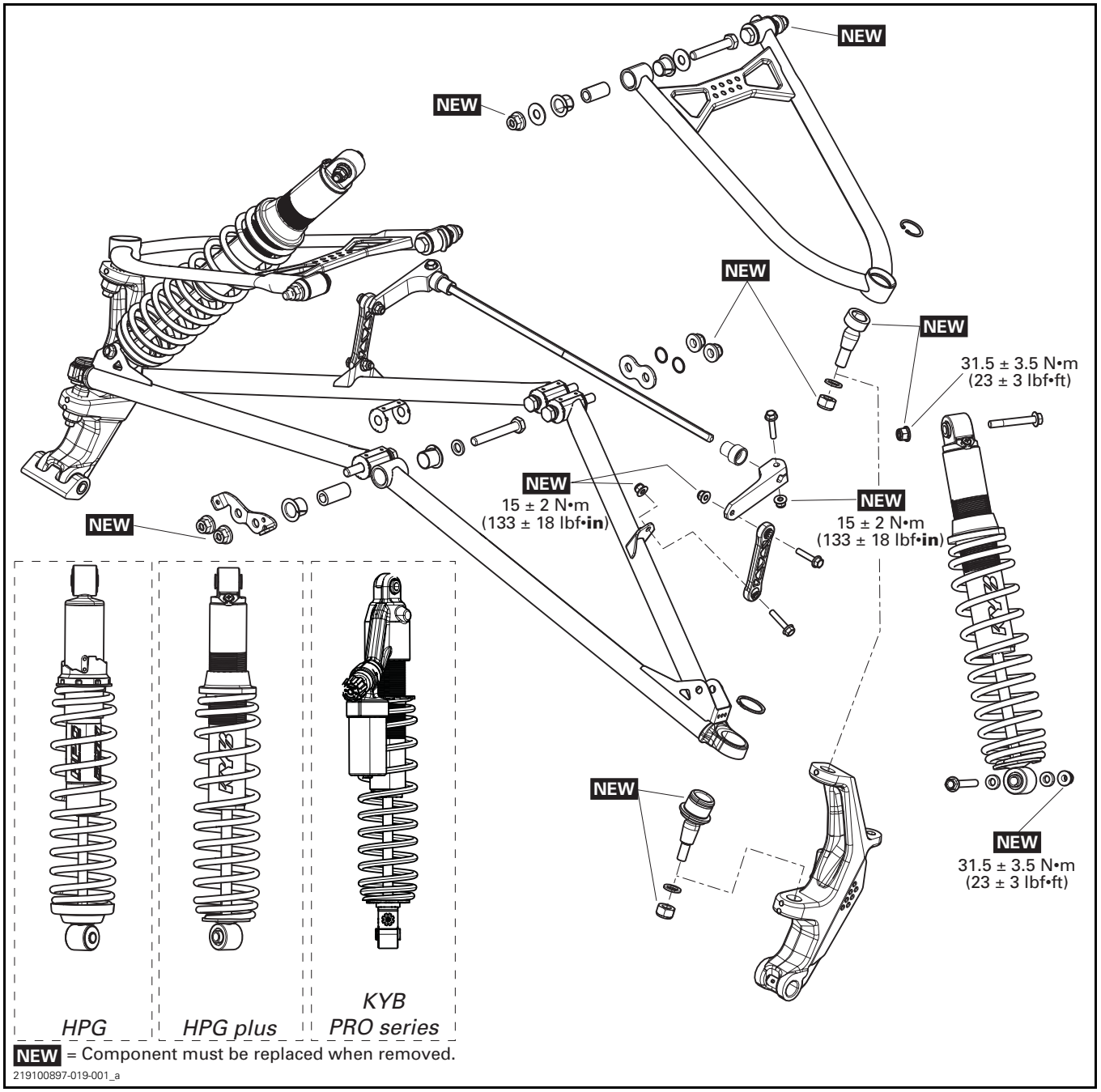

# GENERAL

The procedure explained below is the same for the RH and LH sides unless otherwise noted.

During assembly/installation, use torque values and service products as in the exploded view.

Clean threads before applying a threadlocker. Refer to *SELF-LOCKING FASTENERS* and *LOCTITE APPLICATION* at the beginning of this manual for complete procedure.

**⚠ WARNING**

**Torque wrench tightening specifications must be strictly adhered to.**
**Locking devices (e.g.: locking tabs, elastic stop nuts, cotter pins, etc.) must be replaced with new ones.**

Check for loose, bent, worn out, rusted or otherwise damaged components. Replace the faulty components.

# ADJUSTMENT

## SPRINGS

Front spring preload has an effect on front suspension firmness.

Front spring preload also has an effect on the steering behavior.

| ACTION | RESULT |
|---|---|
| Increasing preload | Firmer front suspension |
| | Higher front end |
| | More precise steering |
| | More bump absorption capability |
| Decreasing preload | Softer front suspension |
| | Lower front end |
| | Lighter steering |
| | Less bump absorption capability |

**⚠ WARNING**

**Adjust both springs to the same preload. Uneven adjustment can cause poor handling and loss of stability, and/or control, and increase the risk of an accident.**

### Spring Preload Adjustment

#### Cam Type Adjustment

Using the suspension adjustment tool (included in the vehicle tool kit), turn the cam to increase or decrease spring preload.

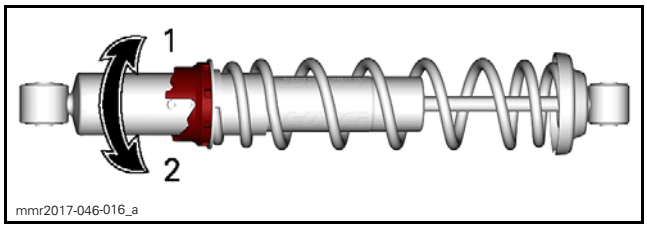


*1. Increase preload*
*2. Decrease preload*

#### Ring Type Adjustment

Grab and turn the spring to increase or decrease spring preload.

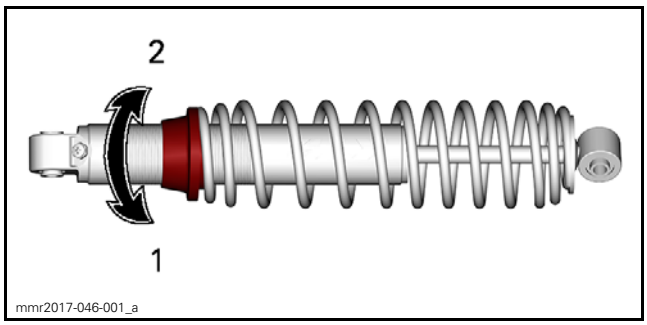


*1. Increase preload*
*2. Decrease preload*

## DAMPERS

### Compression Damping (KYB PRO Series)

**NOTE:** Both low and high speed compression damping are adjusted simultaneously.

Low speed compression damping controls how the shock absorber reacts to a low suspension velocity (slow compression strokes, in most cases when riding at lower speeds).

High speed compression damping controls how the shock absorber reacts to a high suspension velocity (quick compression strokes, in most cases when riding at higher speeds).

| ACTION | RESULT |
|---|---|
| Increasing compression damping force | Firmer compression damping |
| Decreasing compression damping force | Softer compression damping |

To adjust, turn compression damping adjustment knob clockwise to increase compression damping force and counterclockwise to decrease compression damping force.

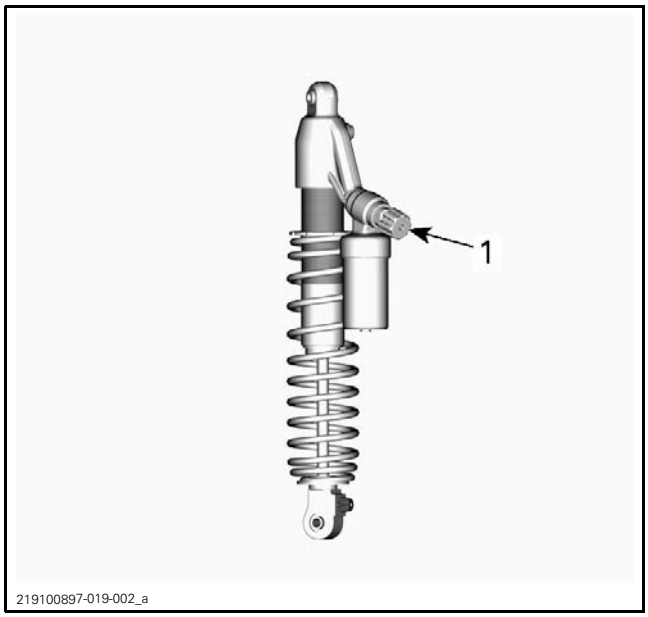


*1. Compression damping adjustment knob*

### Rebound Damping (KYB PRO Series)

Rebound damping controls how the shock absorber restrains the extension stroke.

| ACTION | RESULT |
|---|---|
| Increasing rebound damping force | Firmer rebound damping (slower extension speed) |
| Decreasing rebound damping force | Softer rebound damping (faster extension speed) |

NOTE: In repetitive shorts small bumps (ripple), it is recommended to use a lower rebound damping setting.

To adjust, turn rebound adjustment knob clockwise to increase rebound damping force and counterclockwise to decrease rebound damping force.

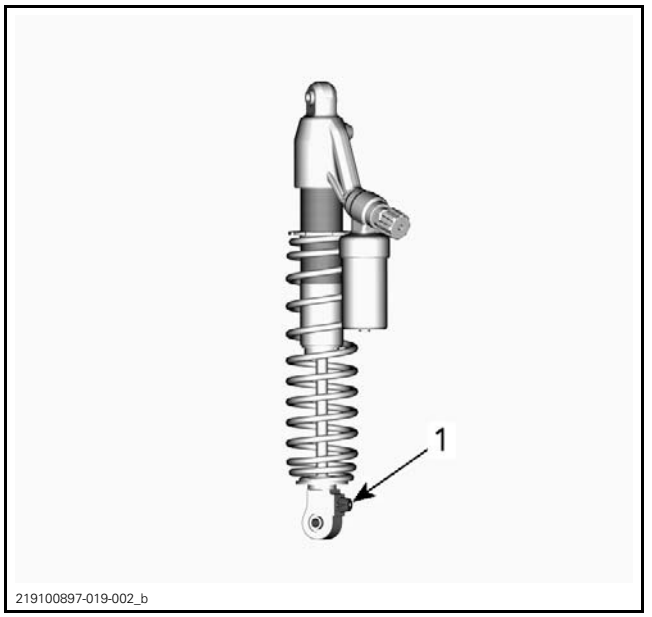


*1. Rebound damping adjustment knob*

# PROCEDURES

## SHOCK ABSORBER

### Removing the Shock Absorber

1. Remove the side panel. Refer to *BODY* subsection.
2. Lift the front of vehicle until skis are off the ground.
3. Remove the shock absorber upper bolt.

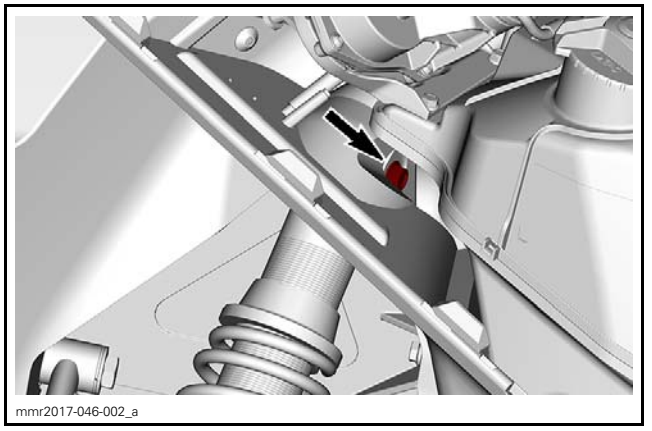


4. Remove the shock absorber lower bolt, nut, and spacers.

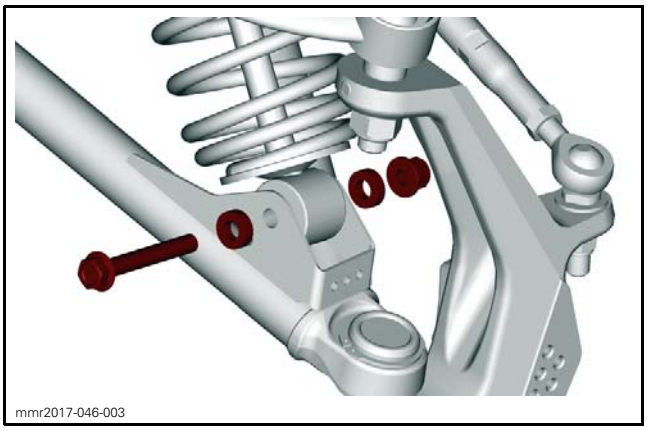
mmr2017-046-003

5. Remove the shock absorber.

### Inspecting the Shock Absorber

Refer to *REAR SUSPENSION (RMOTION)* subsection.

### Installing the Shock Absorber

For installation, reverse the removal procedure, however, pay attention to the following.

Install upper bolt first while shock absorber lower mount is not engaged into the bracket.

Install shock absorber with body up and valve (if equipped) towards outside.

Make sure to install both of the lower spacers.

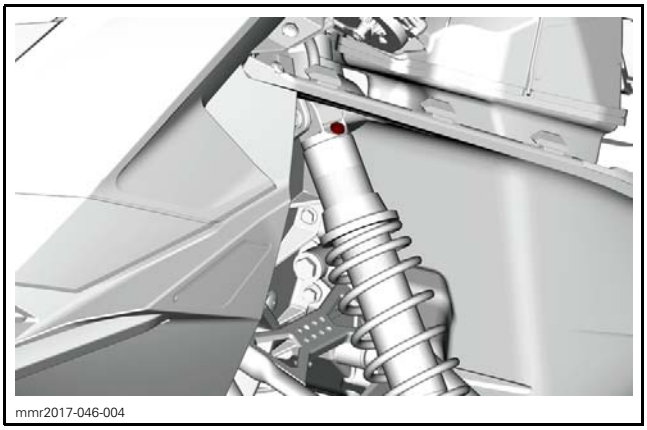
mmr2017-046-004

| TIGHTENING TORQUE | |
|---|---|
| Front shock absorber retaining nuts | 31.5 N•m ± 3.5 N•m (23 lbf•ft ± 3 lbf•ft) |

## SPRING

### Removing the Spring

1. Secure the SPRING COMPRESSOR (P/N 529 036 184) in a vise.

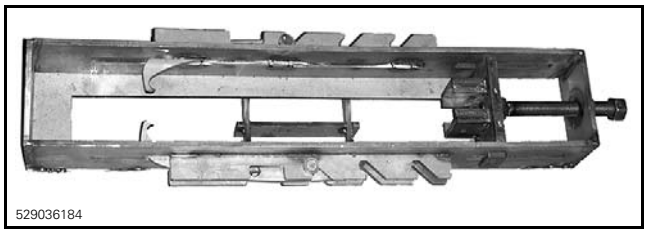
529036184

*SPRING COMPRESSOR*

2. Position the shock absorber in the tool and install the spring compressor hooks.

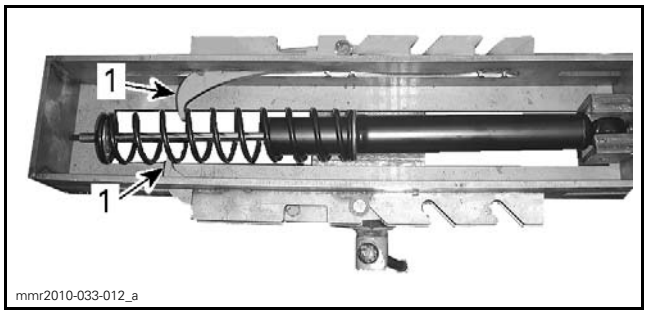

mmr2010-033-012_a

*TYPICAL*
*1. Spring compressor hooks*

3. Tighten the spring compressor tool screw until the spring is sufficiently compressed to remove spring stopper.
4. Release the spring compressor tool screw.
5. Remove spring from shock absorber.

### Inspecting the Spring

Inspect spring for apparent damage, any defect such as scratches or rust can affect the spring durability.

When the adjustment is at the lowest preload, ensure that adjustment cam and spring stopper are not loose. They must be under spring pressure. Otherwise, the spring stopper might fall off.

### Installing the Spring

For installation, reverse the removal procedure.

## UPPER SUSPENSION ARM

### Inspecting the Upper Suspension Arm

1. Check suspension arm for distortion or damage. Replace if necessary.
2. Lift the front of vehicle until skis are off the ground.
3. Move suspension arm from side to side.
4. Lower vehicle to the ground.
5. Move suspension up and down.
6. There should be no noticeable looseness. Replace bushings and/or sleeves if necessary.

NOTE: A play of 2 mm (.079 in) is acceptable when the suspension arm is moved forward and backward.

7. Check sleeves inside suspension arm attachments for wear or damage.

## Removing the Upper Suspension Arm

1. Lift the front of vehicle until skis are off the ground.
2. Remove muffler and tuned pipe. Refer to *EXHAUST SYSTEM* subsection.
3. Remove shock absorber. See procedure in *REMOVING THE SHOCK ABSORBER* in this subsection.
4. Remove the upper suspension arm bolts.

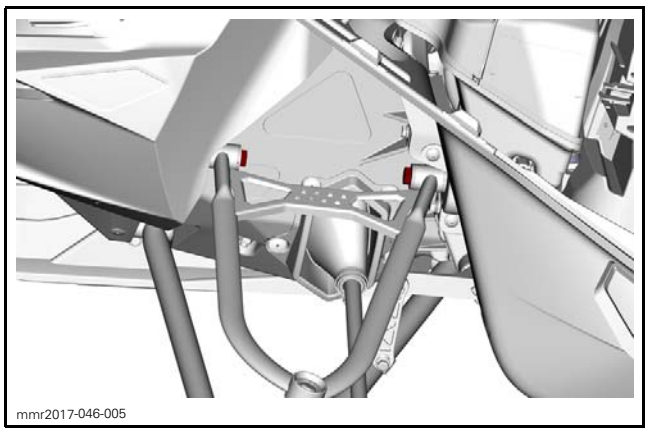
mmr2017-046-005

5. Detach ball joint from ski leg as follows.
   5.1 Remove nut securing ball joint to ski leg.

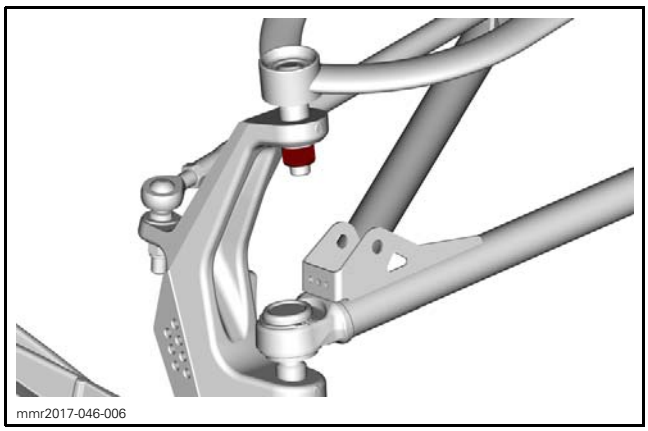
mmr2017-046-006

   5.2 Use the extractor to detach ball joint from ski leg.

| REQUIRED TOOL | |
|---|---|
| BALL JOINT EXTRACTOR (P/N 529 035 827) |  |

6. Remove upper suspension arm.

## Installing the Upper Suspension Arm

The installation is the reverse of the removal procedure. However, pay attention to the following.

**NOTICE** **Make sure not to invert LH and RH arm.**

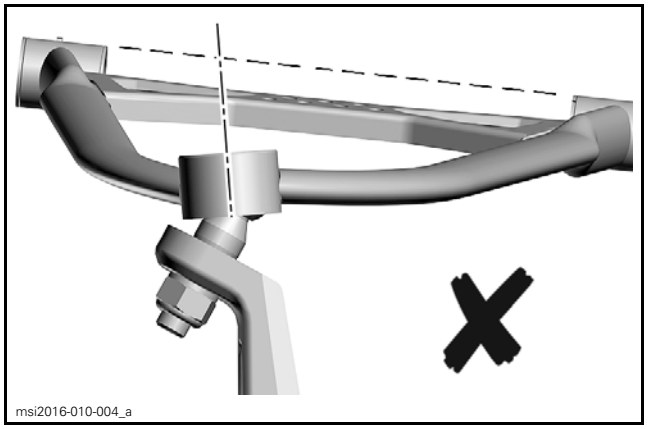
msi2016-010-004_a

*RH UPPER ARM INSTALLED ON LH SIDE*

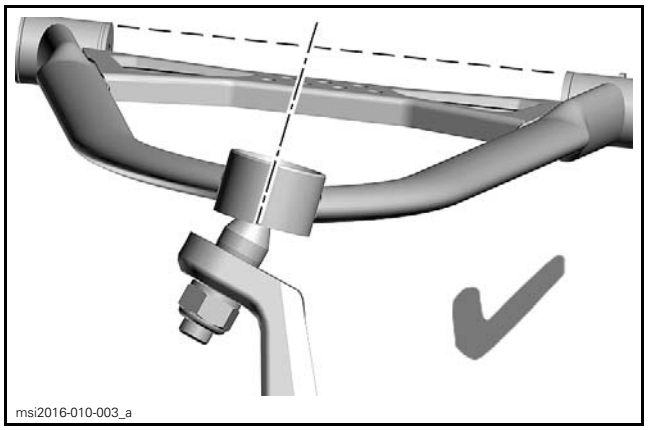
msi2016-010-003_a

*LH UPPER ARM INSTALLED ON LH SIDE*

# UPPER BALL JOINT

## Inspecting the Upper Ball Joint

Check both upper ball joints for damage, pitting, looseness and roughness. If so, replace with a new one.

## Removing the Upper Ball Joint

1. Remove the *UPPER SUSPENSION ARM*, see procedure in this subsection.
2. Remove circlip securing ball joint to suspension arm.




3. Press ball joint out of the suspension arm.

| REQUIRED TOOLS | |
|---|---|
| Shop press | |
| SUSPENSION ARM SUPPORT (P/N 529 035 637) |  |
| Suitable socket | |

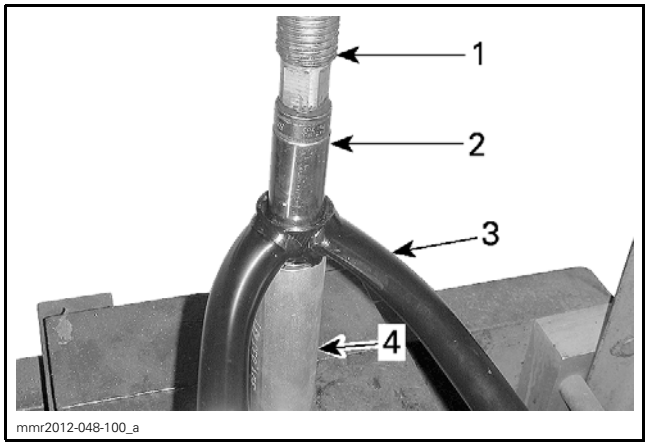


*TYPICAL*
*1. Press rod*
*2. Socket*
*3. Suspension arm*
*4. Suspension arm support*

## Installing the Upper Ball Joint

The installation is the reverse of the removal procedure. However, pay attention to the following.

1. Press ball joint into the suspension arm.

| REQUIRED TOOLS | |
|---|---|
| Shop press | |
| SUSPENSION ARM SUPPORT (P/N 529 035 637) |  |
| Suitable socket | |

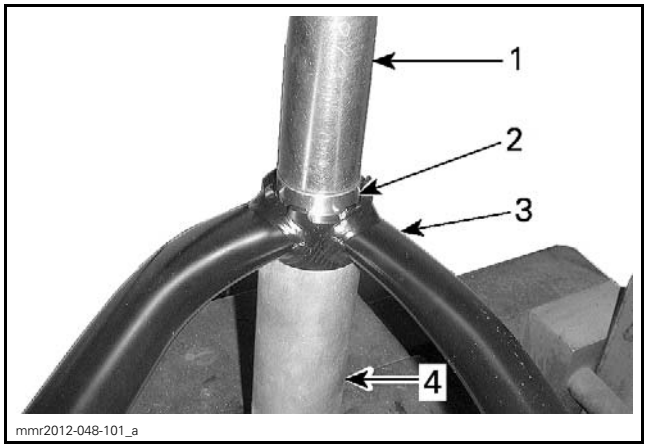


*TYPICAL*
*1. Socket*
*2. Ball joint*
*3. Suspension arm*
*4. Suspension arm support (P/N 529 035 637)*

2. Reinstall the circlip. If it seems loose, replace it with a new one.

# LOWER SUSPENSION ARM

## Inspecting the Lower Suspension Arm

1. Check suspension arm for distortion or damage. Replace if necessary.
2. Lift the front of vehicle until skis are off the ground.
3. Detach shock absorber and stabilizer bar link from lower suspension arm.
4. Move suspension arm from side to side.
5. Lower vehicle to the ground.
6. Move suspension up and down.
7. There should be no noticeable loose. Replace bushings and/or sleeves if necessary.

**NOTE:** A play of 2 mm (.079 in) is acceptable when the suspension arm is moved forward and backward.

8. Check sleeves inside suspension arm attachments for wear or damage.

## Removing the Lower Suspension Arm

1. Lift the front of vehicle until skis are off the ground.

2. Remove the tune pipe. Refer to *EXHAUST SYSTEM* subsection.
3. Remove shock absorber lower bolt.
4. Detach stabilizer bar link from lower suspension arm. Refer to *STABILIZER BAR* further in this subsection.
5. Remove lower ball joint nut.

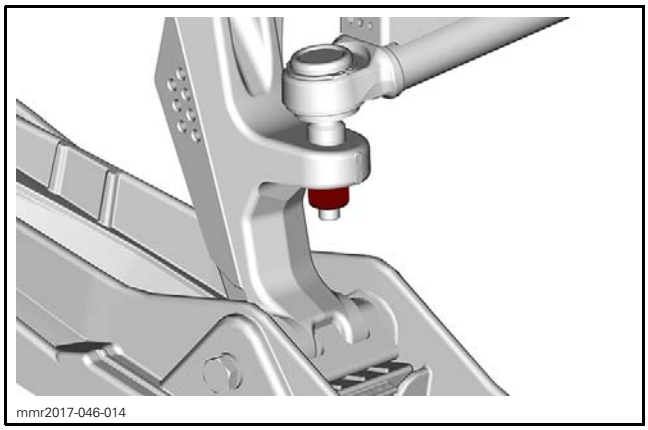
mmr2017-046-014

6. Using a suitable ball joint remover, detach lower ball joint from ski leg.
7. Remove suspension arm screws from inside the vehicle.

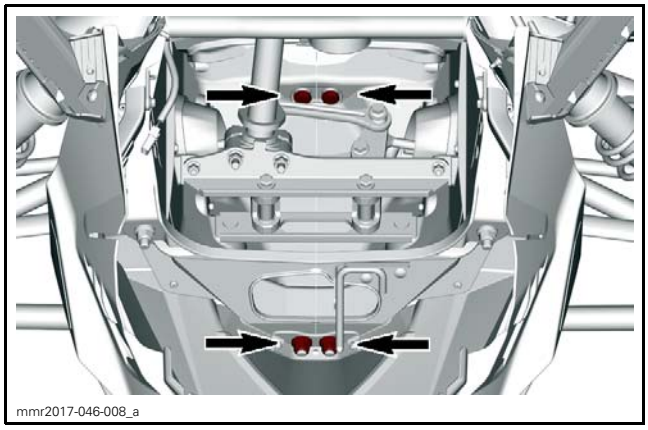
mmr2017-046-008_a

8. Remove lower suspension arm from vehicle.

### Installing the Lower Suspension Arm

The installation is the reverse of the removal procedure. However, pay attention to the following.

1. Install a wear plate over bushings.
2. Position the wear plate on top.
3. Fold all tabs against bushings.

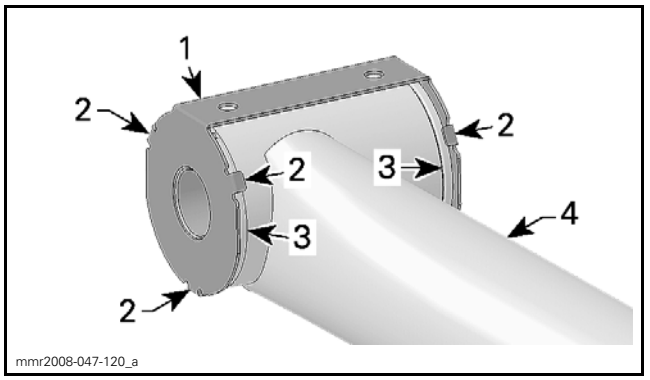

mmr2008-047-120_a

*1. Wear plate*
*2. Wear plate tabs*
*3. Bushings*
*4. Lower suspension arm*

Install all other removed parts.

## LOWER BALL JOINT

NOTE: The MX Z / Renegade lower ball joint is different from the Summit / Freeride lower ball joint.

### Inspecting the Lower Ball Joint

Inspect ball joint end for damage. Ensure it's moving freely, a 0.3 mm (.012 in) axial play is acceptable. Replace ball joints as required.

### Removing the Lower Ball Joint

1. Remove the *LOWER SUSPENSION ARM*, see procedure in this subsection.
2. Remove circlip securing ball joint to suspension arm.

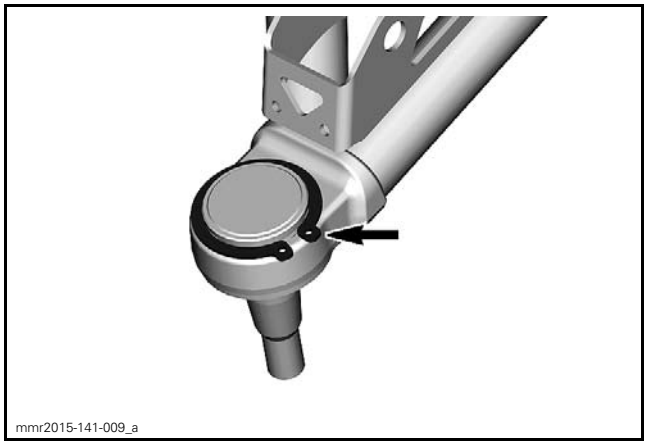
mmr2015-141-009_a

3. Use a shop press and the specified tools to press the ball joint out of the lower suspension arm.

| REQUIRED TOOLS | |
|---|---|
| BALL JOINT REMOVER SUPPORT (P/N 529 036 400) |  |
| Suitable box | |

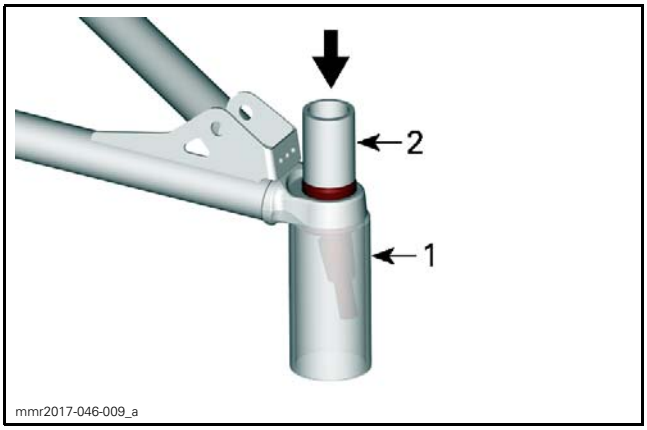


1. *Ball joint remover support*
2. *Suitable box*

## Installing the Lower Ball Joint

1. Use a press and the specified tools to press the ball joint into the suspension arm end.

| REQUIRED TOOLS | |
|---|---|
| BALL JOINT INSTALLER SUPPORT (P/N 529 036 398) |  |
| BALL JOINT INSTALLER (P/N 529 036 399) |  |

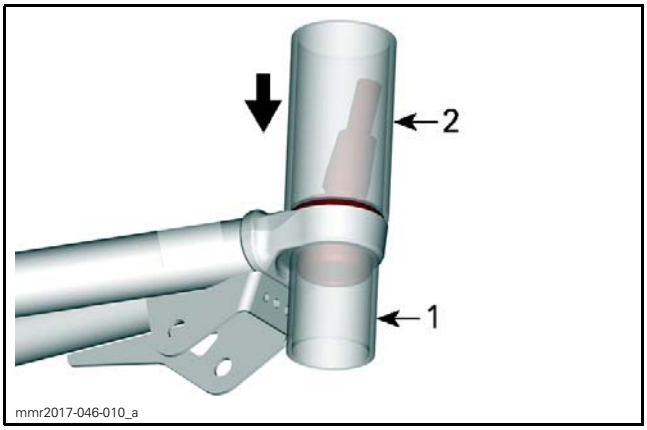


1. *Ball joint installer support*
2. *Ball joint installer*

2. Reinstall the circlip. If the circlip seems loose, replace it with a new one.
3. Install the *LOWER SUSPENSION ARM* on vehicle, see procedure in this subsection.

# SKI LEG

## Removing the Ski Leg

1. Remove ski from ski leg.
2. Detach tie-rod end from ski leg.

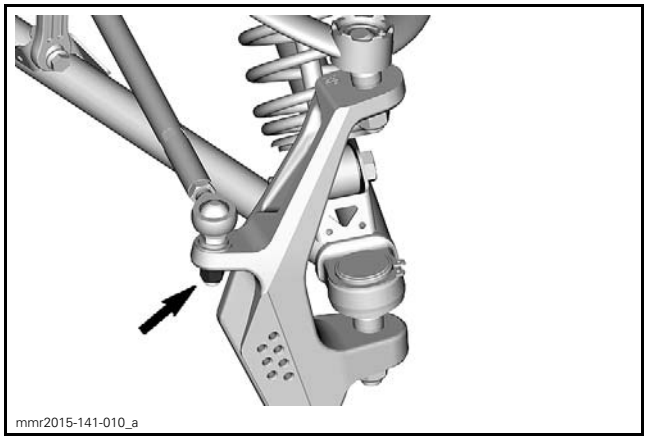


3. Remove upper and lower ball joints from ski leg. Refer to *UPPER BALL JOINT* and *LOWER BALL JOINT* in this subsection.

## Installing the Ski Leg

The installation is the reverse of the removal procedure.

# STABILIZER BAR

## Removing the Stabilizer Bar

1. Remove bolts and nuts securing stabilizer links to lower suspension arms.

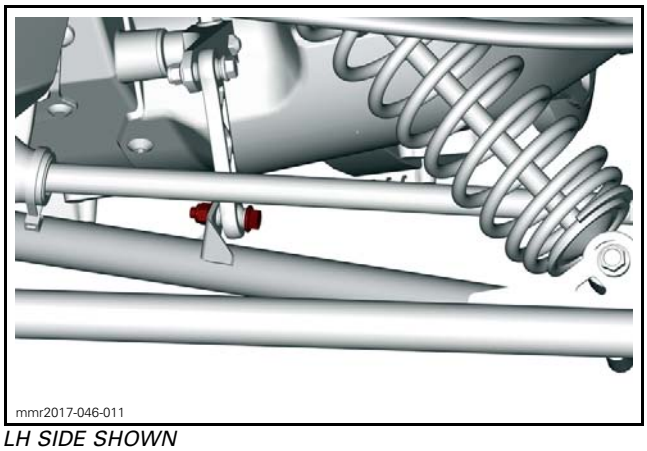


*LH SIDE SHOWN*

2. Remove stabilizer lever bolts and nuts.

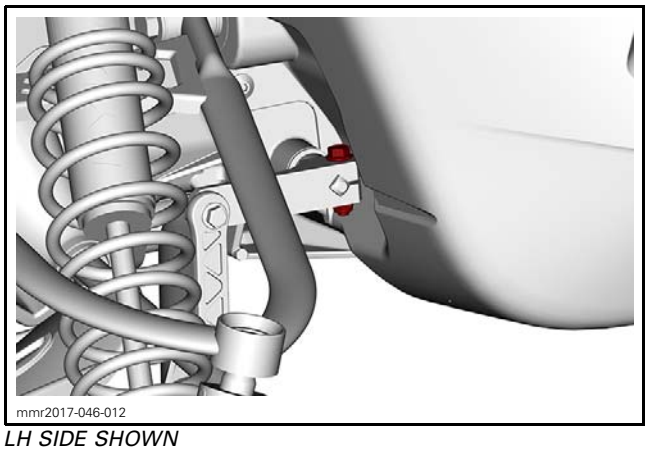


*LH SIDE SHOWN*

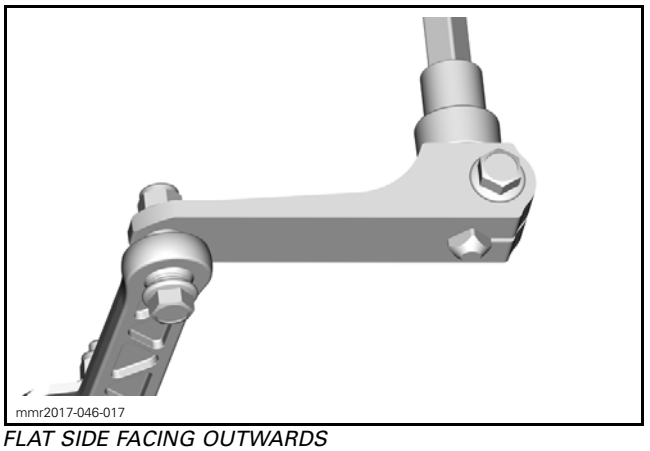


*FLAT SIDE FACING OUTWARDS*

3. Remove stabilizer levers and plastic bushings from stabilizer bar.
4. Slide stabilizer bar out of vehicle from the LH side.

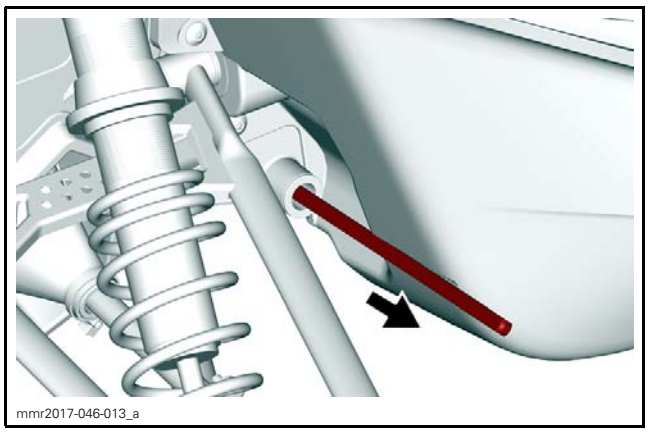


## Installing the Stabilizer Bar

The installation is the reverse of the removal procedure. However, pay attention to the following.

Ensure to install the flat side outwards.

Install the screw with the head upwards.

| TIGHTENING TORQUE | |
|---|---|
| Stabilizer bar link nut | 19 N•m ± 2 N•m (168 lbf•**in** ± 18 lbf•**in**) |

# AIR CONTROLLED SUSPENSION (ACS)

## SERVICE TOOLS

| Description | Part Number | Page |
|---|---|---|
| ENGINE LEAK DOWN TEST KIT | 529 035 661 | 534 |
| FLUKE 115 MULTIMETER | 529 035 868 | 528 |

## SERVICE PRODUCTS

| Description | Part Number | Page |
|---|---|---|
| LOCTITE 592 (PIPE SEALANT) | 293 800 018 | 535, 539 |

*ACE Models*

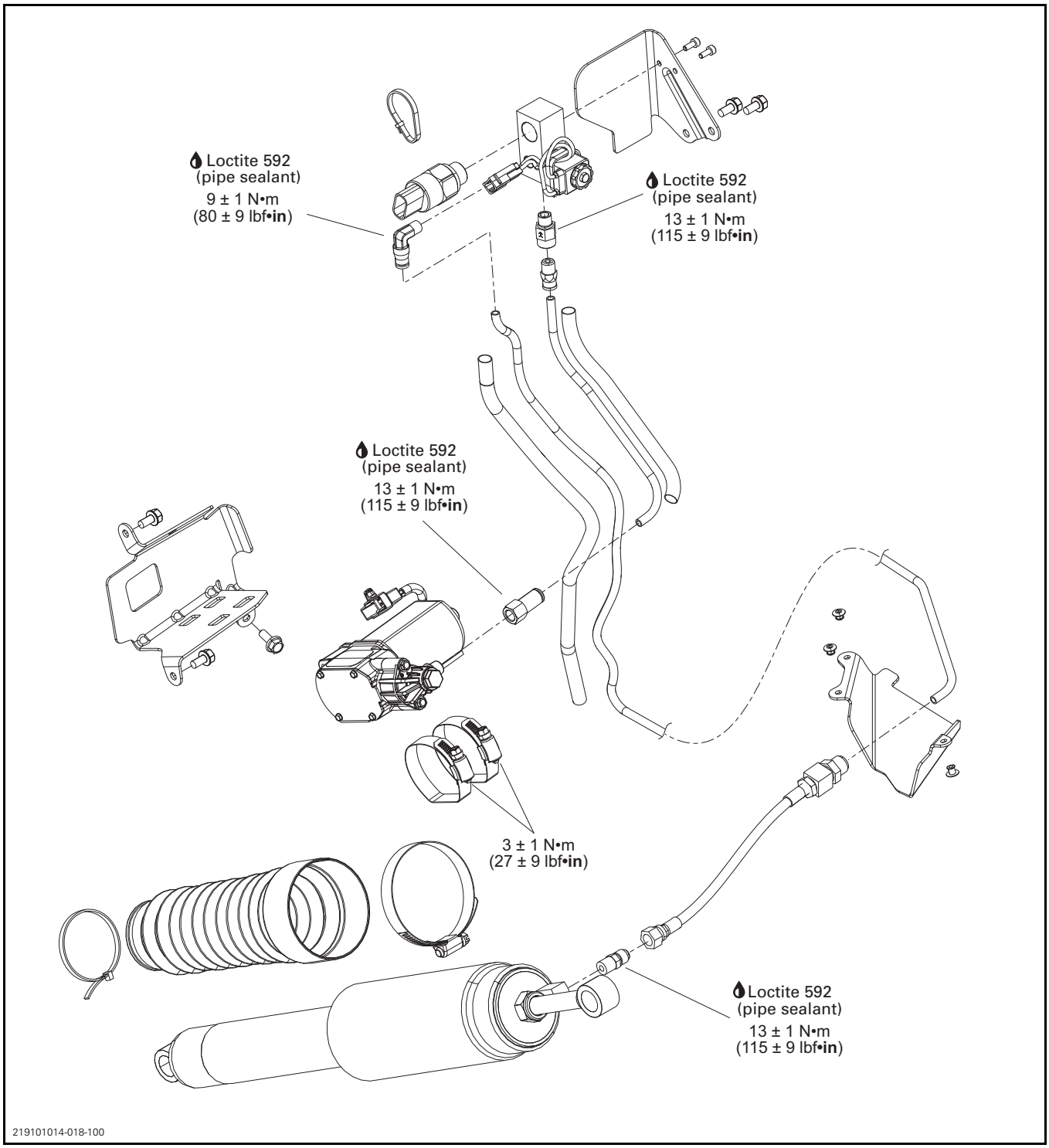
Loctite 592
(pipe sealant)
9 ± 1 N•m
(80 ± 9 lbf•in)
Loctite 592
(pipe sealant)
13 ± 1 N•m
(115 ± 9 lbf•in)
Loctite 592
(pipe sealant)
13 ± 1 N•m
(115 ± 9 lbf•in)
3 ± 1 N•m
(27 ± 9 lbf•in)
Loctite 592
(pipe sealant)
13 ± 1 N•m
(115 ± 9 lbf•in)
219101014-018-100

*E-TEC Models*

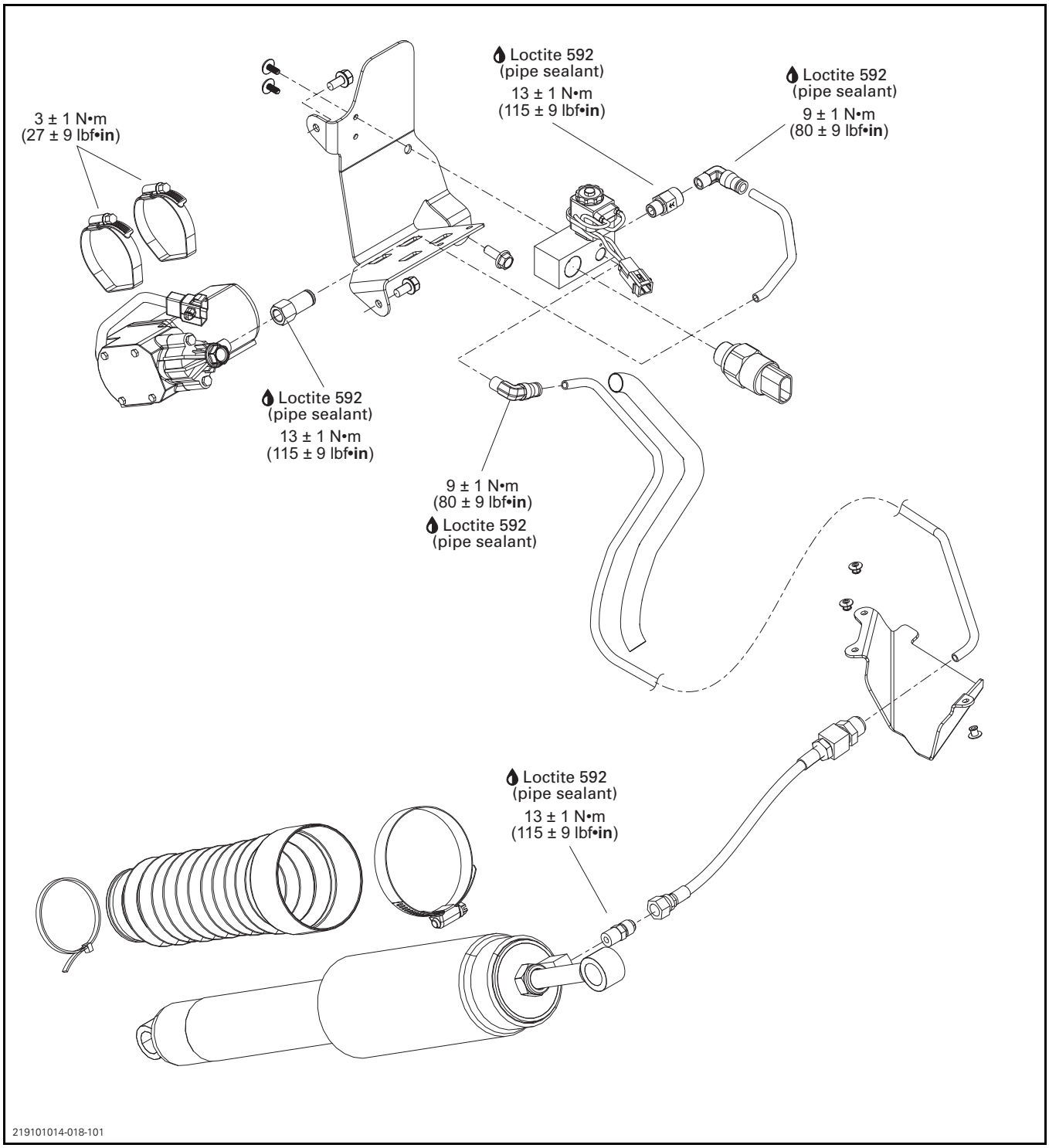
Loctite 592
(pipe sealant)
13 ± 1 N•m
(115 ± 9 lbf•in)
Loctite 592
(pipe sealant)
9 ± 1 N•m
(80 ± 9 lbf•in)
3 ± 1 N•m
(27 ± 9 lbf•in)
Loctite 592
(pipe sealant)
13 ± 1 N•m
(115 ± 9 lbf•in)
9 ± 1 N•m
(80 ± 9 lbf•in)
Loctite 592
(pipe sealant)
Loctite 592
(pipe sealant)
13 ± 1 N•m
(115 ± 9 lbf•in)
219101014-018-101

# GENERAL

The following tool is required to test most of the electrical parts.

| REQUIRED TOOL | |
|---|---|
| FLUKE 115 MULTIMETER (P/N 529 035 868) |  |

During assembly and installation, use torque values and service products as in the exploded views.

Clean threads before applying a threadlocker. Refer to *SELF-LOCKING FASTENERS* and *LOCTITE APPLICATION* at the beginning of this manual for complete procedure.

**⚠ WARNING**

**Torque wrench tightening specifications must be strictly adhered to.**
**Locking devices when removed (e.g.: locking tabs, cotter pins, etc.) must be replaced.**

**⚠ WARNING**

**The ACS suspension system may be under high pressure (up to 8.6 bar (125 PSI)). Release air pressure before working on the system. Refer to *ACS SYSTEM AIR PRESSURE RELEASE* in this subsection.**

**⚠ WARNING**

**Some components may be HOT. Always wait for engine to cool down before performing work.**

## SYSTEM DESCRIPTION (FEATURES)

The air controlled suspension (ACS) system adjusts the comfort and ride height by setting the air pressure in the rear shock absorber. The operator can choose the desired pressure setting, by using the MODE (M) button, whenever the engine is running.

The air pressure setting is controlled by the gauge. The gauge gets feedback from the pressure sensor to keep air pressure constant in the system. Depending on the rider desired setting, the gauge will increase pressure using the ACS compressor or release pressure using the solenoid valve.



619900975-505

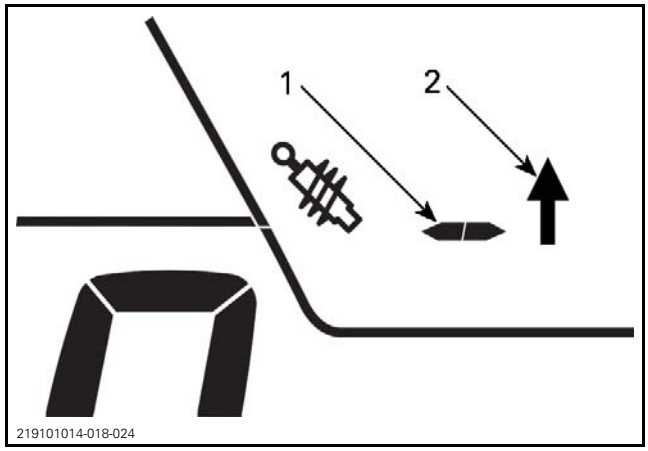

219101014-018-024

*1. Pressure setting not detected (Flashing)*
*2. Pressure increasing*

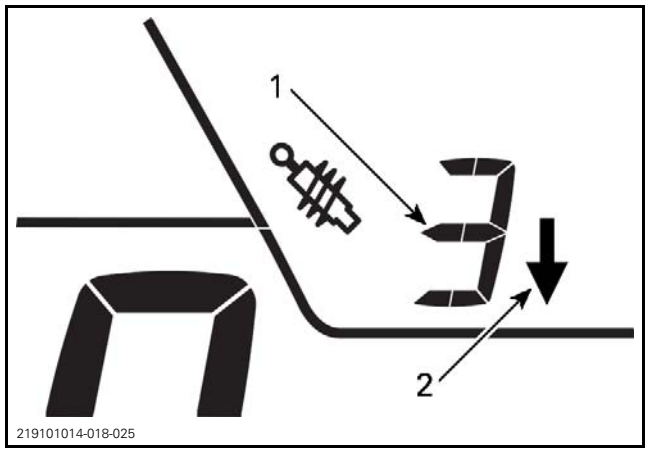

219101014-018-025

*1. Requested setting (Flashing when being selected)*
*2. Pressure decreasing*

The following table shows the air pressure maintained in the rear shock absorber depending on the setting.

| SUSPENSION SETTING (SHOWN IN DIGITAL DISPLAY) | AIR SUSPENSION PRESSURE |
|---|---|
| 1 | 1.4 bar (20 PSI) |
| 2 | 3.1 bar (45 PSI) |
| 3 | 5.2 bar (75 PSI) |
| 4 | 6.6 bar (96 PSI) |
| 5 | 8.6 bar (125 PSI) |

## SYSTEM DESCRIPTION (COMPONENTS)

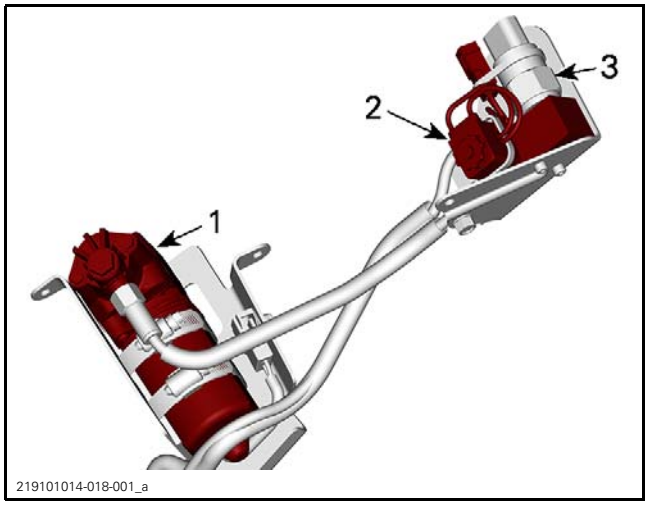


*TYPICAL*
1. *ACS compressor*
2. *ACS manifold assembly (Solenoid valve built in)*
3. *Pressure sensor (PS)*

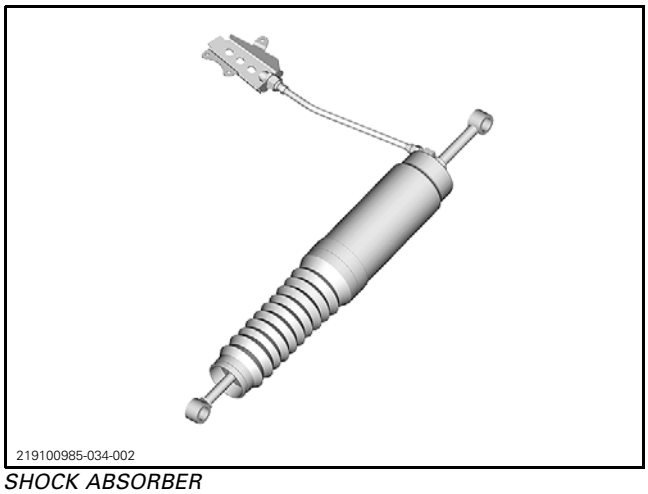


*SHOCK ABSORBER*

# TROUBLESHOOTING

## DIAGNOSTIC TIPS

### Suspension Fault Code

The **suspension fault** code can appear on the gauge for different reasons. This does not necessarily mean a failure of the ACS system.

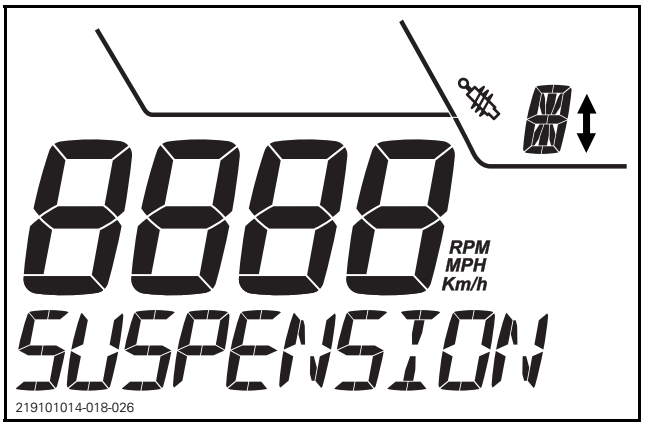


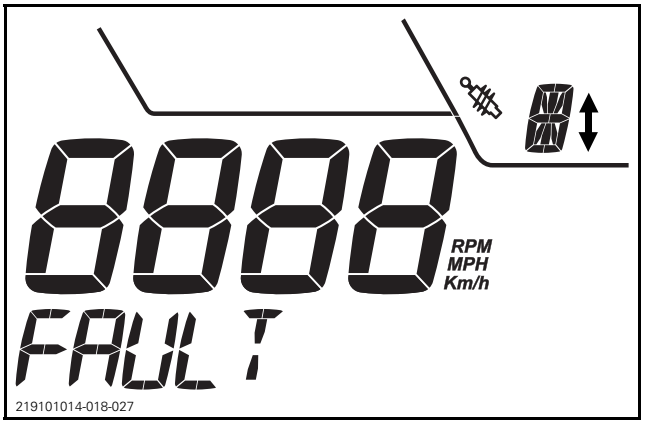


If the fault code appears on the gauge, it indicates a disparity between the requested and the actual suspension settings. Turn off the vehicle to reset the fault code.

If the fault code remains active for more than 2 minutes, it may indicate a major leak in the system. In this case, the gauge will automatically shut down the ACS compressor to prevent it from overheating.

If there is a major leak in the system, check hoses and fittings first, refer to *ACS HOSE LEAK TEST* procedure in this subsection to properly locate and repair the problem.

If no leak is detected from hoses or fittings, inspect the ACS compressor check valve, refer to *CHECK VALVE LEAK TEST (ACS COMPRESSOR)* in this subsection.

#### Suspension Fault Code Displayed and Suspension Setting Can Not Be Adjusted

If no leak is found, it is probably an electrical problem. In this case, an electrical failure of the ACS compressor or the solenoid valve will result the impossibility to change the actual suspension setting.

After multiple attempts to change suspension setting, the gauge will activate a **suspension fault** code. Refer to *TESTING SEQUENCE* for further troubleshooting procedure.

# TESTING SEQUENCE

## SUSPENSION SETTING CANNOT BE CHANGED.

1. Faulty gauge or wiring (refer to *PRESSURE SENSOR (PS)* for testing).
   - *Test PS signal wire continuity.*
   - *Test PS input voltage.*
   - *Test PS ground.*

## ACS SYSTEM CAN ONLY DECREASE PRESSURE.

1. Faulty ACS compressor or wiring (refer to *ACS COMPRESSOR* for testing).
   - *Test ACS compressor operation.*
   - *Test ACS compressor input voltage.*

## ACS SYSTEM CAN ONLY INCREASE PRESSURE.

1. Faulty ACS solenoid valve or wiring (refer to *ACS SOLENOID VALVE* for testing).
   - *Test ACS solenoid valve operation.*
   - *Test ACS solenoid valve input voltage.*

## REQUESTED SETTING DISPLAY IS FLASHING AND DOES NOT CHANGE IN GAUGE WHEN REQUESTED.

1. *SUSPENSION FAULT* error code displayed.
   - *Turn off vehicle and turn it back on to reset error code..*
2. Hose(s) disconnected and/or leaks.
   - *Check hoses connections and leaks. Refer to ACS HOSE LEAK TEST and/or CHECK VALVE LEAK TEST (ACS COMPRESSOR).*

# PROCEDURES

This subsection covers ACS components only. For all other suspension components, refer to *REAR SUSPENSION (TMOTION or SC-5U)*.

# ACS SHOCK ABSORBER

## Removing the Rear Shock Absorber

Release air pressure. Refer to *ACS SYSTEM AIR PRESSURE RELEASE* in this subsection.

1. Disconnect ACS hose from shock absorber. Refer to *ACS HOSE REMOVAL AND INSTALLATION IN QUICK FITTING* in this subsection.

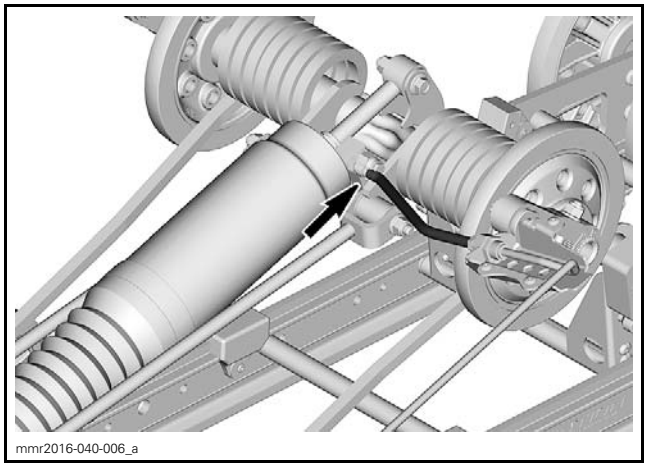
mmr2016-040-006_a

NOTE: To ease shock absorber removal, it may be necessary to unfasten stopper strap to release shock absorber pressure.

1. Lift rear of vehicle and support it off the ground.
2. Remove bolts and nuts from the shock absorber.
3. Remove rear shock absorber.

## Installing the Rear Shock Absorber

The installation is the reverse of the removal procedure.

# AIR CONTROLLED SUSPENSION (ACS) COMPRESSOR

The ACS compressor is located on the RH side of the vehicle, beside the muffler.

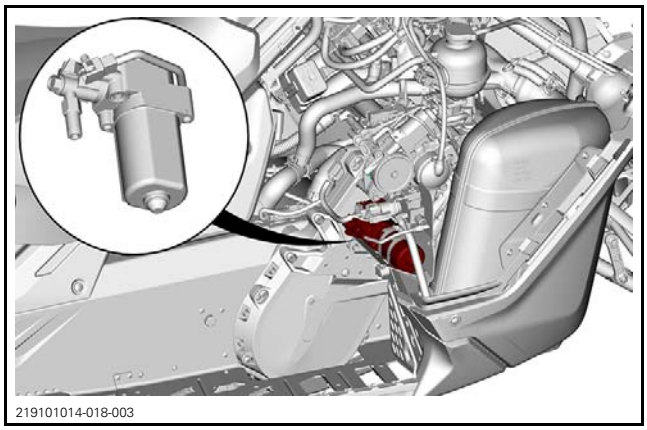
219101014-018-003

## ACS System Air Pressure Release

1. Apply parking brake.
2. Start engine.
3. Press and hold MODE (M) button until requested setting starts flashing.
4. Set suspension mode to **1** (lowest pressure) by pressing the MODE (M) button to cycle trough settings.

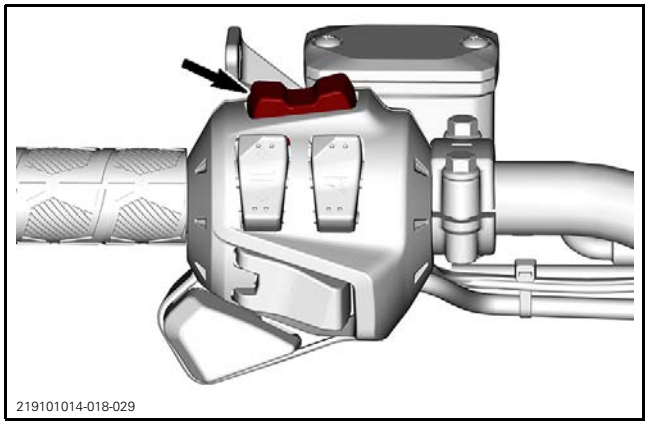
219101014-018-029

5. Wait until the actual setting shows 1 (lower display).

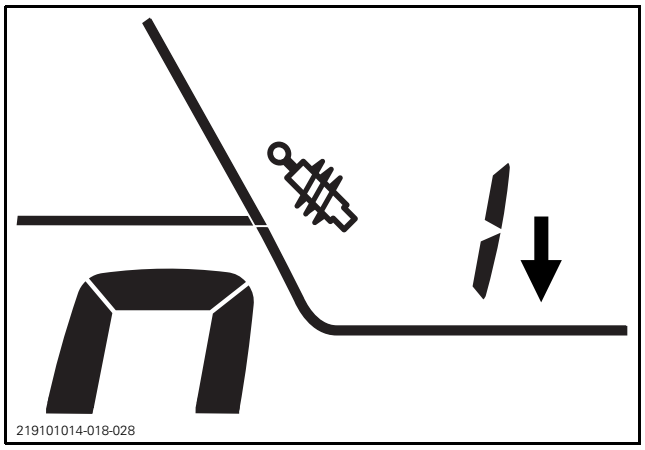
219101014-018-028

## Testing the ACS Compressor with BUDS

Connect the vehicle to the BRP diagnostic software (BUDS2) and activate the function *SUSPENSION POSITION*. Follow instruction on screen.

If necessary, proceed with the following sequence.

## Testing the ACS Compressor Operation

**NOTICE** **Do not power the ACS compressor directly with the battery for more than 10 seconds. Apply voltage quickly to ensure that the ACS compressor will not over pressurize the ACS system. Respect a 1 minute cool down between tests.**

1. Release air pressure. Refer to *ACS SYSTEM AIR PRESSURE RELEASE* in this subsection.
2. Disconnect ACS compressor connector.

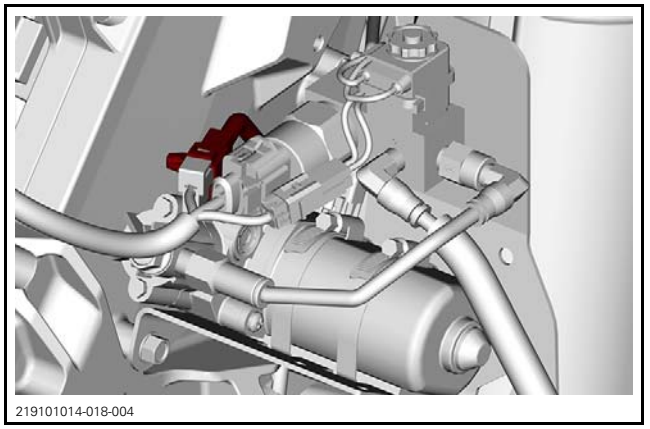
219101014-018-004

3. Connect ACS compressor connector pin 2 to a 15 A fuse jumper and then directly to the positive battery post.
4. Connect ACS compressor connector pin 1 directly to the negative battery post.
5. Verify if ACS compressor works properly.
   - If it works, carry out *TESTING THE ACS COMPRESSOR INPUT VOLTAGE*
   - If it does not work - replace the compressor.

## Testing the ACS Compressor Input Voltage

1. Release air pressure. Refer to *ACS SYSTEM AIR PRESSURE RELEASE* in this subsection.
2. Set the multimeter to Vdc.
3. Disconnect ACS compressor connector.
4. Apply parking brake.
5. Start engine.
6. Press and hold MODE (M) button until requested setting starts flashing.
7. Set suspension mode to **2** by pressing the MODE (M) button to cycle through settings.

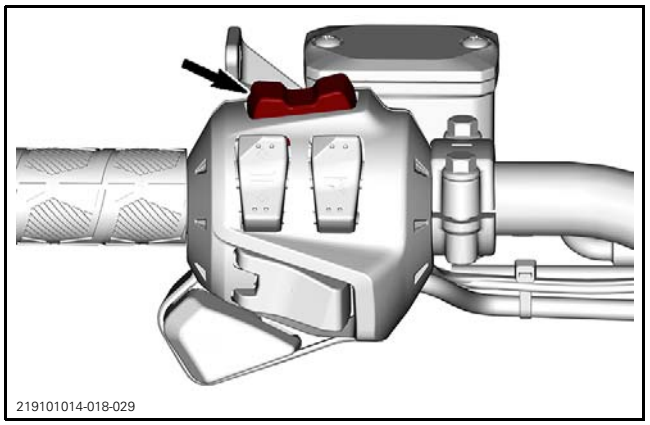
219101014-018-029

8. Measure voltage as per the following table.

| ACS COMPRESSOR INPUT VOLTAGE TEST | | |
|---|---|---|
| COMPRESSOR CONNECTOR PIN | | SPECIFICATIONS |
| 1 | 4 | Battery voltage |

If voltage is not as specified, carry out the following.

| ACS COMPRESSOR INPUT VOLTAGE TEST | | |
|---|---|---|
| COMPRESSOR CONNECTOR PIN | BATTERY | SPECIFICATIONS |
| 2 | Negative (-) post | Battery voltage |

If voltage is to specification, check the compressor ground circuit continuity.

If voltage is not to specification, carry out *TESTING THE COMPRESSOR RELAY*.

## Testing the Compressor Relay

The compressor relay is mounted on the chaincase.

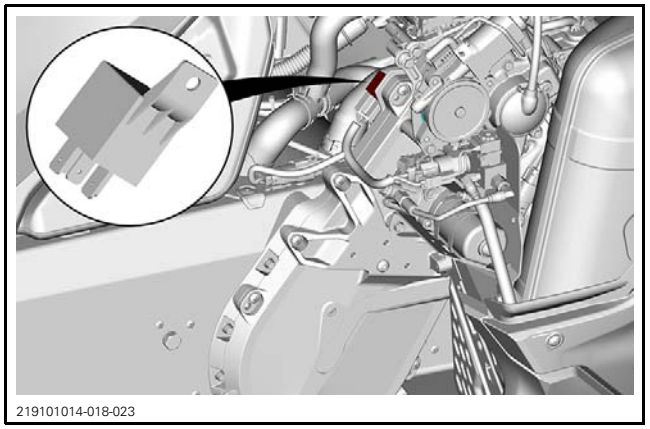
219101014-018-023

1. Pull off the relay connector without completely removing it.
2. Install a fused jumper wire between pin 85 and battery positive (+) post.

If the relay "clicks", it is good and the compressor should start.

If the relay does not "click", replace the relay and retest.

If the new relay does not "click":

– Check the fuse
– Check the relay control circuit continuity. Refer to *WIRING DIAGRAM*.

## Removing the ACS Compressor

1. Release air pressure. Refer to *ACS SYSTEM AIR PRESSURE RELEASE* in this subsection.
2. Disconnect ACS harness connectors.

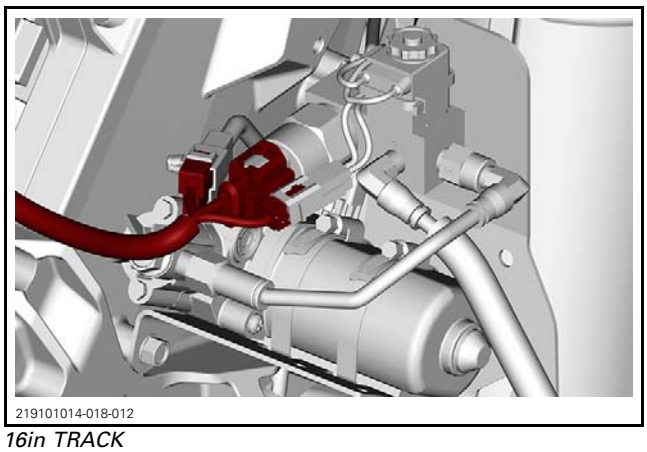
219101014-018-012

*16in TRACK*

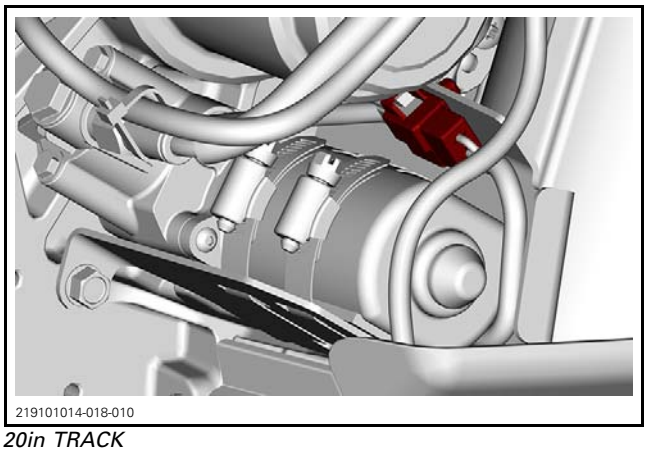
219101014-018-010

*20in TRACK*

### *With 20in Track*

3. Remove RH side bottom pan rear screw to access compressor support screw.

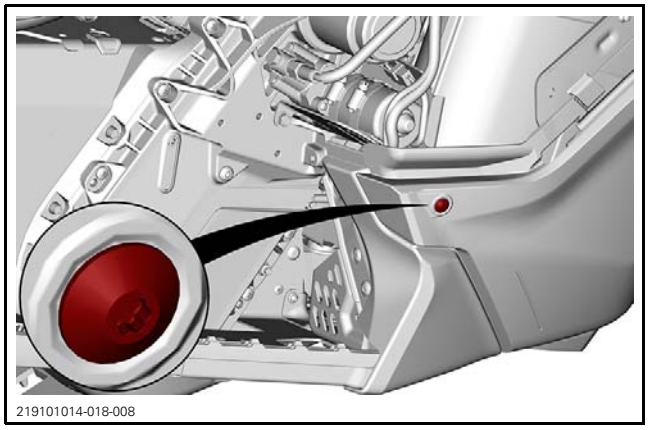
219101014-018-008

4. Cut ACS harness locking tie.

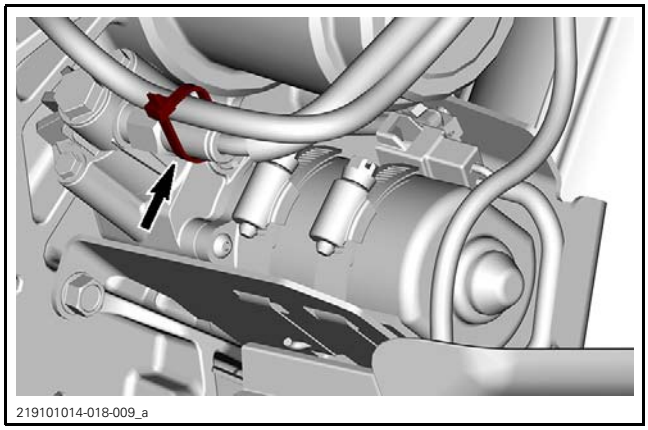
219101014-018-009_a

*All Models*

5. Disconnect hose from ACS compressor. Refer to *ACS HOSE REMOVAL AND INSTALLATION IN QUICK FITTING* in this subsection.

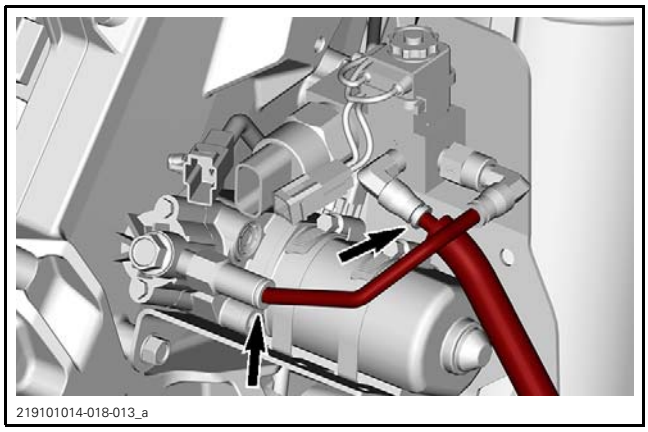
219101014-018-013_a

*16in TRACK*

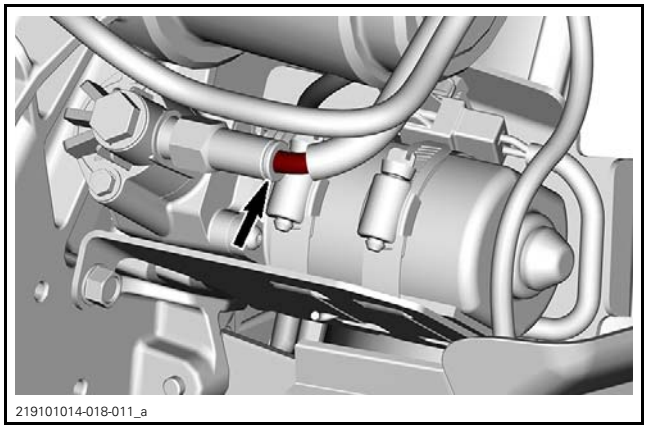
219101014-018-011_a

*20in TRACK*

6. Remove compressor support screws.

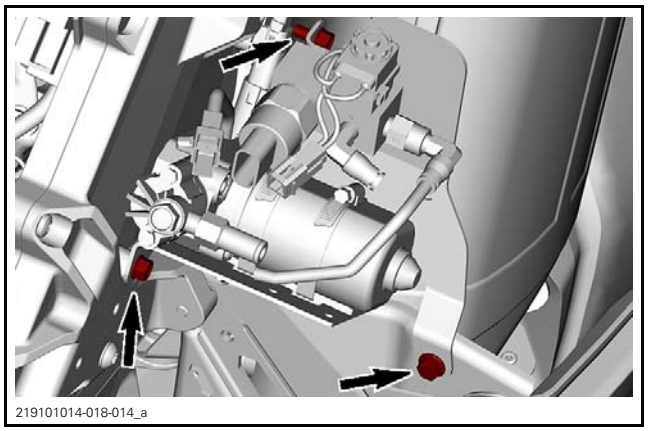
219101014-018-014_a

*16in TRACK*

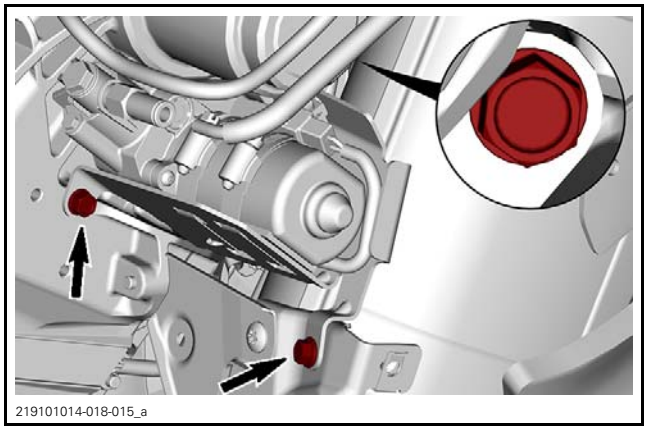
219101014-018-015_a

*20in TRACK*

7. Loosen ACS compressor gear clamps.

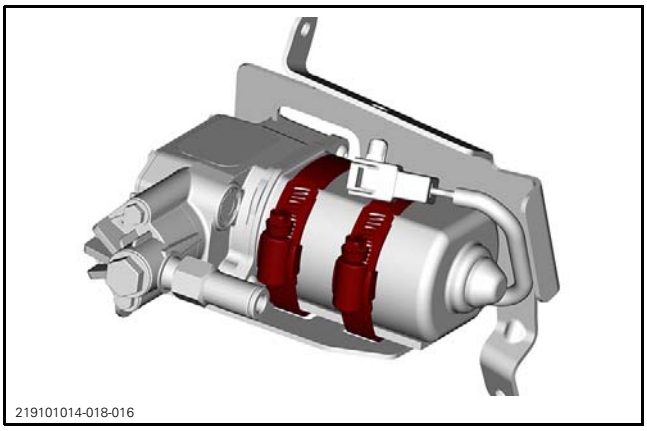
219101014-018-016

8. Slide the compressor out of the clamps.

### Installing the ACS Compressor

The installation is the reverse of the removal procedure.

## CHECK VALVE

### Testing Check Valve with BUDS

Connect the vehicle to the BRP diagnostic software (BUDS2) and activate the function *SUSPENSION POSITION*. Follow instruction on screen.

If necessary, proceed with the following sequence.

### Check Valve Leak Test (ACS Compressor)

| REQUIRED TOOL | |
|---|---|
| ENGINE LEAK DOWN TEST KIT (P/N 529 035 661) |  |

1. Release air pressure. Refer to *ACS SYSTEM AIR PRESSURE RELEASE* in this subsection.
2. Disconnect inlet hose from ACS manifold. Refer to *ACS HOSE REMOVAL AND INSTALLATION IN QUICK FITTING* in this subsection.

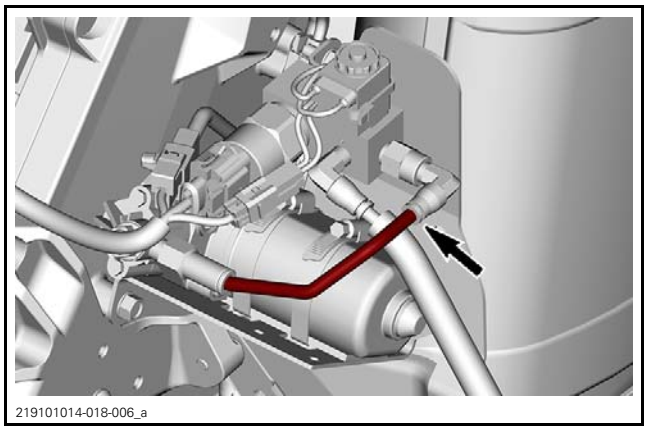
219101014-018-006_a

*16in TRACK*

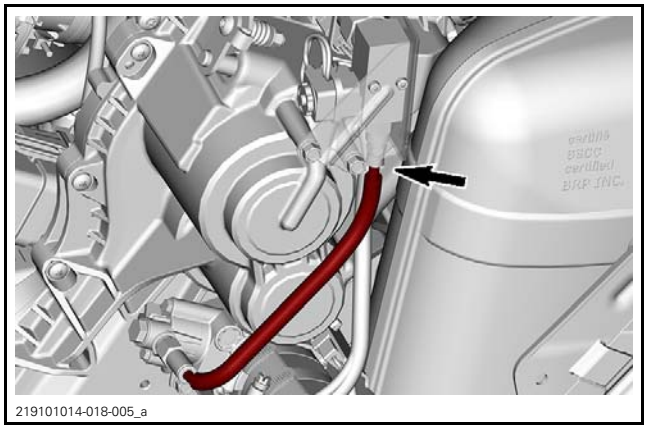
219101014-018-005_a

*20in TRACK*

3. Connect workshop air supply into engine leak down test kit.

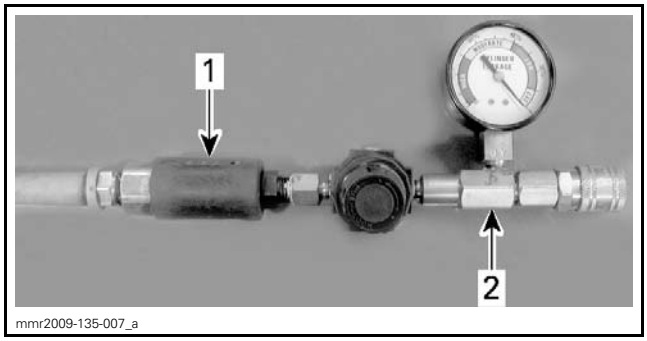

mmr2009-135-007_a

*1. Workshop air supply*
*2. Engine leak down test kit*

4. Adjust engine leak down test kit reading to 0 using knob.

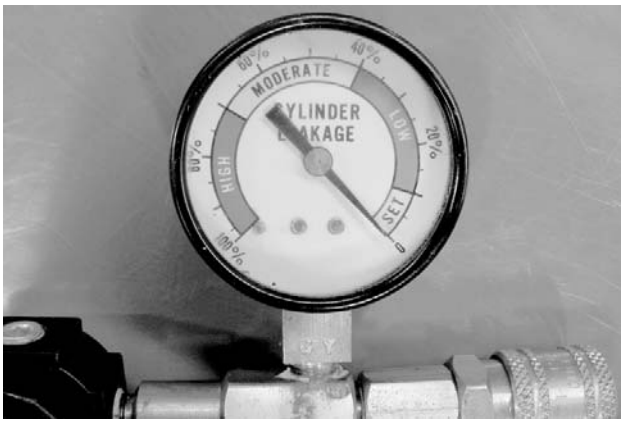

mmr2009-135-008

5. Connect a suitable adapter between the manifold hose end and engine leak down test kit output hose.
6. Refer to the following table for check valve leak.

| LEAK PERCENTAGE | CHECK VALVE |
|---|---|
| Below 10% | Good (do not replace) |
| Above 10% | Faulty (replace it) |

## Replacing the ACS Check Valve

NOTE: It is not required to remove the manifold from its support.

1. Disconnect hose from quick fitting.
2. Remove quick fitting and check valve.

At check valve installation, pay attention to the following.

Apply pipe sealant on threads of the check valve.

| SERVICE PRODUCT |
|---|
| LOCTITE 592 (PIPE SEALANT) (P/N 293 800 018) |

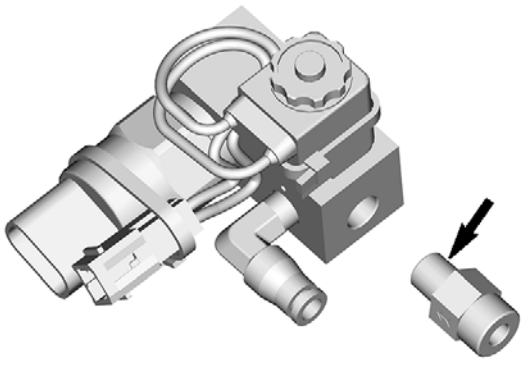
219101014-018-007_a

| TIGHTENING TORQUE | |
|---|---|
| Check valve (to manifold) | 13 N•m ± 1 N•m (115 lbf•**in** ± 9 lbf•**in**) |

# PRESSURE SENSOR (PS)

## Testing the PS Input Voltage

1. Disconnect PS connector.
2. Set the multimeter to Vdc.
3. Apply parking brake.
4. Start engine.
5. Measure voltage as per the following table.

| PS INPUT VOLTAGE TEST | | |
|---|---|---|
| PS CONNECTOR PIN | | SPECIFICATIONS |
| 1 | 3 | Battery voltage |

If reading is to specification, carry out *TESTING THE PS SIGNAL VOLTAGE*.

If reading is out of specification, carry out *TESTING THE PS CIRCUIT CONTINUITY*.

## Testing the PS Circuit Continuity

1. Disconnect PS connector.
2. Set the multimeter to Vdc.
3. Measure voltage as per the following table.

| PS CIRCUIT CONTINUITY TEST | | |
|---|---|---|
| PS CONNECTOR PIN | BATTERY | SPECIFICATIONS |
| 3 | Positive (+) post | Battery voltage |

If reading is out of specification, check the fuse, connector and wire. Repair if required.

If reading is to specification, carry out the following.

| PS INPUT VOLTAGE TEST | | |
|---|---|---|
| PS CONNECTOR PIN | BATTERY | SPECIFICATIONS |
| 1 | Negative (-) post | Battery voltage |

If reading is out of specification, check the fuse, connector and wire. Repair if required.

## Testing the PS Signal Voltage

1. Set the multimeter to Vdc.
2. Apply parking brake.
3. Start engine.
4. Using backprobes, measure as per the following table.

| PS SIGNAL WIRE CONTINUITY TEST | | | |
|---|---|---|---|
| PS CONNECTOR PIN | | SUSPENSION SETTING | SPECIFICATIONS |
| 2 | 3 | 1 | 0.5 Vdc (approx.) |
| | | 3 | 2.5 Vdc (approx.) |
| | | 5 | 4.5 Vdc (approx.) |

If reading is to specification, carry out *TESTING THE PS SIGNAL CIRCUIT CONTINUITY*.

### Testing the PS Signal Circuit Continuity

1. Disconnect multifunction gauge connector. Refer to *BODY* subsection.
2. Disconnect PS connector. Refer to *REMOVING THE PS*.
3. Set the multimeter to Ω.
4. Measure resistance as per the following table.

| PS SIGNAL CIRCUIT CONTINUITY TEST | | |
|---|---|---|
| PS CONNECTOR PIN | GAUGE CONNECTOR PIN | SPECIFICATIONS |
| 2 | 5 | Close to 0 Ω |

If reading is to specification, the problem may come from the gauge.

If reading is not to specification, check and repair connectors or wire.

### Removing the PS

1. Release air pressure. Refer to *ACS SYSTEM AIR PRESSURE RELEASE* in this subsection.
2. Remove the manifold from its support. Refer to *REMOVING THE MANIFOLD*.
3. Place the manifold in a vise.
4. Remove the PS.

### Installing the PS

The installation is the reverse of the removal procedure. However, pay attention to the following.

Tighten PS to specification.

| TIGHTENING TORQUE | |
|---|---|
| Pressure sensor | 27.5 N•m ± 2.5 N•m (20 lbf•ft ± 2 lbf•ft) |

## ACS SOLENOID VALVE

### Testing the ACS Solenoid Valve Operation

1. Apply parking brake.
2. Start engine.
3. Press and hold MODE (M) button until requested setting starts flashing.
4. Set suspension mode to **2** by pressing the mode (M) button to cycle through setting.

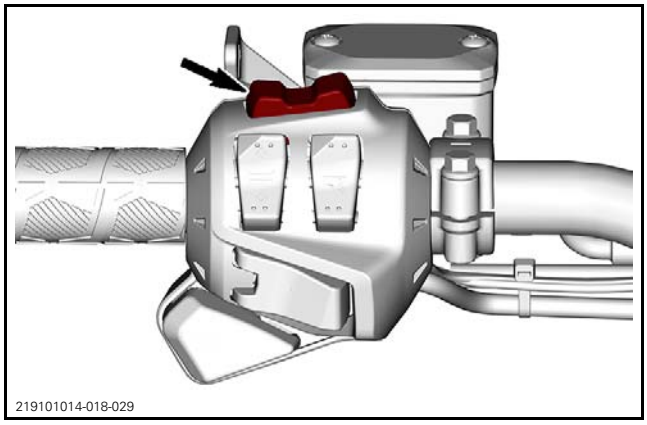


5. Wait until the actual setting shows 2.

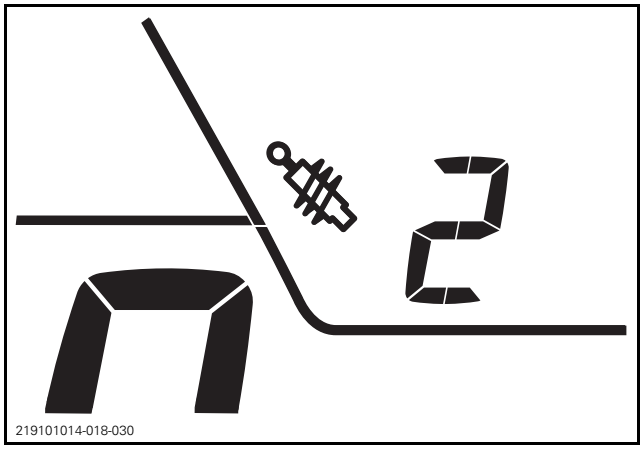


NOTE: Make sure to let the system adjust the air pressure.

6. Stop engine.
7. Open RH side panel.
8. Disconnect solenoid valve connector.

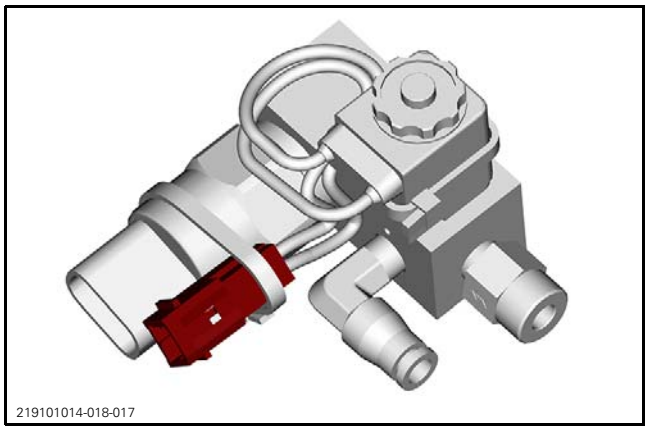


9. Connect solenoid valve connector pin 2 to a 15 A fuse jumper and then directly to the positive battery post.

NOTE: Apply voltage shortly to ensure that the valve will not completely empty the ACS system.

10. Connect solenoid valve connector pin 1 directly to the negative battery post.
11. Verify that air exits from solenoid valve area to confirm solenoid operation.

## Testing the ACS Solenoid Valve Input Voltage

1. Install D.E.S.S. key on its post.
2. Make sure the emergency stop switch is in RUN position.
3. Measure voltage as per following table.

| SOLENOID INPUT VOLTAGE TEST | | |
|---|---|---|
| SOLENOID CONNECTOR PIN | BATTERY | SPECIFICATIONS |
| 2 | Negative (-) post | Battery voltage |

## Testing the ACS Solenoid Valve Input Voltage (Dynamic)

1. Apply parking brake.
2. Start engine.
3. Press MODE (M) button until requested setting starts flashing.
4. Set suspension mode to **2** by pressing the MODE (M) button to cycle through settings.

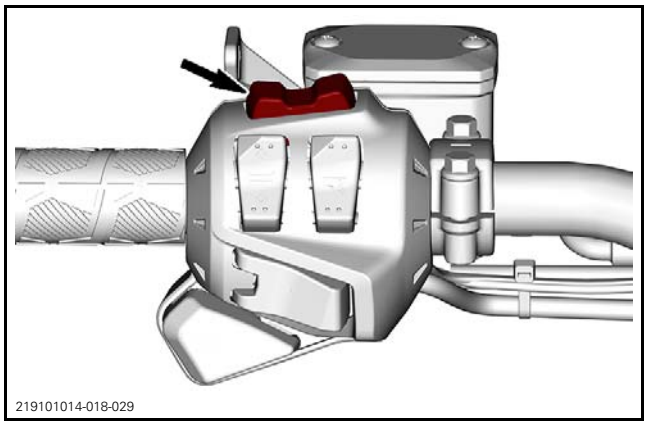


5. Wait until the actual setting shows 2 (lower display).

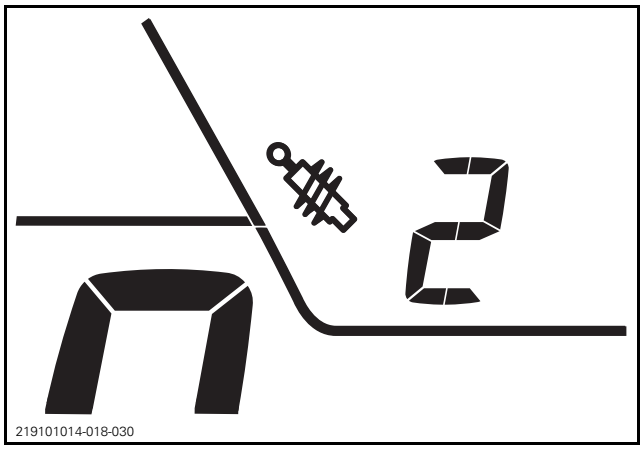


NOTE: Make sure to let the system adjust the air pressure.

6. Set the multimeter to Vdc.
7. Open RH side panel.
8. Back probe solenoid connector (without disconnecting).
9. Press and hold MODE (M) button until requested setting flash.
10. Set suspension mode to 1 by pressing the MODE (M) button to cycle through settings.
11. Measure voltage between solenoid connector terminals as per the following table.

| PS INPUT VOLTAGE TEST | | |
|---|---|---|
| PS CONNECTOR PIN | BATTERY | SPECIFICATIONS |
| 1 | Negative (-) post | Battery voltage |

If voltage is not as specified, test ground and input voltage circuits separately.

## Removing the ACS Solenoid Valve

ACS solenoid valve is part of the ACS manifold. Refer to *REMOVING THE ASC MANIFOLD*.

# ACS MANIFOLD

## Removing the ACS Manifold

1. Release air pressure. Refer to *ACS SYSTEM AIR PRESSURE RELEASE* in this subsection
2. Remove RH side panel.

*With 16in Track*

3. Disconnect manifold connectors.

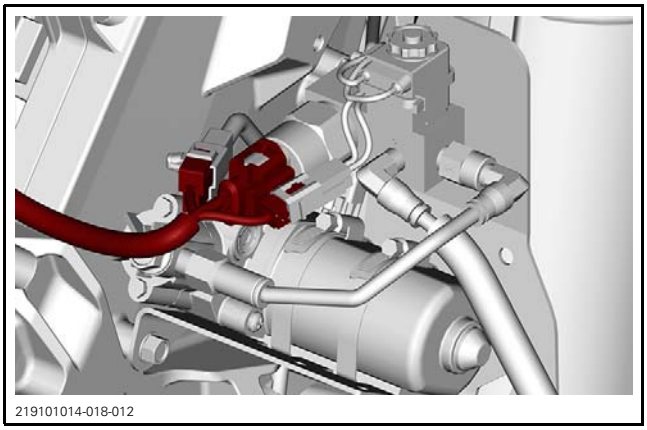
219101014-018-012

4. Disconnect all hoses from manifold.

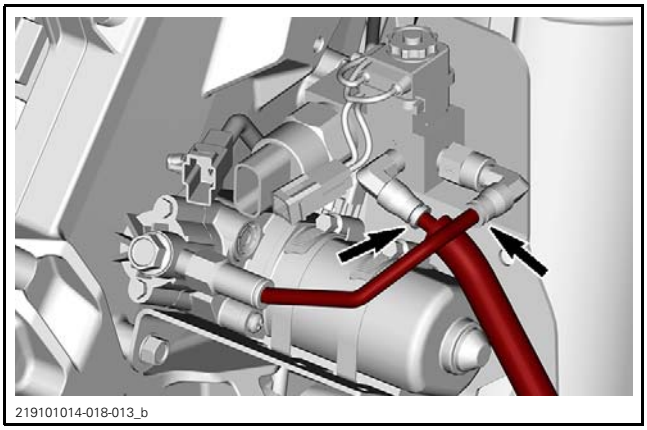
219101014-018-013_b

5. Remove manifold support screws.

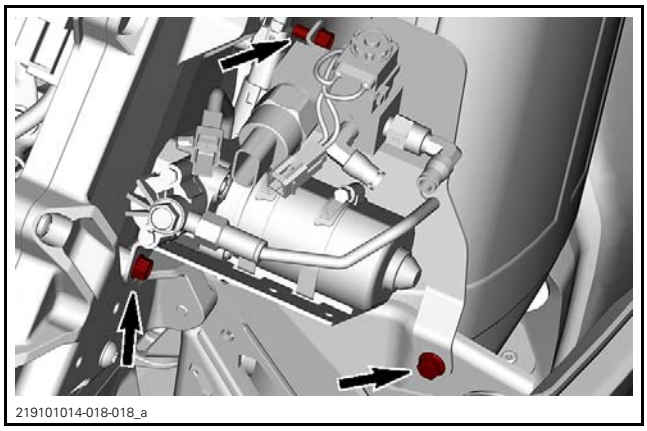
219101014-018-018_a

6. Remove manifold retaining screws.

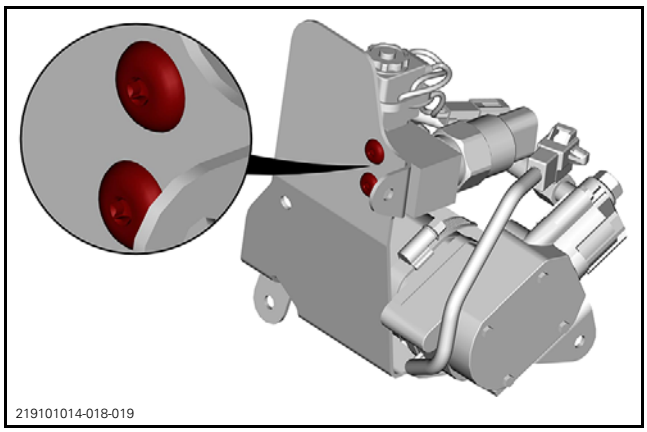
219101014-018-019

*With 20in Track*

7. Remove manifold support screws.

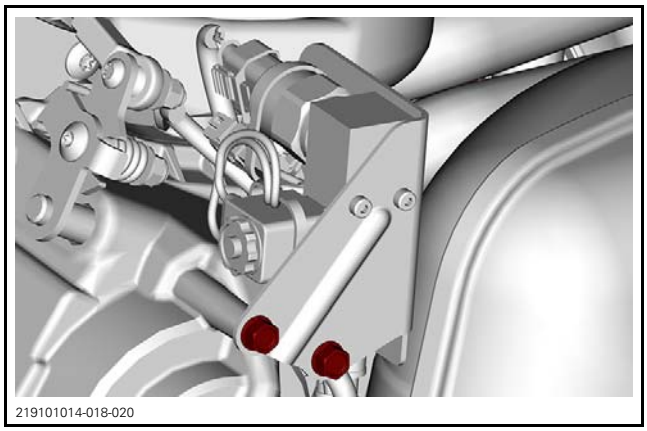
219101014-018-020

8. Remove manifold retaining screws.

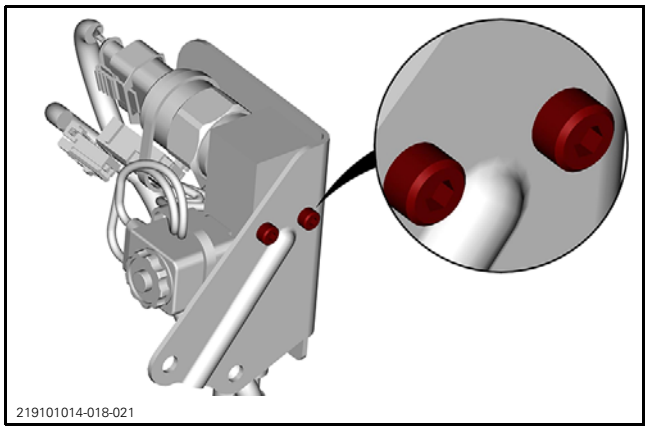


9. Disconnect manifold connectors and hoses.

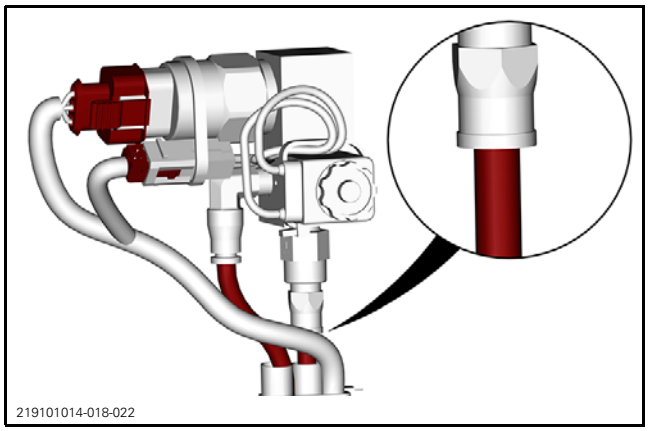


## Installing the ACS Manifold

The installation is the reverse of the removal procedure.

## ACS Manifold Quick Fitting

The installation is the reverse of the removal procedure. However, pay attention to the following.

| TIGHTENING TORQUE | |
|---|---|
| Straight quick fittings | 13 N•m ± 1 N•m (115 lbf•**in** ± 9 lbf•**in**) + LOCTITE 592 (PIPE SEALANT) (P/N 293 800 018) |
| 90° quick fitting | 9 N•m ± 1 N•m (80 lbf•**in** ± 9 lbf•**in**) + LOCTITE 592 (PIPE SEALANT) (P/N 293 800 018) |

# ACS HOSES

## ACS Hose Removal and Installation in Quick Fitting

Release air pressure, refer to *ACS SYSTEM AIR PRESSURE RELEASE* in this subsection.

1. To disconnect ACS hose from the quick fitting, proceed as follows:
   1.1 Push ring towards hose fitting.
   1.2 Hold ring in place.
   1.3 Pull out ACS hose.

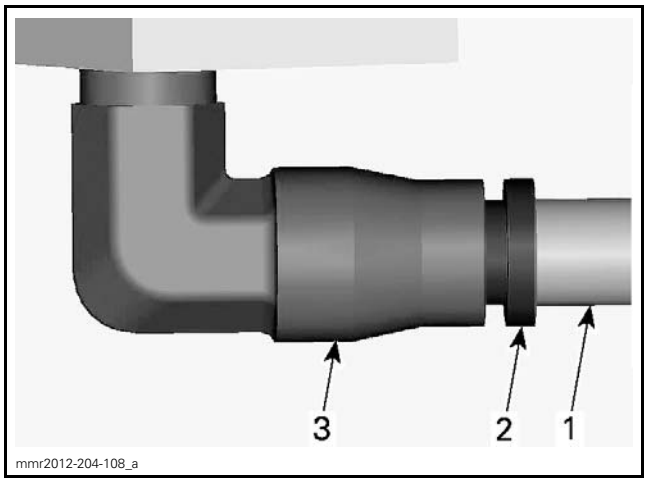


*1. Hose*
*2. Ring*
*3. Fitting*

2. To connect ACS hose to the quick fitting, proceed as follows:
   2.1 Insert ACS hose (approx. 17 mm (.67 in)) into fitting ring until the painted mark disappears under the fitting.

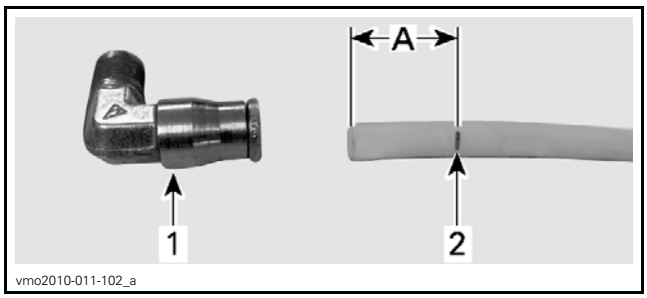


*PUSH HOSE UNTIL THE MARK IS COMPLETELY INSERTED*
*1. Fitting*
*2. Painted mark*
*A. approx. 17 mm (.67 in)*

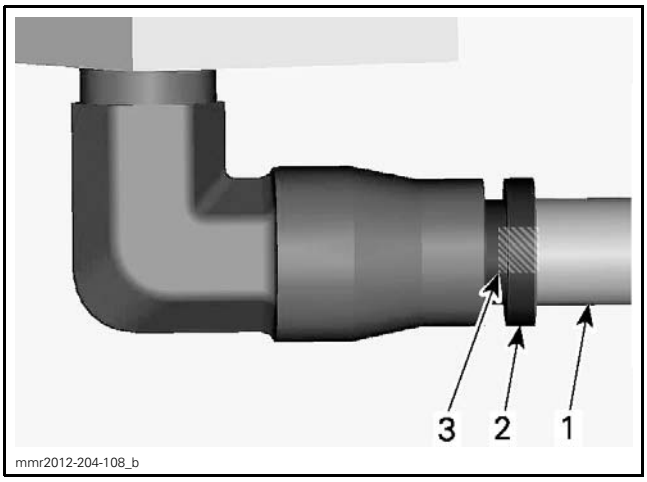


*1. Hose*
*2. Ring*
*3. Painted mark*

2.2 The ring will automatically lock the ACS hose.

## ACS Hose Leak Test

1. Apply parking brake.
2. Start engine.
3. Press and hold MODE (M) button until requested setting starts flashing.
4. Set suspension mode to **3** by pressing the MODE (M) button to cycle through settings.
5. Wait until the actual setting shows 3 (lower display).

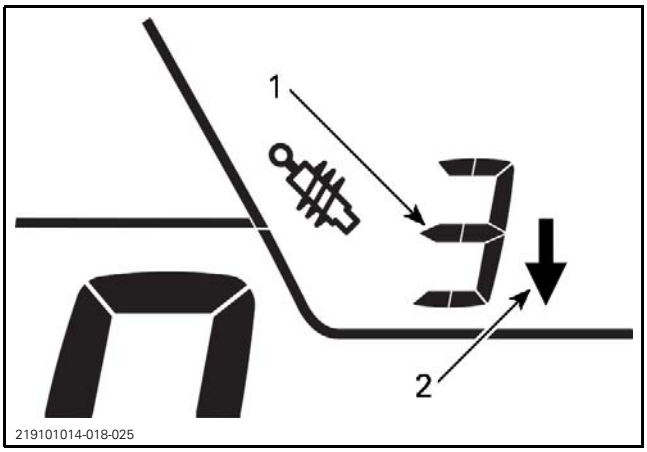


*1. Requested setting (Flashing when being selected)*
*2. Pressure decreasing*

NOTE: Make sure to let the system adjust the air pressure.

6. Inspect all hoses and fittings with soapy water to detect leaks.
   – At the shock absorber
   – Under the running board
   – The long hose in the running board roller
   – In the compressor area.

# REAR SUSPENSION (EFI)

## SERVICE PRODUCTS

| Description | Part Number | Page |
|---|---|---|
| SYNTHETIC SUSPENSION GREASE | 779163 | 546 |

## RAILS AND IDLER WHEELS

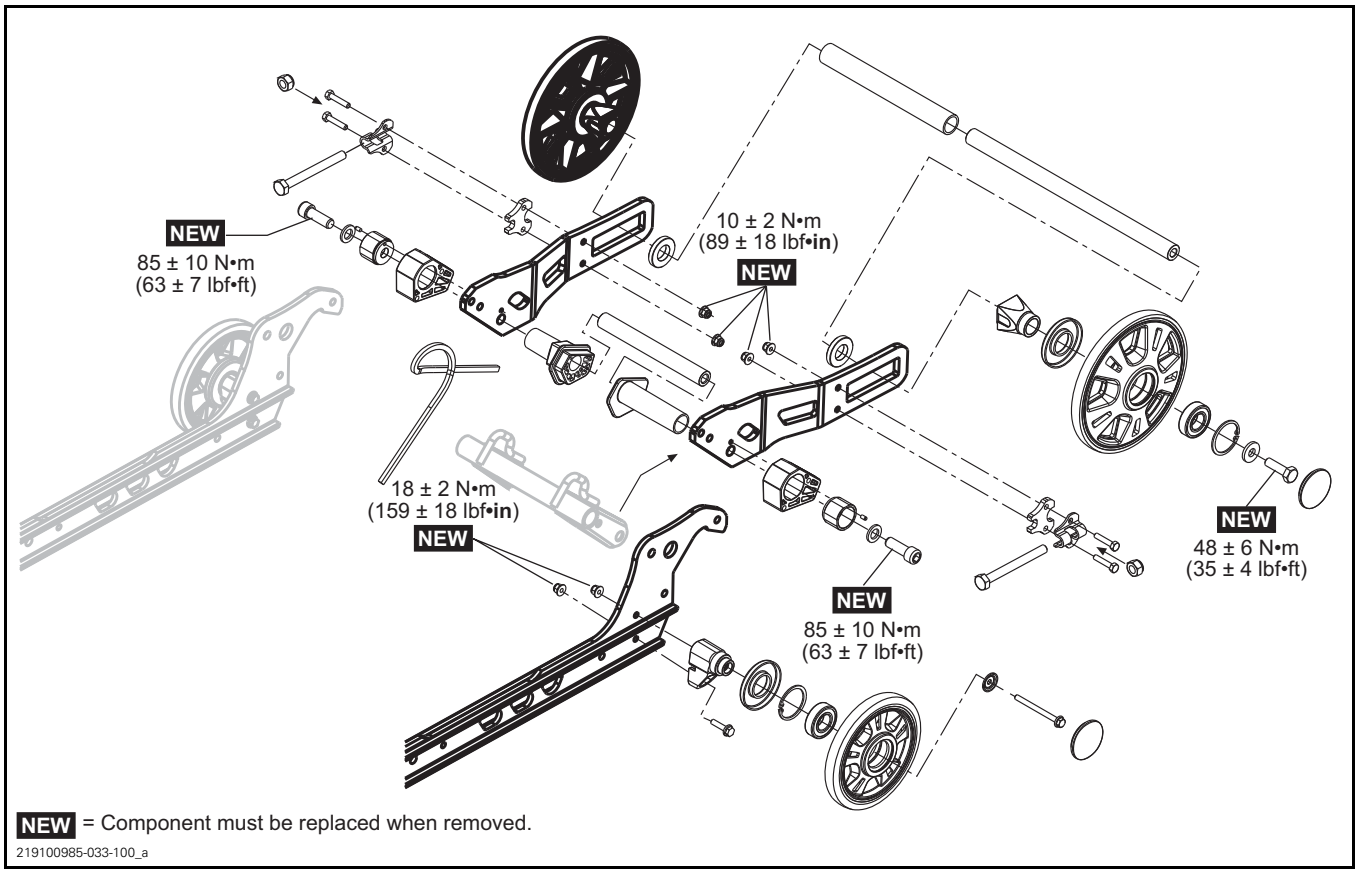

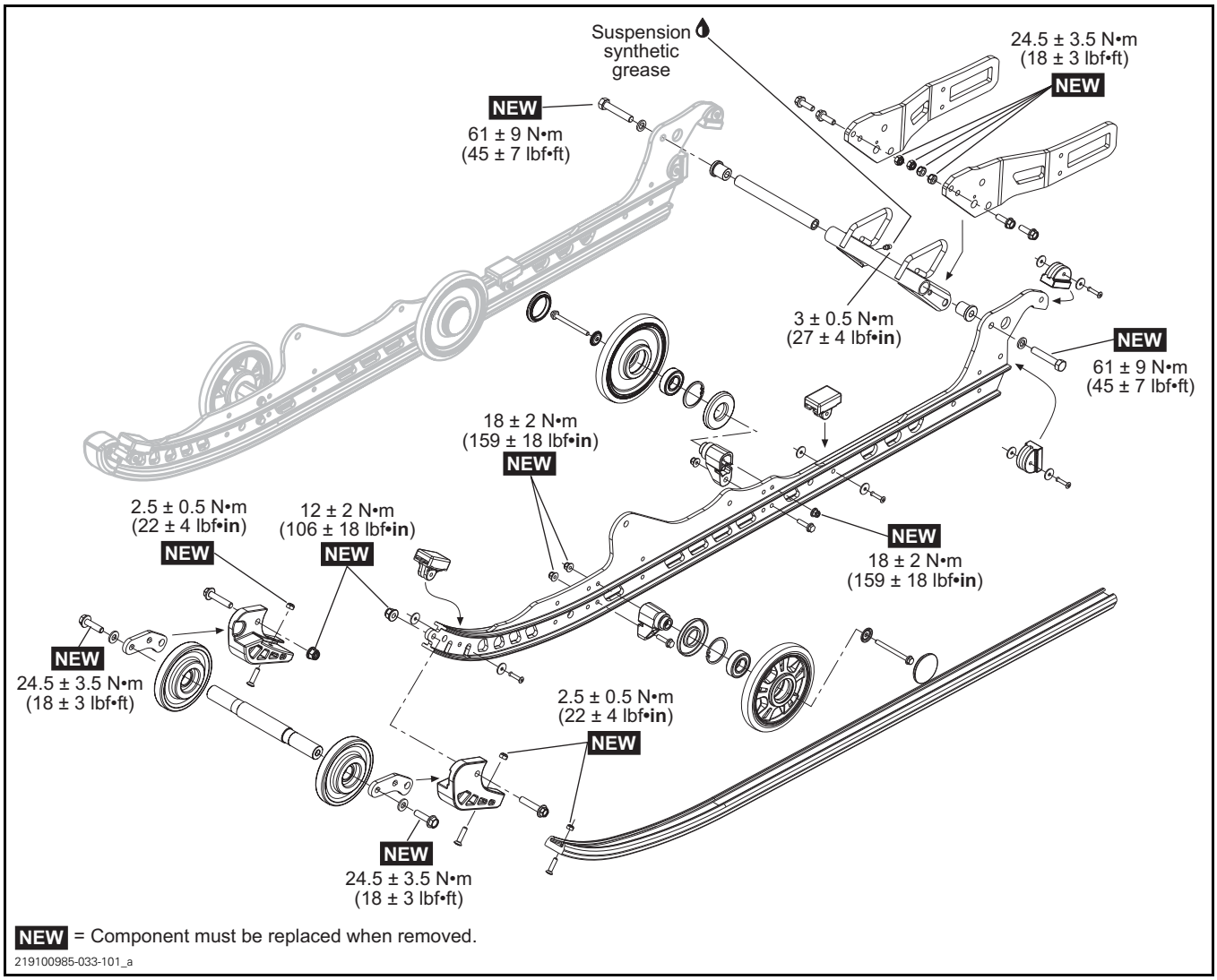


**NEW** = Component must be replaced when removed.

219100985-033-101_a

# FRONT ARM

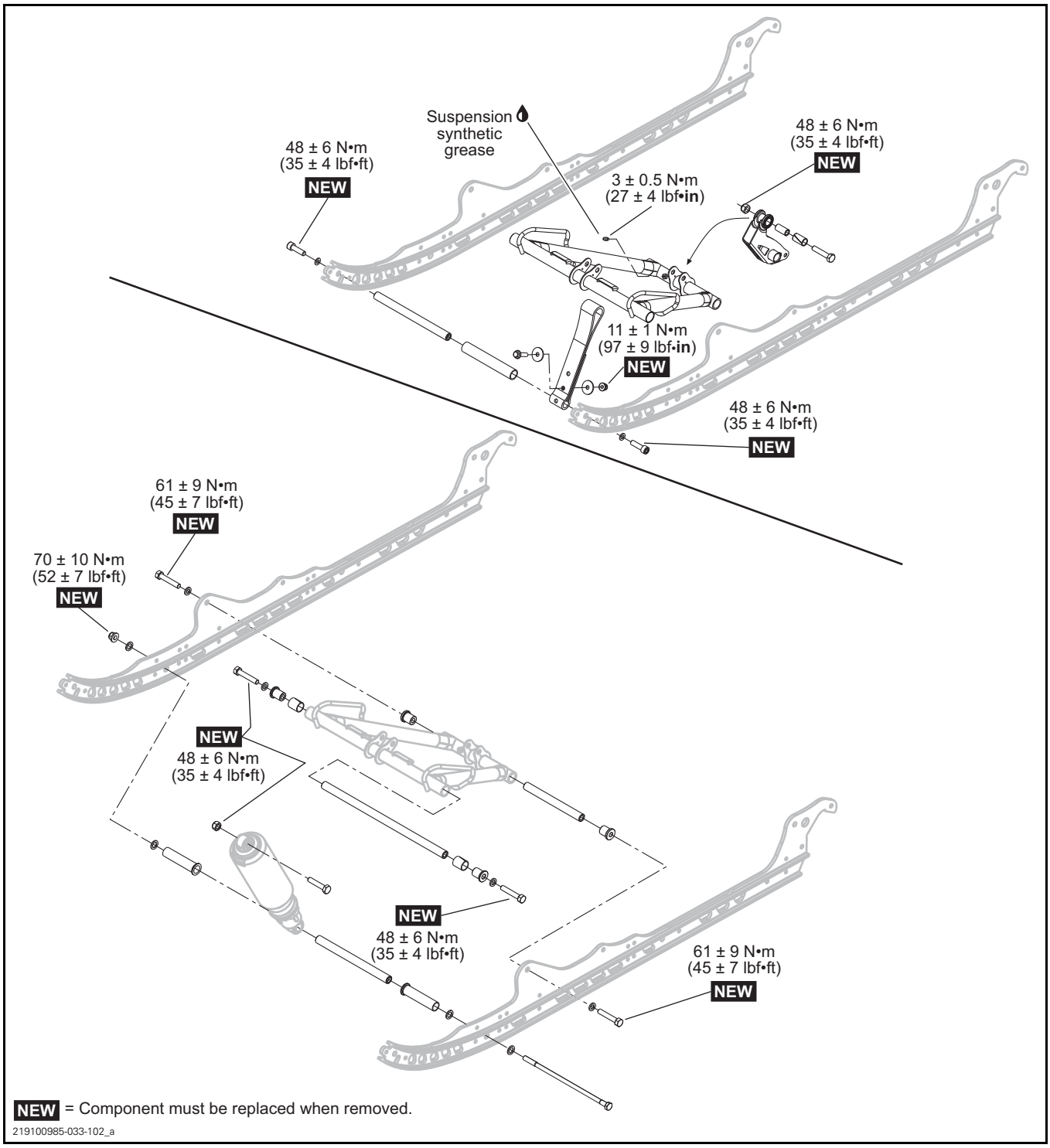
48 ± 6 N•m
(35 ± 4 lbf•ft)
NEW
Suspension
synthetic
grease
48 ± 6 N•m
(35 ± 4 lbf•ft)
NEW
3 ± 0.5 N•m
(27 ± 4 lbf•in)
11 ± 1 N•m
(97 ± 9 lbf•in)
NEW
48 ± 6 N•m
(35 ± 4 lbf•ft)
NEW
61 ± 9 N•m
(45 ± 7 lbf•ft)
NEW
70 ± 10 N•m
(52 ± 7 lbf•ft)
NEW
NEW
48 ± 6 N•m
(35 ± 4 lbf•ft)
NEW
48 ± 6 N•m
(35 ± 4 lbf•ft)
61 ± 9 N•m
(45 ± 7 lbf•ft)
NEW
NEW = Component must be replaced when removed.
219100985-033-102_a

# REAR ARM

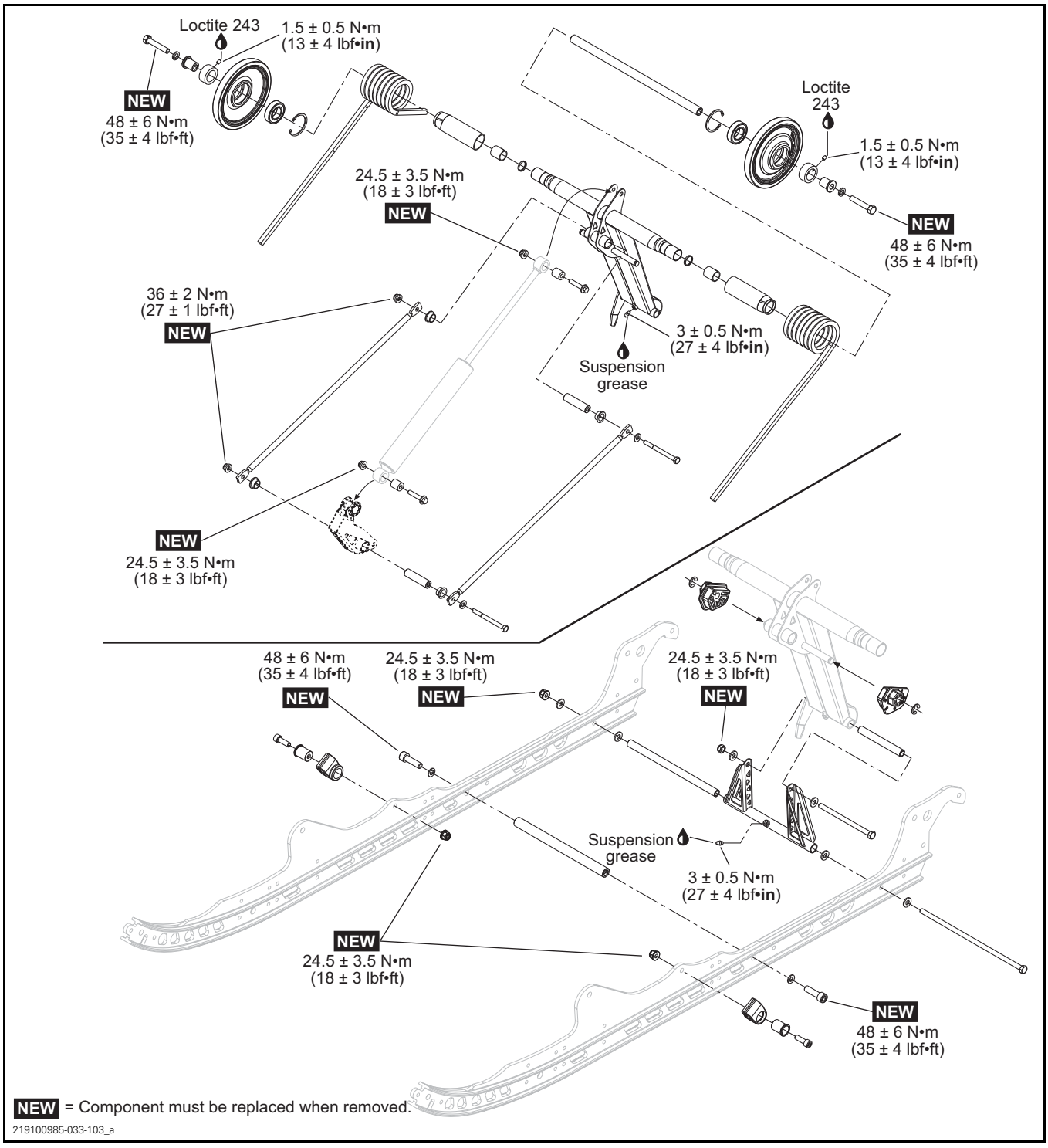
Loctite 243
1.5 ± 0.5 N•m
(13 ± 4 lbf•in)
NEW
48 ± 6 N•m
(35 ± 4 lbf•ft)
24.5 ± 3.5 N•m
(18 ± 3 lbf•ft)
NEW
Loctite
243
1.5 ± 0.5 N•m
(13 ± 4 lbf•in)
NEW
48 ± 6 N•m
(35 ± 4 lbf•ft)
36 ± 2 N•m
(27 ± 1 lbf•ft)
NEW
3 ± 0.5 N•m
(27 ± 4 lbf•in)
Suspension
grease
NEW
24.5 ± 3.5 N•m
(18 ± 3 lbf•ft)
48 ± 6 N•m
(35 ± 4 lbf•ft)
NEW
24.5 ± 3.5 N•m
(18 ± 3 lbf•ft)
NEW
24.5 ± 3.5 N•m
(18 ± 3 lbf•ft)
NEW
Suspension
grease
3 ± 0.5 N•m
(27 ± 4 lbf•in)
NEW
24.5 ± 3.5 N•m
(18 ± 3 lbf•ft)
NEW
48 ± 6 N•m
(35 ± 4 lbf•ft)
NEW = Component must be replaced when removed.
219100985-033-103_a

# SHOCK ABSORBERS

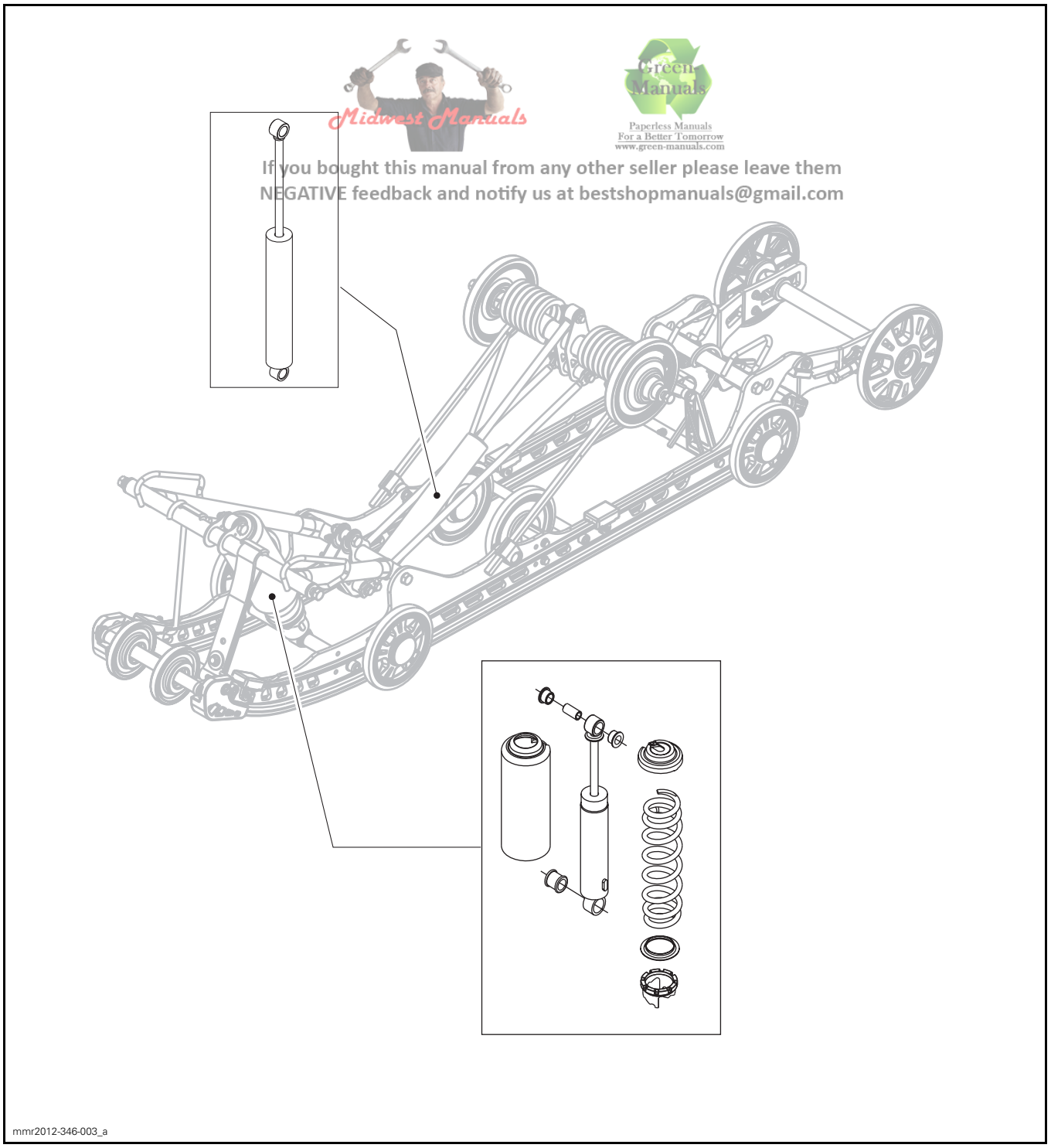


Midwest Manuals
Green Manuals
Paperless Manuals
For a Better Tomorrow
www.green-manuals.com
If you bought this manual from any other seller please leave them
NEGATIVE feedback and notify us at bestshopmanuals@gmail.com

# ADJUSTMENT

For suspension adjustment, refer to *SUSPENSION ADJUSTMENT* subsection.

# MAINTENANCE

## INSPECTING THE REAR SUSPENSION MECHANISM AND STOPPER STRAP

1. Inspect rear suspension components for wear, deterioration or damage, replace defective parts if necessary.
2. Inspect stopper strap(s) for wear or cracks.
3. Check bolt and nut securing strap(s) for tightness. If loose, inspect strap holes for deformation. Replace strap if necessary.

## INSPECTING THE SLIDER SHOES

Slider shoes are worn out and must be replaced when remaining material exceeding the 2 molding lines is as specified.

| MINIMUM SLIDER SHOE THICKNESS |
|---|
| 1 mm (.04 in) material remaining exceeding the 2 molding lines |

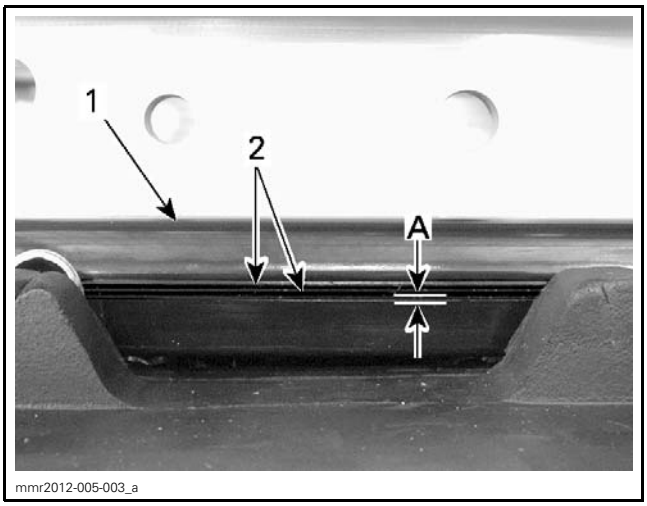

mmr2012-005-003_a

*1. Slider shoe*
*2. Molding lines*
*A. Minimum thickness: 1 mm (.04 in)*

***NOTICE*** Slider shoes must always be replaced in pairs.

## LUBRICATING THE REAR SUSPENSION

Lubricate the following suspension pivots at grease fittings.

| SERVICE PRODUCT |
|---|
| SYNTHETIC SUSPENSION GREASE (P/N 779163) |

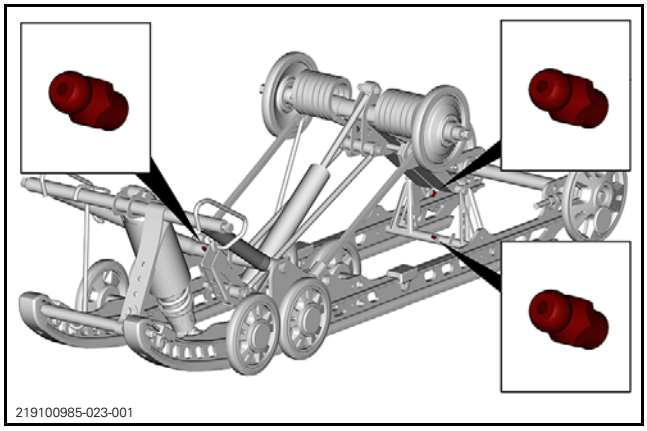
219100985-023-001

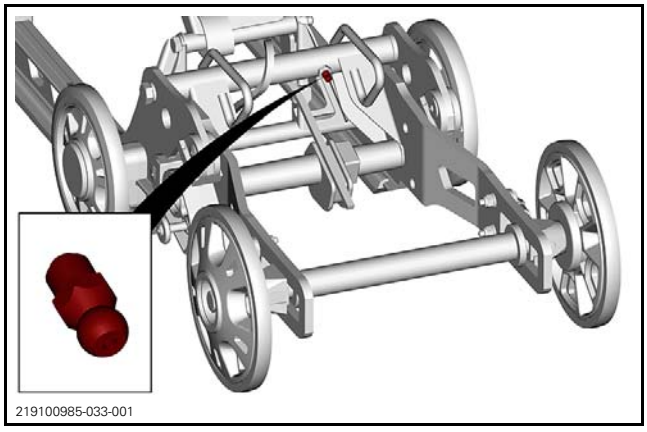
219100985-033-001

# PROCEDURES

NOTE: Parts can be replaced without removing the rear suspension, unless otherwise specified.

## SUSPENSION ASSEMBLY

### Removing Suspension Assembly

1. Lift rear of vehicle and support it off the ground.
2. Completely loosen track tension.

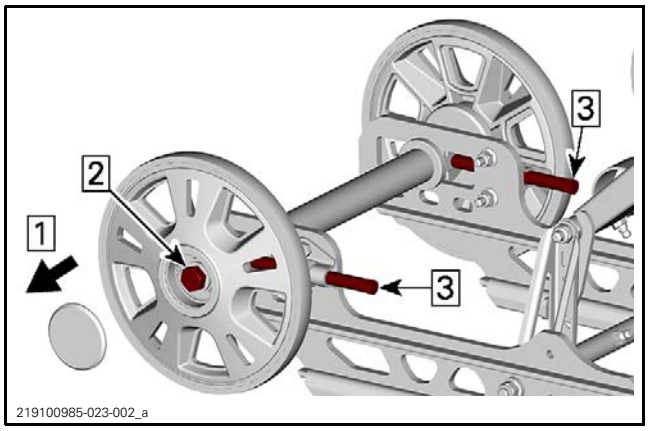


*Step 1: Remove caps*
*Step 2: Loosen one of the axle screws*
*Step 3: Loosen adjustment screws*

3. Remove and discard rear arm bolts from chassis. Use the following procedure to remove bolts easily.

   3.1 Remove one of the bolts securing the rear arm to frame.

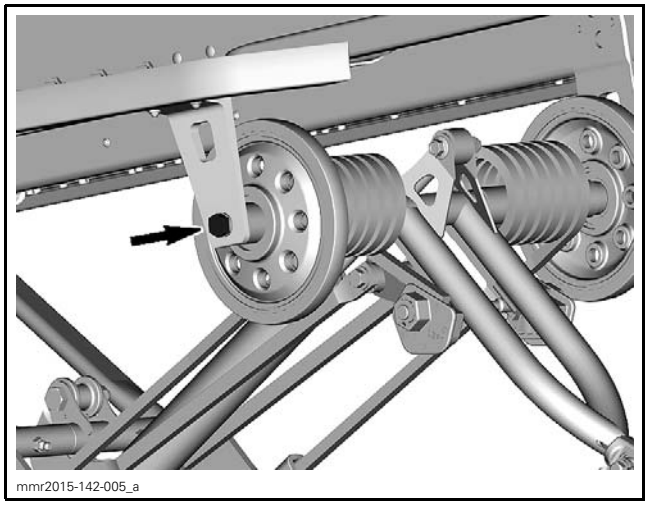


   3.2 Replace this bolt with a longer one and a nut.

   3.3 Screw in by approximately 7 turns.

   3.4 Hold the bolt and tighten locking nut.

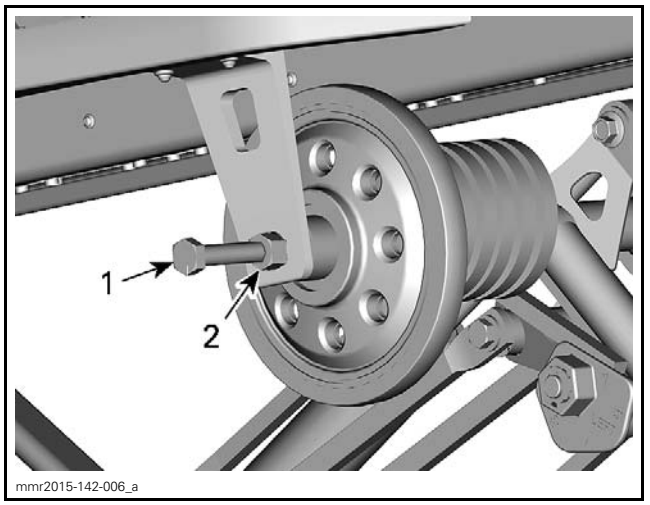


*1. Long bolt*
*2. Locking nut*

   3.5 Remove the bolt on the other side then unlock nut and remove the long bolt.

4. Remove bolts retaining front arm to tunnel the same way rear arm bolts have been removed.

NOTE: Discard the front arm bolts.

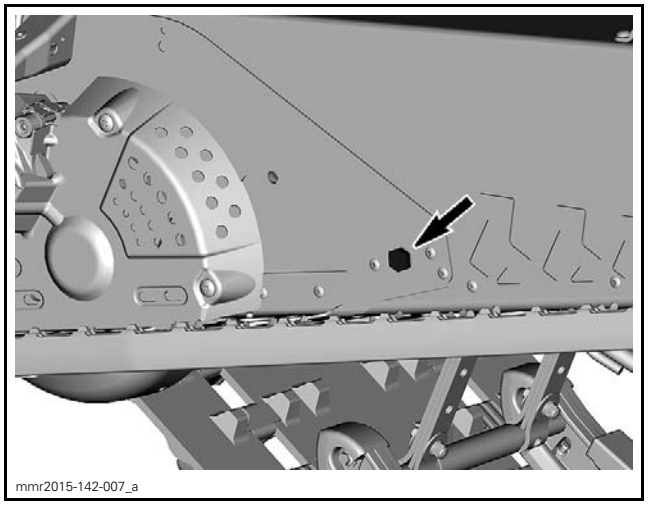


5. Lift rear of vehicle until front arm as enough clearance to pass underneath tunnel.
6. Remove suspension.

## Installing Suspension Assembly

The installation is the reverse of the removal procedure. However, pay attention to the following.

Inspect track thoroughly before reinstalling suspension. Refer to *TRACK* subsection.

Install suspension into track with front end first.

Install new front and rear arm bolts.

Tighten bolts to specification.

| TIGHTENING TORQUE | |
|---|---|
| Front and rear arm upper bolts | 48 N•m ± 6 N•m (35 lbf•ft ± 4 lbf•ft) |

Adjust track tension, refer to *TRACK* subsection.

# REAR AXLE

## Removing the Rear Axle

1. Lift rear of vehicle and support it off the ground.
2. Completely loosen track tension.

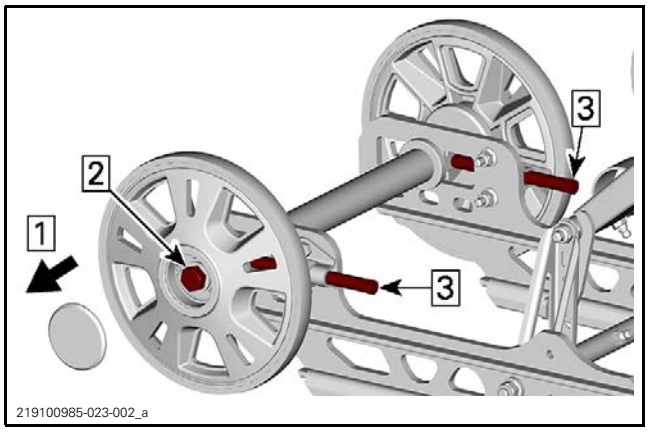


*Step 1: Remove caps*
*Step 2: Loosen one of the axle screws*
*Step 3: Loosen adjustment screws*

3. Remove both rear axle screws.
4. Remove rear idler wheels, seals and wheel spacers.

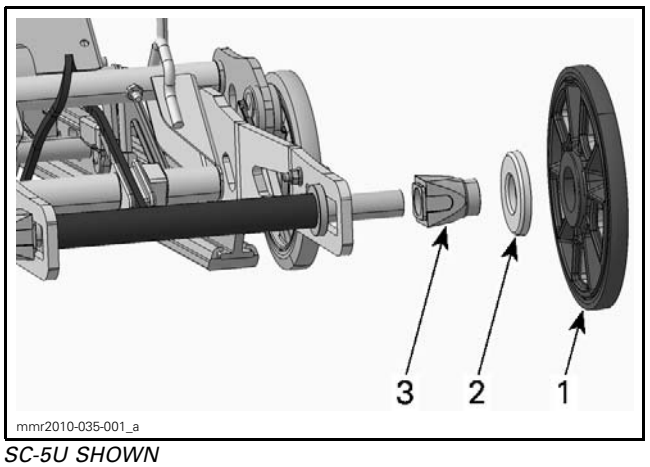


*SC-5U SHOWN*
*1. Rear idler wheel*
*2. Seal*
*3. Wheel spacer*

5. Pull out the rear axle.
6. Remove rear spacer and washers.

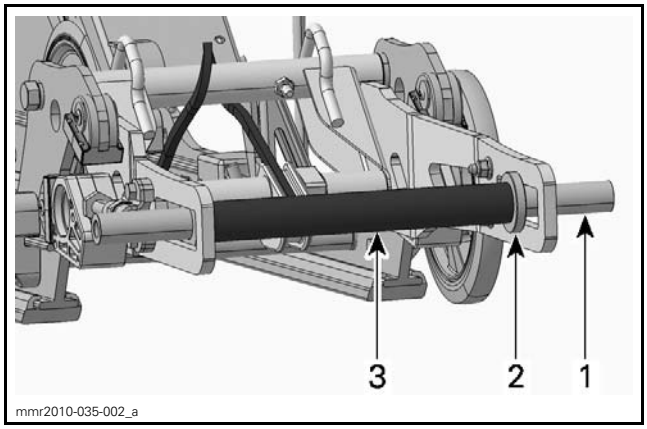


*1. Rear axle*
*2. Washers*
*3. Rear axle spacer*

## Installing the Rear Axle

The installation is reverse of the removal procedure. However, pay attention to the following.

Make sure to position all parts correctly.

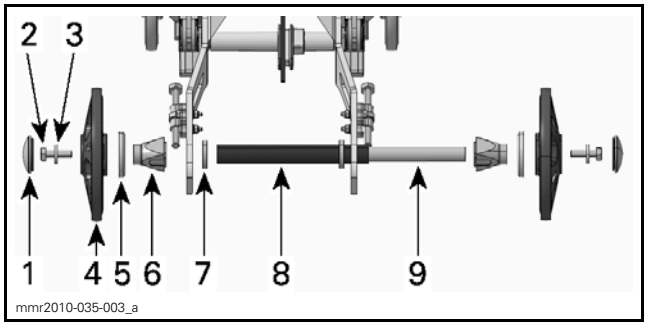


*1. Idler wheel cap*
*2. Rear axle screw*
*3. Rear axle washer*
*4. Idler wheel*
*5. Seal*
*6. Wheel spacer*
*7. Washer*
*8. Rear axle spacer*
*9. Rear axle*

Position wheel spacers with a flat side up and a groove in front of tensioner screw.

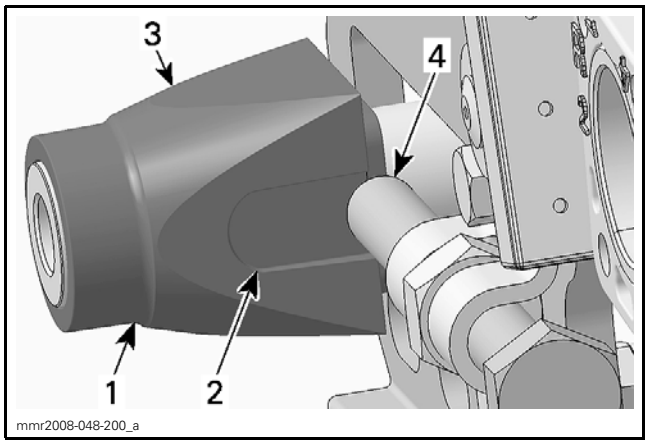

mmr2008-048-200_a

1. *Wheel spacer*
2. *Groove*
3. *Flat side*
4. *Tensioner screw*

When tightening rear axle, make sure each wheel spacer protuberance is engaged into runner slot.

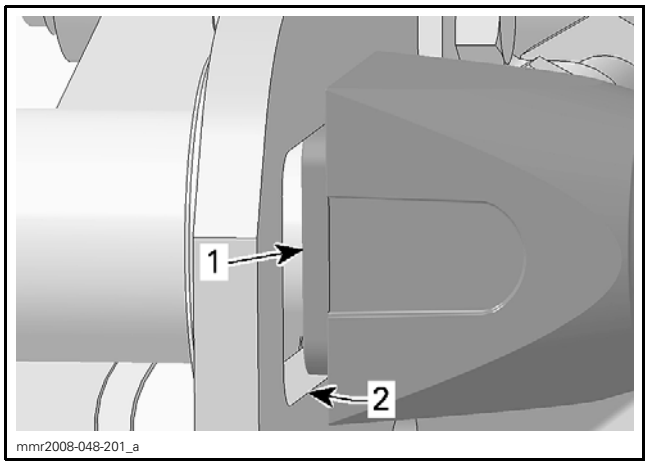

mmr2008-048-201_a

1. *Wheel spacer protuberance*
2. *Runner slot*

Adjust track tension. Refer to *TRACK* subsection.

# REAR EXTENSION

## Removing the Rear Extension

1. Lift rear of vehicle and support it off the ground.
2. Proceed with *REMOVING THE REAR AXLE*. Refer to procedure in this subsection.
3. Unload the spring cam of rear extension by placing it to position 1.

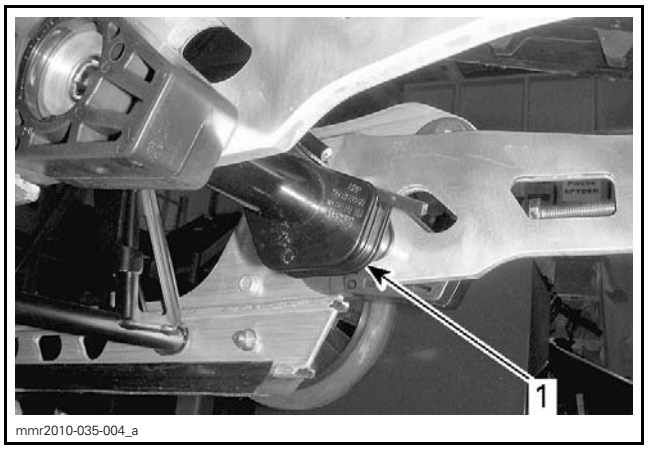

mmr2010-035-004_a

1. *Spring cam set to position 1*

4. Ensure that rear extension is positioned fully downwards (against lower stopper).

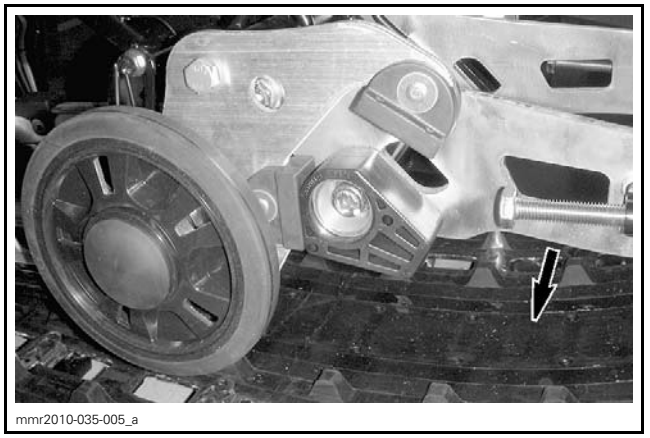
mmr2010-035-005_a

5. Remove retaining screws and washers from rear extension pivot.

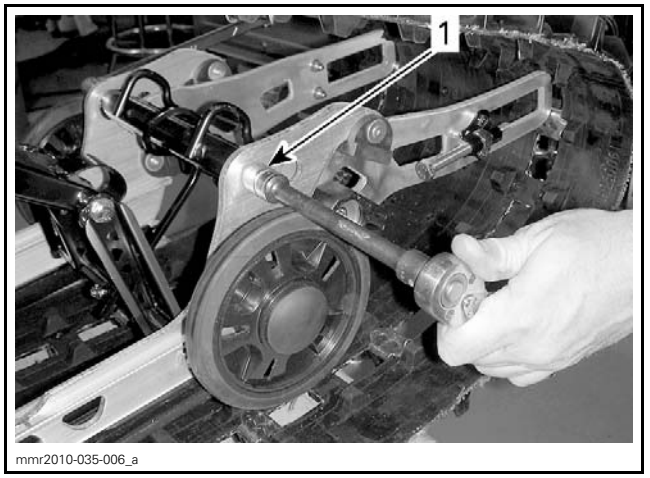

mmr2010-035-006_a

1. *Retaining screw of rear extension pivot*

6. Remove retaining screws and washers from rear extension block.
7. Remove rear extension blocks and spacer.

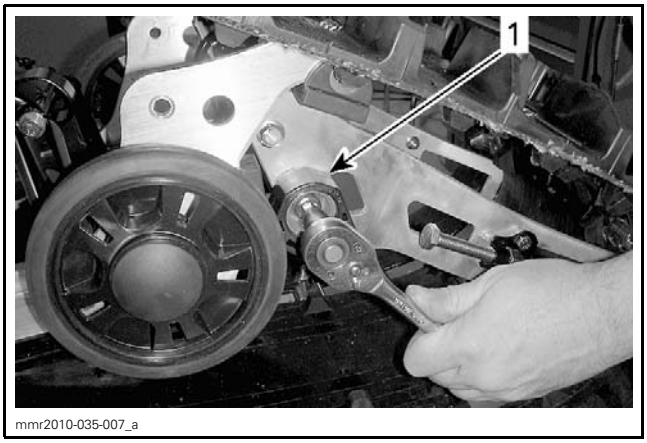


*1. Rear extension block*

8. Rotate rear extension downwards then remove it from rear suspension.

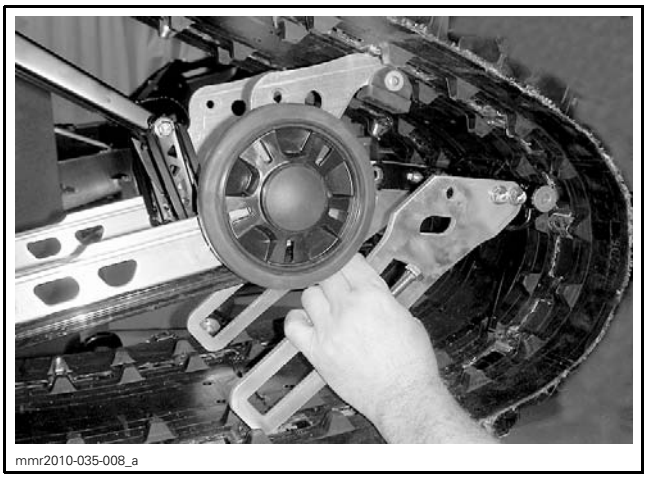


## Installing the Rear Extension

The installation is the reverse of the removal procedure. However, pay attention to the following.

Lubricate rear extension pivot. Refer to *MAINTENANCE* in this subsection.

# SHOCK ABSORBERS

## Removing the Rear Shock Absorber

1. Lift rear of vehicle and support it off the ground.

NOTE: If necessary, to ease shock removal, unfasten stopper strap to release shock pressure.

2. Remove bolts and nuts from shock.

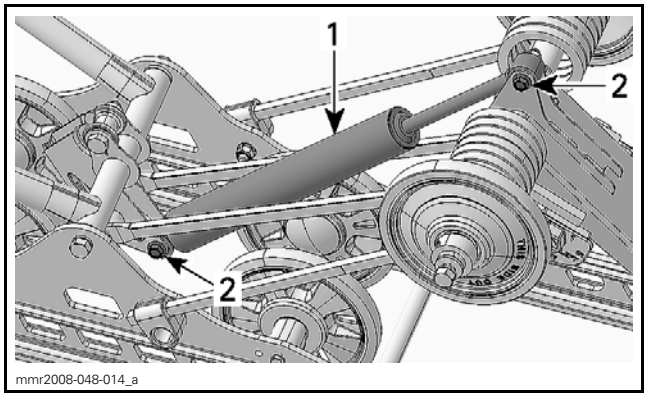


*TYPICAL*
*1. Rear shock absorber*
*2. Remove bolts and nuts*

## Removing the Center Shock Absorber

1. Lift the rear of vehicle and support it off the ground.
2. Unfasten stopper strap.

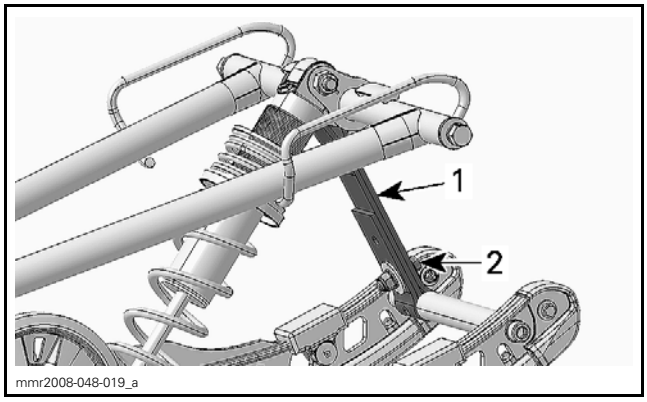


*TYPICAL*
*1. Stopper strap*
*2. Stopper strap bolt*

3. Remove upper and lower shock absorber bolts and nuts.

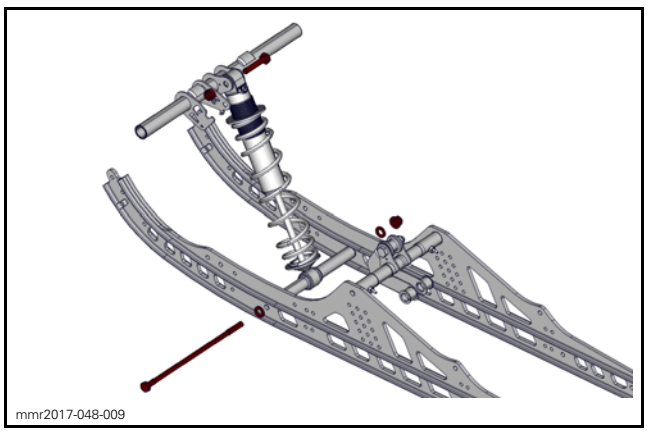


4. Remove shock absorber from vehicle.
5. Remove bushings and shock shaft from shock absorber.

## Inspecting the Shock Absorber

Refer to *REAR SUSPENSION (rMOTION)* subsection for complete procedures.

## Installing the Rear Shock Absorber

The installation is the reverse of the removal procedure. However, pay attention to the following.

To ease shock installation, secure upper side of shock first.

Install **NEW** shock absorber retaining nuts and tighten to specification.

| TIGHTENING TORQUE | |
|---|---|
| Rear shock absorber retaining nuts | 24.5 N•m ± 3.5 N•m (18 lbf•ft ± 3 lbf•ft) |

## Installing the Center Shock Absorber

The installation is the reverse of the removal procedure. However, pay attention to the following.

1. Position the adjustment ring or cam downwards.

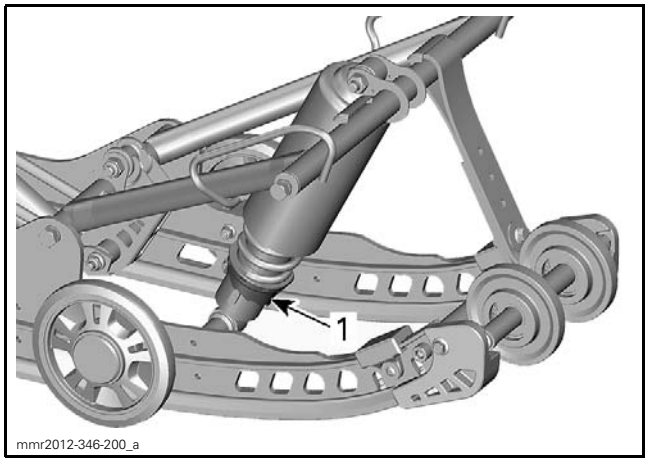


*TYPICAL*
*1. Cam*

2. Using **NEW** socket screws, install shock shaft to runners.
3. Position washers in proper position.

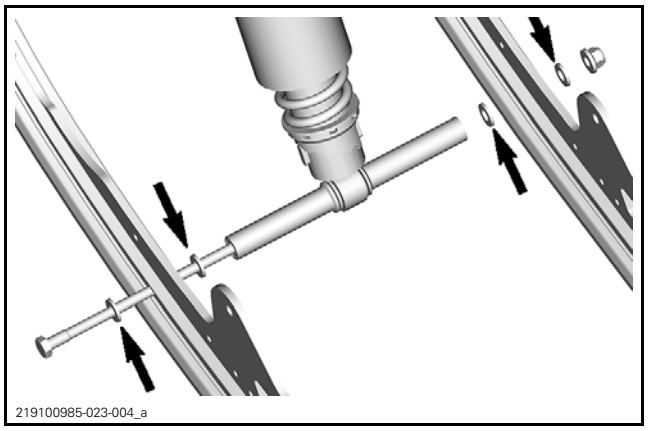


Tighten nut to specification.

| TIGHTENING TORQUE | |
|---|---|
| Center shock shaft retaining nut | 70 N•m ± 10 N•m (52 lbf•ft ± 7 lbf•ft) |

# REAR SPRINGS

## Removing the Rear Spring

1. Lift rear of vehicle and support it off the ground.
2. Completely loosen track tension.

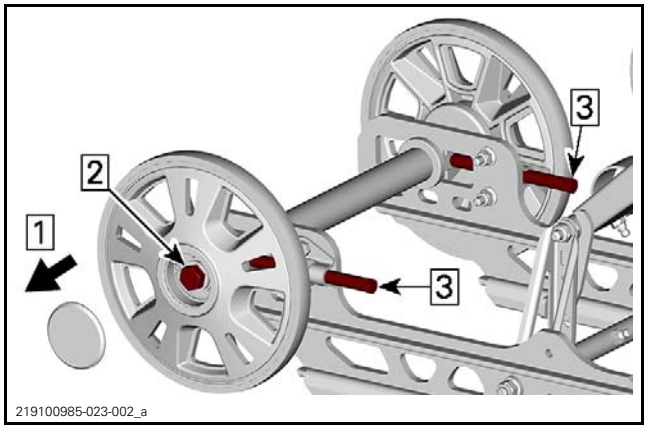


*Step 1: Remove caps*
*Step 2: Loosen one of the axle screws*
*Step 3: Loosen adjustment screws*

3. Decrease springs preload by turning cams accordingly.

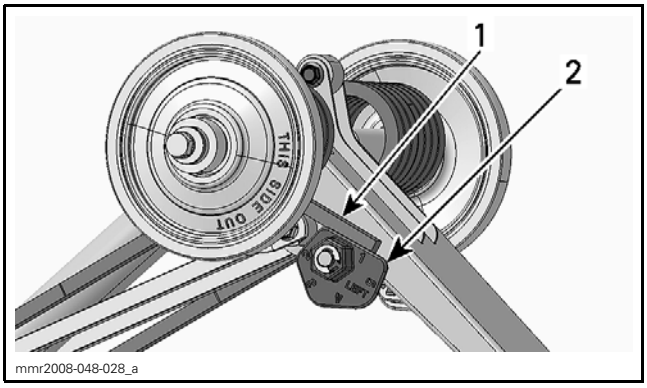

mmr2008-048-028_a

*LH SIDE SHOWN*
1. *Rear spring*
2. *Cam*

4. Firmly hold the spring support and unscrew its retaining bolt (one each side).

**⚠ WARNING**

**Supports are spring loaded.**

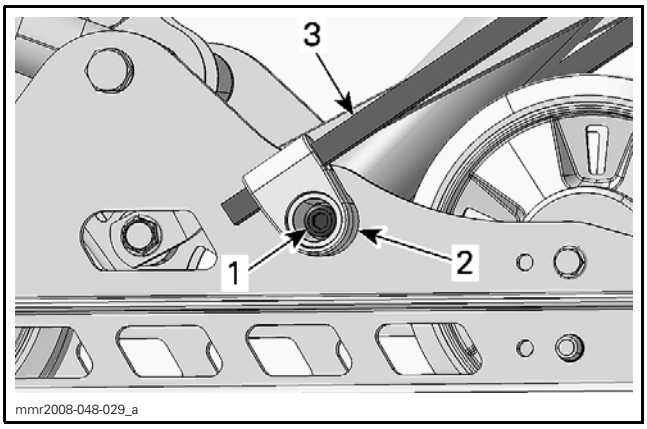

mmr2008-048-029_a

1. *Spring support bolt*
2. *Spring support*
3. *Spring*

5. Remove screws and washers from rear arm top axle.
6. Loosen set screw from locking rings.
7. Remove locking rings.
8. Remove upper idler wheels.
9. Remove springs.

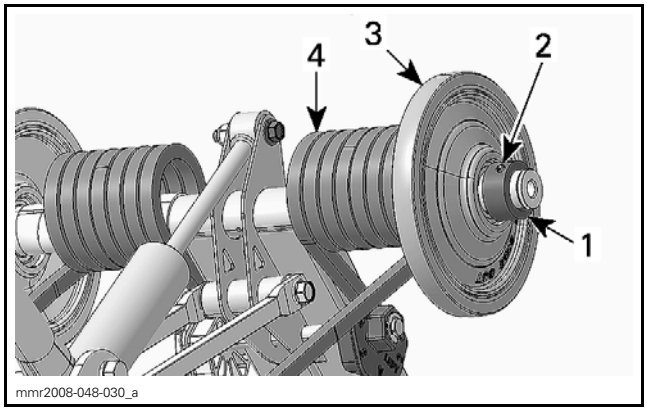

mmr2008-048-030_a

*LH SIDE SHOWN*
1. *Locking ring*
2. *Set screw*
3. *Upper idler wheel*
4. *Rear spring*

## Installing the Rear Spring

The installation is the reverse of the removal procedure. However, pay attention to the following.

1. Respect THIS SIDE OUT inscription on top idler wheels.
2. Make sure that spring end is in cam adjuster.

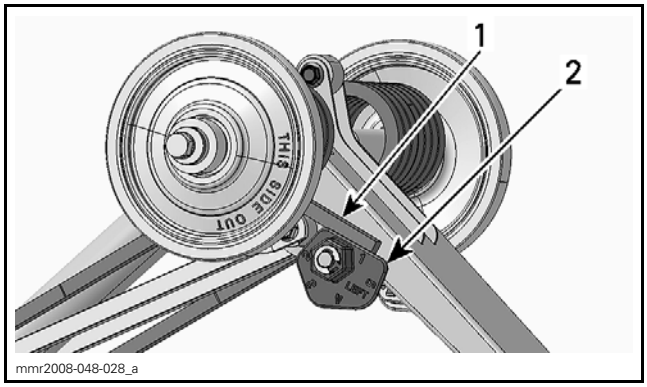

mmr2008-048-028_a

*LH SIDE SHOWN*
1. *Spring end*
2. *Cam*

3. Install spring supports upwards.

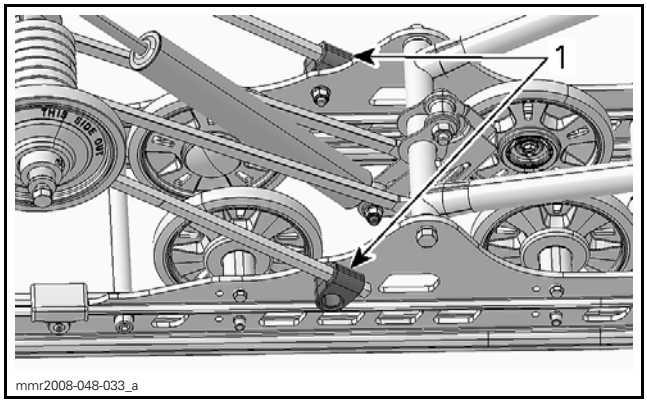

mmr2008-048-033_a

*TYPICAL*
1. *Spring supports upwards*

# SLIDER SHOES

## Removing the Slider Shoe

1. Lift rear of vehicle and support it off the ground.
2. Completely loosen track tension.

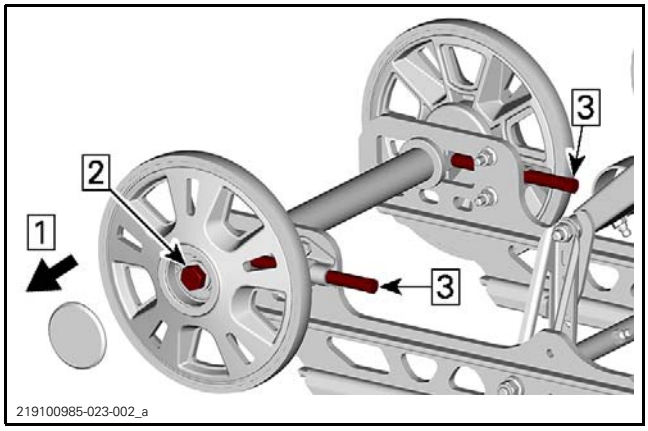


*Step 1: Remove caps*
*Step 2: Loosen one of the axle screws*
*Step 3: Loosen adjustment screws*

3. Remove nut and screw of each runner.

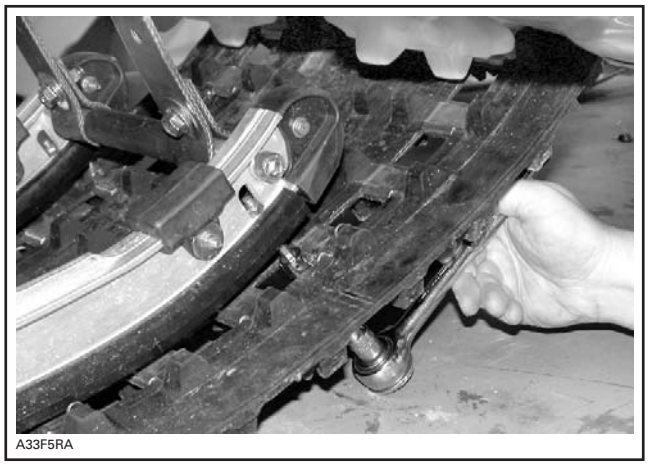


*REMOVE NUT AND SCREW OF EACH RUNNER*

4. At the rear of vehicle, align a track window with slider shoe.

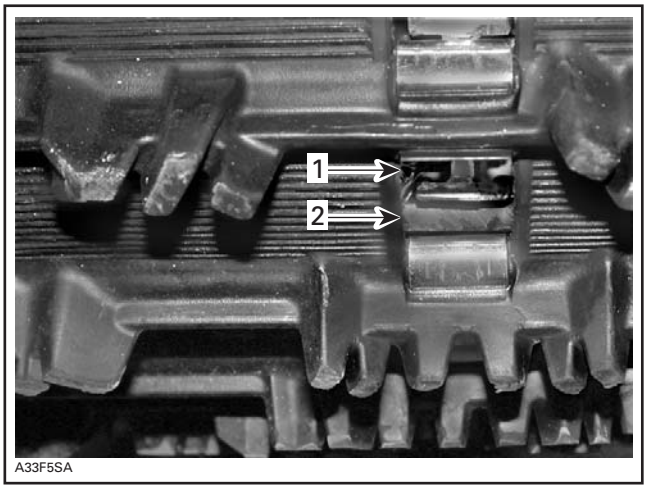


*TYPICAL*
*1. Track window*
*2. Slider shoe*

5. Using a pry bar or a screwdriver, push slider shoe rearward until it comes in contact with track.

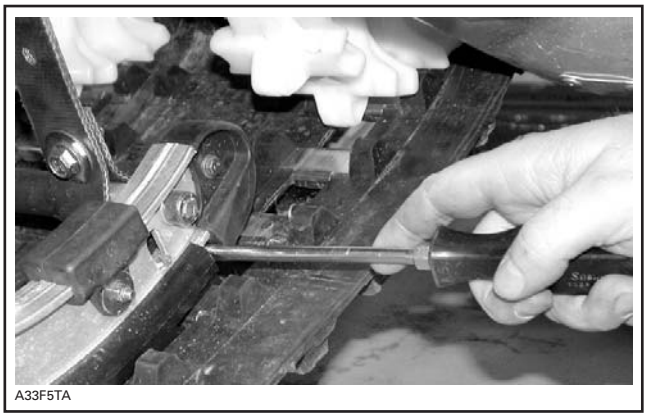


*PUSH ON SLIDER SHOE*

6. Using locking pliers, pull slider shoe through track window to remove.

NOTE: If necessary, lubricate track window to facilitate slider shoe removal.

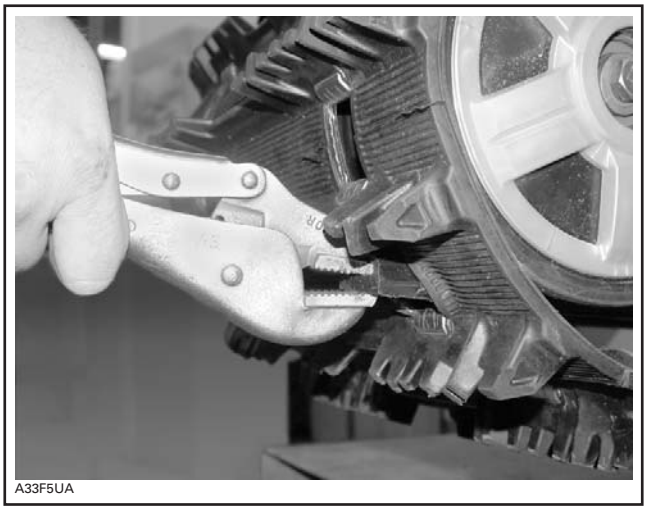


*PULL ON SLIDER SHOE TO REMOVE*

### Installing the Slider Shoe

The installation is the reverse of the removal procedure. However, pay attention to the following.

Make sure to insert slider shoe end with hole first.

## FRONT ARM

### Removing the Front Arm

1. Proceed with *REMOVING THE SUSPENSION ASSEMBLY*. Refer to procedure in this subsection.
2. Remove the bolt securing rocker to front arm.

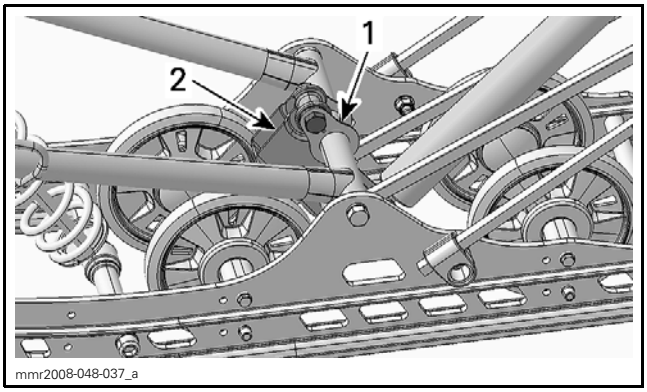


*1. Front arm*
*2. Rocker*

3. Unscrew and remove the front arm lower bolts and washers.

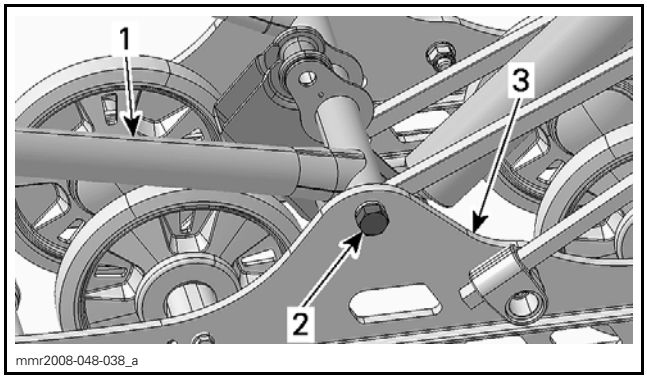


*1. Front arm*
*2. Lower bolt*
*3. LH runner*

4. Remove the shock absorber upper bolt.

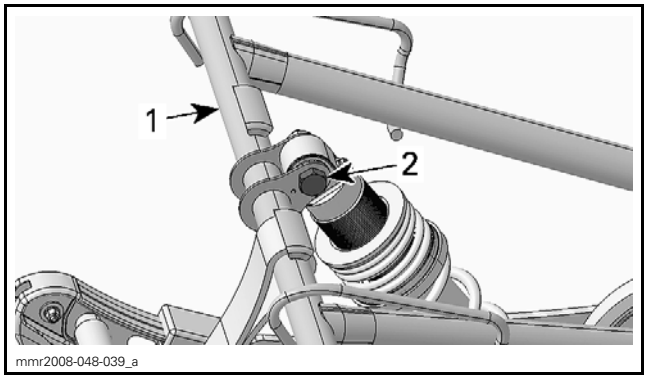


*1. Front arm*
*2. Shock absorber upper bolt*

5. Unfasten stopper strap.

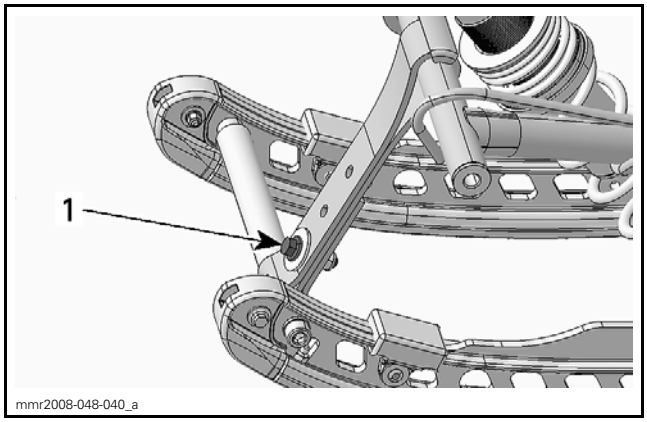


*1. Stopper strap bolt*

6. Remove and discard front arm upper bolts.

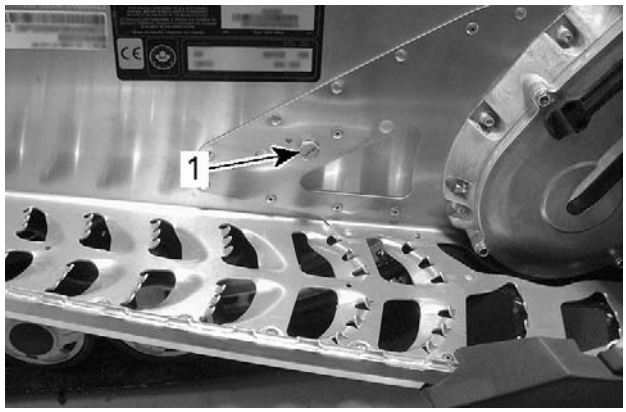


*1. Bolt*

7. Remove front arm.

## Installing the Front Arm

The installation is the reverse of the removal procedure. However, pay attention to the following.

Install **NEW** front arm lower bolts.

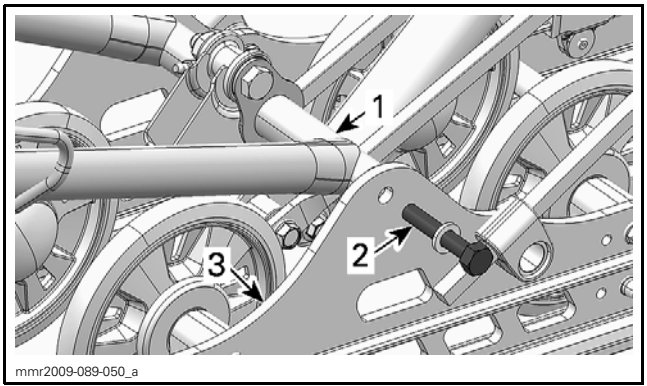


*1. Front arm*
*2. Front arm lower bolt (LH side)*
*3. Runner*

Tighten screws to specification.

| TIGHTENING TORQUE | |
|---|---|
| Front arm lower bolts | 61 N•m ± 9 N•m (45 lbf•ft ± 7 lbf•ft) |

# REAR ARM

## Removing the Rear Arm

1. Lift rear of vehicle and support it off the ground.
2. Completely loosen track tension.

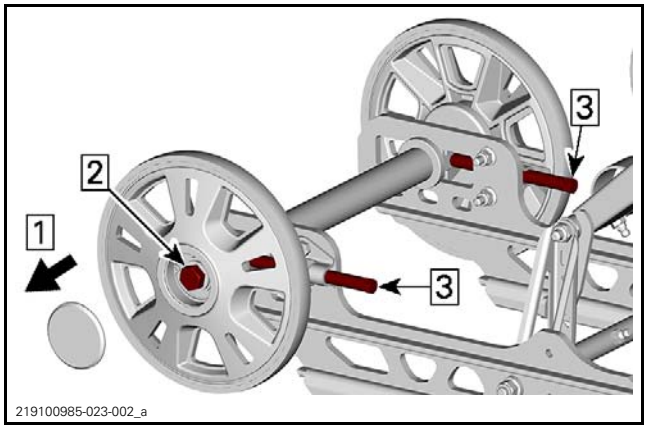


*Step 1: Remove caps*
*Step 2: Loosen one of the axle screws*
*Step 3: Loosen adjustment screws*

3. Proceed with *REMOVING THE REAR SPRING*. Refer to procedure in this subsection.
4. Remove the rear shock absorber upper bolt.

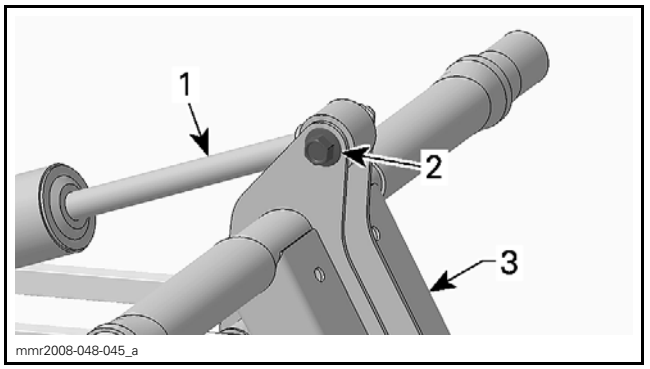


*1. Rear shock absorber*
*2. Shock absorber bolt*
*3. Rear arm*

5. Remove throttle rods from rear arm.

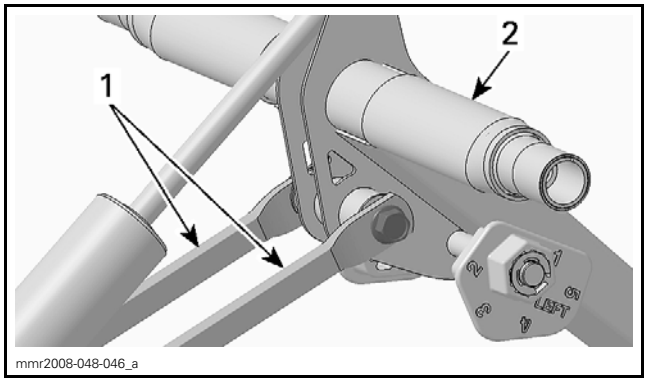


*1. Throttle rods*
*2. Rear arm*

6. Remove bolts and washers holding rear arm to pivot arm.

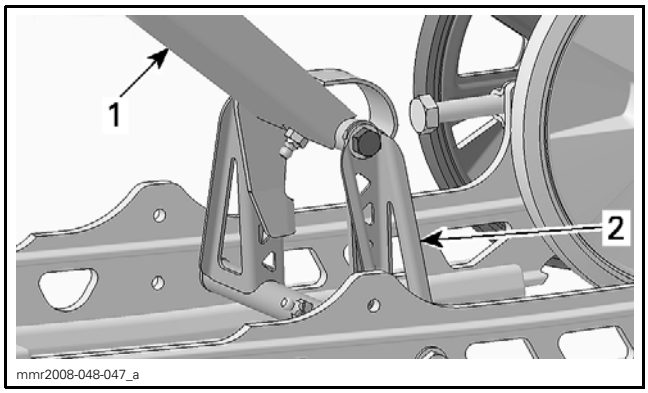


1. *Rear arm*
2. *Pivot arm*

## Installing the Rear Arm

The installation is the reverse of the removal procedure. However, pay attention to the following.

Pivot arm grease fitting must be towards the front of the vehicle.

At installation, rear arm stroke limiter must be towards rear.

Assemble rear arm fasteners as per following illustrations.

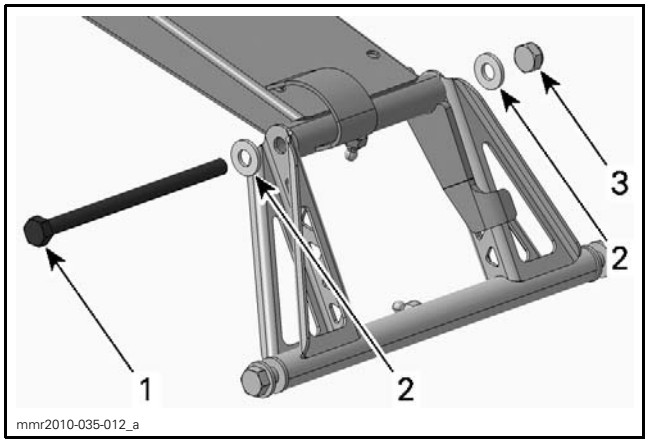


*SOME PARTS REMOVED FOR CLARITY PURPOSE*
1. *Rear arm lower bolt*
2. *Washers*
3. *Rear arm lower nut*

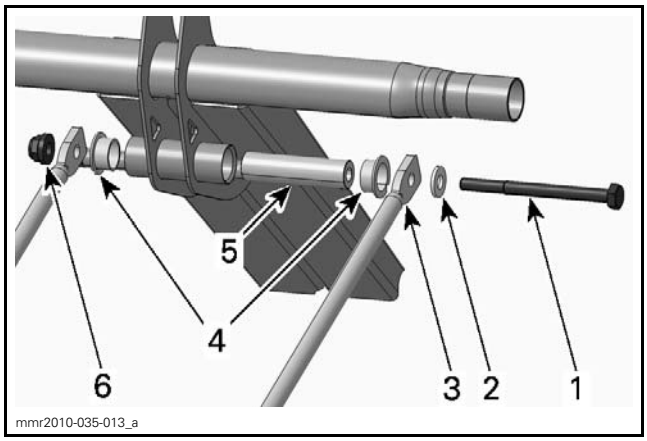


*SOME PARTS REMOVED FOR CLARITY PURPOSE*
1. *Throttle rod upper bolt*
2. *Washer*
3. *Throttle rod*
4. *Bushings*
5. *Axle*
6. *Throttle rod upper nut*

Refer to exploded view for new fasteners to install and tightening torques.

Lubricate rear arm pivot. Refer to *MAINTENANCE*.

# PIVOT ARM

## Removing the Pivot Arm

1. Lift rear of vehicle and support it off the ground.
2. Completely loosen track tension.

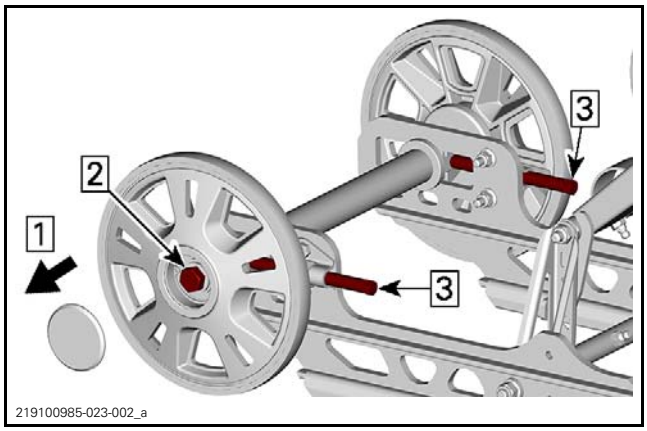


*Step 1: Remove caps*
*Step 2: Loosen one of the axle screws*
*Step 3: Loosen adjustment screws*

3. Remove bolt and washers retaining rear arm to pivot arm.

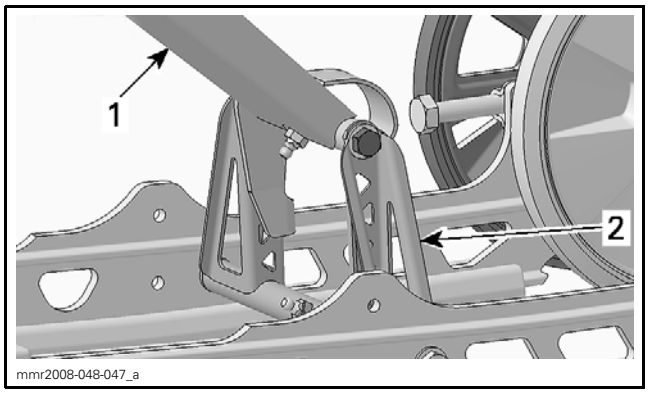


1. *Rear arm*
2. *Pivot arm*

4. Remove bolt and washers retaining pivot arm to runners.

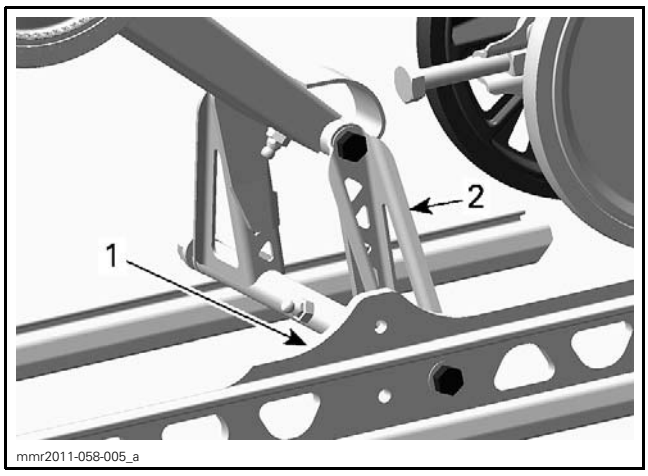


1. *Runner*
2. *Pivot arm*

5. Carefully remove pivot arm from rear arm.

### Installing the Pivot Arm

The installation is the reverse of the removal procedure. However, pay attention to the following.

Assemble pivot arm fastener as per following illustrations.

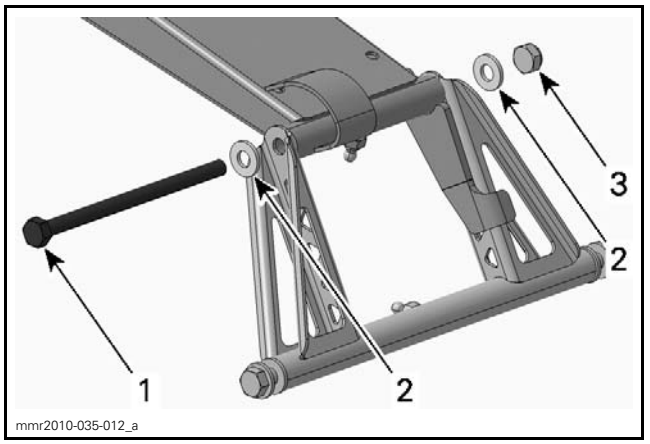


*SOME PARTS REMOVED FOR CLARITY PURPOSE*
1. *Rear arm lower bolt*
2. *Washers*
3. *Rear arm lower nut*

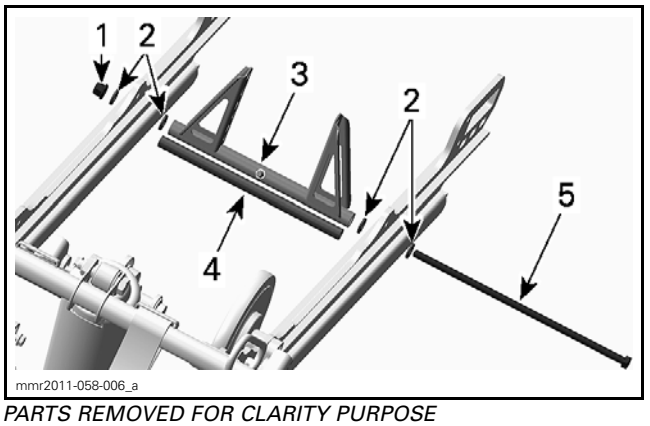


*PARTS REMOVED FOR CLARITY PURPOSE*
1. *Pivot arm lower nut*
2. *Washers*
3. *Pivot arm*
4. *Axle*
5. *Pivot arm lower screw*

Refer to exploded view for new fasteners to install and tightening torques.

Lubricate pivot arm. Refer to *MAINTENANCE*.

## IDLER WHEELS AND SUPPORTS

Refer to the exploded views at the beginning of this subsection for parts layout and fasteners tightening torque.

## STOPPER STRAP

Refer to the exploded views at the beginning of this subsection for parts layout and fasteners tightening torque.

# REAR SUSPENSION (ALL EXCEPT EFI)

## SERVICE PRODUCTS

| Description | Part Number | Page |
|---|---|---|
| SYNTHETIC SUSPENSION GREASE | 779163 | 566 |

## RAILS AND IDLER WHEELS

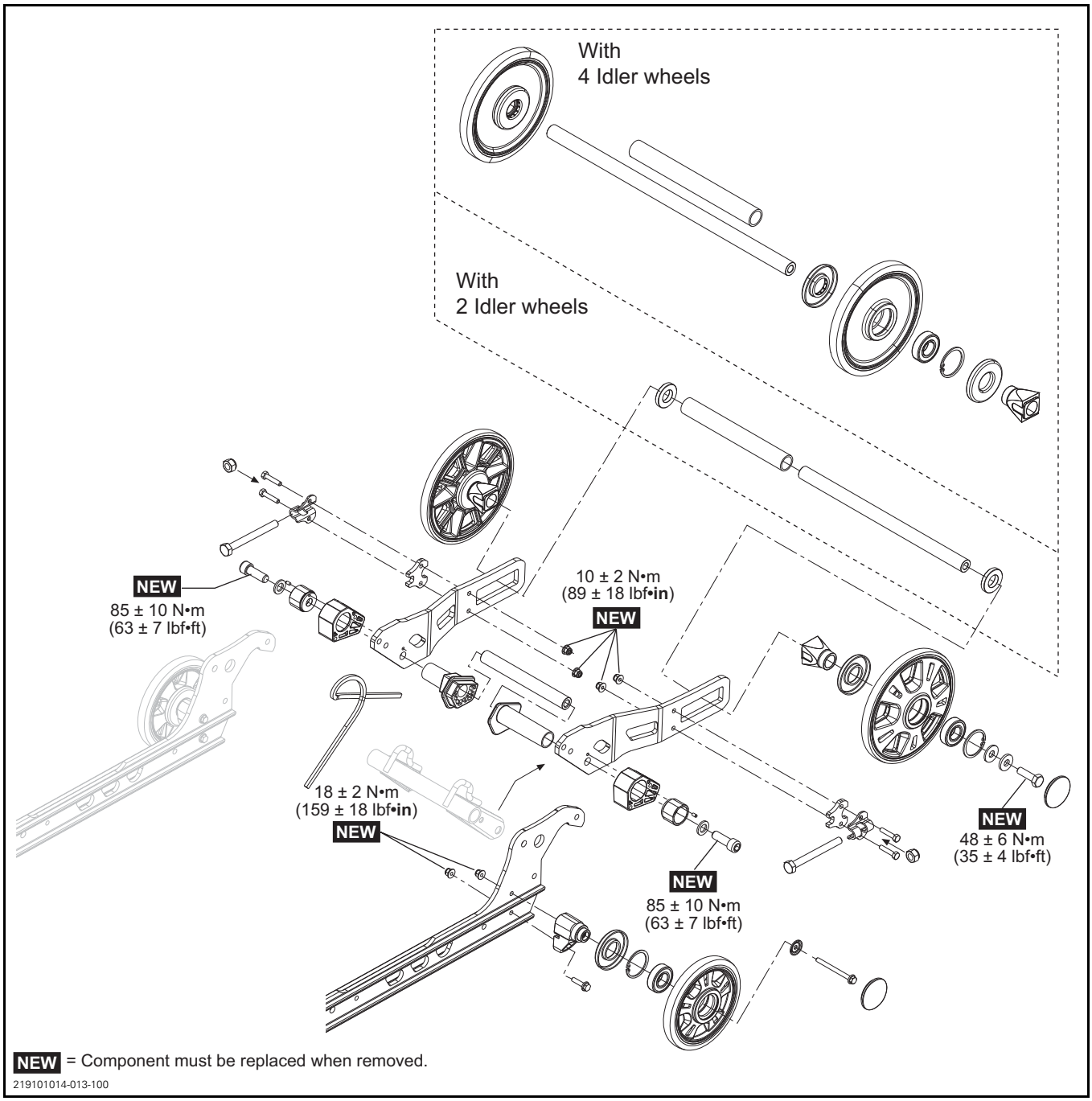

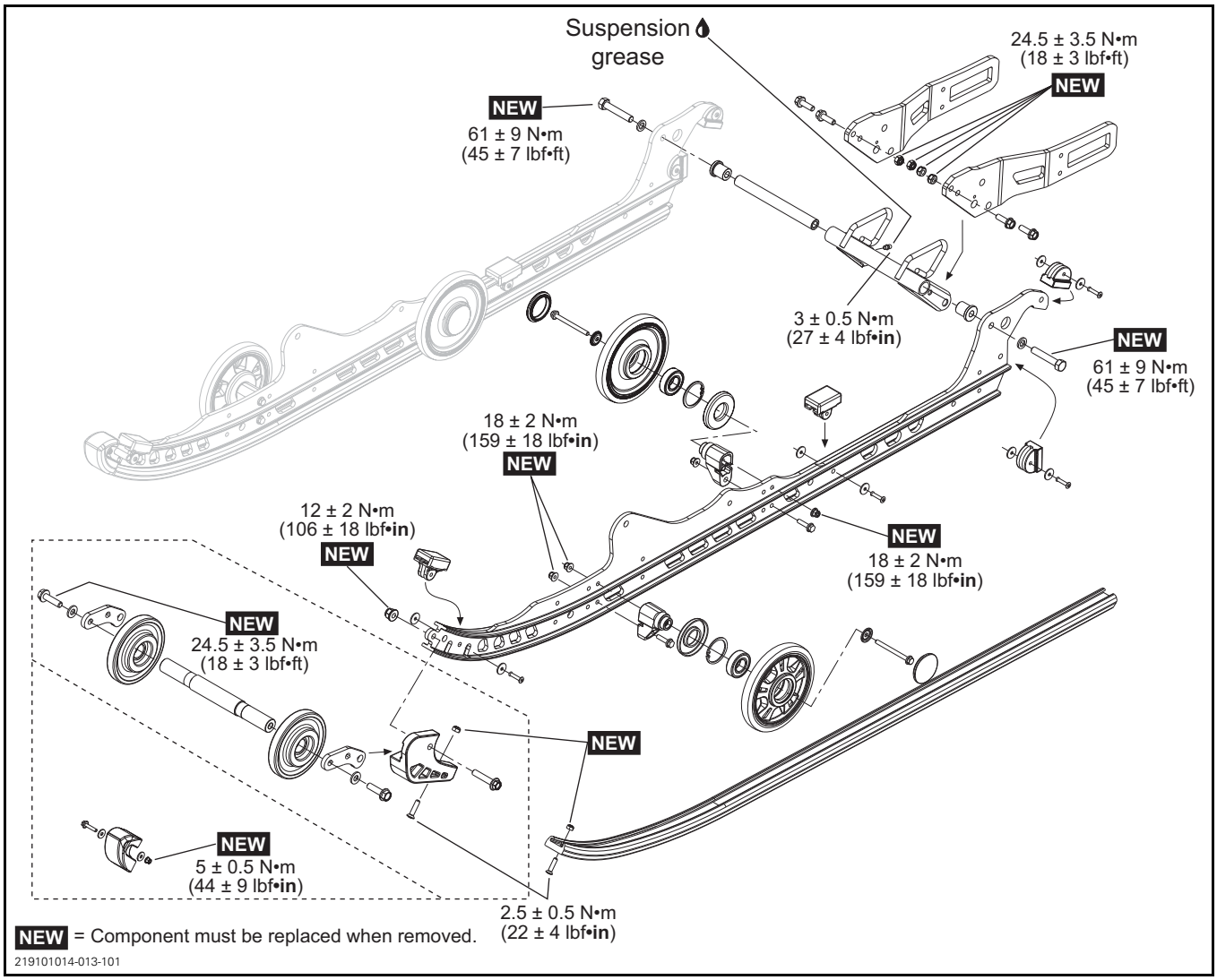
Suspension grease
24.5 ± 3.5 N•m
(18 ± 3 lbf•ft)
NEW
NEW
61 ± 9 N•m
(45 ± 7 lbf•ft)
3 ± 0.5 N•m
(27 ± 4 lbf•in)
NEW
61 ± 9 N•m
(45 ± 7 lbf•ft)
18 ± 2 N•m
(159 ± 18 lbf•in)
NEW
12 ± 2 N•m
(106 ± 18 lbf•in)
NEW
NEW
18 ± 2 N•m
(159 ± 18 lbf•in)
NEW
24.5 ± 3.5 N•m
(18 ± 3 lbf•ft)
NEW
NEW
5 ± 0.5 N•m
(44 ± 9 lbf•in)
2.5 ± 0.5 N•m
(22 ± 4 lbf•in)
NEW = Component must be replaced when removed.
219101014-013-101

# FRONT ARM

*16in Wide Suspension*

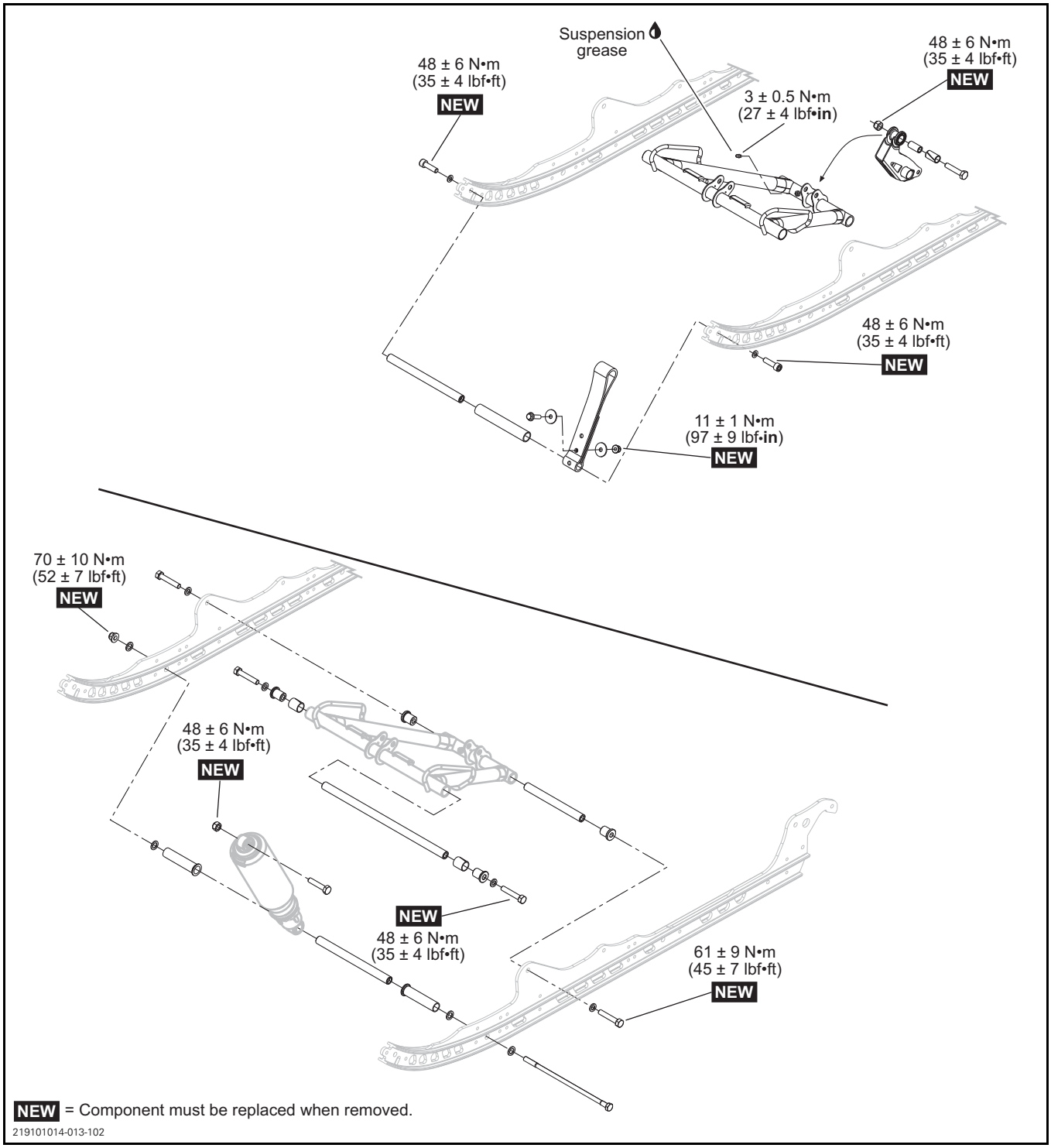

*20in Wide Suspension*

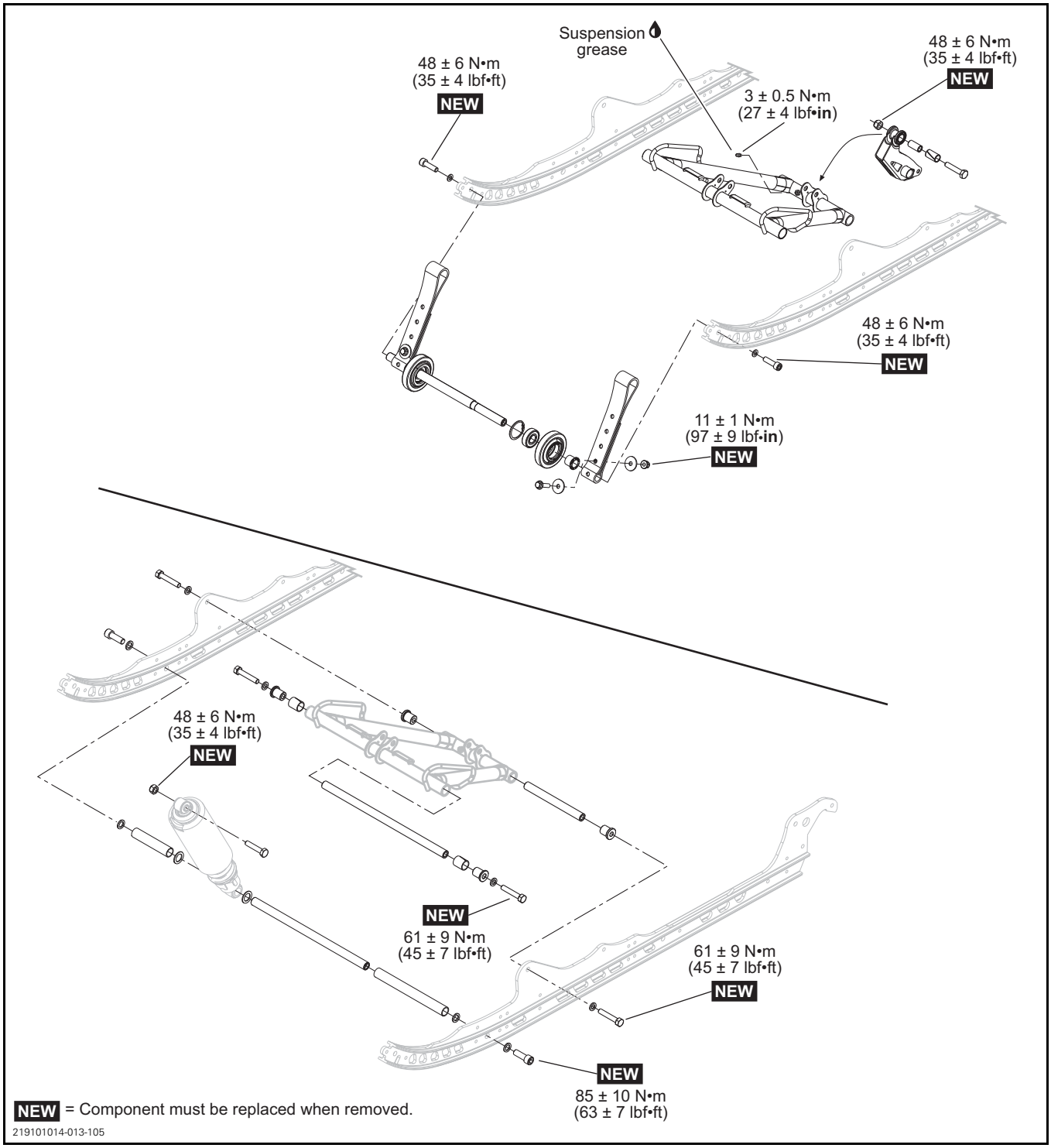

# REAR ARM

*16in Wide Suspension*

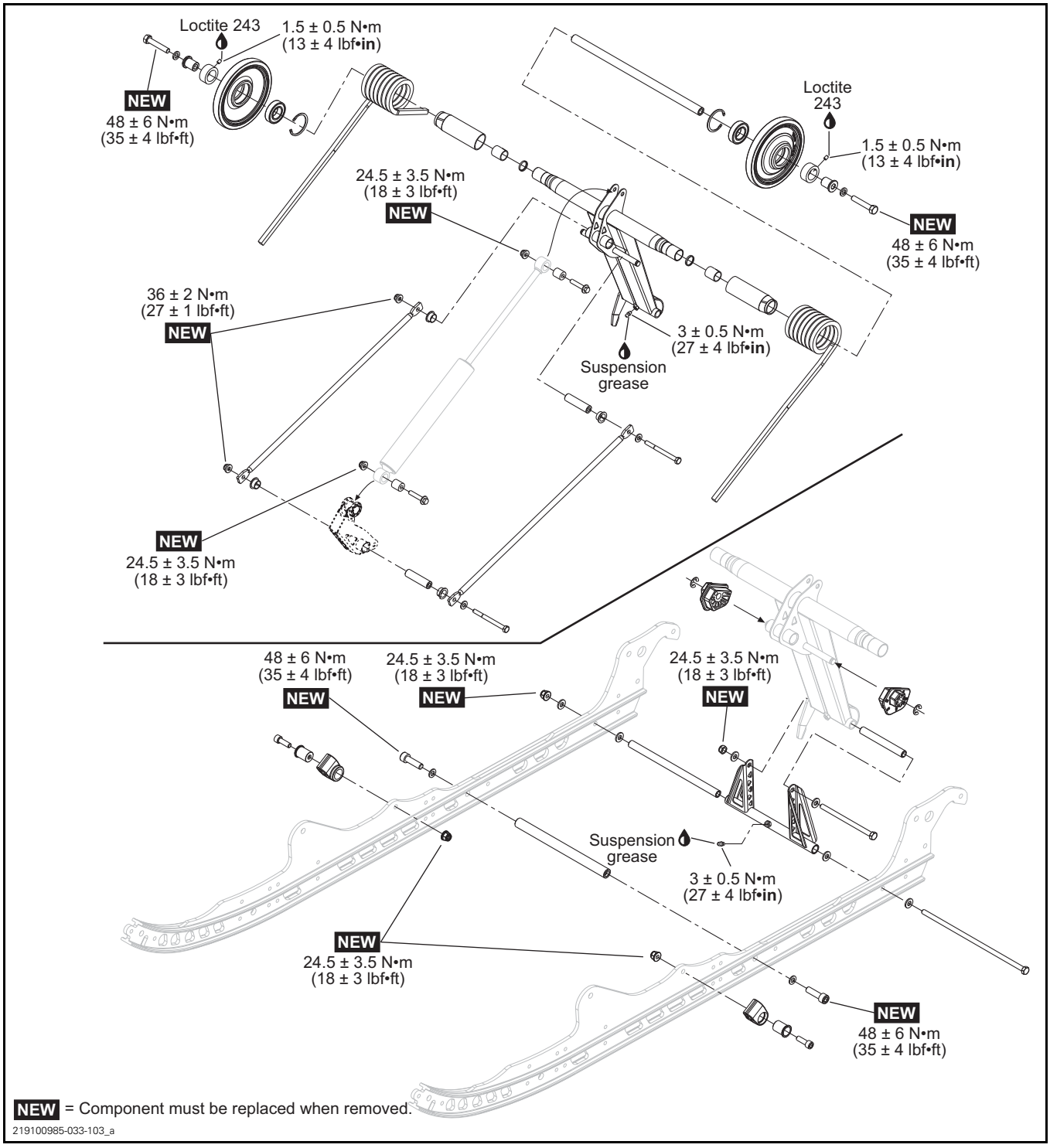

*20in Wide Suspension*

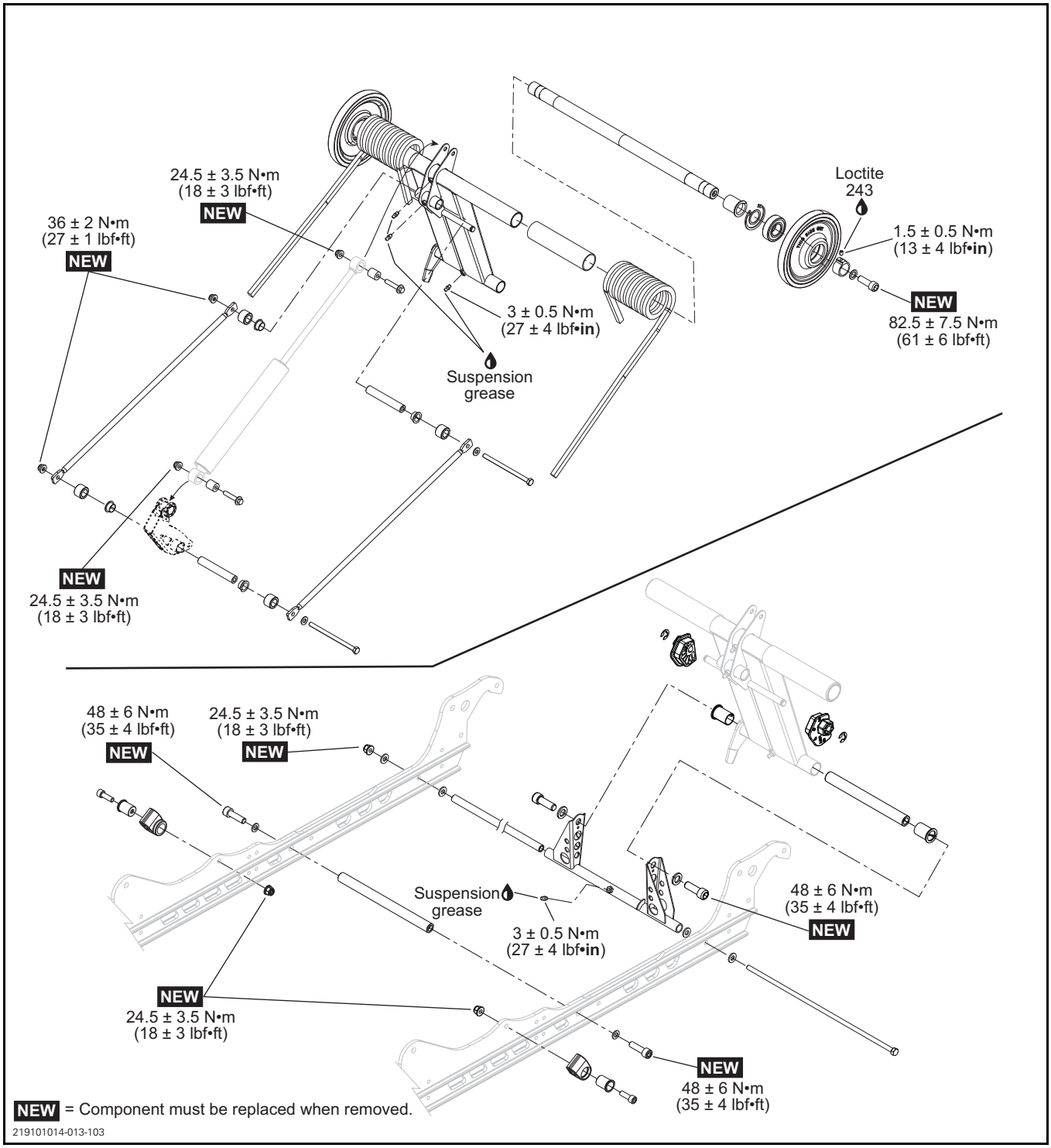

# SHOCK ABSORBERS

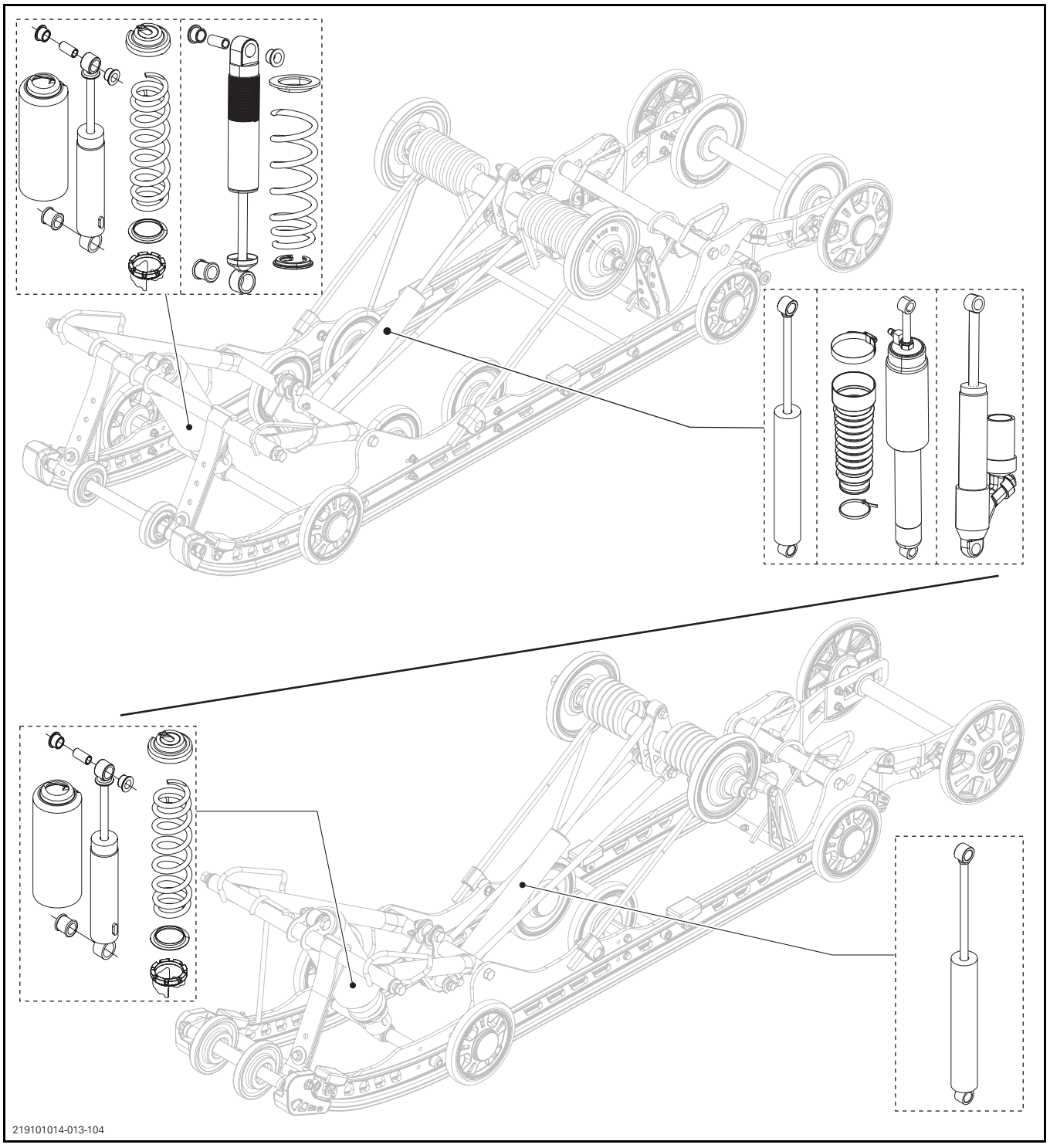

# ADJUSTMENT

For suspension adjustment, refer to *SUSPENSION ADJUSTMENT* subsection.

# MAINTENANCE

## INSPECTING THE REAR SUSPENSION MECHANISM AND STOPPER STRAP

1. Inspect rear suspension components for wear, deterioration or damage, replace defective parts if necessary.
2. Inspect stopper strap(s) for wear or cracks.
3. Check bolt and nut securing strap(s) for tightness. If loose, inspect strap holes for deformation. Replace strap if necessary.

## INSPECTING THE SLIDER SHOES

Slider shoes are worn out and must be replaced when remaining material exceeding the 2 molding lines is as specified.

| MINIMUM SLIDER SHOE THICKNESS |
|---|
| 1 mm (.04 in) material remaining exceeding the 2 molding lines |

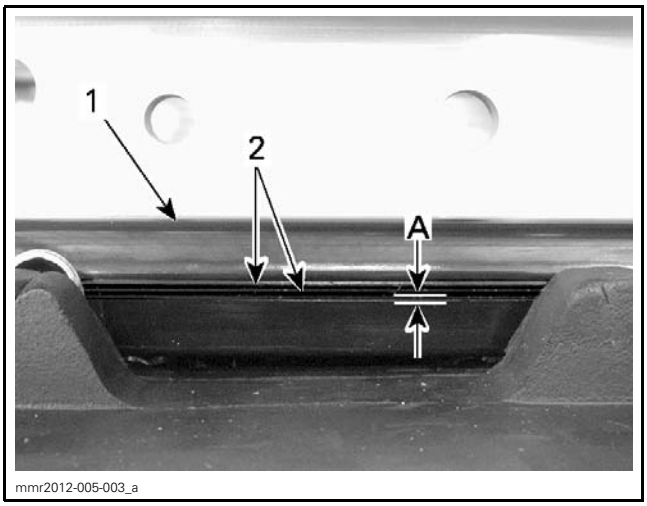


*1. Slider shoe*
*2. Molding lines*
*A. Minimum thickness: 1 mm (.04 in)*

**NOTICE** Slider shoes must always be replaced in pairs.

## LUBRICATING THE REAR SUSPENSION

Lubricate the following suspension pivots at grease fittings.

| SERVICE PRODUCT |
|---|
| SYNTHETIC SUSPENSION GREASE (P/N 779163) |

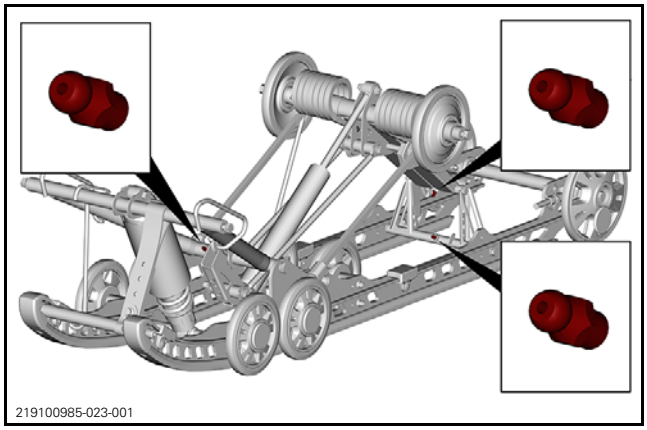


*16in WIDE SUSPENSION*

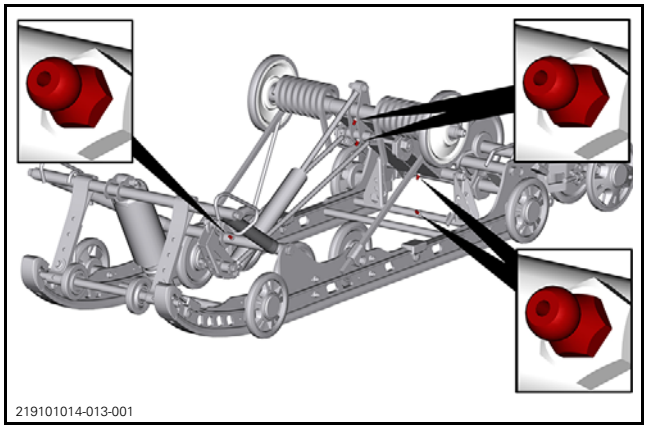


*20in WIDE SUSPENSION*

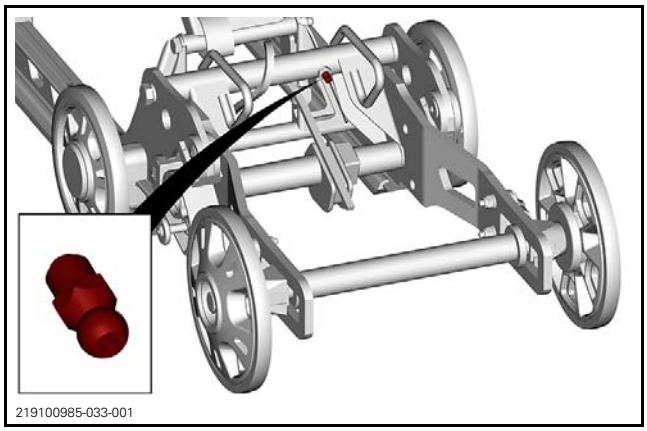

# PROCEDURES

NOTE: Parts can be replaced without removing the rear suspension, unless otherwise specified.

## SUSPENSION ASSEMBLY

### Removing Suspension Assembly

1. Lift rear of vehicle and support it off the ground.
2. Completely loosen track tension.

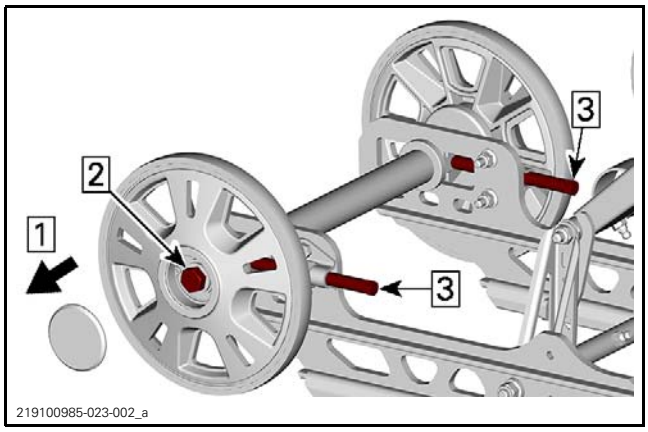


*Step 1: Remove caps*
*Step 2: Loosen one of the axle screws*
*Step 3: Loosen adjustment screws*

3. Remove and discard rear arm bolts from chassis. Use the following procedure to remove bolts easily.
   3.1 Remove one of the bolts securing the rear arm to frame.

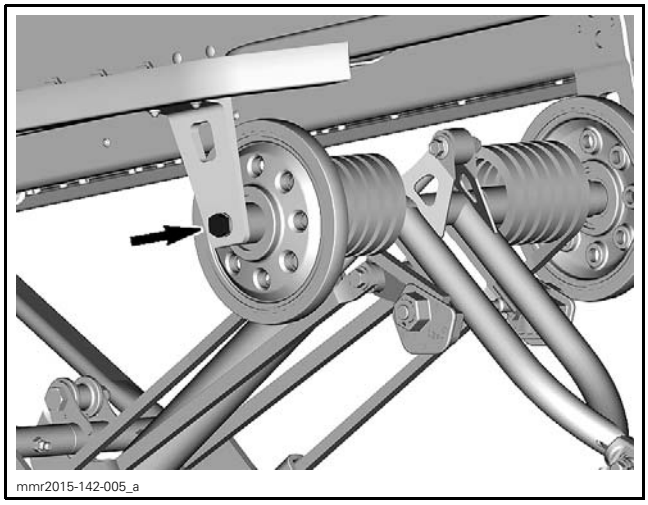


   3.2 Replace this bolt with a longer one and a nut.
   3.3 Screw in by approximately 7 turns.
   3.4 Hold the bolt and tighten locking nut.

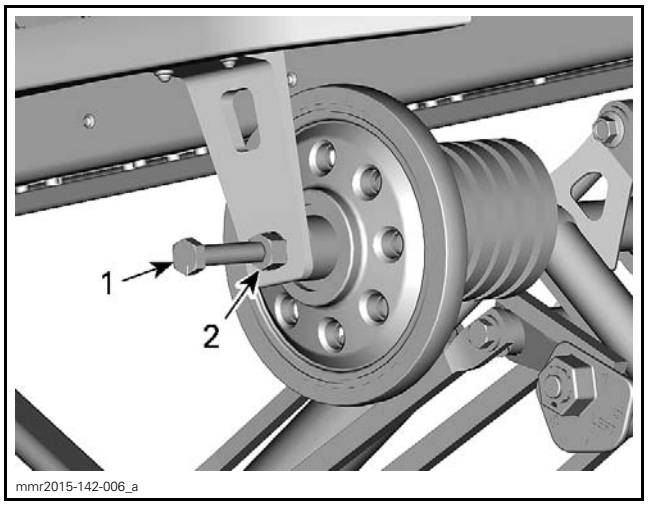


*1. Long bolt*
*2. Locking nut*

   3.5 Remove the bolt on the other side then unlock nut and remove the long bolt.
4. Remove bolts retaining front arm to tunnel the same way rear arm bolts have been removed.

NOTE: Discard the front arm bolts.

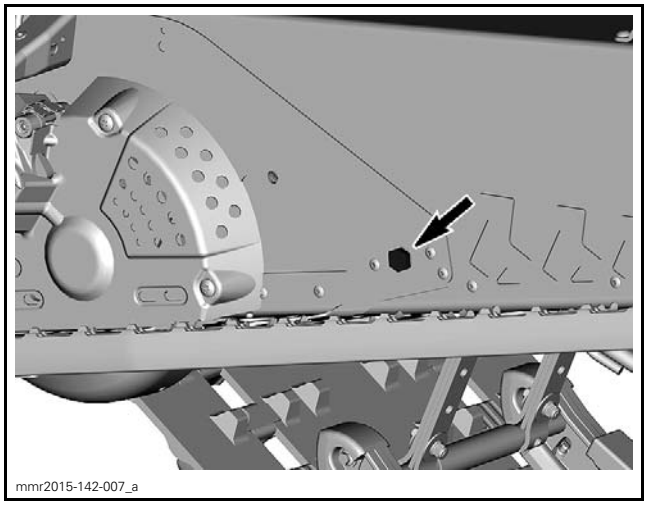


5. Lift rear of vehicle until front arm as enough clearance to pass underneath tunnel.
6. Remove suspension.

### Installing Suspension Assembly

The installation is the reverse of the removal procedure. However, pay attention to the following.

Inspect track thoroughly before reinstalling suspension. Refer to *TRACK* subsection.

Install suspension into track with front end first.

Install new front and rear arm bolts.

Tighten bolts to specification.

*16in Wide Suspension*

| TIGHTENING TORQUE | |
|---|---|
| Front and rear arm upper bolts | 48 N•m ± 6 N•m (35 lbf•ft ± 4 lbf•ft) |

*20in Wide Suspension*

| TIGHTENING TORQUE | |
|---|---|
| Front arm upper bolts | 61 N•m ± 9 N•m (45 lbf•ft ± 7 lbf•ft) |
| Rear arm upper bolts | 82.5 N•m ± 7.5 N•m (61 lbf•ft ± 6 lbf•ft) |

*All Suspension*

Adjust track tension, refer to *TRACK* subsection.

# REAR AXLE

## Removing the Rear Axle

1. Lift rear of vehicle and support it off the ground.
2. Completely loosen track tension.

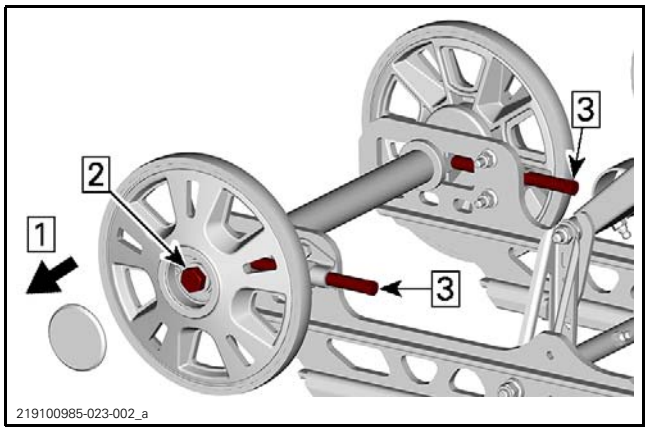


*Step 1: Remove caps*
*Step 2: Loosen one of the axle screws*
*Step 3: Loosen adjustment screws*

3. Remove both rear axle screws.
4. Remove rear idler wheels, seals and wheel spacers.

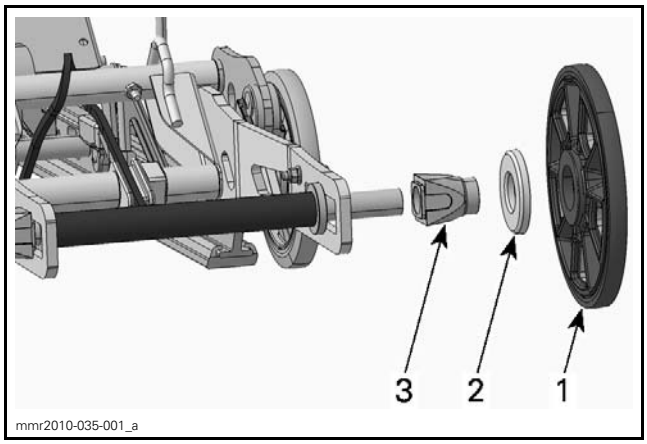


*2 IDLER WHEELS CONFIGURATION SHOWN*
*1. Rear idler wheel*
*2. Seal*
*3. Wheel spacer*

5. Pull out the rear axle.
6. Remove rear spacer and washers.

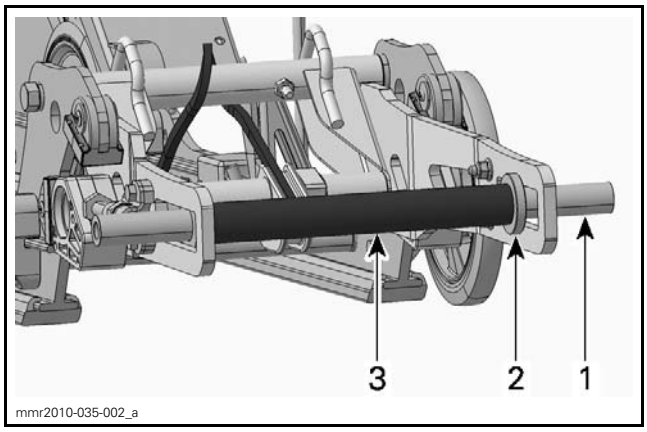


*2 IDLER WHEELS CONFIGURATION SHOWN*
*1. Rear axle*
*2. Washers*
*3. Rear axle spacer*

## Installing the Rear Axle

The installation is reverse of the removal procedure. However, pay attention to the following.

Make sure to position all parts correctly.

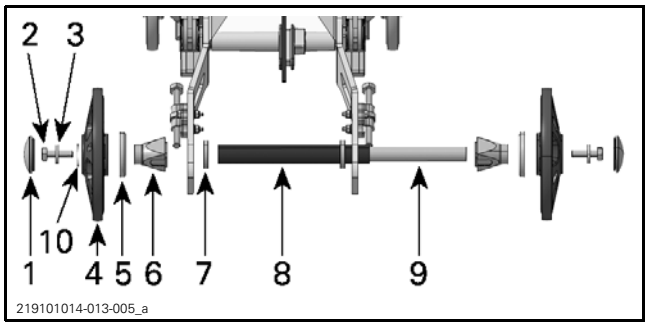


*2 IDLER WHEELS*

1. *Idler wheel cap*
2. *Screw*
3. *Conical washer*
4. *Idler wheel*
5. *Seal*
6. *Wheel spacer*
7. *Washer*
8. *Rear axle spacer*
9. *Rear axle*
10. *Flat washer*

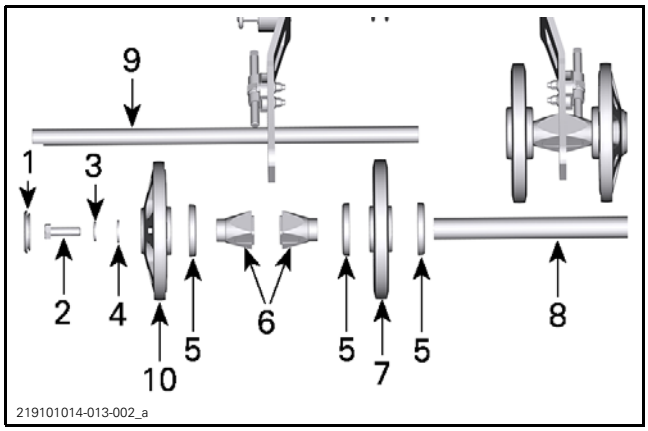


*4 IDLER WHEELS*

1. *Idler wheel cap*
2. *Screw*
3. *Conical washer*
4. *Flat washer*
5. *Seal*
6. *Wheel spacers*
7. *Inner idler wheel*
8. *Rear axle spacer*
9. *Rear axle*
10. *Outer idler wheel*

Position wheel spacers with a flat side up and a groove in front of tensioner screw.

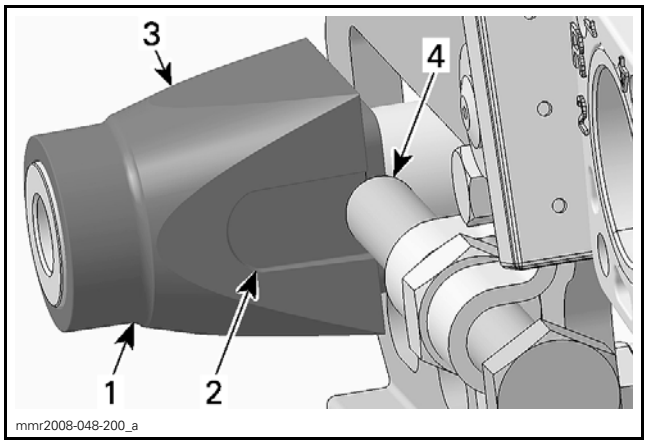


1. *Wheel spacer*
2. *Groove*
3. *Flat side*
4. *Tensioner screw*

When tightening rear axle, make sure each wheel spacer protuberance is engaged into runner slot.

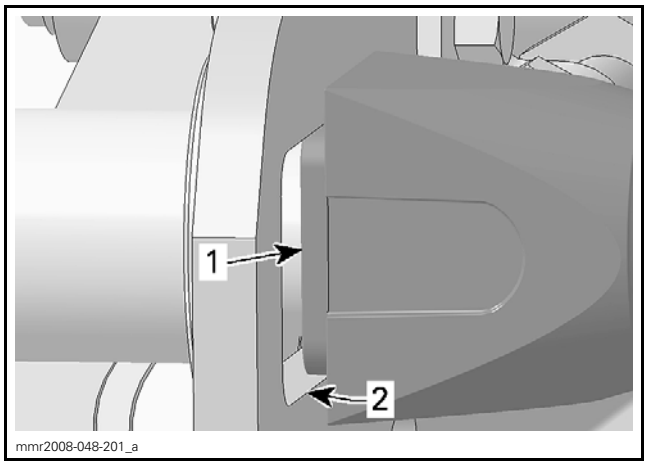


1. *Wheel spacer protuberance*
2. *Runner slot*

Adjust track tension. Refer to *TRACK* subsection.

# REAR EXTENSION

## Removing the Rear Extension

1. Lift rear of vehicle and support it off the ground.
2. Proceed with *REMOVING THE REAR AXLE*. Refer to procedure in this subsection.
3. Unload the spring cam of rear extension by placing it to position 1.

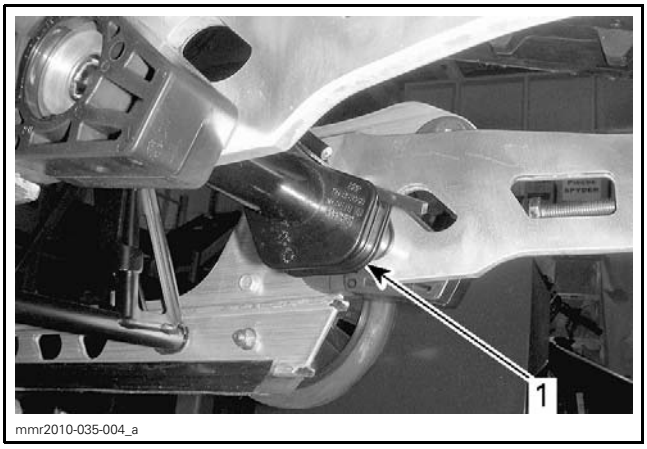

mmr2010-035-004_a

*1. Spring cam set to position 1*

4. Ensure that rear extension is positioned fully downwards (against lower stopper).

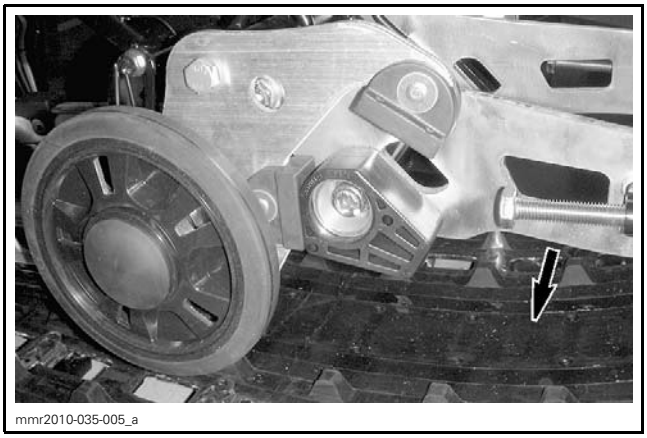
mmr2010-035-005_a

5. Remove retaining screws and washers from rear extension pivot.

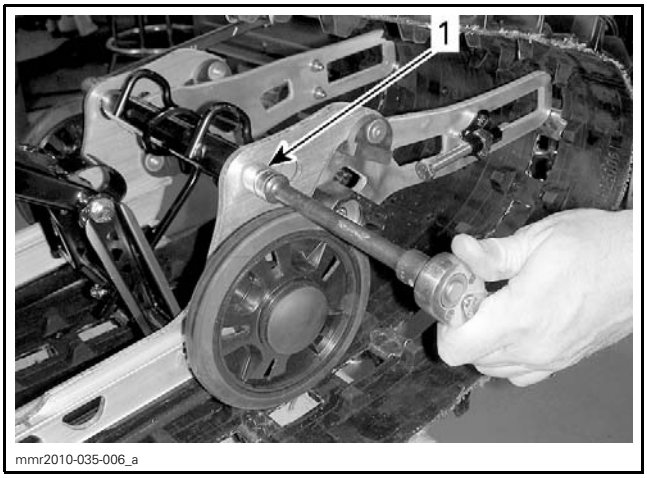

mmr2010-035-006_a

*1. Retaining screw of rear extension pivot*

6. Remove retaining screws and washers from rear extension block.
7. Remove rear extension blocks and spacer.

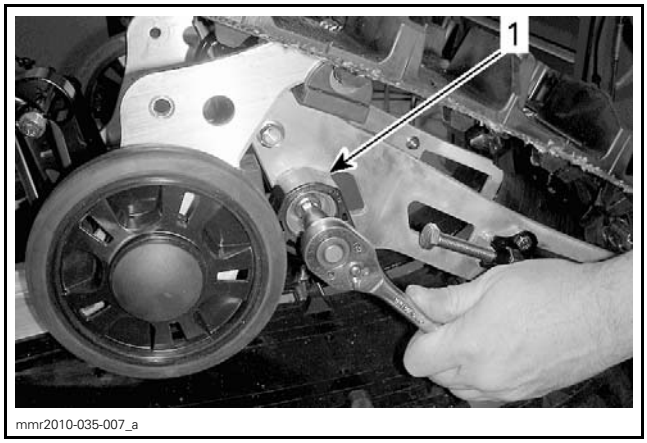

mmr2010-035-007_a

*1. Rear extension block*

8. Rotate rear extension downwards then remove it from rear suspension.

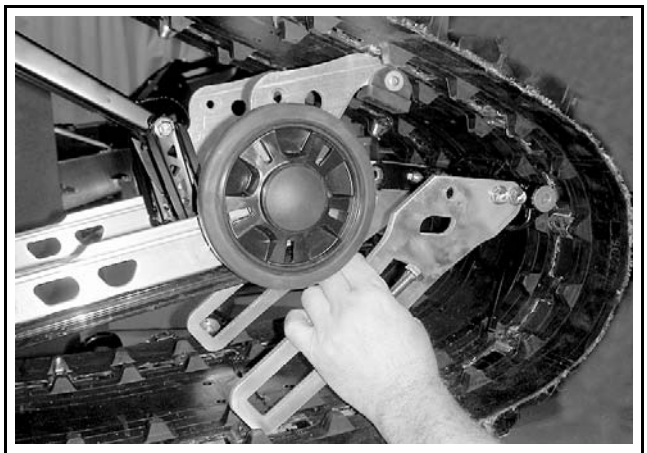
mmr2010-035-008_a

### Installing the Rear Extension

The installation is the reverse of the removal procedure. However, pay attention to the following.

Lubricate rear extension pivot. Refer to *MAINTENANCE* in this subsection.

## SHOCK ABSORBERS

### Removing the Rear Shock Absorber

1. Lift rear of vehicle and support it off the ground.

NOTE: If necessary, to ease shock removal, unfasten stopper strap to release shock pressure.

2. Remove bolts and nuts from shock.

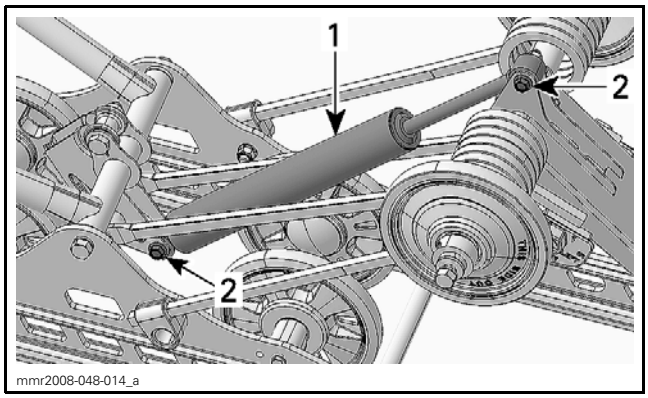


*TYPICAL*
1. *Rear shock absorber*
2. *Remove bolts and nuts*

## Removing the Center Shock Absorber

1. Lift the rear of vehicle and support it off the ground.
2. Unfasten stopper strap.

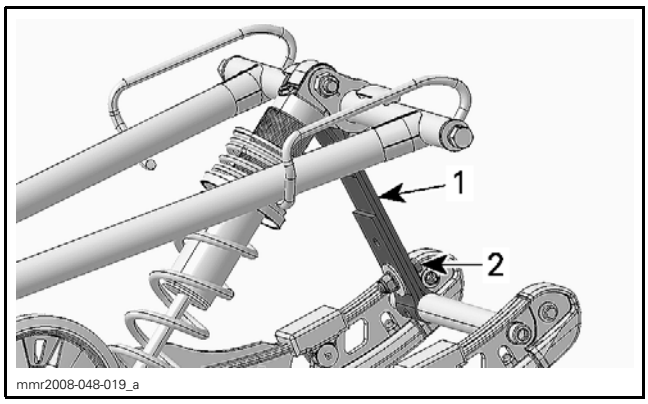


*TYPICAL*
1. *Stopper strap*
2. *Stopper strap bolt*

3. Remove upper and lower shock absorber bolts and nuts.

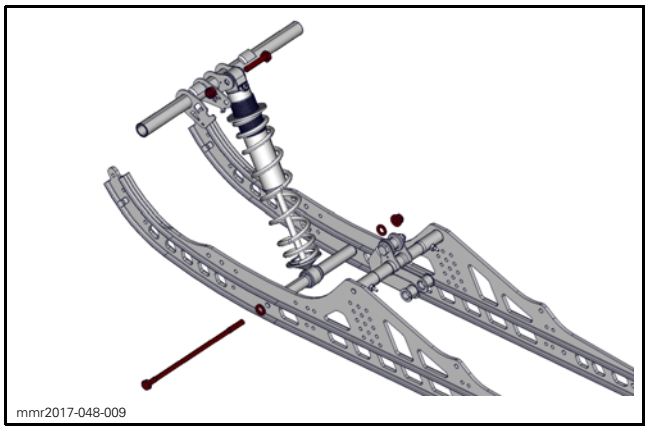


4. Remove shock absorber from vehicle.
5. Remove bushings and shock shaft from shock absorber.

## Inspecting the Shock Absorber

Refer to *REAR SUSPENSION (rMOTION)* subsection for complete procedures.

## Installing the Rear Shock Absorber

The installation is the reverse of the removal procedure. However, pay attention to the following.

To ease shock installation, secure upper side of shock first.

Install **NEW** shock absorber retaining nuts and tighten to specification.

| TIGHTENING TORQUE | |
|---|---|
| Rear shock absorber retaining nuts | 24.5 N•m ± 3.5 N•m (18 lbf•ft ± 3 lbf•ft) |

## Installing the Center Shock Absorber

The installation is the reverse of the removal procedure. However, pay attention to the following.

1. Position the adjustment ring or cam downwards.

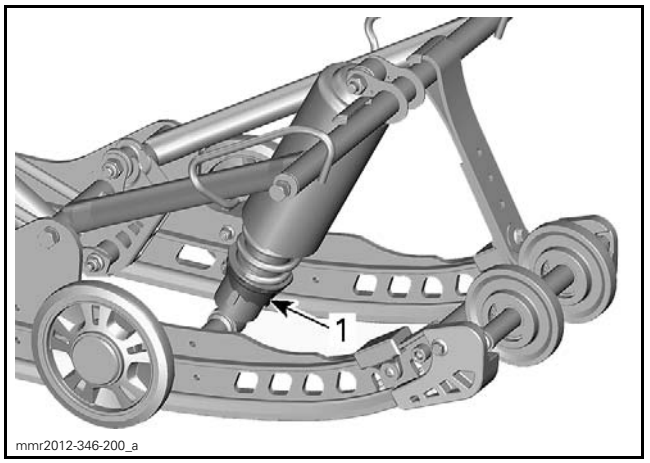


*TYPICAL*
1. *Cam*

2. Using **NEW** socket screws, install shock shaft to runners.
3. Position washers in proper position.

Tighten nut to specification.

*16in Wide Suspension*

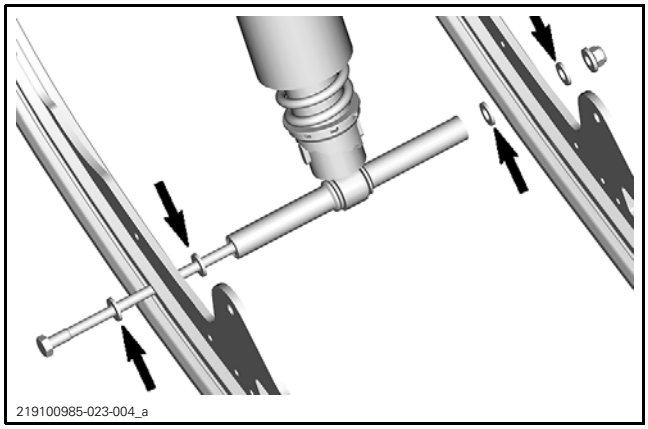


| TIGHTENING TORQUE | |
|---|---|
| Center shock shaft retaining nut | 70 N•m ± 10 N•m (52 lbf•ft ± 7 lbf•ft) |

*20in Wide Suspension*

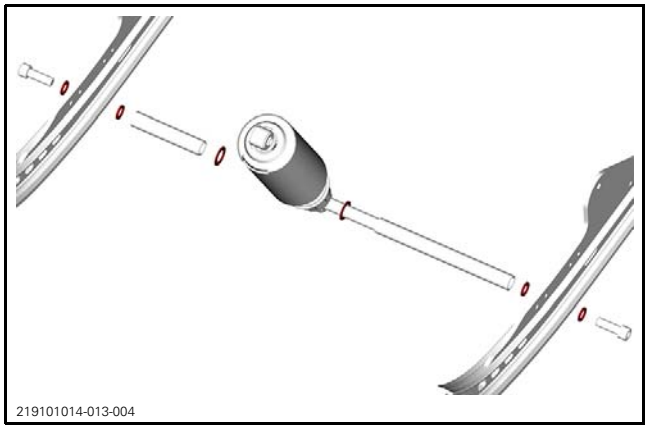


| TIGHTENING TORQUE | |
|---|---|
| Center shock shaft retaining screws | 85 N•m ± 10 N•m (63 lbf•ft ± 7 lbf•ft) |

# REAR SPRINGS

## Removing the Rear Spring

1. Lift rear of vehicle and support it off the ground.
2. Completely loosen track tension.

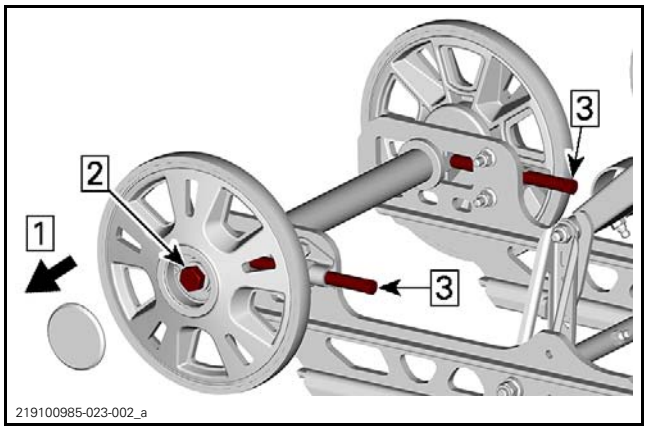


*Step 1: Remove caps*
*Step 2: Loosen one of the axle screws*
*Step 3: Loosen adjustment screws*

3. Decrease springs preload by turning cams accordingly.

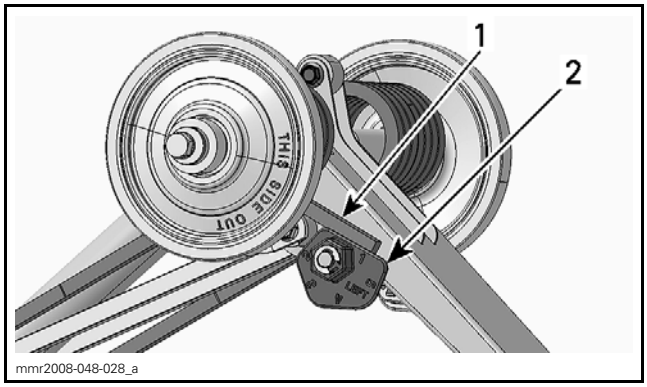


*LH SIDE SHOWN*
*1. Rear spring*
*2. Cam*

4. Firmly hold the spring support and unscrew its retaining bolt (one each side).

**⚠ WARNING**

**Supports are spring loaded.**

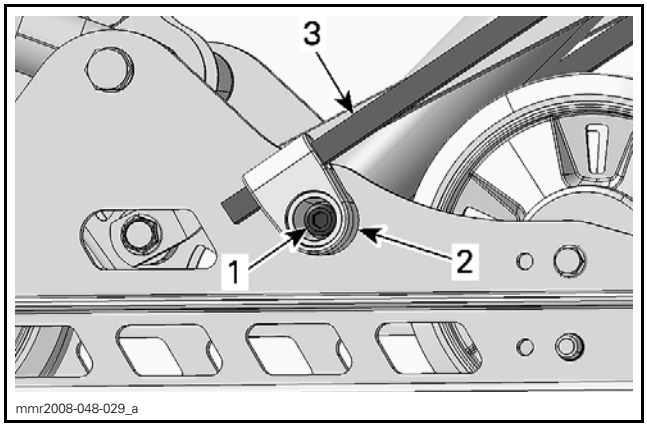


*1. Spring support bolt*
*2. Spring support*
*3. Spring*

5. Remove screws and washers from rear arm top axle. Refer to *REMOVING SUSPENSION ASSEMBLY*.
6. Loosen set screw from locking rings.
7. Remove locking rings.

*16in Track*

8. Remove upper idler wheels.

*20in Track*

9. Hand tighten a M12 x 30 screw in the axle with contact between the screw head and the axle.
10. Hit on the screw head to slide the axle out of the idler wheel.

*All Tracks*

11. Remove springs.

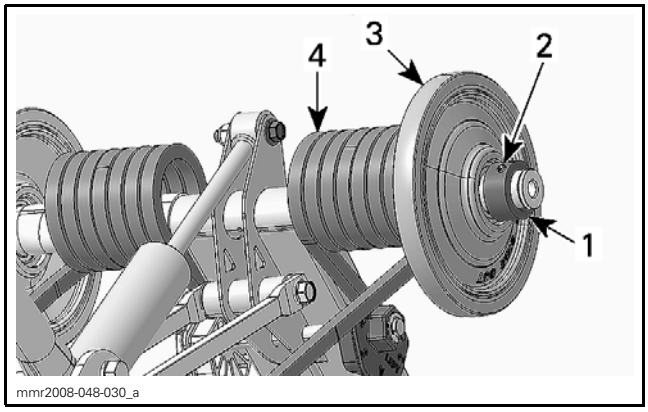


mmr2008-048-030_a

*LH SIDE SHOWN*
1. *Locking ring*
2. *Set screw*
3. *Upper idler wheel*
4. *Rear spring*

## Installing the Rear Spring

The installation is the reverse of the removal procedure. However, pay attention to the following.

1. Respect THIS SIDE OUT inscription on top idler wheels.

*20in Track*

2. Use a hammer and a suitable sleeve to slide the idler wheel back in place.

**NOTICE** **Lean on the bearing inner race to slide it on the axle.**

*All Tracks*

3. Make sure that spring end is in cam adjuster.

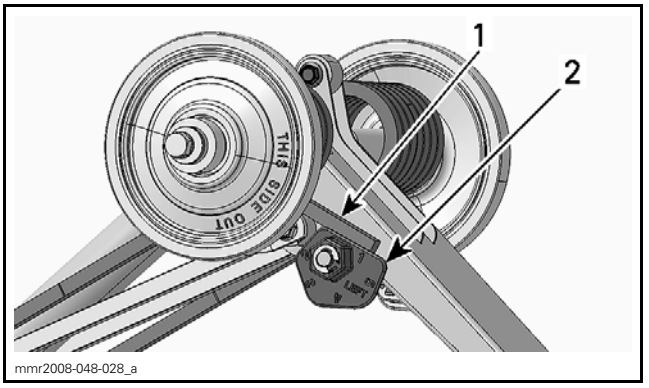


mmr2008-048-028_a

*LH SIDE SHOWN*
1. *Spring end*
2. *Cam*

4. Install spring supports upwards.

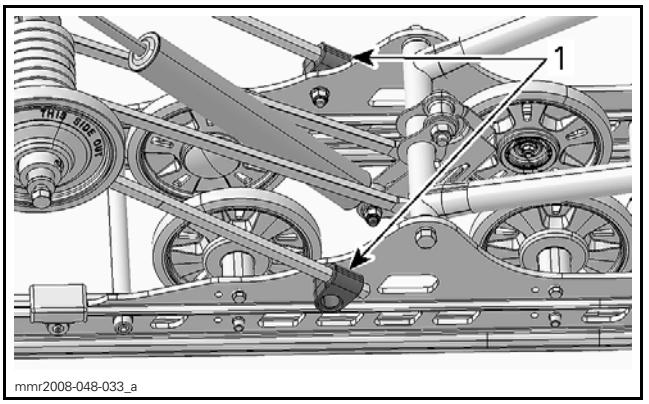


mmr2008-048-033_a

*TYPICAL*
1. *Spring supports upwards*

# SLIDER SHOES

## Removing the Slider Shoe

1. Lift rear of vehicle and support it off the ground.
2. Completely loosen track tension.

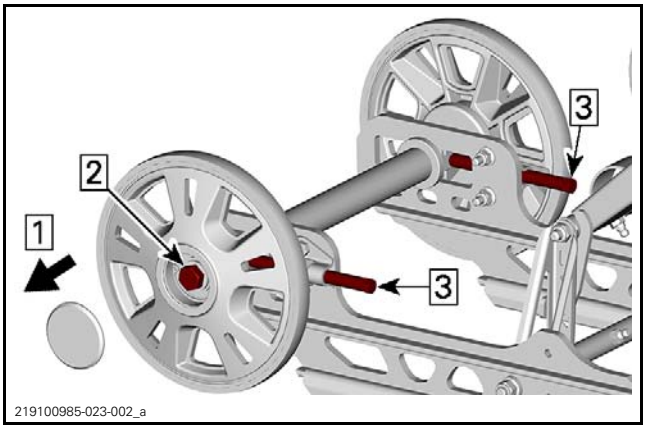


219100985-023-002_a

*Step 1: Remove caps*
*Step 2: Loosen one of the axle screws*
*Step 3: Loosen adjustment screws*

3. Remove nut and screw of each runner.

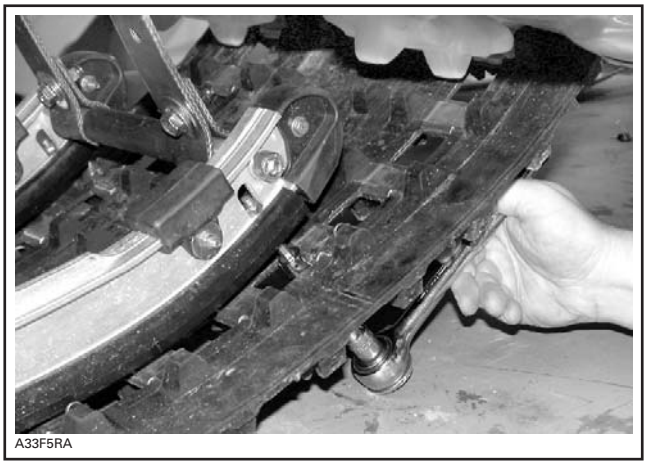
A33F5RA

*REMOVE NUT AND SCREW OF EACH RUNNER*

4. At the rear of vehicle, align a track window with slider shoe.

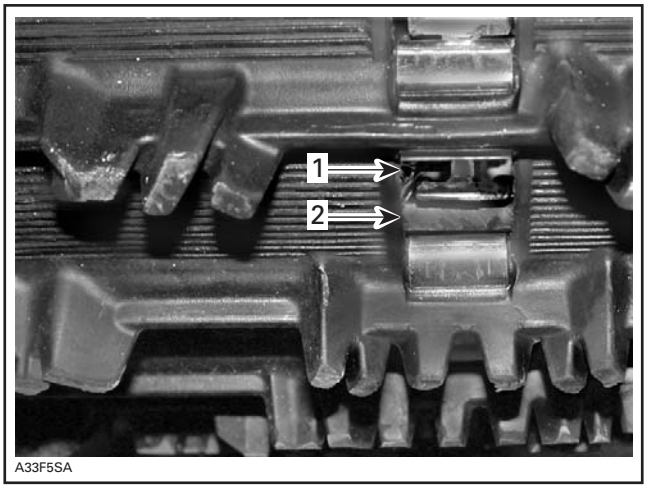

A33F5SA

*TYPICAL*
1. *Track window*
2. *Slider shoe*

5. Using a pry bar or a screwdriver, push slider shoe rearward until it comes in contact with track.

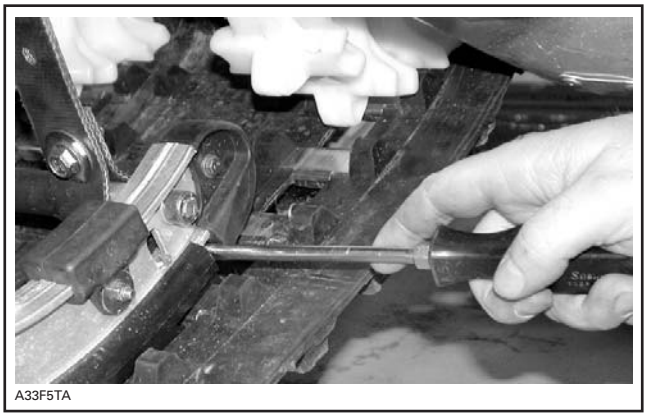
A33F5TA

*PUSH ON SLIDER SHOE*

6. Using locking pliers, pull slider shoe through track window to remove.

NOTE: If necessary, lubricate track window to facilitate slider shoe removal.

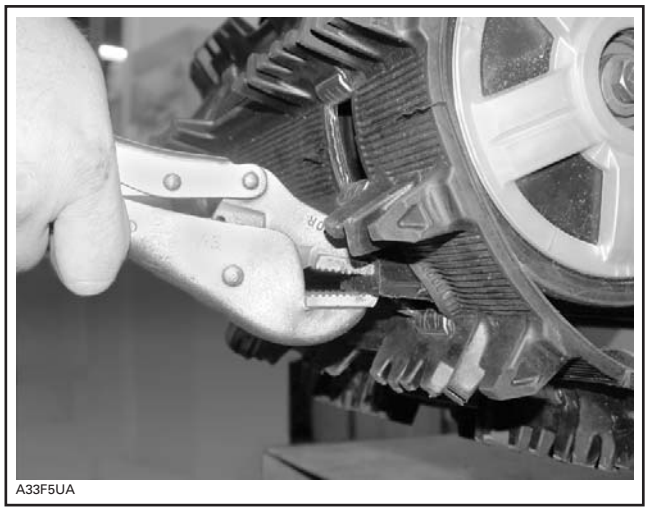
A33F5UA

*PULL ON SLIDER SHOE TO REMOVE*

### Installing the Slider Shoe

The installation is the reverse of the removal procedure. However, pay attention to the following.

Make sure to insert slider shoe end with hole first.

## FRONT ARM

### Removing the Front Arm

1. Proceed with *REMOVING THE SUSPENSION ASSEMBLY*. Refer to procedure in this subsection.
2. Remove the bolt securing rocker to front arm.

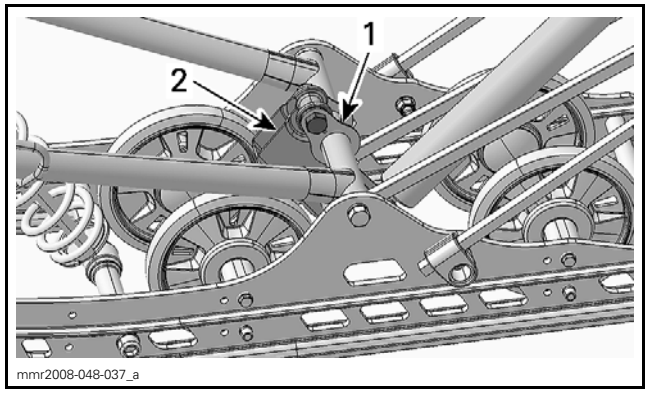

mmr2008-048-037_a

1. *Front arm*
2. *Rocker*

3. Unscrew and remove the front arm lower bolts and washers.

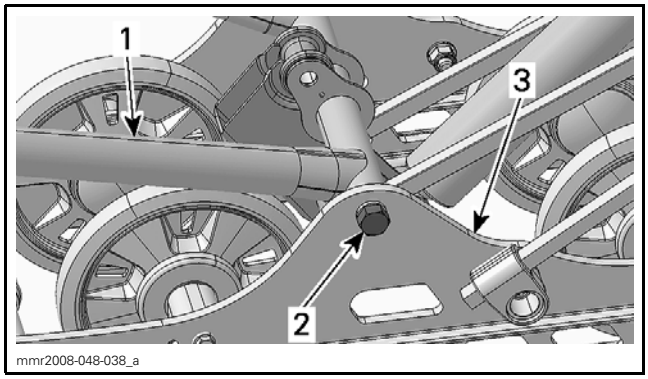


1. *Front arm*
2. *Lower bolt*
3. *LH runner*

4. Remove the shock absorber upper bolt.

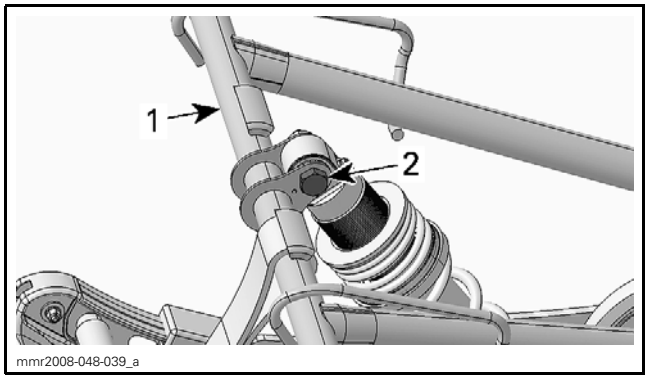


1. *Front arm*
2. *Shock absorber upper bolt*

5. Unfasten stopper strap.

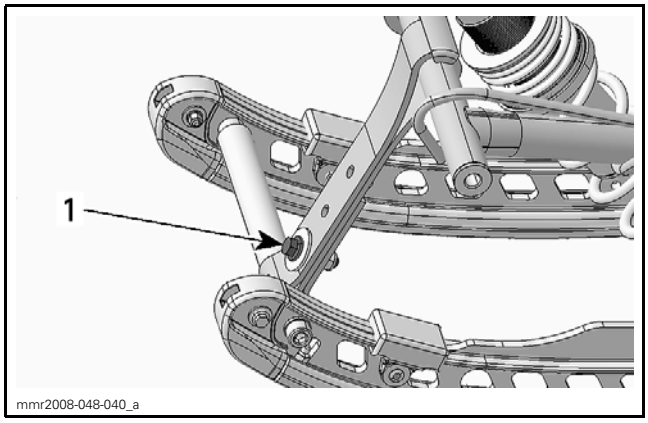


1. *Stopper strap bolt*

6. Remove and discard front arm upper bolts.

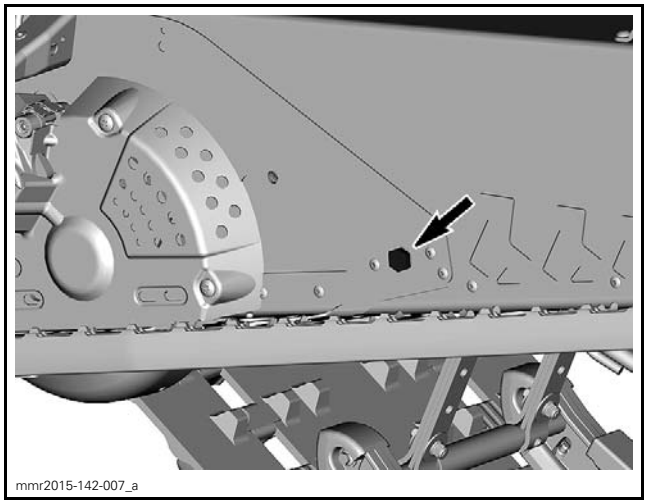


7. Remove front arm.

### Installing the Front Arm

The installation is the reverse of the removal procedure. However, pay attention to the following.

Install **NEW** front arm upper and lower bolts.

Tighten screws to specification.

*16in Wide Suspension*

| TIGHTENING TORQUE | |
|---|---|
| Front arm lower bolts | 61 N•m ± 9 N•m (45 lbf•ft ± 7 lbf•ft) |
| Front arm upper bolts | 48 N•m ± 6 N•m (35 lbf•ft ± 4 lbf•ft) |

*20in Wide Suspension*

| TIGHTENING TORQUE | |
|---|---|
| Front arm upper and lower bolts | 61 N•m ± 9 N•m (45 lbf•ft ± 7 lbf•ft) |

## REAR ARM

### Removing the Rear Arm

1. Lift rear of vehicle and support it off the ground.
2. Completely loosen track tension.

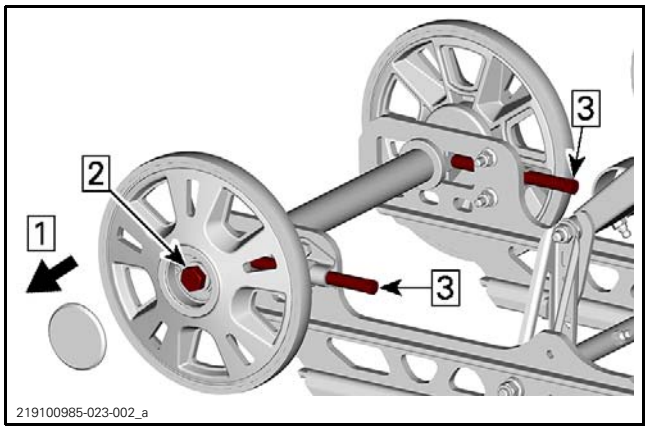


*Step 1: Remove caps*
*Step 2: Loosen one of the axle screws*
*Step 3: Loosen adjustment screws*

3. Proceed with *REMOVING THE REAR SPRING*. Refer to procedure in this subsection.
4. Remove the rear shock absorber upper bolt.

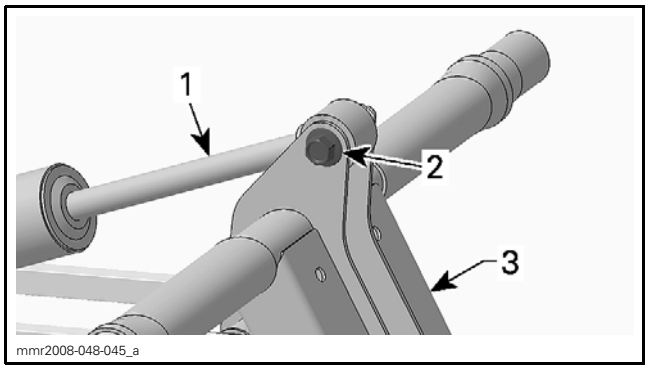


1. *Rear shock absorber*
2. *Shock absorber bolt*
3. *Rear arm*

5. Remove throttle rods from rear arm.

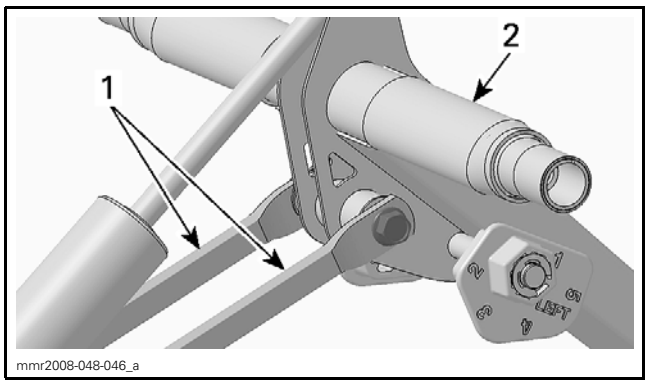


1. *Throttle rods*
2. *Rear arm*

6. Remove bolts and washers holding rear arm to pivot arm.

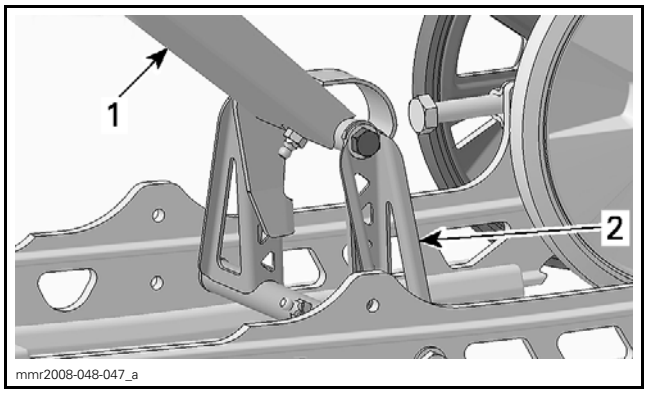


1. *Rear arm*
2. *Pivot arm*

## Installing the Rear Arm

The installation is the reverse of the removal procedure. However, pay attention to the following.

Pivot arm grease fitting must be towards the front of the vehicle.

At installation, rear arm stroke limiter must be towards rear.

Assemble rear arm fasteners as per following illustrations.

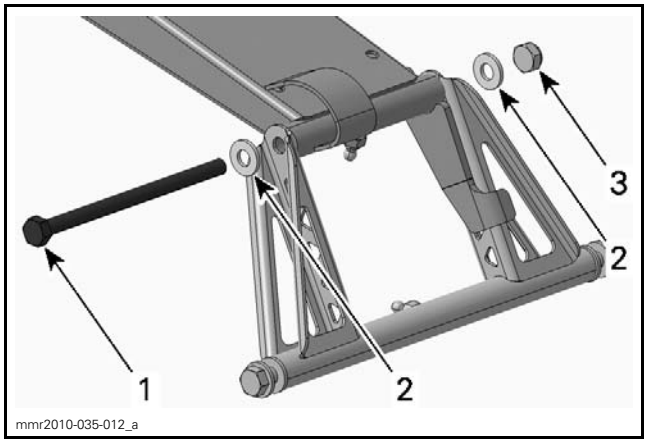


*16in SUSPENSION*
1. *Rear arm lower bolt*
2. *Washers*
3. *Rear arm lower nut*

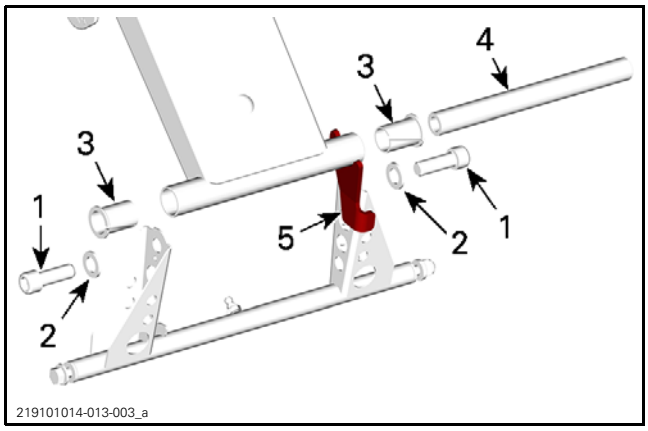


*20in SUSPENSION*
1. *Rear arm lower bolts*
2. *Washers*
3. *Bushings*
4. *Axle*
5. *Stroke limiter*

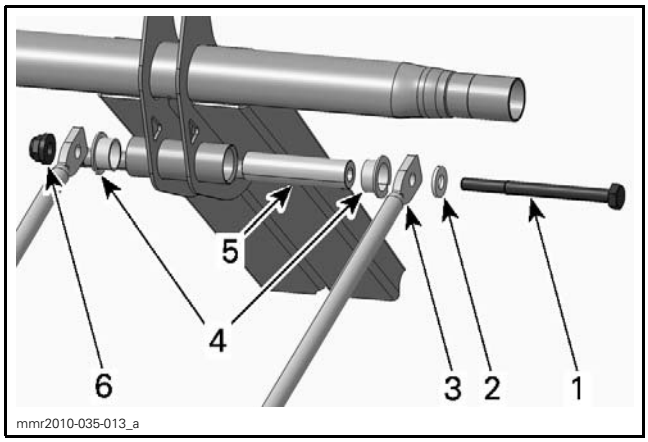


*SOME PARTS REMOVED FOR CLARITY PURPOSE*
1. *Throttle rod upper bolt*
2. *Washer*
3. *Throttle rod*
4. *Bushings*
5. *Axle*
6. *Throttle rod upper nut*

Refer to exploded view for new fasteners to install and tightening torques.

Lubricate rear arm pivot. Refer to *MAINTENANCE* in this subsection.

# PIVOT ARM

## Removing the Pivot Arm

1. Lift rear of vehicle and support it off the ground.
2. Completely loosen track tension.

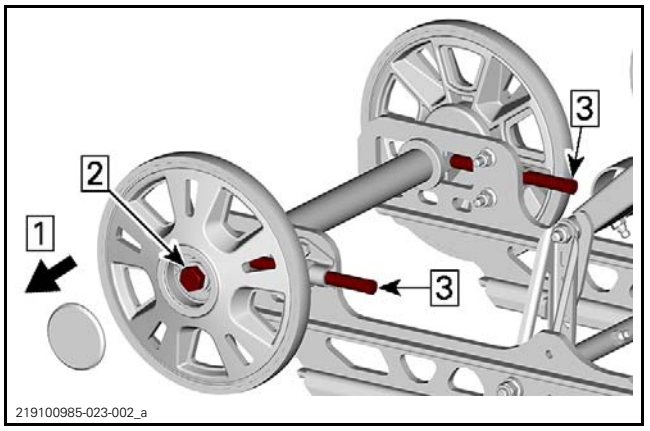


*Step 1: Remove caps*
*Step 2: Loosen one of the axle screws*
*Step 3: Loosen adjustment screws*

3. Remove bolt and washers retaining rear arm to pivot arm.

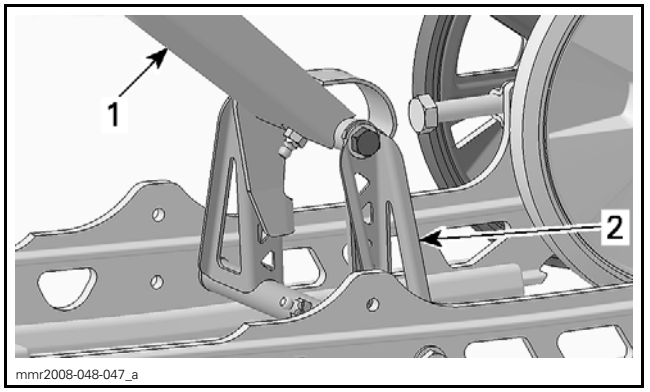


1. *Rear arm*
2. *Pivot arm*

4. Remove bolt and washers retaining pivot arm to runners.

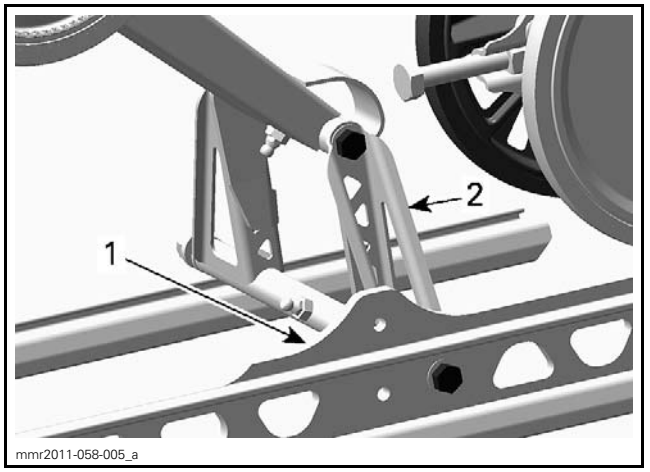


1. *Runner*
2. *Pivot arm*

5. Carefully remove pivot arm from rear arm.

## Installing the Pivot Arm

The installation is the reverse of the removal procedure. However, pay attention to the following.

Assemble pivot arm fastener as per following illustrations.

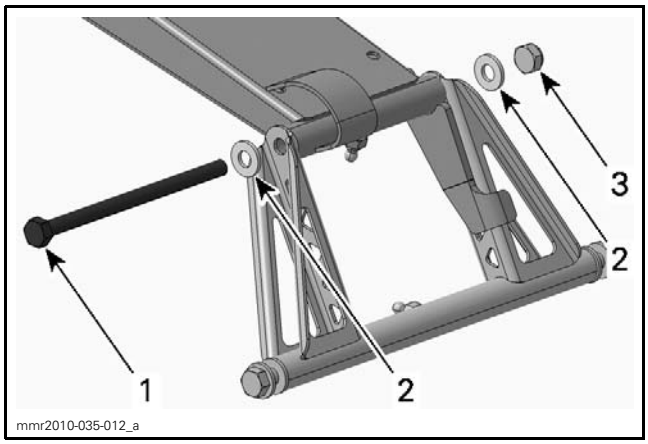


*16in SUSPENSION*
1. *Rear arm lower bolt*
2. *Washers*
3. *Rear arm lower nut*

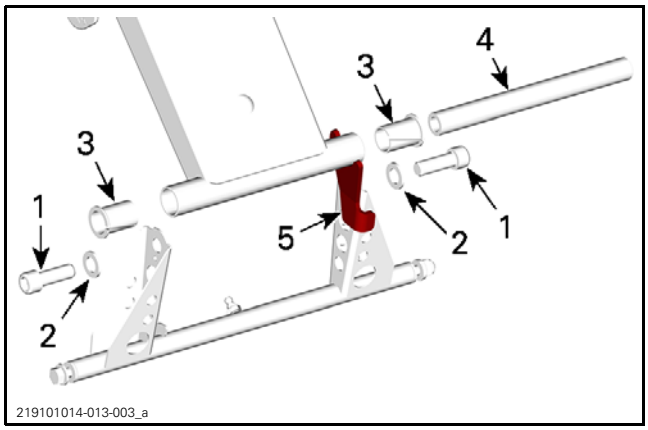


*20in SUSPENSION*
1. *Rear arm lower bolts*
2. *Washers*
3. *Bushings*
4. *Axle*
5. *Stroke limiter*

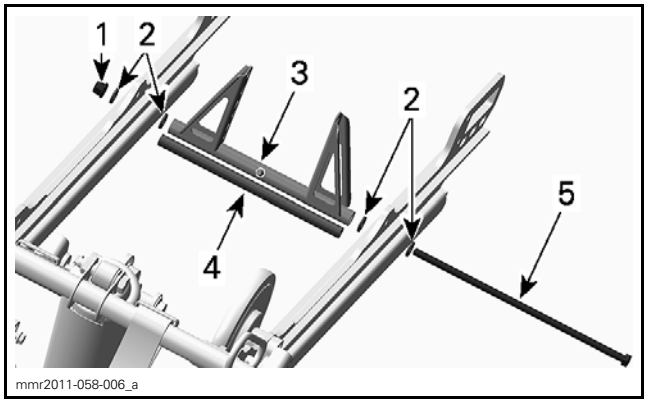


*PARTS REMOVED FOR CLARITY PURPOSE*
1. *Pivot arm lower nut*
2. *Washers*
3. *Pivot arm*
4. *Axle*
5. *Pivot arm lower screw*

Refer to exploded view for new fasteners to install and tightening torques.

Lubricate pivot arm. Refer to *MAINTENANCE*.

# IDLER WHEELS AND SUPPORTS

Refer to the exploded views at the beginning of this subsection for parts layout and fasteners tightening torque.

# STOPPER STRAP

Refer to the exploded views at the beginning of this subsection for parts layout and fasteners tightening torque.

# STEERING SYSTEM

## SERVICE PRODUCTS

| Description | Part Number | Page |
|---|---|---|
| SYNTHETIC GREASE | 779162 | 590 |
| SYNTHETIC SUSPENSION GREASE | 779163 | 586, 599 |
| XPS BRAKES AND PARTS CLEANER (USA) | 219 701 705 | 589 |
| XPS BRAKES AND PARTS CLEANER | 219 701 776 | 589 |

## SKIS (WITHOUT ADJUSTABLE RUNNER)

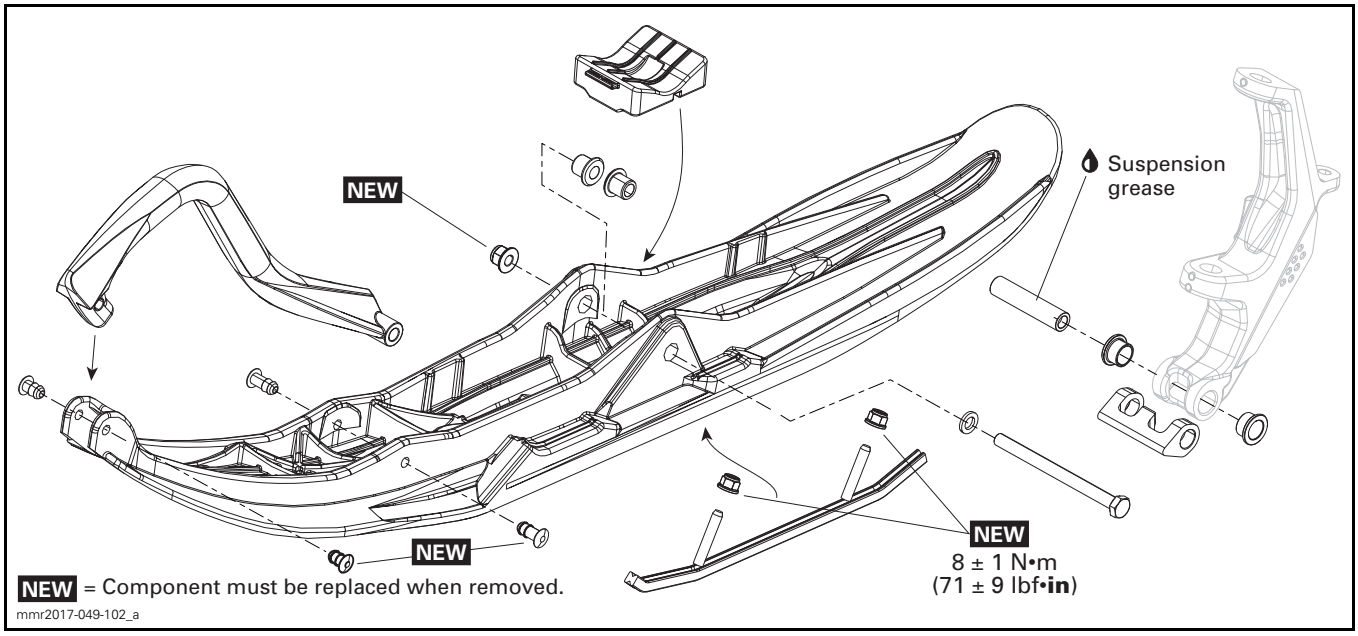

# SKIS (WITH ADJUSTABLE RUNNER)

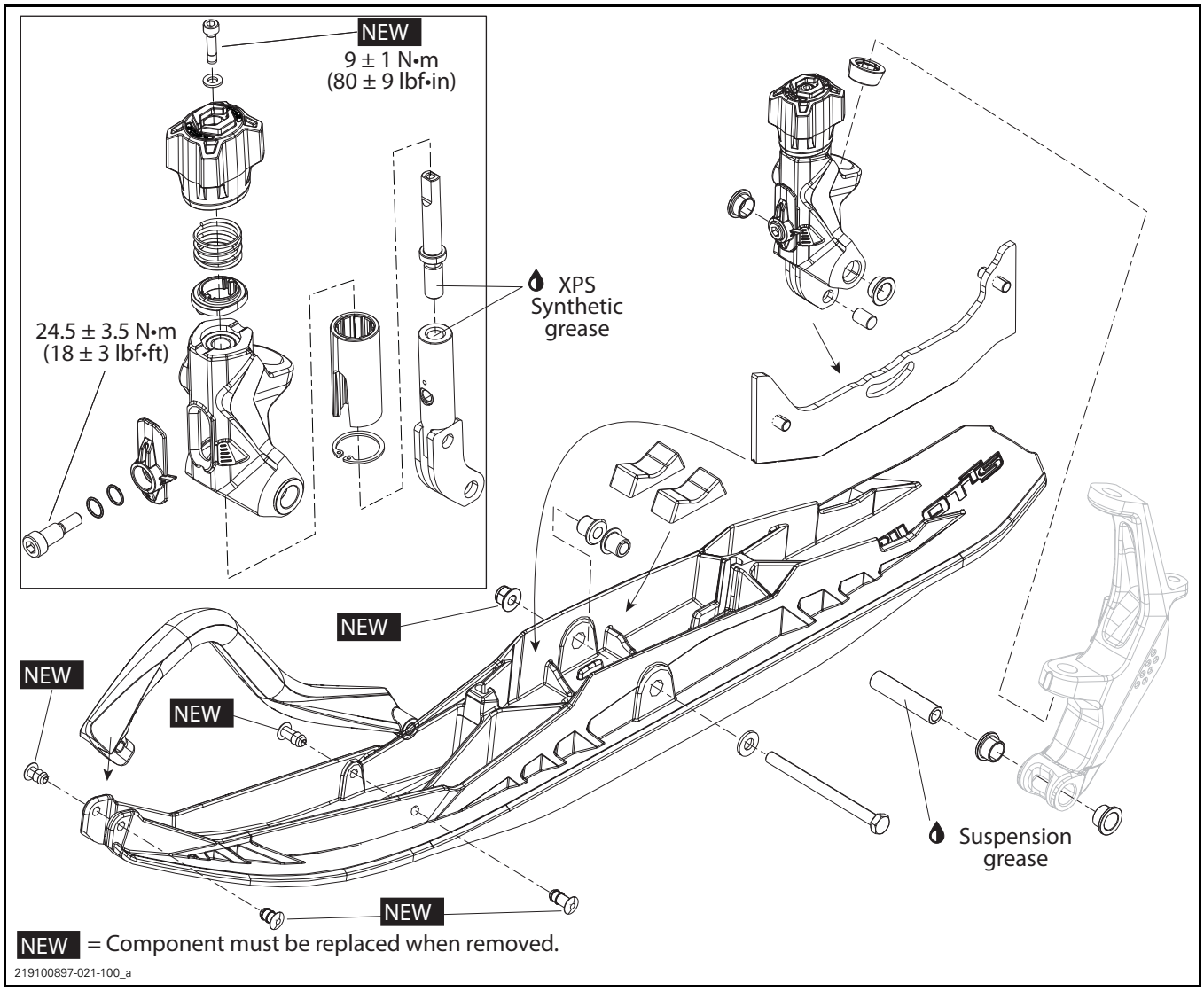

# STEERING COLUMN AND TIE-RODS - PITMAN ARM

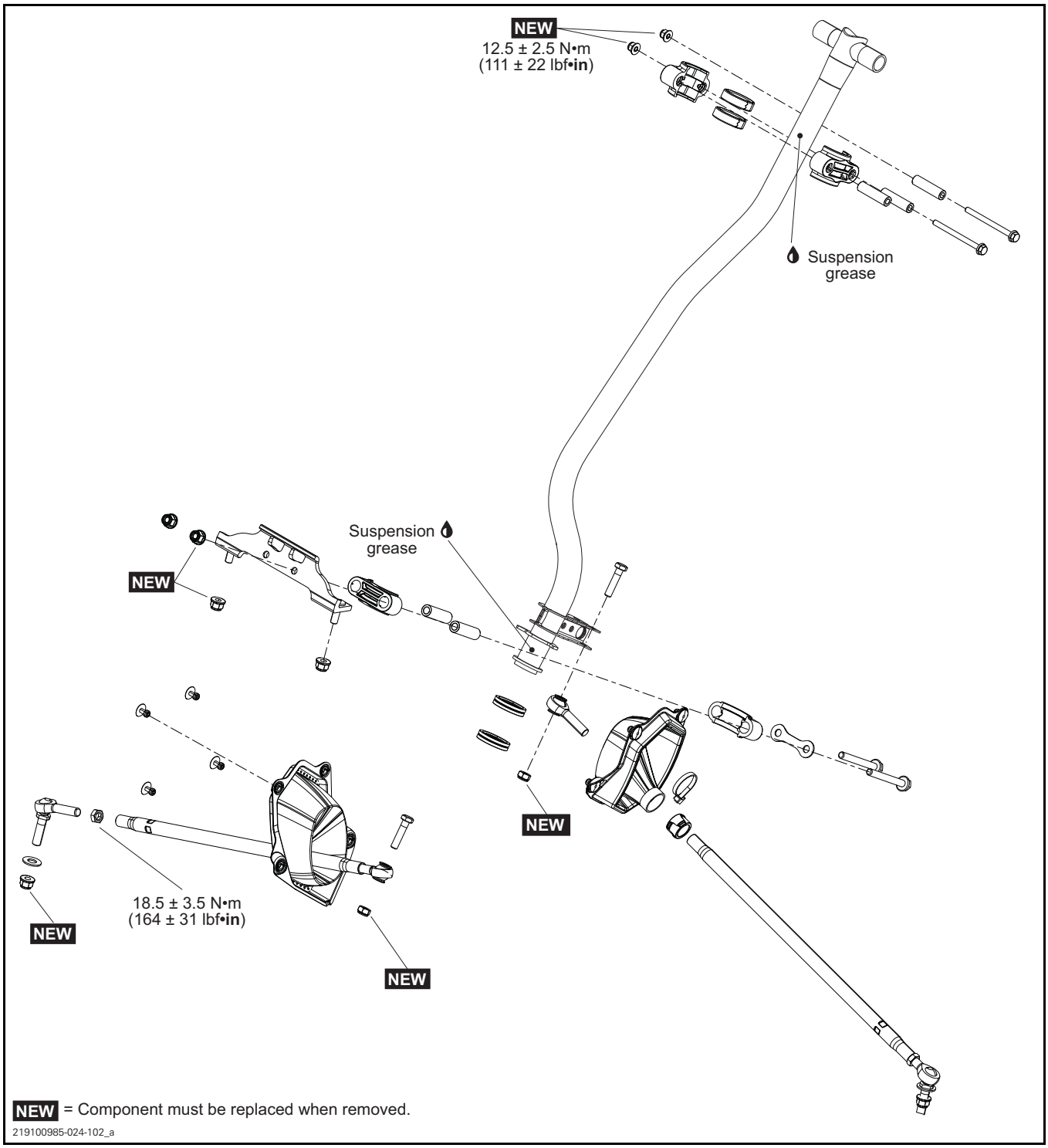

# STEERING COLUMN AND TIE-RODS - RACK

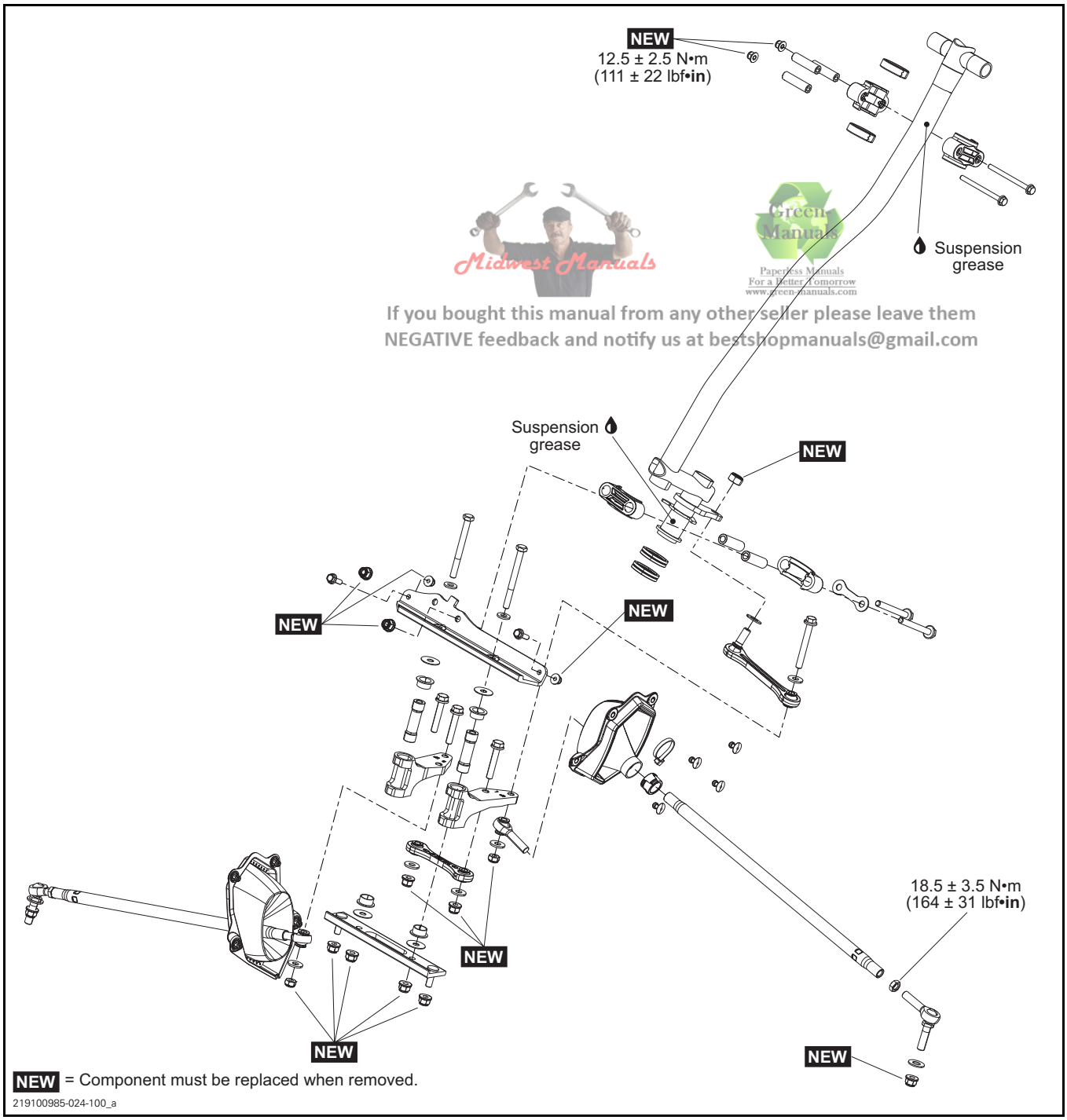


Midwest Manuals
Green Manuals
Paperless Manuals
For a Better Tomorrow
www.green-manuals.com
If you bought this manual from any other seller please leave them
NEGATIVE feedback and notify us at bestshopmanuals@gmail.com

# HANDLEBAR

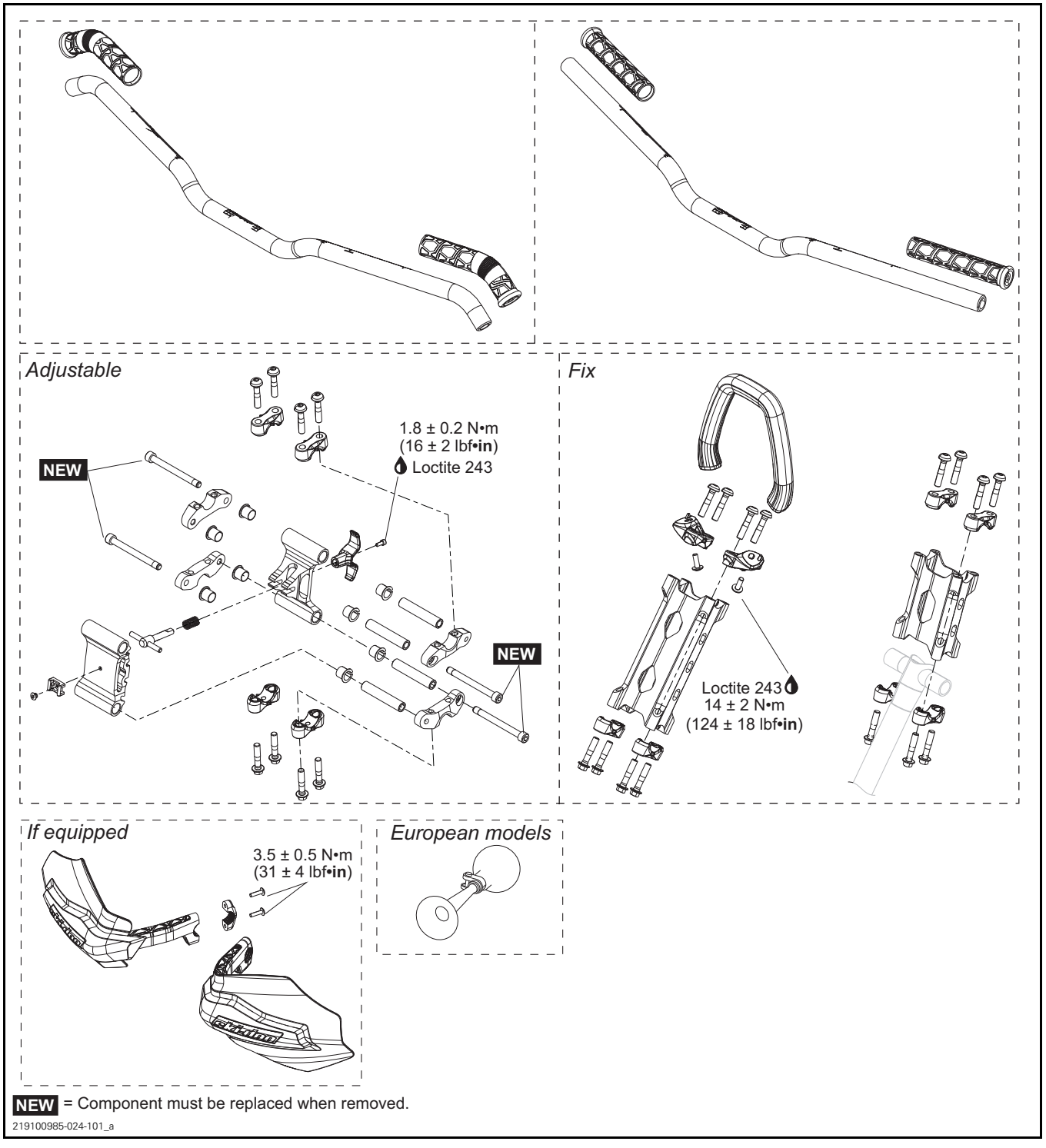


**NEW** = Component must be replaced when removed.

219100985-024-101_a

# GENERAL

When removing or replacing a part of the steering mechanism, perform the steering alignment, refer to *ALIGNING THE STEERING* in this subsection.

During assembly/installation, use the torque values and service products as in the exploded views.

Clean threads before applying a threadlocker. Refer to *SELF-LOCKING FASTENERS* and *LOCTITE APPLICATION* at the beginning of this manual for complete procedure.

**⚠ WARNING**

**Torque wrench tightening specifications must be strictly adhered to.**
**Locking devices when removed (e.g.: locking tabs, elastic stop nuts, cotter pins, etc.) must be replaced.**

***NOTICE*** **Hoses, cables and locking ties removed during a procedure must be reinstalled at the same location.**

# ADJUSTMENT

## ALIGNING THE STEERING

Ski alignment is performed by adjusting the length of left and right tie-rods.

1. Leave the vehicle on the ground on its own weight.
2. Attach ski handles together with a bungee cord.

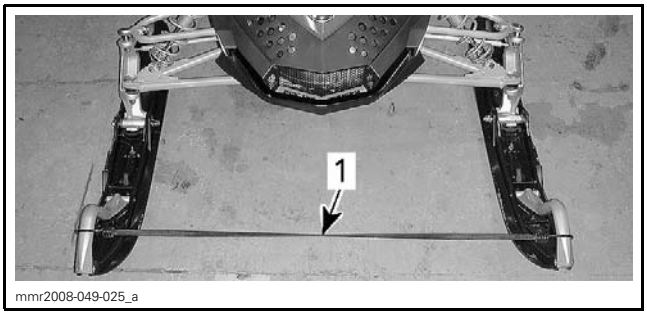


*TYPICAL*
*1. Bungee cord*

3. Position handlebar so that it is straight ahead position by measuring from the extremities of the grips to the rear most edge of the tunnel, as shown.

NOTE: The reference point must be the same to each side.

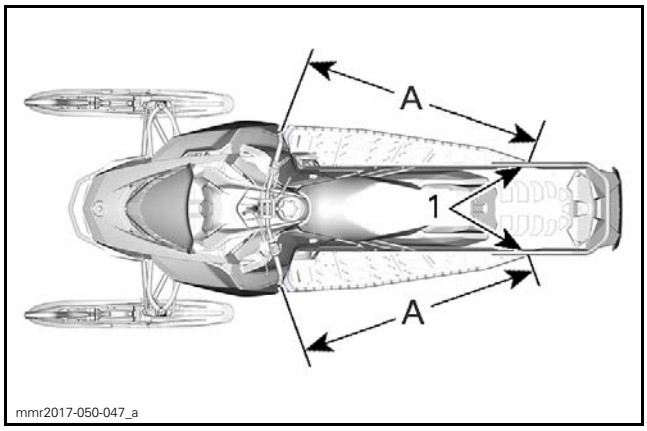


*TYPICAL*
*1. Same reference point*
*A. Equal distance on each side*

4. Ensure track is properly aligned.
5. Verify if skis are in straight-ahead position by placing a straight edge against track and measuring distance between front and rear ski bridges and straight edge.
6. With skis in straight ahead position, adjust the toe-out.
7. Measure the distance between front and rear ski bridges in line with arrows on skis.
8. Use the following illustration and this equation to determine the steering adjustment.

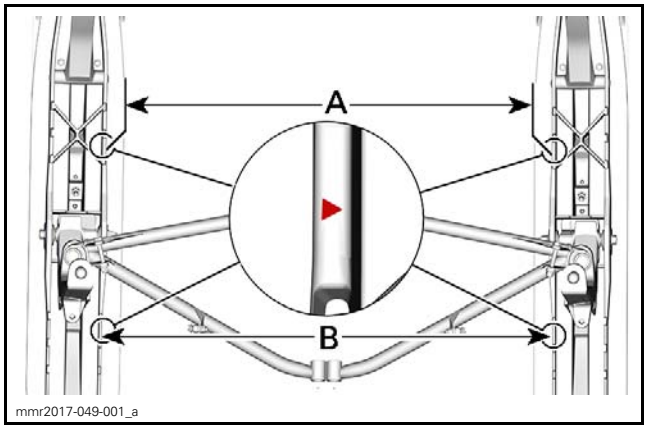


| STEERING ALIGNMENT | |
|---|---|
| Toe-out | A – B = 5 mm (.197 in) |

9. If adjustment is needed, loosen tie-rod jam nuts then turn tie-rods to change their length.

NOTE: There is no jam nut on the inner tie-rods.

10. Tighten jam nuts to specification.

| TIGHTENING TORQUE | |
|---|---|
| Jam nut | 18.5 N•m ± 3.5 N•m (164 lbf•**in** ± 31 lbf•**in**) |


mmr2017-050-045

**⚠ WARNING**

**The maximum tie-rod end length (A) not engaged in the tie rod must not exceed 34 mm (1.339 in).**

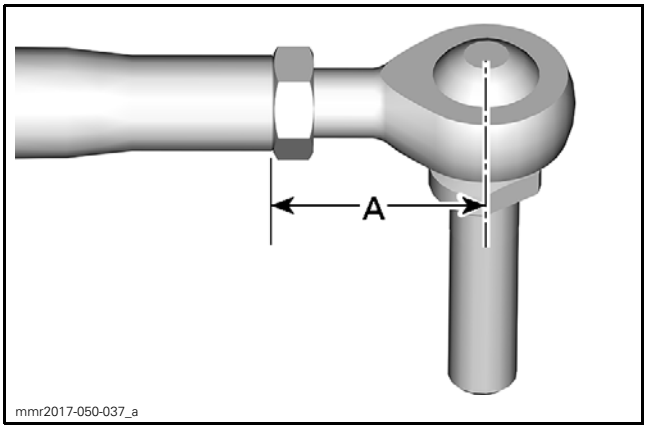

mmr2017-050-037_a

# INSPECTION

## INSPECTING THE SKI AND RUNNER

Lift the front of vehicle and check ski runners for wear or damage (missing or broken carbide). Replace if necessary.

Inspect ski for excessive wear or other damage. Replace if necessary.

Refer to *ADJUSTABLE RUNNER MECHANISM* in this subsection for adjustable ski mechanism inspection.

## INSPECTING THE STEERING MECHANISM

Visually inspect steering mechanism for tightness of components (steering arms, tie rods, ski bolts, ski legs, etc.).

# PROCEDURES

## SKI RUNNER

### Inspecting the Ski Runner

Refer to *INSPECTION*.

### Removing the Ski Runner

*Ski Without Adjustable Runner*

1. Lift the front of vehicle and support it off the ground.
2. Unscrew the ski runner nuts, then remove the ski runner.

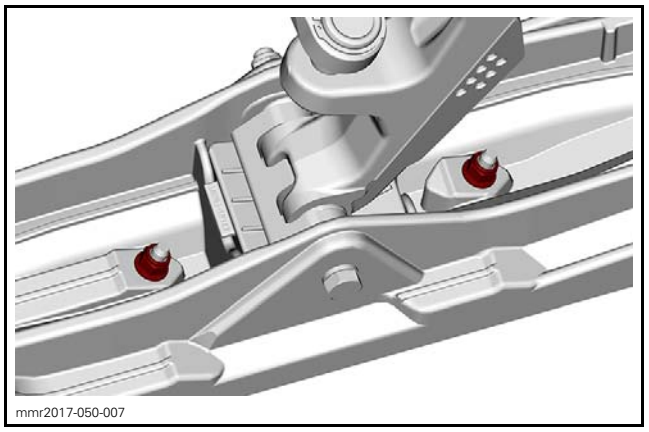
mmr2017-050-007

*Ski With Adjustable Runner*

1. Remove the ski.
2. Remove the pin.

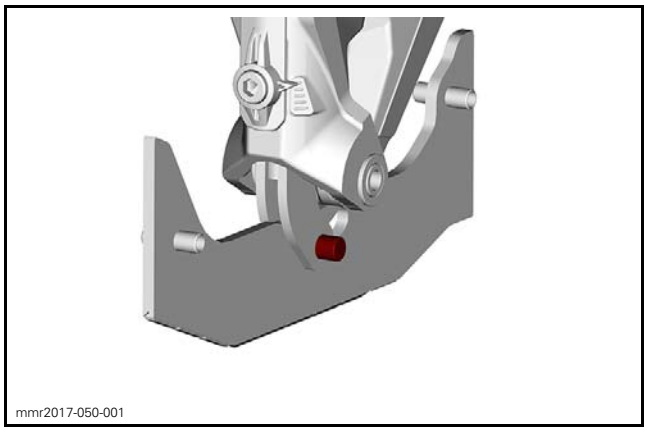
mmr2017-050-001

### Installing the Ski Runner

The installation is the reverse of the removal procedure. Pay attention to the following.

*Ski Without Adjustable Runner*

Tighten ski runner nuts to specification.

| TIGHTENING TORQUE | |
|---|---|
| Runner nut | 8 N•m ± 1 N•m (71 lbf•**in** ± 9 lbf•**in**) |

*Ski With Adjustable Runner*

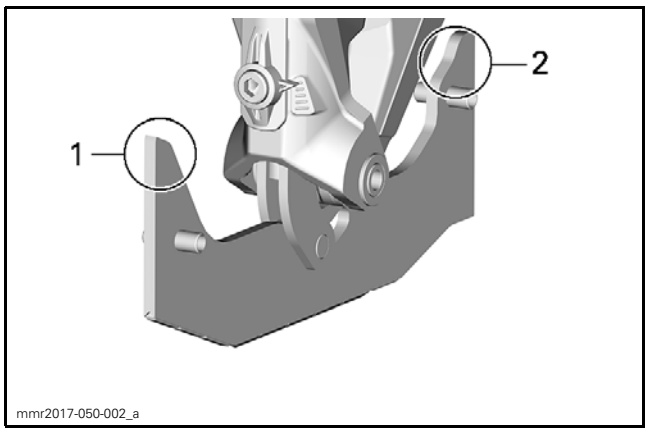


*1. Towards front*
*2. Towards rear*

# SKIS

## Inspecting the Ski

Refer to *INSPECTION*.

## Removing the Ski

1. Lift front of vehicle and support it off ground.
2. Unscrew nut then pull ski bolt out.

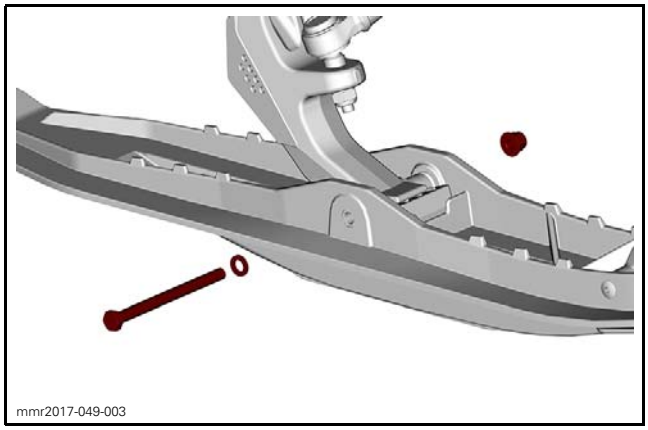


3. Remove ski from vehicle.

## Installing the Ski - Without Adjustable Runner

Make sure bushings are installed in ski holes.

Install the ski stopper. Position indicator in front and make sure the bump in the ski is in the groove of the ski stopper.

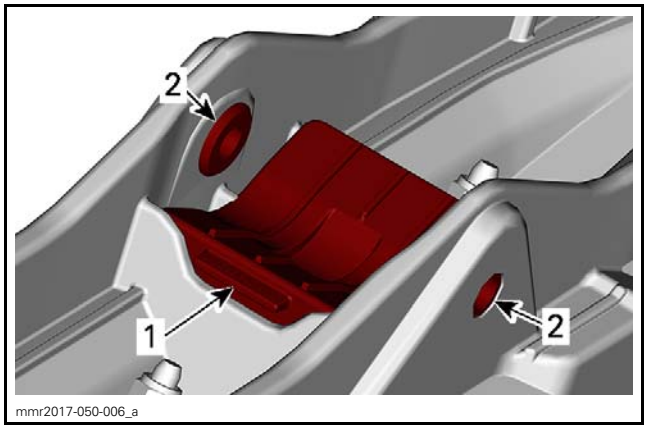


*1. Ski stopper*
*2. Bushings*

Apply grease on the ski axle.

| SERVICE PRODUCT |
|---|
| SYNTHETIC SUSPENSION GREASE (P/N 779163) |

*With Adjustable Ski Stance*

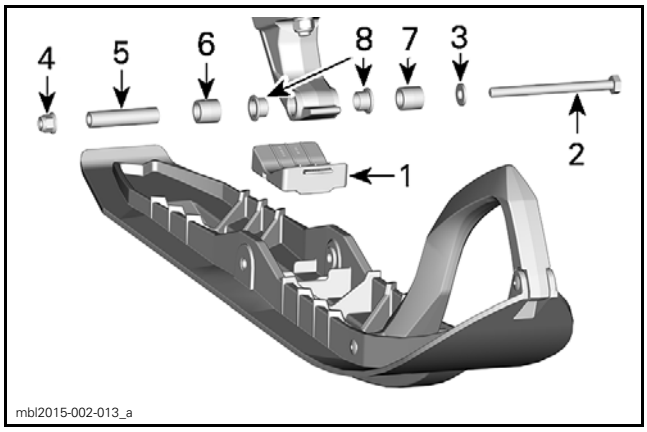


*LH SIDE SHOWN*
*1. Ski stopper*
*2. M10 x 130 screw*
*3. M10 flat washer*
*4. M10 flanged nut*
*5. Ski axel*
*6. Narrow adjustment*
*7. Wide adjustment*

Install the spacer inside for the narrower stance and outside for the wider stance.

**⚠ WARNING**

**Proceed to the same setting for both skis.**

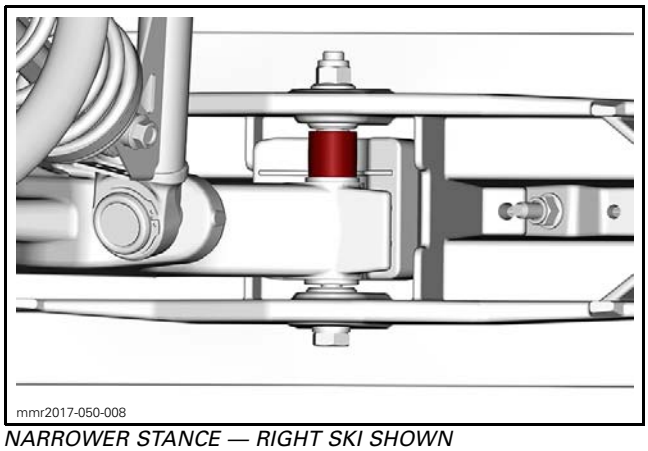


*NARROWER STANCE — RIGHT SKI SHOWN*

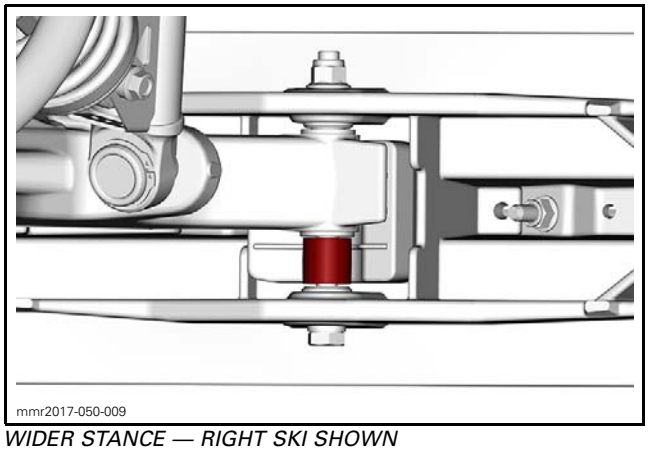


*WIDER STANCE — RIGHT SKI SHOWN*

### *Without Adjustable Ski Stance*

Install ski on ski leg as per the following illustrations.

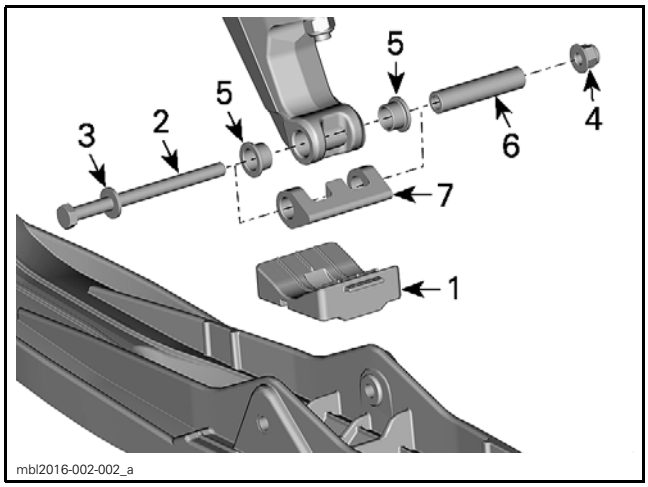


1. *Ski stopper*
2. *M10 x 130 screw*
3. *M10 flat washer*
4. *M10 flanged nut*
5. *Ski leg bushings*
6. *Ski Axle*
7. *Ski leg stopper*

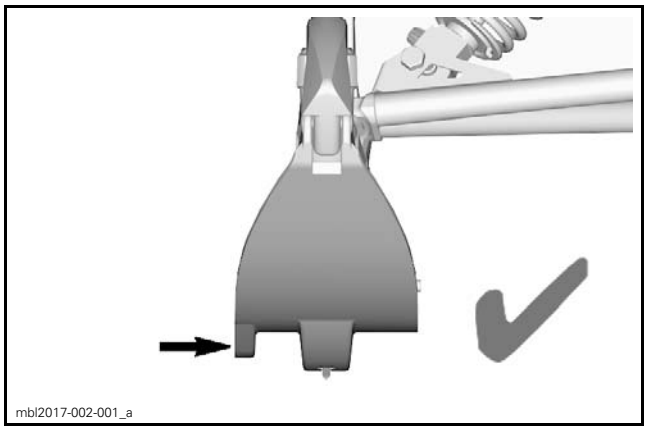


*LATERAL SKI KEEL TOWARDS OUTSIDE (IF EQUIPPED) - CORRECT*

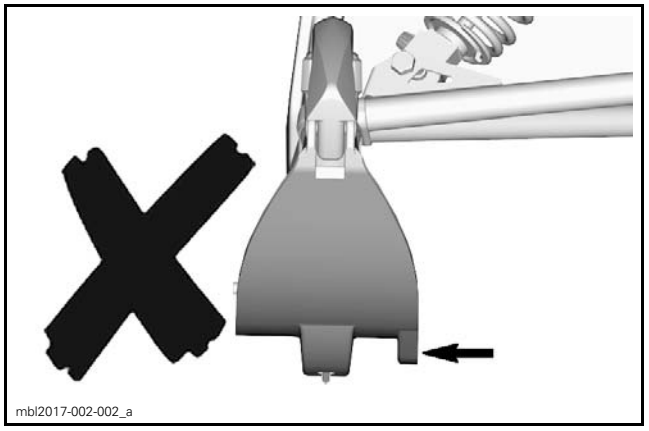


*LATERAL SKI KEEL TOWARDS INSIDE (IF EQUIPPED) - NOT CORRECT*

### *All Models*

| TIGHTENING TORQUE | |
|---|---|
| Ski nut | 48 N•m ± 6 N•m (35 lbf•ft ± 4 lbf•ft) |

## Installing the Ski With Adjustable Runner

Make sure bushings are installed in ski holes.

Install the ski stopper.

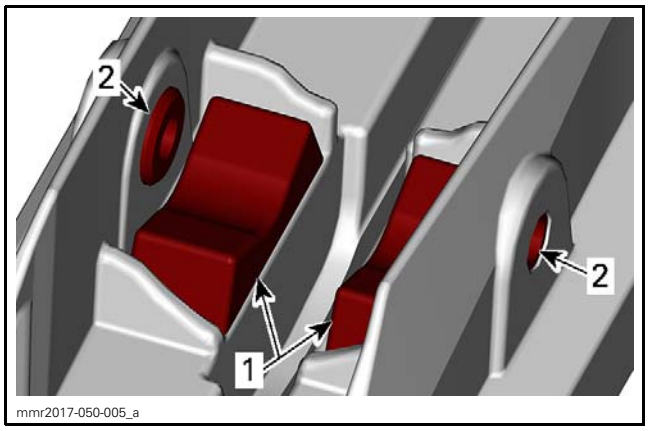


1. *Ski stopper*
2. *Bushings*

Install ski on ski leg as per the following illustrations.

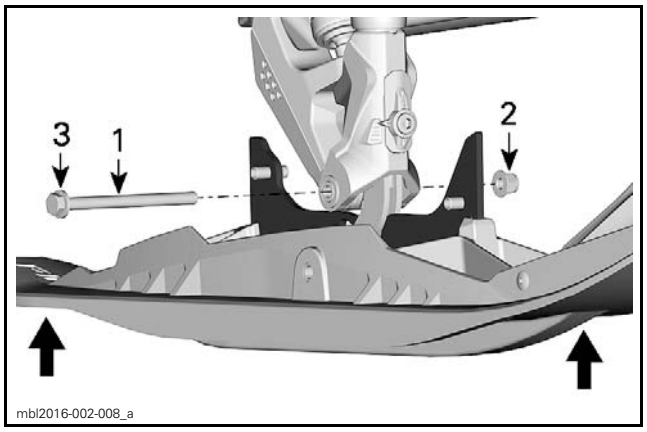


1. *Ski screw*
2. *Nut*
3. *Washer*

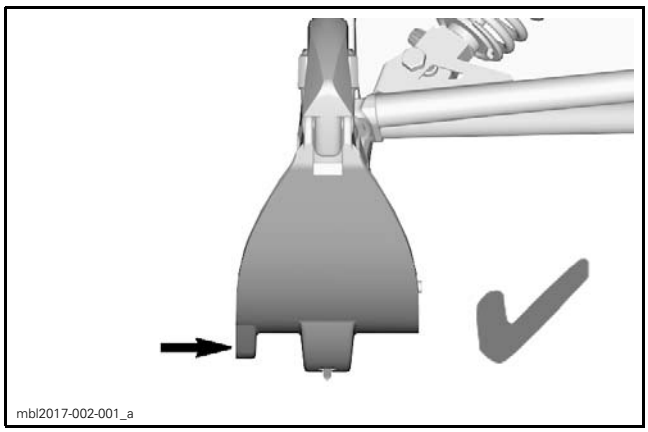


*LATERAL SKI KEEL TOWARDS OUTSIDE (IF EQUIPPED) - CORRECT*

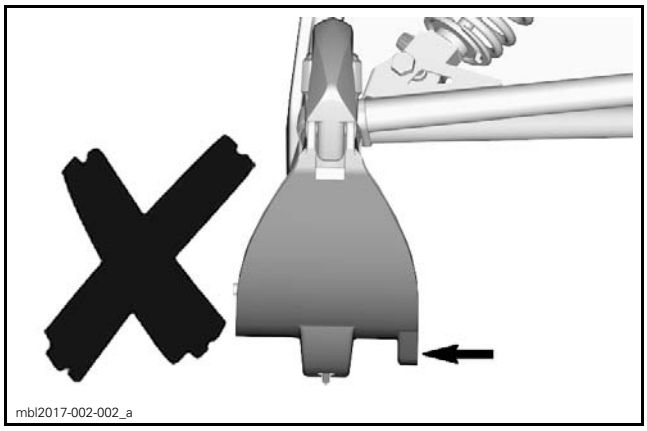


*LATERAL SKI KEEL TOWARDS INSIDE (IF EQUIPPED) - NOT CORRECT*

| TIGHTENING TORQUE | |
|---|---|
| Ski nut | 48 N•m ± 6 N•m (35 lbf•ft ± 4 lbf•ft) |

# ADJUSTABLE RUNNER MECHANISM

## Removing the Adjustable Runner Mechanism

1. Remove the ski and the runner.
2. Slide the sleeve out of the ski leg.

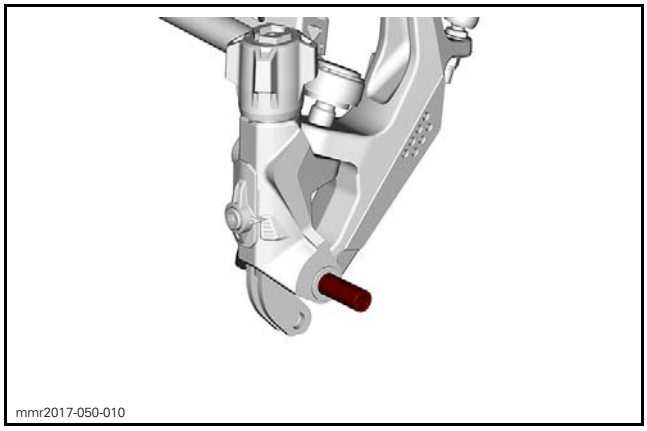


3. Remove the mechanism from the ski leg.

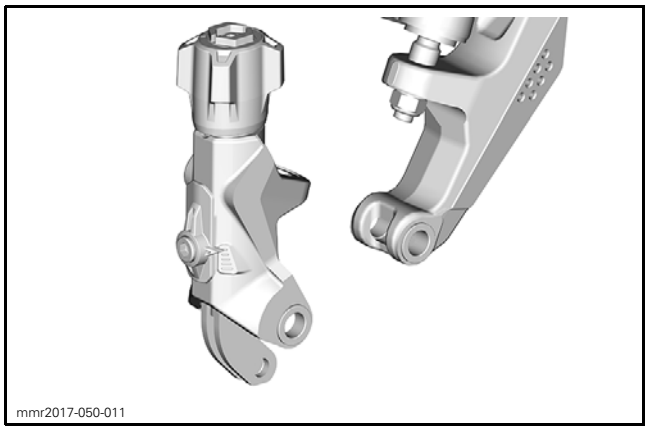
mmr2017-050-011

## Disassembling the Adjustable Runner Mechanism

1. Remove the adjusting knob and the indicator screws.

NOTE: There are two O-rings on the indicator screw.

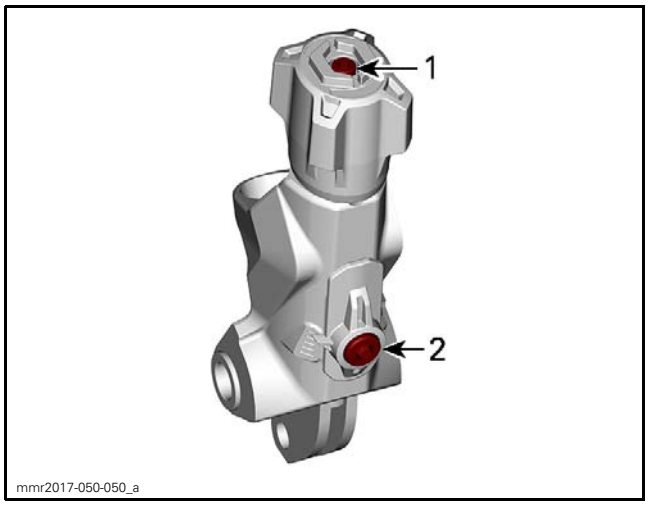

mmr2017-050-050_a

*1. Adjusting knob screw*
*2. Indicator screw*

2. Slide the adjusting screw and the adjusting shaft out of the body.

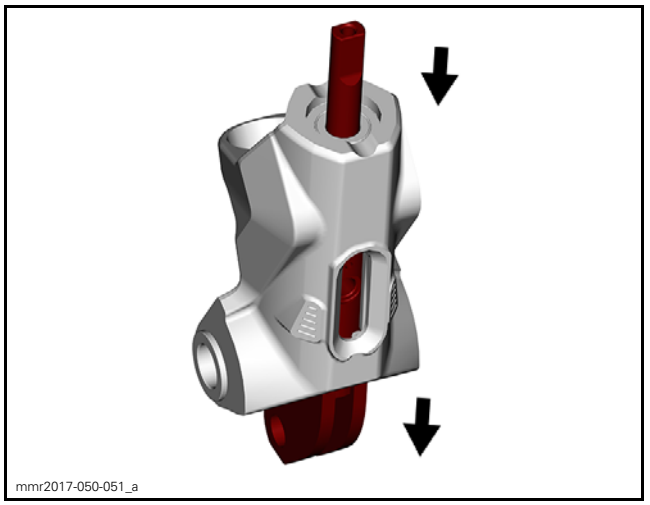
mmr2017-050-051_a

3. Remove the screw from the shaft.

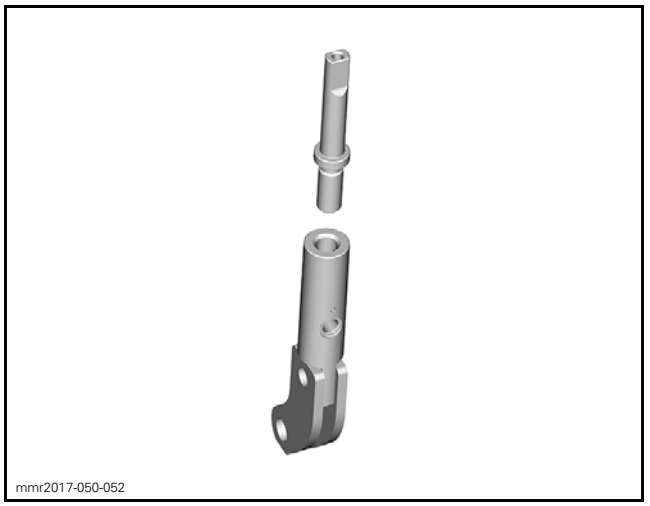
mmr2017-050-052

4. Clean the screw and the shaft inner threads with brake and parts cleaner and a small brush.

| SERVICE PRODUCT |
| --- |
| XPS BRAKES AND PARTS CLEANER (USA) (P/N 219 701 705) or XPS BRAKES AND PARTS CLEANER (P/N 219 701 776) |

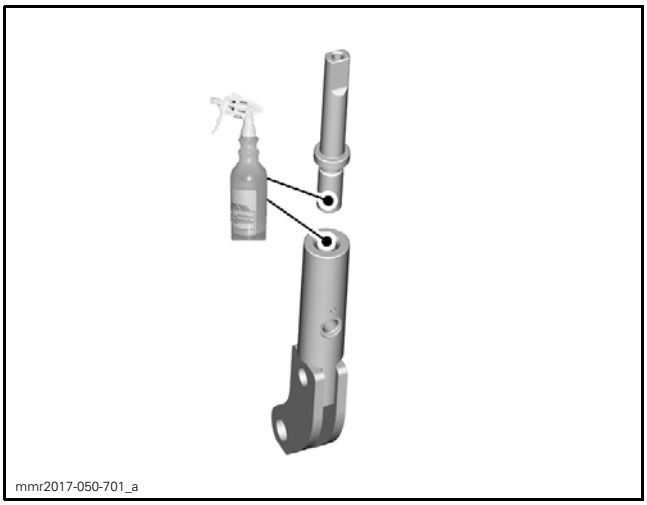
mmr2017-050-701_a

5. Remove the snap ring.

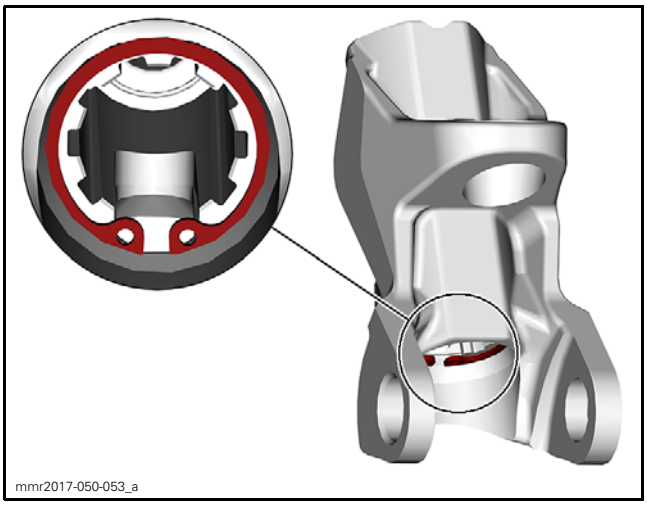
mmr2017-050-053_a

6. Slide the sleeve out of the body.

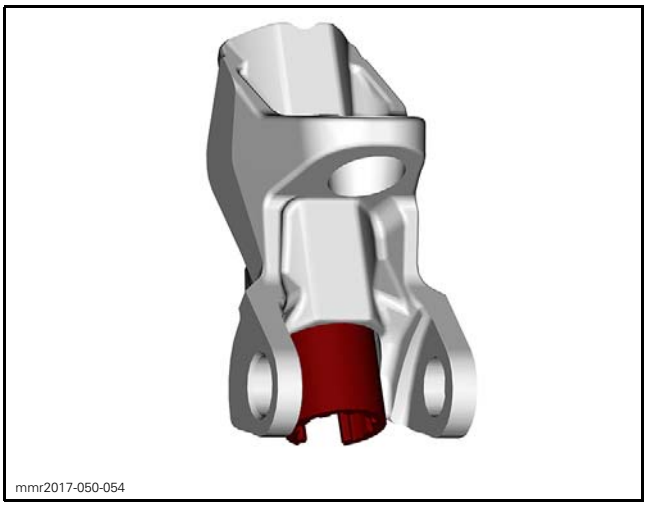
mmr2017-050-054

## Inspecting the Adjustable Runner Mechanism

Inspect the mechanism body for cracks. Replace if required.

Inspect the adjusting screw and shaft for:
– Thread damages
– Bending.
Replace if required.

Inspect the sleeve for:
– Cracks
– Spline damages
Replace if required.

Inspect the ball bearing. It should turn freely and smoothly. If bearing needs to be replaced, replace the mechanism assembly.

## Assembling the Adjustable Runner Mechanism

The assembly is the reverse of the disassembly procedure. However, pay attention to the following.

Apply grease on screw thread and shaft inner thread.

| SERVICE PRODUCT |
|---|
| SYNTHETIC GREASE (P/N 779162) |

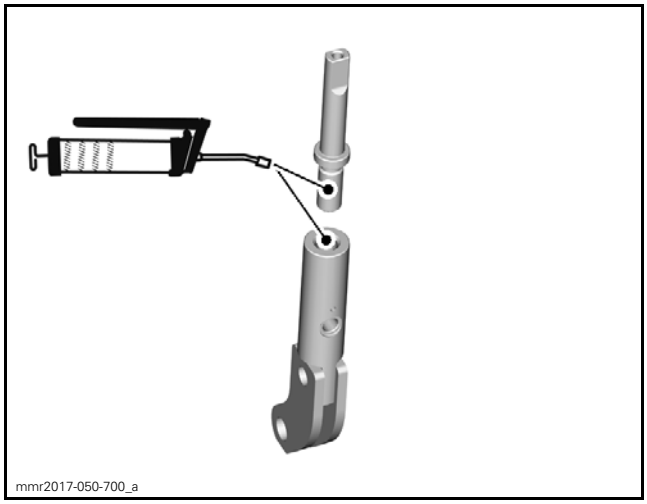
mmr2017-050-700_a

Install a new knob screw.

| TIGHTENING TORQUE | |
|---|---|
| Adjusting knob screw | 9 N•m ± 1 N•m (80 lbf•**in** ± 9 lbf•**in**) |
| Indicator screw | 24.5 N•m ± 3.5 N•m (18 lbf•ft ± 3 lbf•ft) |

## Installing the Adjustable Runner Mechanism

The installation is the reverse of the removing procedure. However, pay attention to the following.

Install rubber grommet on nut first. Align flat against flat.

Ensure all bushings, and the grommet are in place and fully seated.

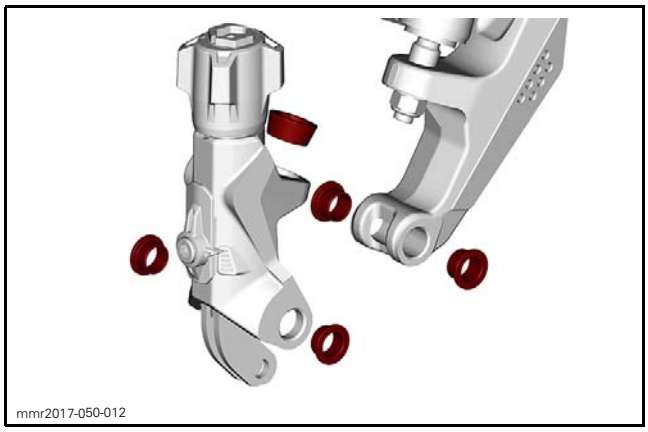


The mechanism is offset and has to be installed on the correct side.

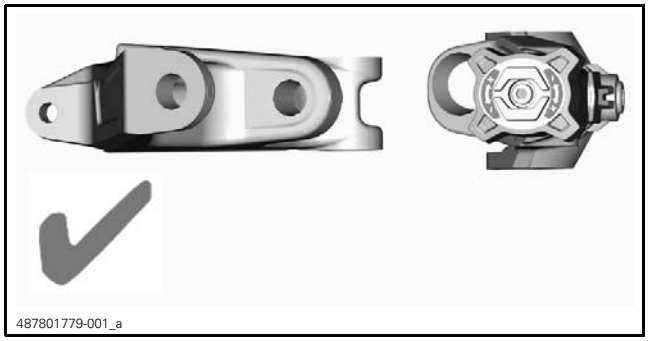


*RH SIDE SHOWN*

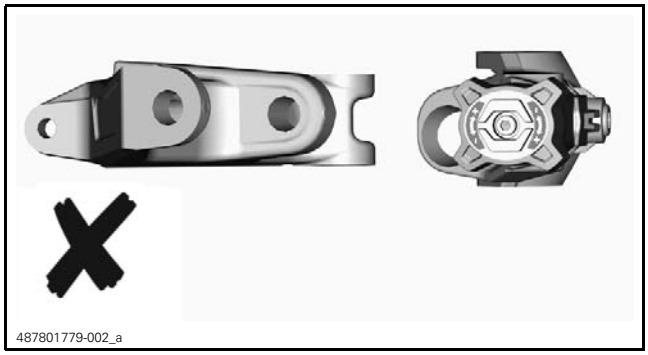


*RH SIDE SHOWN*

# SKI HANDLES

## Removing the Ski Handle

1. Remove ski from vehicle.
2. Using a 9 mm (3/8 in) drill bit, remove ski handle rivets. Only drill the head of rivet. Do not try to drill all the way through the rivet. Angle the drill bit to reduce the chance of spinning the rivet in the ski.
3. Remove handle from ski.
4. Place handle in hot water for 10 minutes then using a punch, drive the inner part of rivet out of handle.

## Installing the Ski Handle

1. To install rivets, use a C-clamp and a short 10 mm socket.
2. Place a rivet in position and insert it into ski and ski handle. Repeat the procedure for the other side.

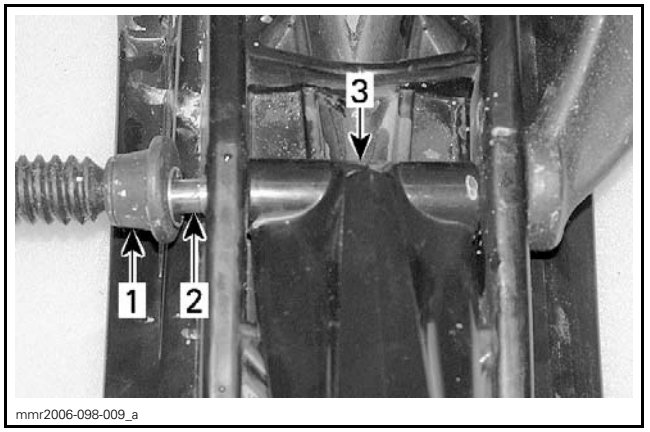


1. *C-clamp*
2. *Rivet*
3. *Handle*

3. When both rivets are installed, use the short 10 mm socket to push rivet heads against the ski.

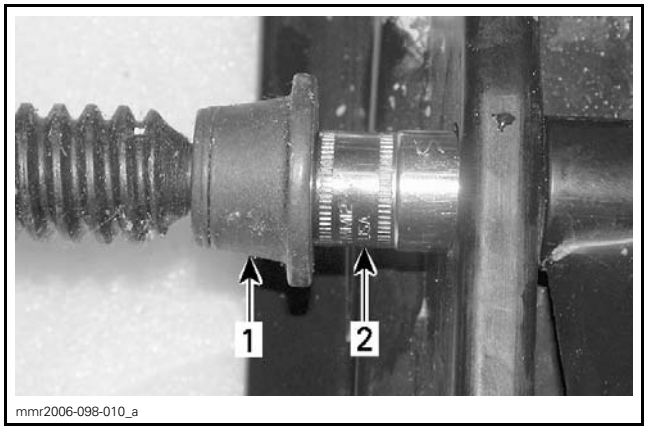


1. *C-clamp*
2. *10 mm socket*

# SKI LEG

To replace a ski leg, refer to *FRONT SUSPENSION* subsection.

# HANDLEBAR GRIP

To verify or replace heating elements, refer to *ACCESSORIES* subsection.

## Removing the Handlebar Grip

Remove grips by pulling while using compressed air, which will inflate or loosen the fit between the grip and handlebar.


mmr2015-143-007

## Installing the Handlebar Grip

Insert the handlebar grip on handlebar while blowing compressed air to inflate or loosen the fit between grip and handlebar.

# MULTIFUNCTION SWITCH

## Removing the Multifunction Switch

1. Remove the gauge support. Refer to *BODY* subsection.
2. Disconnect the multifunction switch connector.

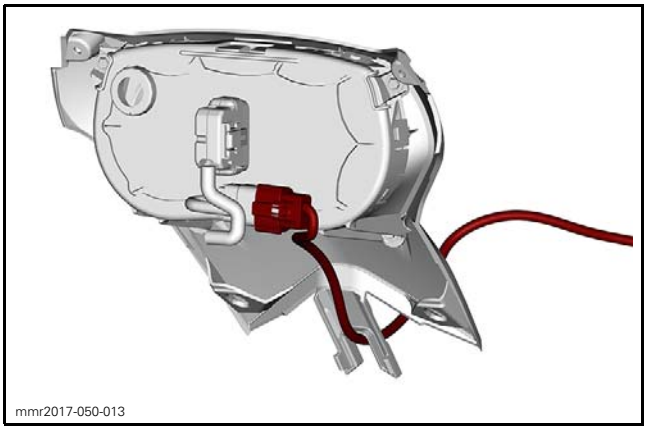
mmr2017-050-013

3. Cut locking ties securing multifunction switch harness.

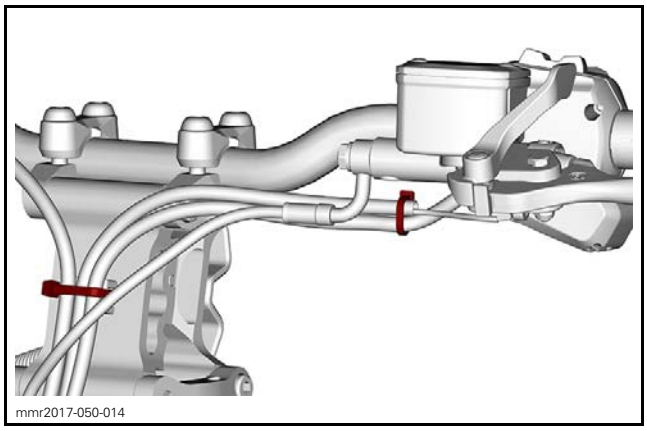
mmr2017-050-014

4. Unscrew master cylinder from handlebar.

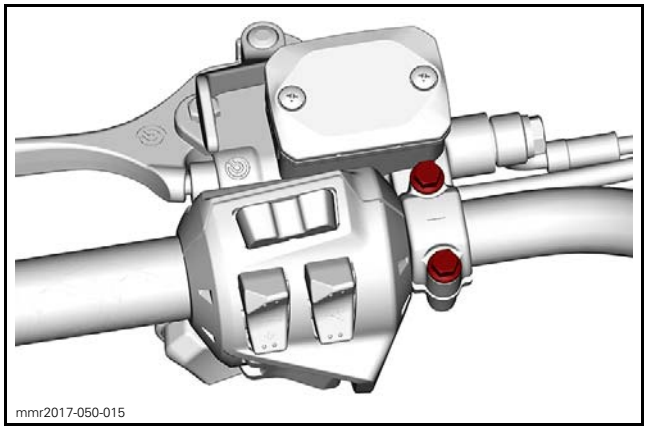
mmr2017-050-015

5. Remove master cylinder.

**NOTICE** **Do not let master cylinder hang by the hose and do not stretch or twist the hose.**

6. Remove multifunction switch screws.

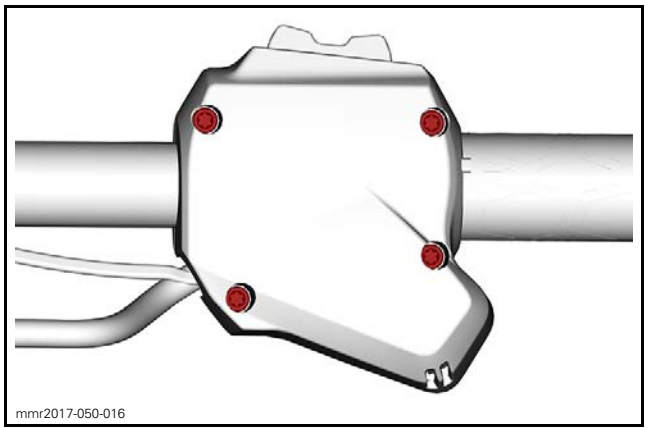
mmr2017-050-016

7. Remove multifunction switch from vehicle.

## Installing the Multifunction Switch

The installation is the reverse of the removal procedure. However, pay attention to the following.

Tighten the multifunction switch screws to specification, as per the following sequence.

| TIGHTENING TORQUE | |
|---|---|
| Multifunction switch screw | 2.4 N•m ± 0.2 N•m (21 lbf•**in** ± 2 lbf•**in**) |

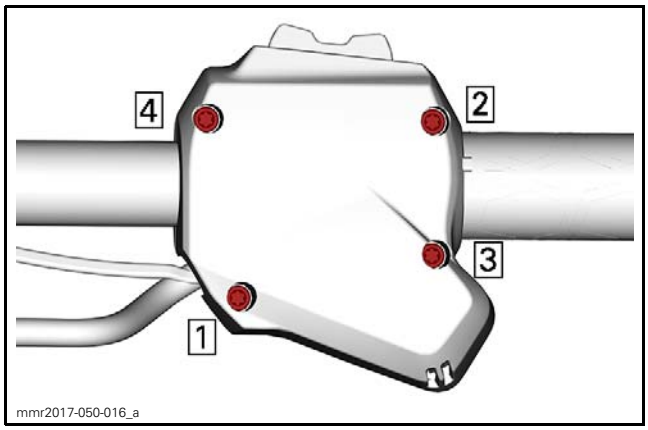


*TRAIL AND CROSSOVER MODELS*

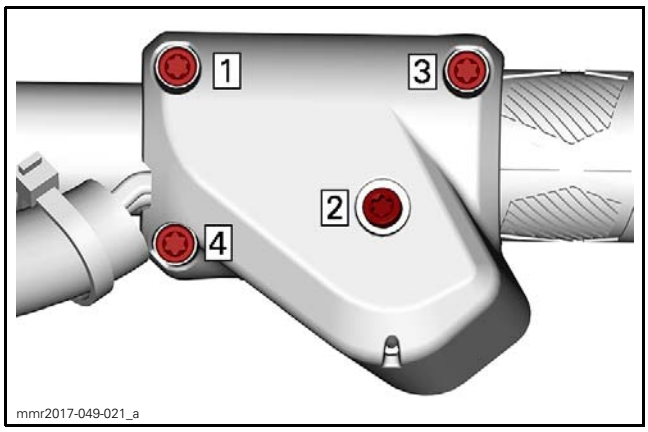


*MOUNTAIN MODELS*

Place the master cylinder on the handlebar.

Install master cylinder retaining clamp with its arrow pointing toward the front of vehicle.

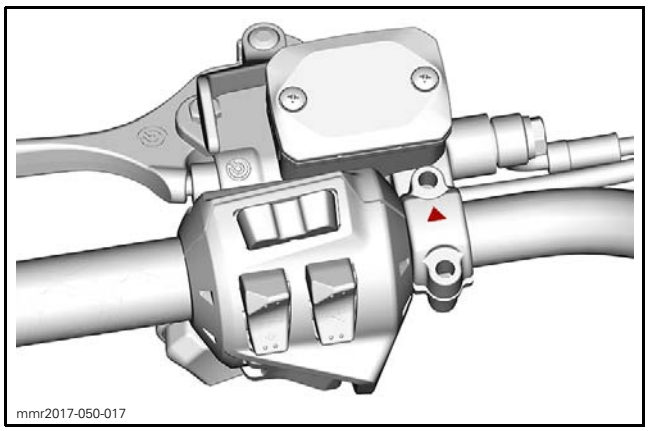


Install master cylinder clamp screws and tighten loosely.

With the handlebar in the straight ahead position, place the reservoir parallel to the ground.

Tighten master cylinder clamp screws to specification.

| TIGHTENING TORQUE | |
|---|---|
| Master cylinder clamp screws | 9 N•m ± 1 N•m (80 lbf•**in** ± 9 lbf•**in**) |

Turn handlebar completely from side to side making sure it does not exert unwanted tension on handlebar wires.

# THROTTLE LEVER HOUSING (iTC)

## Removing the Throttle Lever Housing

1. Remove the upper body module. Refer to *BODY* subsection.
2. From the RH side of vehicle, disconnect the throttle lever connector.
3. Disconnect *RH* steering connector (6-pin).

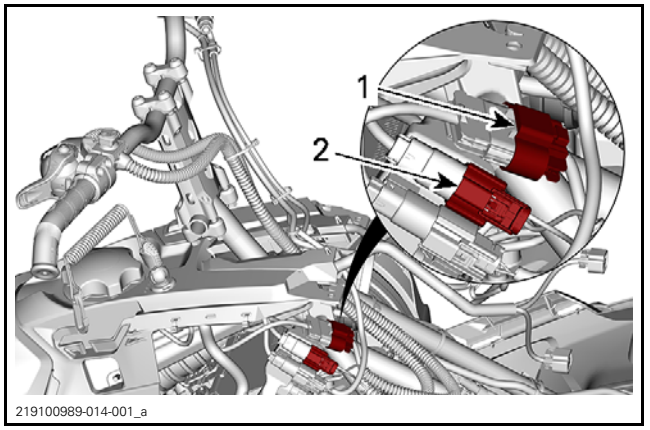


1. *Throttle lever connector*
2. *RH steering connector*

4. Cut locking ties securing the throttle lever harness.
5. Remove the throttle lever housing and emergency stop switch support retaining screws.

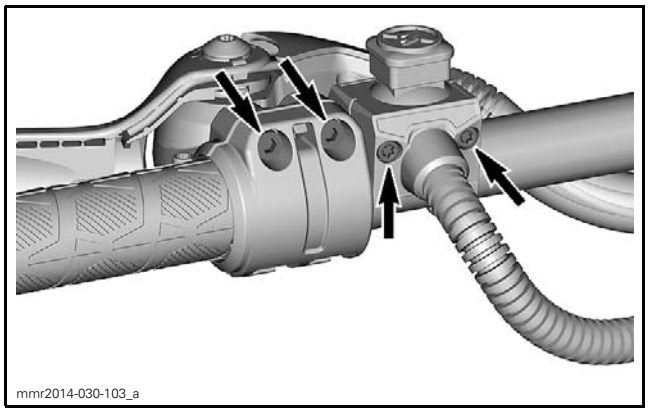
mmr2014-030-103_a

## Installing the Throttle Lever Housing

The installation is the reverse of the removal procedure. However, pay attention to the following.

Tighten emergency stop switch support retaining screws to specification.

| TIGHTENING TORQUE | |
|---|---|
| Emergency stop switch support retaining screws | 2 N•m ± 0.5 N•m (18 lbf•**in** ± 4 lbf•**in**) |

Tighten the throttle lever housing retaining screws to specification.

| TIGHTENING TORQUE | |
|---|---|
| Throttle lever housing retaining screws | 1.9 N•m ± 0.1 N•m (17 lbf•**in** ± 1 lbf•**in**) |

Turn handlebar completely from side to side making sure it does not exert unwanted tension on handlebar wires.

# HANDLEBAR

## Removing the Handlebar

NOTE: If the handlebar must be changed, remove all components (handlebar grip, throttle lever housing, etc.) before removing it from vehicle.

1. Remove handlebar retaining clamp screws.

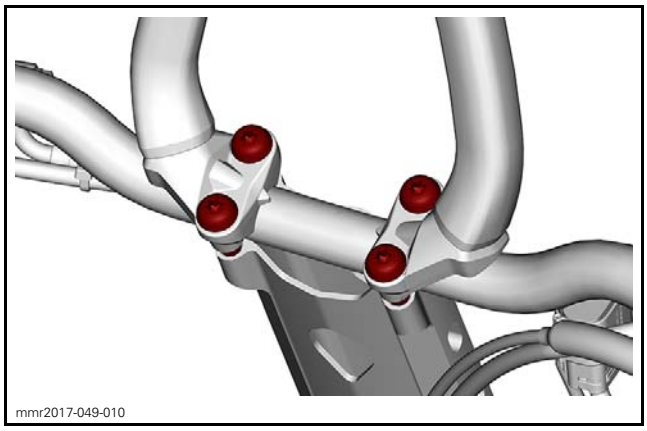
mmr2017-049-010

2. Remove handlebar from handlebar extension.

## Inspecting the Handlebar

1. Inspect the handlebar for:
   – Damages
   – Cracks
   – Bending.
2. Replace if any of these problems is detected.

**⚠ WARNING**

**Do not try to repair a defective handlebar.**

3. Check handlebar clamps for cracks or distortion, replace if necessary.

## Installing the Handlebar

The installation is the reverse of the removal procedure. However, pay attention to the following.

### *With Adjustable Handlebar*

Position the handlebar at +2 with clamps.

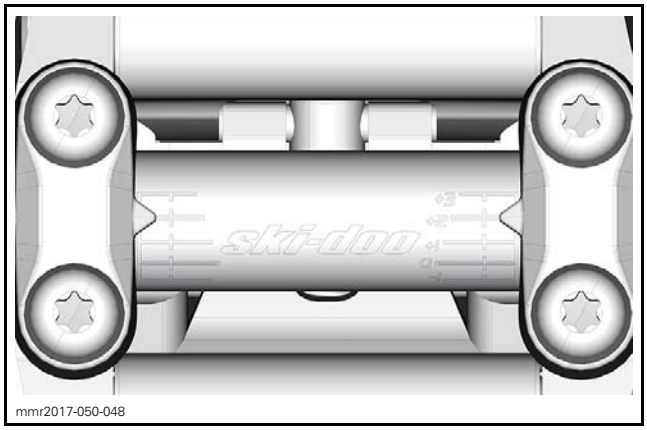

mmr2017-050-048

### *Without Adjustable Handlebar*

Position the handlebar with clamps, as per the following table.

| MODEL | HANDLEBAR POSITION |
|---|---|
| All | +1 |

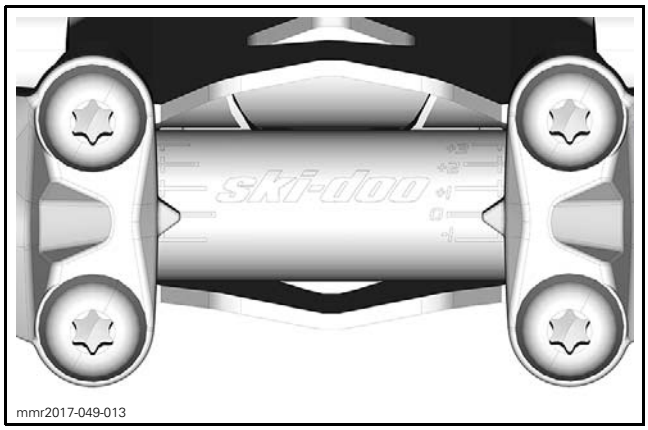


*HANDLEBAR POSITION - MOUNTAIN MODEL SHOWN*

Tighten handlebar clamps screws to specification.

| TIGHTENING TORQUE | |
|---|---|
| Clamp screws | 24.5 N•m ± 3.5 N•m (18 lbf•ft ± 3 lbf•ft) |

Ensure handlebar clamps are parallel with handlebar extension.

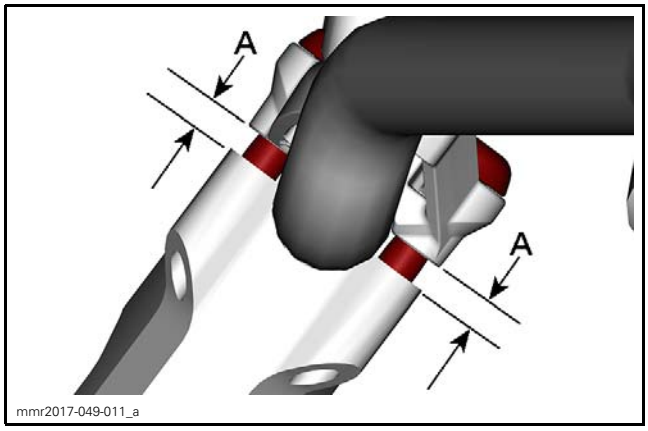


*A. Must be equal on each side*

Turn handlebar completely from side to side making sure it does not exert unwanted tension on handlebar wires.

# HANDLEBAR EXTENSION

## Removing the Handlebar Extension

1. Proceed with *REMOVING THE HANDLEBAR*, see procedure in this subsection.
2. Remove screws retaining the extension to steering column.

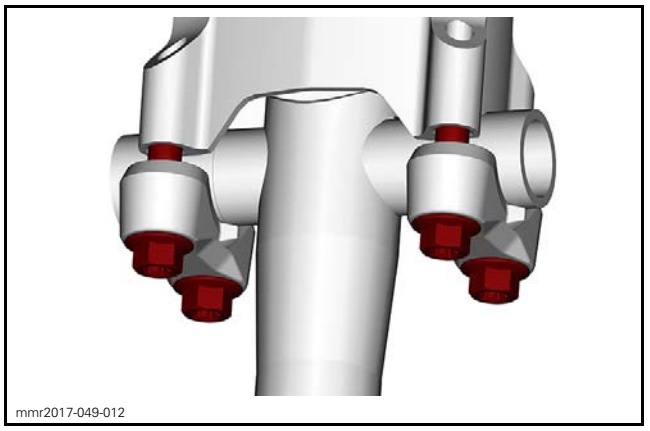


3. Remove handlebar extension from vehicle.

## Inspecting the Handlebar Extension

1. Check handlebar extension for:
   - Cracks
   - Bending
   - Other damages.
2. Replace if any of these problems is detected.

**⚠ WARNING**

**Do not try to repair a defective handlebar extension.**

## Installing the Handlebar Extension

The installation is the reverse of the removal procedure. However, pay attention to the following.

### *With Adjustable Handlebar*

Position the extension in order to have the handlebar horizontal.

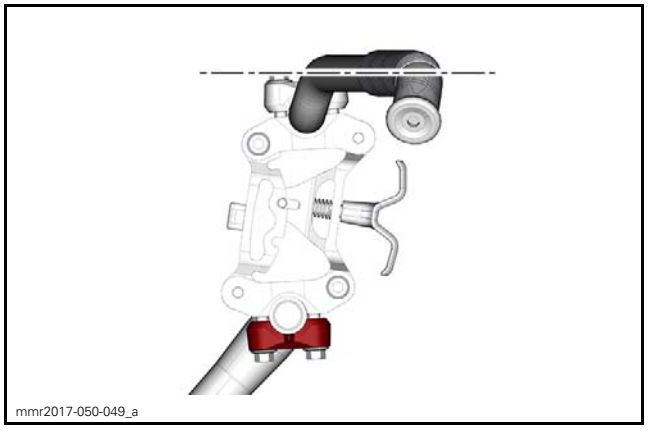


### *Without Adjustable Handlebar*

Position the extension with the steering column, as per the following table.

| MODEL | HANDLEBAR EXTENSION POSITION ANGLE |
|---|---|
| All | 159° |

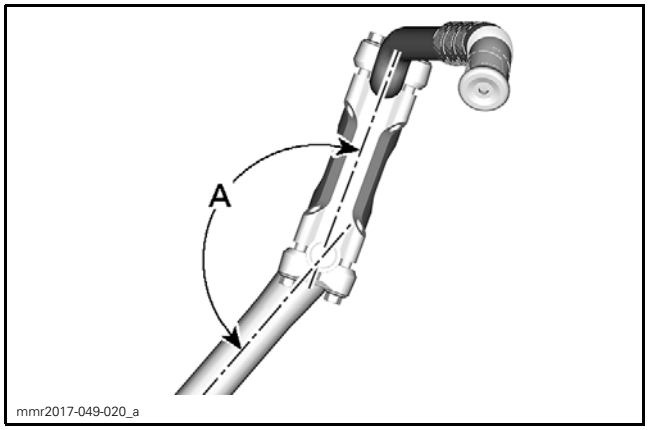


Ensure extension clamps are parallel with handlebar extension.

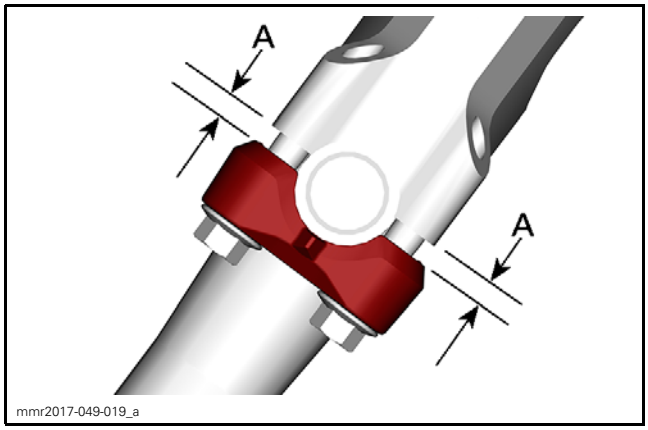


*A. Must be equal on each side*

**⚠ WARNING**

**Handlebar and it's components must not get in contact with anything (windshield, fuel tank cap, etc.) when steering is turned.**

# TIE-RODS

NOTE: The same procedure is applied on RH and LH side.

## Inspecting the Tie-Rod

Check tie-rod ends for looseness. If play is excessive, replace tie-rod.

Check if the tie-rod is bent, cracked or otherwise damaged. Replace if necessary.

## Removing the Tie-Rod

### *With 900 ACE Turbo*

1. Remove the intercooler. Refer to *INTERCOOLER* subsection.

### *All Models*

2. Remove the tie-rod end nuts and screws from the steering column and ski leg.

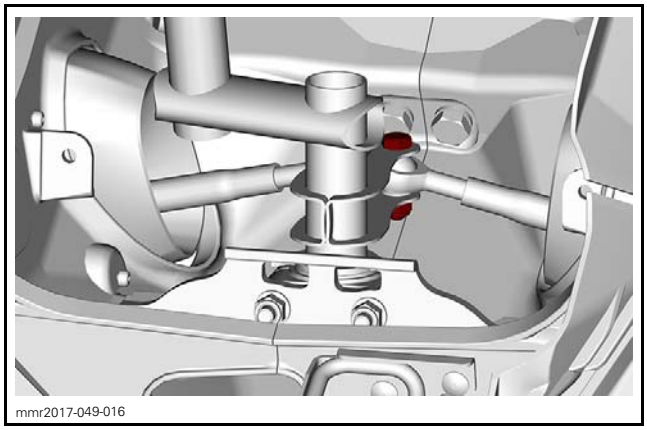


*STEERING COLUMN WITH PITMAN ARM*

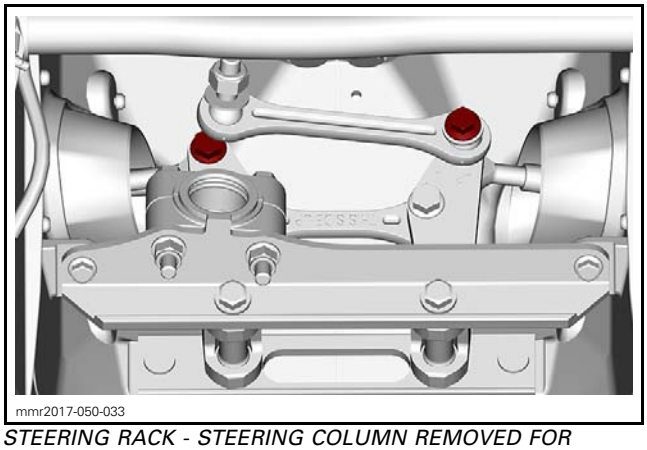


*STEERING RACK - STEERING COLUMN REMOVED FOR CLARITY*

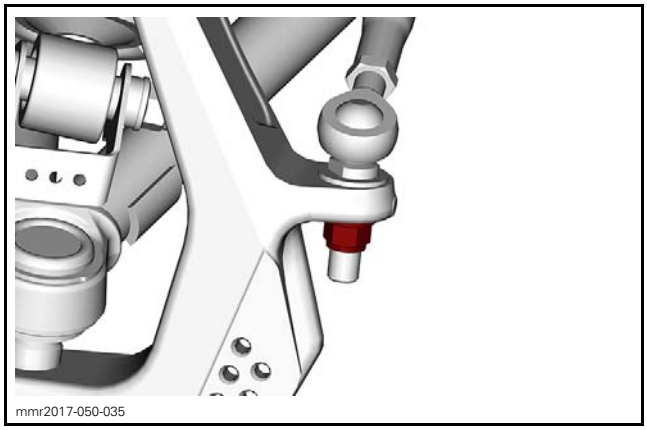


*SKI LEG*

3. Cut the locking tie on the steering boot.

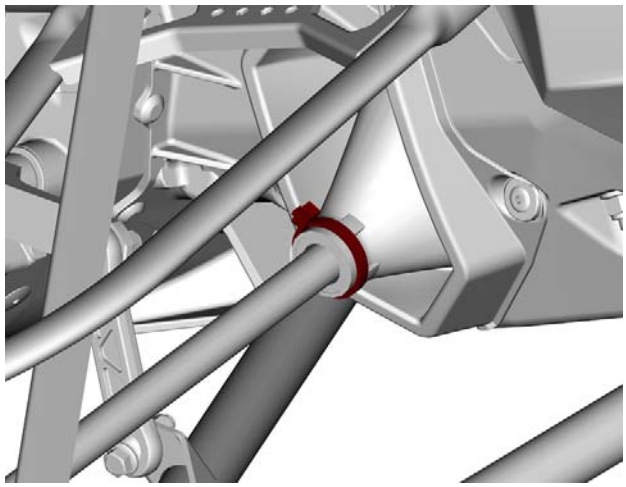
mmr2017-050-059

4. Remove tie-rod with ring from vehicle.

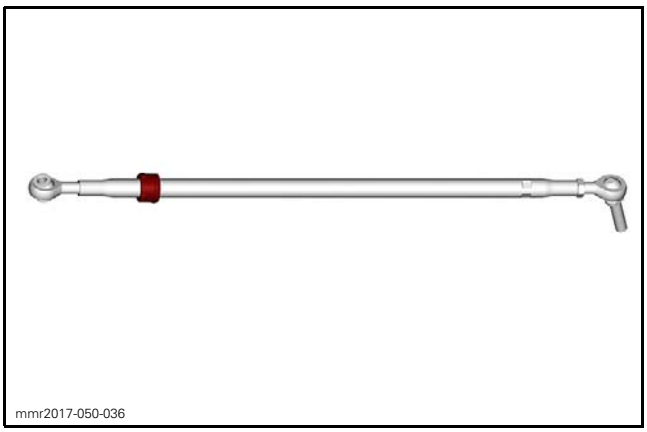
mmr2017-050-036

## Installing the Tie-Rod

The installation is the reverse of the removal procedure. However, pay attention to the following.

Adjust the length of all tie-rod end to specification without tightening the jam nuts.

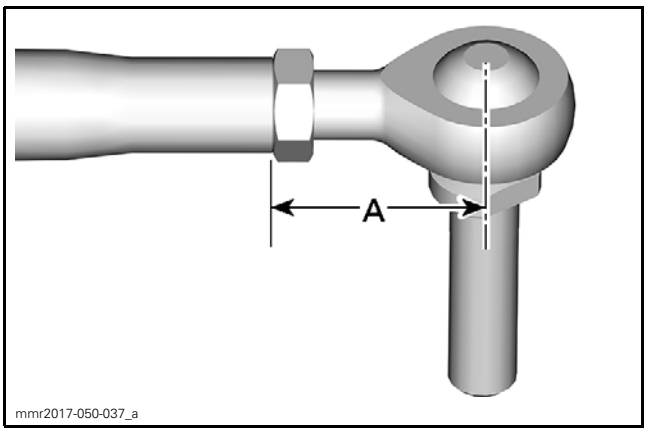

mmr2017-050-037_a

| TIE-ROD LENGTH (A) |
| --- |
| 30 mm (1.181 in) |

**⚠ WARNING**

**The maximum tie-rod end length (A) not engaged in the tie rod must not exceed 34 mm (1.339 in).**

Install tie-rod with the groove on ski leg side.

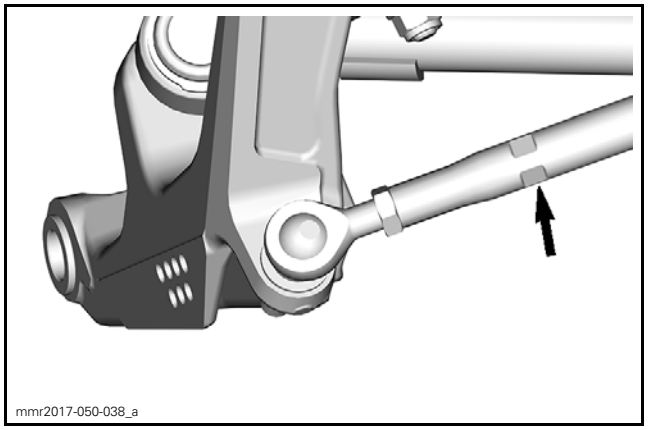
mmr2017-050-038_a

Install the washer and the nut, and tighten to specification.

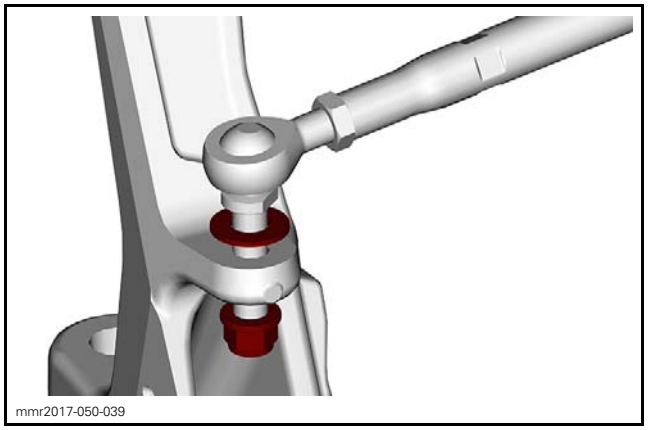
mmr2017-050-039

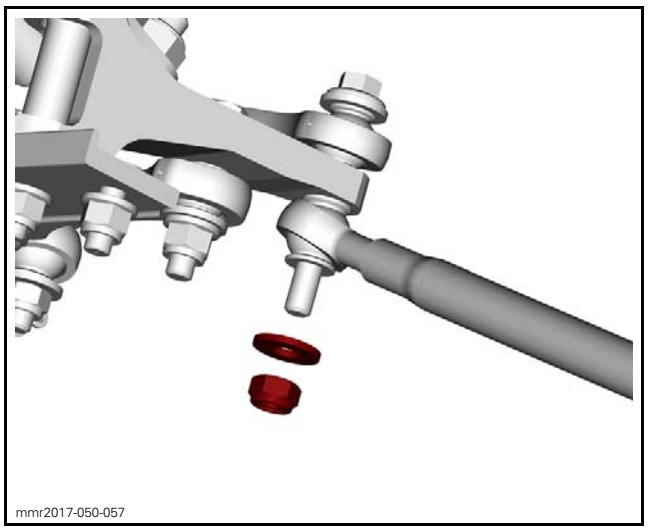
mmr2017-050-057

| TIGHTENING TORQUE | |
|---|---|
| Outer tie-rod end nut | 48 N•m ± 6 N•m (35 lbf•ft ± 4 lbf•ft) |
| Inner tie-rod end nut | 24.5 N•m ± 3.5 N•m (18 lbf•ft ± 3 lbf•ft) |

Ensure the new locking tie is fully seated and the head is positioned upwards.

**NOTICE** To avoid bellows damage, make sure locking tie head is positioned upwards.

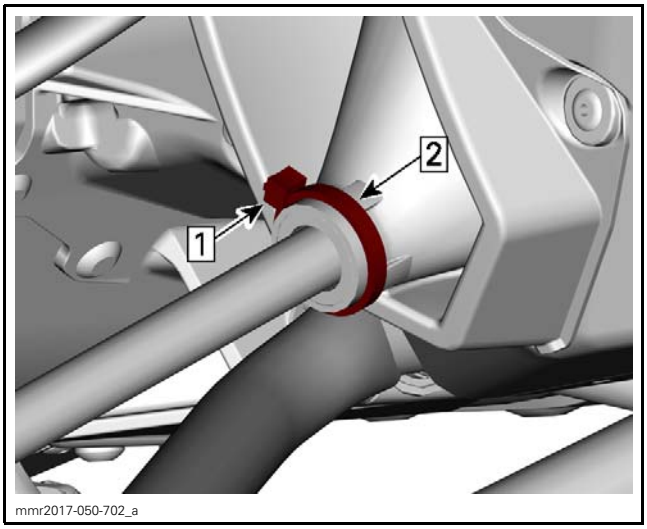

mmr2017-050-702_a

1. *Head up*
2. *Fully seated*

Perform the steering alignment, refer to *ALIGNING THE STEERING* in this section.

# STEERING COLUMN

## Removing the Steering Column - With Pitman Arm

### *With 900 ACE Turbo*

1. Remove the intercooler. Refer to *INTERCOOLER* subsection.

### *All Models*

2. Remove the rear console. Refer to *BODY* subsection.
3. Remove *HANDLEBAR EXTENSION* from steering column. Refer to the procedure in this subsection.
4. Remove the inner tie-rod end nuts and screws. Refer to *TIE-RODS* in this subsection.
5. Remove nuts and screws securing steering column upper support.

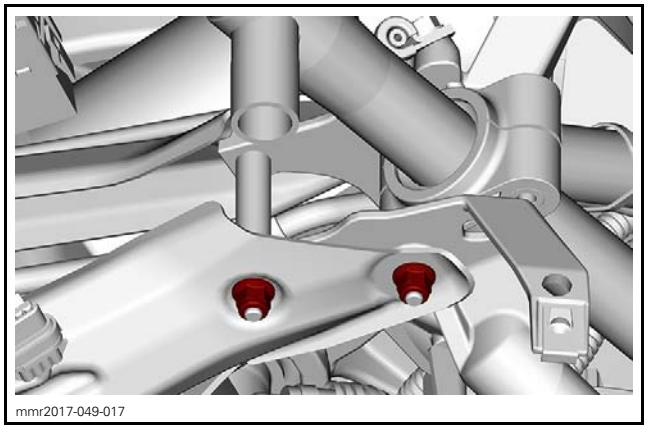
mmr2017-049-017

*FRONTWARD POSITION COLUMN*

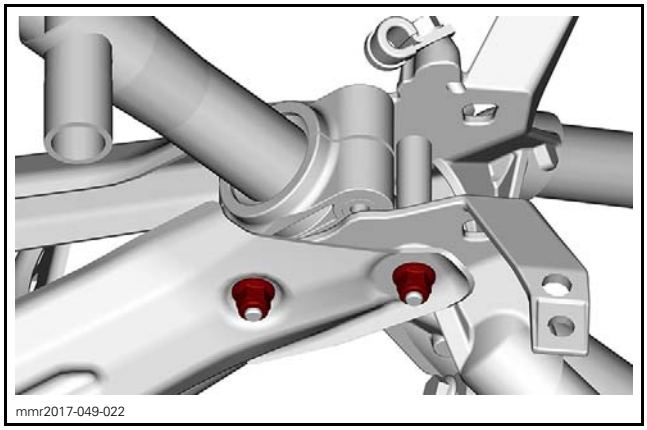
mmr2017-049-022

*REARWARD POSITION COLUMN*

6. Remove nuts and screws securing the steering column lower support.

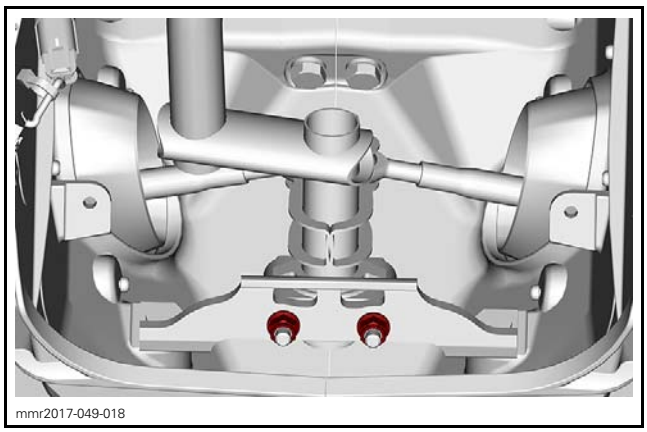
mmr2017-049-018

7. Pull steering column from top.

## Removing the Steering Column - With Steering Rack

### *With 900 ACE Turbo*

1. Remove the intercooler. Refer to *INTERCOOLER* subsection.

*All Models*

2. Remove the rear console. Refer to *BODY* subsection.
3. Remove *HANDLEBAR EXTENSION* from steering column. Refer to the procedure in this subsection.
4. Remove nuts and screws securing steering column upper support.

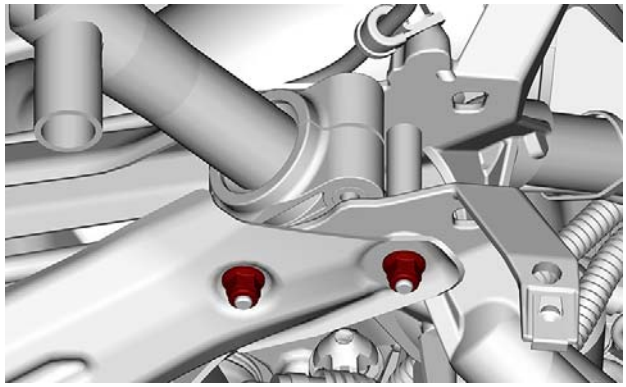
mmr2017-050-040

5. From inside engine compartment, remove the steering column pitman arm nut.

NOTE: Use an Allen key to lock the ball joint.

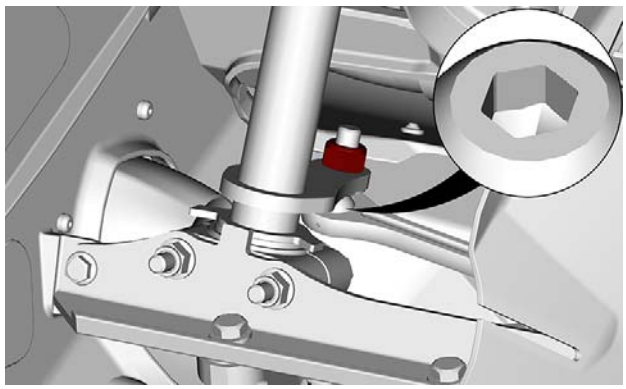
mmr2017-050-041

6. Remove nuts, stopper plate and screws securing the steering column lower support.

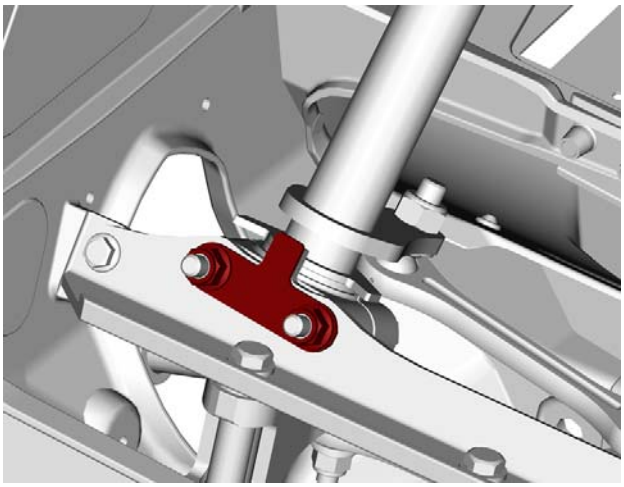
mmr2017-050-058

7. Pull steering column from top.

## Inspecting the Steering Column

Check if steering column is:
- Cracked
- Bent
- Twisted
- Otherwise damaged.

Replace steering column if necessary.

**⚠ WARNING**

**Do not try to repair a defective steering column.**

## Installing the Steering Column

The installation is the reverse of the removal procedure. However, pay attention to the followings.

1. Apply grease on vibration dampers before installing upper and lower supports.

| SERVICE PRODUCT |
|---|
| SYNTHETIC SUSPENSION GREASE (P/N 779163) |

2. Install new elastic nuts on the steering column retaining screws.
3. Tighten nuts to specification.

| TIGHTENING TORQUE | |
|---|---|
| Upper steering column support nut | 12.5 N•m ± 2.5 N•m (111 lbf•**in** ± 22 lbf•**in**) |
| Lower steering column support nut | 23.5 N•m ± 3.5 N•m (17 lbf•ft ± 3 lbf•ft) |

# STEERING RACK

## Inspecting the Steering Rack

### *With 900 ACE Turbo*

Remove the intercooler. Refer to *INTERCOOLER* subsection.

### *All Models*

Check if steering rack component are:
– Cracked
– Bent
– Twisted
– Otherwise damaged.

Check steering rack for looseness.

Check if stopper plate is deformed or otherwise damaged.

Replace component if necessary.

## Removing the Steering Rack

### *With 900 ACE Turbo*

1. Remove the intercooler. Refer to *INTERCOOLER* subsection.

### *All Models*

2. Remove inner tie-rod end nuts and screws.
3. Remove the nuts, stopper plate and screws as per the following illustrations.

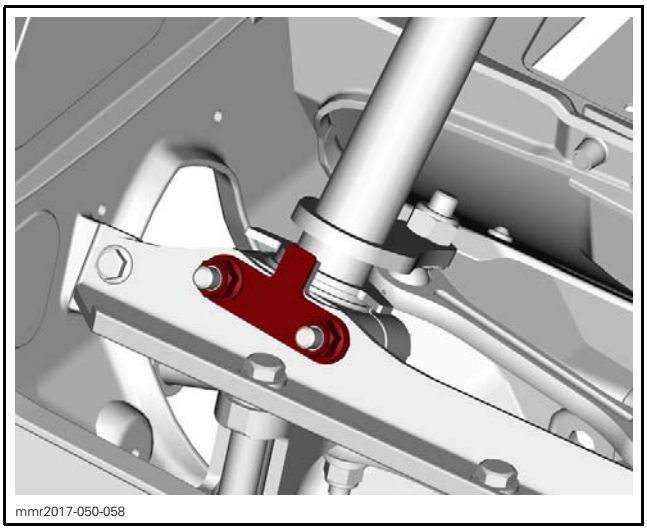
mmr2017-050-058
*INSIDE ENGINE COMPARTMENT*

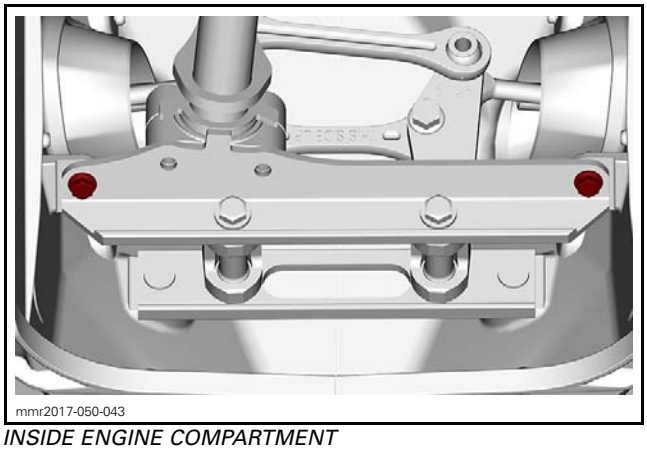
mmr2017-050-043
*INSIDE ENGINE COMPARTMENT*

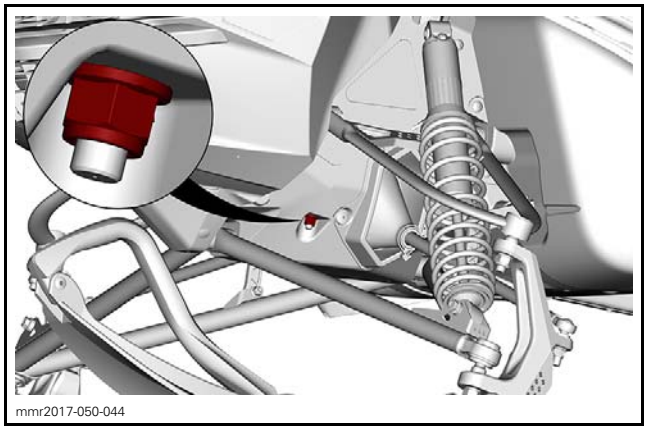
mmr2017-050-044

## Installing the Steering Rack

The installation is the reverse of the removal procedure.

# BODY

## SERVICE TOOLS

| Description | Part Number | Page |
|---|---|---|
| SUPERTANIUM DRILL BIT 3/16" | 529 031 800 | 608 |

## SERVICE PRODUCTS

| Description | Part Number | Page |
|---|---|---|
| XPS ATV CLEANING KIT | 219 701 713 | 602 |
| XPS ATV FINISHING SPRAY | 219 701 704 | 602 |
| XPS ATV WASH | 219 701 702 | 602 |

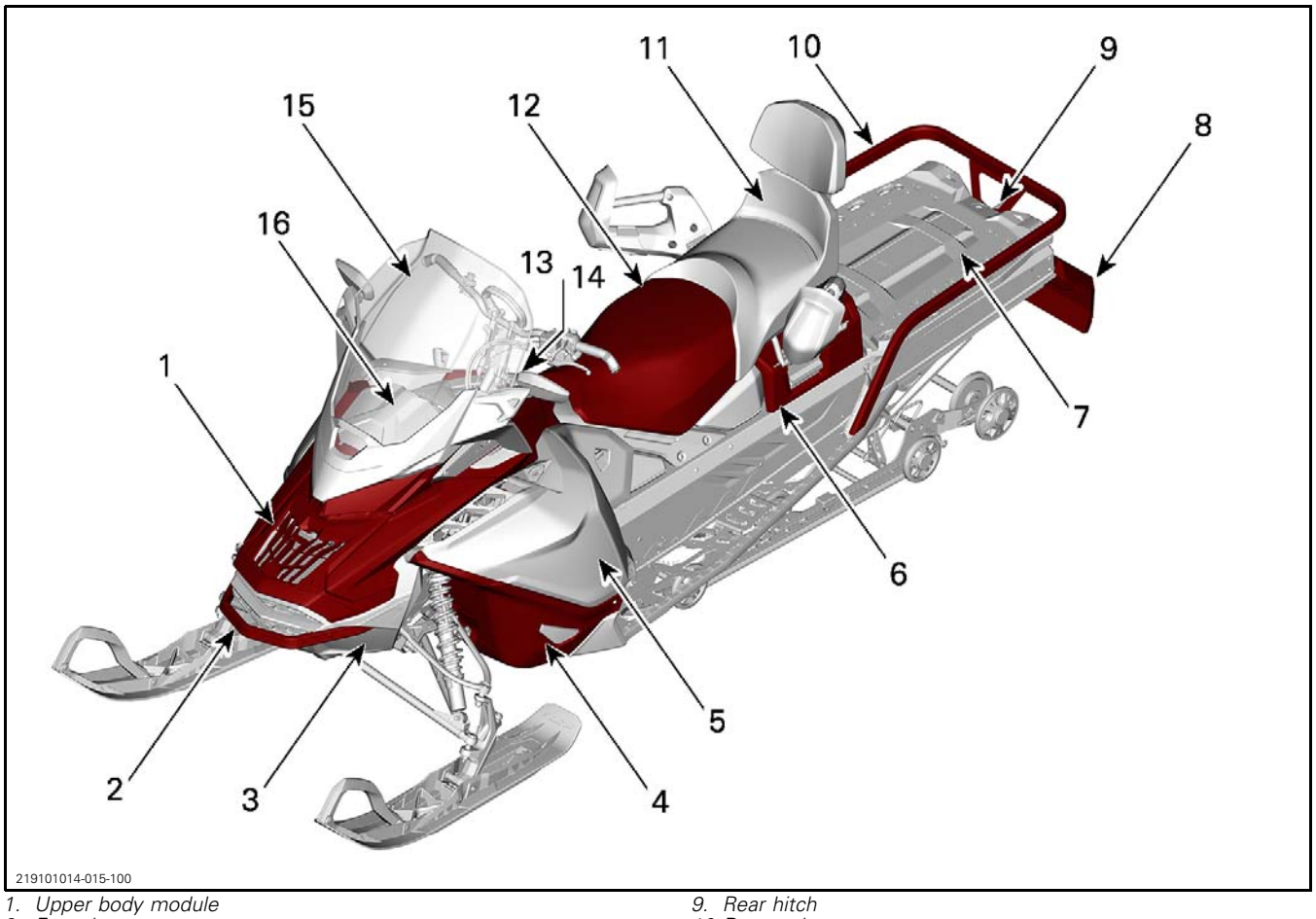


1. *Upper body module*
2. *Front bumper*
3. *Bottom pan*
4. *Side bottom pan*
5. *Side panel*
6. *Storage compartment*
7. *Multi-LinQ plate*
8. *Snow guard*
9. *Rear hitch*
10. *Rear rack*
11. *Passenger seat*
12. *Operator seat*
13. *Console*
14. *Gauge support*
15. *Windshield*
16. *Storage compartment cover*

# GENERAL

## CLEANING

### Cleaning the Seat

It is recommended to clean the seat with a solution of warm soapy water, using a soft clean cloth.

***NOTICE*** **Avoid use of harsh detergents such as strong soaps, degreasing solvents, abrasive cleaners, paint thinners, etc. that may cause damage to the seat cover.**

### Cleaning the Plastic

Clean the vehicle thoroughly, removing all dirt and grease accumulation.

To clean use a soft clean cloth and either soapy water or isopropyl alcohol.

To remove grease, oil or glue use isopropyl alcohol.

***NOTICE*** **Do not apply isopropyl alcohol or acetone directly on decals.**

Follow these recommendations to protect the glossy finish of polypropylene parts.

Apply a non abrasive wax on glossy finish only.

#### Non Compatible Cleaning Products

***NOTICE*** **Polypropylene is not compatible with PETROLEUM BASE PRODUCTS. Contact with petroleum base products, such as cleaners or lubricants will permanently alter the glossy finish of polypropylene parts.**

***NOTICE*** **The following products must not be applied on the plastic components used on the vehicles:**

- Gasoline
- Brake fluid
- Kerosene
- Diesel fuel
- Lighter fluid
- Varsol
- Naphtha
- Acetone
- Strong detergents
- Abrasive cleaners
- Waxes containing an abrasive or a cleaning agent in their formula.

| MATERIAL TYPE | NON-COMPATIBLE CLEANING PRODUCTS |
|---|---|
| Polypropylene | ANY PETROLEUM BASE CLEANING PRODUCTS |
| | XPS ATV FINISHING SPRAY (P/N 219 701 704) |
| | XPS ATV CLEANING KIT (P/N 219 701 713) |




vbs2012-006-002_a

*DO NOT USE ON POLYPROPYLENE*

### Compatible Cleaning Products

| MATERIAL TYPE | COMPATIBLE CLEANING PRODUCT |
|---|---|
| Polypropylene | XPS ATV WASH (P/N 219 701 702) |
| | Soapy water |




vbs2012-006-001

*SAFE FOR POLYPROPYLENE*

## REPAIRING BODY PARTS

The very first step before repairing plastic materials is to find out exactly which type of material is involved.

On the inner surface of each part, the production date, part number, and material code are molded in.

| PLASTIC PARTS | |
|---|---|
| CODE | MATERIAL |
| PP | Polypropylene |
| EMA+PA | Surlyn |

**NOTICE** Some repair products are not compatible with certain plastics.

**⚠ WARNING**

**Polycarbonate windshields must never be repaired by welding or otherwise.**

The following company provides a complete line of products to repair plastic materials:

CREST INDUSTRIES, INC.
Trenton, MI 48183
Phone: 734 479-4141
Toll Free: 1 800 822-4100
Fax: 734 479-4040
E-Mail: info@crestauto.com
www.crestauto.com

# PROCEDURES

NOTE: The same procedure applies for RH and LH side. Most of the time, only one side is described in this subsection.

## DECAL

### Replacing the Decal

1. To remove a decal; heat old decal with a heat gun (low temperature) and peel off slowly.
2. Using isopropyl alcohol, clean the surface and dry thoroughly.

**NOTICE** Do not apply isopropyl alcohol or solvent directly on decals. Use only in a well ventilated area.

3. Just before beginning to affix the new decals, wipe the surface with a clean damp cloth and allow to dry.
4. Use a pallet to affix the decal. Always work from the center towards the edges.

**NOTICE** Do not remove the pre-mask yet.

5. Once the decal is correctly affixed, carefully make a final pass with the pallet. Apply enough pressure to make sure the glue sticks well on the surface.
6. Remove the pre-mask.

## SIDE PANEL

### Removing the Side Panel

1. Release all lock devices.

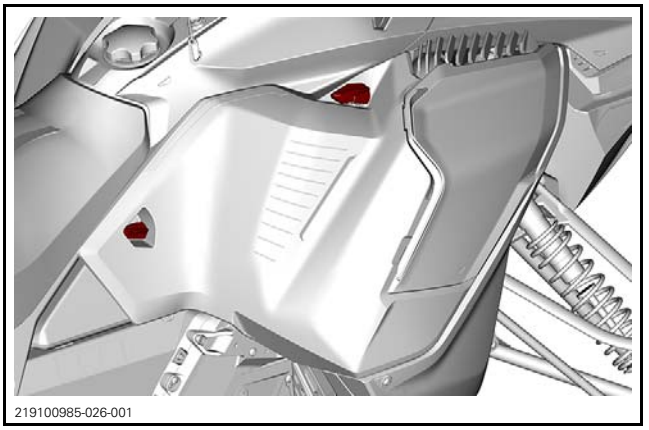


2. Open side panel.
3. Lift the side panel up and towards front.

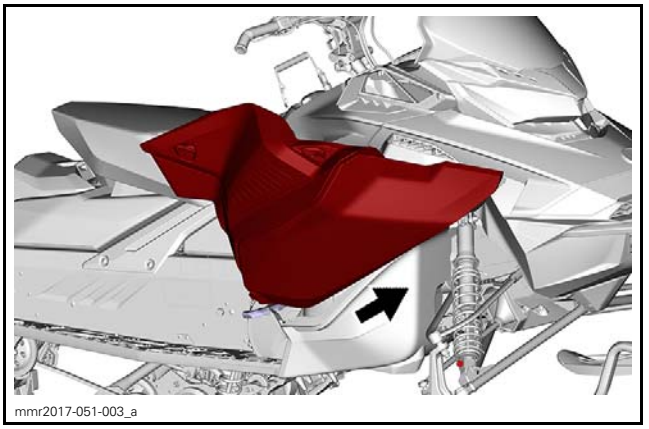


*TYPICAL*

**NOTICE** Make sure to place panels in a safe place to avoid scratching.

### Installing the Side Panel

The installation is the reverse of the removal procedure.

# WINDSHIELD

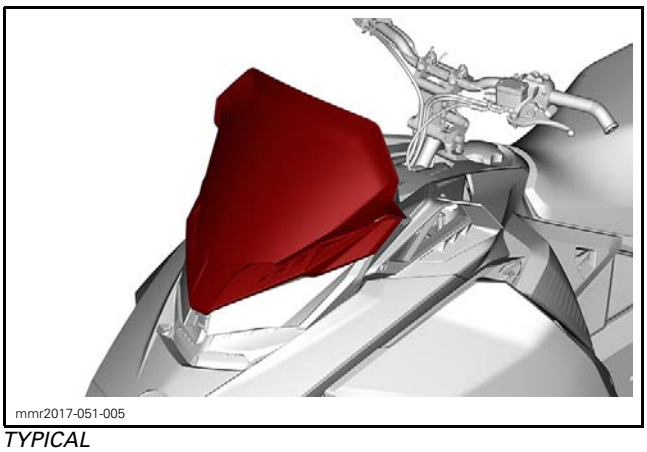


*TYPICAL*

## Removing the Windshield

Place your hands on each side of windshield.

Pull the windshield until its pins come out of rubber grommets then pull in the center to remove center pin from grommet.

## Installing the Windshield

The installation is the reverse of removal procedure.

Lubricate the grommets using soapsuds.

**NOTICE** **Do not lubricate grommets with any type of grease.**

Secure windshield by inserting the windshield pins into the grommets.

NOTE: Make sure not to push grommets through gauge support holes.

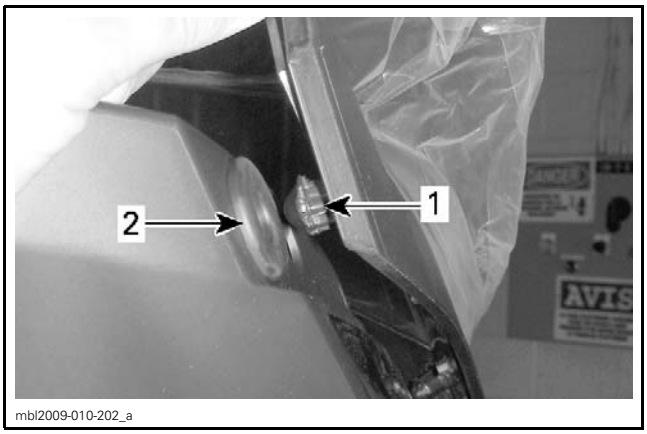


*TYPICAL*
1. *Windshield tab*
2. *Gauge support front grommet*

**⚠ WARNING**

Make sure that handlebar turns freely in both directions. Make sure that there is no contact at any time between handlebar wind deflectors (if so equipped) and windshield.

# STORAGE COMPARTMENT COVER

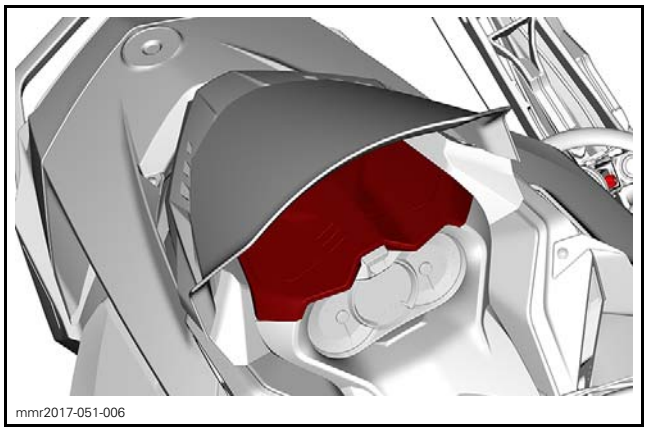


## Removing the Storage Compartment Cover

1. Remove windshield. Refer to procedure in this subsection.
2. Open storage cover until it is almost vertical.

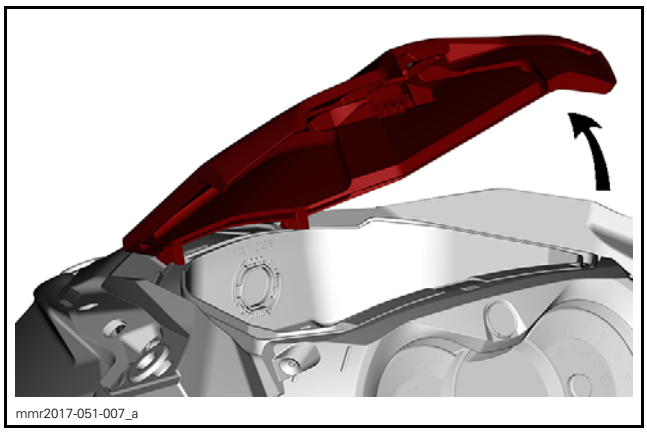


3. Pull out storage cover.

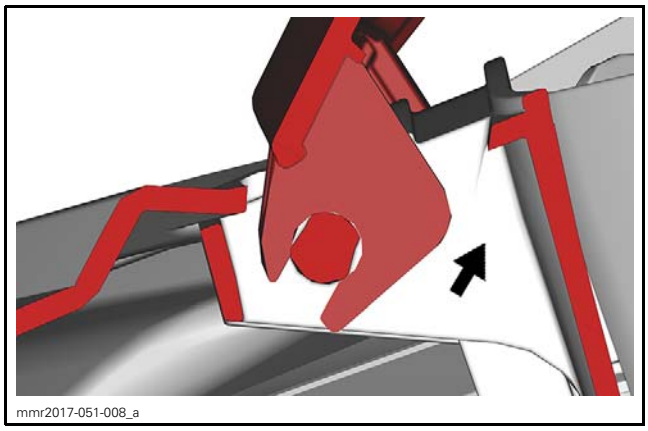
mmr2017-051-008_a

## Installing the Storage Compartment Cover

The installation is the reverse of the removal procedure.

**NOTICE** **Ensure windshield is NOT installed. Otherwise, the storage cover could be damaged during installation.**

# GAUGE SUPPORT

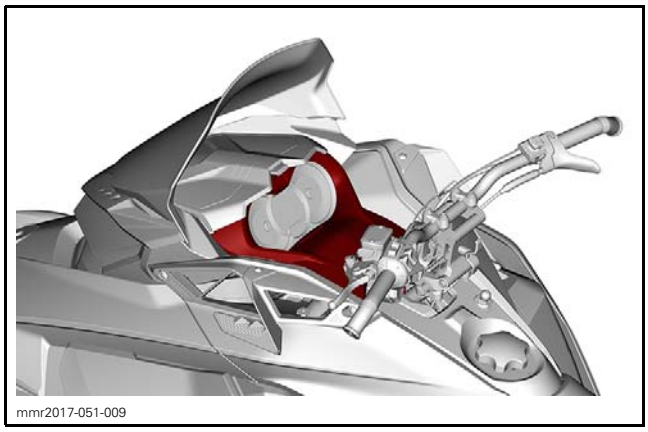
mmr2017-051-009

## Removing the Gauge Support

1. Remove the windshield. Refer to procedure in this subsection.
2. Open the storage compartment cover
3. Remove the gauge support screws.

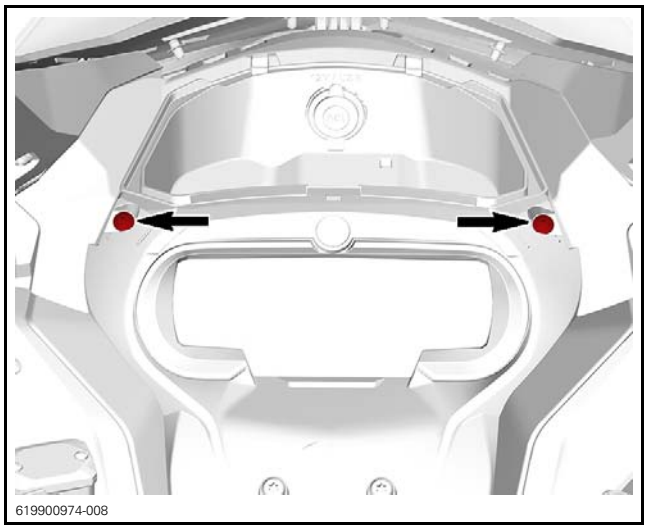
619900974-008

*SE MODEL SHOWN*

4. Lift the front of the gauge support, then slide it forward to remove it.


619900974-009

5. Remove the multifunction gauge from support. Refer to *GAUGE* subsection.

## Installing the Gauge Support

The installation is the reverse of removal procedure.

| TIGHTENING TORQUE | |
|---|---|
| Gauge support screw | 2.3 N•m ± 0.2 N•m (20 lbf•**in** ± 2 lbf•**in**) |

# UPPER BODY MODULE

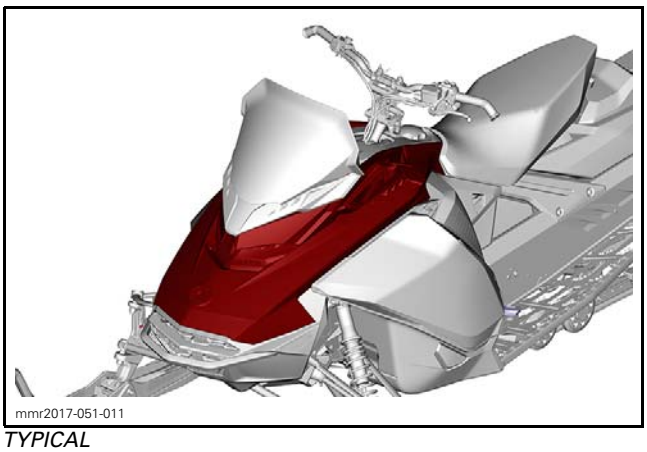
mmr2017-051-011

*TYPICAL*

## Removing the Upper Body Module

1. Refer to procedures in this subsection and remove:
   - Side panels
   - Gauge support
   - Storage compartment and its cover.
2. Disconnect the MAPTS and headlight connectors.

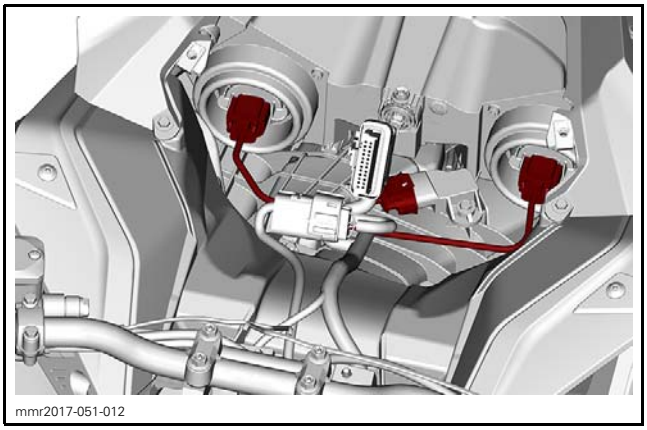
mmr2017-051-012

3. Loosen the air intake hose clamp.

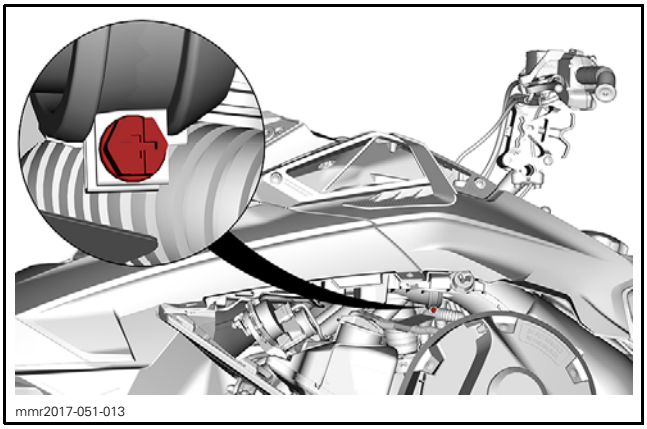
mmr2017-051-013

4. Remove the upper body module retaining screws.

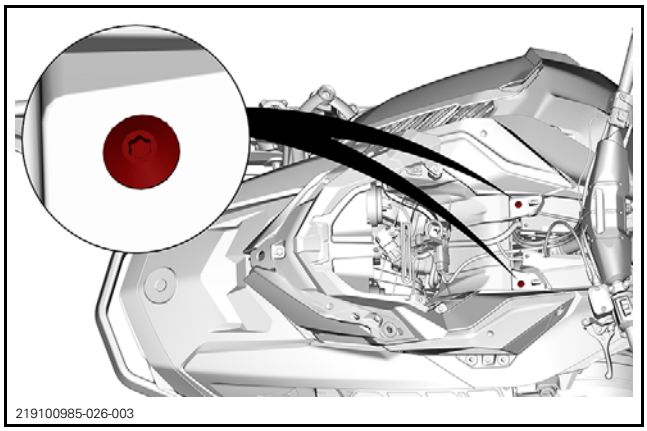
219100985-026-003

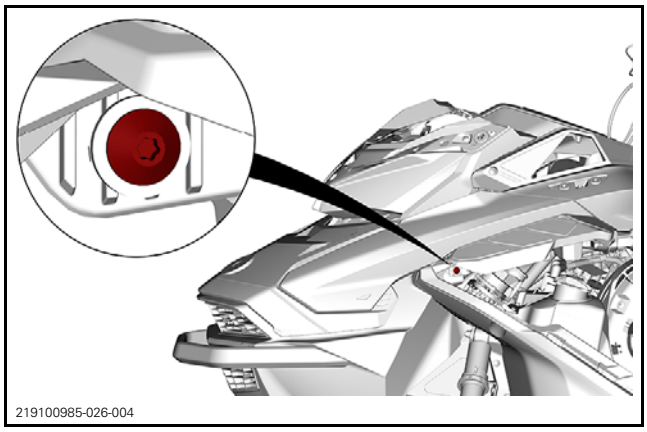
219100985-026-004

5. Lift the rear end of both lateral hood until their tabs come out of the rear console.

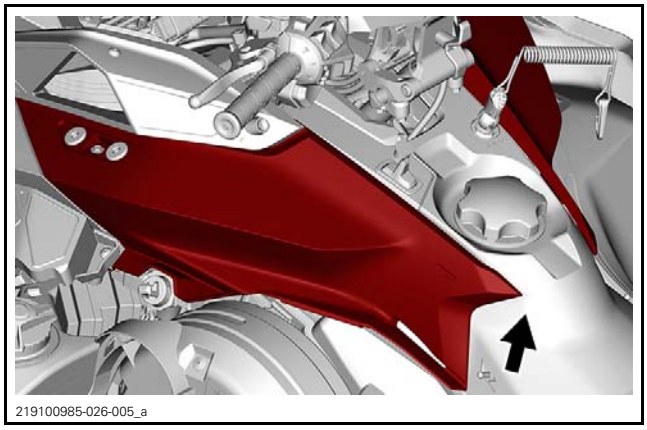
219100985-026-005_a

6. Remove the upper body module.
   - 6.1 Grab the upper body module in the gauge support section.
   - 6.2 Pull the module forward.
   - 6.3 Remove the module from the vehicle.

### Installing the Upper Body Module

The installation is the reverse of the removal procedure. However, pay attention to the following.

Ensure to engage rear hood tabs in rear console.

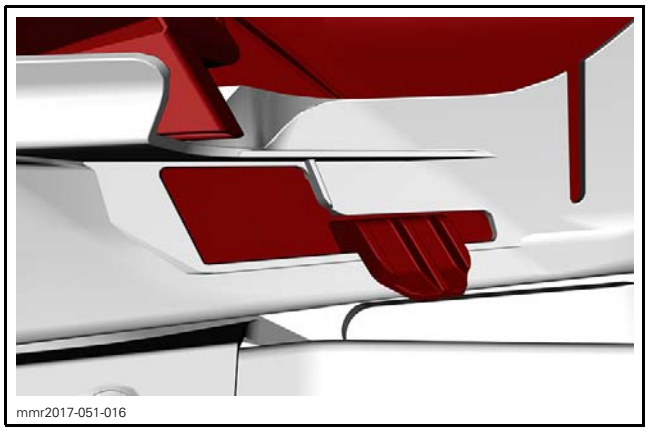
mmr2017-051-016

Ensure to connect the air intake hose.

| TIGHTENING TORQUE | |
|---|---|
| Upper body module screw | 1.8 N•m ± 0.2 N•m (16 lbf•**in** ± 2 lbf•**in**) |

## UPPER BODY MODULE COMPONENTS

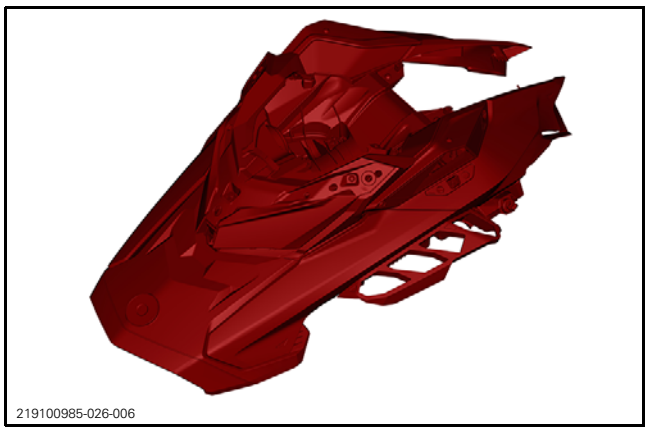
219100985-026-006

### Disassembling the Upper Body Module

1. Remove the upper body module. Refer to procedure in this subsection.
2. Refer to *AIR INTAKE SYSTEM* subsection to disassemble the upper body module.
3. Remove both sides air deflector and air intake filter.

### Assembling the Upper Body Module

The installation is the reverse of removal procedure.

| TIGHTENING TORQUE | |
|---|---|
| Upper body module screw | 1.8 N•m ± 0.2 N•m (16 lbf•**in** ± 2 lbf•**in**) |

## CONSOLE

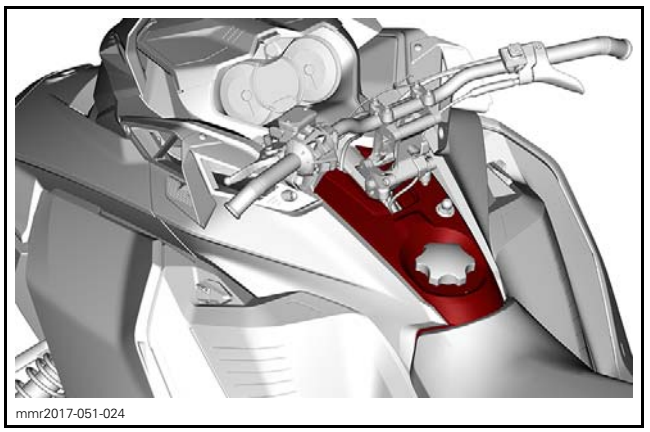
mmr2017-051-024

*TYPICAL*

### Removing the Console

1. Remove *UPPER BODY MODULE*. Refer to procedure in this subsection.
2. Remove the seat. Refer to procedure in this subsection.
3. Cut harness locking ties.
4. Remove console nuts.

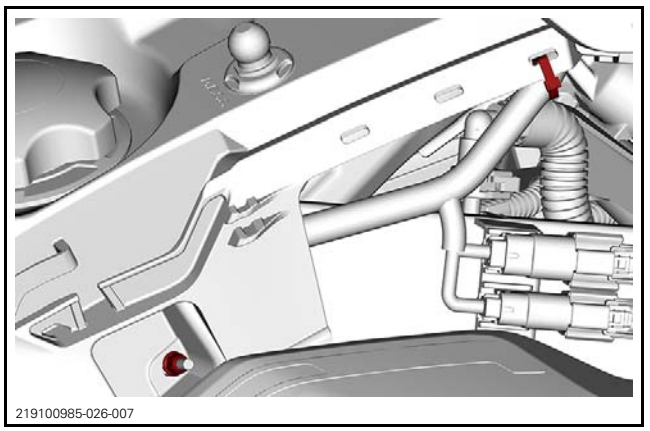
219100985-026-007

5. Remove fuel tank cap.
6. Lift up the console and unplug all connectors.
7. Install fuel tank cap.

## Installing the Console

The installation is the reverse of the removal procedure.

| TIGHTENING TORQUE | |
|---|---|
| Console nut | 2.3 N•m ± 0.2 N•m (20 lbf•**in** ± 2 lbf•**in**) |

# FRONT BUMPER

## Removing the Front Bumper

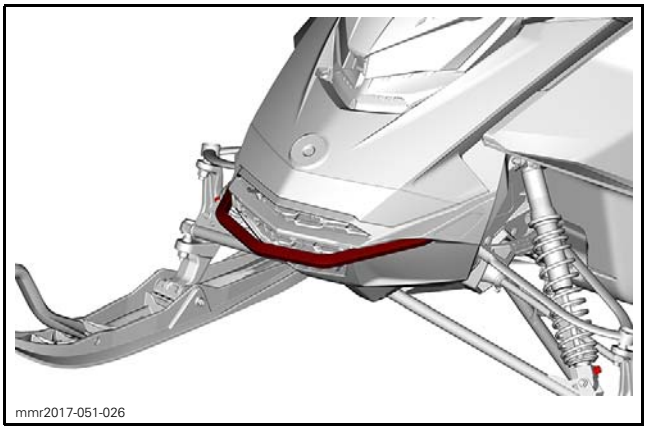


1. Remove tuned pipe. Refer to *EXHAUST SYSTEM* subsection.
2. Drill out rivets from front bumper.

| REQUIRED TOOL |
|---|
| SUPERTANIUM DRILL BIT 3/16" (P/N 529 031 800) |

3. Remove front bumper screws.

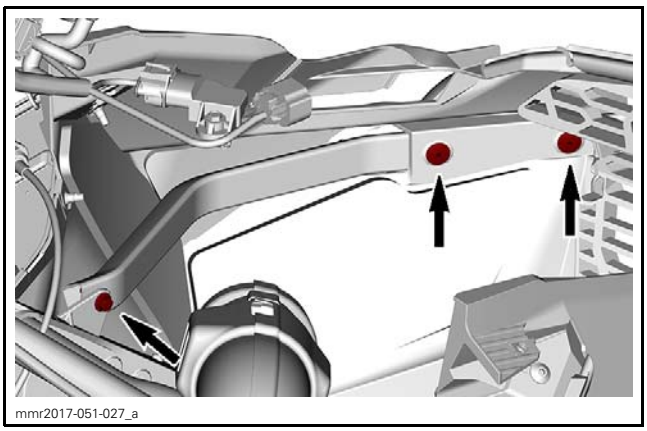


4. Pull out bumper towards front.

## Installing the Front Bumper

The installation is the reverse of the removal procedure. However, pay attention to the following.

Make sure to install front bumper as shown.

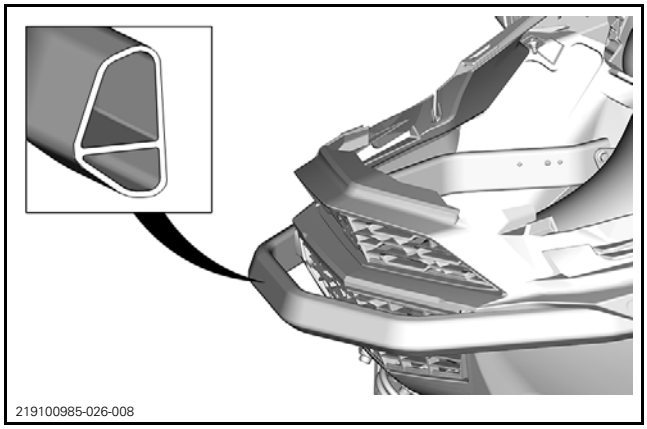


| TIGHTENING TORQUE | |
|---|---|
| Front bumper nut | 5 N•m ± 0.5 N•m (44 lbf•**in** ± 4 lbf•**in**) |

# FRONT BOTTOM PAN

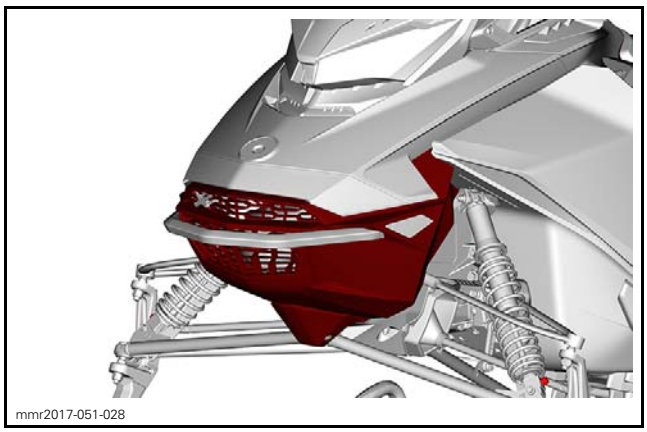


*TYPICAL*

## Removing the Front Bottom Pan

1. Lift front of vehicle until skis are off the ground.
2. Place the front portion of frame on a wooden box to support it securely.

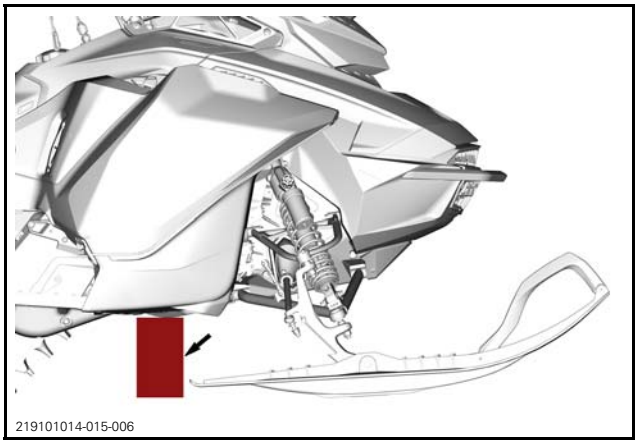

3. Remove *FRONT BUMPER*. Refer to procedure in this subsection.

If the front bottom pan does not need to be replaced, the bumper may remain attached to bottom pan.

4. Remove bottom pan screws.

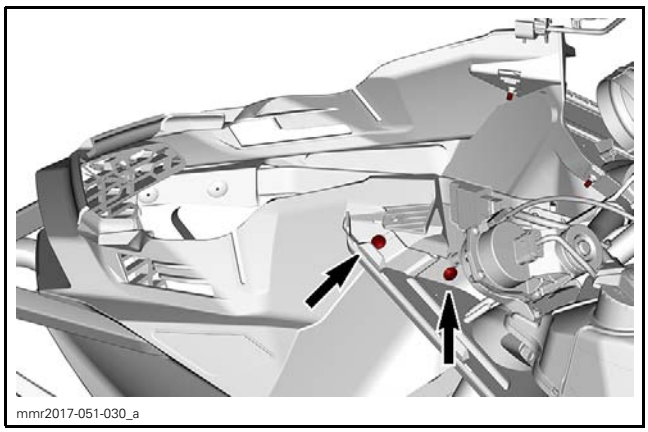


*TYPICAL*

5. Remove front shock absorbers. Refer to *FRONT SUSPENSION* subsection.
6. Drill out all rivets retaining bottom pan.

**NOTE:** Refer to *FRAME* for proper procedure when drilling rivets retaining plastic parts.

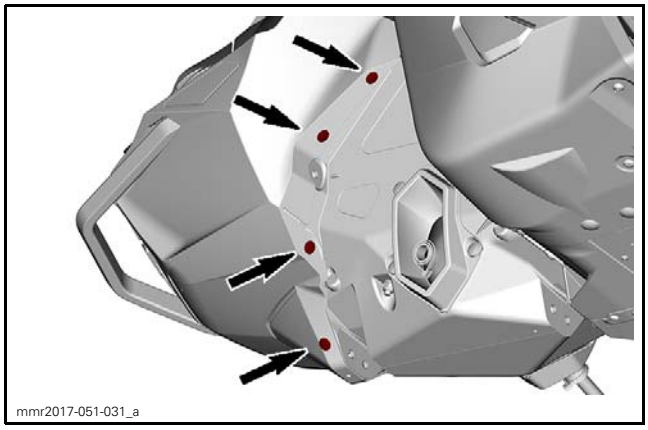


*LH SIDE SHOWN — SOME PARTS REMOVED FOR CLARITY*

7. Remove bottom pan.

## Installing the Front Bottom Pan

The installation is the reverse of the removal procedure.

| TIGHTENING TORQUE | |
|---|---|
| Bottom pan screw | 1.8 N•m ± 0.2 N•m (16 lbf•**in** ± 2 lbf•**in**) |

# SIDE BOTTOM PAN

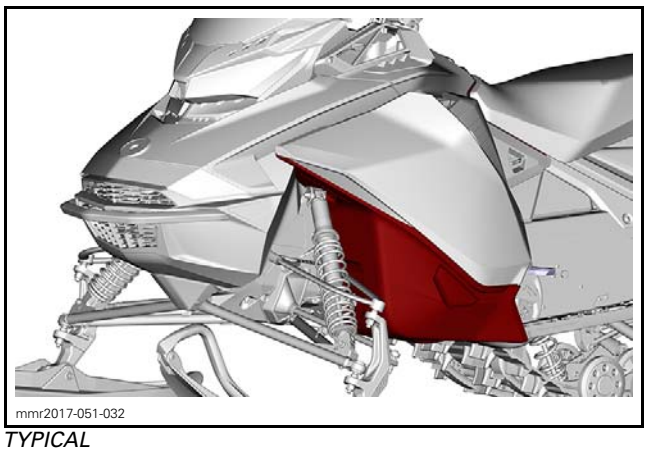


*TYPICAL*

## Removing the Side Bottom Pan

1. Remove the side panel. Refer to procedure in this subsection.
2. Lift front of vehicle until skis are off the ground.
3. Place the front portion of frame on a wooden box to support it securely.

**NOTE:** Ensure to clear side bottom pans so they can move freely.

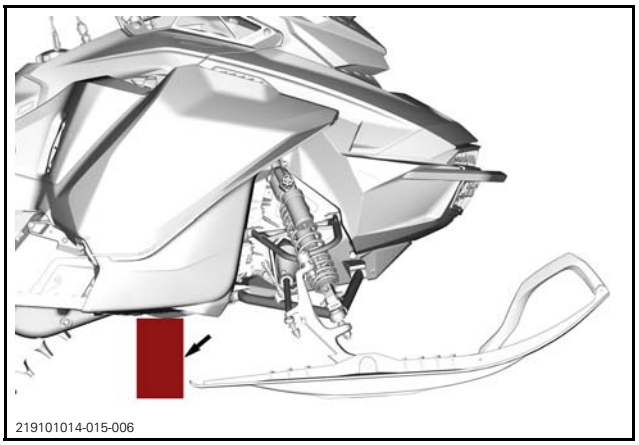


4. Disconnect vent tube from side bottom pan, and remove the screws.

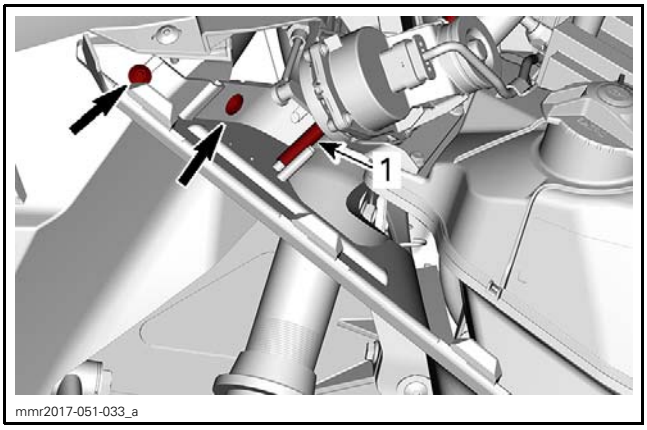


*1. Vent tube*

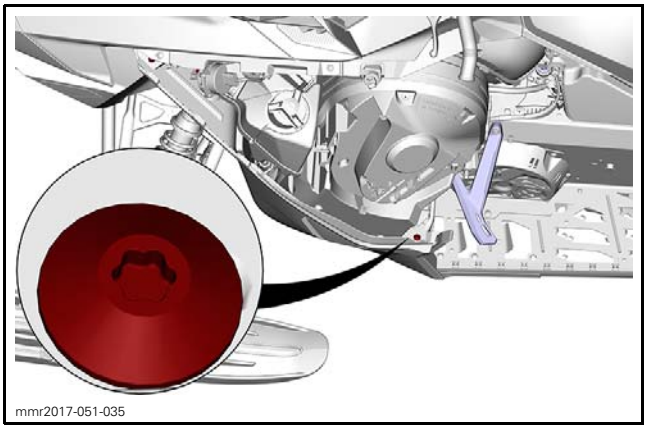


*TYPICAL*

5. To remove the LH side bottom pan, remove the screws and washers.

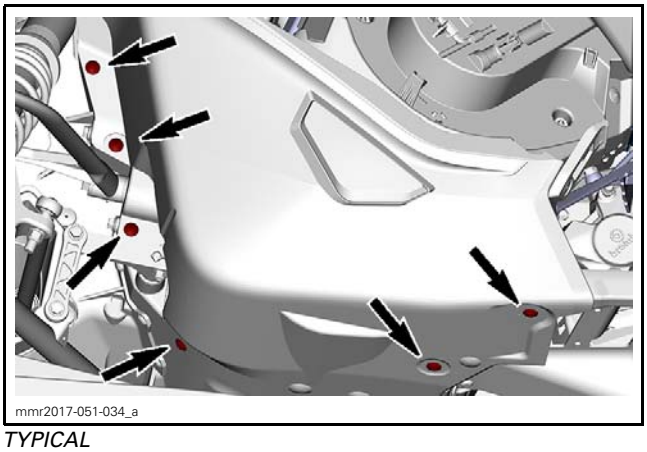


*TYPICAL*

6. To remove the RH side bottom pan, drill out all rivets

NOTE: Refer to *FRAME* for proper procedure when drilling rivets retaining plastic parts.

**NOTICE** **Be careful not to drill through muffler.**

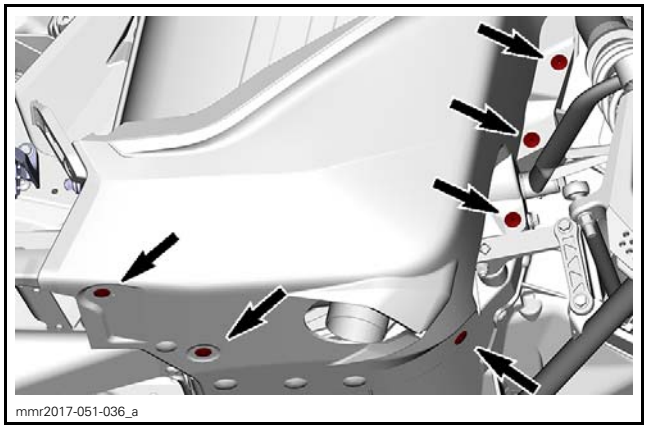


*TYPICAL - RH SIDE SHOWN*

## Installing the Side Bottom Pan

The installation is the reverse of the removal procedure. However, pay attention to the following.

Make sure to install side bottom hull flip into the frame slot.

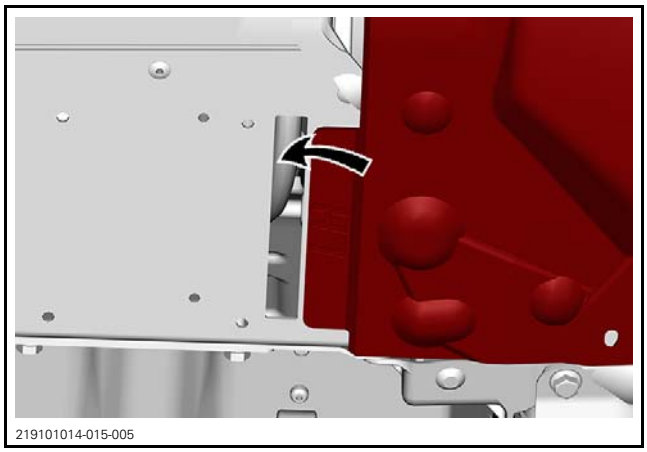


*BOTTOM VIEW*

Reinstall the washers at the correct position.

| TIGHTENING TORQUE | |
|---|---|
| Side bottom pan screw on pinched nut | 2.8 N•m ± 0.2 N•m (25 lbf•**in** ± 2 lbf•**in**) |
| Side bottom pan screw on panel nut | 1.8 N•m ± 0.2 N•m (16 lbf•**in** ± 2 lbf•**in**) |

# OPERATOR SEAT

## Removing and Installing the Operator Seat

1. Remove passenger seat if equipped. Refer to procedure in this subsection.
2. While pushing in the center of the seat towards front, pull on both sides, to unlock, and slide rearwards.

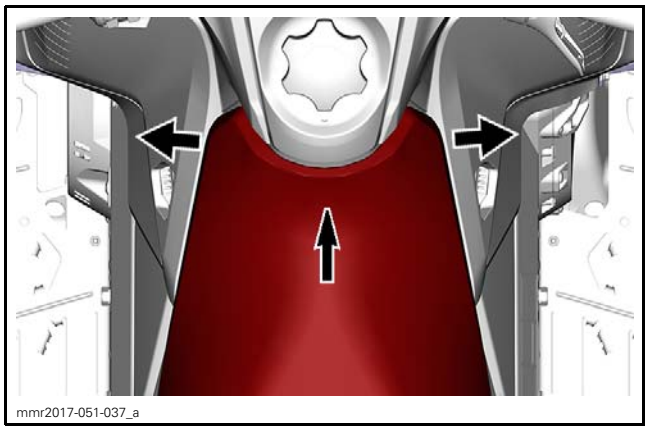


The installation is the reverse of the removal procedure.

Ensure the seat is locked.

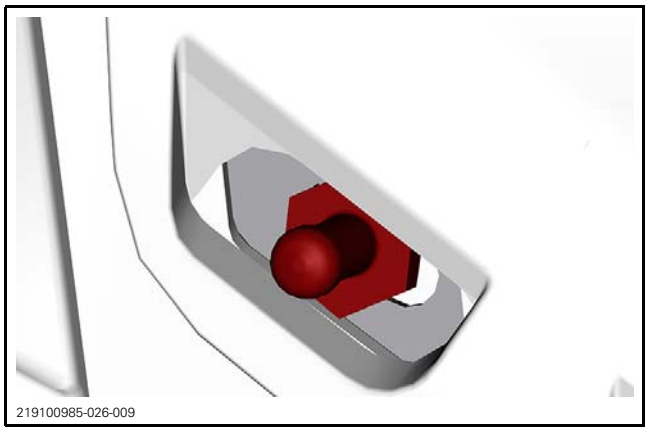


*FOAM REMOVED FOR CLARITY*

## Replacing the Seat Cover

Remove seat.

Remove the old seat cover. Check the foam and replace it if necessary.

Install the new seat cover with staples.

**NOTICE** **Ensure to use the proper length staples. Extra long staples would pierce the exposed side of the leatherette.**

NOTE: For an easier installation, it is highly recommended to use an electric stapler.

Ensure that the seat rest firmly against a hard surface such as a piece of wood. This is done to get the staples completely pushed in place.

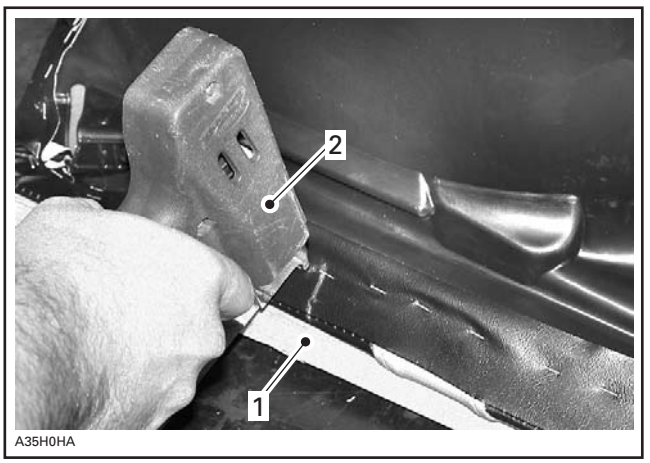


*TYPICAL*
1. *Piece of wood*
2. *Tacker*

The seat needs a special stapling procedure to ensure a strong and durable seat cover installation. Make sure the staples on the rear part of the seat are installed as shown.

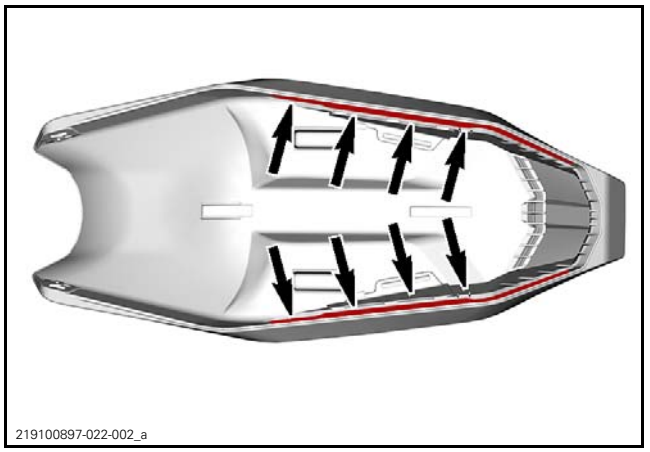


The staples go inside the crease on each side of the seat.

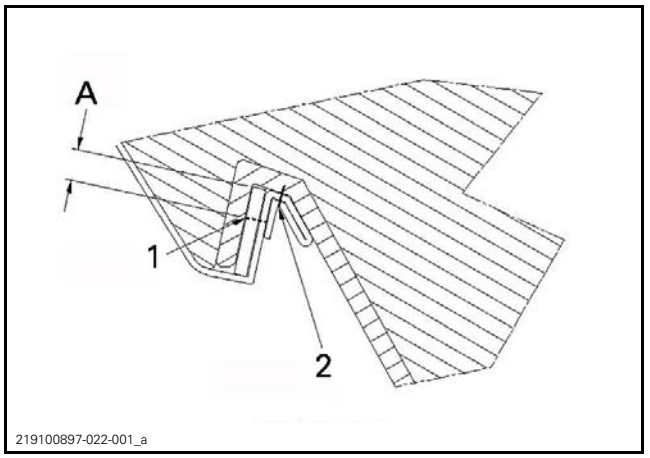


*A = 5 MM (1/4 IN)*
1. *Sewing*
2. *Staple*

After seat cover installation, cut out excess material leaving 5 mm (1/4 in) between staple and edge.

# PASSENGER SEAT (ON APPLICABLE MODELS)

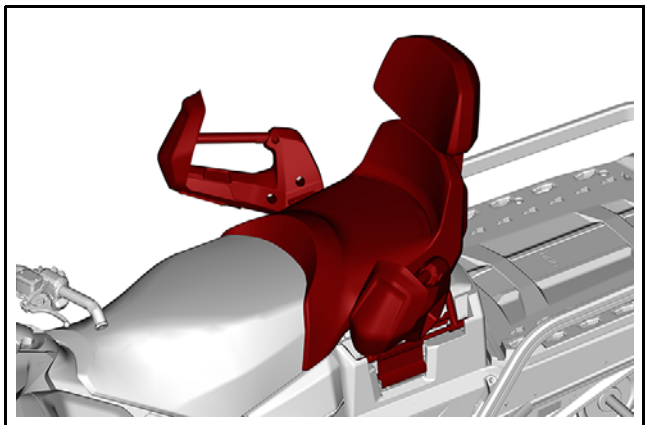

520002132-010

**⚠ WARNING**

**Any passenger must be able to firmly lay is feet on the footrests and keep his hands on the handholds at all times when seated. Respecting those physical criteria is important to ensures that the passenger is stable and to reduce the risks of ejection.**

## Removing the Passenger Seat

1. Unlock seat latch on both sides.

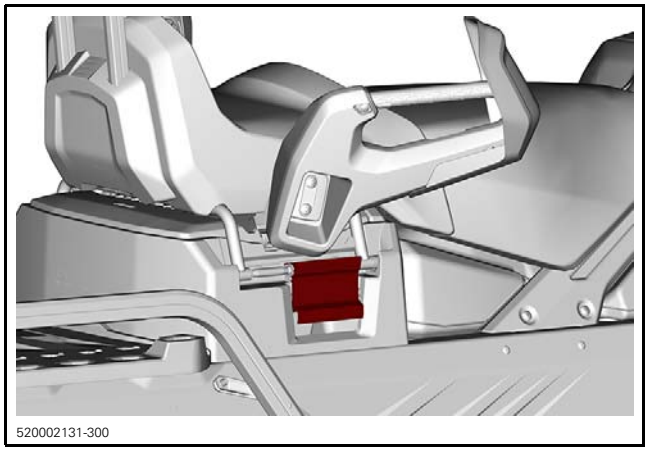

520002131-300

2. Lift the seat to disconnect the electrical connector.
3. Remove passenger seat.

## Installing the Passenger Seat

The installation is the reverse of removal procedure. However, pay attention to the following.

Ensure to reach the second step when latching.

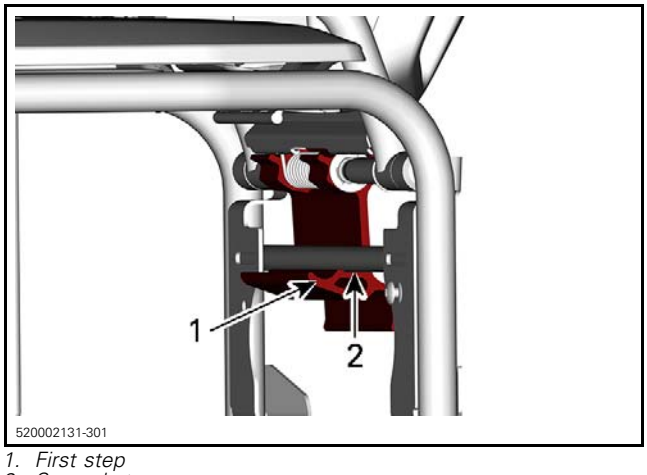


520002131-301

*1. First step*
*2. Second step*

**⚠ CAUTION** **Ensure the latch is on the second step before riding.**

# STORAGE COMPARTMENT

## Removing the Storage Compartment

1. Remove passenger seat and backrest. Refer to this subsection.
2. Open storage compartment, remove battery cover and all mounting screws.

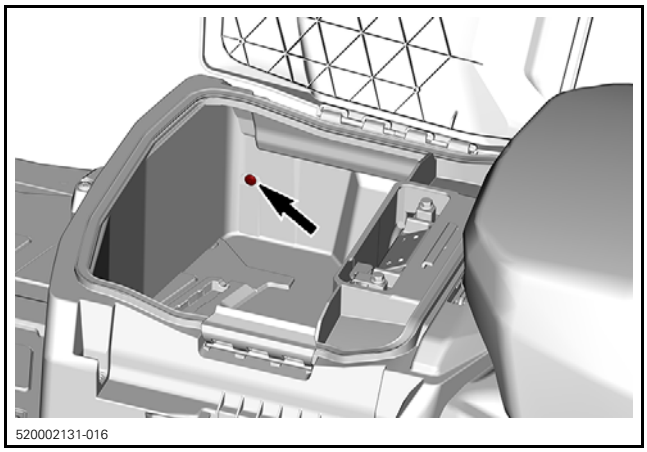

520002131-016

*LH SIDE SCREW SHOWN*

3. Remove storage compartment.

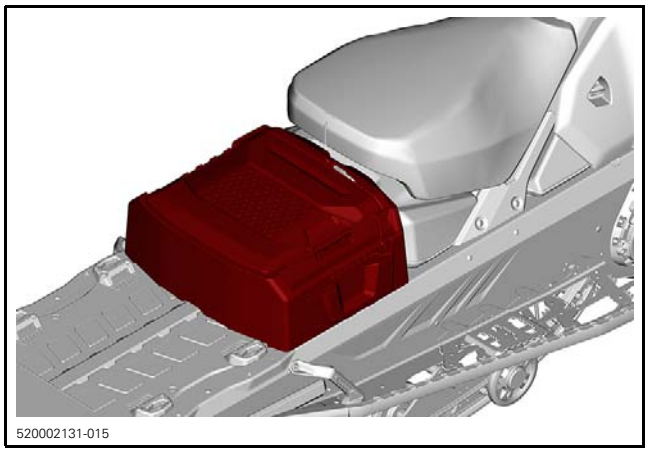


### Installing the Storage Compartment

The installation is the reverse of removal procedure.

## REAR HITCH

### Removing the Rear Hitch

Remove following fasteners.

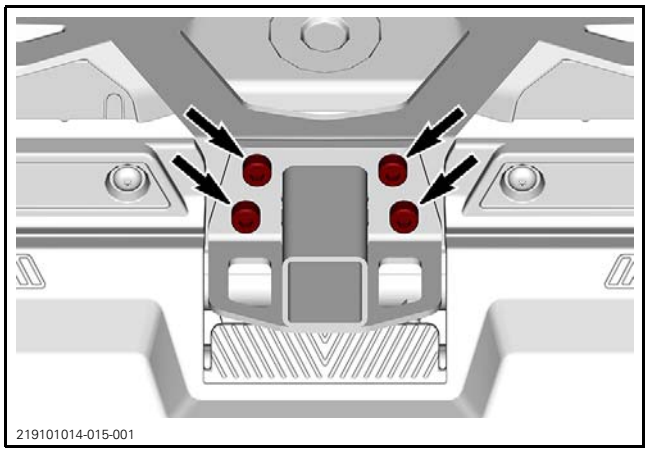


### Installing the Rear Hitch

The installation is the reverse of removal procedure. However, pay attention to the following.

| TIGHTENING TORQUE | |
|---|---|
| Rear hitch nuts | 31.5 N•m ± 3.5 N•m (23 lbf•ft ± 3 lbf•ft) |

## REAR RACK

### Removing the Rear Rack

Remove rear hitch. Refer to procedure in this subsection.

Remove following fasteners on both side.

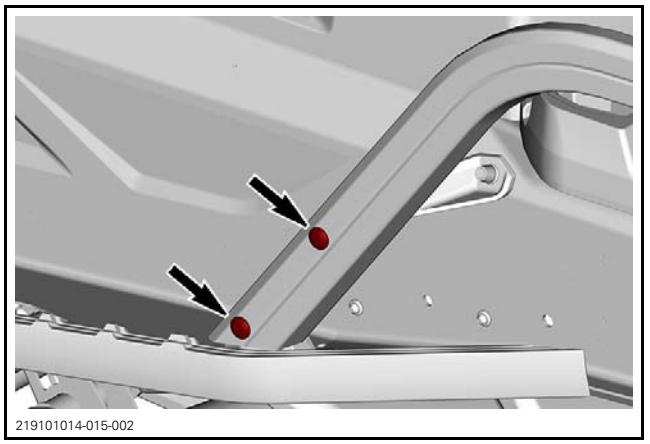


### Installing the Rear Rack

The installation is the reverse of removal procedure.

## REAR BUMPER (IF EQUIPPED)

| TIGHTENING TORQUE | |
|---|---|
| Rear bumper screws | 16 N•m ± 2 N•m (142 lbf•**in** ± 18 lbf•**in**) |

## MULTI-LINQ PLATE

### Removing the Multi-LinQ Plate

Remove storage compartment under passenger seat. Refer to this subsection.

Remove following fasteners.

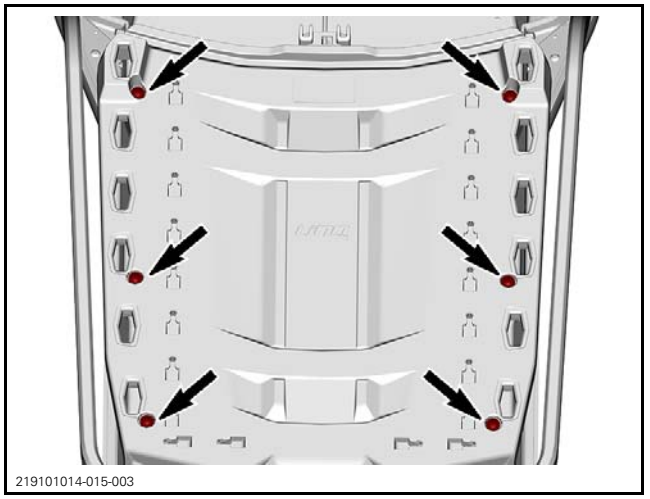


Slightly lift the rear portion of the multi-LinQ plate to disconnect the taillight connectors.

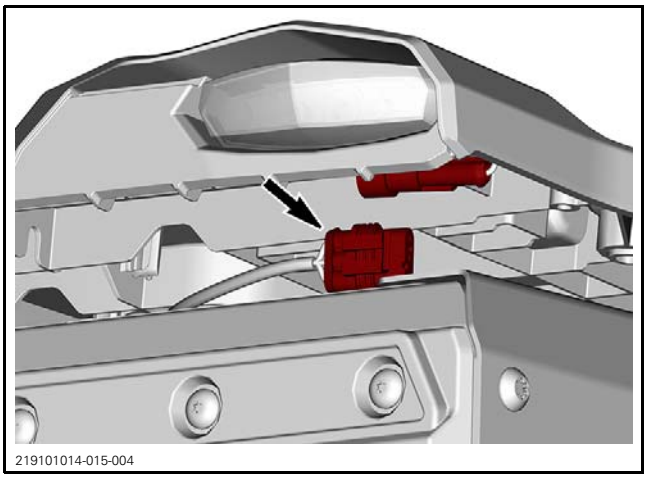
219101014-015-004

## Installing the Multi-LinQ Plate

The installation is the reverse of removal procedure. However, pay attention to the following.

Make sure to avoid pinching the wiring harness when installing the multi-LinQ plate in its place.

| TIGHTENING TORQUE | |
|---|---|
| Multi-LinQ plate screws | 7 N•m ± 1 N•m (62 lbf•**in** ± 9 lbf•**in**) |

# FRAME (EFI AND E-TEC)

## SERVICE TOOLS

| Description | Part Number | Page |
|---|---|---|
| RADIATOR INSTALLATION GAUGES | 529 036 422 | 628 |
| SUPERTANIUM DRILL BIT 3/16" | 529 031 800 | 619 |

## SUSPENSION MODULE

Midwest Manuals
Green Manuals
Paperless Manuals
For a Better Tomorrow
www.green-manuals.com
If you bought this manual from any other seller please leave them
NEGATIVE feedback and notify us at bestshopmanuals@gmail.com

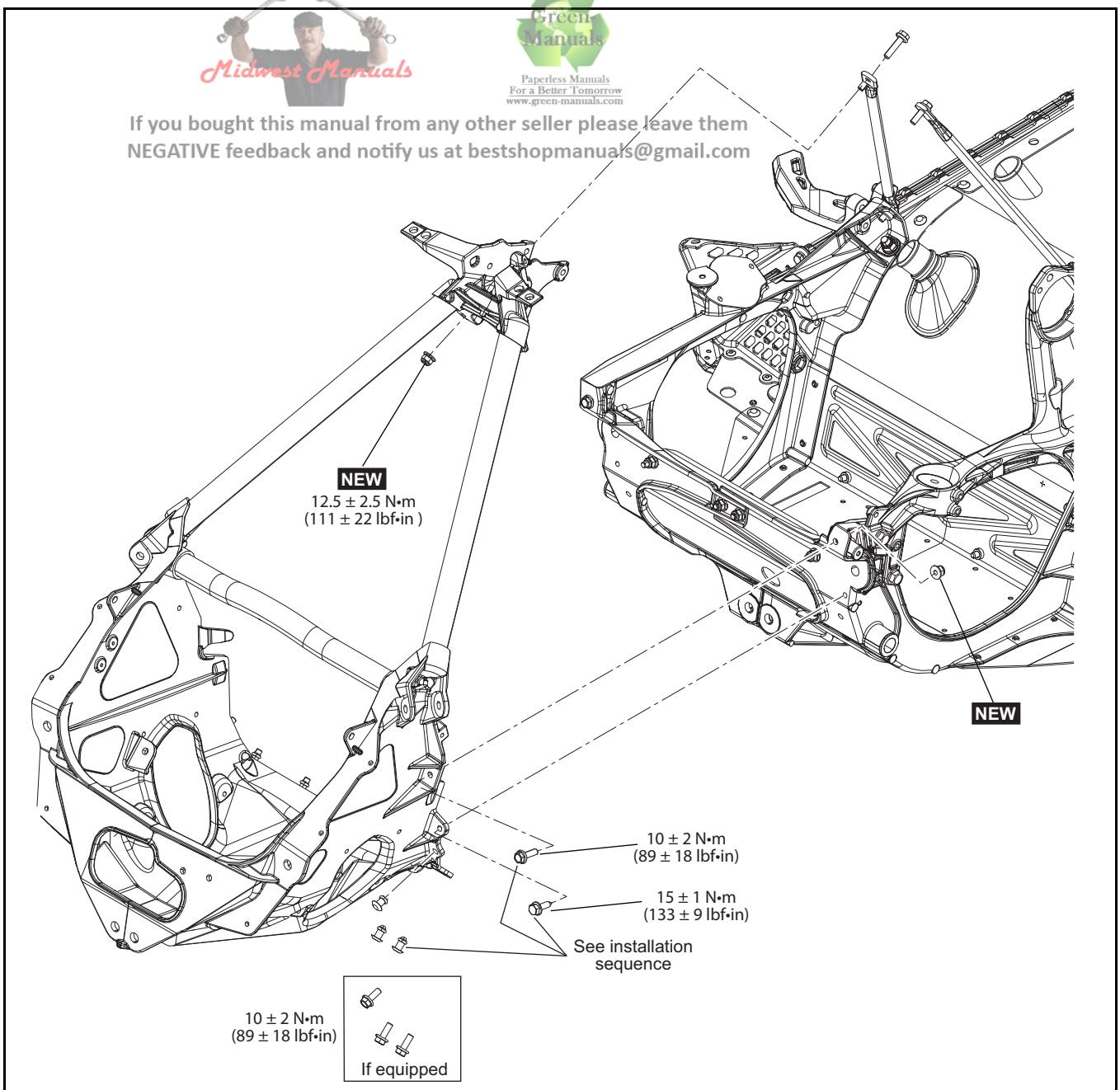


**NEW** = Component must be replaced when removed.

219100897-023-100_a

# ENGINE MODULE

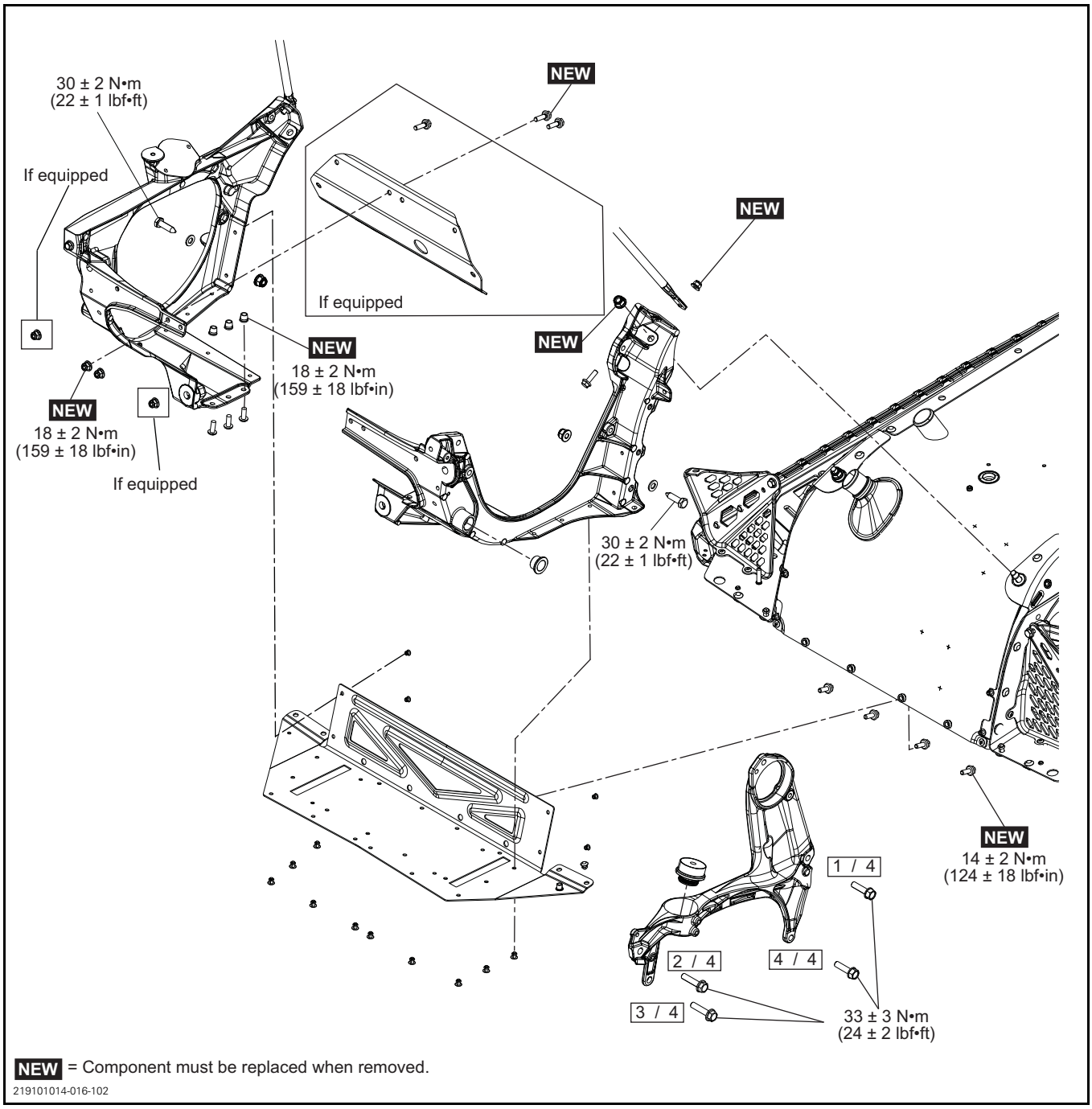


**NEW** = Component must be replaced when removed.

219101014-016-102

# TUNNEL MODULE

*16in Track*

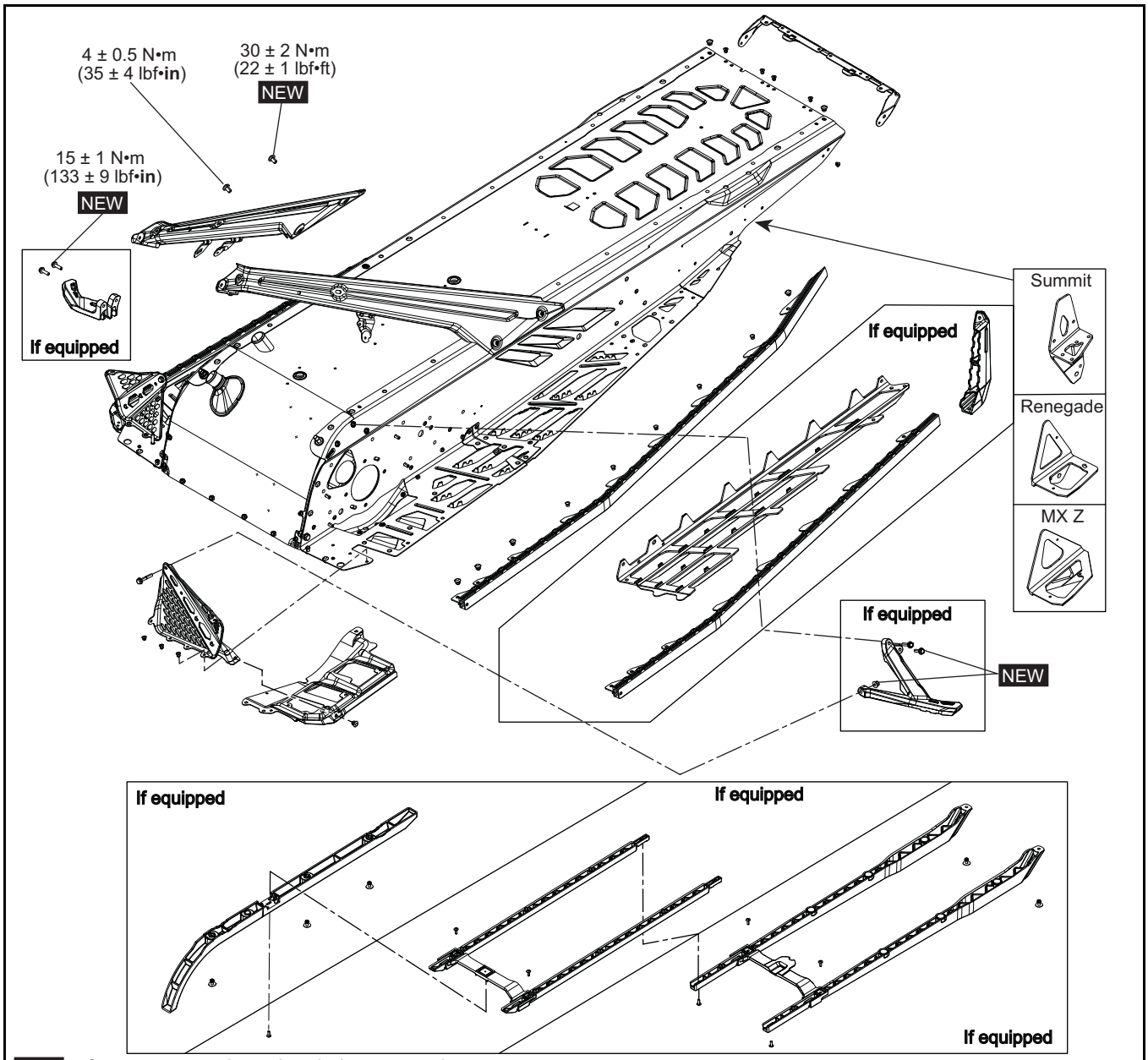


NEW = Component must be replaced when removed.

219101014-016-103

*20in Track*

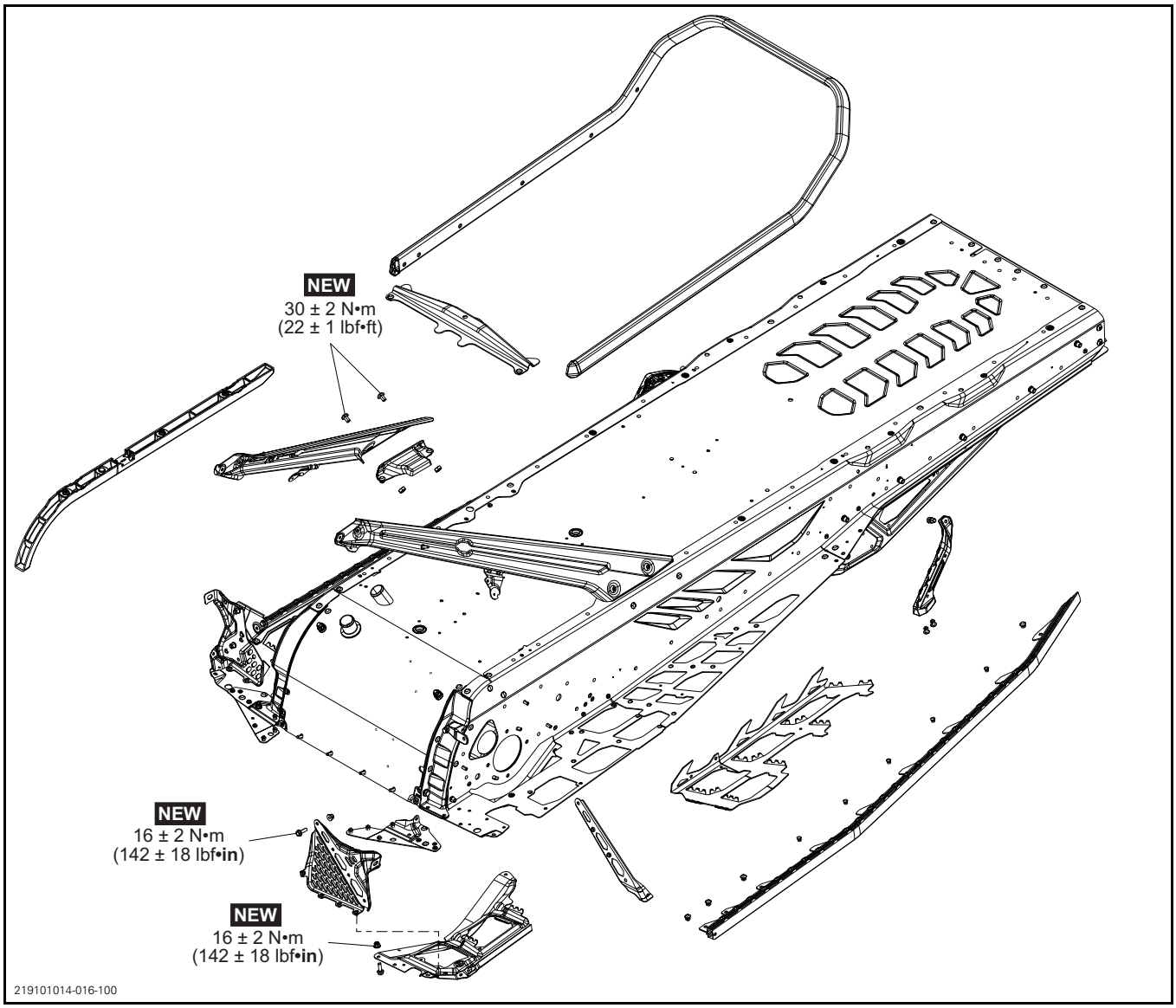
NEW
30 ± 2 N•m
(22 ± 1 lbf•ft)
NEW
16 ± 2 N•m
(142 ± 18 lbf•in)
NEW
16 ± 2 N•m
(142 ± 18 lbf•in)
219101014-016-100

# GENERAL

During assembly/installation, use the torque values and the service products as in the exploded views.

Clean threads before applying a threadlocker. Refer to *SELF-LOCKING FASTENERS* and *LOCTITE APPLICATION* at the beginning of this manual for complete procedure.

**⚠ WARNING**

**Torque wrench tightening specifications must be strictly adhered to.**
**Locking devices (e.g.: locking tabs, elastic stop nuts, cotter pins, etc.) must be replaced with new ones.**

Check for loose, bent, worn out, rusted or otherwise damaged components. Replace the faulty components.

# PROCEDURES

## RIVETS

For proper drilling instructions and to prevent premature wear, follow the procedures as detailed.

***NOTICE*** **When removing rivets, do not enlarge or deform the rivet holes in the frame.**

### Removing a Self-Percing Rivet

Henrob and Thomson rivets are self-piercing rivets. They are installed with specific robotized equipment.

1. Using a grinding disk, grind the rivet end.

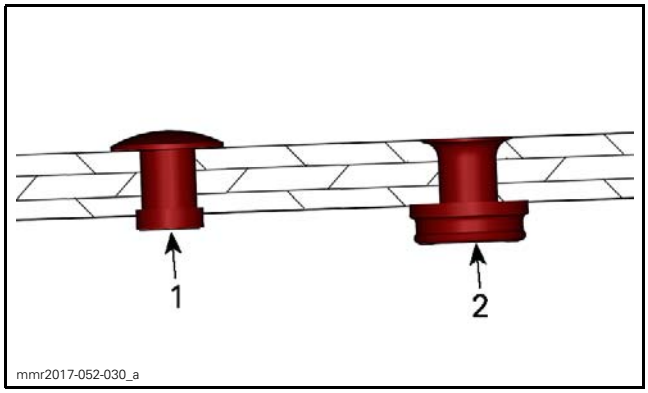


*1. Thomson rivet*
*2. Henrob rivet*

2. Support the frame around the rivet head with a socket on the opposite side to avoid warpage.

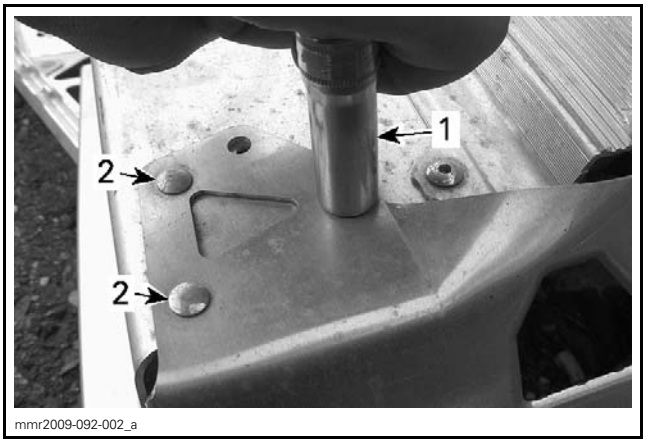


*TYPICAL*
*1. 11 mm socket over a rivet head*
*2. Rivet heads*

3. Drive out remaining rivet using a punch.

### Removing a Pop Rivet

Stavex, Avibulb, and Hemlock rivets are standard pop rivets. They are installed with standard manual or pneumatic tool.

1. Drill rivet head sufficiently to cut through it.

NOTE: To drill a Hemlock rivet, remove the riveting nail using a punch first.

***NOTICE*** **It is highly recommended to support the frame locally around a Hemlock rivet when punching its nail out.**




*HEMLOCK RIVET*

| RECOMMENDED TOOL |
| --- |
| SUPERTANIUM DRILL BIT 3/16" (P/N 529 031 800) |

***NOTICE*** **Drill only sufficiently to cut rivet head. Do not drill into frame material, or part secured using the rivet. When rivet is used to secure a plastic part, use pliers to avoid rotation of rivet with drill bit and heating or melting of the plastic part.**

2. Using a small punch, drive out the remaining rivet end.

### Removing a HUCK Rivet

Huck rivet is a 2 parts type rivet. It is installed with a specific pneumatic tool.

1. Using a cut-off tool, cut the rivet retainer without touching the retainer's shoulder.

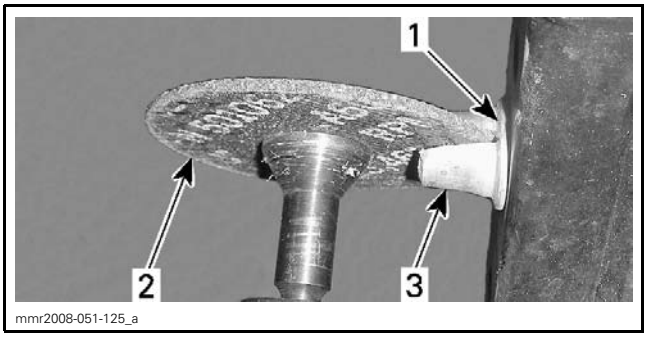


*1. Rivet retainer's shoulder*
*2. Cutter wheel*
*3. Rivet retainer*

NOTE: Apply a thin layer of grease on cutter wheel to increase its durability.

2. Break the rivet retainer's shoulder using a chisel.
3. Use a small punch to drive out the rivet stem.

## FRAME

### Cleaning the Frame

Clean frame and tunnel with appropriate cleaners and rinse with high pressure hose.

NOTE: For bare aluminum frames use only aluminum cleaner and follow instructions on container.

***NOTICE*** **Never direct high-pressure water jet towards decals. They will peel off.**

### Welding the Frame

No welding is permitted unless it is specified on a BRP bulletin.

### Repairing the Frame

NOTE: The following is specific information for aluminum chassis painting. Use common painting techniques.

1. Sand the area to be painted.
2. Clean and dry the area.
3. Apply a thin layer of paint of the appropriate color.
4. Allow paint to dry before re-coating.

NOTE: Paint takes approximately 15 minutes to dry following application.

5. Apply a thin coat of clear.

NOTE: Immediately after the clear coat application, apply a thin coat of HR50 blending solvent **around** the painted area.

6. Allow clear coat to dry.

NOTE: Clear coat takes approximately 2 hours to dry following application.

## REAR BUMPER

Refer to *BODY* subsection for rear bumper removal and installation procedure.

## REAR FRAME MEMBER

### Removing the Rear Frame Member

1. Refer to *BODY* subsection to remove the following:
   – Seat
   – Upper body module
   – Rear console.
2. Remove fasteners as per the following illustrations.

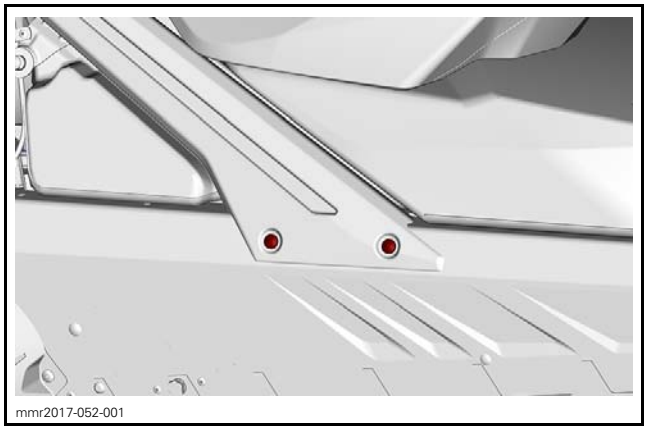


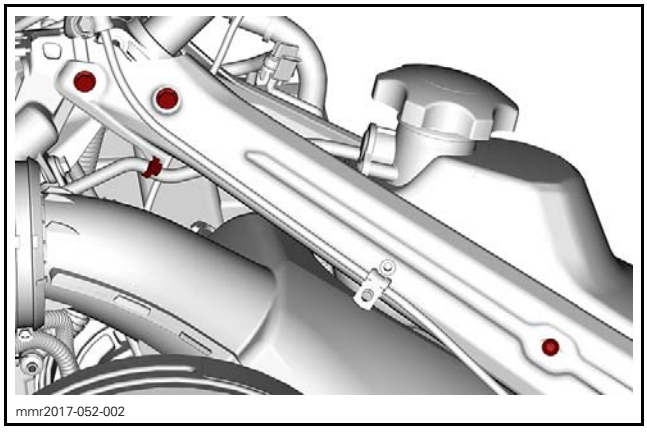

3. Remove rear frame member.

### Installing the Rear Frame Member

The installation is the reverse of the removal procedure. However, pay attention to the following.

NOTE: Install all screws and nuts before tightening them.

Refer to exploded view for proper tightening torque.

## FRONT SUSPENSION MODULE

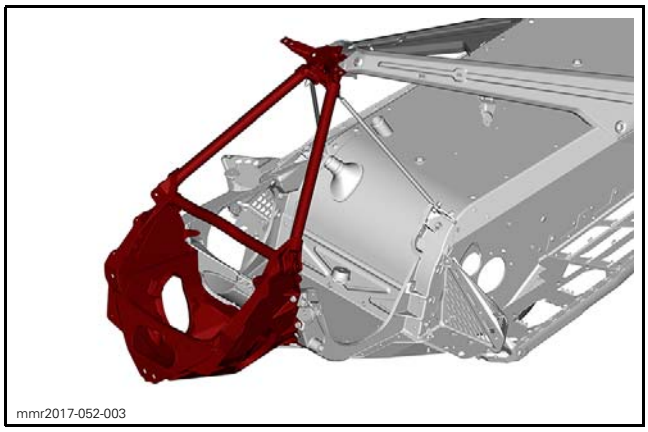
mmr2017-052-003

### Removing the Front Suspension Module

1. Lift front of vehicle until skis are off the ground.
2. Place a wooden box under the engine module to support the frame securely.
3. Refer to the appropriate subsection and remove:
   – Engine
   – Steering column.
4. Detach the brake hose clamp next of the upper steering column support.
5. Detach side frame members from upper steering column support.

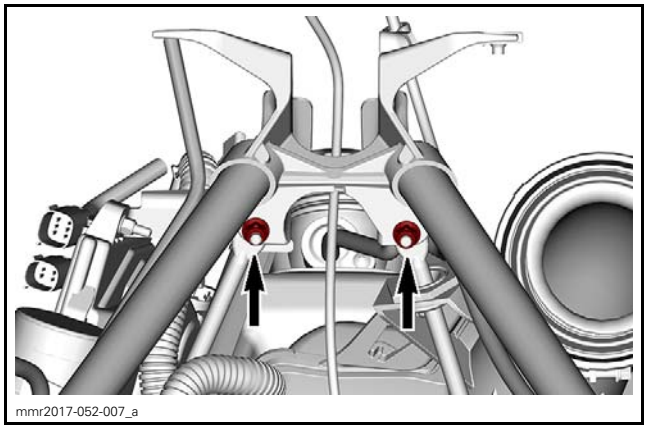
mmr2017-052-007_a

6. Remove the front suspension assembly in the following manner:
   6.1 Detach tie-rod ends from steering column.
   6.2 Remove upper shock absorber screws.
   6.3 Remove screw that secures stabilizer link to lower arm.

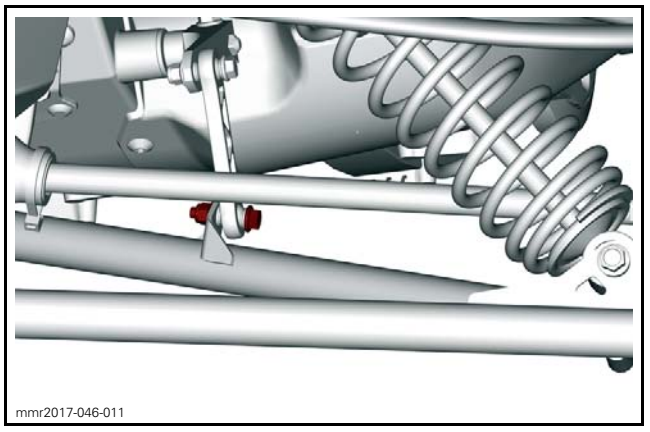
mmr2017-046-011

   6.4 Remove upper and lower suspension arms screws and nuts. Refer to *FRONT SUSPENSION* subsection.
   6.5 Remove front suspension assembly from vehicle.
7. Remove the stabilizer bar. Refer to *FRONT SUSPENSION* subsection.
8. Remove the front bottom pan. Refer to *BODY* subsection.

NOTE: Keep the front bumper installed on front bottom pan.

9. Cut locking ties that secure vents and electrical harness to module tubes.

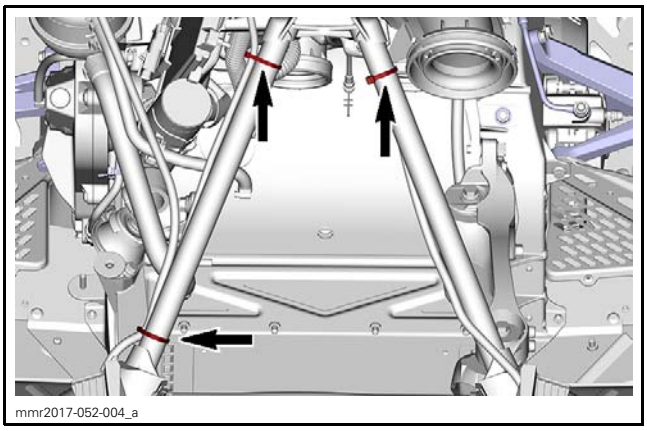
mmr2017-052-004_a

10. If the suspension module needs to be replaced, remove:
    – Steering rack / lower steering column support
    – Tie rod boots.
    Refer to *STEERING SYSTEM* subsection.
11. Remove the lower retaining fasteners.

For riveted models, refer to *REMOVING A POP RIVET* at the beginning of this subsection for procedure.

**NOTICE** **It is highly recommended to support the frame locally around a Hemlock rivet when punching its nail out.**

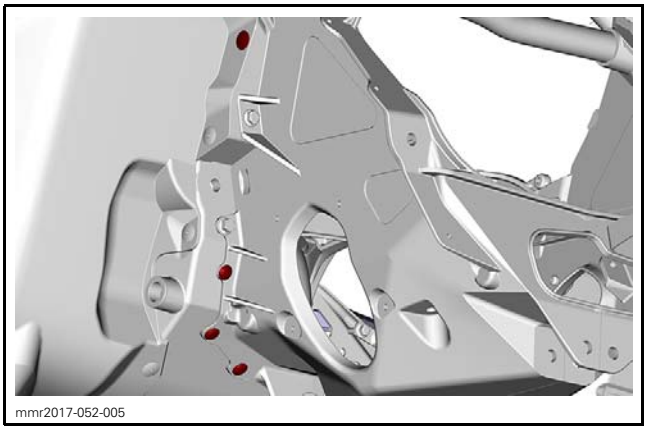
mmr2017-052-005
*RH SIDE SHOWN*

12. Remove the upper retaining fasteners.

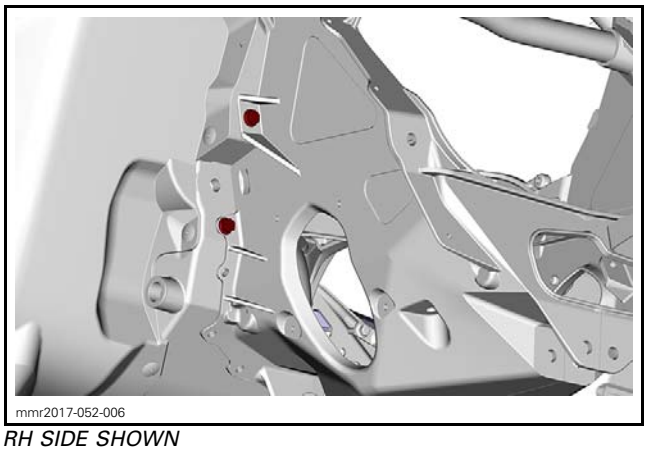
mmr2017-052-006
*RH SIDE SHOWN*

13. Remove the front suspension module.

## Installing the Front Suspension Module

The installation is the reverse of the removal procedure. However, pay attention to the following.

Refer to exploded view for proper tightening torque.

Install fasteners as per the following sequence.

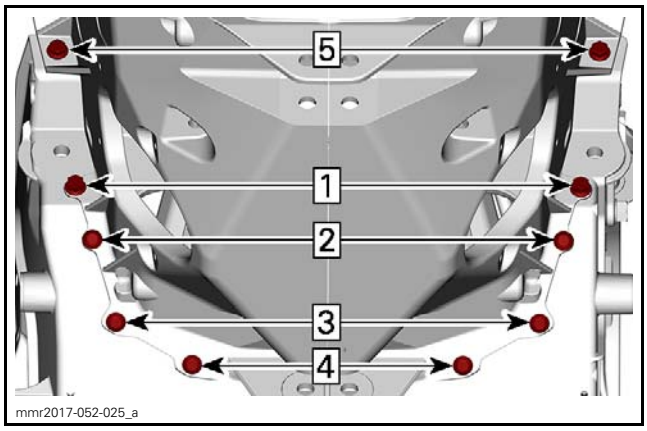

mmr2017-052-025_a

# ENGINE MODULE

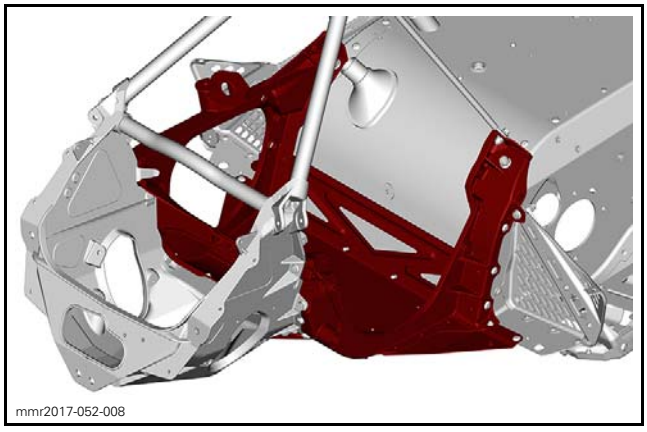
mmr2017-052-008

## Removing the Engine Module

1. Remove the *FRONT SUSPENSION MODULE*, see procedure in this subsection.
2. Remove RH side bottom pan. Refer to *BODY* subsection.
3. Remove the RH side engine rubber mount. Refer to *ENGINE*.subsection.
4. Detach side frame members from engine module.

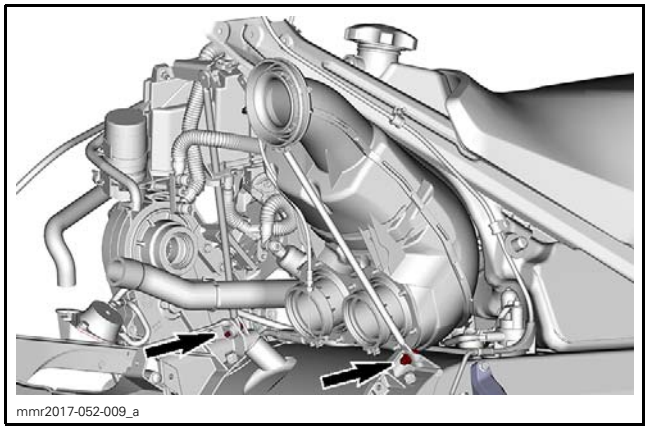
mmr2017-052-009_a

5. Remove toe hook fasteners, if equipped.

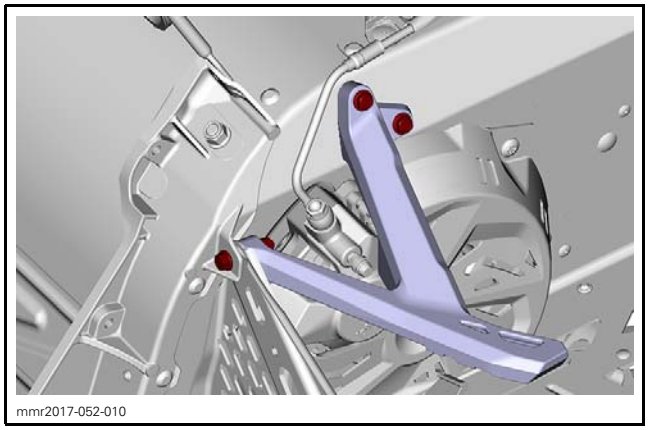
mmr2017-052-010

6. Remove the chaincase cover. Refer to *CHAINCASE* subsection.
7. Remove the screw that secure the chaincase to the engine module.

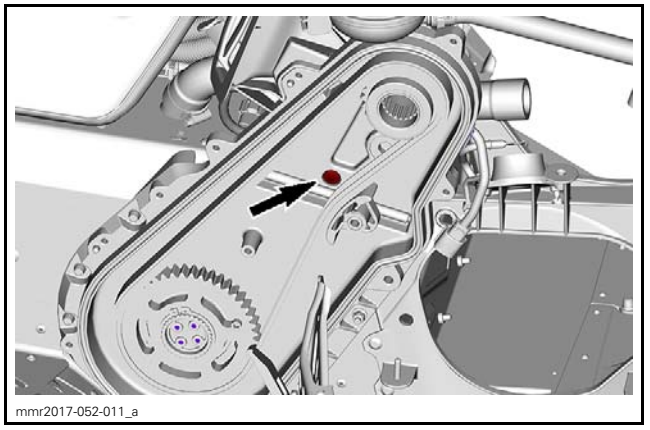
mmr2017-052-011_a

8. Remove the electrical ground screw located between the chaincase and the engine mount.

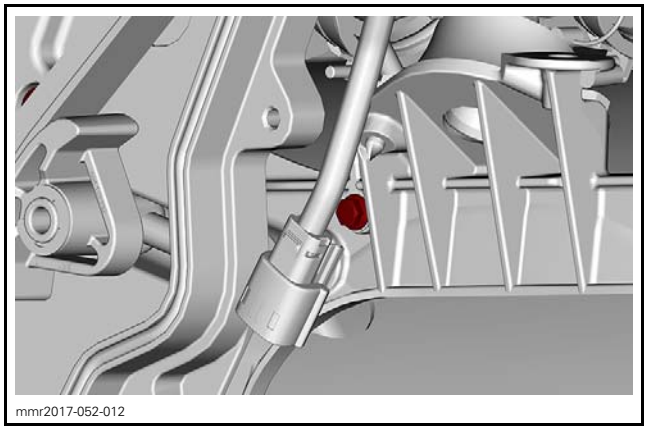
mmr2017-052-012

9. Remove rivets and bolts as per the following illustrations. Refer to *REMOVING A POP RIVET* in this subsection.

**NOTICE** **It is highly recommended to support the frame locally around a Hemlock rivet when punching its nail out.**

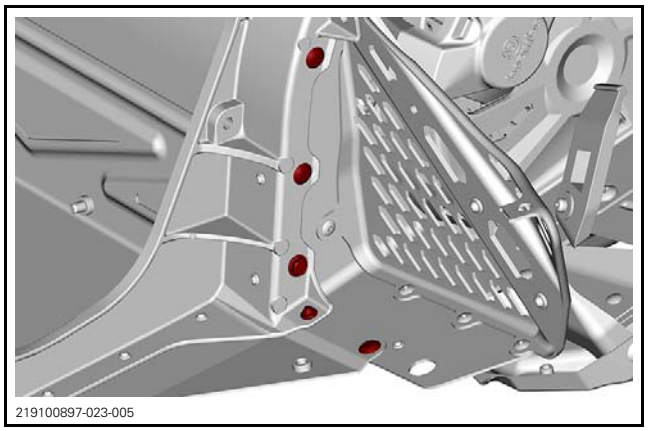
219100897-023-005

*LH SIDE*

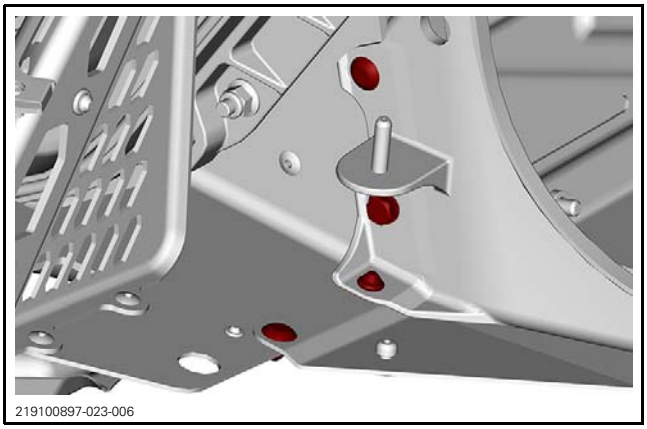


*RH SIDE*

10. Remove nuts and screws securing the engine module to the tunnel.

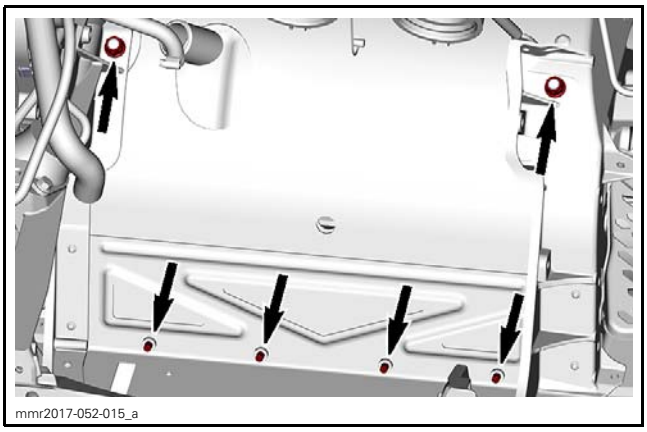


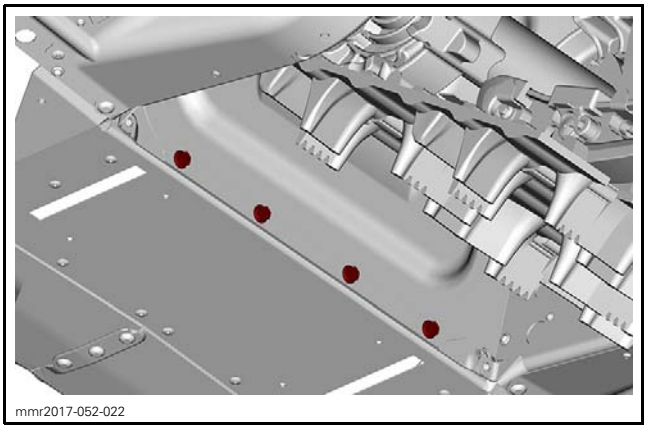


*VIEW FROM INSIDE THE TUNNEL*

11. Remove the engine module.

If only one of the two side members is replaced:

### *Models with Reinforcement Plate*

Remove the rivets and bolts retaining the reinforcement plate.

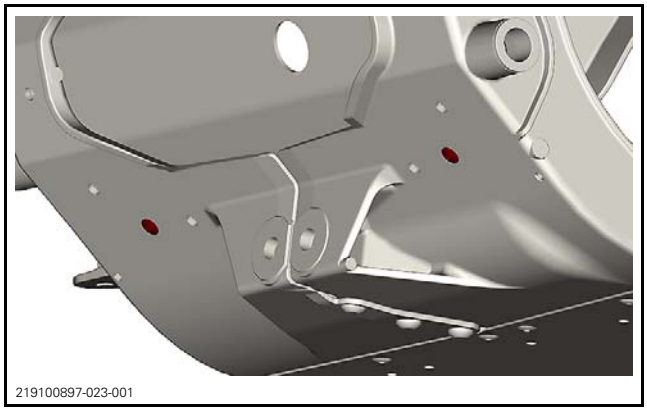


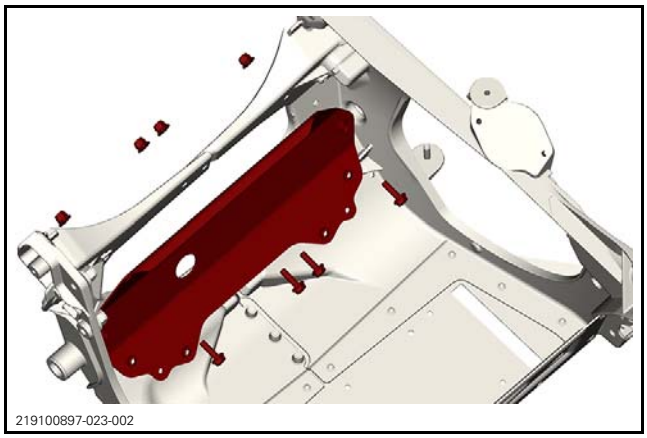


Remove HUCK rivets as per the procedure in this subsection.

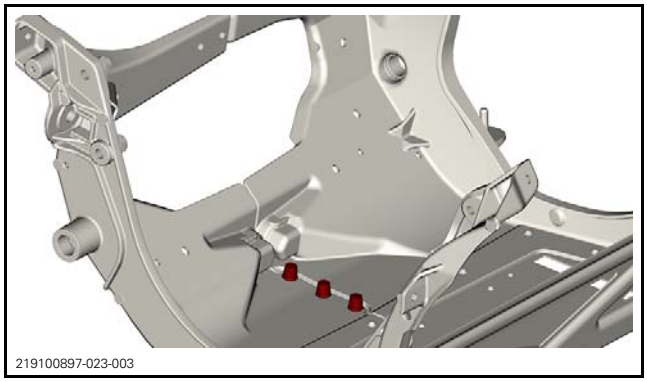


### *Models without Reinforcement Plate*

Remove HUCK rivets and bolts as per the procedure in this subsection.

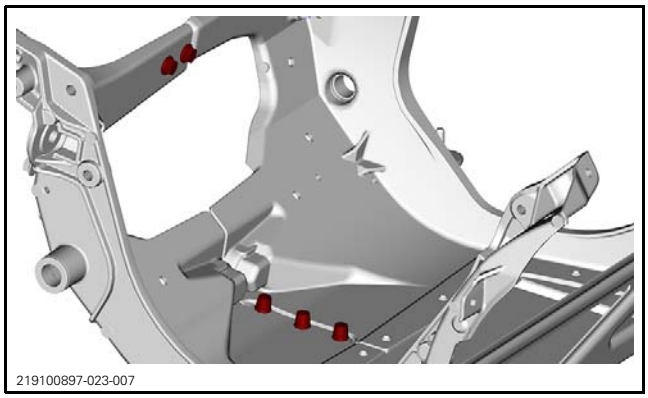
219100897-023-007

## Installing the Engine Module

The installation is the reverse of the removal procedure. However, pay attention to the following.

Assemble LH and RH side frame member before to fix on the tunnel module.

If the HUCK rivets were removed, replace with the following parts.

| NEW FASTENERS | |
|---|---|
| Torx screw M6 x 20 | (P/N 250000712) |
| Hexagonal flanged elastic stop nut M6 | (P/N 233261414) |

**NOTE:** Install the 3 bottom screws with heads downwards and the 2 upper screws with heads towards the engine.

Install all screws and rivets in there hole (including reinforcement fasteners) before tightening and riveting.

Refer to exploded view for proper tightening torque. Use standard tightening torque when not specified.

# TUNNEL MODULE

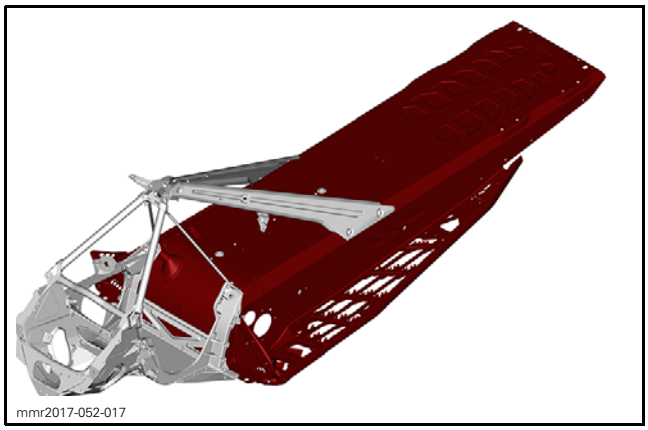
mmr2017-052-017

## Removing the Tunnel Module

1. Drain cooling system, Refer to *COOLING SYSTEM - VEHICLE COMPONENTS* subsection.
2. Place a wooden box under the engine module to support the frame.
3. Refer to the appropriate subsection and remove:
   - Driven pulley and countershaft
   - Fuel tank
   - Primary air intake silencer
   - LH bottom pan
   - Track
4. Remove the remaining drive belt guard bracket screw.

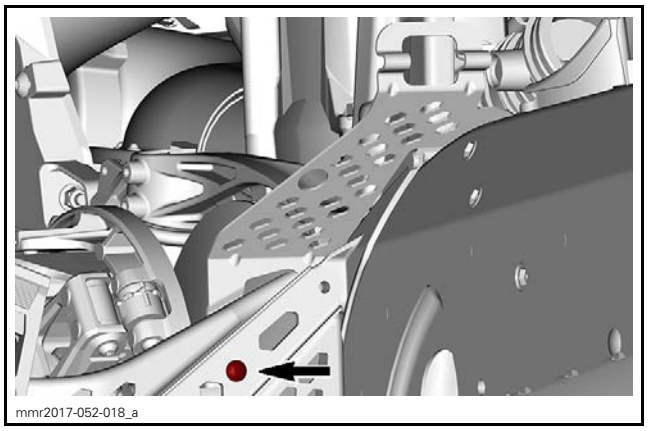
mmr2017-052-018_a

5. Disconnect the starter cable from the solenoid, if equipped.
6. Disconnect and remove the electric harness from the plastic bracket.

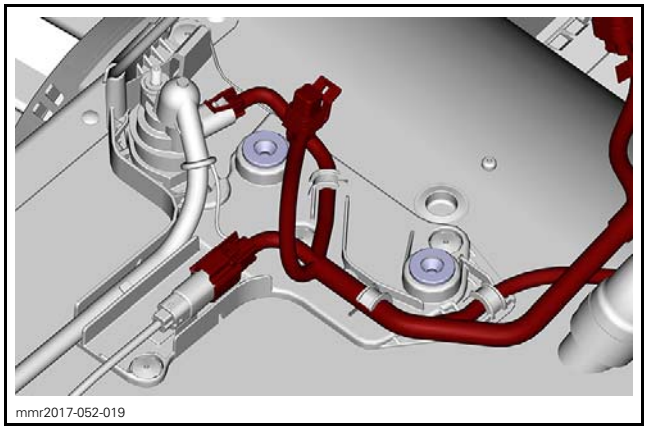
mmr2017-052-019

7. If the tunnel is replaced, remove:
   - Chaincase
   - The plastic bracket
   - Devices that retain the battery cable, if equipped
   - Rear bumper

– Taillight
– Snowguard.

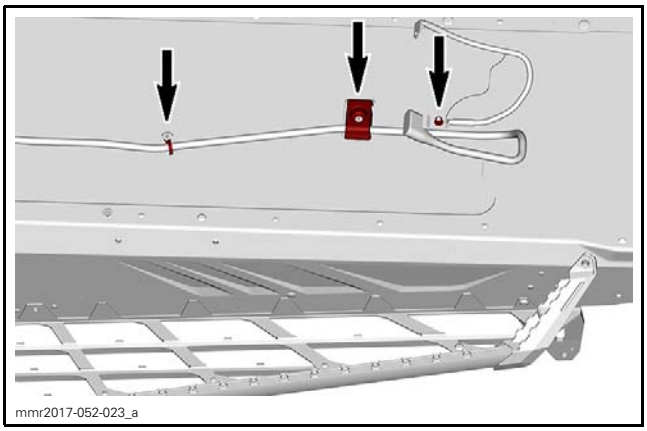
mmr2017-052-023_a

8. Move the plastic bracket, electrical harness, and fuel hoses aside to clear the tunnel.
9. Loosen the coolant hose clamps and disconnect hoses.

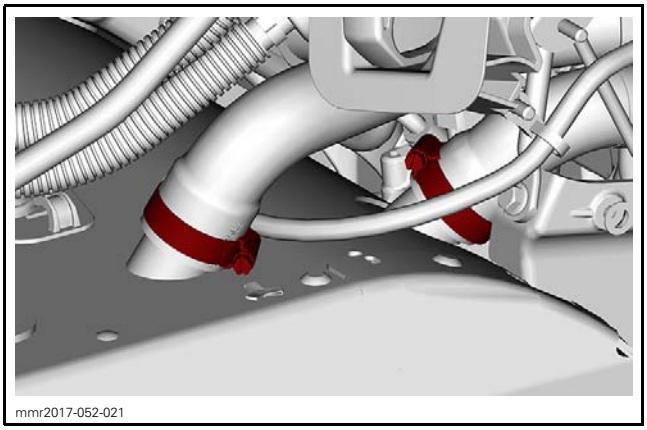
mmr2017-052-021

10. Remove rivets as per the following illustrations. Refer to *REMOVING A POP RIVET* in this subsection.

**NOTICE** **It is highly recommended to support the frame locally around a Hemlock rivet when punching its nail out.**

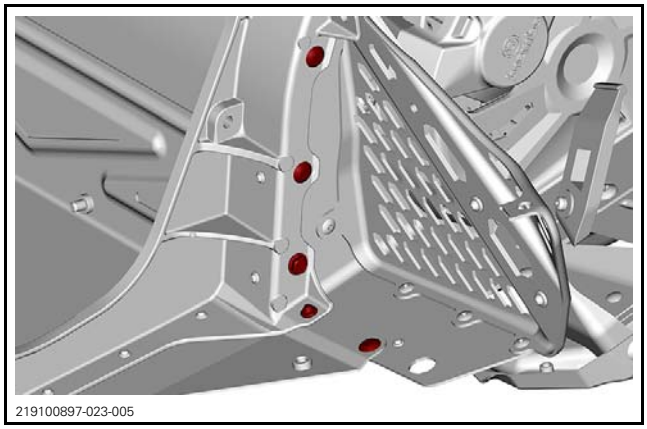
219100897-023-005

*LH SIDE*

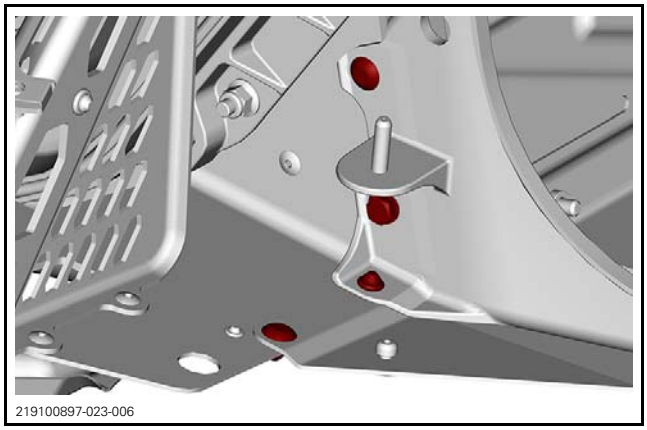
219100897-023-006

*RH SIDE*

11. Remove nuts and screws securing the engine module to the tunnel.

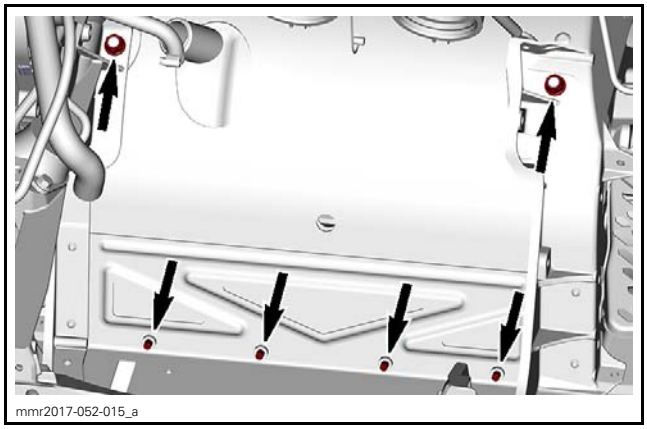
mmr2017-052-015_a

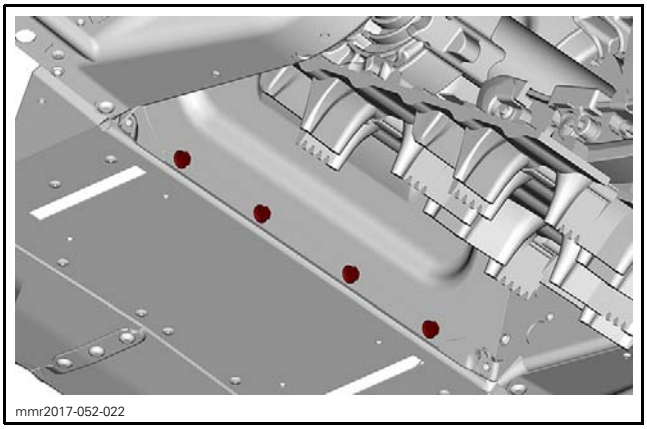
mmr2017-052-022

*VIEW FROM INSIDE THE TUNNEL*

12. Separate the tunnel module from the rest of the frame.
13. Remove the tunnel protectors under the tunnel, if equipped.

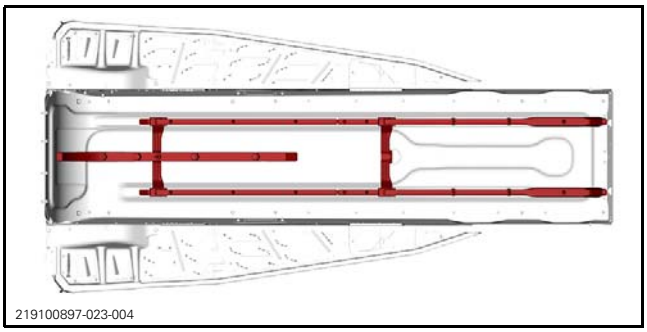
219100897-023-004

## Installing the Tunnel Module

The installation is the reverse of the removal procedure. However, pay attention to the following.

Refer to exploded views or appropriate subsections for proper tightening torque.

Properly refill cooling system. Refer to *COOLING SYSTEM - VEHICLE COMPONENTS* subsection.

# HEAT EXCHANGER

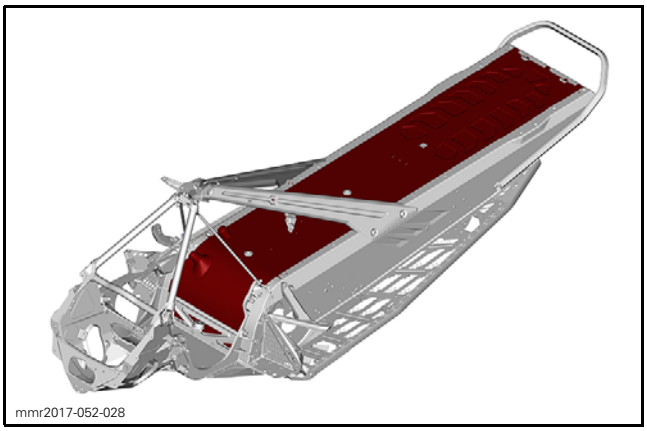
mmr2017-052-028

## Replacing the Heat Exchanger

1. Remove the tunnel. Refer to the procedure in this subsection.

Do not remove the chaincase.

2. Remove the tunnel rear cap. Refer to *RIVETS* in this subsection.

**NOTICE** It is highly recommended to support the frame locally around a Hemlock rivet when punching its nail out.

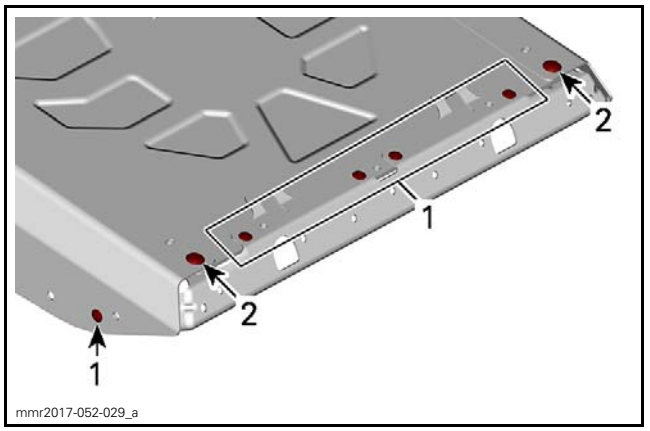

mmr2017-052-029_a

1. *Avibulb rivets (pop rivets)*
2. *Hemlock rivets (pop rivets)*

3. Remove the following rivets.

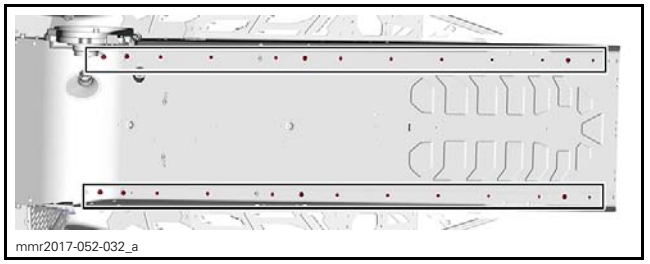
mmr2017-052-032_a

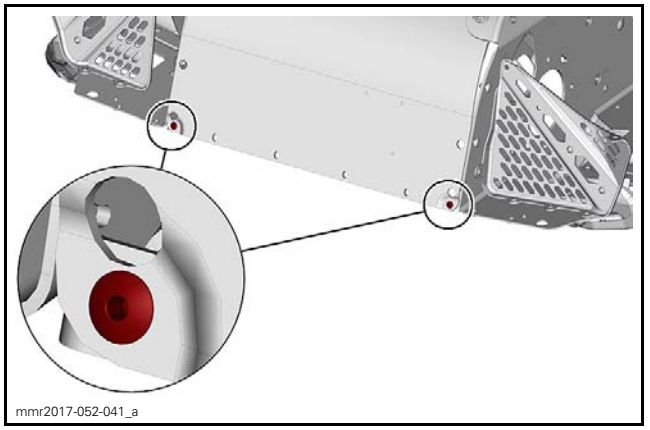
mmr2017-052-041_a

4. Position the new heat exchanger.
5. Install M6 screws and nuts loosely in the Hemlock rivet holes.

NOTE: M6 screws will not fit in self-piercing rivet holes.

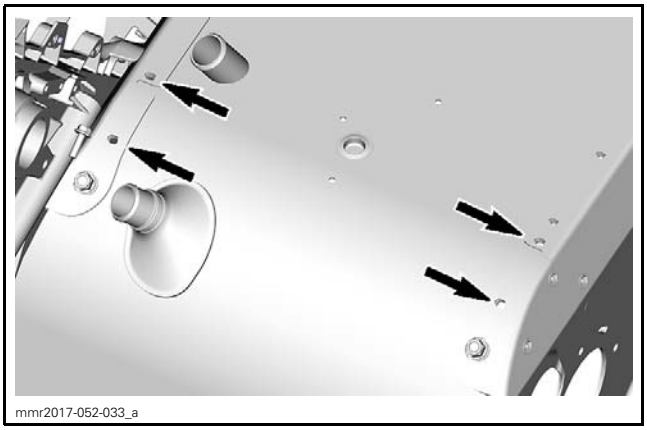


*FRONT RIVET HOLES*

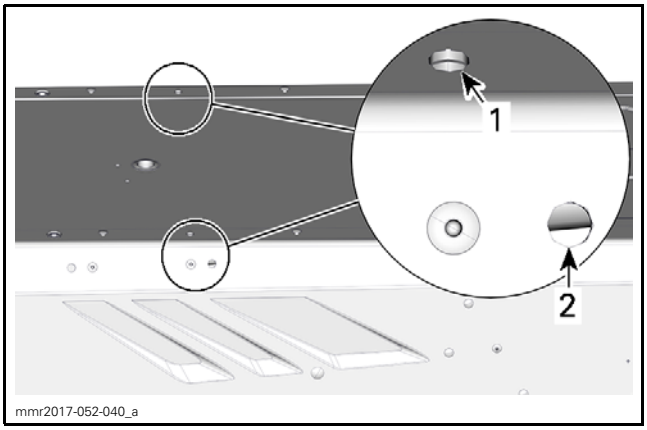


*MID-LENTGH RIVET HOLES*
1. *Install M6 screws and nuts here*
2. *Rear mounting hole for rear frame member*

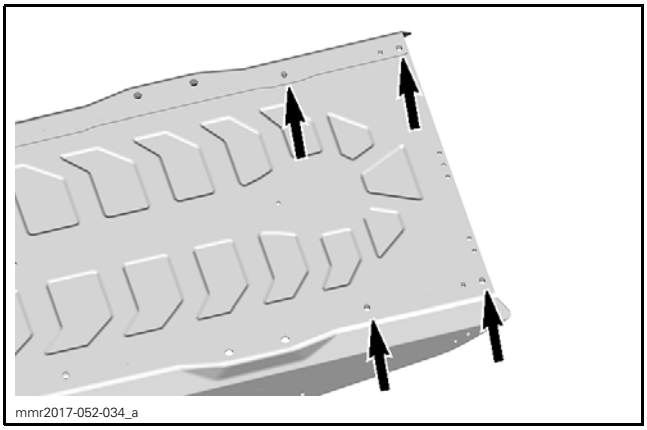


*REAR RIVET HOLES*

6. Install the gauge kit (according to vehicle model) loosely with the appropriate screws, as per the following illustrations.

**NOTICE** It is imperative to use the gauge kit and to follow each steps of this procedure to avoid drive axle misalignment.

| MODEL | REQUIRED TOOL | |
|---|---|---|
| 16in Track | RADIATOR INSTALLATION GAUGES (P/N 529 036 422) |  |
| 20in Track | RADIATOR INSTALLATION GAUGES (P/N 529 036 504) |  |

| CYLINDRICAL GAUGES LENGHT | |
|---|---|
| Rear suspension hole gauges | 419.2 mm (16-1/2 in) |
| Tail gauge | 426.4 mm (16-25/32 in) |

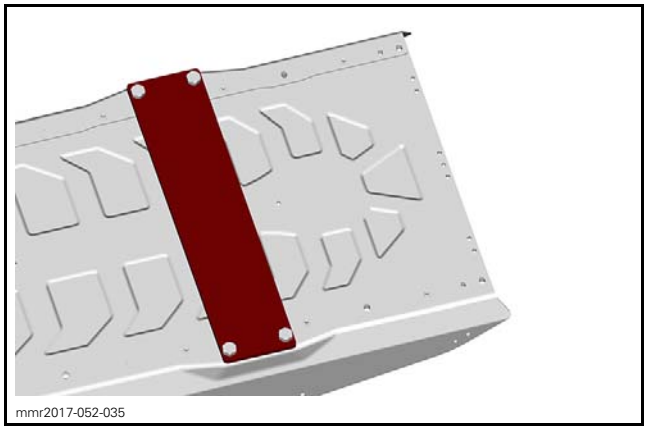


*1 LINQ KIT FRAME*

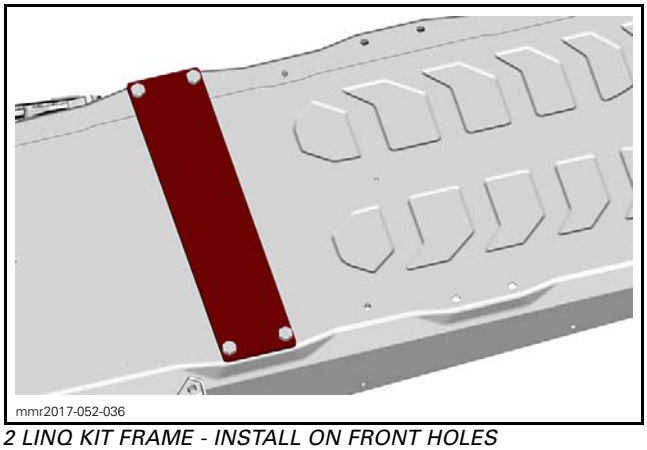


*2 LINQ KIT FRAME - INSTALL ON FRONT HOLES*

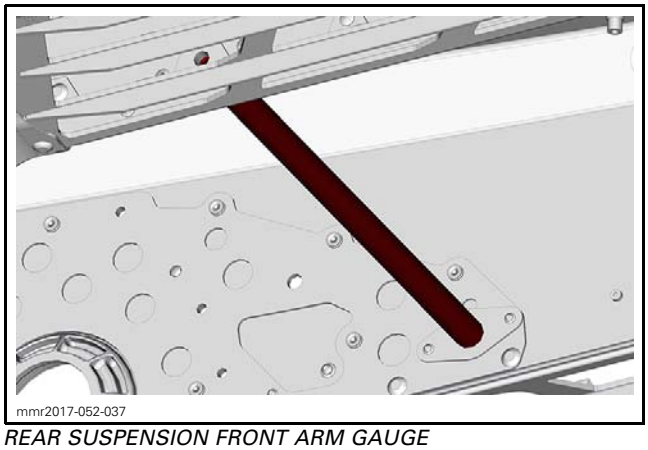


*REAR SUSPENSION FRONT ARM GAUGE*

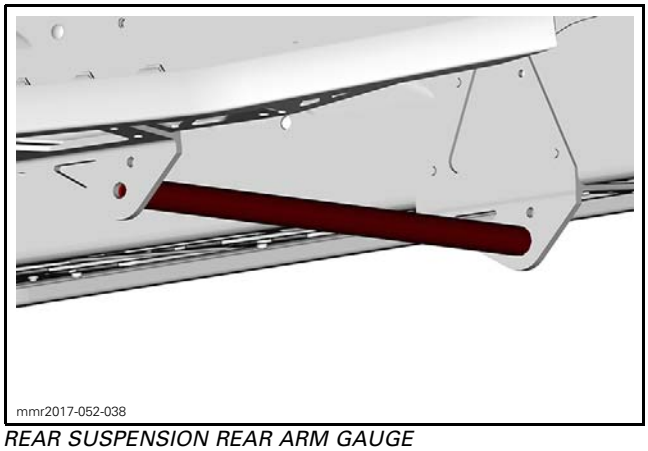


*REAR SUSPENSION REAR ARM GAUGE*

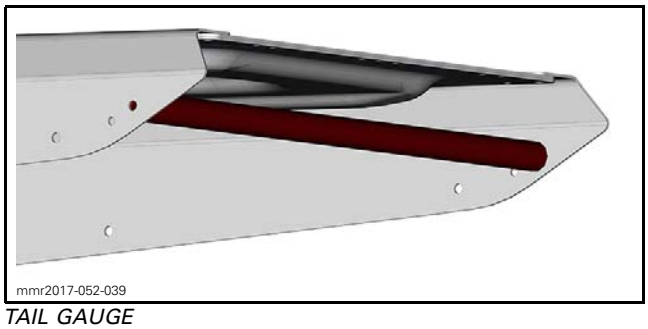


*TAIL GAUGE*

7. Install the drive axle. Refer to *DRIVE AXLE* subsection.

NOTE: It is not required to install the chain and the brake disc.

8. Tighten gauges and M6 screws with standard torque.
9. Enlarge self-piercing rivet holes.

| REQUIRED TOOL |
|---|
| Drill bit6.35 mm (1/4 in) |

10. Install Hemlock rivets in enlarged holes.

| REQUIRED PARTS | |
|---|---|
| Hemlock rivets | 293150119 |

11. Install the tunnel rear cap.

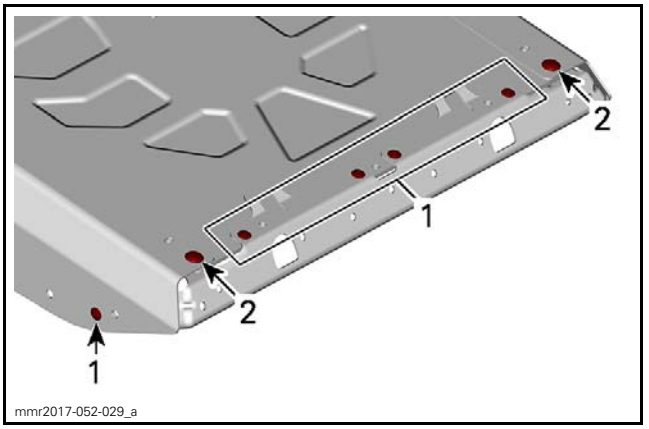


*1. Avibulb 4.76 mm (3/16 in) rivets*
*2. Hemlock 6.4 mm (1/4 in) rivets*

12. Remove the M6 screws and nuts, and install Hemlocks rivets.
13. Remove all gauges and the drive axle.
14. Reassemble the vehicle.

# COUNTERSHAFT BEARING SUPPORT

## Removing the Countershaft Bearing Support

1. Refer to the appropriate subsection and remove:
   - Injection oil tank
   - Driven pulley and countershaft
   - LH side bottom pan.
2. Disconnect the Rave valve cable. Refer to *RAVE* subsection in *ENGINE*.
3. Install a shim between the engine bottom end and the engine module.
4. Remove both engine mount screws.

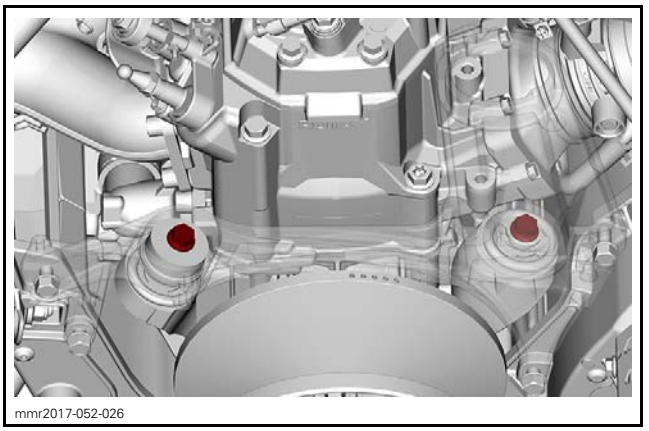


*FRAME MEMBER IS TRANSPARENT FOR CLARITY*

5. Remove countershaft bearing support screws.

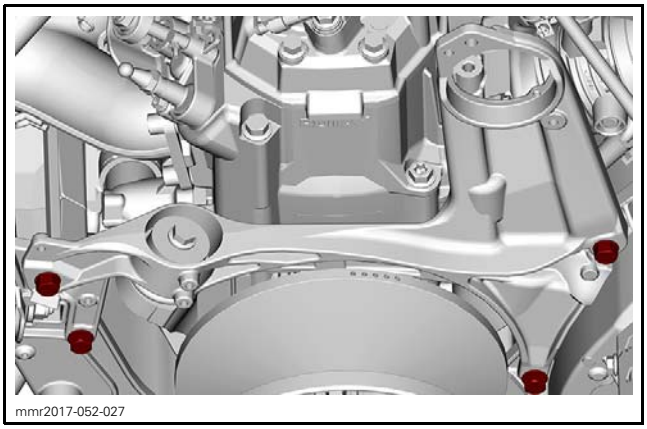
mmr2017-052-027

6. Remove the countershaft bearing support.

## Installing the Countershaft Bearing Support

The installation is the reverse of the removal procedure. However, pay attention to the following.

| IF INSTALLED ON THE SAME FRAME MEMBER | |
|---|---|
| M8 Hexagonal flange screw (all fasteners) | (P/N 207683044) |
| **IF INSTALLED ON A NEW FRAME MEMBER** | |
| M8 Hexagonal flange self-tapping screw (at rear of bearing support) | (P/N 210283040) |

Refer to exploded view for tightening torque and sequence.

# FRAME (ACE)

## SERVICE TOOLS

| Description | Part Number | Page |
|---|---|---|
| RADIATOR INSTALLATION GAUGES | 529 036 422 | 644 |
| RADIATOR INSTALLATION GAUGES | 529 036 504 | 644 |
| SUPERTANIUM DRILL BIT 3/16" | 529 031 800 | 635 |

## SUSPENSION MODULE

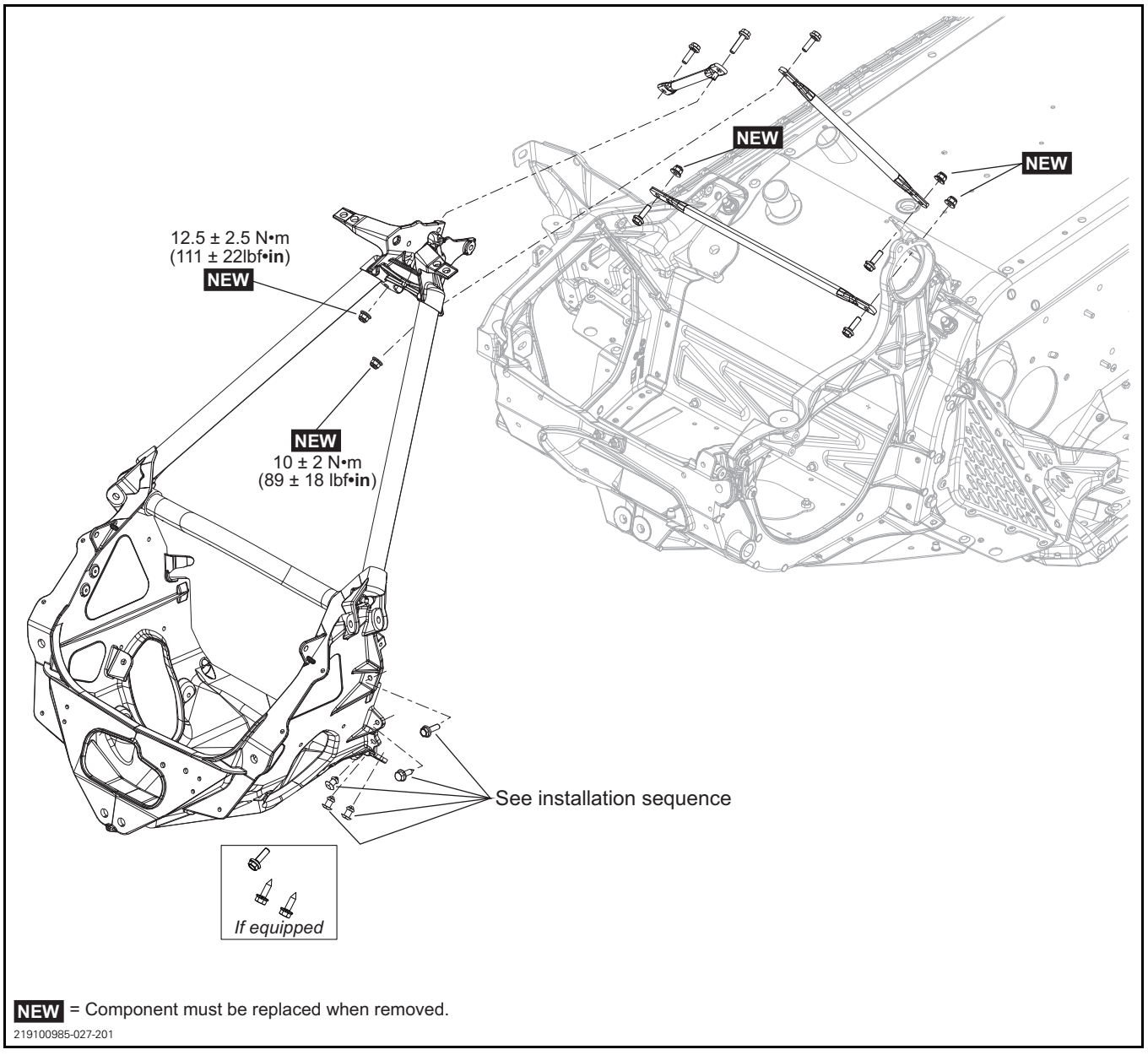


**NEW** = Component must be replaced when removed.

219100985-027-201

# ENGINE MODULE

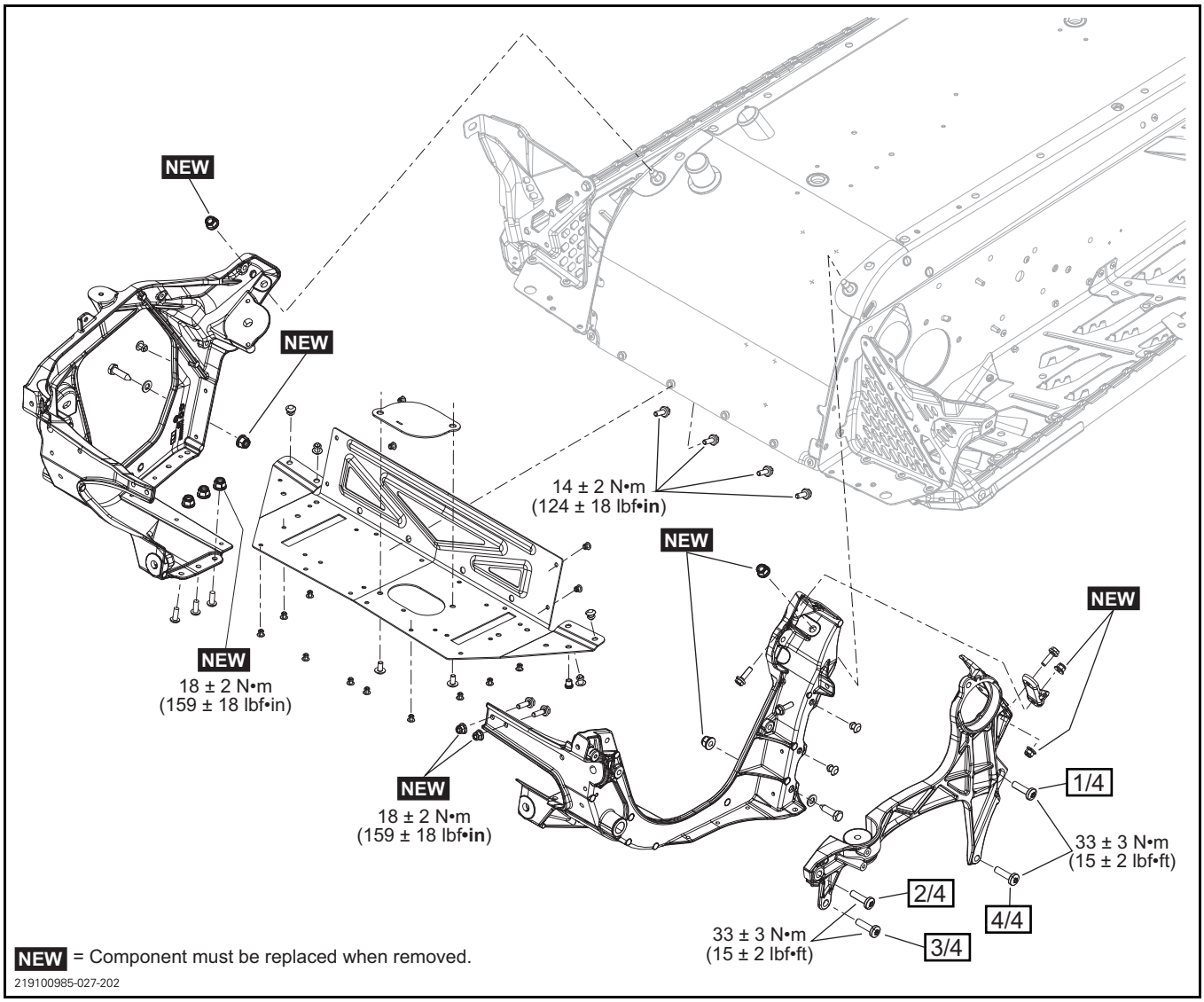

# TUNNEL MODULE

*16in Track*

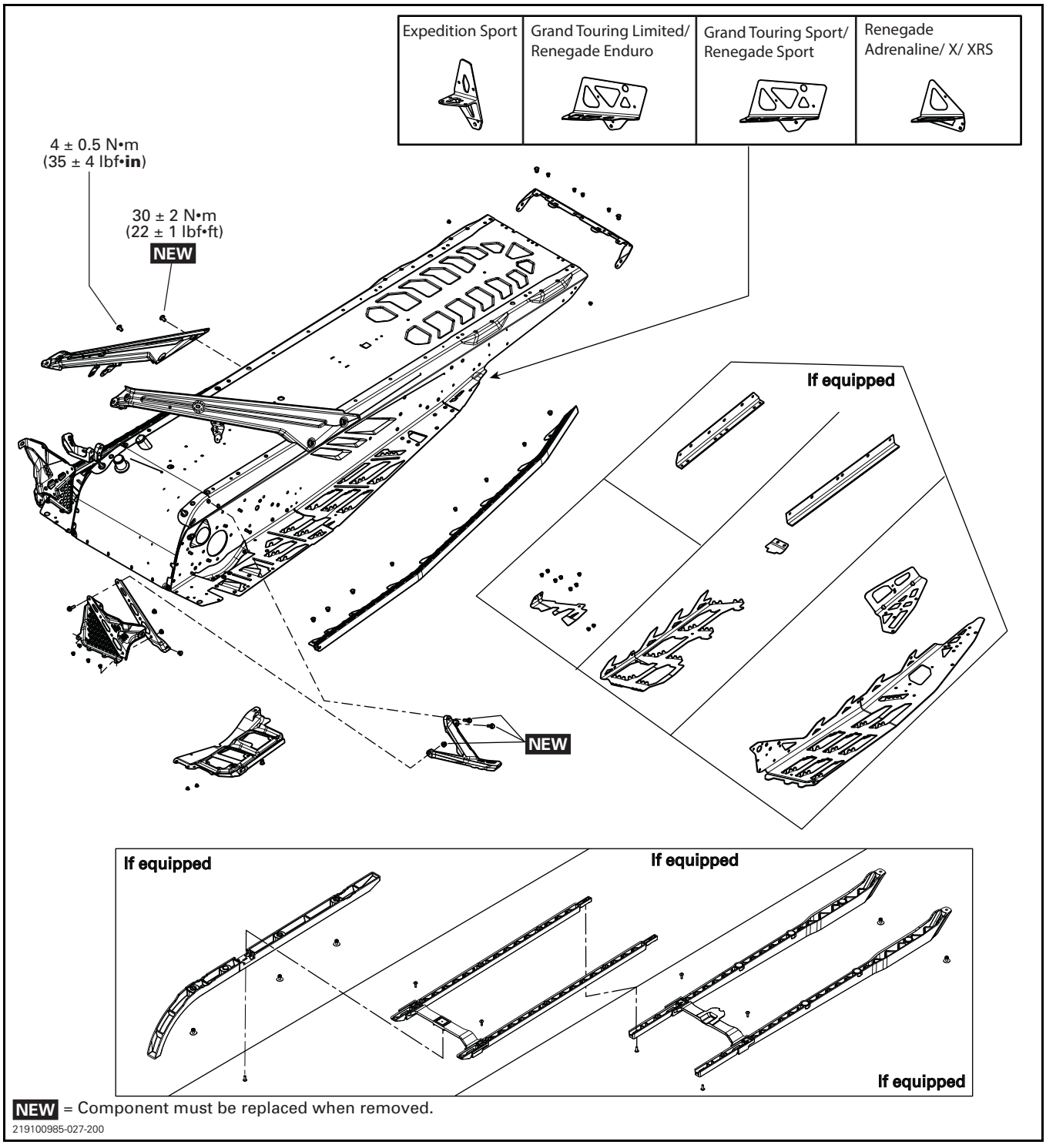


**NEW** = Component must be replaced when removed.

219100985-027-200

*20in Track*

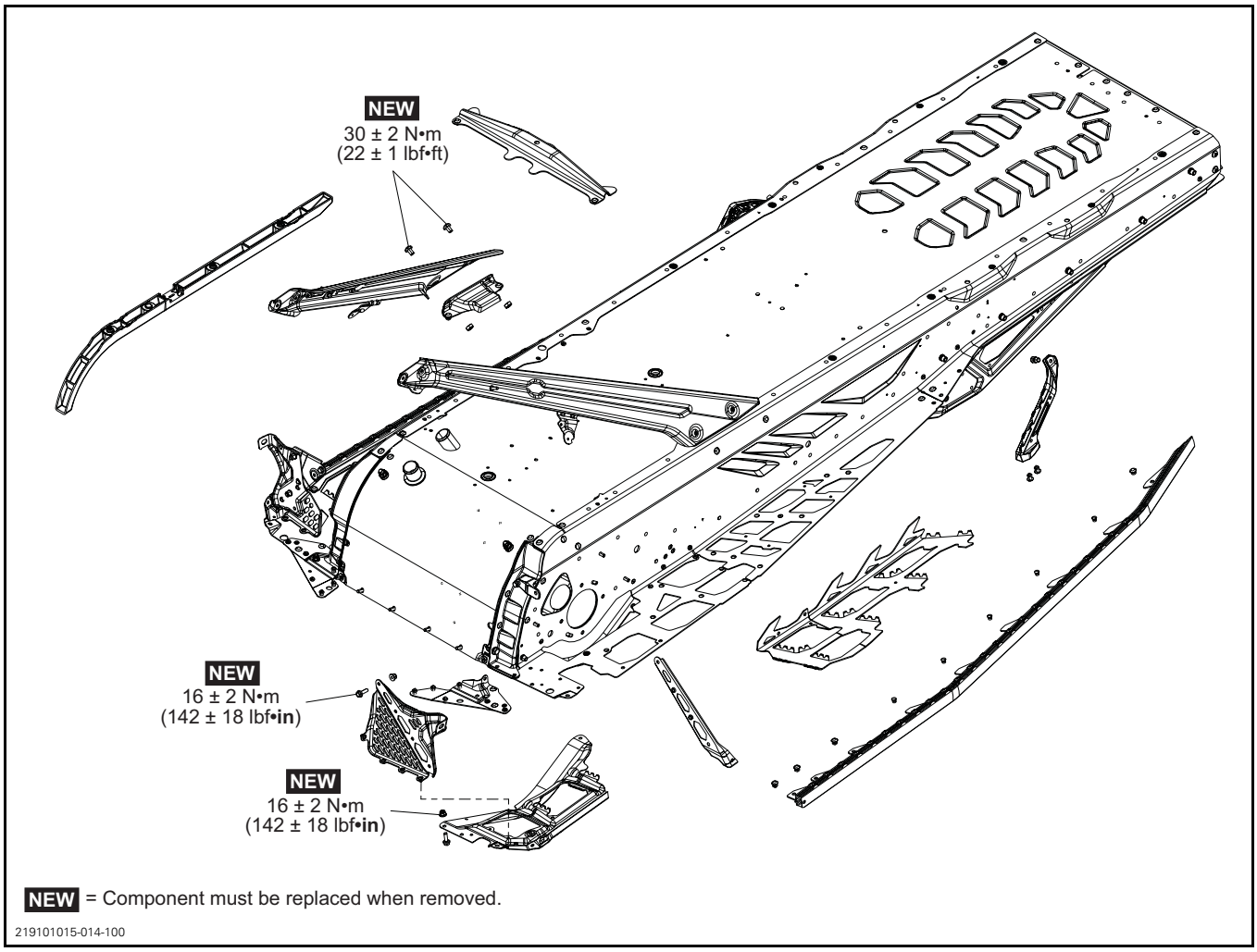


**NEW** = Component must be replaced when removed.

219101015-014-100

# GENERAL

During assembly and installation, use the torque values and the service products as in the exploded views.

Clean threads before applying a threadlocker. Refer to *SELF-LOCKING FASTENERS* and *LOCTITE APPLICATION* at the beginning of this manual for complete procedure.

**⚠ WARNING**

**Torque wrench tightening specifications must be strictly adhered to.**
**Locking devices (e.g.: locking tabs, elastic stop nuts, cotter pins, etc.) must be replaced with new ones.**

Check for loose, bent, worn out, rusted or otherwise damaged components. Replace the faulty components.

# PROCEDURES

## RIVETS

For proper drilling instructions and to prevent premature wear, follow the procedures as detailed.

***NOTICE*** **When removing rivets, do not enlarge or deform the rivet holes in the frame.**

### Removing a Self-Percing Rivet

Henrob and Thomson rivets are self-piercing rivets. They are installed with specific robotized equipment.

1. Using a grinding disk, grind the rivet end.

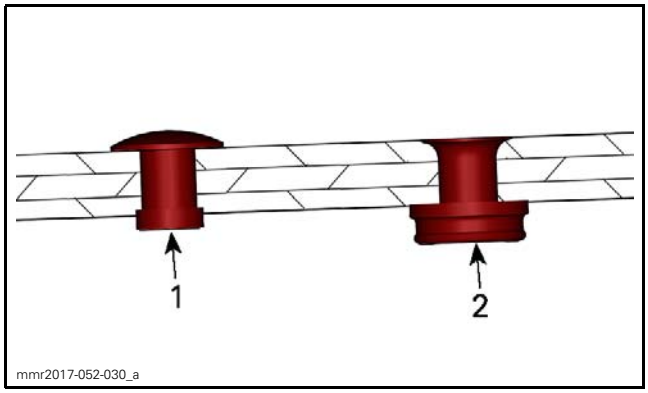


*1. Thomson rivet*
*2. Henrob rivet*

2. Support the frame around the rivet head with a socket on the opposite side to avoid warpage.

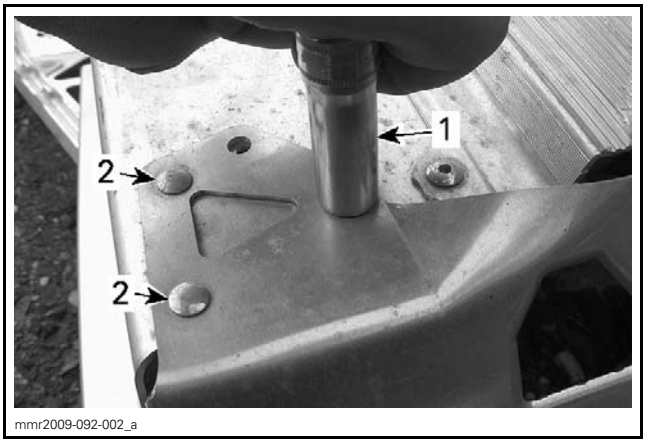


*TYPICAL*
*1. 11 mm socket over a rivet head*
*2. Rivet heads*

3. Drive out remaining rivet using a punch.

### Removing a Pop Rivet

Stavex, Avibulb, and Hemlock rivets are standard pop rivets. They are installed with standard manual or pneumatic tool.

1. Drill rivet head sufficiently to cut through it.

NOTE: To drill a Hemlock rivet, remove the riveting nail using a punch first.

***NOTICE*** **It is highly recommended to support the frame locally around a Hemlock rivet when punching its nail out.**

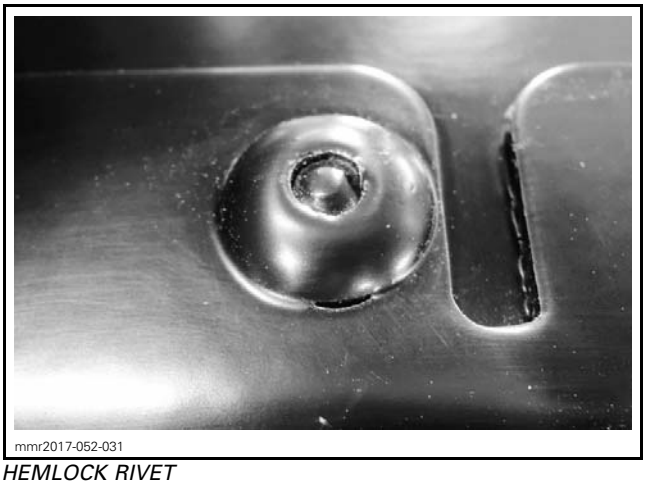


*HEMLOCK RIVET*

| RECOMMENDED TOOL |
| --- |
| SUPERTANIUM DRILL BIT 3/16" (P/N 529 031 800) |

***NOTICE*** **Drill only sufficiently to cut rivet head. Do not drill into frame material, or part secured using the rivet. When rivet is used to secure a plastic part, use pliers to avoid rotation of rivet with drill bit and heating or melting of the plastic part.**

2. Using a small punch, drive out the remaining rivet end.

### Removing a HUCK Rivet

Huck rivet is a 2 parts type rivet. It is installed with a specific pneumatic tool.

1. Using a cut-off tool, cut the rivet retainer without touching the retainer's shoulder.

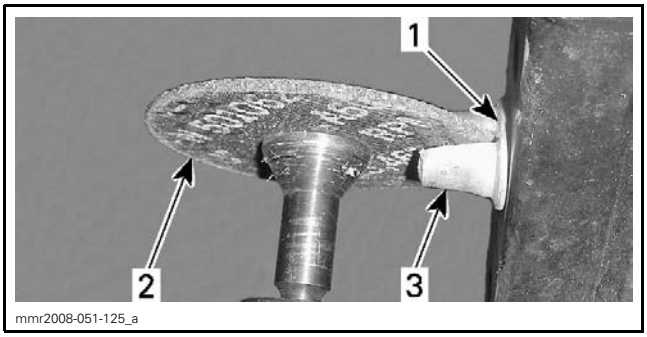

mmr2008-051-125_a

*1. Rivet retainer's shoulder*
*2. Cutter wheel*
*3. Rivet retainer*

NOTE: Apply a thin layer of grease on cutter wheel to increase its durability.

2. Break the rivet retainer's shoulder using a chisel.
3. Use a small punch to drive out the rivet stem.

## FRAME

### Cleaning the Frame

Clean frame and tunnel with appropriate cleaners and rinse with high pressure hose.

NOTE: For bare aluminum frames use only aluminum cleaner and follow instructions on container.

**NOTICE** **Never direct high-pressure water jet towards decals. They will peel off.**

### Welding the Frame

No welding is permitted unless it is specified on a BRP bulletin.

However, the heat exchanger can be welded to plug a small leak.

### Repairing the Frame

The following is specific information for aluminum chassis painting. Use common painting techniques.

1. Sand the area to be painted.
2. Clean and dry the area.
3. Apply a thin layer of paint of the appropriate color.
4. Allow paint to dry before re-coating.

NOTE: Paint takes approximately 15 minutes to dry following application.

5. Apply a thin coat of clear.
6. Immediately after the clear coat application, apply a thin coat of HR50 blending solvent **around** the painted area.
7. Allow clear coat to dry.

NOTE: Clear coat takes approximately 2 hours to dry following application.

## REAR BUMPER

Refer to *BODY* subsection for rear bumper removal and installation procedure.

## REAR FRAME MEMBER

### Removing the Rear Frame Member

1. Refer to *BODY* subsection to remove the following:
   – Seat
   – Upper body module
   – Rear console.
2. Remove fasteners as per the following illustrations.

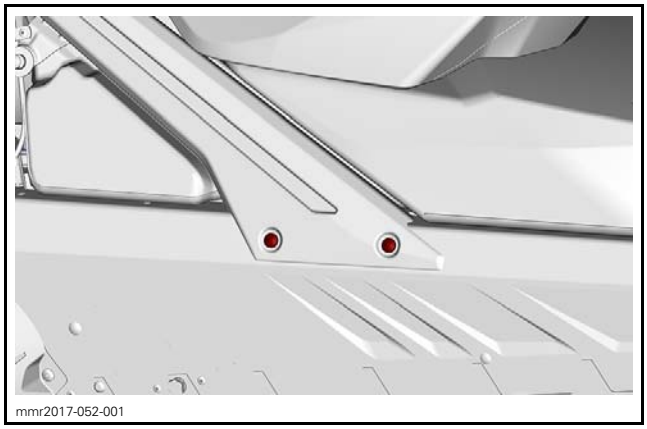
mmr2017-052-001

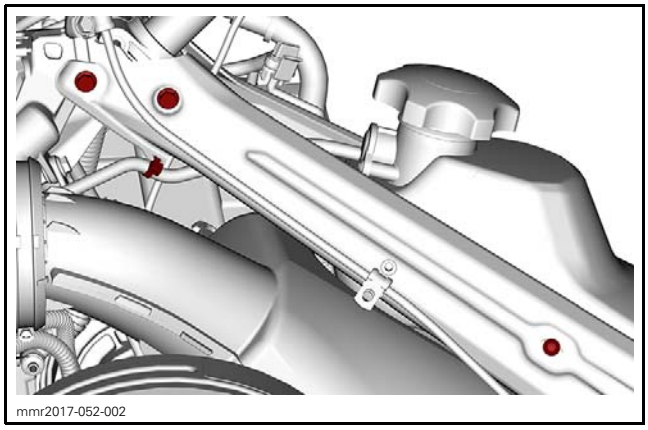
mmr2017-052-002

3. Remove rear frame member.

### Installing the Rear Frame Member

The installation is the reverse of the removal procedure. However, pay attention to the following.

Install all screws and nuts before tightening them.

Refer to exploded views for proper tightening torque.

## FRONT SUSPENSION MODULE

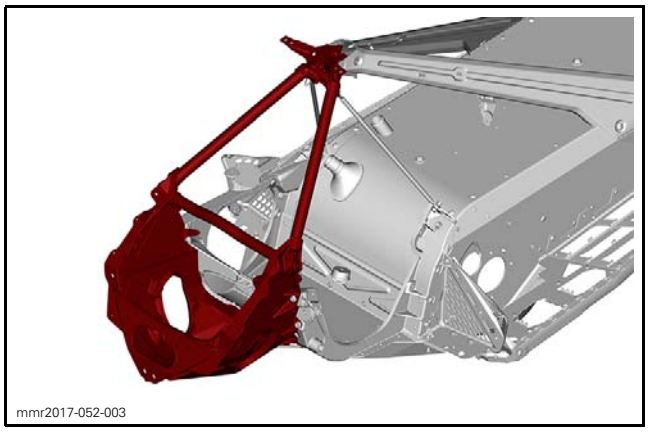
mmr2017-052-003

### Removing the Front Suspension Module

1. Lift front of vehicle until skis are off the ground.
2. Place a wooden box under the engine module to support the frame securely.
3. Refer to the appropriate subsection and remove:
   – Engine
   – Steering column.
4. Detach the brake hose clamp next of the upper steering column support.
5. Detach side frame members from upper steering column support.

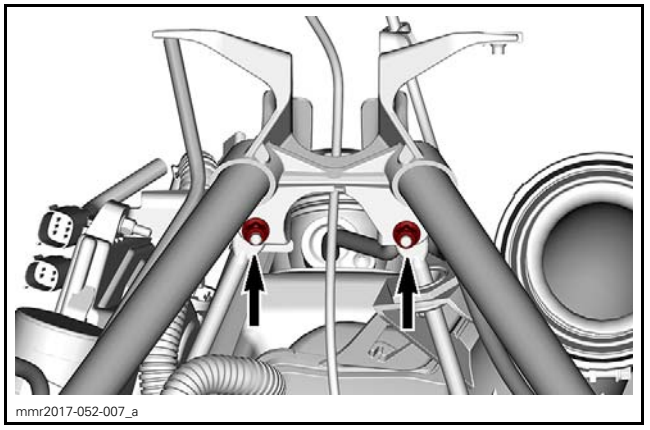
mmr2017-052-007_a

6. Remove the front suspension assembly in the following manner:
   6.1 Detach tie-rod ends from steering column.
   6.2 Remove upper shock absorber screws.
   6.3 Remove screw that secures stabilizer link to lower arm.

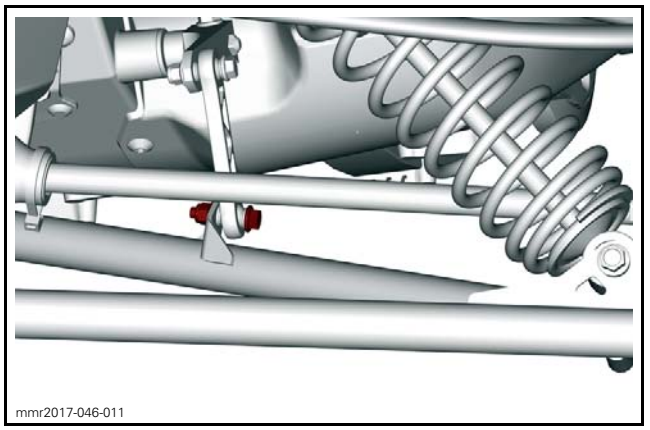
mmr2017-046-011

   6.4 Remove upper and lower suspension arms screws and nuts. Refer to *FRONT SUSPENSION* subsection.
   6.5 Remove front suspension assembly from vehicle.
7. Remove the stabilizer bar. Refer to *FRONT SUSPENSION* subsection.
8. Remove the front bottom pan. Refer to *BODY* subsection.

NOTE: Keep the front bumper installed on front bottom pan.

9. Cut locking ties that secure vents and electrical harness to module tubes.

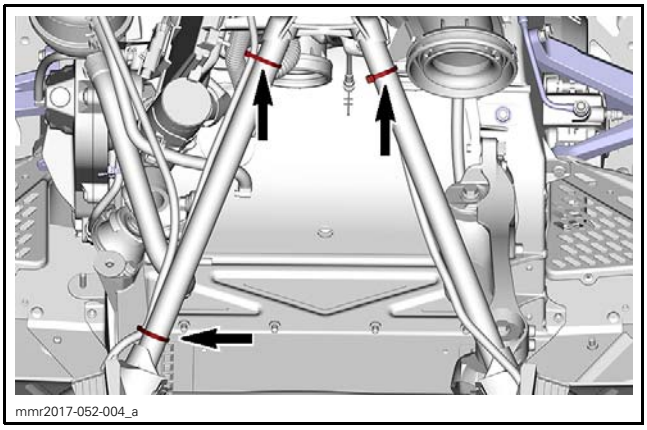
mmr2017-052-004_a

10. If the suspension module needs to be replaced, remove:
    – Steering rack / lower steering column support
    – Tie rod boots.
    Refer to *STEERING SYSTEM* subsection.
11. Remove the lower retaining fasteners.

For riveted models, refer to *REMOVING A POP RIVET* at the beginning of this subsection for procedure.

**NOTICE** **It is highly recommended to support the frame locally around a Hemlock rivet when punching its nail out.**

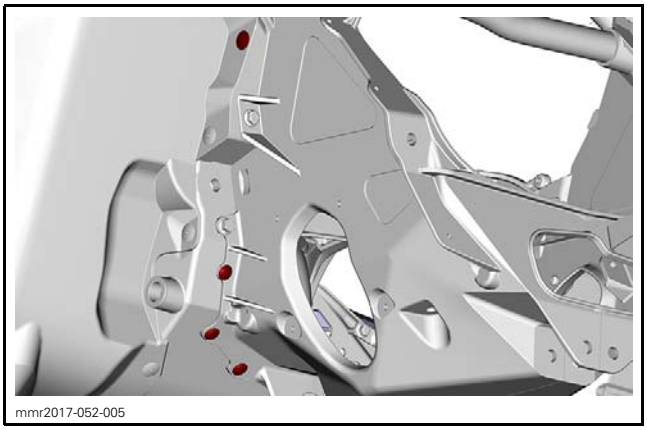
mmr2017-052-005
*RH SIDE SHOWN*

12. Remove the upper retaining fasteners.

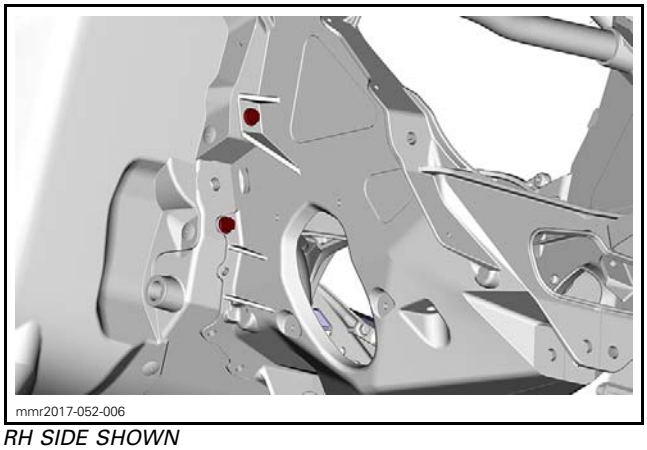
mmr2017-052-006
*RH SIDE SHOWN*

13. Remove the front suspension module.

## Installing the Front Suspension Module

The installation is the reverse of the removal procedure. However, pay attention to the following.

Refer to exploded views for proper tightening torque.

Install fasteners as per the following sequence.

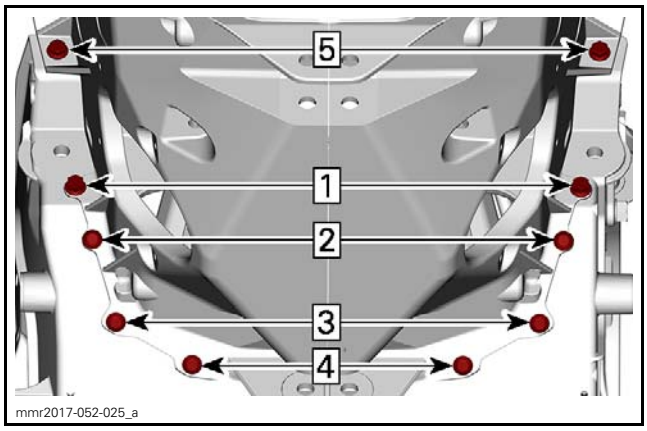

mmr2017-052-025_a

# ENGINE MODULE

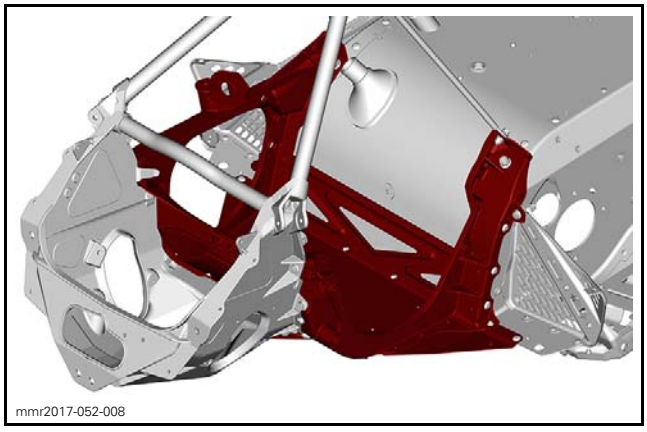
mmr2017-052-008

## Removing the Engine Module

1. Remove the *FRONT SUSPENSION MODULE*, see procedure in this subsection.
2. Remove RH side bottom pan. Refer to *BODY* subsection.
3. Remove the RH side engine rubber mount. Refer to *ENGINE REMOVAL AND INSTALLATION* subsection.
4. Detach side frame members from engine module.

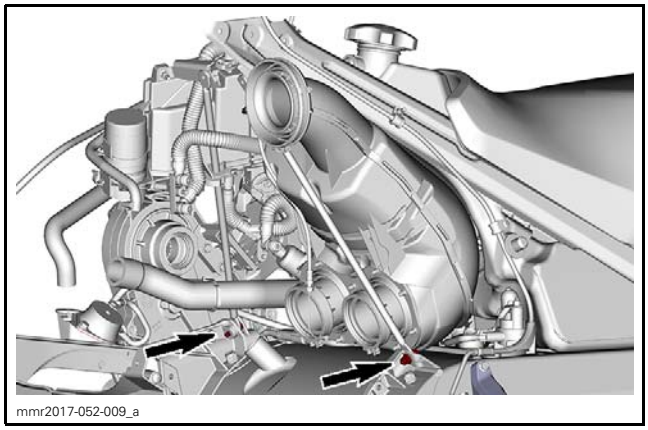
mmr2017-052-009_a

5. Remove toe hook fasteners, if equipped.

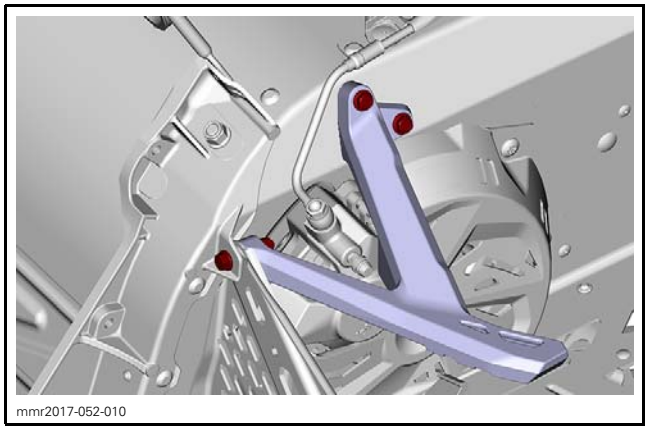
mmr2017-052-010

6. Remove the chaincase cover. Refer to *CHAINCASE* subsection.
7. Remove the screw that secure the chaincase to the engine module.

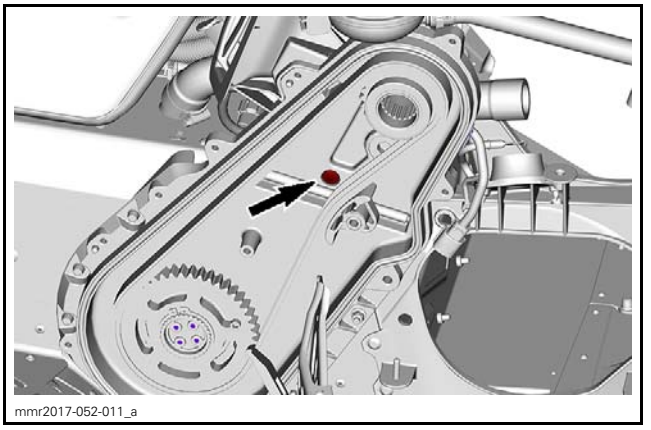
mmr2017-052-011_a

8. Remove the electrical ground screw located between the chaincase and the engine mount.

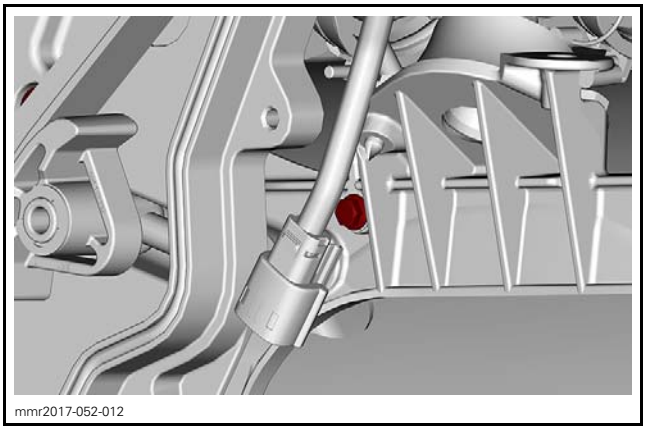
mmr2017-052-012

9. Remove rivets and bolts as per the following illustrations. Refer to *REMOVING A POP RIVET* in this subsection.

**NOTICE** **It is highly recommended to support the frame locally around a Hemlock rivet when punching its nail out.**

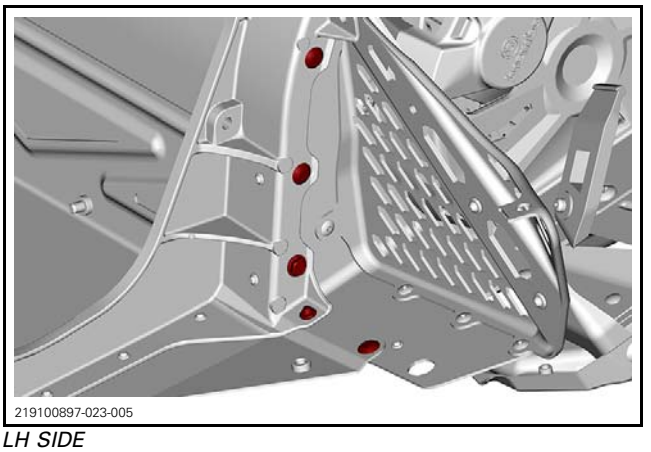
219100897-023-005

*LH SIDE*

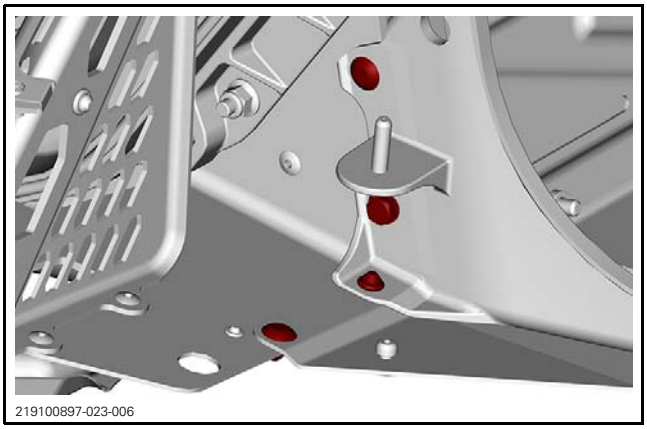


*RH SIDE*

10. Remove nuts and screws securing the engine module to the tunnel.

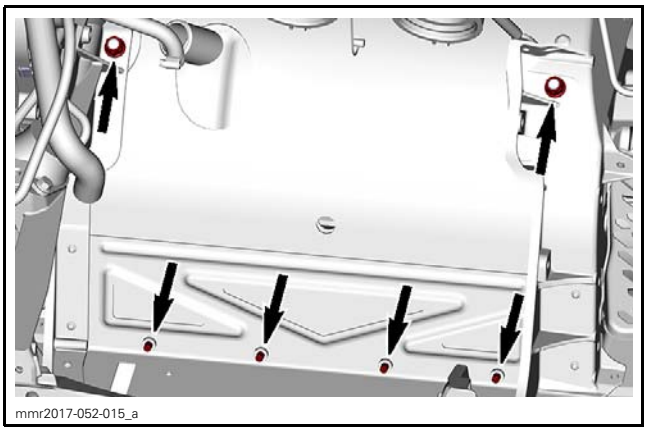


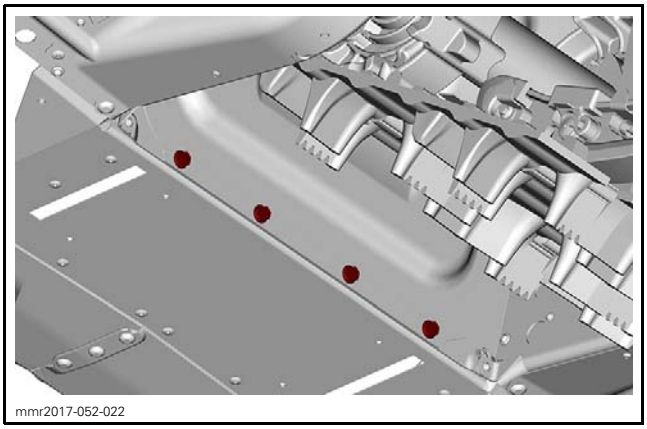


*VIEW FROM INSIDE THE TUNNEL*

11. Remove the engine module.

If only one of the two side members is replaced:

### *Models with Reinforcement Plate*

Remove the rivets and bolts retaining the reinforcement plate.

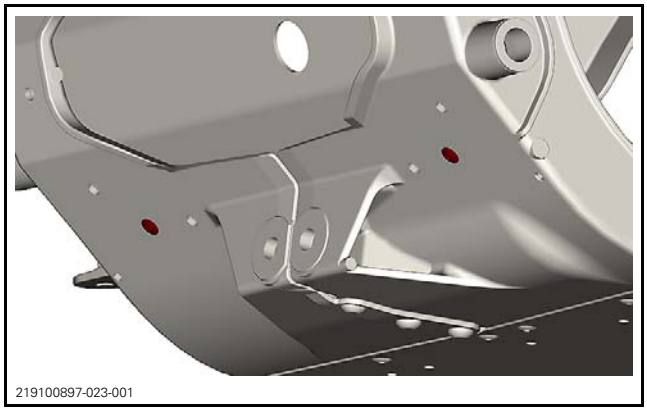


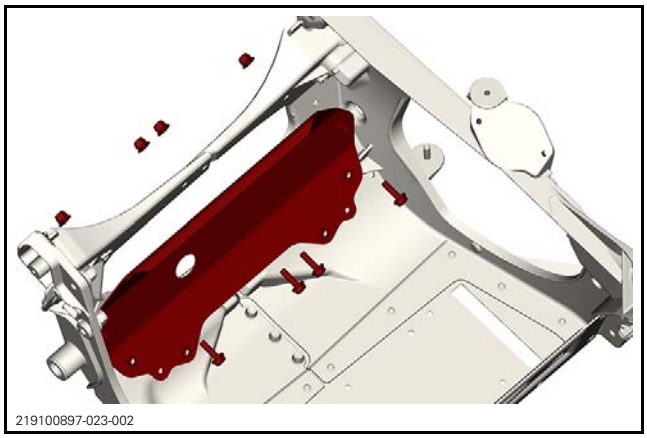


Remove HUCK rivets as per the procedure in this subsection.

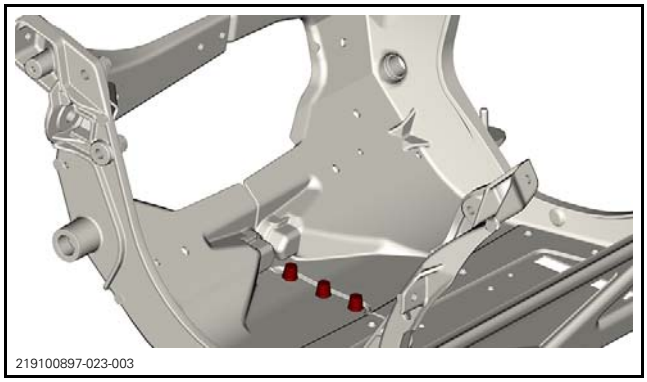


### *Models without Reinforcement Plate*

Remove HUCK rivets and bolts as per the procedure in this subsection.

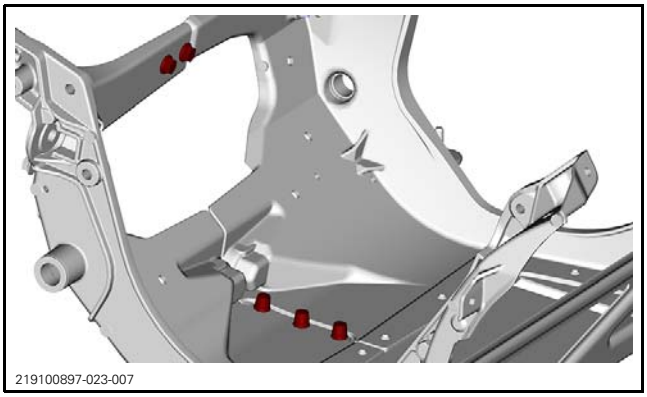
219100897-023-007

## Installing the Engine Module

The installation is the reverse of the removal procedure. However, pay attention to the following.

Assemble LH and RH side frame member before to fix on the tunnel module.

If the HUCK rivets were removed, replace with the following parts.

| NEW FASTENERS | |
|---|---|
| Torx screw M6 x 20 | (P/N 250000712) |
| Hexagonal flanged elastic stop nut M6 | (P/N 233261414) |

**NOTE:** Install the 3 bottom screws with heads downwards and the 2 upper screws with heads towards the engine.

Install all screws and rivets in there hole (including reinforcement fasteners) before tightening and riveting.

Refer to exploded views for proper tightening torque. Use standard tightening torque when not specified.

# TUNNEL MODULE

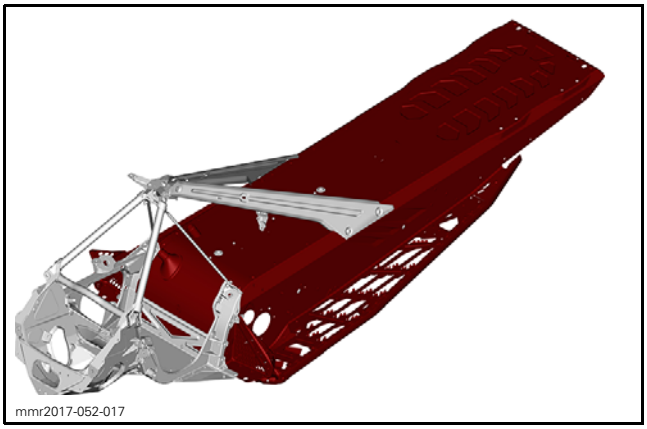
mmr2017-052-017

## Removing the Tunnel Module

1. Drain cooling system, Refer to *COOLING SYSTEM - VEHICLE COMPONENTS* subsection.
2. Place a wooden box under the engine module to support the frame.
3. Refer to the appropriate subsection and remove:
   - Driven pulley and countershaft
   - Fuel tank
   - Primary air intake silencer
   - LH bottom pan
   - Track
4. Remove the remaining drive belt guard bracket screw.

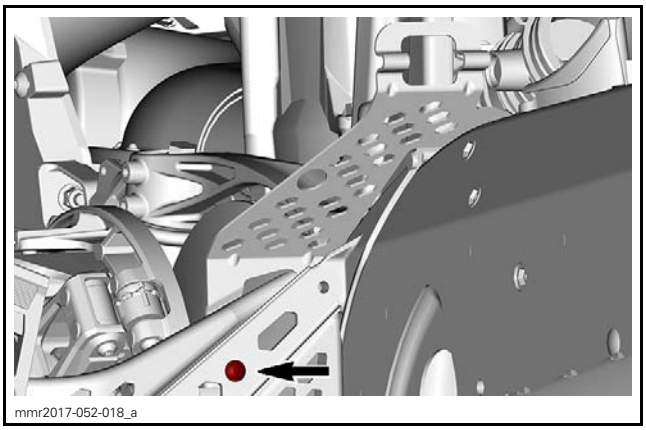
mmr2017-052-018_a

5. Disconnect the starter cable from the solenoid, if equipped.
6. Disconnect and remove the electric harness from the plastic bracket.

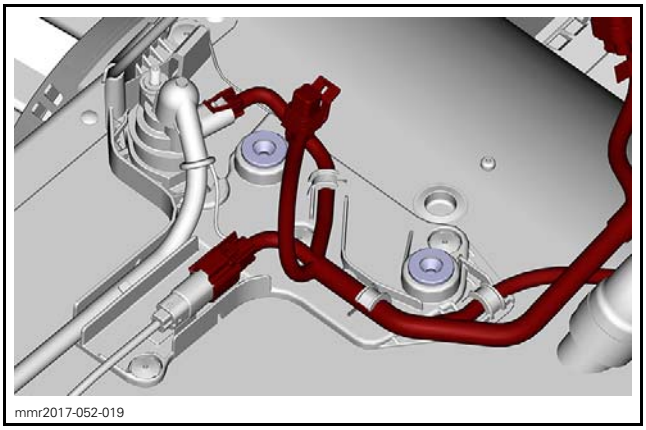
mmr2017-052-019

7. If the tunnel is replaced, remove:
   - Chaincase
   - The plastic bracket
   - Devices that retain the battery cable, if equipped
   - Rear bumper

– Taillight
– Snowguard.

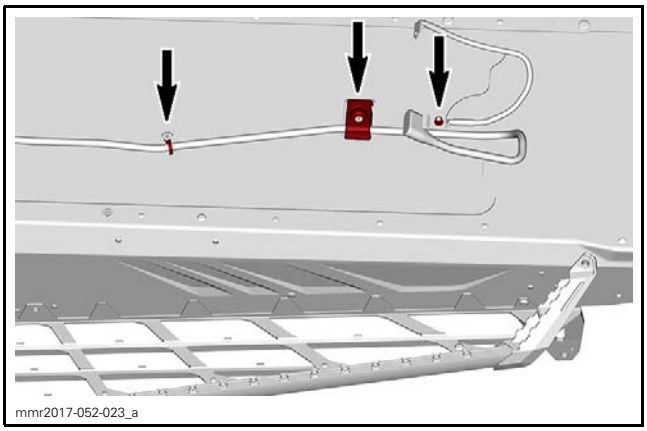
mmr2017-052-023_a

8. Move the plastic bracket, electrical harness, and fuel hoses aside to clear the tunnel.
9. Loosen the coolant hose clamps and disconnect hoses.

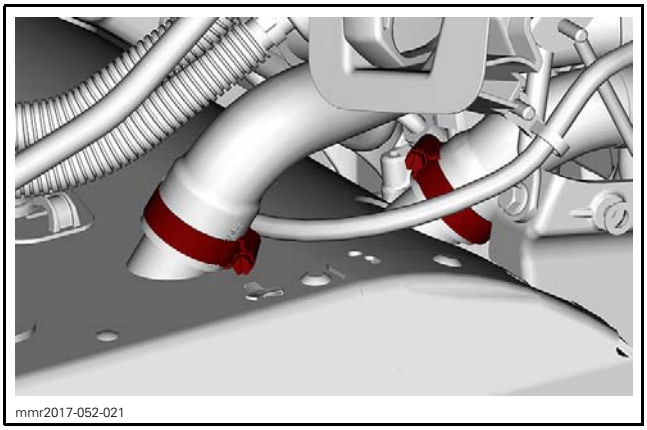
mmr2017-052-021

10. Remove rivets as per the following illustrations. Refer to *REMOVING A POP RIVET* in this subsection.

**NOTICE** **It is highly recommended to support the frame locally around a Hemlock rivet when punching its nail out.**

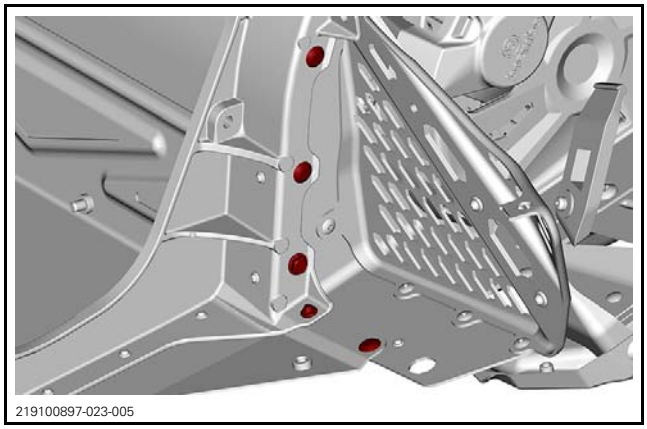
219100897-023-005

*LH SIDE*

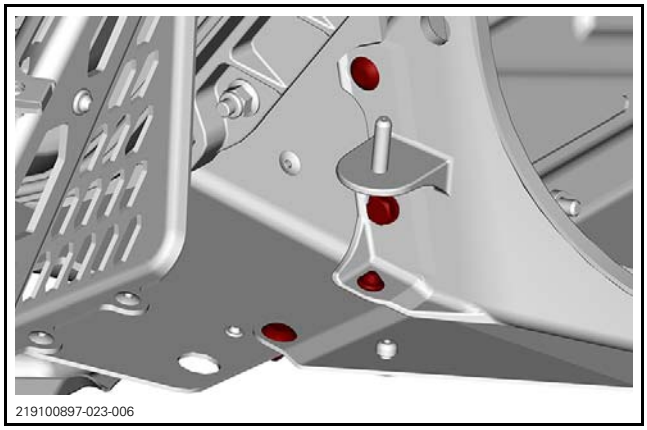
219100897-023-006

*RH SIDE*

11. Remove nuts and screws securing the engine module to the tunnel.

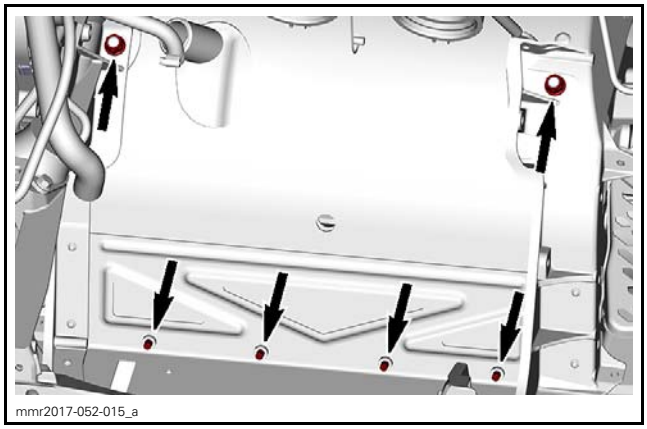
mmr2017-052-015_a

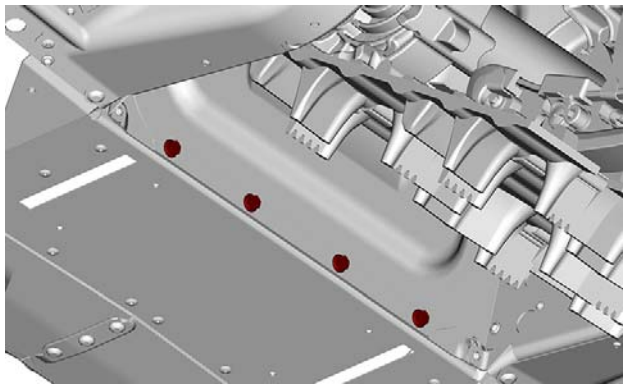
mmr2017-052-022

*VIEW FROM INSIDE THE TUNNEL*

12. Separate the tunnel module from the rest of the frame.
13. Remove the tunnel protectors under the tunnel, if equipped.

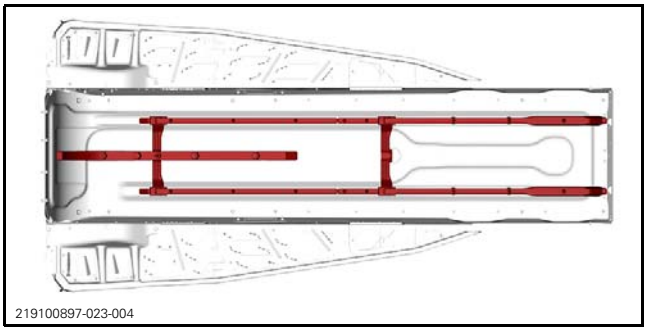
219100897-023-004

## Installing the Tunnel Module

The installation is the reverse of the removal procedure. However, pay attention to the following.

Refer to exploded views or appropriate subsections for proper tightening torque.

Properly refill cooling system. Refer to *COOLING SYSTEM - VEHICLE COMPONENTS* subsection.

# HEAT EXCHANGER

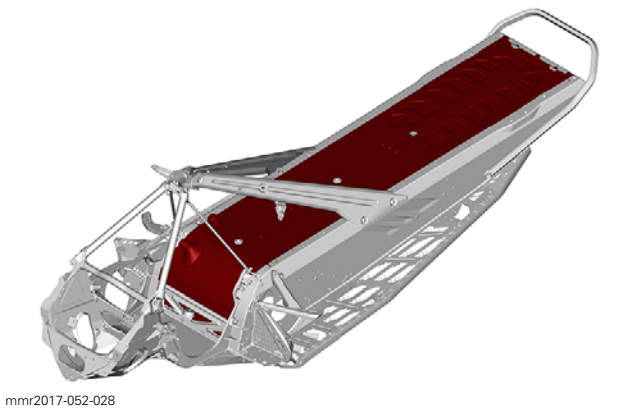
mmr2017-052-028

## Welding the Heat Exchanger

**NOTICE** **Welding aluminum requires special skills, do not try if you're not familiar with the process.**

1. Lower coolant level in the heat exchanger.
2. Clean the leak area with acetone.
3. Use a stainless steel brush to remove all residues.
4. Clean again with acetone.
5. Weld the leak area using a MIG or a TIG welder.
6. Properly refill cooling system. Refer to *COOLING SYSTEM - VEHICLE COMPONENTS* subsection.

## Replacing the Heat Exchanger

1. Remove the tunnel. Refer to the procedure in this subsection.

Do not remove the chaincase.

2. Remove the tunnel rear cap. Refer to *RIVETS* in this subsection.

**NOTICE** **It is highly recommended to support the frame locally around a Hemlock rivet when punching its nail out.**

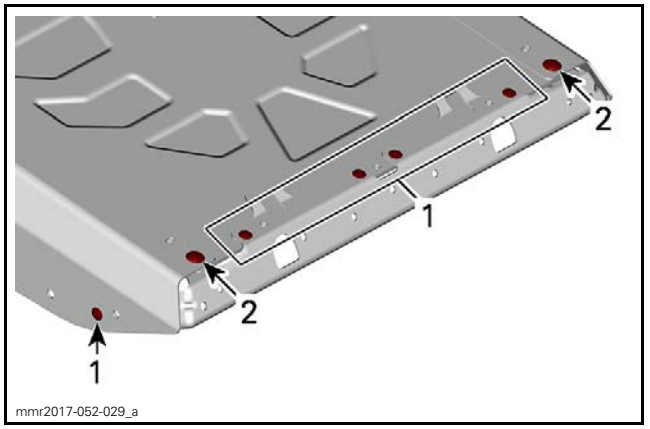

mmr2017-052-029_a

*1. Avibulb rivets (pop rivets)*
*2. Hemlock rivets (pop rivets)*

3. Remove the following rivets.

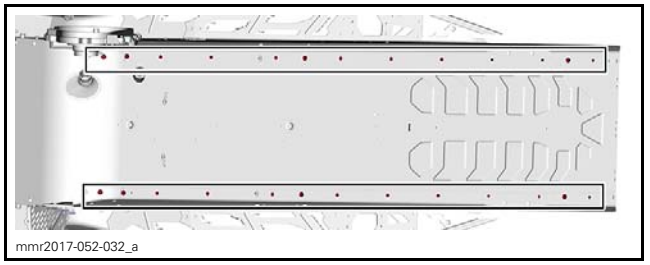
mmr2017-052-032_a

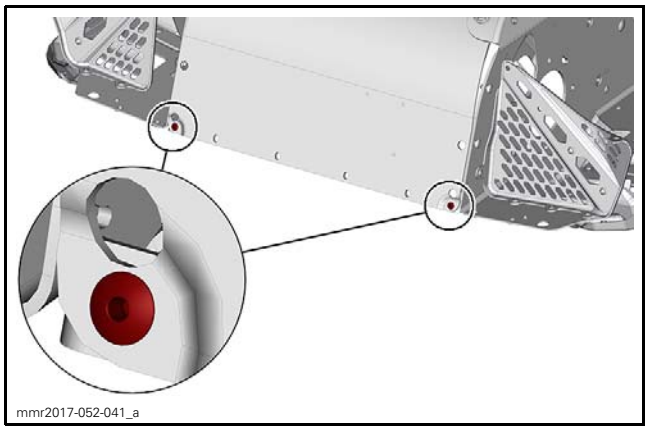


4. Position the new heat exchanger.
5. Install M6 screws and nuts loosely in the Hemlock rivet holes.

NOTE: M6 screws will not fit in self-piercing rivet holes.

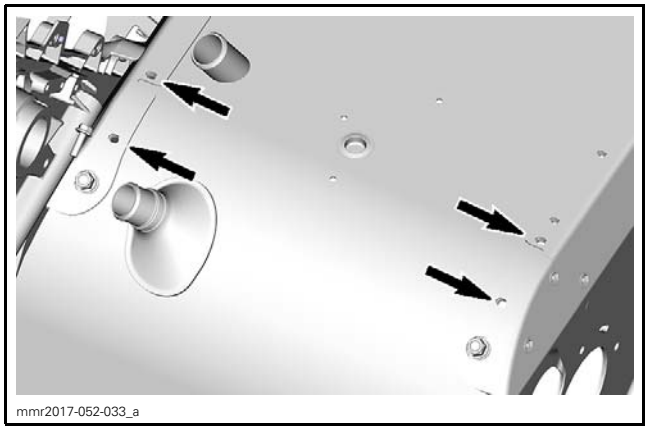


*FRONT RIVET HOLES*

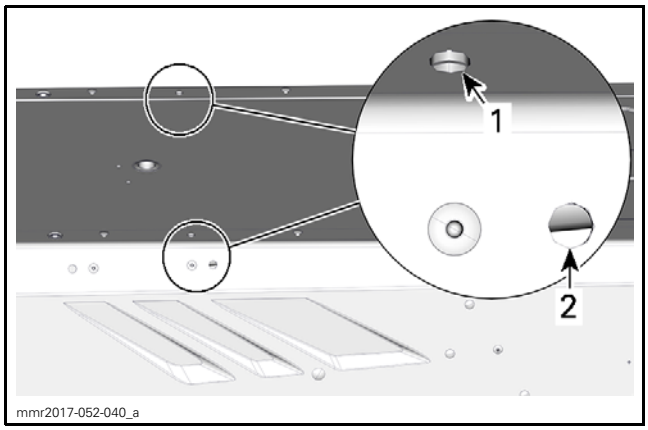


*MID-LENTGH RIVET HOLES*
*1. Install M6 screws and nuts here*
*2. Rear mounting hole for rear frame member*

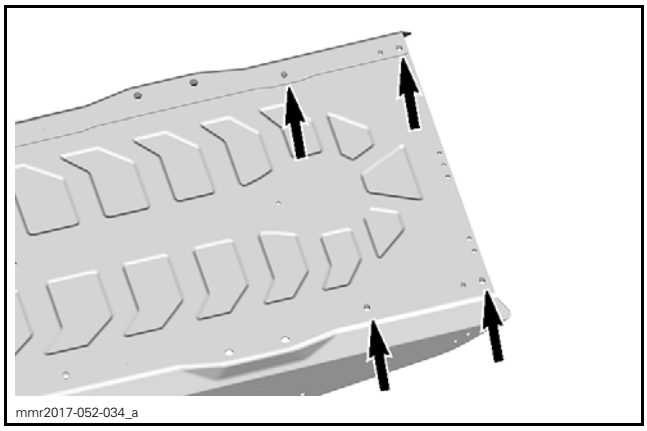


*REAR RIVET HOLES*

6. Install the gauge kit (according to vehicle model) loosely with the appropriate screws, as per the following illustrations.

**NOTICE** **It is imperative to use the gauge kit and to follow each steps of this procedure to avoid drive axle misalignment.**

| MODEL | REQUIRED TOOL | |
|---|---|---|
| 16in Track | RADIATOR INSTALLATION GAUGES (P/N 529 036 422) |  |
| 20in Track | RADIATOR INSTALLATION GAUGES (P/N 529 036 504) |  |

| CYLINDRICAL GAUGES LENGHT | |
|---|---|
| Rear suspension hole gauges | 419.2 mm (16-1/2 in) |
| Tail gauge | 426.4 mm (16-25/32 in) |

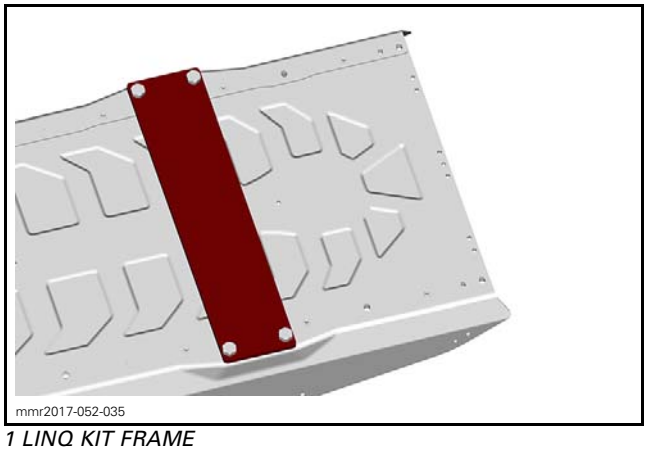


*1 LINQ KIT FRAME*

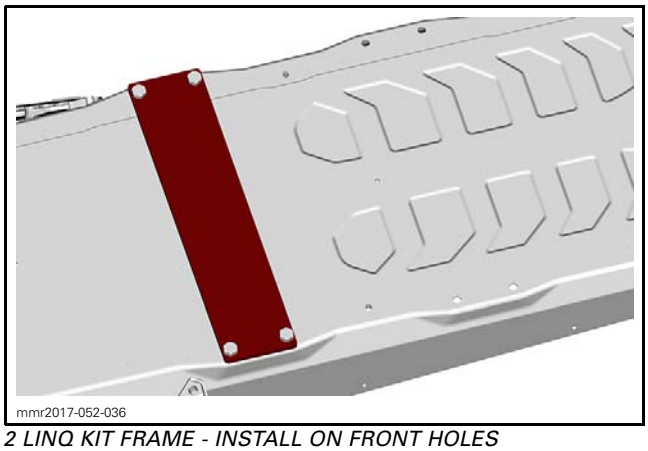


*2 LINQ KIT FRAME - INSTALL ON FRONT HOLES*

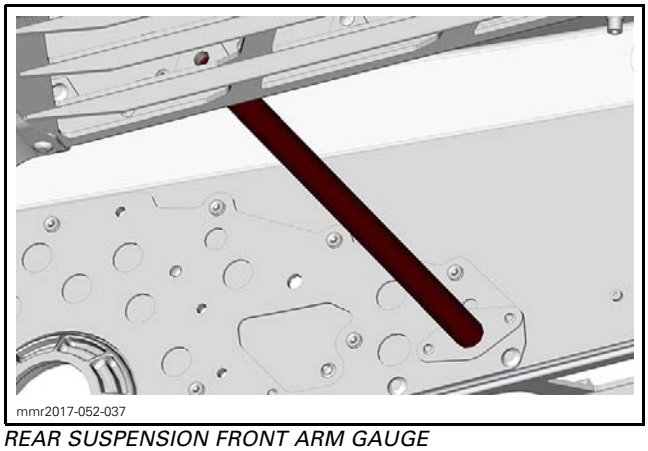


*REAR SUSPENSION FRONT ARM GAUGE*

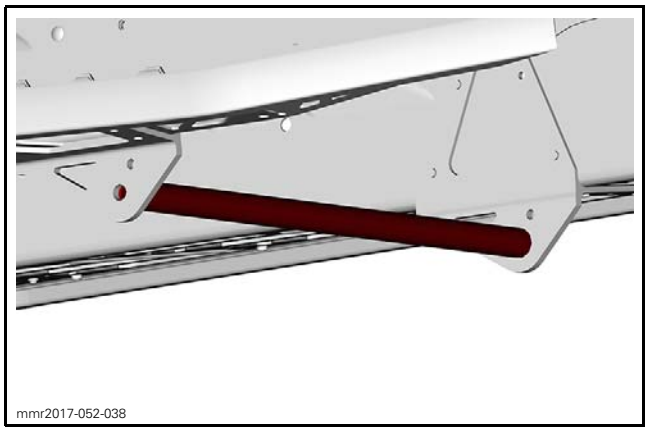


*REAR SUSPENSION REAR ARM GAUGE*

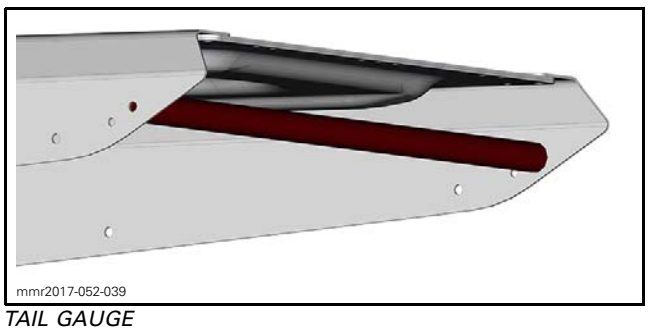


*TAIL GAUGE*

7. Install the drive axle. Refer to *DRIVE AXLE* subsection.

NOTE: It is not required to install the chain and the brake disc.

8. Tighten gauges and M6 screws with standard torque.
9. Enlarge self-piercing rivet holes.

| REQUIRED TOOL |
|---|
| Drill bit 6.35 mm (1/4 in) |

10. Install Hemlock rivets in enlarged holes.

| REQUIRED PARTS | |
|---|---|
| Hemlock rivets | (P/N 293150119) |

11. Install the tunnel rear cap.

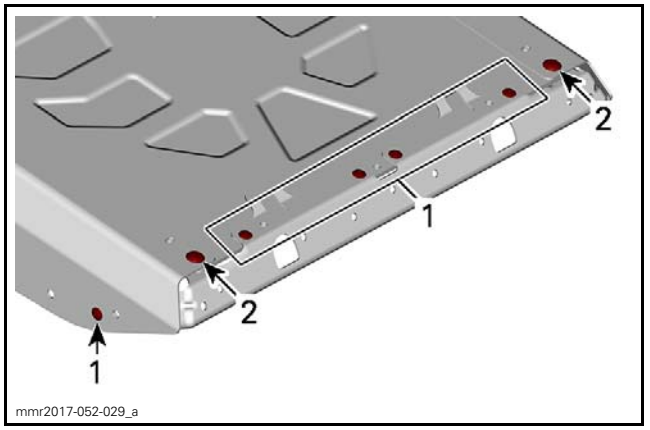


*1. Avibulb 4.76 mm (3/16 in) rivets*
*2. Hemlock 6.4 mm (1/4 in) rivets*

12. Remove the M6 screws and nuts, and install Hemlocks rivets.
13. Remove all gauges and the drive axle.
14. Reassemble the vehicle.

# COUNTERSHAFT BEARING SUPPORT

## Removing the Countershaft Bearing Support

1. Refer to the appropriate subsection and remove:
   - Driven pulley and countershaft
   - LH side bottom pan.
2. Remove the belt guard support.

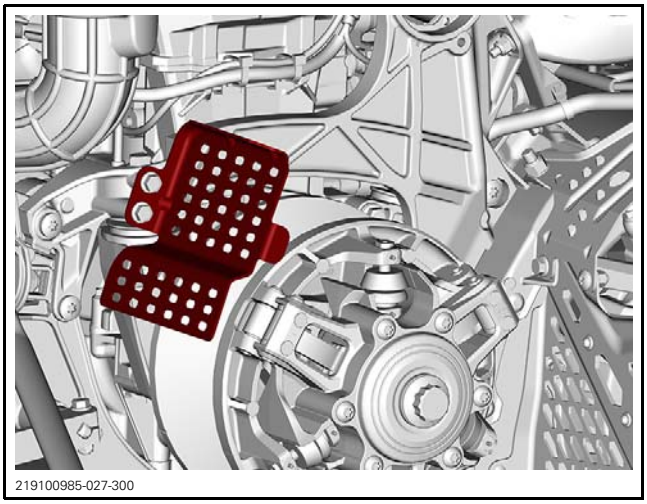
219100985-027-300

3. Insert a pry bar between the engine module and the bottom of the engine to support it during the countershaft bearing support removal.
4. Detach both supports from the top of the countershaft bearing support

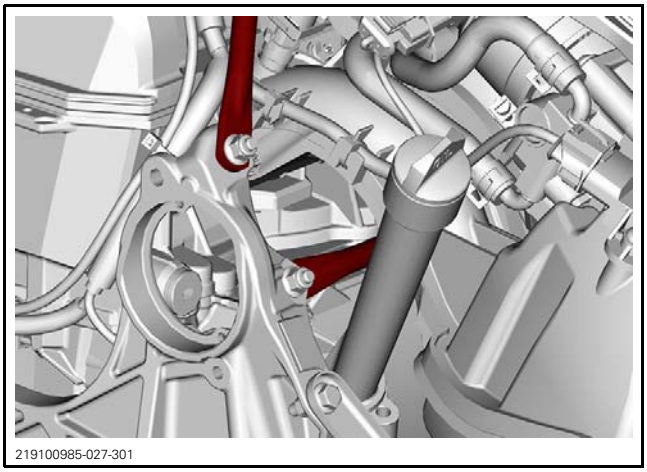
219100985-027-301

5. Detach the top of the support link.

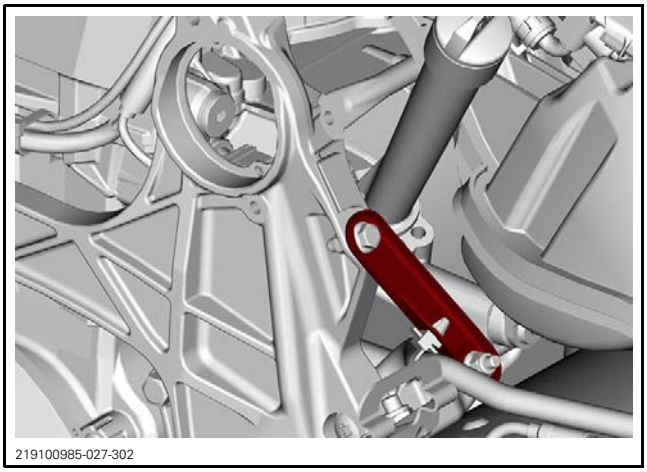
219100985-027-302

6. Remove the front engine support screw.

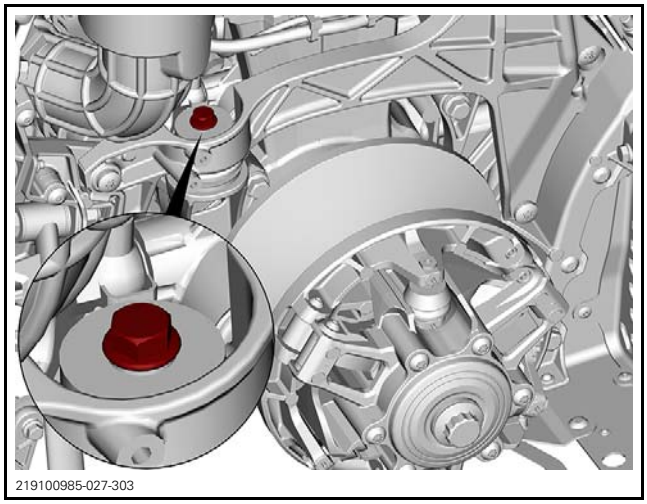
219100985-027-303

7. Remove the countershaft bearing support screws.

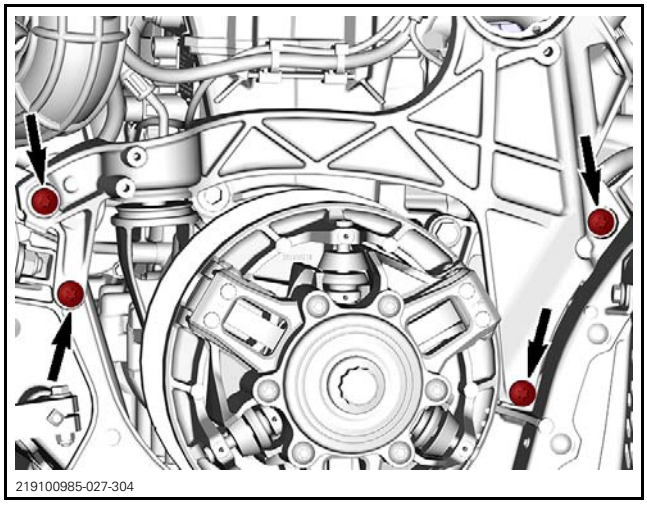
219100985-027-304

8. Remove the rear engine support screw located behind the support.

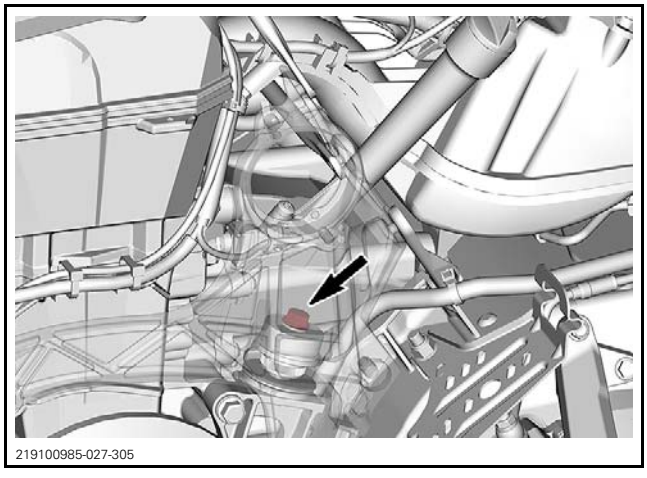
219100985-027-305

9. Remove the countershaft bearing support.

## Installing the Countershaft Bearing Support

The installation is the reverse of the removal procedure. However, pay attention to the following.

| IF INSTALLED ON THE SAME FRAME MEMBER | |
|---|---|
| M8 Hexagonal flange screw (all fasteners) | (P/N 207683044) |
| **IF INSTALLED ON A NEW FRAME MEMBER** | |
| M8 Hexagonal flange self-tapping screw (at rear of bearing support) | (P/N 210283040) |

Refer to exploded views for tightening torque and sequence.

# VEHICLES - EFI

| COOLING SYSTEM | | | |
|---|---|---|---|
| Coolant | Type | Recommended | XPS EXTENDED LIFE PRE-MIXED COOLANT |
| | | Alternative, or if not available | Ethyl glycol and distilled water (50%/50%) or coolant specifically formulated for aluminum engines. |
| | Quantity | MXZ Sport | 6.0 L (6.3 qt (U.S. liq.)) |
| | | Renegade Sport | 6.2 L (6.6 qt (U.S. liq.)) |
| | | Backcountry Sport<br>Tundra Sport | 7.2 L (7.6 qt (U.S. liq.)) |
| | | Expedition Sport<br>Skandic Sport / WT | 7.4 L (7.8 qt (U.S. liq.)) |
| | | Tundra LT | 8.6 L (9.1 qt (U.S. liq.)) |
| Radiator cap opening pressure | | | 110 kPa (16 PSI) |

| LUBRICATION SYSTEM | | |
|---|---|---|
| Oil injection pump type | | Mechanical oil injection pump |
| Injection oil | Type | 2T Synthetic blend oil (semi-synthetic) |
| | Quantity | 3.4 L (3.6 qt (U.S. liq.)) |

| FUEL SYSTEM | | |
|---|---|---|
| Fuel pump | | In-tank electrical |
| Fuel | Type | Premium unleaded gasoline (fuel which may contain up to 10% MAX ethanol |
| | Octane rating | 87 Pump Posted<br>AKI (R+M)/2)<br>92 RON |
| Fuel tank capacity | All except Skandic | 36 L (9.5 U.S. gal.) |
| | Skandic | 42 L (11.1 U.S. gal.) |

Midwest Manuals
Green Manuals
Paperless Manuals
For a Better Tomorrow
www.green-manuals.com
If you bought this manual from any other seller please leave them
NEGATIVE feedback and notify us at bestshopmanuals@gmail.com

| ELECTRICAL SYSTEM | | |
|---|---|---|
| Battery | | 12 V, 18 A•h |
| Headlamp | | 2 x 60/55 W (H-13) |
| Taillight and stoplight | Single | 0.14/2.6 W LED |
| | Double | 2 x 2.6/3.5 W LED |

| ELECTRICAL SYSTEM | | |
|---|---|---|
| Fuses | F1: Battery | 30 A |
| | F2: ECM / Engine / Fuel Pump / Starter | 20 A |
| | F3: Cluster | 15 A |
| | F4: Lights / Accessory | 25 A |
| Relays | RY1: Main | - |
| | RY2: Lights / Accessory | - |

| DRIVE SYSTEM - CHAINCASE | | | |
|---|---|---|---|
| Chaincase oil (if equipped) | Type | Recommended | XPS Synthetic chaincase oil |
| | | Alternative, or if not available | 75W140 gear oil that meets the API GL-5 specification |
| | Quantity | | 350 ml (12 U.S. oz) |
| Chain drive ratio | Expedition Sport | | 21/53 |
| | Backcountry Sport | | 23/51 |
| | MXZ Sport(600R)(1.25" track profile)<br>Renegade Sport | | 23/45 |
| | Skandic Sport<br>Tundra Sport / LT | | 19/53 |
| | Skandic WT | | 21/51 |
| Chain | Pitch | | 9.530 mm (.375 in) |
| | Type | | Silent |
| | Links qty | Skandic WT | 100 |
| | | MXZ Sport<br>Renegade Sport | 108 |
| | | Backcountry Sport<br>Expedition Sport<br>Skandic Sport<br>Tundra Sport / LT | 116 |

| DRIVE SYSTEM - GEARBOX | | | |
|---|---|---|---|
| Gearbox oil | Type | Recommended | XPS Synchromesh Transmission Synthetic Oil |
| | | Alternative, or if not available | 75W140 gear oil that meets the API GL-5 specification |
| | Capacity | | 900 ml (30.4 U.S. oz) |
| Gearbox ratio | | Low | 4.62:1 |
| | | High | 2.57:1 |

| DRIVE SYSTEM - DRIVE AND DRIVEN PULLEYS | | | |
|---|---|---|---|
| Drive pulley | Type | | pDrive LC |
| Drive pulley calibration | Clutch engagement (RPM) | Expedition Sport<br>Skandic<br>Tundra | 2300 ± 100 RPM |
| | | Backcountry Sport<br>MXZ Sport<br>Renegade Sport | 3200 ± 100 RPM |
| Drive pulley calibration | Spring color code | MXZ Sport<br>Renegade Sport | Blue/Blue |
| | | Expedition Sport<br>Skandic<br>Tundra | Yellow/Yellow |
| | | Backcountry Sport | Blue/Yellow |
| | Spring length | Blue/Blue | 108 mm (4.252 in) |
| | | Blue/Yellow | 123 mm (4.843 in) |
| | | Yellow/Yellow | 105.6 mm (4.157 in) |
| Drive pulley calibration | Screw length | | 14 mm (.551 in) |
| | Ramp | Backcountry Sport<br>MXZ Sport<br>Renegade Sport | 886 |
| | | Expedition Sport<br>Skandic<br>Tundra | 887 |
| Driven pulley type | Type | | QRS |
| | Spring color code | Except Backcountry Sport | Green |
| | | Backcountry Sport | Black |
| | Spring length | Green/Green | 98.5 mm (3.878 in) |
| | | Black | 88.8 mm (3.496 in) |
| | Spring preload | | 0 |
| | Cam angle | | 40° - XTI |
| Pulley distance | Z | | Not adjustable<br>20.9 mm (.823 in) |
| | X | | Not adjustable<br>41.1 mm ± 1.8 mm<br>(1.618 in ± .071 in) |
| Offset | Y - X | New | Not adjustable<br>3 mm (.118 in) |
| | | After break-in | Not adjustable<br>2 mm ± .5 mm<br>(.079 in ± .02 in) |
| Drive belt | Width | | 38.3 mm (1.508 in) |
| | Wear limit | | 35.9 mm (1.413 in) |
| Drive sprocket number of teeth | | | 8 |

| DRIVE SYSTEM - TRACK | | | |
|---|---|---|---|
| Track | Width | MXZ Sport<br>Renegade Sport<br>Backcountry Sport | 381 mm (15 in) |
| | | Expedition Sport<br>Tundra Sport / LT | 406.4 mm (16 in) |
| | | Skandic | 500 mm (20 in) |
| | Length | MXZ Sport | 326.9 cm (129 in) |
| | | Expedition Sport | 392.3 cm (154 in) |
| | | Renegade Sport | 348.7 cm (137 in) |
| | | Backcountry Sport<br>Tundra Sport | 370.5 cm (146 in) |
| | | Skandic Sport / WT<br>Tundra LT | 392 cm (154 in) |
| Track | Profile height | MXZ Sport<br>Renegade Sport<br>Skandic Sport | 31.8 mm (1.25 in) OR<br>38 mm (1.5 in) |
| | | Backcountry Sport<br>Tundra Sport | 40.6 mm (1.6 in) |
| | | Expedition Sport<br>Skandic WT<br>Tundra LT | 38.1 mm (1.5 in) |
| Track adjustment | Deflection | Expedition | 4 cm to 5 cm<br>(1.57 in to 1.97 in) |
| | | All other models | 3.2 cm (1.26 in) |
| | Force | Expedition | 7.3 kgf (16 lbf) |
| | | All other models | 6.0 kgf to 8.5 kgf<br>(13 lbf to 19 lbf) |

| BRAKE SYSTEM | | |
|---|---|---|
| Brake | Type | Single 200 mm cross drilled carbon steel disc |
| Brake fluid | Type | DOT 4 |
| | Quantity | 65 ml (2.2 U.S. oz) |
| Caliper | | Fixed twin pistons (2 x 40mm) |
| Brake pad material | | Organic |
| Minimum brake pad thickness (includes backing plate) | | 5 mm (.2 in) |
| Brake lining minimum thickness | | 1 mm (.039 in) |
| Minimum brake disc thickness | | 4.5 mm (.177 in) |
| Maximum brake disc warpage | | 0.25 mm (.01 in) |

| FRONT SUSPENSION | | |
|---|---|---|
| Suspension type | Tundra models<br>Skandic models | LTS |
| | All other models | RAS 3 |
| Suspension maximum travel | MXZ Sport<br>Backcountry Sport<br>Renegade Sport | 220 mm (8.7 in) |
| | Expedition Sport | 210 mm (8.3 in) |
| | All Tundra<br>All Skandic | 150 mm (5.9 in) |
| Shock absorber type | | Motion Control |
| Stabilizer bar type | | Link |

| REAR SUSPENSION | | | |
|---|---|---|---|
| Suspension type | | Expedition Sport<br>Skandic Sport / WT<br>Tundra LT | SC-5U |
| | | MXZ Sport<br>Renegade Sport | SC-5M |
| | | Backcountry Sport<br>Tundra Sport | cMotion |
| Suspension maximum travel<br>Measured at rear arm | | MXZ Sport | 250 mm (9.8 in) |
| | | Backcountry Sport<br><br>Expedition Sport<br>Tundra LT<br>Skandic Sport / WT | 239 mm (9.4 in) |
| | | Renegade Sport<br>Tundra Sport | 245 mm (9.6 in) |
| Shock absorber type | Center | | Motion control |
| | Rear | Renegade Sport<br>Backcountry Sport<br>Expedition Sport<br>Skandic Sport / WT<br>Tundra Sport / LT | HPG |
| | | MXZ Sport | Motion Control |
| Stopper strap standard position | | | 3 |

| STEERING SYSTEM | | |
|---|---|---|
| Handlebar | Except Backcountry Sport | U-shaped with J-Hooks |
| | Backcountry Sport | U-shaped aluminum with J-Hooks |

| STEERING SYSTEM | | |
|---|---|---|
| Riser block height | MXZ Sport<br>Renegade Sport<br>Backcountry Sport | 120 mm (4.7 in) |
| | Expedition Sport<br>Skandic<br>Tundra | 145 mm (5.7 in) |
| Ski type | MXZ Sport<br>Renegade Sport | Pilot 5.7 |
| | Backcountry Sport<br>Expedition Sport<br>Tundra | Pilot DS2 |
| | Skandic | Pilot 7.4 |
| Ski alignment | | 5 mm (.197 in) (toe-out) |

| WEIGHT AND DIMENSIONS | | | |
|---|---|---|---|
| Mass (dry) | 600 EFI | Backcountry Sport | 202 kg (446 lb) |
| | | Expedition Sport | 228 kg (502 lb) |
| | | MXZ Sport | 198 kg (437 lb) |
| | | Renegade Sport | 200 kg (442 lb) |
| | | Skandic Sport | 241 kg (531 lb) |
| | | Skandic WT | 265 kg (583 lb) |
| | | Tundra LT | 223 kg (491 lb) |
| | | Tundra Sport | 220 kg (484 lb) |
| Overall length | | MXZ Sport | 292.5 cm (115 in) |
| | | Renegade Sport | 303.8 cm (119.6 in) |
| | | Backcountry Sport | 317.4 cm (125 in) |
| | | Expedition Sport | 330.9 cm (130.3 in) |
| | | Skandic WT | 322.2 cm (126.9 in) |
| | | Skandic Sport<br>Tundra LT | 325.9 cm (128.3 in) |
| | | Tundra Sport | 311 cm (122.4 in) |
| Overall width | | MXZ Sport<br>Renegade Sport | 121.7 cm (47.9 in) |
| | | Backcountry Sport | 114 cm (44.9 in) to 118 cm (46.5 in) |
| | | Expedition Sport | 114 cm (44.9 in) to 118 cm (46.5 in) |
| | | Skandic | 108.9 cm (42.8 in) |
| | | Tundra | 99.4 cm (39.1 in) |

| WEIGHT AND DIMENSIONS | | |
|---|---|---|
| Overall Height | MXZ Sport<br>Renegade Sport | 126.7 cm (49.9 in) |
| | Backcountry Sport | 128.3 cm (50.5 in) |
| | Expedition Sport | 151.3 cm (59.6 in) |
| | Skandic Sport<br>Tundra Sport | 136.9 cm (53.9 in) |
| | Skandic WT<br>Tundra LT | 151.3 cm (59.6 in) |
| Ski stance | MXZ Sport<br>Renegade Sport | 107.7 cm (42.4 in) |
| | Backcountry Sport<br>Expedition Sport | 97.5 cm (38.4 in) to<br>102 cm (40.2 in) |
| | Skandic | 88.9 cm (35 in) |
| | Tundra | 81.3 cm (32 in) |

| MATERIAL | |
|---|---|
| Frame | Aluminum |
| Plastic parts | See material code from part |

# VEHICLES - ACE, EXCEPT 900 ACE SWT

| COOLING SYSTEM | | | |
|---|---|---|---|
| Coolant | Type | | Ethyl glycol and distilled water (50%/50%) Use BRP EXTENDED LIFE PRE-MIXED COOLANT or coolant specifically formulated for aluminum engines. |
| | Quantity | With radiator | 6.9 L (7.3 qt (U.S. liq.)) |
| | | Without radiator | 5.9 L (6.2 qt (U.S. liq.)) |
| Radiator fan | | | Turn on @ 100°C (212°F) Turn off @ 95°C (203°F) |
| Radiator cap opening pressure | | | 110 kPa (16 PSI) |

| FUEL SYSTEM | | | | |
|---|---|---|---|---|
| Fuel delivery system | | Operating pressure | | 400 kPa ± 20 kPa (58 PSI ± 2.9 PSI) @ 2000 RPM |
| Fuel pump | | Type | | Electrical module in fuel tank |
| Fuel | Fuel with NO ethanol | North America | 600 ACE 900 ACE | 87 (R+M)/2 |
| | | | 900 ACE Turbo | 91 (R+M)/2 |
| | | Outside North America | 600 ACE 900 ACE | 92 RON |
| | | | 900 ACE Turbo | 95 RON |
| | Fuel which may contain up to 10% MAX ethanol | North America | | 91 (R+M)/2 |
| | | Outside North America | | 95 RON |
| Fuel tank capacity | | | | 36 L (9.5 U.S. gal.) |
| Idle speed | | | | 1200 RPM ± 200 (not adjustable) |

| ELECTRICAL SYSTEM | | |
|---|---|---|
| Battery | Expedition Sport<br>All Renegade<br>All Grand Touring | 12 V, 18 A•h |
| | Expedition LE<br>Expedition SE | 12 V, 30 A•h |
| Headlamp | | 2 x 60/55 W (H-13) |
| Taillight and stoplight | | 2.6 W / 139m W LED |

| ELECTRICAL SYSTEM | | |
|---|---|---|
| Fuses<br>– Grand Touring Limited<br>– Renegade Enduro<br>– Expedition LE<br>– Expedition SE | F1: Clock / Start / Relays | 5 A |
| | F2: Headlamps | 20 A |
| | F3: Taillight / Brake / PAC | 10 A |
| | F4: ECM / RFID /O2 Sensor / CAPS | 10 A |
| | F5: Fuel Pump/Starter | 10 A |
| | F6: Fan | 15 A |
| | F7: Accessory | 15 A |
| | F8: Cluster | 15 A |
| | F9: ACS | 15 A |
| | F10: RER | 30 A |
| Fuses<br>– Expedition Sport<br>– Grand Touring Sport<br>– Renegade Adrenaline<br>– Renegade X<br>– Renegade X-RS<br>– Expedition Sport | F1: Start / Relays | 5 A |
| | F2: Accessory | 15 A |
| | F3: Taillight / Brake / PAC | 10 A |
| | F4: ECM / RFID /O2 Sensor / CAPS | 10 A |
| | F7: Fuel Pump | 10 A |
| | F8: Cluster | 15 A |
| | F9: Fan | 15 A |
| | F10: Headlamps | 20 A |
| Relays<br>– Grand Touring Limited<br>– Renegade Enduro<br>– Expedition LE<br>– Expedition SE | RY1 | Main |
| | RY2 | Headlamps |
| | RY3 | Fan |
| | RY4 | Reverse |
| | RY5 | Accessories |
| | RY6 | Lighting |
| Relays<br>– Expedition Sport<br>– Grand Touring Sport<br>– Renegade Adrenaline<br>– Renegade X<br>– Renegade X-RS<br>– Expedition Sport | RY1 | Main |
| | RY2 | Accessories |
| | RY3 | Fan |
| | RY4 | Lighting |

| DRIVE SYSTEM | | | |
|---|---|---|---|
| Chaincase oil (If equipped) | Type | | XPS Synthetic chaincase oil |
| | Quantity | All Renegade<br>All Expedition | 500 ml (16.9 U.S. oz) |
| | | All Grand Touring | 350 ml (12 U.S. oz) |

| DRIVE SYSTEM | | | | |
|---|---|---|---|---|
| Chain drive ratio | | | 600 ACE | 21/51 |
| | | | 900 ACE Expedition LE / SE / SWT All Skandic | 21/45 |
| | | | 900 ACE Expedition Sport Grand Touring Renegade | 24/49 |
| | | | 900 ACE Turbo | 25/45 |
| Chain | | Pitch | | 9.530 mm (.375 in) |
| | | Type | | Silent |
| | | Links qty | Expedition Sport (600 and 900 ACE) | 116 |
| | | | Expedition LE / SE (900 ACE Turbo) | 100 |
| | | | Expedition LE / SE (900 ACE) | 96 |
| | | | 600 ACE | 110 |
| | | | 900 ACE - All other | 110 |
| | | | 900 ACE Turbo - All other | 108 |
| Gearbox oil (if equipped) | | Type | | Synchromesh Transmission Synthetic Oil |
| | | Capacity | | 900 ml (30.4 U.S. oz) |
| Gearbox ratio | | 900 ACE | Low | 4.24:1 |
| | | | High | 2.36:1 |
| | | 900 ACE Turbo | Low | 3.59::1 |
| | | | High | 2.0:1 |
| Drive pulley | Type | All Renegade | 600 ACE | eDrive II LC |
| | | All Expedition All Grand Touring | 600 ACE | eDrive II |
| | | All Grand Touring | 900 ACE | pDrive |
| | | All Grand Touring | 900 ACE Turbo | pDrive |
| | | All Renegade All Expedition | 900 ACE 900 ACE Turbo | pDrive |

| DRIVE SYSTEM | | | |
|---|---|---|---|
| Drive pulley calibration | Clutch engagement | Expedition (900 ACE turbo) | 2000 ± 100 RPM |
| | | All others | 2200 ± 100 RPM |
| | Spring color code | All 600 ACE | Red/Red |
| | | All 900 ACE | Red/Blue |
| | | All 900 ACE Turbo | Red/Yellow |
| | Spring length | Red/Blue | 90.8 mm (3.575 in) |
| | | Red/Red | 124.3 mm (4.894 in) |
| | | Red/Yellow | 96.6 mm (3.803 in) |
| Drive pulley calibration | Ramp | Expedition SE (900 ACE Turbo) Grand Touring Limited (900 ACE Turbo) | 880 |
| | | Expedition SE (900 ACE) | 882 |
| | | Expedition Sport (600 ACE) | 716 |
| | | Grand Touring Sport (600 ACE) Renegade Sport (600 ACE) | 715 |
| | | Expedition Sport (900 ACE) Expedition Sport (900 ACE) Grand Touring Limited (900 ACE) Renegade Adrenaline (900 ACE) Renegade Enduro (900 ACE) | 826 |
| | | Grand Touring Limited (900 ACE Turbo) | 880 |
| | | All Renegade (900 ACE Turbo) | 873 |
| Drive pulley calibration | Clicker position | | No clicker |

| DRIVE SYSTEM | | | | |
|---|---|---|---|---|
| Driven pulley | | Type | 600 ACE<br>900 ACE | QRS-4s |
| | | | 900 ACE Turbo | QRS-4s ventilated |
| | | Spring color code | 600 ACE | Red/Red |
| | | | 900 ACE (except Expedition LE / SE) | Red/Red |
| | | | Expedition LE<br>Expedition SE | Beige/Beige |
| | | | 900 ACE Turbo | Blue |
| | | Spring length | Red/Red | 124.3 mm (4.894 in) |
| | | | Beige/Beige | 135 mm (5.315 in) |
| | | | Blue | 120 mm (4.724 in) |
| | | Cam angle | 600 ACE | 43° ± 2° |
| | | | 900 ACE - Expedition Sport | 40° |
| | | | 900 ACE Expedition LE / SE | 42° |
| | | | 900 ACE - All other | 44°/40° |
| | | | 900 ACE Turbo | 47°/40° |
| Driven pulley | Spring preload | All models except Expedition LE / SE 900 (ACE) | New | 7.3 kgf ± 0.7 kgf<br>(16.1 lbf ± 1.5 lbf) |
| | | | After break-in | 6.6 kgf ± 0.7 kgf<br>(14.6 lbf ± 1.5 lbf) |
| | | Expedition LE / SE 900 (ACE) | New | 7.0 kgf ± 0.7 kgf<br>(15.4 lbf ± 1.5 lbf) |
| | | | After break-in | 6.4 kgf ± 0.7 kgf<br>(14.1 lbf ± 1.5 lbf) |
| Pulley distance | | Z | | Not adjustable<br>21.4 mm (.843 in) |
| | | X | | Not adjustable<br>41.9 mm ± 1.8 mm<br>(1.65 in ± .071 in) |
| Offset | | Y - X | | Not adjustable<br>0 mm to 1.63 mm<br>(0 in to .064 in) |
| Drive belt | | Width | | 38.3 mm (1.508 in) |
| | | Wear limit | | 35.9 mm (1.413 in) |
| Drive sprocket number of teeth | | | Grand Touring Limited | 16 |
| | | | All other | 8 |

| DRIVE SYSTEM | | | |
|---|---|---|---|
| Track | Width | Expedition LE<br>Expedition SE | 50 cm (20 in) |
| | | Expedition Sport | 40.6 cm (16 in) |
| | | All other | 38.1 cm (15 in) |
| | Length | All Expedition | 392.3 cm (154 in) |
| | | All other | 348.7 cm (137 in) |
| | Profile height | All Expedition | 38 mm (1.5 in) |
| | | All other | 31.8 mm (1.25 in) OR<br>40.6 mm (1.6 in) |
| Track adjustment | Deflection | All Expedition | 40 mm to 50 mm<br>(1.57 in to 1.97 in) |
| | | All other | 32 mm (1.26 in) |
| | Force | All Expedition | 7.3 kgf (16 lbf) |
| | | All other | 6.0 kgf to 8.5 kgf<br>(13 lbf to 19 lbf) |

| BRAKE SYSTEM | | |
|---|---|---|
| Brake | Type | Single 200 mm cross drilled carbon steel disc |
| Brake fluid | Type | DOT 4 |
| | Quantity | 65 ml (2.2 U.S. oz) |
| Caliper | | Fixed twin pistons (2 x 40mm) |
| Brake pad material | | Organic |
| Minimum brake pad thickness (includes backing plate) | | 5 mm (.197 in) |
| Minimum brake disc thickness | | 4.5 mm (.177 in) |
| Maximum brake disc warpage | | 0.25 mm (.01 in) |
| Brake lining minimum thickness | | 1 mm (.039 in) |

| FRONT SUSPENSION | | |
|---|---|---|
| Suspension type | | RAS 3 |
| Suspension maximum travel | All Expedition | 210 mm (8.3 in) |
| | Renegade X | 233 mm (9.2 in) |
| | Renegade X-RS | 255 mm (10 in) |
| | All other | 220 mm (8.7 in) |

| FRONT SUSPENSION | | | |
|---|---|---|---|
| Shock absorber type | | All Expedition<br>Grand Touring Sport<br>Renegade Sport | Motion Control |
| | | Renegade X-RS | KYB PRO 36 R |
| | | Grand Touring Limited | HPG |
| | | All other | HPG Plus |
| Stabilizer bar type | | | Link |

| REAR SUSPENSION | | | |
|---|---|---|---|
| Suspension type | | Grand Touring Sport<br>Renegade Sport | SC-5M |
| | | All Expedition | SC-5U |
| | | All Renegade (except Sport)<br>Grand Touring Limited | rMotion |
| Suspension maximum travel | | All Expedition | 239 mm (9.4 in) |
| | | Grand Touring Sport<br>Renegade Sport | 245 mm (9.6 in) |
| | | Grand Touring Limited<br>All Renegade (except Sport) | 270 mm (10.6 in) |
| Shock absorber type | Center | Renegade X | HPG Plus |
| | | All Expedition<br>Grand Touring Sport<br>Renegade Sport | Motion Control |
| | | Renegade X-RS | KYB PRO 40 EA |
| | | All other | HPG |
| | Rear | Grand Touring Limited<br>Renegade Enduro<br>Expedition SE | ACS (Air Controlled Suspension) |
| | | Renegade X | KYB PRO 36 |
| | | Renegade X-RS | KYB PRO 40 EA |
| | | All other | HPG |
| Stroke limiter standard position | | All Expedition<br>Grand Touring Sport | 3 |
| | | Grand Touring Limited | 2 |
| | | All Renegade | 1 |

Midwest Manuals
Green Manuals
Paperless Manuals
For a Better Tomorrow
www.green-manuals.com
If you bought this manual from any other seller please leave them NEGATIVE feedback and notify us at bestshopmanuals@gmail.com

| STEERING SYSTEM | | |
|---|---|---|
| Handlebar | Renegade Sport<br>Renegade Enduro<br>Expedition Sport | Aluminum with J-Hooks |
| | Renegade X<br>Renegade X-RS<br>Renegade Adrenaline | Aluminum with J-Hooks and handguard |
| | All Grand Touring | U-shaped Aluminium |
| | Expedition SE<br>Expedition LE | Aluminum with J-Hooks and low grab handle |
| Riser block height | Grand Touring Sport<br>Renegade Adrenaline<br>Renegade Enduro<br>Renegade Sport | 120 mm (4.7 in) |
| | Grand Touring Limited<br>Renegade X<br>Renegade X-RS<br>Expedition SE | Adjustable - 120 mm (4.7 in) |
| | Expedition LE<br>Expedition Sport | 145 mm (5.7 in) |
| Ski type | Grand Touring Sport (CA/US)<br>Grand Touring Limited | Pilot 5.7 SL |
| | Renegade Enduro<br>Renegade X (with adjustable kit)<br>Renegade X-RS (with adjustable kit) | Pilot TS |
| | Renegade Adrenaline (CA/US)<br>Renegade X<br>Renegade Sport (CA/US)<br>Renegade X-RS (CA/US) | Pilot 5.7 |
| | Expedition LE<br>Expedition SE | Pilot 7.4 |
| | Expedition Sport<br>Renegade Adrenaline (EUR)<br>Renegade X-RS (EUR)<br>Renegade Sport (EUR)<br>Grand Touring Sport (EUR) | Pilot DS2 |
| Ski alignment | | 5 mm (.197 in) (toe-out) |

| WEIGHT AND DIMENSIONS | | |
|---|---|---|
| Mass (dry) | Renegade Adrenaline 900 ACE | 228 kg (503 lb) |
| | Renegade Adrenaline 900 ACE Turbo | 239 kg (527 lb) |
| | Renegade Enduro 900 ACE | 242 kg (534 lb) |
| | Renegade Enduro 900 ACE Turbo | 253 kg (558 lb) |
| | Renegade X (without Quick Adjust Suspension and ski Pilot TS) | 240 kg (529 lb) |
| | Renegade X (with Quick Adjust Suspension and ski Pilot TS) | 248 kg (547 lb) |
| | Renegade X-RS | 244 kg (538 lb) |
| | Renegade Sport | 213 kg (470 lb) |
| | Grand Touring Limited 900 ACE | 227 kg (498 lb) |
| | Grand Touring Limited 900 ACE Turbo | 236 kg (519 lb) |
| | Grand Touring Sport 600 ACE | 265 kg (582 lb) |
| | Grand Touring Sport 900 ACE | 274 kg (602 lb) |
| | Expedition Sport 600 ACE | 241 kg (531 lb) |
| | Expedition Sport 900 ACE | 251 kg (553 lb) |
| | Expedition LE 900 ACE | 288 kg (634 lb) |
| | Expedition LE 900 ACE Turbo | 302 kg (663 lb) |
| | Expedition SE 900 ACE | 301 kg (663 lb) |
| | Expedition SE 900 ACE Turbo | 315 kg (693 lb) |
| Overall length | All except Expedition | 303.8 cm (119.6 in) |
| | Expedition LE<br>Expedition SE | 333.6 cm (131.3 in) |
| | Expedition Sport | 335 cm (131.9 in) |
| Overall width | All except Expedition | 121.7 cm (47.9 in) |
| | All Expedition | 114 cm (44.9 in) to 118 cm (46.5 in) |

| WEIGHT AND DIMENSIONS | | |
|---|---|---|
| Overall height | Renegade Enduro | 133.1 cm (52.4 in) |
| | Renegade X<br>Renegade Adrenaline<br>Renegade Sport | 126.7 cm (49.9 in) |
| | Renegade X-RS | 122.2 cm (48.1 in) |
| | All Grand Touring<br>All Expedition | 140.5 cm (55.3 in) |
| Ski stance | All except Expedition | 107.7 cm (42.4 in) |
| | All Expedition | 97.5 cm (38.4 in) to<br>102 cm (40.2 in) |

| MATERIAL | |
|---|---|
| Frame | Aluminum |
| Side bottom pan, Front bottom pan, gauge support, gauge support cover, side panel, rear console, windshield support, glove box cover and headlamp surrounding | Polypropylene |
| Rear lateral hood, front hood and top side panel | Surlyn |

# VEHICLES - 900 ACE SWT

| COOLING SYSTEM | | | |
|---|---|---|---|
| Coolant | Type | Recommended | XPS EXTENDED LIFE PRE-MIXED COOLANT |
| | | Alternative, or if not available | Ethyl glycol and distilled water (50%/50%) or coolant specifically formulated for aluminum engines. |
| | Quantity | Tundra Sport | 6.7 L (7.1 qt (U.S. liq.)) |
| | | Skandic WT<br>600 ACE<br>Tundra LT | 6.9 L (7.3 qt (U.S. liq.)) |
| | | Skandic WT /<br>SWT 900 ACE<br>Expedition SWT<br>900 ACE | 7.0 L (7.4 qt (U.S. liq.)) |
| | | Expedition SWT<br>900 ACE Turbo | 7.1 L (7.5 qt (U.S. liq.)) |
| Radiator fan | | | Turns on at 100°C (212°F)<br>Turns off at 95°C (203°F) |
| Radiator cap opening pressure | | | 110 kPa (16 PSI) |

| FUEL SYSTEM | | | | |
|---|---|---|---|---|
| Fuel delivery system | | Operating pressure | | 400 kPa ± 20 kPa (58 PSI ± 2.9 PSI) @ 2000 RPM |
| Fuel pump | | Type | | Electrical module in fuel tank |
| Fuel | Fuel with NO ethanol | North America | 600 ACE<br>900 ACE | 87 Pump Posted AKI (R+M)/2 |
| | | Outside North America | 600 ACE<br>900 ACE | 92 RON |
| | | | 900 ACE Turbo | 95 RON |
| | Fuel which may contain up to 10% MAX ethanol | North America | | 91 Pump Posted AKI (R+M)/2 |
| | | Outside North America | | 95 RON |
| Fuel tank capacity | | | Tundra | 36 L (9.5 U.S. gal.) |
| | | | Skandic series<br>Expedition SWT | 42 L (11.1 U.S. gal.) |
| Idle speed | | | | 1200 RPM ± 200 (not adjustable) |

| ELECTRICAL SYSTEM | | |
|---|---|---|
| Battery | Tundra series | 12 V, 18 A•h |
| | Skandic series<br>Expedition SWT | 12 V, 30 A•h |
| Headlamp | | 2 x 60/55 W (H-13) |
| Taillight and stoplight | | 2.6 W / 139m W LED |
| Fuses<br>– Tundra series | FA: Main | 40 A |
| | F1: Start / Relays | 5 A |
| | F2: Accessory | 15 A |
| | F3: Taillight / Brake / PAC | 10 A |
| | F4: ECM / RFID /O2 Sensor / CAPS | 10 A |
| | F7: Fuel Pump | 10 A |
| | F8: Cluster | 15 A |
| | F9: Fan | 15 A |
| | F10: Headlamps | 20 A |
| Fuses<br>– Skandic series<br>– Expedition SWT | FA: Main | 40 A |
| | F1: Clock / Start / Relays | 5 A |
| | F2: Headlamps | 20 A |
| | F3: Taillight / Brake / PAC | 10 A |
| | F4: ECM / RFID /O2 Sensor / CAPS | 10 A |
| | F5: Fuel Pump/Starter | 10 A |
| | F6: Fan | 15 A |
| | F7: Accessory | 15 A |
| | F8: Cluster | 15 A |
| | F9: ACS | 15 A |
| | F10: E-Reverse | 30 A |
| Relays<br>– Tundra series | RY1 | Main |
| | RY2 | Accessories |
| | RY3 | Fan |
| | RY4 | Lighting |
| Relays<br>– Skandic series<br>– Expedition SWT | RY1 | Main |
| | RY2 | Forward |
| | RY3 | Fan |
| | RY4 | Reverse |
| | RY5 | Accessories |
| | RY6 | Lighting |

| DRIVE SYSTEM - CHAINCASE | | | |
|---|---|---|---|
| Chaincase oil (if equipped) | Type | | XPS Synthetic chaincase oil |
| | Quantity | | 350 ml (12 U.S. oz) |
| Chain drive ratio | Skandic WT 900 ACE | | 21/45 |
| | Skandic WT 600 ACE | | 21/49 |
| | Skandic SWT<br>Expedition SWT 900 ACE | | 21/51 |
| | Tundra Sport / LT | | 21/53 |
| | Expedition SWT 900 ACE Turbo | | 25/51 |
| Chain | Pitch | | 9.530 mm (.375 in) |
| | Type | | Silent |
| | Links qty | Skandic WT 900 ACE | 96 |
| | | Skandic WT 600 ACE | 98 |
| | | Skandic SWT<br>Expedition SWT 900 ACE | 100 |
| | | Expedition SWT 900 ACE Turbo | 102 |
| | | Tundra Sport / LT | 116 |

| DRIVE SYSTEM - GEARBOX | | | |
|---|---|---|---|
| Gearbox oil | Type | | XPS Synchromesh Transmission Synthetic Oil |
| | Capacity | | 900 ml (30.4 U.S. oz) |
| Gearbox ratio | 600 ACE | Low | 4.62:1 |
| | | High | 2.57:1 |
| | 900 ACE | Low | 4.24:1 |
| | | High | 2.36:1 |
| | 900 ACE Turbo | Low | 3.59::1 |
| | | High | 2.0:1 |

| DRIVE SYSTEM - DRIVE AND DRIVEN PULLEYS | | | |
|---|---|---|---|
| Drive pulley | Type | 600 ACE | eDrive II LC |
| | | 900 ACE / Turbo | pDrive |
| Drive pulley calibration | Clutch engagement (RPM) | 600 ACE<br>900 ACE | 2200 ± 100 RPM |
| | | 900 ACE Turbo | 2300 ± 100 RPM |

| DRIVE SYSTEM - DRIVE AND DRIVEN PULLEYS | | | | |
|---|---|---|---|---|
| Drive pulley calibration | | Spring color code | Skandic WT 600 ACE Tundra Sport / LT | Red/Red |
| | | | Skandic WT 900 ACE | Red/Blue |
| | | | Skandic SWT Expedition SWT 900 ACE | Red/Yellow |
| | | | Expedition SWT 900 ACE Turbo | Blue/Purple |
| | | Spring length | Red/Blue | 90.8 mm (3.575 in) |
| | | | Red/Red | 124.3 mm (4.894 in) |
| | | | Red/Yellow | 96.6 mm (3.803 in) |
| | | | Blue/Purple | 100.3 mm (3.949 in) |
| Drive pulley calibration | | Screw length | | 14 mm (.551 in) |
| | | Ramp | 600 ACE | 716 |
| | | | 900 ACE | 882 |
| | | | 900 ACE Turbo | 880 |
| Driven pulley | Type | | | QRS |
| | Spring color code | | 600 ACE | Red |
| | | | 900 ACE | Beige |
| | | | 900 ACE Turbo | Blue |
| | Spring length | | Red | 124.3 mm (4.894 in) |
| | | | Beige | 135 mm (5.315 in) |
| | | | Blue | 120 mm (4.724 in) |
| | Spring preload | Red | New | 7.3 kgf ± 0.7 kgf (16.1 lbf ± 1.5 lbf) |
| | | | After break-in | 6.6 kgf ± 0.7 kgf (14.6 lbf ± 1.5 lbf) |
| | | Beige | New | 7.0 kgf ± 0.7 kgf (15.4 lbf ± 1.5 lbf) |
| | | | After break-in | 6.4 kgf ± 0.7 kgf (14.1 lbf ± 1.5 lbf) |
| | | Blue | | NA |
| | Cam angle | | 600 ACE | 41°/45° |
| | | | 900 ACE | 42° |
| | | | 900 ACE Turbo | 47°/40° |
| Pulley distance | | Z | | Not adjustable 21.4 mm (.843 in) |
| | | X | | Not adjustable 41.9 mm ± 1.8 mm (1.65 in ± .071 in) |

| DRIVE SYSTEM - DRIVE AND DRIVEN PULLEYS | | |
|---|---|---|
| Offset | Y - X | Not adjustable<br>0 mm to 1.63 mm<br>(0 in to .064 in) |
| Drive belt | Width | 38.3 mm (1.508 in) |
| | Wear limit | 35.9 mm (1.413 in) |
| Drive sprocket number of teeth | | 8 |

| DRIVE SYSTEM - TRACK | | | |
|---|---|---|---|
| Track | Width | Tundra Sport / LT | 406.4 mm (16 in) |
| | | Skandic WT | 500 mm (20 in) |
| | | Skandic SWT<br>Expedition SWT | 600 mm (24 in) |
| | Length | Tundra Sport | 370.5 cm (146 in) |
| | | Expedition SWT<br>Skandic series<br>Tundra LT | 392 cm (154 in) |
| Track | Profile height | Tundra Sport | 40.6 mm (1.6 in) |
| | | Expedition SWT<br>Skandic series<br>Tundra LT | 38.1 mm (1.5 in) |
| Track adjustment | Deflection | Tundra Sport | 32 mm (1.26 in) |
| | | Expedition SWT<br>Skandic series<br>Tundra LT | 40 mm to 50 mm<br>(1.57 in to 1.97 in) |
| | Force | Tundra Sport | 7.3 kgf (16 lbf) |
| | | Expedition SWT<br>Skandic series<br>Tundra LT | 6.0 kgf to 8.5 kgf<br>(13 lbf to 19 lbf) |

| BRAKE SYSTEM | | |
|---|---|---|
| Brake | Type | Single 200 mm cross drilled carbon steel disc |
| Brake fluid | Type | DOT 4 |
| | Quantity | 65 ml (2.2 U.S. oz) |
| Caliper | | Fixed twin pistons (2 x 40mm) |
| Brake pad material | | Organic |
| Minimum brake pad thickness (includes backing plate) | | 5 mm (.2 in) |
| Brake lining minimum thickness | | 1 mm (.039 in) |
| Minimum brake disc thickness | | 4.5 mm (.177 in) |
| Maximum brake disc warpage | | 0.25 mm (.01 in) |

| FRONT SUSPENSION | | |
|---|---|---|
| Suspension type | Tundra series<br>Skandic series | LTS |
| | Expedition SWT | RAS 3 |
| Suspension maximum travel | Tundra series<br>Skandic series | 150 mm (5.9 in) |
| | Expedition SWT | 210 mm (8.3 in) |
| Shock absorber type | | Motion Control |
| Stabilizer bar type | Expedition SWT | Link |

| REAR SUSPENSION | | |
|---|---|---|
| Suspension type | Expedition SWT<br>Skandic series<br>Tundra LT | SC-5U |
| | Tundra Sport | cMotion |
| Suspension maximum travel<br>Measured at rear arm | Expedition SWT<br>Skandic series<br>Tundra LT | 239 mm (9.4 in) |
| | Tundra Sport | 245 mm (9.6 in) |
| Shock absorber type | Center | Motion control |
| | Rear | HPG |
| Stopper strap standard position | | 3 |

| STEERING SYSTEM | | |
|---|---|---|
| Handlebar | | U-shaped with J-Hooks |
| Riser block height | | 145 mm (5.7 in) |
| Ski type | Tundra series | Pilot DS2 |
| | Skandic series<br>Expedition SWT | Pilot 7.4 |
| Ski alignment | | 5 mm (.197 in) (toe-out) |

| WEIGHT AND DIMENSIONS | | |
|---|---|---|
| Mass (dry) | Expedition SWT 900 ACE | 301 kg (664 lb) |
| | Expedition SWT 900 ACE Turbo | 315 kg (694 lb) |
| | Skandic WT 600 ACE | 276 kg (608 lb) |
| | Skandic WT 900 ACE | 286 kg (631 lb) |
| | Skandic SWT | 298 kg (657 lb) |
| | Tundra LT | 234 kg (516 lb) |
| | Tundra Sport | 233 kg (514 lb) |
| Overall length | Expedition SWT | 325.6 cm (128.2 in) |
| | Skandic series | 322.2 cm (126.9 in) |
| | Tundra LT | 325.9 cm (128.3 in) |
| | Tundra Sport | 311 cm (122.4 in) |

| WEIGHT AND DIMENSIONS | | |
|---|---|---|
| Overall width | Expedition SWT | 120 cm (47.2 in) to 124 cm (48.8 in) |
| | Skandic series | 108.9 cm (42.8 in) |
| | Tundra series | 100.2 cm (39.4 in) |
| Overall Height | Expedition SWT<br>Skandic series<br>Tundra LT | 151.3 cm (59.6 in) |
| | Tundra Sport | 136.9 cm (53.9 in) |
| Ski stance | Expedition SWT | 97.5 cm (38.4 in) to 102 cm (40.2 in) |
| | Skandic series | 88.9 cm (35 in) |
| | Tundra series | 81.3 cm (32 in) |

| MATERIAL | |
|---|---|
| Frame | Aluminum |
| Plastic parts | See material code from part |

# VEHICLES - E-TEC

| COOLING SYSTEM | | | |
|---|---|---|---|
| Coolant | Type | Recommended | XPS EXTENDED LIFE PRE-MIXED COOLANT |
| | | Alternative, or if not available | Ethyl glycol and distilled water (50%/50%) or coolant specifically formulated for aluminum engines. |
| | Quantity | MXZ | 6.2 L (6.6 qt (U.S. liq.)) |
| | | Grand Touring Renegade | 6.5 L (6.9 qt (U.S. liq.)) |
| | | Backcountry 146" Freeride 146" Summit 146" | 7.2 L (7.6 qt (U.S. liq.)) |
| | | Backcountry 154" Freeride 154" Summit 154" | 7.4 L (7.8 qt (U.S. liq.)) |
| | | Freeride 165" Summit 165" | 7.6 L (8 qt (U.S. liq.)) |
| | | Summit 175" | 7.8 L (8.2 qt (U.S. liq.)) |
| | | Expedition LE / SE / SWT / Xtreme Skandic | 8.6 L (9.1 qt (U.S. liq.)) |
| Radiator cap opening pressure | | | 110 kPa (16 PSI) |

| LUBRICATION SYSTEM | | |
|---|---|---|
| Oil injection pump type | | Electronic oil injection pump |
| Injection oil | Type | XPS 2T E-TEC synthetic oil |
| | Quantity | 3.4 L (3.6 qt (U.S. liq.)) |

| FUEL SYSTEM | | | |
|---|---|---|---|
| Fuel pump | | | In-tank electrical |
| Fuel | Type | | Premium unleaded gasoline (fuel which may contain up to 10% MAX ethanol |
| | Octane rating | Inside North America | 91 Pump Posted AKI (R+M)/2) |
| | | Outside North America | 95 (RON) |
| Fuel tank capacity | All models except Expedition and Skandic | | 36 L (9.5 U.S. gal.) |
| | Expedition Skandic | | 42 L (11.1 U.S. gal.) |

| ELECTRICAL SYSTEM | | | |
|---|---|---|---|
| Battery | | Expedition LE / SE / SWT | 12 V, 30 A•h |
| | | Other models | 12 V, 18 A•h |
| Headlamp | | | 2 x 60/55 W (H-13) |
| Taillight and stoplight | | Single | 0.14 / 2.6 W LED |
| | | Double | 2 x 2.6 / 3.5 W LED |
| Fuses | All models except Expedition and Skandic | F1: Start / RER / Clock | 5 A |
| | | F2: Loads | 25 A |
| | | F3: Battery | 30 A |
| | | F4: Accessories | 7.5 A |
| | Expedition Skandic | FA: Battery | 40 A |
| | | F1: Start / RER | 5 A |
| | | F2: Headlamps | 20 A |
| | | F3: Cluster | 15 A |
| | | F4: RFID / Starter | 10 A |
| | | F5: Accessories | 15 A |
| | | F6: Fan | 15 A |
| | | F7: ACS | 15 A |
| | | F8: Taillights / PAC | 15 A |

| DRIVE SYSTEM - CHAINCASE | | | |
|---|---|---|---|
| Chaincase oil (if equipped) | Type | Recommended | XPS Synthetic chaincase oil |
| | | Alternative, or if not available | 75W140 gear oil that meets the API GL-5 specification |
| | Quantity | | 350 ml (12 U.S. oz) |

| DRIVE SYSTEM - CHAINCASE | | |
|---|---|---|
| Chain drive ratio | MXZ (600R) (1.5" track profile) | 21/43 |
| | All Backcountry / X / X-RS (1.6" track profile)<br>Renegade X (1.50" track profile) | 21/45 |
| | Backcountry (600R)<br>Backcountry X / X-RS (2.0" track profile) | 23/51 |
| | Expedition LE / SE<br>MXZ (600R)(1.25" track profile)<br>All Renegade (600R) except Renegade X (1.50" track profile)<br>Renegade X-RS (1.50" track profile)<br>Grand Touring LTD<br>Skandic WT | 23/45 |
| | Expedition SWT<br>Skandic SWT | 23/49 |
| | MXZ X (850) except (1.25" track profile)<br>MXZ X-RS (850) except (1.25" track profile)<br>All Renegade (850) except Renegade X-RS (1.50" track profile) | 25/45 |
| | MXZ TNT (850) / X / X-RS (1.25" track profile) | 27/45 |
| | Expedition Xtreme | 27/49 |
| | Freeride 146"<br>Summit 146"<br>Summit X with Expert Package | 21/49 |
| | Summit SP 154"<br>Freeride 154" | 21/51 |
| | Freeride 165"<br>Summit SP 165" / 175" | 21/53 |

| DRIVE SYSTEM - CHAINCASE | | | |
|---|---|---|---|
| Chain | Pitch | | 9.530 mm (.375 in) |
| | Type | | Silent |
| | Links qty | Expedition LE / SE<br>Skandic WT | 96 |
| | | Expedition<br>SWT / Xtreme<br>Skandic SWT | 100 |
| | | Renegade X (600R)<br>(1.5" track profile) | 106 |
| | | MXZ X / X-RS<br>/ TNT (600R)<br>(1.25" track profile)<br>MXZ X (850)<br>(1.5" track profile)<br>MXZ X-RS (850)<br>Renegade Adrenaline<br>/ X / Enduro (600R)<br>(1.25" track profile)<br>Renegade Adrenaline /<br>X / X-RS / Enduro (850)<br>Grand Touring LTD | 108 |
| | | MXZ X / TNT (850)<br>(1.25" track profile) | 110 |
| | | Backcountry /<br>X / X-RS (850)<br>(1.6" track profile)<br>MXZ X / X-RS (600R)<br>(1.5" track profile) | 112 |
| | | Freeride 146"<br>Summit SP 146" | 114 |
| | | Backcountry (600R)<br>Backcountry X / X-RS<br>(2" track profile)<br>Backcountry X-RS<br>(2.5" track profile)<br>Summit 154"<br>/ 165" / 175"<br>Freeride 154" / 165"<br>Summit SP (600R)<br>(2.5" track profile)<br>Summit SP (600R)<br>(3.0" track profile) | 116 |

| DRIVE SYSTEM - GEARBOX | | | |
|---|---|---|---|
| Gearbox oil | Type | Recommended | XPS Synchromesh<br>Transmission Synthetic Oil |
| | | Alternative, or if not<br>available | 75W140 gear oil that meets<br>the API GL-5 specification |
| | Capacity | | 900 ml (30.4 U.S. oz) |

| DRIVE SYSTEM - GEARBOX | | | |
|---|---|---|---|
| Gearbox ratio | 600R | Low | 3.87:1 |
| | | High | 2.15:1 |
| | 850 | Low | 3.59:1 |
| | | High | 2.0:1 |

| DRIVE SYSTEM - DRIVE AND DRIVEN PULLEYS | | | |
|---|---|---|---|
| Drive pulley | Type | | pDrive |
| Drive pulley calibration | Clutch engagement (RPM) | All models equipped with a 600R E-TEC | 3400 ± 100 RPM |
| | | Renegade Adrenaline 850 Renegade Enduro 850 Renegade X 850 Renegade X-RS | 2900 ± 100 RPM |
| | | Summit 175" (High Altitude Calibration) | 3900 ± 100 RPM |
| | | MXZ TNT 850 E-TEC MXZ X 850 MXZ X-RS 850 | 3200 ± 100 RPM |
| | | Backcountry 850 Backcountry X Backcountry X-RS Summit X with Expert Package (Sea level calibration) | 3300 ± 100 RPM |
| | | Summit X with Expert Package (High altitude calibration) | 3600 ± 100 RPM |
| | | All others | 3800 ± 100 RPM |

| DRIVE SYSTEM - DRIVE AND DRIVEN PULLEYS | | | |
|---|---|---|---|
| Drive pulley calibration | Spring color code | MXZ<br>Renegade series (600R) | Blue/Blue |
| | | Renegade series (850)<br>Expedition LE / SE / SWT<br>Grand Touring LTD<br>Skandic WT / SWT | Yellow/Blue |
| | | Backcountry (600R)<br>Freeride (High Altitude Calibration)<br>Summit 146" / 154" / 165" (High Altitude Calibration) | Blue/Violet |
| | | Backcountry (850)<br>Backcountry X / X-RS<br>Expedition Xtreme<br>Freeride (Sea Level Calibration)<br>Summit 146" / 154" / 165" / 175" (Sea Level Calibration) | Blue/Yellow |
| | | Summit 175" (High Altitude Calibration) | Violet/White |
| | Spring length | Blue/Blue | 99.8 mm (3.929 in) |
| | | Violet/White | 98.5 mm (3.878 in) |
| | | Blue/Yellow | 115.1 mm (4.531 in) |
| | | Blue/Violet | 100.3 mm (3.949 in) |
| | | Yellow/Blue | 90.7 mm (3.571 in) |

| DRIVE SYSTEM - DRIVE AND DRIVEN PULLEYS | | | |
|---|---|---|---|
| Drive pulley calibration | Screw length | | 14 mm (.551 in) |
| | Ramp | Grand Touring LTD | 901 |
| | | Expedition LE / SE / SWT Skandic WT / SWT | 971 |
| | | Expedition Xtreme | 982 |
| | | Backcountry (600R) Summit (600R) (EUR) | 951 |
| | | All MXZ All Renegade | 968 |
| | | Backcountry (850) Backcountry X / X-RS | 990 |
| | | Freeride (High Altitude Calibration) | 965 |
| | | Freeride (Sea Level Calibration) | 990 |
| | | Summit (High Altitude Calibration) | 965 |
| | | Summit (Sea Level Calibration) | 990 |
| Drive pulley calibration | Clicker position | Backcountry / X / X-RS Summit Freeride (Sea Level Calibration) | 4 |
| | | All other models | 3 |

| DRIVE SYSTEM - DRIVE AND DRIVEN PULLEYS | | | |
|---|---|---|---|
| Driven pulley type | Type | | QRS |
| | Spring color code | Grand Touring LTD<br>MXZ<br>Renegade | Green/Green |
| | | Backcountry / X / X-RS<br>Expedition<br>Freeride (Sea level calibration)<br>Summit (Sea level calibration)<br>Skandic WT / SWT | Black |
| | | Freeride (High altitude calibration)<br>Summit (High altitude calibration) | Blue/Blue |
| | Spring length | Blue/Blue | 124.3 mm (4.894 in) |
| | | Green/Green | 98.5 mm (3.878 in) |
| | | Black | 88.8 mm (3.496 in) |
| | Spring preload | | 0 |
| | Cam angle | MXZ (850) | 45°/42° |
| | | MXZ (600R)<br>Renegade (600R)<br>Grand Touring LTD | 44° |
| | | Renegade (850) | 44°/42° |
| | | Backcountry (850)<br>Backcountry X / X-RS<br>Freeride 146"<br>Summit 146" (850) | 42°/38° - XTI |
| | | Expedition Xtreme | 42°/40° - XTI |
| | | Backcountry (600R)<br>Summit (600R) | 46°/42° - XTI |
| | | Freeride 154" / 165"<br>Summit 154" (850)<br>Summit 165" / 175"<br>Expedition LE / SE / SWT<br>Skandic WT / SWT | 40° - XTIs |
| Pulley distance | Z | | Not adjustable<br>20.9 mm (.823 in) |
| | X | | Not adjustable<br>41.1 mm ± 1.8 mm<br>(1.618 in ± .071 in) |
| Offset | Y - X | New | Not adjustable<br>3 mm (.118 in) |
| | | After break-in | Not adjustable<br>2 mm ± .5 mm<br>(.079 in ± .02 in) |

| DRIVE SYSTEM - DRIVE AND DRIVEN PULLEYS | | | |
|---|---|---|---|
| Drive belt | Width | | 38.3 mm (1.508 in) |
| | Wear limit | | 35.9 mm (1.413 in) |
| Drive sprocket number of teeth | | Freeride 154"<br>Freeride 165"<br>Summit 154"<br>Summit 165"<br>Summit 175" | 6 |
| | | All others models | 8 |

| DRIVE SYSTEM - TRACK | | | |
|---|---|---|---|
| Track | Width | All MXZ, Renegade and Backcountry (1.6" track Profile)<br>Grand Touring LTD | 381 mm (15 in) |
| | | Backcountry (2.0" track profile)<br>Freeride<br>Summit | 406 mm (16 in) |
| | | Expedition LE / SE / SWT / Xtreme<br>Skandic WT | 500 mm (20 in) |
| | | Expedition SWT<br>Skandic SWT | 600 mm (24 in) |
| | Length | All MXZ | 326.9 cm (129 in) |
| | | All Expedition<br>All Skandic | 392.3 cm (154 in) |
| | | All Renegade<br>Grand Touring LTD | 348.7 cm (137 in) |
| | | All Backcountry excluding X-RS | 370.5 cm (146 in) |
| | | Backcountry X-RS | 370.8 cm (146 in) OR<br>391.2 cm (154 in) |
| | | Summit | 370.5 cm (146 in) |
| | | | 392 cm (154 in) |
| | | | 419 cm (165 in) |
| | | | 444.5 cm (175 in) |
| | | Freeride | 348.7 cm (137 in) |
| | | | 370.5 cm (146 in) |
| | | | 392 cm (154 in) |
| | | | 419 cm (165 in) |

| DRIVE SYSTEM - TRACK | | | |
|---|---|---|---|
| Track | Profile height | All MXZ<br>All Renegade | 31.8 mm (1.25 in) OR<br>38 mm (1.5 in) |
| | | Backcountry<br>Backcountry X<br>Backcountry X-RS | 40.6 mm (1.6 in) OR 50 mm<br>(2 in) OR 63.5 mm (2.5 in) |
| | | Grand Touring | 31.8 mm (1.25 in) |
| | | Expedition LE / SWT<br>Skandic WT / SWT | 38.1 mm (1.5 in) |
| | | Expedition SE | 38.1 mm (1.5 in)<br>or<br>45.7 mm (1.8 in) |
| | | Expedition Xtreme | 45.7 mm (1.8 in) |
| | | Freeride | 63.5 mm (2.5 in) OR<br>76.2 mm (3 in) |
| | | Summit | 63.5 mm (2.5 in) OR<br>76.2 mm (3 in) |
| Track adjustment | Deflection | Expedition<br>Skandic | 4 cm to 5 cm<br>(1.57 in to 1.97 in) |
| | | All other models | 3.2 cm (1.26 in) |
| | Force | Expedition<br>Skandic | 7.3 kgf (16 lbf) |
| | | All other models | 6.0 kgf to 8.5 kgf<br>(13 lbf to 19 lbf) |

| BRAKE SYSTEM | | | |
|---|---|---|---|
| Brake | Type | | Single 200 mm cross drilled carbon steel disc |
| Brake fluid | Type | | DOT 4 |
| | Quantity | | 65 ml (2.2 U.S. oz) |
| Caliper | | | Fixed twin pistons (2 x 40mm) |
| Brake pad material | | Backcountry<br>Expedition<br>MXZ TNT<br>Renegade Adrenaline<br>Renegade Enduro<br>Skandic | Organic |
| | | Backcountry X / X-RS<br>Freeride<br>MXZ X / X-RS<br>Renegade X / X-RS<br>Summit | Ferrit |
| Minimum brake pad thickness (includes backing plate) | | | 5 mm (.2 in) |
| Brake lining minimum thickness | | | 1 mm (.039 in) |
| Minimum brake disc thickness | | | 4.5 mm (.177 in) |
| Maximum brake disc warpage | | | 0.25 mm (.01 in) |

| FRONT SUSPENSION | | |
|---|---|---|
| Suspension type | Skandic | LTS |
| | All other models | RAS 3 |
| Suspension maximum travel | MXZ X<br>Renegade X | 233 mm (9.2 in) |
| | MXZ TNT<br>Renegade Adrenaline<br>Backcountry<br>Backcountry X<br>Backcountry X-RS<br>Renegade Enduro<br>Grand Touring LTD<br>Freeride 146" | 220 mm (8.7 in) |
| | Expedition LE / SE / SWT / Xtreme | 210 mm (8.3 in) |
| | Freeride 154"<br>Freeride 165"<br>All Summit | 215 mm (8.5 in) |
| | MXZ X-RS<br>Renegade X-RS<br>MXZ 600R | 255 mm (10 in) |
| | Skandic | 150 mm (5.9 in) |
| Shock absorber type | MXZ X-RS<br>Renegade X-RS<br>Backcountry X-RS<br>All Freeride | KYB PRO 36 R EA |
| | Expedition SE<br>Grand Touring<br>Summit SP | HPG |
| | MXZ (except X-RS)<br>Renegade (except X-RS)<br>Backcountry (except X-RS)<br>Summit X<br>Expedition Xtreme | HPG Plus |
| | Summit Expert | HPG Plus Kashima coated |
| | Expedition LE / SWT<br>Skandic | Motion Control |
| Stabilizer bar type | | Link |

| REAR SUSPENSION | | |
|---|---|---|
| Suspension type | All Expedition<br>All Skandic | SC-5U |
| | All MXZ<br>All Renegade<br>Grand Touring LTD | rMotion |
| | All Backcountry | cMotion |
| | All Summit<br>All Freeride | tMotion |

| REAR SUSPENSION | | | |
|---|---|---|---|
| Suspension maximum travel<br>Measured at rear arm | | MXZ | 272 mm (10.7 in) |
| | | Renegade<br>Grand Touring LTD | 270 mm (10.6 in) |
| | | Backcountry<br>All Summit (except 175")<br>All Freeride<br>All Expedition<br>All Skandic | 239 mm (9.4 in) |
| | | Summit 175" | 242 mm (9.5 in) |
| Shock absorber type | Center | MXZ TNT<br>MXZ X<br>Renegade X<br>Backcountry X<br>Summit X<br>Expedition Xtreme | HPG Plus |
| | | Expedition SE<br>Renegade Adrenaline<br>Renegade Enduro<br>Backcountry<br>Grand Touring LTD<br>Summit SP | HPG |
| | | MXZ X-RS<br>Renegade X-RS<br>Backcountry X-RS<br>All Freeride | KYB PRO 40 EA |
| | | Expedition LE / SWT<br>All Skandic | Motion control |
| | Rear | MXZ TNT<br>Summit X | HPG Plus |
| | | MXZ X<br>Renegade X<br>Renegade Backcountry X<br>Expedition Xtreme<br>Summit X with Expert Package | KYB PRO 36 EA |
| | | Renegade Adrenaline<br>Renegade Backcountry<br>Summit SP<br>Expedition LE / SWT<br>All Skandic | HPG |
| | | MXZ X-RS<br>Renegade X-RS<br>Backcountry X-RS<br>All Freeride | KYB PRO 40 EA |
| | | Renegade Enduro<br>Expedition SE<br>Grand Touring LTD | ACS (Air Controlled Suspension) |

| REAR SUSPENSION | | |
|---|---|---|
| Stroke limiter standard position | Backcountry / X / X-RS<br>Freeride<br>Summit (except 175") | 3 |
| | Summit 175" | 2 |
| | MXZ<br>Renegade | 1 |

| STEERING SYSTEM | | |
|---|---|---|
| Handlebar | Grand Touring LTD | Aluminum U-shaped |
| | All Except Grand Touring | Aluminum U-shaped with J-Hooks |
| Riser block height | MXZ TNT<br>Renegade Adrenaline<br>Renegade Enduro<br>Backcountry / X / X-RS<br>Summit Expert | 120 mm (4.7 in) |
| | Expedition SE<br>MXZ X / X-RS<br>Renegade X / X-RS<br>Grand Touring LTD | Adjustable - 120 mm (4.7 in) |
| | Expedition LE / SWT / Xtreme<br>All Skandic | 145 mm (5.7 in) |
| | All Freeride<br>All Summit (except Expert) | 165 mm (6.5 in) |
| Ski type | MXZ TNT<br>Renegade Adrenaline | Pilot 5.7 |
| | Grand Touring LTD | Pilot 5.7 SL |
| | Renegade Enduro | Pilot TS |
| | MXZ X<br>MXZ X-RS<br>Renegade X<br>Renegade X-RS | Pilot 5.7<br>Pilot TX (optional) |
| | All Backcountry<br>Expedition Xtreme | Pilot DS2 |
| | All Freeride<br>All Summit | Pilot DS3 |
| | Expedition LE / SE / SWT<br>All Skandic | Pilot 7.4 |
| Ski alignment | | 5 mm (.197 in) (toe-out) |

| WEIGHT AND DIMENSIONS | | | |
|---|---|---|---|
| Mass (dry) | 600R | MXZ TNT | 212 kg (467 lb) |
| | | MXZ X (with Quick Adjust Suspension and ski Pilot TX) | 223 kg (492 lb) |
| | | MXZ X (without Quick Adjust Suspension and ski Pilot TX) | 216 kg (476 lb) |
| | | MXZ X-RS (without Quick Adjust Suspension and ski Pilot TX) | 221 kg (487 lb) |
| | | MXZ X-RS (with Quick Adjust Suspension and ski Pilot TX) | 228 kg (503 lb) |
| | | MXZ X-RS (with Quick Adjust Suspension and ski Pilot 5.7) | 224 kg (494 lb) |
| | | Backcountry | 214 kg (471 lb) |
| | | Renegade X (without Quick Adjust Suspension and ski Pilot TX) | 216 kg (475 lb) |
| | | Renegade X (with Quick Adjust Suspension and ski Pilot TX) | 225 kg (496 lb) |
| | | Renegade Enduro | 231 kg (508 lb) |
| | | Summit SP 146" | 213 kg (470 lb) |
| | | Summit SP 154" (electric start) | 210 kg (463 lb) |
| | | Summit SP 154" (SHOT and manual start) | 202 kg (445 lb) |
| | | Renegade Adrenaline | 217 kg (478 lb) |
| | | Grand Touring LTD | 252 kg (554 lb) |
| | | Expedition LE | 280 kg (616 lb) |
| | | Expedition SE / SWT | 290 kg (639.3 lb) |
| | | Skandic WT | 275 kg (606.3 lb) |
| | | Skandic SWT | 287 kg (632.7 lb) |

| WEIGHT AND DIMENSIONS | | | |
|---|---|---|---|
| Mass (dry) | 850 | Expedition Xtreme | 271 kg (595 lb) |
| | | MXZ TNT | 215 kg (474 lb) |
| | | MXZ X (with Quick Adjust Suspension and ski Pilot TX) | 226 kg (498 lb) |
| | | MXZ X (without Quick Adjust Suspension and ski Pilot TX) | 219 kg (483 lb) |
| | | MXZ X-RS (without Quick Adjust Suspension and ski Pilot TX) | 225 kg (496 lb) |
| | | MXZ X-RS (with Quick Adjust Suspension and ski Pilot TX) | 232 kg (511 lb) |
| | | MXZ X-RS (with Quick Adjust Suspension and ski Pilot 5.7) | 227 kg (500 lb) |
| | | Renegade Adrenaline | 221 kg (487 lb) |
| | | Renegade Enduro | 234 kg (516 lb) |
| | | Renegade X (without Quick Adjust Suspension and ski Pilot TX) | 221 kg (487 lb) |
| | | Renegade X (with Quick Adjust Suspension and ski Pilot TX) | 228 kg (503 lb) |

| WEIGHT AND DIMENSIONS | | | |
|---|---|---|---|
| Mass (dry) | 850 | Renegade X-RS (without Quick Adjust Suspension and ski Pilot TX) | 227 kg (500 lb) |
| | | Renegade X-RS (with Quick Adjust Suspension and ski Pilot TX) | 234 kg (516 lb) |
| | | Renegade X-RS (with Quick Adjust Suspension and ski Pilot 5.7) | 237 kg (522 lb) |
| | | Backcountry | 217 kg (478 lb) |
| | | Backcountry X (electric starter) | 218 kg (481 lb) |
| | | Backcountry X (SHOT starter) | 210 kg (463 lb) |
| | | Backcountry X-RS (electric starter) 146" | 224 kg (494 lb) |
| | | Backcountry X-RS (SHOT starter) 146" | 216 kg (476 lb) |
| | | Backcountry X-RS (electric starter) 154" | 230 kg (507 lb) |
| | | Backcountry X-RS (SHOT starter) 154" | 221 kg (487 lb) |
| | | Freeride 146" (SHOT and manual start) | 214 kg (472 lb) |
| | | Freeride 146" (electric starter) | 222 kg (489 lb) |
| | | Freeride 154" (SHOT and manual start) | 209 kg (460.8 lb) |
| | | Freeride 154" (electric starter) | 218 kg (481 lb) |
| | | Freeride 165" (SHOT and manual start) | 212 kg (467 lb) |
| | | Freeride 165" (electric starter) | 221 kg (487 lb) |
| | | Summit SP 146" (SHOT and manual start) | 207 kg (456 lb) |
| | | Summit SP 146" (electric starter) | 216 kg (476 lb) |

| WEIGHT AND DIMENSIONS | | | |
|---|---|---|---|
| Mass (dry) | 850 | Summit SP 154" (SHOT and manual start) | 205 kg (452 lb) |
| | | Summit SP 154" (electric starter) | 213 kg (470 lb) |
| | | Summit SP 165" (SHOT and manual start) | 209 kg (461 lb) |
| | | Summit SP 165" (electric starter) | 218 kg (481 lb) |
| | | Summit SP 175" (SHOT starter) | 210 kg (463 lb) |
| | | Summit SP 175" (electric starter) | 223 kg (492 lb) |
| | | Summit X 154" (SHOT and manual start) | 205 kg (452 lb) |
| | | Summit X 154" (electric starter) | 213 kg (470 lb) |
| | | Summit X 165" (SHOT and manual start) | 207 kg (456 lb) |
| | | Summit X 165" (electric starter) | 216 kg (476 lb) |
| | | Summit X 175" (SHOT and manual start) | 210 kg (463 lb) |
| | | Summit X 175" (electric starter) | 218 kg (481 lb) |
| | | Summit X with Expert Package 154" | 200 kg (440 lb) |
| | | Summit X with Expert Package 165" | 203 kg (448 lb) |
| Overall length | | All MXZ | 292.5 cm (115 in) |
| | | All Renegade<br>Grand Touring LTD | 303.8 cm (119.6 in) |
| | | Backcountry 146"<br>Freeride 146"<br>Summit 146" | 311.0 cm (122.4 in) |
| | | Backcountry X-RS (154 in)<br>Freeride 154"<br>Summit 154" | 331.2 cm (130.4 in) |
| | | Freeride 165"<br>Summit 165" | 344.5 cm (135.6 in) |
| | | Summit 175" | 350.3 cm (137.9 in) |
| | | All Expedition | 325.6 cm (128.2 in) |
| | | All Skandic | 322.2 cm (126.9 in) |

| WEIGHT AND DIMENSIONS | | |
|---|---|---|
| Overall width | All MXZ<br>All Renegade<br>Grand Touring LTD | 121.7 cm (47.9 in) |
| | All Backcountry<br>Expedition Xtreme | 114 cm (44.9 in) to<br>118 cm (46.5 in) |
| | All Freeride<br>All Summit | 108 cm to 111 cm<br>(42.5 in to 43.7 in) |
| | Expedition LE / SE / SWT | 120 cm (47.2 in) to<br>124 cm (48.8 in) |
| | All Skandic | 108.9 cm to 111 cm<br>(42.9 in to 43.7 in) |
| Overall Height | MXZ TNT<br>MXZ X<br>Renegade Adrenaline<br>Renegade X | 126.7 cm (49.9 in) |
| | Renegade Enduro | 133.1 cm (52.4 in) |
| | MXZ X-RS<br>Renegade X-RS | 122.2 cm (48.1 in) |
| | Backcountry X-RS | 122.9 cm (48.4 in) |
| | Grand Touring LTD | 140.5 cm (55.3 in) |
| | Backcountry / X | 127.4 cm (50.2 in) |
| | All Freeride | 136.8 cm (53.9 in) |
| | Summit SP<br>Summit X | 138.6 cm (54.6 in) |
| | Summit X with Expert Package | 129.2 cm (50.9 in) |
| | Expedition Xtreme | 128 cm (50.4 in) |
| | Expedition LE / SE / SWT<br>All Skandic | 151.3 cm (59.6 in) |
| Ski stance | All MXZ<br>All Renegade<br>Grand Touring LTD | 107.7 cm (42.4 in) |
| | All Backcountry<br>All Expedition | 97.5 cm (38.4 in) to<br>102 cm (40.2 in) |
| | All Freeride<br>All Summit | 91 cm to 95.5 cm<br>(35.8 in to 37.6 in) |
| | All Skandic | 88.9 cm (35 in) |

| MATERIAL | |
|---|---|
| Frame | Aluminum |
| Side bottom pan, Front bottom pan, gauge support, gauge support cover, side panel, rear console, windshield support, glove box cover and headlamp surrounding | Polypropylene |
| Rear lateral hood, front hood and top side panel | Surlyn |

# WIRING DIAGRAM INFORMATION

## GENERAL

### WIRING DIAGRAM LOCATION

Wiring diagrams are found in the *WIRING DIAGRAM BOOKLET*.

### WIRING DIAGRAM WITH COLORED LINES

The wiring diagram on the *KNOWLEDGE CENTER* is in color.

#### Color Definition

NOTE: To find the color of the wire on the vehicle skip to *WIRE COLORS AND SIZES* in this subsection.

The following colors refer to the color of the line drawn in the wiring diagram.

| LINE COLOR | LINE TYPE | FUNCTION | DEFINITION |
|---|---|---|---|
| Red | Thick | Unswitched 12 V | Hot at all times |
| | Thin | 3.3 and 5 V | Sensor reference voltage |
| Orange | Thick | 55 - 60 V | High voltage |
| Blue | Thin | Analog signal | Variable voltage |
| Cyan | Thin | Digital signal | Pulsed or constant digital (on/off) |
| Pink | Thick | 12V switched | Condition must be met to activate circuit |
| Green | Thin dotted | Communication | Data communication between modules using a protocol (CAN, LIN, & other) |
| Brown | Thick | Power control | Controls a circuit by providing an on/off control to activate the circuit |
| Yellow | Thick | AC Volts | Alternative current exiting the magneto |
| Black | Thick | Permanent ground | A ground that is in permanent contact |
| | Thin | Module (analog/digital) ground | A ground that is controlled by a module |

### WIRING DIAGRAM CODES

The wiring diagrams use the following codes.

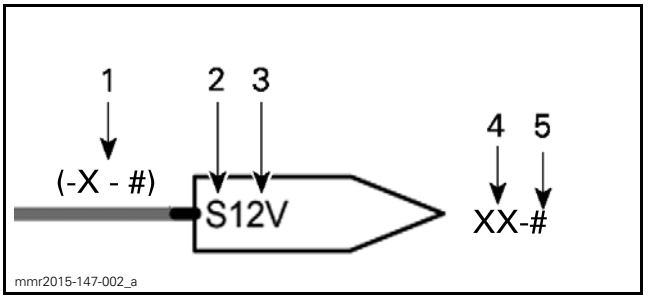


1. *Wiring diagram index*
2. *Power condition*
3. *Voltage of a powered circuit*
4. *Connector code*
5. *Connector pin*

## Wiring Diagram Index

The wiring diagram is separated by rows (letters) and columns (numbers).

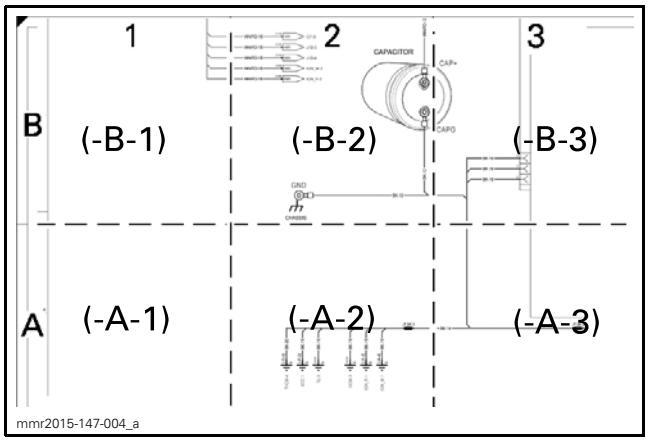


*WIRING DIAGRAM INDEX*

## Power Condition (12V Circuits Only)

The wiring diagram indicates when a circuit is powered:

– S: Switched. Certain conditions must be met;
– U: Unswitched (hot at all times).

## Voltage of Powered Circuit

Voltage references are approximate for a powered circuit in good condition.

| INDICATED VOLTAGE | APPROXIMATION |
|---|---|
| 12V | Battery voltage |
| 5V | Regulated 4.95 - 5V |
| 60V | Regulated 55 - 60V |

## Connector Code

The wire connects to the indicated connector. See image at the beginning of this subsection.

## Connector Pin

The wire is the indicated pin in the connector.

NOTE: Could be identified by either a number or by a letter depending on the type of connector used.

# FOLLOWING A CIRCUIT

To follow a circuit, search the in section of the wiring diagram shown in the wiring diagram index.

In this example, the 60V comes **from** JT WH/RD in section (-B-2).

NOTE: The arrow indicates the direction of the power in the circuit.

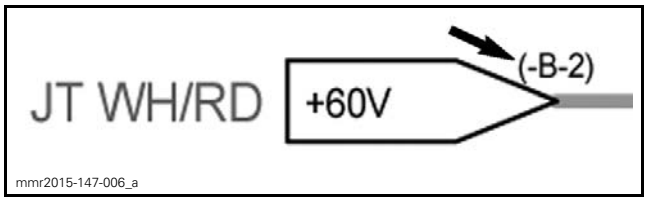


*FROM JT WH/RD (-B-2)*

In following example, the 60V goes **to** the IGN_M connector pin 3 in section (-B-4).

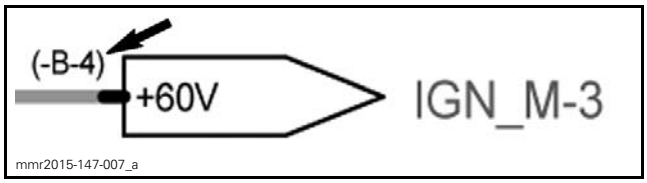


*TO ING_M-3 (-B-4)*

# WIRE COLORS AND SIZES

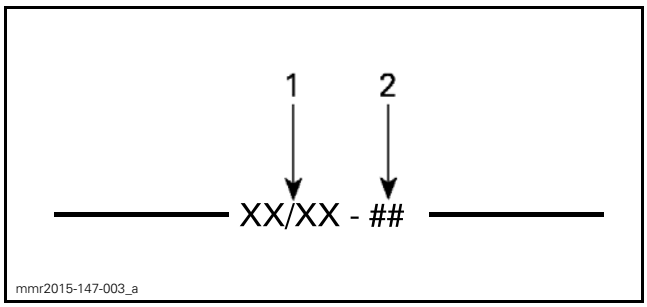


1. *Wire color*
2. *Wire gauge (AWG)*

The first color of a wire is the main color, second color is the stripe.

Example: YE/BK is a YELLOW wire with a BLACK stripe.

| COLOR CODE | | | | | |
|---|---|---|---|---|---|
| BG | — | BEIGE | OG | — | ORANGE |
| BK | — | BLACK | RD | — | RED |
| BU | — | BLUE | VT | — | VIOLET |
| BN | — | BROWN | WH | — | WHITE |
| GN | — | GREEN | YE | — | YELLOW |
| GY | — | GRAY | PK | — | PINK |

LT prefix means a "light" color. E.g: LT GN = Light green.

# SPLICES IN WIRING HARNESS

Splices in wiring harness are indicated on the wiring diagram as follows.

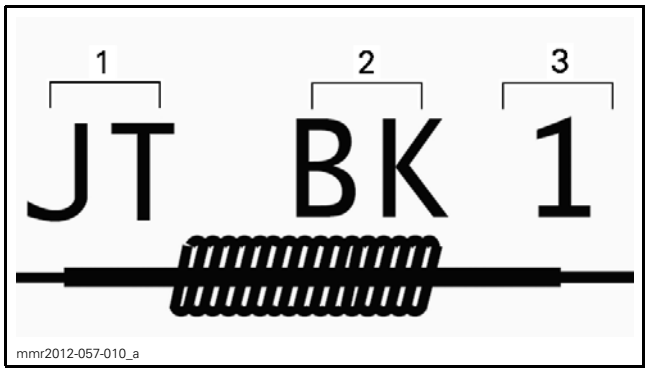


*1. JT: Splice indication*
*2. Spliced wire color*
*3. Splice number on the wire*

Refer to *SPLICE INFORMATION* subsection for more details.

# 2023 RENEGADE SPORT/ ADRENALINE 600 ACE, 900 ACE & TURBO
# GT SPORT & EXPEDITION SPORT, 600 ACE & 900 ACE
# TUNDRA 600 ACE

WITH COOLING FAN (IF EQUIPPED)

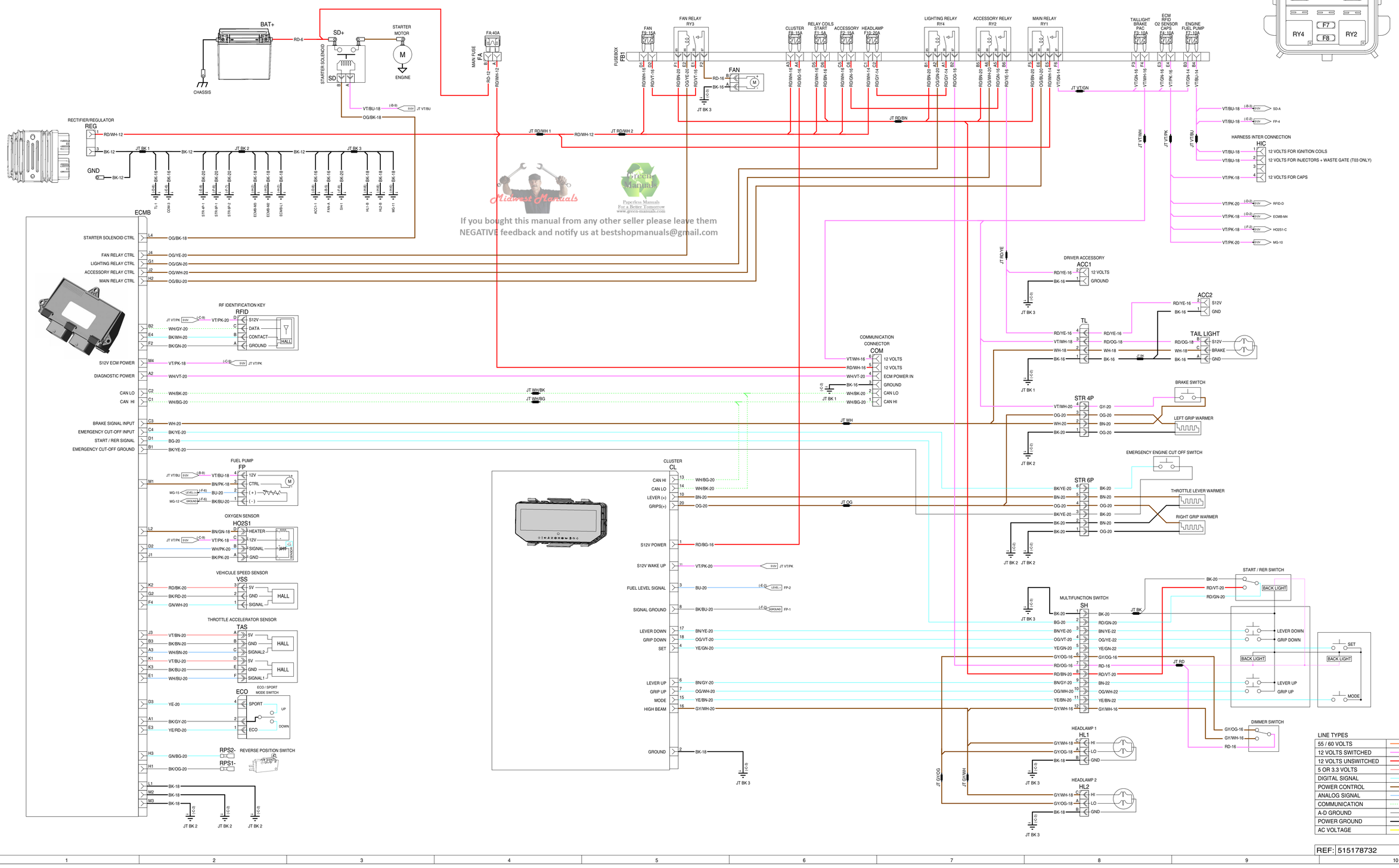


Midwest Manuals
Green Manuals
Paperless Manuals For a Better Tomorrow
www.green-manuals.com
If you bought this manual from any other seller please leave them NEGATIVE feedback and notify us at bestshopmanuals@gmail.com

| LINE TYPES |
|---|
| 55 / 60 VOLTS |
| 12 VOLTS SWITCHED |
| 12 VOLTS UNSWITCHED |
| 5 OR 3.3 VOLTS |
| DIGITAL SIGNAL |
| POWER CONTROL |
| ANALOG SIGNAL |
| COMMUNICATION |
| A-D GROUND |
| POWER GROUND |
| AC VOLTAGE |

# 2023 EXPEDITION LE/ SE 900 ACE & SKANDIC LE/ SE 600 & 900 ACE

AIR CONTROLLED SUSPENSION (EXPEDITION ONLY)
ELECTRO-MECHANICAL REVERSE
COOLING FAN

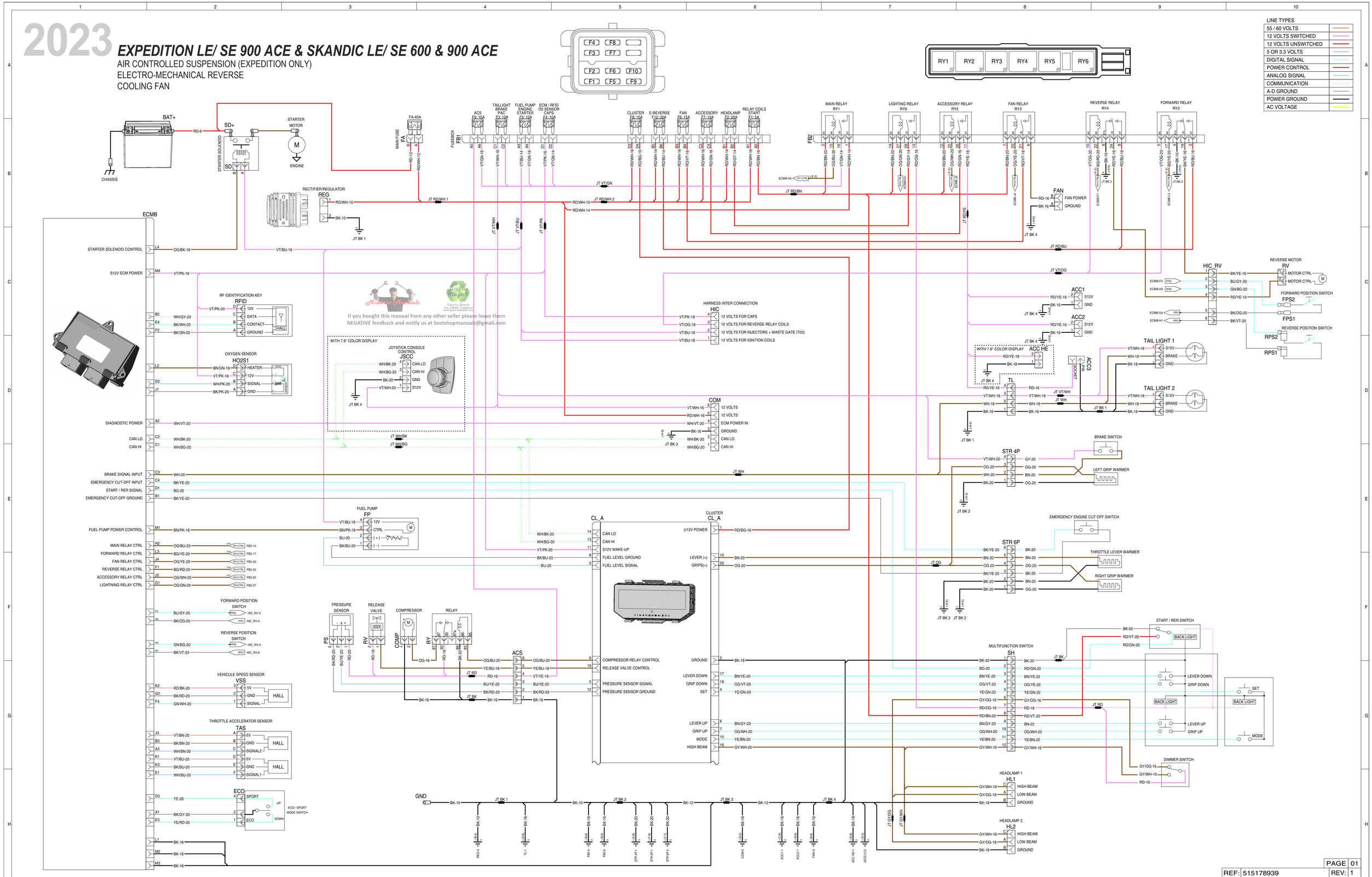


If you bought this manual from any other seller please leave them NEGATIVE feedback and notify us at bestshopmanuals@gmail.com

# 2023 EXPEDITION LE/ SE 900 ACE TURBO & 900 ACE TURBO R

COOLING FAN
ELECTRO-MECHANICAL REVERSE
ACS (EXPEDITION SE ONLY)

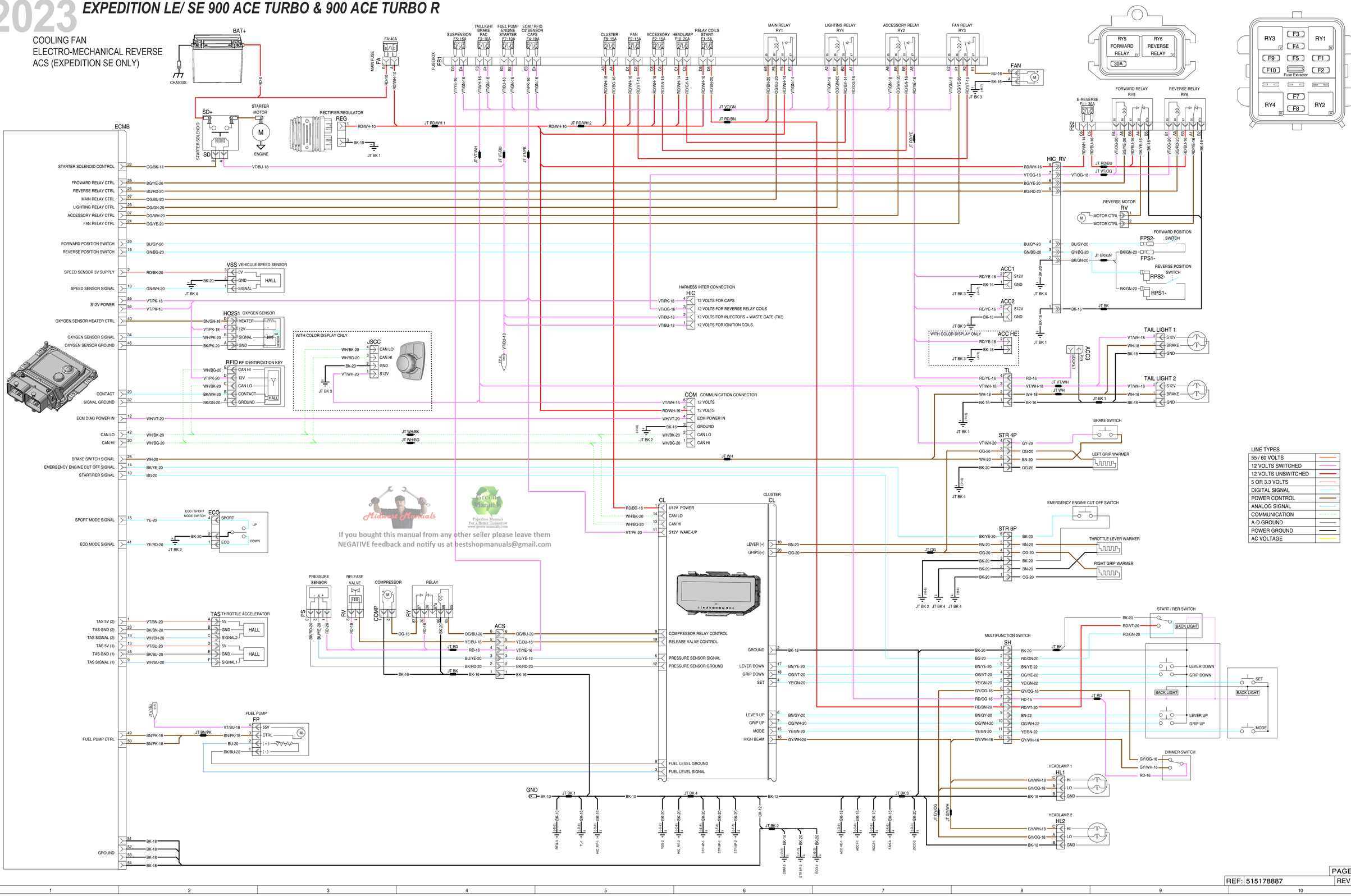


Midwest Manuals
Green Manuals
Paperless Manuals For a Better Tomorrow www.green-manuals.com
If you bought this manual from any other seller please leave them NEGATIVE feedback and notify us at bestshopmanuals@gmail.com

LINE TYPES

| |
|---|
| 55 / 60 VOLTS |
| 12 VOLTS SWITCHED |
| 12 VOLTS UNSWITCHED |
| 5 OR 3.3 VOLTS |
| DIGITAL SIGNAL |
| POWER CONTROL |
| ANALOG SIGNAL |
| COMMUNICATION |
| A-D GROUND |
| POWER GROUND |
| AC VOLTAGE |

# 2023 600 ACE
ENGINE HARNESS

ECMA

ELECTRONIC THROTTLE CONTROL
ETC

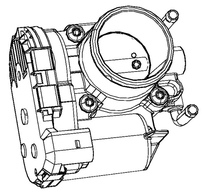

| | | | |
|---|---|---|---|
| 3.3 VOLTS | 6 | BG/YE-18 | K4 |
| MOTOR (+) | 5 | BG/RD-18 | L1 |
| SIGNAL 2 | 4 | BG/GN-18 | K3 |
| MOTOR (-) | 3 | BG/BK-18 | L2 |
| GROUND | 2 | BG/GY-18 | A2 |
| SIGNAL 1 | 1 | BG/WH-18 | F3 |

MANIFOLD ABSOLUTE PRESSURE
AND TEMPERATURE SENSOR
MAPTS

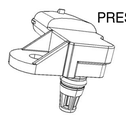

| | | | |
|---|---|---|---|
| PRESSURE SIGNAL | 4 | WH/BU-18 | G4 |
| 5 VOLTS | 3 | PK/BU-18 | B4 |
| TEMP. SIGNAL | 2 | WH/GY-18 | H3 |
| GROUND | 1 | BK/BU-18 | H2 |

COOLANT TEMPERATURE SENSOR
CTS

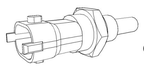

| | | | |
|---|---|---|---|
| SIGNAL | 1 | BK/OG-18 | J2 |
| GROUND | 2 | BG/OG-18 | A1 |

CRANKSHAFT POSITION SENSOR
CPS



| | | | |
|---|---|---|---|
| SIGNAL | 1 | BU/YE-18 | H1 |
| SIGNAL | 2 | YE/WH-18 | K2 |

OIL PRESSURE SWITCH
OPS



| | | | |
|---|---|---|---|
| SIGNAL | | LT BU-18 | E3 |



Midwest Manuals
Green Manuals
Paperless Manuals For a Better Tomorrow www.green-manuals.com
If you bought this manual from any other seller please leave them NEGATIVE feedback and notify us at bestshopmanuals@gmail.com

ECMA

| | | | |
|---|---|---|---|
| D4 | | BK/GN-18 | 1 GROUND |
| E2 | | YE/GN-18 | 2 SIGNAL |
| | | OG/GN-18 | 3 12 VOLTS |
| C1 | | OG/GN-18 | 4 12 VOLTS |
| | | OG/BU-18 | 3 REVERSE ENABLE |
| | | VT/BU-16 | 2 12 VOLTS FOR INJECTORS |
| | | VT/GN-16 | 1 12 VOLTS FOR IGNITION COILS |
| J1 | | VT/BU-18 | 1 12 VOLTS |
| | | BN/RD-18 | 2 CONTROL |
| K1 | | VT/BU-18 | 1 12 VOLTS |
| | | BN/BU-18 | 2 CONTROL |
| M1 | | VT/GN-16 | 1 12 VOLTS |
| | | BN/BK-16 | 3 CONTROL |
| M2 | | VT/GN-16 | 1 12 VOLTS |
| | | BN/OG-16 | 3 CONTROL |

CAMSHAFT POSITION SENSOR
CAPS



HARNESS INTER CONNECTOR
HIC

INJECTOR CYLINDER 1
INJ_1



INJECTOR CYLINDER 2
INJ_2



IGNITION COIL
CYLINDER 1
COIL_1

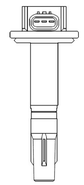

IGNITION COIL
CYLINDER 2
COIL_2

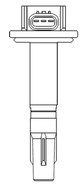

JT VT/BU

JT VT/GN

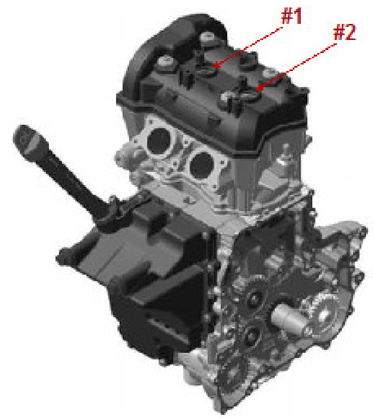


LINE TYPES

| | |
|---|---|
| 55 / 60 VOLTS | |
| 12 VOLTS SWITCHED | |
| 12 VOLTS UNSWITCHED | |
| 5 OR 3.3 VOLTS | |
| DIGITAL SIGNAL | |
| POWER CONTROL | |
| ANALOG SIGNAL | |
| COMMUNICATION | |
| A-D GROUND | |
| POWER GROUND | |
| AC VOLTAGE | |

REF 864 347 REV

# 2023 *900 ACE*

ENGINE HARNESS

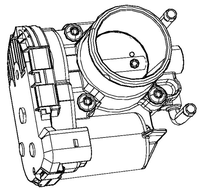

ELECTRONIC THROTTLE CONTROL

ETC

| | | | |
|---|---|---|---|
| 3.3 VOLTS | 6 | BG/YE-18 | K4 |
| MOTOR (+) | 5 | BG/RD-18 | L1 |
| SIGNAL 2 | 4 | BG/GN-18 | K3 |
| MOTOR (-) | 3 | BG/BK-18 | L2 |
| GROUND | 2 | BG/GY-18 | A2 |
| SIGNAL 1 | 1 | BG/WH-18 | F3 |

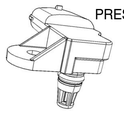

MANIFOLD ABSOLUTE PRESSURE AND TEMPERATURE SENSOR

MAPTS

| | | | |
|---|---|---|---|
| PRESSURE SIGNAL | 4 | WH/BU-18 | G4 |
| 5 VOLTS | 3 | PK/BU-18 | B4 |
| TEMP. SIGNAL | 2 | WH/GY-18 | H3 |
| GROUND | 1 | BK/BU-18 | H2 |



COOLANT TEMPERATURE SENSOR

CTS

| | | | |
|---|---|---|---|
| SIGNAL | 1 | BK/OG-18 | J2 |
| GROUND | 2 | BG/OG-18 | A1 |



CRANKSHAFT POSITION SENSOR

CPS

| | | | |
|---|---|---|---|
| SIGNAL | 1 | BU/YE-18 | H1 |
| SIGNAL | 2 | YE/WH-18 | K2 |



OIL PRESSURE SWITCH

OPS

| | | | |
|---|---|---|---|
| SIGNAL | | LT BU-18 | E3 |

ECMA



ECMA

| | | | |
|---|---|---|---|
| D4 | BK/GN-18 | 1 | GROUND |
| E2 | YE/GN-18 | 2 | SIGNAL |
| | OG/GN-18 | 3 | 12 VOLTS |

CAMSHAFT POSITION SENSOR

CAPS



HARNESS INTER CONNECTOR

HIC

| | | |
|---|---|---|
| OG/GN-18 | 4 | 12 VOLTS |
| VT/OG-18 | 3 | REVERSE ENABLE |
| VT/BU-16 | 2 | 12 VOLTS FOR INJECTORS |
| VT/GN-16 | 1 | 12 VOLTS FOR IGNITION COILS |

C1

INJECTOR CYLINDER 1

INJ_1

| | | |
|---|---|---|
| VT/BU-18 | 2 | 12 VOLTS |
| B3 BN/RD-18 | 1 | CONTROL |



JT VT/BU

IGNITION COIL CYLINDER 1

ENGINE COIL_1

| | | |
|---|---|---|
| VT/GN-16 | 1 | 12 VOLTS |
| M4 BN/BK-16 | 3 | CONTROL |

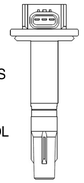

JT VT/GN

INJECTOR CYLINDER 2

INJ_2

| | | |
|---|---|---|
| VT/BU-18 | 2 | 12 VOLTS |
| K1 BN/BU-18 | 1 | CONTROL |



IGNITION COIL CYLINDER 2

ENGINE COIL_2

| | | |
|---|---|---|
| VT/GN-16 | 1 | 12 VOLTS |
| M2 BN/OG-16 | 3 | CONTROL |

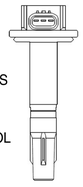

INJECTOR CYLINDER 3

INJ_3

| | | |
|---|---|---|
| VT/BU-18 | 2 | 12 VOLTS |
| J1 BN/GY-18 | 1 | CONTROL |



IGNITION COIL 3

ENGINE COIL_3

| | | |
|---|---|---|
| VT/GN-16 | 1 | 12 VOLTS |
| M1 BN/YE-16 | 3 | CONTROL |

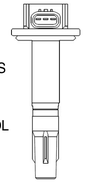

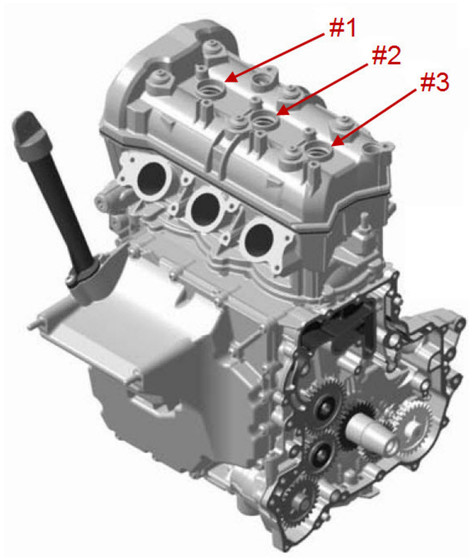


LINE TYPES

| | |
|---|---|
| 55 / 60 VOLTS | |
| 12 VOLTS SWITCHED | |
| 12 VOLTS UNSWITCHED | |
| 5 OR 3.3 VOLTS | |
| DIGITAL SIGNAL | |
| POWER CONTROL | |
| ANALOG SIGNAL | |
| COMMUNICATION | |
| A-D GROUND | |
| POWER GROUND | |
| AC VOLTAGE | |

Midwest Manuals
Green Manuals
Paperless Manuals For a Better Tomorrow www.green-manuals.com
If you bought this manual from any other seller please leave them NEGATIVE feedback and notify us at bestshopmanuals@gmail.com

REF 264422 REV

# 2023 900 ACE TURBO & TURBO R

ENGINE HARNESS



BOOST PRESSURE SENSOR

BPS

| | | | |
|---|---|---|---|
| PRESSURE SIGNAL | 3 | BG/GY-18 | 30 |
| GROUND | 2 | BK/BU-18 | 37 |
| 5 VOLTS | 1 | PK/BU-18 | 1 |



MANIFOLD ABSOLUTE PRESSURE AND TEMPERATURE SENSOR

MAPTS

| | | | |
|---|---|---|---|
| PRESSURE SIGNAL | 4 | GY/BU-18 | 42 |
| 5 VOLTS | 3 | PK/BU-18 | 2 |
| TEMP. SIGNAL | 2 | WH/GY-18 | 31 |
| GROUND | 1 | BK/GN-18 | 27 |



KNOCK SENSOR

KS

| | | | |
|---|---|---|---|
| GROUND | 1 | YE/BU-18 | 20 |
| SIGNAL | 2 | BG/BU-18 | 8 |

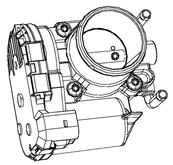

ELECTRONIC THROTTLE CONTROL

ETC

| | | | |
|---|---|---|---|
| 3.3 VOLTS | 6 | BG/YE-18 | 3 |
| MOTOR (+) | 5 | BG/RD-18 | 12 |
| SIGNAL 2 | 4 | BG/GN-18 | 21 |
| MOTOR (-) | 3 | BG/BK-18 | 24 |
| GROUND | 2 | BG/GY-18 | 26 |
| SIGNAL 1 | 1 | BG/WH-18 | 40 |

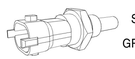

COOLANT TEMPERATURE SENSOR

CTS

| | | | |
|---|---|---|---|
| SIGNAL | 1 | BG/OG-18 | 22 |
| GROUND | 2 | BK/OG-18 | 39 |



CRANKSHAFT POSITION SENSOR

CPS

| | | | |
|---|---|---|---|
| SIGNAL | 1 | BU/YE-18 | 13 |
| SIGNAL | 2 | YE/WH-18 | 14 |



OIL PRESSURE SWITCH

OPS

| | | | |
|---|---|---|---|
| SIGNAL | | LT BU-18 | 9 |

ECMA

ECMA

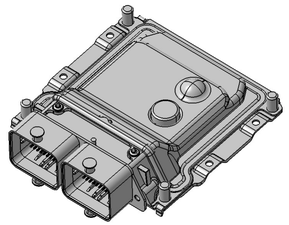



Midwest Manuals



Repair Manuals
Paperless Manuals
For a Better Tomorrow
www.green-manuals.com

If you bought this manual from any other seller please leave them
NEGATIVE feedback and notify us at bestshopmanuals@gmail.com

TURBO CONTROL VALVE (WASTEGATE SOLENOID)

TCV

| | | | |
|---|---|---|---|
| 46 | BN/BG-18 | 1 | CONTROL |
| | VT/BU-18 | 2 | 12 VOLTS |

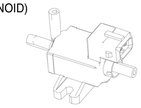

CAMSHAFT POSITION SENSOR

CAPS

| | | | |
|---|---|---|---|
| 25 | BK/GN-18 | 1 | GROUND |
| 44 | YE/GN-18 | 2 | SIGNAL |
| | OG/GN-18 | 3 | 12 VOLTS |



HARNESS INTER CONNECTOR

HIC

| | | | |
|---|---|---|---|
| | OG/GN-18 | 4 | 12 VOLTS |
| 35 | VT/OG-18 | 3 | REVERSE ENABLE |
| | VT/BU-16 | 2 | 12 VOLTS FOR INJECTORS + WASTEGATE |
| | VT/GN-16 | 1 | 12 VOLTS FOR IGNITION COILS |

INJECTOR CYLINDER 1

INJ_1

| | | | |
|---|---|---|---|
| | VT/BU-18 | 2 | 12 VOLTS |
| 7 | BN/RD-18 | 1 | CONTROL |



IGNITION COIL CYLINDER 1

COIL_1

| | | | |
|---|---|---|---|
| | VT/GN-16 | 1 | 12 VOLTS |
| | BK-16 | 2 | GROUND |
| 56 | BN/BK-16 | 3 | CONTROL |

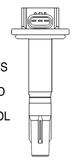

JT VT/BU

JT VT/GN

INJECTOR CYLINDER 2

INJ_2

| | | | |
|---|---|---|---|
| | VT/BU-18 | 2 | 12 VOLTS |
| 4 | BN/BU-18 | 1 | CONTROL |



IGNITION COIL CYLINDER 2

COIL_2

| | | | |
|---|---|---|---|
| | VT/GN-16 | 1 | 12 VOLTS |
| | BK-16 | 2 | GROUND |
| 54 | BN/OG-16 | 3 | CONTROL |

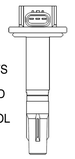

JT BK

INJECTOR CYLINDER 3

INJ_3

| | | | |
|---|---|---|---|
| | VT/BU-18 | 2 | 12 VOLTS |
| 18 | BN/GY-18 | 1 | CONTROL |



IGNITION COIL 3

COIL_3

| | | | |
|---|---|---|---|
| | VT/GN-16 | 1 | 12 VOLTS |
| | BK-16 | 2 | GROUND |
| 55 | BN/YE-16 | 3 | CONTROL |

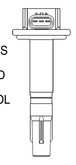

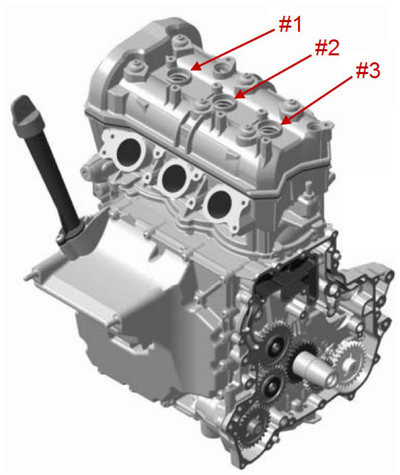


LINE TYPES

| |
|---|
| 55 / 60 VOLTS |
| 12 VOLTS SWITCHED |
| 12 VOLTS UNSWITCHED |
| 5 OR 3.3 VOLTS |
| DIGITAL SIGNAL |
| POWER CONTROL |
| ANALOG SIGNAL |
| COMMUNICATION |
| A-D GROUND |
| POWER GROUND |
| AC VOLTAGE |

REF: 666 557 REV:

2023

# SECONDARY HARNESS (EXPEDITION LE & SE)
# CELLPHONE HARNESS (HEATER AND USB CONNECTION)

(IF OPTION IS INSTALLED ON VEHICULE)

## FRONT HEATED SEAT HARNESS
(AVAILABLE AS ACCESSORY ONLY)

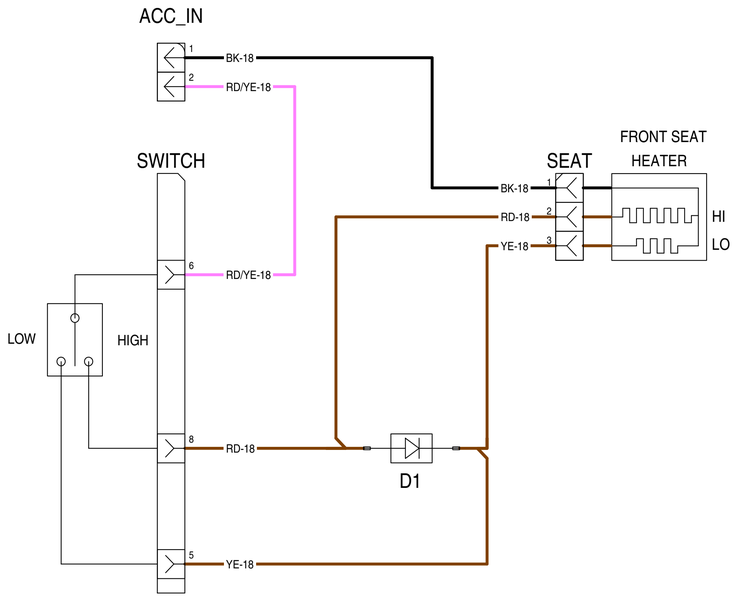


AVAILABLE AS ACCESSORY ONLY

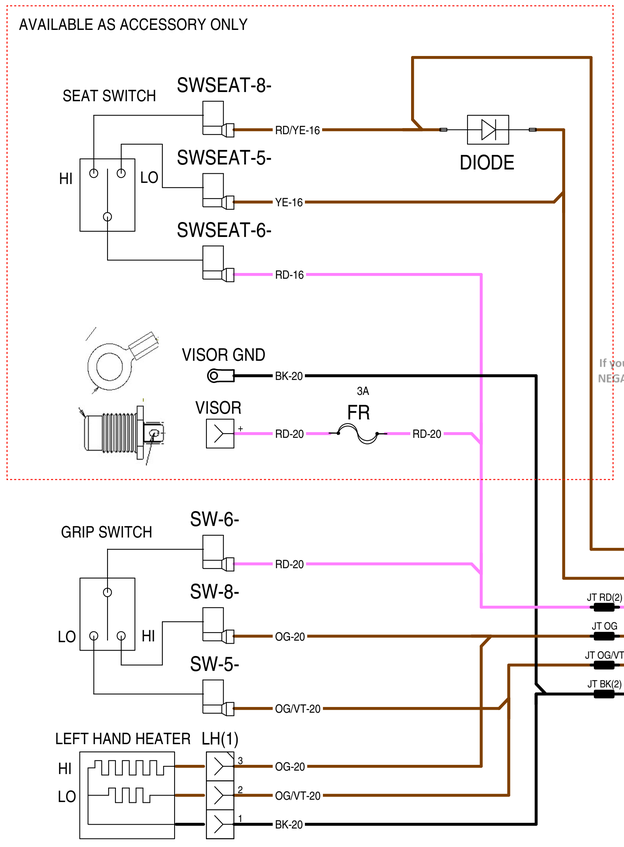


## CELLPHONE HARNESS
WITH 7.8" COLOR DISPLAY

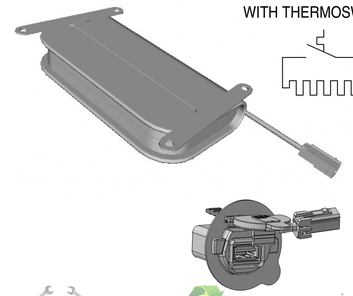

HEATER CONTROLLED
WITH THERMOSWITCH

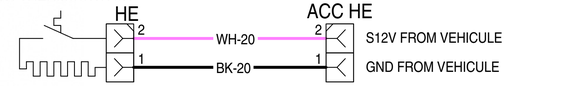


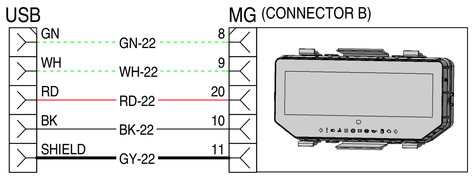


Midwest Manuals
If you bought this manual from any other seller please leave them NEGATIVE feedback and notify us at bestshopmanuals@gmail.com
Paperless Manuals For a Better Tomorrow www.green-manuals.com

## REAR SEAT HARNESS
(HEATED GRIPS & SEAT)




AVAILABLE AS ACCESSORY ONLY

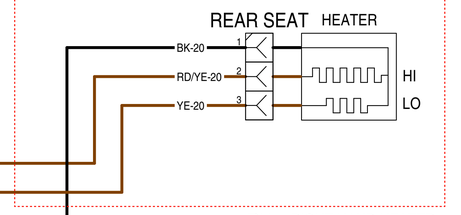





## FRONT HEATED VISOR HARNESS

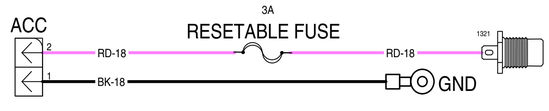


## DOUBLE TAIL LIGHT HARNESS WITH ACCESSORY PLUG

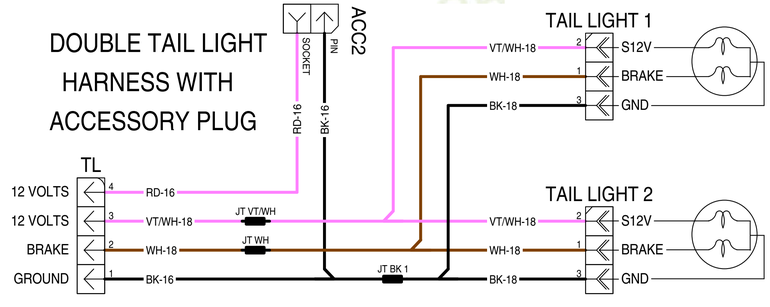


| REF | | REV | 2 |
|---|---|---|---|

# 2023 COMPACT CLUSTER ADAPTOR

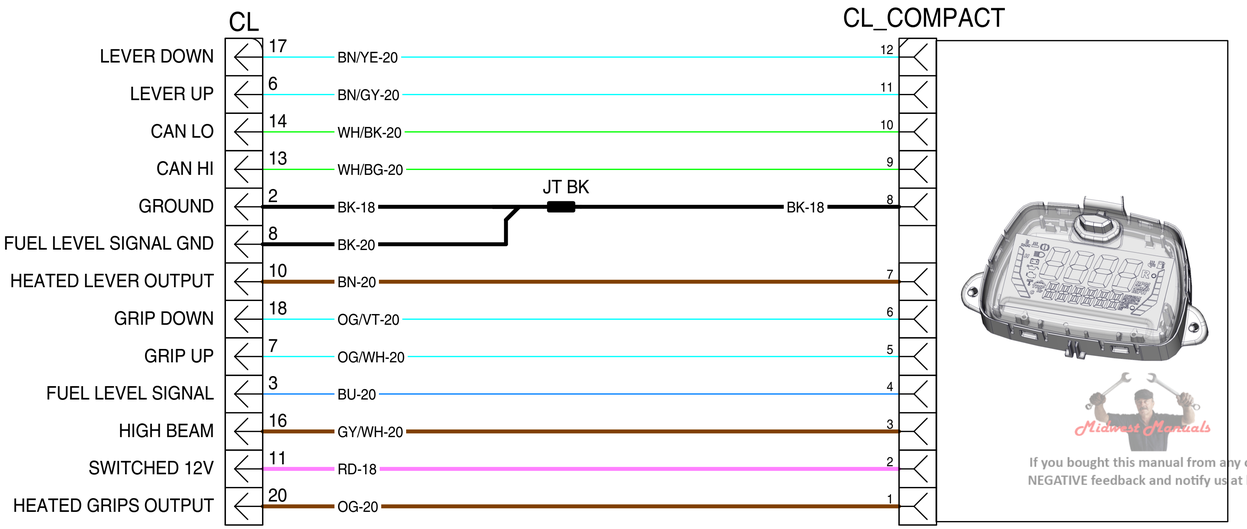


Midwest Manuals
Precise Manuals
Priceless Manuals For a Better Tomorrow www.green-manuals.com
If you bought this manual from any other seller please leave them NEGATIVE feedback and notify us at bestshopmanuals@gmail.com

REF: 515179304 REV:

## Maintenance Schedule

Make sure to perform proper maintenance at recommended intervals as indicated in the tables.

The maintenance chart indicates the items needing to be addressed based on 2 criteria, whichever happens first:

– Calendar time
– Odometer reading.

Your driving habits determines the factors you shall adhere too. For example:

– Someone who uses their vehicle every other weekend trail riding with friends would most likely follow the **odometer reading** to determine the frequency of his maintenance.
– Someone who uses their vehicle seldomly over the year or only on a few occasions would follow the **calendar time** to determine the frequency of his maintenance.

**IMPORTANT**: The following tables show the appropriate maintenance application for the first 3 years. For subsequent years, repeat the same pattern alternatively.

| Maintenance Overview | | |
|---|---|---|
| Calendar Time | Odometer | Deep Snow or Trail/ Cross Over/ Utility |
| Every Month | 1500 km (1000 mi) | **A+** |
| 1 Year | 3000 km (2000 mi) | **A** |
| Every Month | 4500 km (3000 mi) | **A+** |
| 2 Years | 6000 km (4000 mi) | **A** and **B** |
| Every Month | 7500 km (5000 mi) | **A+** |

Take me back to the Maintenance Section

***600 EFI Engine***

| TRAIL / CROSSOVER / UTILITY | A+ | A | B |
|---|---|---|---|
| **A = Adjust**<br>**C = Clean**<br>**I = Inspect**<br>**L = Lubricate**<br>**R = Replace**<br>**T = Torque** | **Every month or 1500 km (1000 mi)** | **Every year or 3000 km (2000 mi)** | **Every 2 years or 6000 km (4000 mi)** |
| Air and Fuel Delivery | | | |
| Fuel components (fuel cap, hoses, clamps and tank fixation) and function | | **I** | |
| In-line fuel filter | | **R** Every 5 years | |
| Body and Chassis | | | |
| Body panels and hardware | | **I, T** | |
| Pivots, latches, hinges and key barrels | | **L** | |
| Engine and Cooling | | | |
| Engine cooling components (coolant concentration, coolant level, hose condition, clamps, leaks) | | **I, A** | |
| Oil pump cable | | **A** | |
| Engine rubber mounts | | | **I** |
| Rewind starter (manual start models) | | | **C, L** |

| TRAIL / CROSSOVER / UTILITY | A+ | A | B |
|---|---|---|---|
| **A = Adjust**<br>**C = Clean**<br>**I = Inspect**<br>**L = Lubricate**<br>**R = Replace**<br>**T = Torque** | **Every month or 1500 km (1000 mi)** | **Every year or 3000 km (2000 mi)** | **Every 2 years or 6000 km (4000 mi)** |
| Spark plugs | | | **R** |
| Oil injection pump strainer | | **I, C** Every 3 years or 10 000 km (6000 mi) | |
| Engine coolant | | **R** Every 5 years | |
| Exhaust and Emissions | | | |
| Exhaust components (gaskets, pipes, muffler condition, leaks) | | **I** | |
| Exhaust manifold | | **T** | |
| Brake | | | |
| Brake components and function | | **I, L** | |
| Brake fluid | | | **R** Every 2 years |
| Drive | | | |
| Chaincase drive chain tension | **A** | **A** | |

| TRAIL / CROSSOVER / UTILITY | A+ | A | B |
|---|---|---|---|
| **A = Adjust**<br>**C = Clean**<br>**I = Inspect**<br>**L = Lubricate**<br>**R = Replace**<br>**T = Torque** | **Every month or 1500 km (1000 mi)** | **Every year or 3000 km (2000 mi)** | **Every 2 years or 6000 km (4000 mi)** |
| Gearbox / chaincase oil level | I | I | |
| Track alignment and tension | A | A | |
| Gearbox / chaincase oil | | | R |
| Continuously Variable Transmission (CVT) | | | |
| CVT components and function | | I, C, L | |
| CVT drive belt condition | I | | |
| CVT drive belt tension | A | A | |
| Drive pulley retaining screw | | T | |
| Electrical | | | |
| Battery connections and condition | | I | |
| Electrical harness routing | | I | |
| Headlight aim | | A | |
| Modules and applicable software updates | | I | |
| Operation of control switches and lighting | | I | |
| Steering and Controls | | | |
| Ski runners | I | I | |

| TRAIL / CROSSOVER / UTILITY | A+ | A | B |
|---|---|---|---|
| **A = Adjust**<br>**C = Clean**<br>**I = Inspect**<br>**L = Lubricate**<br>**R = Replace**<br>**T = Torque** | **Every month or 1500 km (1000 mi)** | **Every year or 3000 km (2000 mi)** | **Every 2 years or 6000 km (4000 mi)** |
| Gearbox position lever operation | | **I, A** | |
| Steering alignment | | **I, A** | |
| Steering components and function | | **I** | |
| Throttle cable | | **A** | |
| Throttle operation | | **I** | |
| Suspension | | | |
| Suspension components and function | | **I, L** | |

| DEEP SNOW | A+ | A | B |
|---|---|---|---|
| **A = Adjust**<br>**C = Clean**<br>**I = Inspect**<br>**L = Lubricate**<br>**R = Replace**<br>**T = Torque** | **Every month or 1500 km (1000 mi)** | **Every year or 3000 km (2000 mi)** | **Every 2 years or 6000 km (4000 mi)** |
| Air and Fuel Delivery | | | |
| Fuel components (fuel cap, hoses, clamps and tank fixation) and function | | **I** | |
| In-line fuel filter | | **R** Every 5 years | |
| Body and Chassis | | | |
| Body panels and hardware | | **I, T** | |
| Pivots, latches, hinges and key barrels | | **L** | |
| Engine and Cooling | | | |
| Engine cooling components (coolant concentration, coolant level, hose condition, clamps, leaks) | | **I, A** | |
| Oil pump cable | | **A** | |
| Engine rubber mounts | | | **I** |
| Rewind starter (manual start models) | | | **C, L** |
| Spark plugs | | | **R** |
| Oil injection pump strainer | | **I, C** Every 3 years or | |

| DEEP SNOW | A+ | A | B |
|---|---|---|---|
| **A = Adjust**<br>**C = Clean**<br>**I = Inspect**<br>**L = Lubricate**<br>**R = Replace**<br>**T = Torque** | **Every month or 1500 km (1000 mi)** | **Every year or 3000 km (2000 mi)** | **Every 2 years or 6000 km (4000 mi)** |
| | | 10 000 km (6000 mi) | |
| Engine coolant | | **R** Every 5 years | |
| Exhaust and Emissions | | | |
| Exhaust components (gaskets, pipes, muffler condition, leaks) | | **I** | |
| Exhaust manifold | | **T** | |
| Brake | | | |
| Brake components and function | | **I, L** | |
| Brake fluid | | | **R** Every 2 years |
| Drive | | | |
| Chaincase drive chain tension | **A** After the first 75 km (50 mi) then every 500 km (300 mi), up to then every | **A** | |

| DEEP SNOW | A+ | A | B |
|---|---|---|---|
| **A = Adjust**<br>**C = Clean**<br>**I = Inspect**<br>**L = Lubricate**<br>**R = Replace**<br>**T = Torque** | **Every month or 1500 km (1000 mi)** | **Every year or 3000 km (2000 mi)** | **Every 2 years or 6000 km (4000 mi)** |
| | 1500 km (1000 mi) | | |
| Gearbox / chaincase oil level | | **I** | |
| Track alignment and tension | **A**<br>After the first 75 km (50 mi) then every 500 km (300 mi), up to then every 1500 km (1000 mi) | **A** | |
| Gearbox / chaincase oil | | | **R** |
| Continuously Variable Transmission (CVT) | | | |
| CVT components and function | | **I, C, L** | |
| CVT drive belt condition | **I** | | |
| CVT drive belt tension | **A** | **A** | |
| Drive pulley retaining screw | | **T** | |
| Electrical | | | |

| DEEP SNOW | A+ | A | B |
|---|---|---|---|
| **A = Adjust**<br>**C = Clean**<br>**I = Inspect**<br>**L = Lubricate**<br>**R = Replace**<br>**T = Torque** | **Every month or 1500 km (1000 mi)** | **Every year or 3000 km (2000 mi)** | **Every 2 years or 6000 km (4000 mi)** |
| Battery connections and condition | | **I** | |
| Electrical harness routing | | **I** | |
| Headlight aim | | **A** | |
| Modules and applicable software updates | | **I** | |
| Operation of control switches and lighting | | **I** | |
| Steering and Controls | | | |
| Ski runners | | **I** | |
| Gearbox position lever operation | | **I, A** | |
| Steering alignment | | **I, A** | |
| Steering components and function | | **I** | |
| Throttle cable | | **A** | |
| Throttle operation | | **I** | |
| Suspension | | | |
| Suspension components and function | | **I, L** | |

*E-TEC Engine (except turbo)*

| TRAIL / CROSSOVER / UTILITY | A+ | A | B |
|---|---|---|---|
| **A = Adjust**<br>**C = Clean**<br>**I = Inspect**<br>**L = Lubricate**<br>**R = Replace**<br>**T = Torque** | **Every month or 1500 km (1000 mi)** | **Every year or 3000 km (2000 mi)** | **Every 2 years or 6000 km (4000 mi)** |
| Air and Fuel Delivery | | | |
| Fuel components (fuel cap, hoses, clamps and tank fixation) and function | | **I** | |
| In-line fuel filter | | **R** Every 5 years | |
| Body and Chassis | | | |
| Body panels and hardware | | **I, T** | |
| Pivots, latches, hinges and key barrels | | **L** | |
| Engine and Cooling | | | |
| Engine cooling components (coolant concentration, coolant level, hose condition, clamps, leaks) | | **I, A** | |
| Engine rubber mounts | | | **I** |
| Rewind starter (manual start models) | | | **C, L** |
| Spark plugs | | | **R** Every 3 years |

| TRAIL / CROSSOVER / UTILITY | A+ | A | B |
|---|---|---|---|
| **A = Adjust**<br>**C = Clean**<br>**I = Inspect**<br>**L = Lubricate**<br>**R = Replace**<br>**T = Torque** | **Every month or 1500 km (1000 mi)** | **Every year or 3000 km (2000 mi)** | **Every 2 years or 6000 km (4000 mi)** |
| | | | or 10 000 km (6000 mi) |
| Oil injection pump strainer | | **I, C** Every 3 years or 10 000 km (6000 mi) | |
| RAVE valves | | **I, C** Every 3 years or 10 000 km (6000 mi) | |
| Engine coolant | | **R** Every 5 years | |
| Exhaust and Emissions | | | |
| Exhaust components (gaskets, pipes, muffler condition, leaks) | | **I** | |
| Exhaust manifold | | **T** | |

| TRAIL / CROSSOVER / UTILITY | A+ | A | B |
|---|---|---|---|
| **A = Adjust<br>C = Clean<br>I = Inspect<br>L = Lubricate<br>R = Replace<br>T = Torque** | **Every month or 1500 km (1000 mi)** | **Every year or 3000 km (2000 mi)** | **Every 2 years or 6000 km (4000 mi)** |
| Brake | | | |
| Brake components and function | | I, L | |
| Brake fluid | | | R<br>Every 2 years |
| Drive | | | |
| Chaincase drive chain tension | A | A | |
| Gearbox / chaincase oil level | I | I | |
| Track alignment and tension | A | I, A | |
| Gearbox / chaincase oil | | | R |
| Continuously Variable Transmission (CVT) | | | |
| CVT components and function | | I, C, L | |
| CVT drive belt condition | I | | |
| CVT drive belt tension | A | A | |
| Drive pulley retaining screw | | T | |
| Electrical | | | |
| Battery connections and condition | | I | |

| TRAIL / CROSSOVER / UTILITY | A+ | A | B |
|---|---|---|---|
| **A = Adjust<br>C = Clean<br>I = Inspect<br>L = Lubricate<br>R = Replace<br>T = Torque** | **Every month or 1500 km (1000 mi)** | **Every year or 3000 km (2000 mi)** | **Every 2 years or 6000 km (4000 mi)** |
| Electrical harness routing | | I | |
| Headlight aim | | A | |
| Modules and applicable software updates | | I | |
| Operation of control switches and lighting | | I | |
| Steering and Controls | | | |
| Ski runners | I | I | |
| Gearbox position lever operation | | I, A | |
| Steering alignment | | I, A | |
| Steering components and function | | I | |
| Throttle cable | | A | |
| Throttle operation | | I | |
| Suspension | | | |
| Suspension components and function | | I, L | |

| DEEP SNOW | A+ | A | B |
|---|---|---|---|
| **A = Adjust**<br>**C = Clean**<br>**I = Inspect**<br>**L = Lubricate**<br>**R = Replace**<br>**T = Torque** | **Every month or 1500 km (1000 mi)** | **Every year or 3000 km (2000 mi)** | **Every 2 years or 6000 km (4000 mi)** |
| Air and Fuel Delivery | | | |
| Fuel components (fuel cap, hoses, clamps and tank fixation) and function | | **I** | |
| In-line fuel filter | | **R**<br>Every 5 years | |
| Body and Chassis | | | |
| Body panels and hardware | | **I, T** | |
| Pivots, latches, hinges and key barrels | | **L** | |
| Engine and Cooling | | | |
| Engine cooling components (coolant concentration, coolant level, hose condition, clamps, leaks) | | **I, A** | |
| Engine rubber mounts | | | **I** |
| Rewind starter (manual start models) | | | **C, L** |
| Spark plugs | | **R**<br>Every 3 years or 10 000 km | |

| DEEP SNOW | A+ | A | B |
|---|---|---|---|
| **A = Adjust**<br>**C = Clean**<br>**I = Inspect**<br>**L = Lubricate**<br>**R = Replace**<br>**T = Torque** | **Every month or 1500 km (1000 mi)** | **Every year or 3000 km (2000 mi)** | **Every 2 years or 6000 km (4000 mi)** |
| | | (6000 mi) | |
| Oil injection pump strainer | | **I, C** Every 3 years or 10 000 km (6000 mi) | |
| RAVE valves | | **I, C** Every 3 years or 10 000 km (6000 mi) | |
| Engine coolant | | **R** Every 5 years | |
| Exhaust and Emissions | | | |
| Exhaust components (gaskets, pipes, muffler condition, leaks) | | **I** | |
| Exhaust manifold | | **T** | |
| Brake | | | |
| Brake components and function | | **I, L** | |
| Brake fluid | | | **R** |

| DEEP SNOW | A+ | A | B |
|---|---|---|---|
| **A = Adjust**<br>**C = Clean**<br>**I = Inspect**<br>**L = Lubricate**<br>**R = Replace**<br>**T = Torque** | **Every month or 1500 km (1000 mi)** | **Every year or 3000 km (2000 mi)** | **Every 2 years or 6000 km (4000 mi)** |
| | | | Every 2 years |
| Drive | | | |
| Chaincase drive chain tension | **A**<br>After the first 75 km (50 mi) then every 500 km (300 mi), up to then every 1500 km (1000 mi) | **A** | |
| Gearbox / chaincase oil level | | **I** | |
| Track alignment and tension | **A**<br>After the first 75 km (50 mi) then every 500 km (300 mi), up to then every 1500 km | **I, A** | |

| DEEP SNOW | A+ | A | B |
|---|---|---|---|
| **A = Adjust<br>C = Clean<br>I = Inspect<br>L = Lubricate<br>R = Replace<br>T = Torque** | **Every month or 1500 km (1000 mi)** | **Every year or 3000 km (2000 mi)** | **Every 2 years or 6000 km (4000 mi)** |
| | (1000 mi) | | |
| Gearbox / chaincase oil | | | **R** |
| Continuously Variable Transmission (CVT) | | | |
| CVT components and function | | **I, C, L** | |
| CVT drive belt condition | **I** | | |
| CVT drive belt tension | **A** | **A** | |
| Drive pulley retaining screw | | **T** | |
| Electrical | | | |
| Battery connections and condition | | **I** | |
| Electrical harness routing | | **I** | |
| Headlight aim | | **A** | |
| Modules and applicable software updates | | **I** | |
| Operation of control switches and lighting | | **I** | |
| Steering and Controls | | | |
| Ski runners | | **I** | |
| Gearbox position lever operation | | **I, A** | |
| Steering alignment | | **I, A** | |

| DEEP SNOW | A+ | A | B |
|---|---|---|---|
| A = Adjust<br>C = Clean<br>I = Inspect<br>L = Lubricate<br>R = Replace<br>T = Torque | Every month or 1500 km (1000 mi) | Every year or 3000 km (2000 mi) | Every 2 years or 6000 km (4000 mi) |
| Steering components and function | | I | |
| Throttle cable | | A | |
| Throttle operation | | I | |
| Suspension | | | |
| Suspension components and function | | I, L | |

Take me back to the Maintenance Section

## Maintenance Schedule

Make sure to perform proper maintenance at recommended intervals as indicated in the tables.

The maintenance chart indicates the items needing to be addressed based on 2 criteria, whichever happens first:

– Calendar time
– Odometer reading.

Your driving habits determines the factors you shall adhere too. For example:

– Someone who uses their vehicle every other weekend trail riding with friends would most likely follow the **odometer reading** to determine the frequency of his maintenance.
– Someone who uses their vehicle seldomly over the year or only on a few occasions would follow the **calendar time** to determine the frequency of his maintenance.

**IMPORTANT**: The following tables show the appropriate maintenance application for the first 3 years. For subsequent years, repeat the same pattern alternatively.

| Maintenance Overview | | |
|---|---|---|
| Calendar Time | Odometer | Trail/ Cross Over/ Utility |
| Every Month | 1500 km (1000 mi) | **A+** |
| 1 Year | 3000 km (2000 mi) | **A** |
| Every Month | 4500 km (3000 mi) | **A+** |
| 2 Years | 6000 km (4000 mi) | **A** and **B** |
| Every Month | 7500 km (5000 mi) | **A+** |

Take me back to the Maintenance Section

***600 ACE/ 900 ACE Engines***

| TRAIL / CROSSOVER / UTILITY | A+ | A | B |
|---|---|---|---|
| **A = Adjust**<br>**C = Clean**<br>**I = Inspect**<br>**L = Lubricate**<br>**R = Replace**<br>**T = Torque** | **Every month or 1500 km (1000 mi)** | **Every year or 3000 km (2000 mi)** | **Every 2 years or 6000 km (4000 mi)** |
| Air and Fuel Delivery | | | |
| Fuel components (fuel cap, hoses, clamps and tank fixation) and function | | **I** | |
| In-line fuel filter | | **R** Every 5 years | |
| Body and Chassis | | | |
| Body panels and hardware | | **I, T** | |
| Pivots, latches, hinges and key barrels | | **L** | |
| Engine and Cooling | | | |
| Engine cooling components (coolant concentration, coolant level, hose condition, clamps, leaks) | | **I, A** | |
| Engine oil and oil filter | | **R** | |
| Engine seals and gaskets | | **I** | |
| Spark plugs | | **R** Every 3 years | |

| TRAIL / CROSSOVER / UTILITY | A+ | A | B |
|---|---|---|---|
| **A = Adjust**<br>**C = Clean**<br>**I = Inspect**<br>**L = Lubricate**<br>**R = Replace**<br>**T = Torque** | **Every month or 1500 km (1000 mi)** | **Every year or 3000 km (2000 mi)** | **Every 2 years or 6000 km (4000 mi)** |
| | | or 10 000 km (6000 mi) | |
| Engine coolant | | **R** Every 5 years | |
| Exhaust and Emissions | | | |
| Exhaust components (gaskets, pipes, muffler condition, leaks) | | **I** | |
| Exhaust manifold | | **T** | |
| Brake | | | |
| Brake components and function | | **I, L** | |
| Brake fluid | | | **R** Every 2 years |
| Drive | | | |
| Chaincase drive chain tension | **A** | **A** | |
| Gearbox / chaincase oil level | **I** | **I** | |
| Track alignment and tension | **A** | **I, A** | |

| TRAIL / CROSSOVER / UTILITY | A+ | A | B |
|---|---|---|---|
| **A = Adjust**<br>**C = Clean**<br>**I = Inspect**<br>**L = Lubricate**<br>**R = Replace**<br>**T = Torque** | **Every month or 1500 km (1000 mi)** | **Every year or 3000 km (2000 mi)** | **Every 2 years or 6000 km (4000 mi)** |
| Gearbox / chaincase oil | | | R |
| Continuously Variable Transmission (CVT) | | | |
| CVT components and function | | I, C, L | |
| CVT drive belt condition | I | | |
| CVT drive belt tension | A | A | |
| Drive pulley retaining screw | | T | |
| Electrical | | | |
| Battery connections and condition | | I | |
| Electrical harness routing | | I | |
| Headlight aim | | A | |
| Modules and applicable software updates | | I | |
| Operation of control switches and lighting | | I | |
| Steering and Controls | | | |
| Ski runners | I | I | |
| Gearbox position lever operation | | I, A | |
| Steering alignment | | I, A | |

| TRAIL / CROSSOVER / UTILITY | A+ | A | B |
|---|---|---|---|
| **A = Adjust**<br>**C = Clean**<br>**I = Inspect**<br>**L = Lubricate**<br>**R = Replace**<br>**T = Torque** | **Every month or 1500 km (1000 mi)** | **Every year or 3000 km (2000 mi)** | **Every 2 years or 6000 km (4000 mi)** |
| Steering components and function | | I | |
| Throttle cable | | A | |
| Throttle operation | | I | |
| Suspension | | | |
| Suspension components and function | | I, L | |

***900 ACE Turbo/ R***

| TRAIL / CROSSOVER / UTILITY | A+ | A | B |
|---|---|---|---|
| **A = Adjust**<br>**C = Clean**<br>**I = Inspect**<br>**L = Lubricate**<br>**R = Replace**<br>**T = Torque** | **Every month or 1500 km (1000 mi)** | **Every year or 3000 km (2000 mi)** | **Every 2 years or 6000 km (4000 mi)** |
| Air and Fuel Delivery | | | |
| Fuel components (fuel cap, hoses, clamps and tank fixation) and function | | **I** | |
| In-line fuel filter | | **R** Every 5 years | |
| Body and Chassis | | | |
| Body panels and hardware | | **I, T** | |
| Pivots, latches, hinges and key barrels | | **L** | |
| Engine and Cooling | | | |
| Engine cooling components (coolant concentration, coolant level, hose condition, clamps, leaks) | | **I, A** | |
| Engine oil and oil filter | | **R** | |
| Engine seals and gaskets | | **I** | |
| Spark plugs | | **R** Every 3 years | |

| TRAIL / CROSSOVER / UTILITY | A+ | A | B |
|---|---|---|---|
| **A = Adjust**<br>**C = Clean**<br>**I = Inspect**<br>**L = Lubricate**<br>**R = Replace**<br>**T = Torque** | **Every month or 1500 km (1000 mi)** | **Every year or 3000 km (2000 mi)** | **Every 2 years or 6000 km (4000 mi)** |
| | | or<br>10 000 km (6000 mi) | |
| Engine coolant | | **R**<br>Every 5 years | |
| Exhaust and Emissions | | | |
| Exhaust components (gaskets, pipes, muffler condition, leaks) | | **I** | |
| Exhaust manifold | | **T** | |
| Turbo exhaust gasket | | **R**<br>Every 3 years<br>or<br>10 000 km (6000 mi) | |
| Brake | | | |
| Brake components and function | | **I, L** | |
| Brake fluid | | **R**<br>Every 2 years | |

Midwest Manuals
Green Manuals
Paperless Manuals For a Better Tomorrow www.green-manuals.com
If you bought this manual from any other seller please leave them NEGATIVE feedback and notify us at bestshopmanuals@gmail.com

| TRAIL / CROSSOVER / UTILITY | A+ | A | B |
|---|---|---|---|
| **A = Adjust**<br>**C = Clean**<br>**I = Inspect**<br>**L = Lubricate**<br>**R = Replace**<br>**T = Torque** | **Every month or 1500 km (1000 mi)** | **Every year or 3000 km (2000 mi)** | **Every 2 years or 6000 km (4000 mi)** |
| Drive | | | |
| Chaincase drive chain tension | **A** | **A** | |
| Gearbox / chaincase oil level | **I** | **I** | |
| Track alignment and tension | **A** | **I, A** | |
| Gearbox / chaincase oil | | | **R** |
| Continuously Variable Transmission (CVT) | | | |
| CVT components and function | | **I, C, L** | |
| CVT drive belt condition | **I** | | |
| CVT drive belt tension | **A** | **A** | |
| Drive pulley retaining screw | | **T** | |
| Electrical | | | |
| Battery connections and condition | | **I** | |
| Electrical harness routing | | **I** | |
| Headlight aim | | **A** | |
| Modules and applicable software updates | | **I** | |
| Operation of control switches and lighting | | **I** | |

| TRAIL / CROSSOVER / UTILITY | A+ | A | B |
|---|---|---|---|
| A = Adjust<br>C = Clean<br>I = Inspect<br>L = Lubricate<br>R = Replace<br>T = Torque | Every month or 1500 km (1000 mi) | Every year or 3000 km (2000 mi) | Every 2 years or 6000 km (4000 mi) |
| Steering and Controls | | | |
| Ski runners | I | I | |
| Gearbox position lever operation | | I, A | |
| Steering alignment | | I, A | |
| Steering components and function | | I | |
| Throttle cable | | A | |
| Throttle operation | | I | |
| Suspension | | | |
| Suspension components and function | | I, L | |

Take me back to the Maintenance Section

# 2023

# Engine Service Manual

*600 ACE, 900 ACE, 900 ACE Turbo and 900 ACE Turbo R*

## CALIFORNIA PROPOSITION 65 WARNING

**⚠ WARNING**

**Operating, servicing and maintaining an off-road vehicle can expose you to chemicals including engine exhaust, carbon monoxide, phthalates, and lead, which are known to the State of California to cause cancer and birth defects or other reproductive harm. To minimize exposure, avoid breathing exhaust, do not idle the engine except as necessary, service your vehicle in a well-ventilated area and wear gloves or wash your hands frequently when servicing your vehicle. For more information go to www.p65warnings.ca.gov/products/passenger-vehicle.**

**01 ENGINE ..... 1**
**INTAKE MANIFOLD - GEN1 ..... 2**
GENERAL ..... 5
PROCEDURES ..... 5
MANIFOLD ABSOLUTE PRESSURE AND TEMPERATURE SENSOR (MAPTS) ..... 5
INTAKE MANIFOLD ..... 7
**INTAKE MANIFOLD - GEN2 ..... 12**
GENERAL ..... 13
PROCEDURES ..... 13
MANIFOLD ABSOLUTE PRESSURE AND TEMPERATURE SENSOR (MAPTS) ..... 13
INTAKE MANIFOLD ..... 16
**EXHAUST MANIFOLD – 600 ACE ..... 20**
GENERAL ..... 21
PROCEDURES ..... 21
EXHAUST MANIFOLD ..... 21
**EXHAUST MANIFOLD – 900 ACE ..... 22**
GENERAL ..... 23
PROCEDURES ..... 23
EXHAUST MANIFOLD ..... 23
**TURBOCHARGER ..... 25**
GENERAL ..... 27
BOOST PRESSURE SENSOR (BPS) ..... 27
BOOST CONTROL VALVE (BCV) ..... 28
TURBOCHARGER ..... 30
WASTE GATE ..... 31
WASTE GATE ACTUATOR ROD ..... 31
MAINTENANCE ..... 31
PRECAUTIONS ..... 31
TROUBLESHOOTING ..... 31
TROUBLESHOOTING ..... 31
PROCEDURES ..... 34
OIL PRESSURE LINE ..... 34
OIL RETURN HOSE ..... 35
COOLING WATER PIPE ..... 36
EXHAUST FLANGE ..... 37
TURBOCHARGER ..... 38
**LUBRICATION SYSTEM - GEN1 ..... 44**
GENERAL ..... 49
SYSTEM DESCRIPTION ..... 49
MAINTENANCE ..... 49
RECOMMENDED ENGINE OIL ..... 49
ENGINE OIL LEVEL VERIFICATION ..... 49
REPLACING THE ENGINE OIL ..... 50
REPLACING THE ENGINE OIL FILTER ..... 51
INSPECTION ..... 52
TESTING THE ENGINE OIL PRESSURE ..... 52
TROUBLESHOOTING ..... 53
TROUBLESHOOTING ..... 53
TROUBLESHOOTING ..... 53
TROUBLESHOOTING ..... 53
PROCEDURES ..... 53
OIL PRESSURE SWITCH (OPS) ..... 53
OIL FILLER TUBE ..... 55
OIL TANK ..... 56

## TABLE OF CONTENTS


OIL COOLER ..... 57
ENGINE OIL PRESSURE REGULATOR ..... 58
OIL PUMP DRIVE GEARS ..... 59
OIL PRESSURE PUMP ..... 60
OIL SUCTION PUMP MODULE ..... 63
OIL SUMP COVER ..... 65
**LUBRICATION SYSTEM - GEN2 ..... 69**
GENERAL ..... 72
SYSTEM DESCRIPTION ..... 72
MAINTENANCE ..... 72
RECOMMENDED ENGINE OIL ..... 72
ENGINE OIL LEVEL VERIFICATION ..... 72
REPLACING THE ENGINE OIL ..... 73
REPLACING THE ENGINE OIL FILTER ..... 74
INSPECTION ..... 75
TESTING THE ENGINE OIL PRESSURE ..... 75
TROUBLESHOOTING ..... 76
TROUBLESHOOTING ..... 76
TROUBLESHOOTING ..... 76
TROUBLESHOOTING ..... 76
PROCEDURES ..... 76
OIL PRESSURE SWITCH (OPS) ..... 76
OIL FILLER TUBE ..... 78
OIL TANK ..... 79
OIL COOLER ..... 80
ENGINE OIL PRESSURE REGULATOR ..... 81
OIL PUMP DRIVE GEARS ..... 82
OIL PRESSURE PUMP ..... 83
OIL SUCTION PUMP MODULE ..... 86
OIL SUMP COVER ..... 88
**COOLING SYSTEM - ENGINE COMPONENTS - GEN1 ..... 91**
GENERAL ..... 93
INSPECTION ..... 93
COOLING SYSTEM LEAK TEST ..... 93
TROUBLESHOOTING ..... 93
TROUBLESHOOTING ..... 93
PROCEDURES ..... 94
COOLANT TEMPERATURE SENSOR (CTS) ..... 94
THERMOSTAT ..... 95
WATER PUMP ..... 96
WATER PUMP DRIVE GEAR ..... 102
**COOLING SYSTEM - ENGINE COMPONENTS - GEN2 ..... 104**
GENERAL ..... 106
INSPECTION ..... 106
COOLING SYSTEM LEAK TEST ..... 106
TROUBLESHOOTING ..... 106
TROUBLESHOOTING ..... 106
PROCEDURES ..... 107
COOLANT TEMPERATURE SENSOR (CTS) ..... 107
THERMOSTAT ..... 108
WATER PUMP ..... 109
WATER PUMP DRIVE GEAR ..... 115
**MAGNETO AND STARTER - GEN1 ..... 117**
GENERAL ..... 119
TROUBLESHOOTING ..... 119
TROUBLESHOOTING ..... 119

PROCEDURES ..... 119
CRANKSHAFT POSITION SENSOR (CPS) ..... 119
MAGNETO COVER ..... 121
STATOR ..... 123
ROTOR ..... 125
SPRAG CLUTCH ..... 127
SPRAG CLUTCH GEAR ..... 128
STARTER DRIVE GEARS ..... 129
STARTER ..... 129
**MAGNETO AND STARTER - GEN2 ..... 131**
GENERAL ..... 133
TROUBLESHOOTING ..... 133
TROUBLESHOOTING ..... 133
PROCEDURES ..... 133
CRANKSHAFT POSITION SENSOR (CPS) ..... 133
MAGNETO COVER ..... 135
STATOR ..... 137
ROTOR ..... 139
SPRAG CLUTCH ..... 140
SPRAG CLUTCH GEAR ..... 142
STARTER DRIVE GEARS ..... 142
STARTER ..... 142
**TIMING CHAIN ..... 145**
GENERAL ..... 146
TROUBLESHOOTING ..... 146
TROUBLESHOOTING ..... 146
PROCEDURES ..... 146
TIMING CHAIN TENSIONER ..... 146
CAMSHAFT TIMING GEARS ..... 147
TIMING CHAIN ..... 148
CHAIN GUIDE (TENSIONER SIDE) ..... 150
**CYLINDER HEAD - 600ACE ..... 152**
GENERAL ..... 156
INSPECTION ..... 156
CYLINDER LEAK TEST ..... 156
TROUBLESHOOTING ..... 157
TROUBLESHOOTING ..... 157
PROCEDURES ..... 157
CAMSHAFT POSITION SENSOR (CAPS) ..... 157
VALVE COVER ..... 160
CAMSHAFTS ..... 162
CAMSHAFT HOLDER ..... 166
HYDRAULIC VALVE LIFTERS ..... 168
CYLINDER HEAD ..... 169
VALVE SPRINGS ..... 171
VALVES ..... 172
**CYLINDER HEAD - 900 ACE - GEN1 ..... 175**
GENERAL ..... 179
INSPECTION ..... 179
CYLINDER LEAK TEST ..... 179
TROUBLESHOOTING ..... 180
TROUBLESHOOTING ..... 180
PROCEDURES ..... 181
CAMSHAFT POSITION SENSOR (CAPS) ..... 181
VALVE COVER ..... 183
CAMSHAFTS ..... 185

CAMSHAFT HOLDER ..... 190
HYDRAULIC VALVE LIFTERS ..... 192
CYLINDER HEAD ..... 193
VALVE SPRINGS ..... 195
VALVES ..... 196
**CYLINDER HEAD - GEN2 ..... 199**
GENERAL ..... 203
INSPECTION ..... 203
CYLINDER LEAK TEST ..... 203
TROUBLESHOOTING ..... 204
TROUBLESHOOTING ..... 204
PROCEDURES ..... 205
CAMSHAFT POSITION SENSOR (CAPS) ..... 205
VALVE COVER ..... 207
CAMSHAFTS ..... 209
CAMSHAFT HOLDER ..... 214
HYDRAULIC VALVE LIFTERS ..... 216
CYLINDER HEAD ..... 217
VALVE SPRINGS ..... 218
VALVES ..... 220
**CYLINDER BLOCK - 600ACE ..... 223**
GENERAL ..... 226
TROUBLESHOOTING ..... 226
TROUBLESHOOTING ..... 226
TROUBLESHOOTING ..... 226
PROCEDURES ..... 226
PTO OIL SEAL ..... 226
CYLINDER BLOCK ..... 228
CRANKSHAFT ..... 234
PISTONS AND CONNECTING RODS ..... 237
PISTON RINGS ..... 243
**CYLINDER BLOCK - 900 ACE - GEN1 ..... 245**
GENERAL ..... 248
TROUBLESHOOTING ..... 248
TROUBLESHOOTING ..... 248
PROCEDURES ..... 249
KNOCK SENSOR (KS) ..... 249
PTO COVER AND PTO OIL SEAL ..... 251
CYLINDER BLOCK ..... 253
CRANKSHAFT ..... 260
PISTONS AND CONNECTING RODS ..... 263
PISTON RINGS ..... 270
**CYLINDER BLOCK - GEN2 ..... 272**
GENERAL ..... 275
TROUBLESHOOTING ..... 275
TROUBLESHOOTING ..... 275
PROCEDURES ..... 276
KNOCK SENSOR (KS) ..... 276
PTO COVER AND PTO OIL SEAL ..... 277
CYLINDER BLOCK ..... 280
CRANKSHAFT ..... 286
PISTONS AND CONNECTING RODS ..... 290
PISTON RINGS ..... 296

**02 ELECTRONIC MANAGEMENT SYSTEM ..... 299**

Midwest Manuals
Green Manuals
Paperless Manuals
For a Better Tomorrow
www.green-manuals.com
If you bought this manual from any other seller please leave them
NEGATIVE feedback and notify us at bestshopmanuals@gmail.com

**ENGINE CONTROL MODULE (ECM) - GEN1 ..... 300**
GENERAL ..... 301
SYSTEM DESCRIPTION ..... 301
TROUBLESHOOTING ..... 301
DIAGNOSTIC TIPS ..... 301
PROCEDURES ..... 301
ENGINE CONTROL MODULE (ECM) ..... 301
**ENGINE CONTROL MODULE (ECM) - GEN2 ..... 306**
GENERAL ..... 307
SYSTEM DESCRIPTION ..... 307
TROUBLESHOOTING ..... 307
DIAGNOSTIC TIPS ..... 307
PROCEDURES ..... 307
ENGINE CONTROL MODULE (ECM) ..... 307
Expanded Electronic Control Module (ECM) – Gen 2 ..... **1152**
Pairing the Engine Cut-Off Switch (DESS Post) (ECM Gen2 (XCU)) ..... **1161**

**03 FUEL SYSTEM ..... 313**
**ELECTRONIC FUEL INJECTION (EFI) - GEN1 ..... 314**
GENERAL ..... 315
SYSTEM DESCRIPTION ..... 315
IDLE SPEED ..... 317
TROUBLESHOOTING ..... 317
DIAGNOSTIC TIPS ..... 317
PROCEDURES ..... 318
FUEL INJECTOR ..... 318
THROTTLE BODY (ELECTRONIC THROTTLE CONTROL (ETC)) ..... 324
THROTTLE POSITION SENSOR (TPS) ..... 327
**ELECTRONIC FUEL INJECTION (EFI) - GEN2 ..... 329**
GENERAL ..... 330
SYSTEM DESCRIPTION ..... 330
IDLE SPEED ..... 332
TROUBLESHOOTING ..... 332
DIAGNOSTIC TIPS ..... 332
PROCEDURES ..... 333
FUEL INJECTOR ..... 333
THROTTLE BODY (ELECTRONIC THROTTLE CONTROL (ETC)) ..... 338
THROTTLE POSITION SENSOR (TPS) ..... 342

**04 ELECTRICAL SYSTEM ..... 345**
**IGNITION COILS AND SPARK PLUGS ..... 346**
GENERAL ..... 346
MAINTENANCE ..... 346
PROCEDURES ..... 346
IGNITION COILS ..... 346
SPARK PLUGS ..... 349
**IGNITION COILS AND SPARK PLUGS - GEN2 ..... 351**
GENERAL ..... 351
MAINTENANCE ..... 351
PROCEDURES ..... 351
IGNITION COILS ..... 351
SPARK PLUGS ..... 354

**05 TECHNICAL SPECIFICATIONS ..... 357**
**ENGINE - 600 ACE ..... 358**

# TABLE OF CONTENTS

ENGINE - 900 ACE ..... 365
ENGINE - 900 ACE TURBO ..... 373

Adapter gauge (Turbo)
(P/N 529036461)

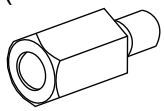

Page:40

Camshaft locking tool(600 ACE)
(P/N 529036306)



Page:165

Camshaft locking tool(900 ACE)
(P/N 529036206)



Page:188, 212

Crankshaft locking tool
(P/N 529036205)



Page:234

Crankshaft locking tool
(P/N 529036272)



Page:260, 287

Crankshaft protector (PTO)
(P/N 420876552)



Page:226

Crankshaft protector
(P/N 529036213)



Page:126, 139

ECM adapter tool GEN2
(P/N 529036513)



Page:14–15, 28, 78, 107, 308–309, 335, 342, 353

ECM adapter tool
(P/N 529036166)



Page:6–7, 55, 94, 120, 134, 249, 302, 320, 327, 348

Engine leak down test kit
(P/N 529035661)



Page:40, 156, 179, 203

Fluke 115 multimeter
(P/N 529035868)



Page:6–7, 14–15, 28–29, 54–55, 77–78, 94, 107, 120, 123–124, 129, 133–134, 137–138, 158–159, 181–182, 205–206, 276, 302, 308–309, 320–321, 328, 335, 343, 347–348, 352–353

Flywheel puller
(P/N 420976235)



Page:126, 139

Fuel hose disconnect tool
(P/N 529036037)



Page:322, 336

Handle
(P/N 420877650)



Page:100, 113

Oil pressure hose
(P/N 529036394)



Page:52, 75

Oil pressure test cap
(P/N 529036158)



Page:52, 75

Oil seal pusher
(P/N 529036210)



Page:100, 113

Oil seal/bearing pusher
(P/N 529036284)



Page:252, 278–279

Piston circlip installer(900 ACE)
(P/N 529036207)



Page:267

Piston circlip installer
(P/N 529036207)



Page:240

Piston circlip installer
(P/N 529036426)



Page:294

# SERVICE TOOLS INDEX

Piston ring compressor
(P/N 529036208)



Page:242, 269, 295

Plug (Turbo)
(P/N 529036460)

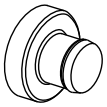

Page:40

Pressure gauge
(P/N 529036395)



Page:52, 75

PTO oil seal installer
(P/N 529036216)



Page:227

Rotary seal installer
(P/N 529036211)



Page:100, 114

Small hose pincher
(P/N 295000076)



Page:9, 17

Test cap
(P/N 529035991)



Page:93, 106

Vacuum/pressure pump
(P/N 529021800)



Page:42, 93, 106

Valve spring compressor cup
(P/N 529036209)



Page:171, 195, 218

Valve spring compressor
(P/N 529035724)



Page:171, 195, 218

Valve holder

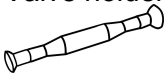

Page:173

Valve stem seal pliers



Page:172

Brake and parts cleaner PRO S2
Page:128, 140–141

Clutch and pulley flange cleaner PRO S1
Page:126

Dielectric grease
Page:160, 183, 207

Dow Corning 111
Page:55, 79, 96, 109

Engine oil
Page:36, 207, 323, 337

Klüeber paste 46 MR 401
Page:130, 143

Loctite 243 (blue)
Page:36, 55, 125, 127, 139–140, 148, 151, 250, 253, 277, 279

Loctite 5910
Page:232, 258, 284

Loctite 648 (green)
Page:128, 141

Loctite chisel (gasket remover)
Page:122, 135, 230, 256, 282

Super Lube grease
Page:227, 252, 278

Synthetic grease
Page:121, 135

T

# ENGINE

# 01 Engine

# Intake Manifold - GEN1

## SERVICE TOOLS

| Description | Part Number | Page |
|---|---|---|
| ECM ADAPTER TOOL | (P/N 529036166) | 6–7 |
| FLUKE 115 MULTIMETER | (P/N 529035868) | 6–7 |
| SMALL HOSE PINCHER | (P/N 295000076) | 9 |

T

## *600 ACE*

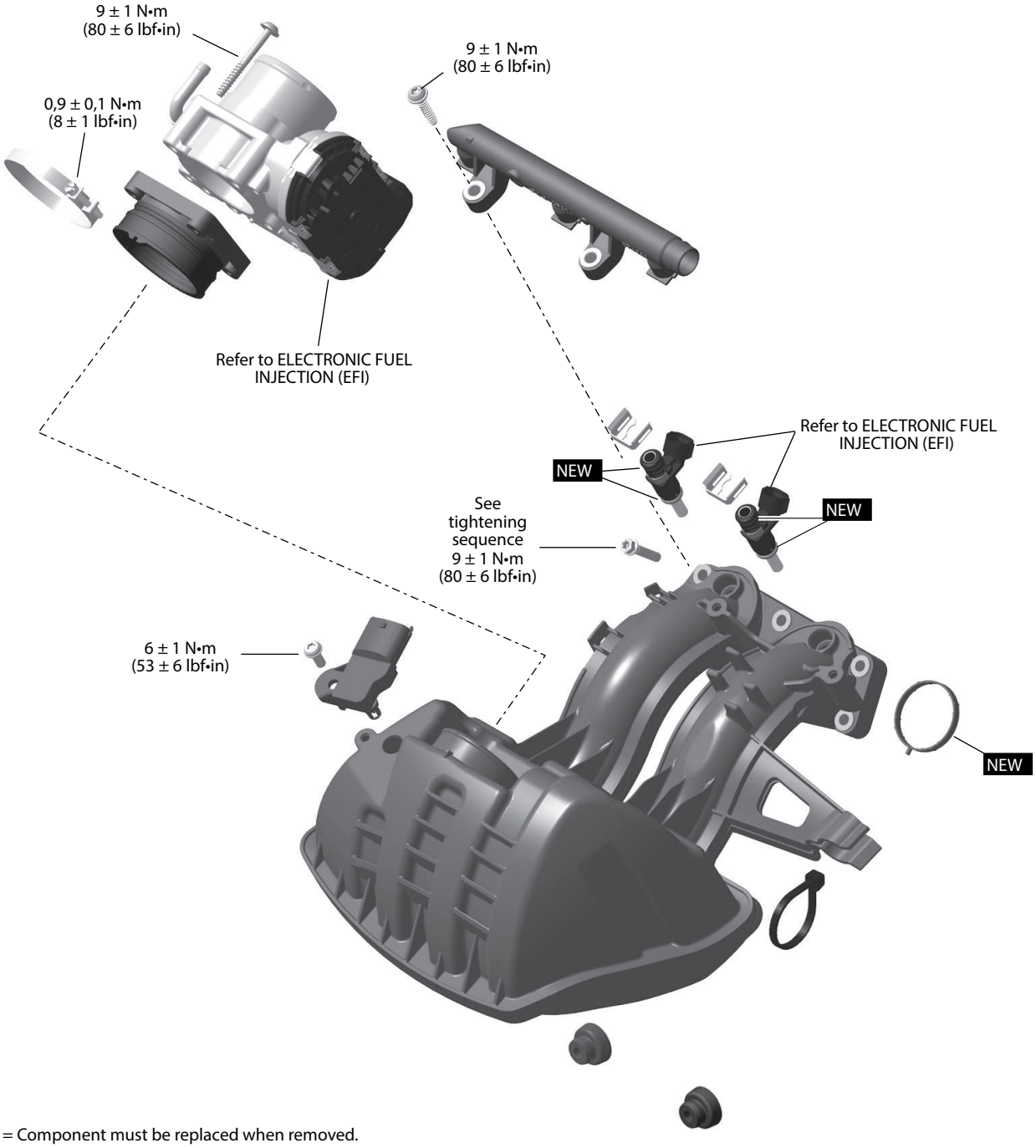


NEW = Component must be replaced when removed.

## *900 ACE*

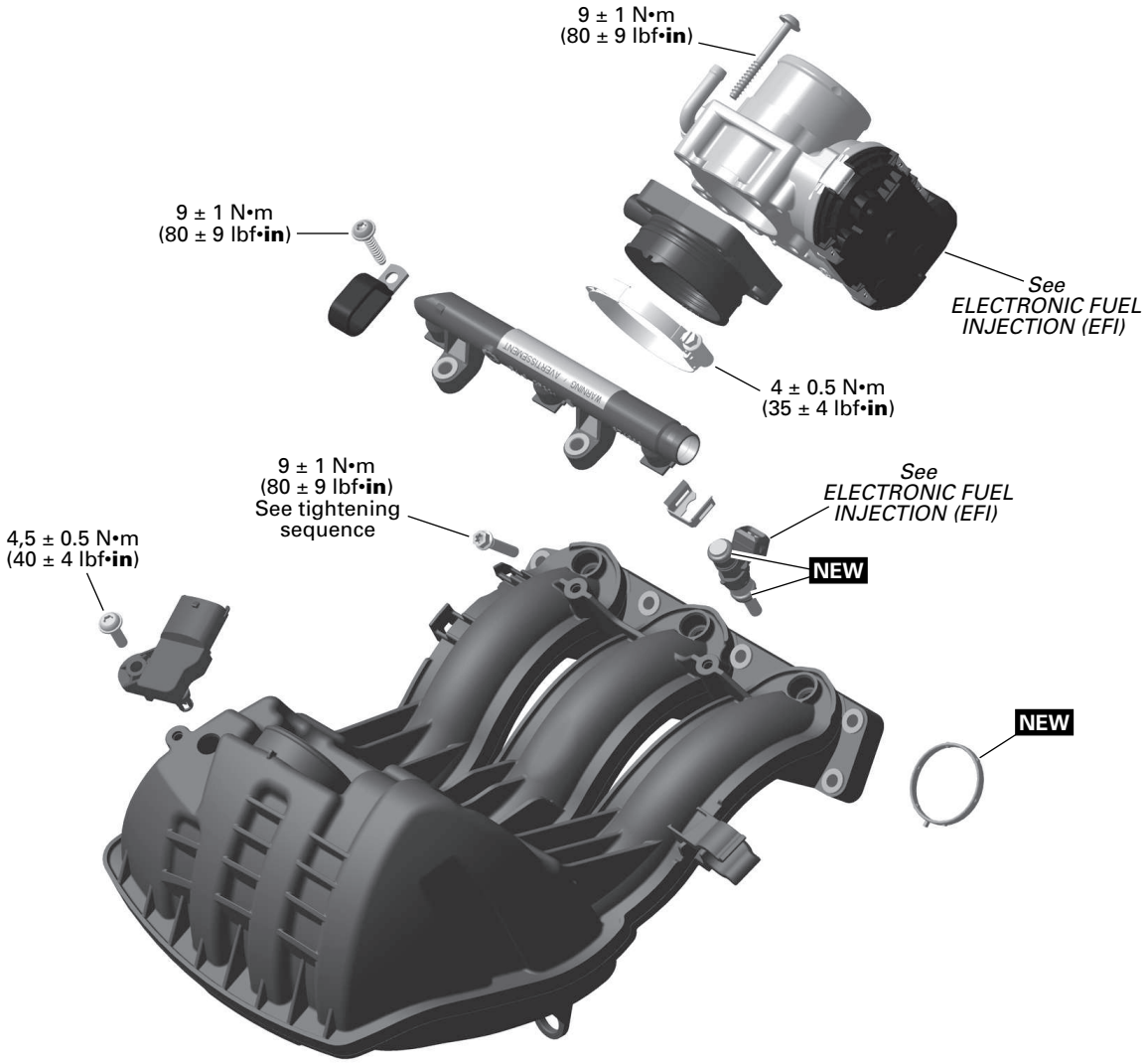


**NEW** = Component must be replaced when removed.

## General

This section refers to the following ECM:

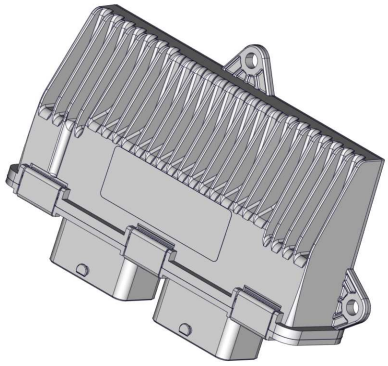

*ECM GEN1 – ME17*

**NOTICE**

**Always disconnect BLACK (-) cable first and reconnect last.**

During assembly/ installation, use the torque values and service products as in the exploded view.

Clean threads before applying a threadlocker. Refer to self-locking fasteners and Loctite application in *Introduction* subsection.

**⚠ WARNING**

**Torque wrench tightening specifications must strictly be adhered to.**
**Locking devices when removed (ex: locking tabs, cotter pin, etc.) must be replaced.**

**NOTICE**

**Hoses, cables or locking ties removed during a procedure must be reinstalled as per factory standards.**

## Procedures

### *Manifold Absolute Pressure and Temperature Sensor (MAPTS)*

This sensor is a multifunction device. It measures manifold absolute pressure and intake temperature for air flow calculations.

### *MAPTS Location*

The MAPTS is located on the intake plenum.

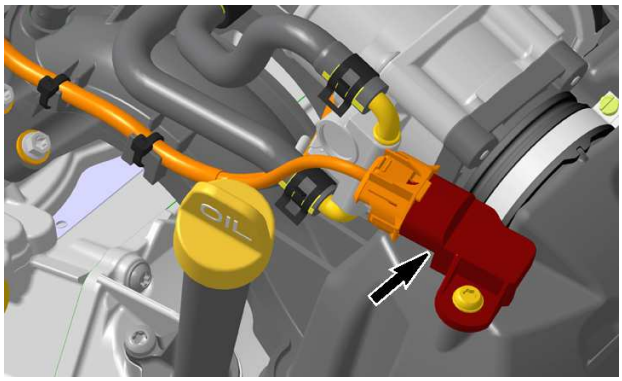


### *MAPTS Pressure Function*

Before the engine is started, when power is applied to the system, the sensor measures the ambient air atmospheric pressure. The ambient pressure is, at that moment, stored in the ECM. Thereafter, once the engine is started, it measures the air pressure in the intake manifold at operating RPMs.

The sensor must be correctly installed on the intake manifold. Otherwise, the MAPTS could generate a fault code for an unexpected sensor range at idle when it reads the atmospheric pressure. If this is the case, remove sensor and check for oil or dirt on its end and if problem persists, check throttle plate condition/position and the wiring harness. Perform the following tests.

### *Testing the MAPTS (Pressure Function)*

1. Connect vehicle to the . BRP diagnostic software (BUDS2)
2. In BUDS2, select the following:
   - Measurements page
   - ECM button
   - Custom tab
   - Manifold Pressure With Altitude Correction.
3. Look for and take note of the MAPTS pressure reading while the engine is stopped.
4. Perform the same test with a new MAPTS and compare both readings.

   Values have to be within ± 3.4 kPa (.5 lbf/in²).

**NOTE:** 1 kPa = 10 hPa.

| MAPTS Pressure Function Quick Test | | | |
|---|---|---|---|
| Result | Service Action | | |
| No Reading | Circuit Continuity Test of MAPTS Pressure Function | MAPTS Input Voltage Test | Repair or Replace Wiring |
| Value Is Out of Range | Replace MAPTS | | |

### *Testing the MAPTS Input Voltage*

1. Remove electrical connector from MAPTS.

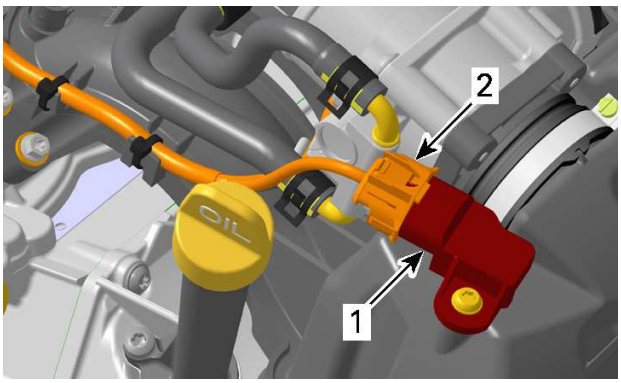


*1. MAPTS*
*2. MAPTS connector to remove*

2. Briefly push START/STOP button.
3. Set multimeter to Vdc, measure for MAPTS input voltage as per following table.

| **Fluke 115 multimeter (P/N 529035868)** |  |
|---|---|

| MAPTS Input Voltage Test | | |
|---|---|---|
| MAPTS Connector Pin | | Specification |
| 1 | 3 | 5 Vdc |

4. If voltage test is good, replace the MAPTS.
5. If voltage test is not good, carry out *Testing the MAPTS Circuit Continuity (Pressure Function)*.

### *Testing the MAPTS Circuit Continuity (Pressure Function)*

1. Install the ECM-A connector on the ECM adapter tool.

| **Fluke 115 multimeter (P/N 529035868)** |  |
|---|---|
| **ECM adapter tool (P/N 529036166)** |  |

2. Check continuity of the following circuits.

| MAPTS Circuit Continuity Test | | |
|---|---|---|
| **ECM Adapter Pin** | **MAPTS Connector Pin** | **Specification** |
| B4 | 3 | Close to 0 Ω |
| G4 | 4 | |
| H2 | 1 | |

3. If resistance is not within specification, repair or replace the wiring harness between ECM connector and the MAPTS.

### *MAPTS Temperature Function*

The MAPTS also monitors the temperature of the air in the intake manifold.

### *Quick Testing the MAPTS (Temperature Function)*

1. Connect the vehicle to the BRP diagnostic software (BUDS2).
2. In BUDS2, select the following:
   - **Measurement** page
   - **ECM** button
   - **Custom** tab.
3. Look for Intake Temperature reading while the engine is stopped.
4. Perform the same test with a new MAPTS and compare both readings.

**NOTE:** Both sensors must feel the same ambient air temperature.

5. If the engine's MAPTS temperature reading is significantly different than the new MAPTS, replace it.
6. If there is no reading, carry out *Testing the MAPTS Resistance (Temperature Function)*.

### *Testing the MAPTS Resistance (Temperature Function)*

1. Disconnect the MAPTS connector.
2. Test MAPTS resistance at the sensor as per following tables.

| MAPTS Resistance Test | | |
|---|---|---|
| MAPTS Pin | | Specification |
| 1 | 2 | Refer to MAPTS Temperature Sensor Table |

| MAPTS Temperature Sensor Table | | |
|---|---|---|
| Temperature | | Ω |
| °C | °F | MAPTS |
| - 40 | - 40 | 40528 to 56935 |
| - 10 | - 14 | 8103 to 10919 |
| 20 | 68 | 2193 to 2863 |
| 80 | 176 | 294 to 368 |
| 120 | 248 | 98 to 122 |

3. If resistance is not within specification, replace the MAPTS.
4. If resistance tests good, reconnect the MAPTS and proceed with the following steps.
5. Install ECM-A connector on the ECM adapter tool.

| | |
|---|---|
| **Fluke 115 multimeter (P/N 529035868)** |  |
| **ECM adapter tool (P/N 529036166)** |  |

6. Recheck resistance value as per following table.

| MAPTS Resistance Test at ECM | | |
|---|---|---|
| ECM Adapter Pin | | Specification |
| H2 | H3 | Refer to MAPTS Temperature Sensor Table |

| MAPTS Temperature Sensor Test Results | | | |
|---|---|---|---|
| Result | Service Action | | |
| No Reading | Circuit Continuity Test of MAPTS Temp. Function | MAPTS Input Voltage Test | Repair or Replace Wiring |

| MAPTS Temperature Sensor Test Results | |
|---|---|
| Incorrect Resistance Value | Check condition of connector pins, replace MAPTS |
| Correct Resistance Value | Try a new ECM |

### *Testing the MAPTS Circuit Continuity (Temperature Function)*

| MAPTS Circuit Continuity Test (Temperature Function) | | |
|---|---|---|
| ECM Adapter Pin | MAPTS Connector Pin | Specification |
| H2 | 1 | Close to 0 Ω |
| H3 | 2 | |

Repair or replace wiring as required.

### *Replacing the MAPTS*

1. Disconnect MAPTS connector and remove the MAPTS from the intake manifold.

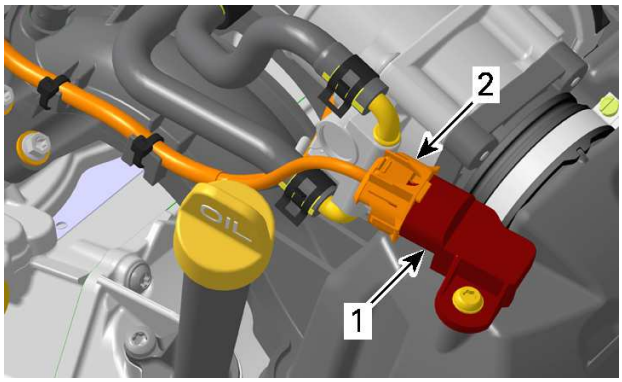


*1. MAPTS*
*2. MAPTS connector*

2. Install new MAPTS as per following table.

| Tightening Torque | |
|---|---|
| MAPTS retaining screw | 4.5 ± 0.5 Nm (40 ± 4 lbf-in) |

### *Intake Manifold*

### *Intake Manifold Access*

Refer to appropriate subsections and remove:

– Upper body module
– Fuel tank
– Driven pulley and countershaft.

### *Removing the Intake Manifold*

1. Loosen clamp securing breather hose to engine and disconnect hose.

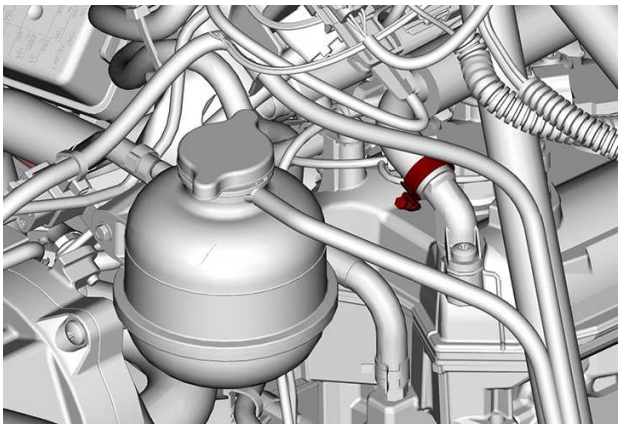

2. Loosen clamp securing air intake hose to connecting socket.

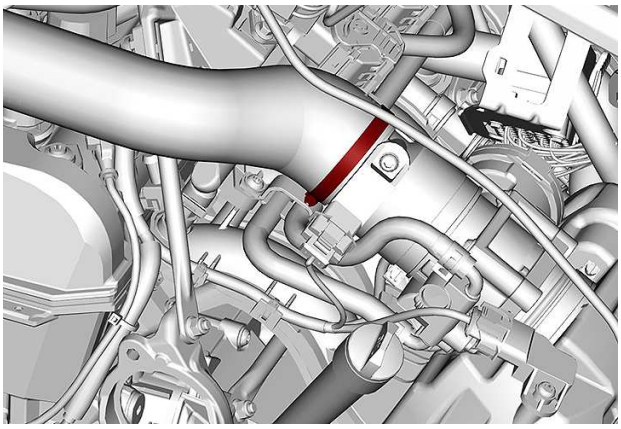

3. Remove air intake hose.

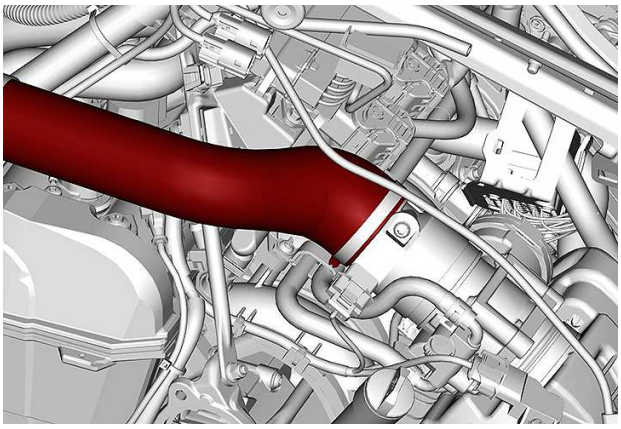

4. Cut locking ties securing the MAPTS and the ETC harness to the intake manifold.

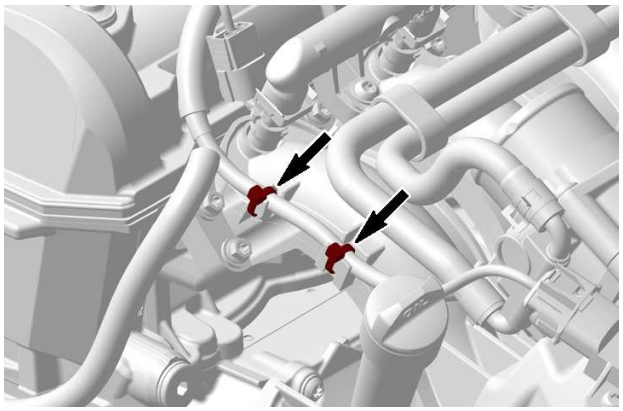

*TYPICAL*

5. Disconnect MAPTS and ETC and BPS connectors.

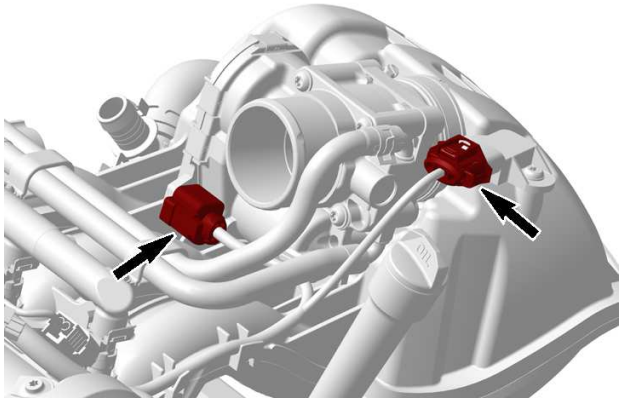

*900 ACE ENGINE SHOWN*

6. Disconnect both ECM connectors

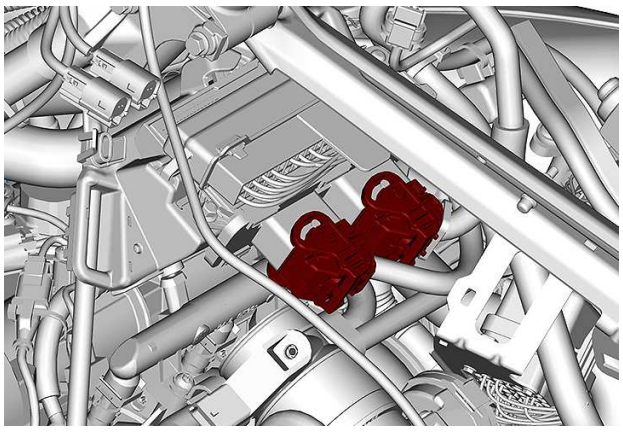

7. ***900 ACE Models***
8. Remove screws securing fuel rail and coolant hoses to intake manifold.

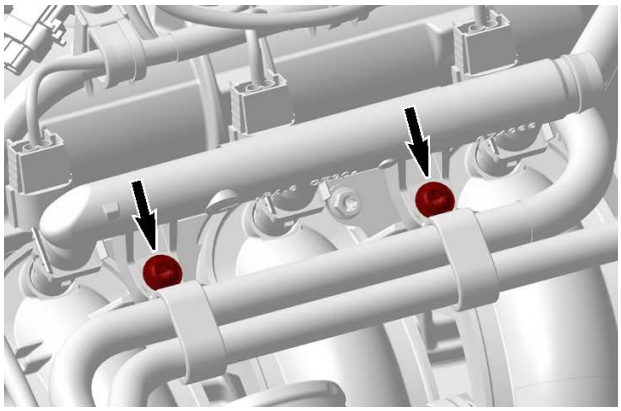

*900 ACE ENGINE SHOWN*

9. ***All Models***
10. Block coolant hoses connected to throttle body.

| | |
|---|---|
| **Small hose pincher (P/N 295000076)** |  |

11. Disconnect and remove coolant hoses from throttle body.

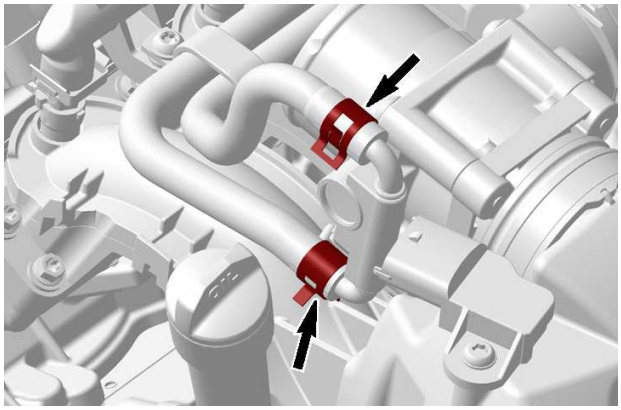

*900 ACE ENGINE SHOWN*

12. Disconnect fuel injector connectors.

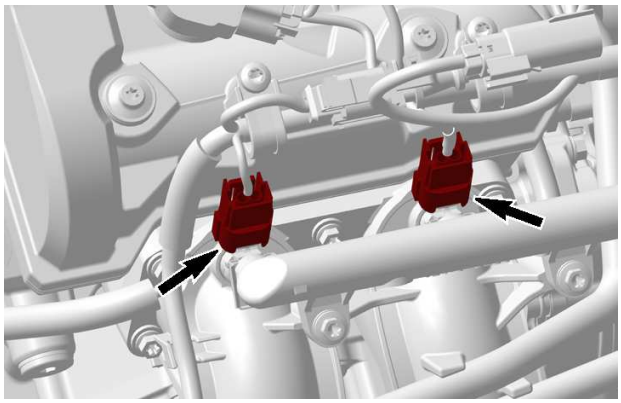

*600 ACE ENGINE*

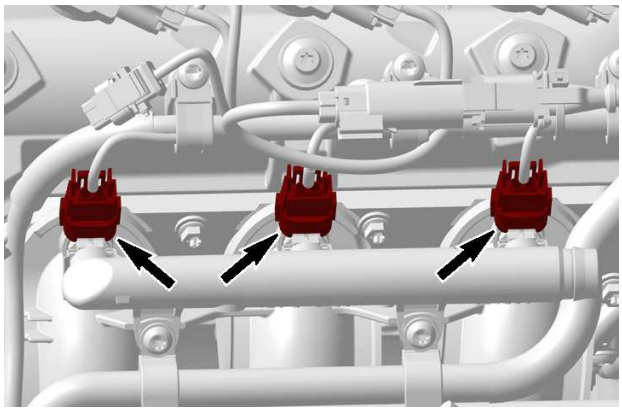

*900 ACE ENGINE*

13. Remove intake manifold screws and ground connector.

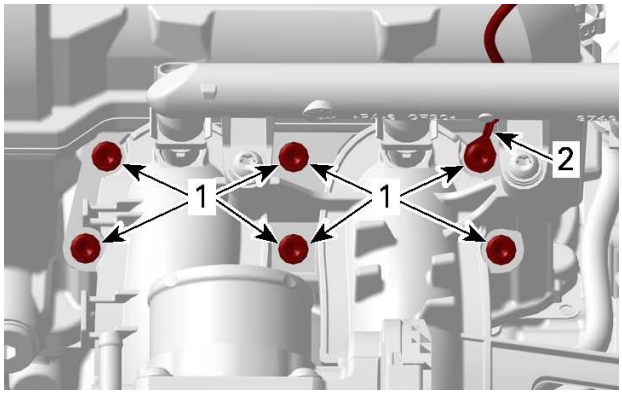


*600 ACE ENGINE*
1. *Intake manifold screws*
2. *Ground connector*

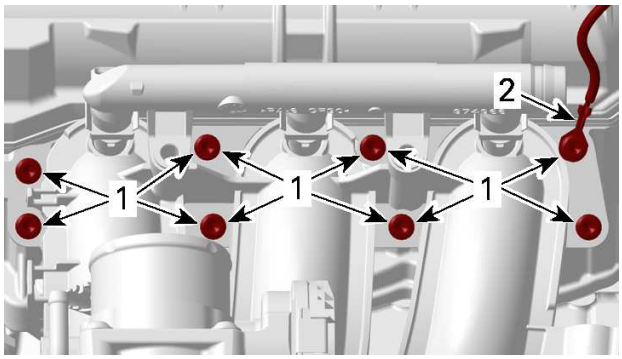


*900 ACE ENGINE*
1. *Intake manifold screws*
2. *Ground connector*

14. Remove intake manifold from engine.
15. Remove and discard intake manifold gaskets.
16. If required, refer to *Electronic Fuel Injection (EFI) - GEN1* subsection and remove the following parts from intake manifold:

    – Throttle body with connecting socket
    – Fuel rail with injectors.

### *Inspecting the Intake Manifold*

1. Check intake manifold for cracks, warping at flanges or any other visible damage. Replace as required.
2. Drain intake manifold of any accumulated liquids.
3. Flush intake manifold with solvent and let dry.
4. Check rubber grommets if brittle, hard or damaged. Replace as required.

### *Inspecting the Connecting Socket*

1. Check connecting socket if brittle, hard, or otherwise damaged. Replace as required.
2. Check warping at flanges.
3. Replace as required.

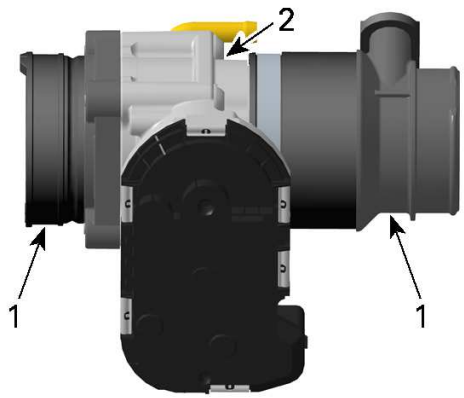


1. *Connecting sockets*
2. *Throttle body*

### *Installing the Intake Manifold*

The installation is the reverse of the removal procedure. However, pay attention to the following.

1. If removed, refer to *Electronic Fuel Injection (EFI) - GEN1* subsection to install:
   - Fuel rail with injectors.
2. Install NEW gaskets with tab properly inserted in notch.

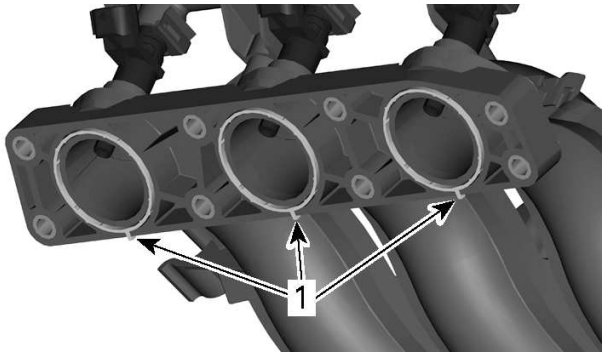


***TYPICAL - 900 ACE ENGINE SHOWN***

1. *Gaskets tab properly inserted*

3. Ensure rubber grommets are properly inserted.



***TYPICAL - 900 ACE ENGINE SHOWN***

4. Ensure rubber grommets are properly inserted.

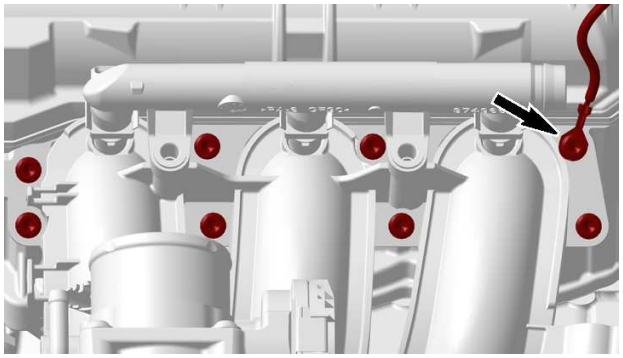

***TYPICAL - 900 ACE ENGINE SHOWN***

5. Install ground connector to intake manifold..

| Tightening Torque | |
|---|---|
| Intake manifold screws | 9 ± 1 Nm<br>(80 ± 9 lbf-in) |

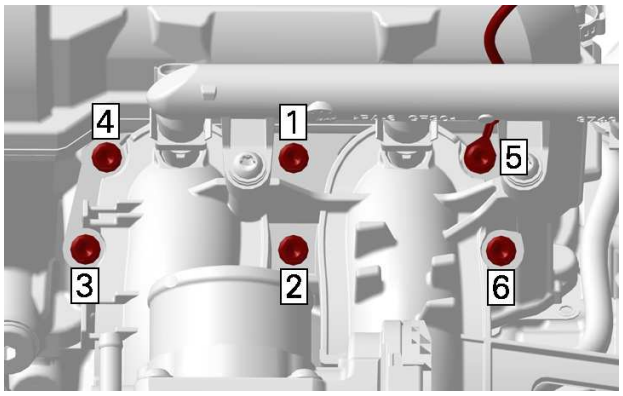


***600 ACE ENGINE - TIGHTENING SEQUENCE***

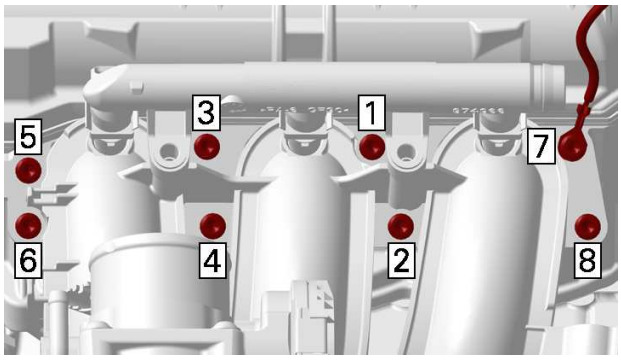


*900 ACE ENGINE - TIGHTENING SEQUENCE*

6. If removed, install throttle body on connecting sockets.
7. Make sure to index intake manifold pin with throttle body positioning bore.

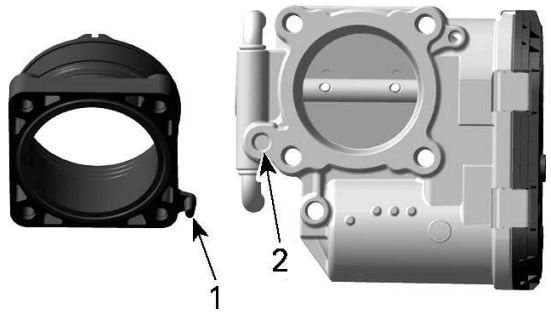


1. *Intake manifold pin*
2. *Throttle body positioning bore*

8. Tighten throttle body screws to specification as per the following sequence.

| Tightening Torque | |
|---|---|
| Throttle body screws | 9 ± 1 Nm<br>(80 ± 9 lbf-in) |

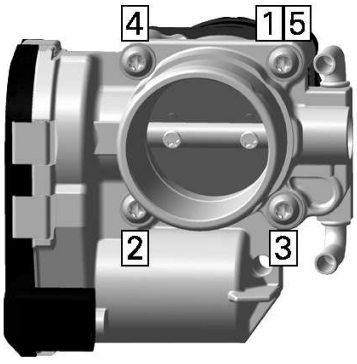


*TIGHTENING SEQUENCE*

9. Make sure to index connecting socket notch with the intake manifold tab.

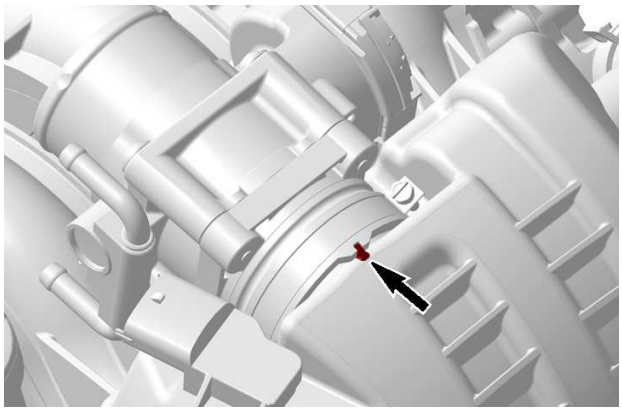

*900 ACE ENGINE SHOWN - INTAKE MANIFOLD TAB*

10. Install connecting socket clamp in proper position and tighten to specification.

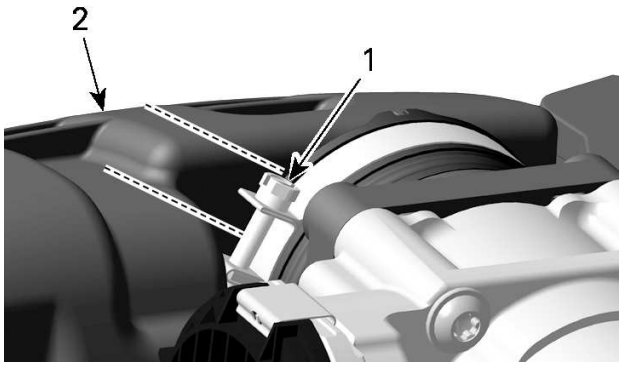


*TYPICAL - ALLOWED POSITION OF CLAMP SCREW*

1. *Screw of clamp*
2. *Intake manifold*

| Tightening Torque | |
|---|---|
| Connecting socket clamp | 4 ± 0.5 Nm<br>(35 ± 4 lbf-in) |

# Intake Manifold - GEN2

## SERVICE TOOLS

| Description | Part Number | Page |
|---|---|---|
| ECM ADAPTER TOOL GEN2 | (P/N 529036513) | 14–15 |
| FLUKE 115 MULTIMETER | (P/N 529035868) | 14–15 |
| SMALL HOSE PINCHER | (P/N 295000076) | 17 |

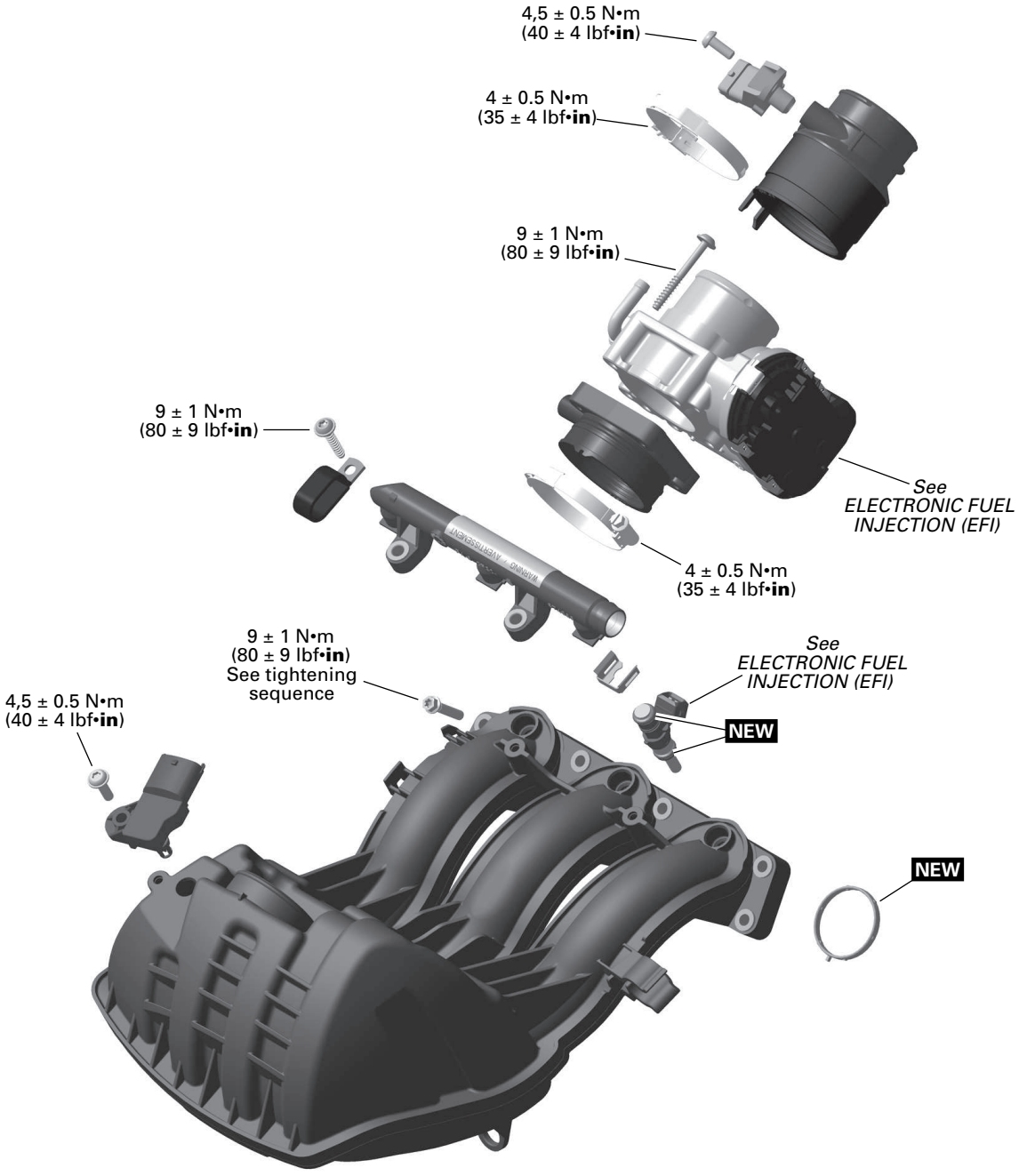


**NEW** = Component must be replaced when removed.

## General

This section refers to the following ECM:

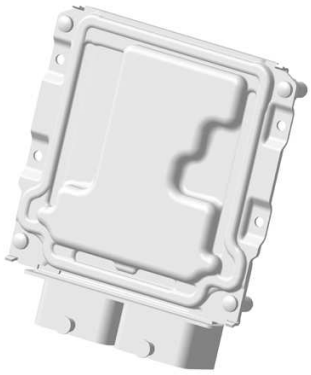

*ECM GEN2 – XCU*

During the assembly or the installation, use the torque values and service products as in the exploded views.

**⚠ WARNING**

**Torque wrench tightening specifications must be strictly adhered to. Locking devices when removed (e.g.: locking tabs, elastic stop nuts, cotter pins, etc.) must be replaced with new ones.**

**NOTICE**

**Hoses, cables or locking ties removed during a procedure must be reinstalled as per factory standards.**

## Procedures

### *Manifold Absolute Pressure and Temperature Sensor (MAPTS)*

This sensor is a multifunction device. It measures manifold absolute pressure and intake temperature for air flow calculations.

### *MAPTS Location*

The MAPTS is located on the intake plenum.

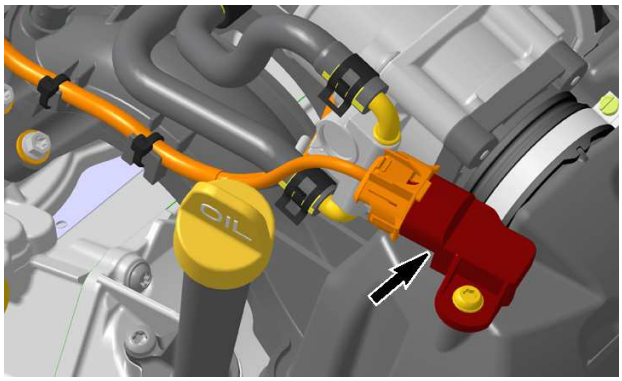


### *MAPTS Pressure Function*

Before the engine is started, when power is applied to the system, the sensor measures the ambient air atmospheric pressure. The ambient pressure is, at that moment, stored in the ECM. Thereafter, once the engine is started, it measures the air pressure in the intake manifold at operating RPMs.

The sensor must be correctly installed on the intake manifold. Otherwise, the MAPTS could generate a fault code for an unexpected sensor range at idle when it reads the atmospheric pressure. If this is the case, remove sensor and check for oil or dirt on its end and if problem persists, check throttle plate condition/position and the wiring harness. Perform the following tests.

### *Testing the MAPTS (Pressure Function)*

1. Connect vehicle to the BRP diagnostic software (BUDS2).
2. In BUDS2, select the following:
   - –
   - Measurements page
   - ECM button
   - Custom tab
   - Manifold Pressure With Altitude Correction.
3. Look for and take note of the MAPTS pressure reading while the engine is stopped.
4. Perform the same test with a new MAPTS and compare both readings.

   Values have to be within ± 3.4 kPa (.5 lbf/in²).

**NOTE:** 1 kPa = 10 hPa.

| MAPTS Pressure Function Quick Test | | | |
|---|---|---|---|
| Result | Service Action | | |
| No Reading | Circuit Continuity Test of MAPTS Pressure Function | MAPTS Input Voltage Test | Repair or Replace Wiring |
| Value Is Out of Range | Replace MAPTS | | |

### *Testing the MAPTS Input Voltage*

1. Remove electrical connector from MAPTS.

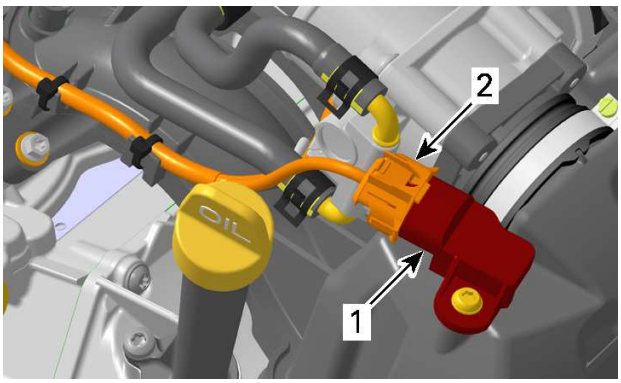


*1. MAPTS*
*2. MAPTS connector to remove*

2. Briefly push START/STOP button.
3. Set multimeter to Vdc, measure for MAPTS input voltage as per following table.

| **Fluke 115 multimeter (P/N 529035868)** |  |
|---|---|

| MAPTS Input Voltage Test | | |
|---|---|---|
| MAPTS Connector Pin | | Specification |
| 1 | 3 | 5 Vdc |

4. If voltage test is good, replace the MAPTS.
5. If voltage test is not good, carry out *Testing the MAPTS Circuit Continuity (Pressure Function)*.

### *Testing the MAPTS Circuit Continuity (Pressure Function)*

1. Disconnect the ECM-13 connector.
2. Install ECM-13 connector on ECM adapter tool.

| **ECM adapter tool GEN2 (P/N 529036513)** |  |
|---|---|

3. Check continuity of the following circuits.

| **Fluke 115 multimeter (P/N 529035868)** |  |
|---|---|

| MAPTS Circuit Continuity Test | | |
|---|---|---|
| **ECM Adapter Pin** | **MAPTS Connector Pin** | **Specification** |
| 2 | 3 | Close to 0 Ω |
| 42 | 4 | |
| 27 | 1 | |

4. If resistance is not within specification, repair or replace the wiring harness between ECM connector and the MAPTS.

### *MAPTS Temperature Function*

The MAPTS also monitors the temperature of the air in the intake manifold.

### *Quick Testing the MAPTS (Temperature Function)*

1. Connect the vehicle to the BRP diagnostic software (BUDS2).
2. In BUDS2, select the following:
   - **Measurement** page
   - **ECM** button
   - **Custom** tab.
3. Look for **Intake Temperature** reading while the engine is stopped.
4. Perform the same test with a new MAPTS and compare both readings.
5. If the engine's MAPTS temperature reading is significantly different than the new MAPTS, replace it.

**NOTE:** Both sensors must feel same ambient air temperature.

6. If there is no reading, carry out *Testing the MAPTS Resistance (Temperature Function)*.

### *Testing the MAPTS Resistance (Temperature Function)*

1. Disconnect the MAPTS connector.

2. Test MAPTS resistance at the sensor as per following tables.

| Fluke 115 multimeter (P/N 529035868) |  |
|---|---|

| MAPTS Resistance Test | | |
|---|---|---|
| MAPTS Pin | | Specification |
| 1 | 2 | Refer to MAPTS Temperature Sensor Table |

| MAPTS Temperature Sensor Table | | |
|---|---|---|
| Temperature | | Ω |
| °C | °F | MAPTS |
| - 40 | - 40 | 40528 to 56935 |
| - 10 | - 14 | 8103 to 10919 |
| 20 | 68 | 2193 to 2863 |
| 80 | 176 | 294 to 368 |
| 120 | 248 | 98 to 122 |

3. If resistance is not within specification, replace the MAPTS.
4. If resistance tests good, reconnect the MAPTS and proceed with the following steps.
5. Install ECM-13 connector on the ECM adapter tool.

| ECM adapter tool GEN2 (P/N 529036513) |  |
|---|---|

6. Recheck resistance value as per following table.

| MAPTS Resistance Test at ECM | | |
|---|---|---|
| ECM Adapter Pin | | Specification |
| 27 | 31 | Refer to MAPTS Temperature Sensor Table |

| MAPTS Temperature Sensor Test Results | | | |
|---|---|---|---|
| Result | Service Action | | |
| No Reading | Circuit Continuity Test of MAPTS Temp. Function | MAPTS Input Voltage Test | Repair or Replace Wiring |
| Incorrect Resistance Value | Check condition of connector pins, replace MAPTS | | |
| Correct Resistance Value | Try a new ECM | | |

### *Testing the MAPTS Circuit Continuity (Temperature Function)*

| MAPTS Circuit Continuity Test (Temperature Function) | | |
|---|---|---|
| ECM Adapter Pin | MAPTS Connector Pin | Specification |
| 13-27 | 1 | Close to 0 Ω |
| 13-31 | 2 | |

Repair or replace wiring as required.

### *Replacing the MAPTS*

1. Disconnect MAPTS connector and remove the MAPTS from the intake manifold.

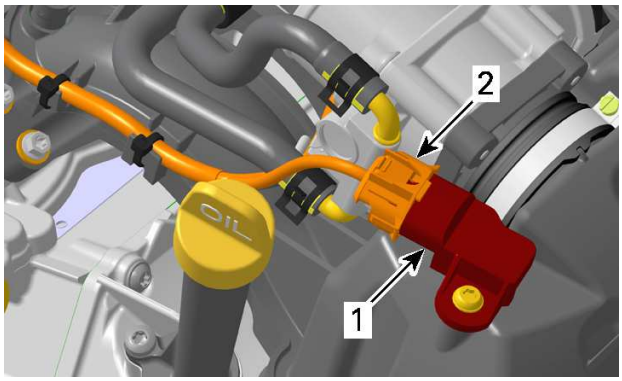


*1. MAPTS*
*2. MAPTS connector*

2. Install new MAPTS as per following table.

| Tightening Torque | |
|---|---|
| MAPTS retaining screw | 4.5 ± 0.5 Nm (40 ± 4 lbf-in) |

T

### *Intake Manifold*

#### *Intake Manifold Access*

Refer to appropriate subsections and remove:

– Upper body module
– Fuel tank
– Driven pulley and countershaft.

#### *Removing the Intake Manifold*

1. Loosen clamp securing breather hose to engine and disconnect hose.

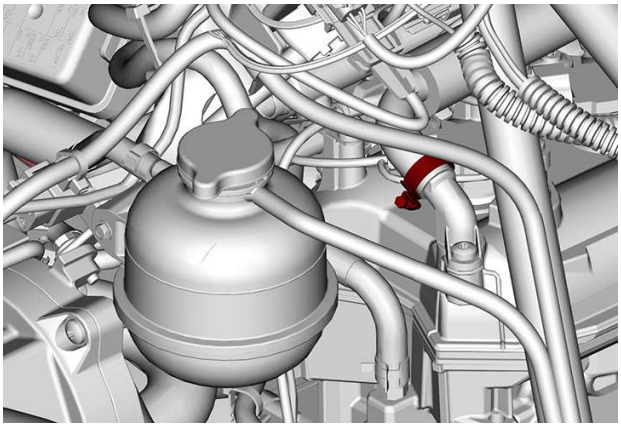

2. Loosen clamp securing air intake hose to connecting socket.

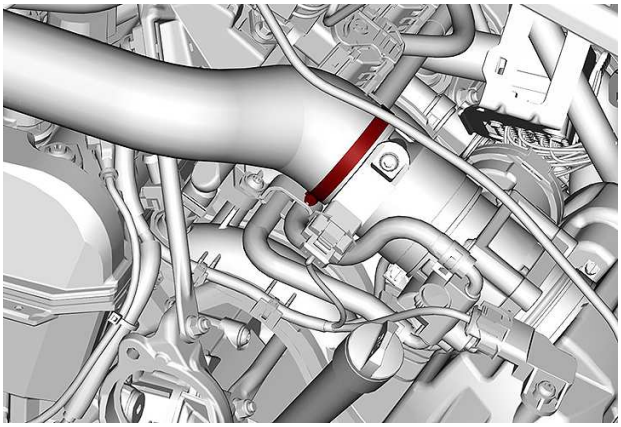

3. Remove air intake hose.

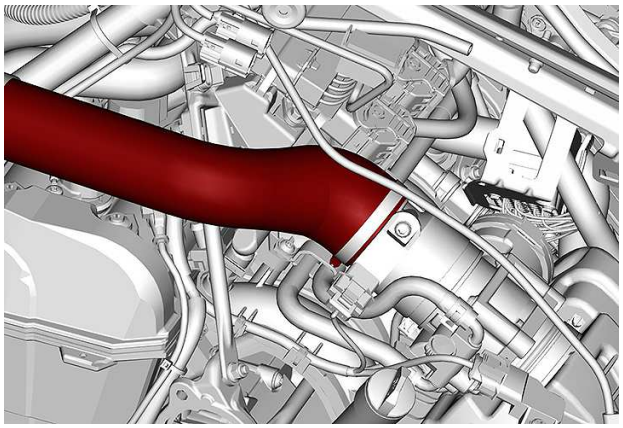

4. Cut locking ties securing MAPTS , BPS and ETC harness to intake manifold.

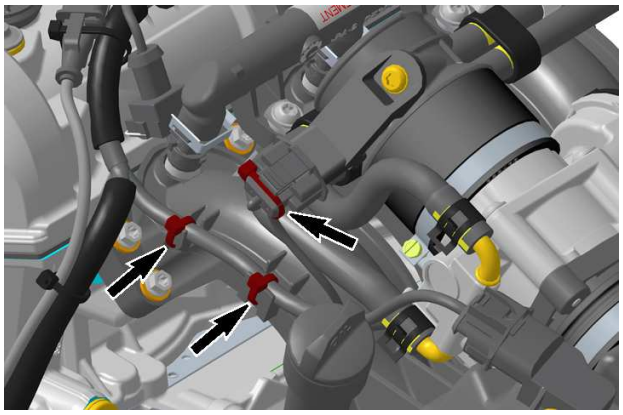

*TYPICAL*

5. Disconnect MAPTS, BPS and ETC connectors.

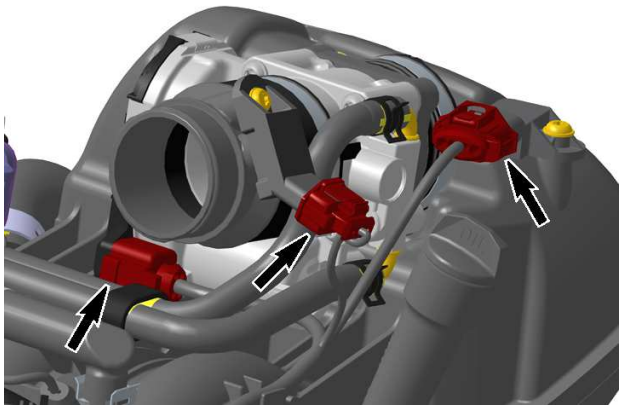

6. Remove screws securing fuel rail and coolant hoses to intake manifold.

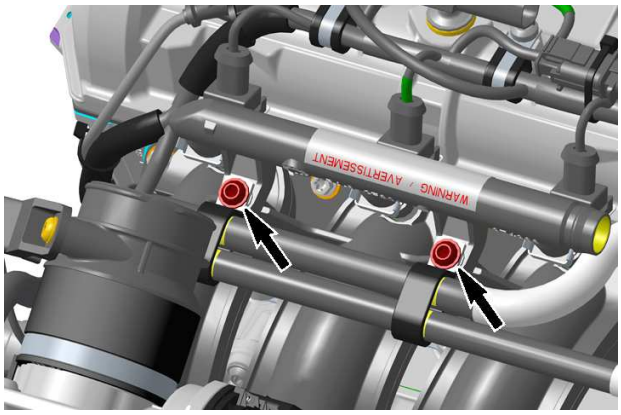

7. Block coolant hoses connected to throttle body.

| | |
|---|---|
| **Small hose pincher (P/N 295000076)** |  |

8. Disconnect and remove coolant hoses from throttle body.

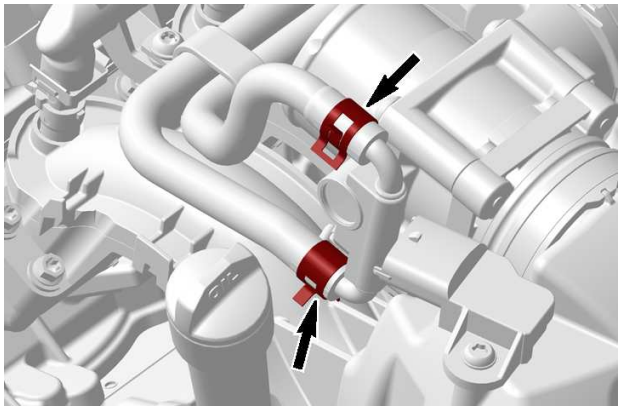

9. Disconnect fuel injector connectors.

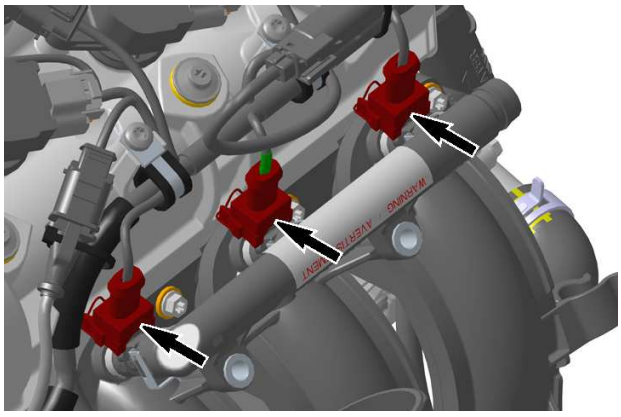

10. Remove intake manifold screws and ground connector.

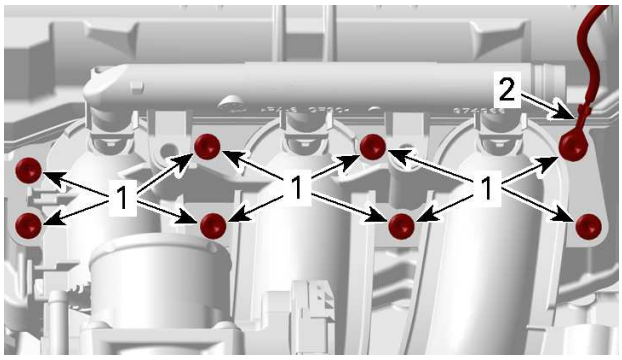


*1. Intake manifold screws*
*2. Ground connector*

11. Remove intake manifold from engine.
12. Remove and discard intake manifold gaskets.
13. If required, refer to *Electronic Fuel Injection (EFI) - GEN2* subsection and remove the following parts from intake manifold:
    - Throttle body with connecting socket
    - Fuel rail with injectors.

### *Inspecting the Intake Manifold*

1. Check intake manifold for cracks, warping at flanges or any other visible damage. Replace as required.
2. Drain intake manifold of any accumulated liquids.
3. Flush intake manifold with solvent and let dry.
4. Check rubber grommets if brittle, hard or damaged. Replace as required.

### *Inspecting the Connecting Socket*

1. Check connecting socket if brittle, hard, or otherwise damaged. Replace as required.
2. Check warping at flanges.
3. Replace as required.

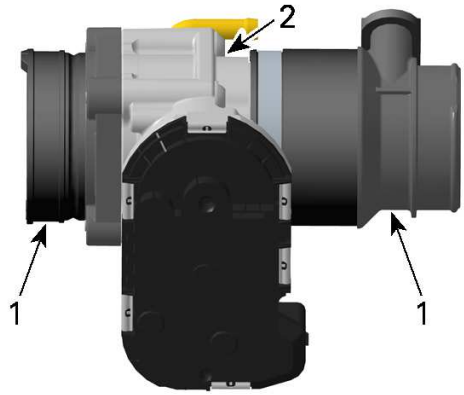


*1. Connecting sockets*
*2. Throttle body*

### *Installing the Intake Manifold*

The installation is the reverse of the removal procedure. However, pay attention to the following.

If removed, refer to *Electronic Fuel Injection (EFI) - GEN2* subsection to install:

– Fuel rail with injectors.

1. Install **NEW** gaskets with tab properly inserted in notch.

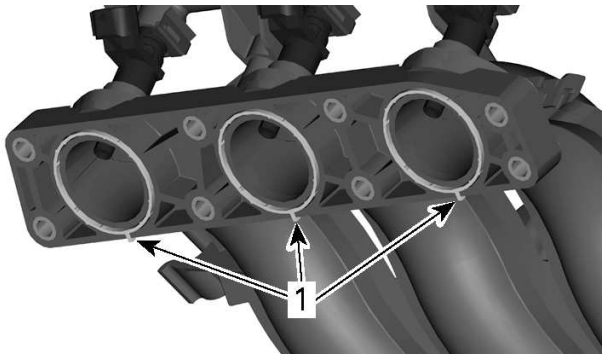


*1. Gaskets tab properly inserted*

2. Ensure rubber grommets are properly inserted.



3. Install ground connector on intake manifold.

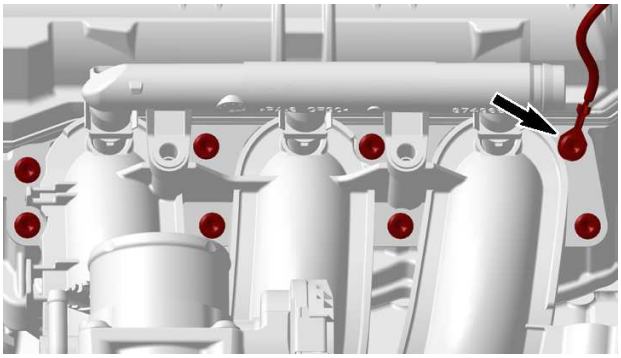

4. Tighten intake manifold screws to specification as per the following sequence.

| Tightening Torque | |
|---|---|
| Intake manifold screws | 9 ± 1 Nm<br>(80 ± 9 lbf-in) |

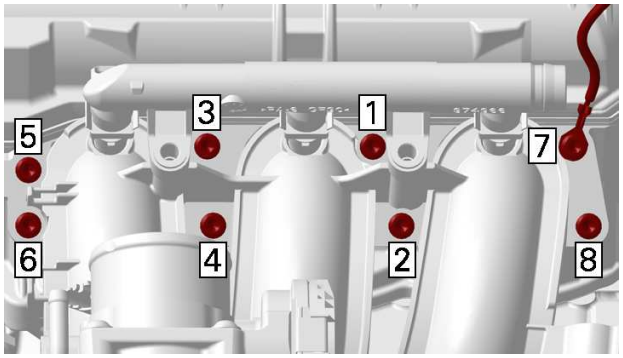


***TYPICAL - TIGHTENING SEQUENCE***

5. If removed, install throttle body on connecting sockets.
6. Make sure to index intake manifold pin with throttle body positioning bore.

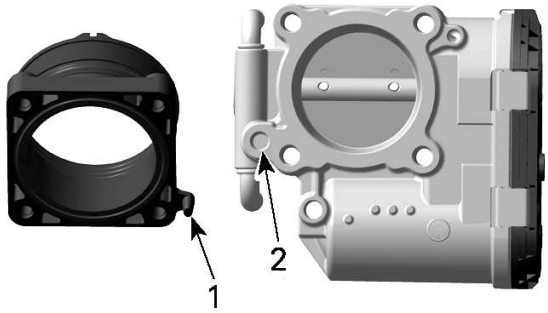


*1. Intake manifold pin*
*2. Throttle body positioning bore*

7. Tighten throttle body screws to specification as per the following sequence.

| Tightening Torque | |
|---|---|
| Throttle body screws | 9 ± 1 Nm<br>(80 ± 9 lbf-in) |

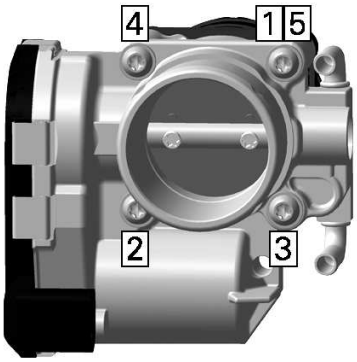


*TIGHTENING SEQUENCE*

8. Install connecting socket clamp on connecting socket.
9. Make sure to index connecting socket correctly at the throttle body.

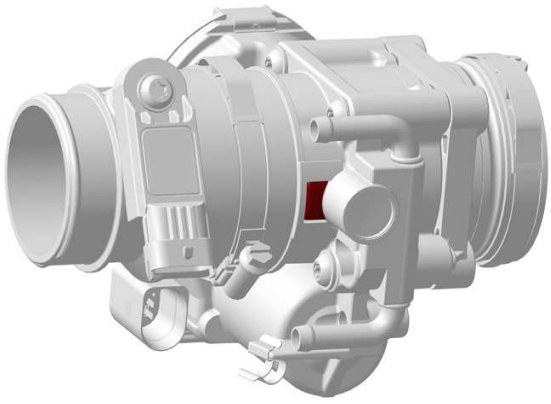

10. Tighten connecting socket clamp to specification.

| Tightening Torque | |
|---|---|
| Connecting socket clamp | 4 ± 0.5 Nm (35 ± 4 lbf-in) |

11. Make sure to index connecting socket notch with the intake manifold tab.

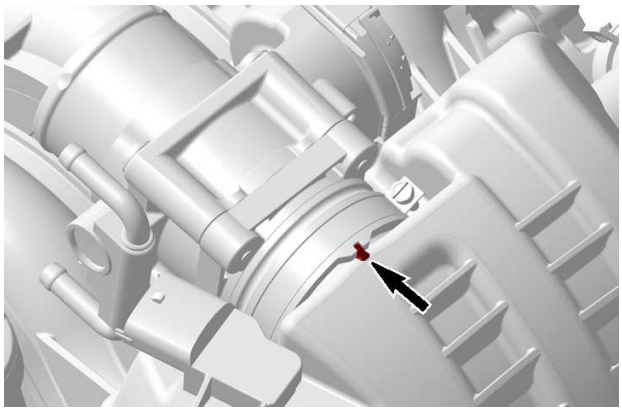

*INTAKE MANIFOLD TAB*

12. Install connecting socket clamp in proper position and tighten to specification.

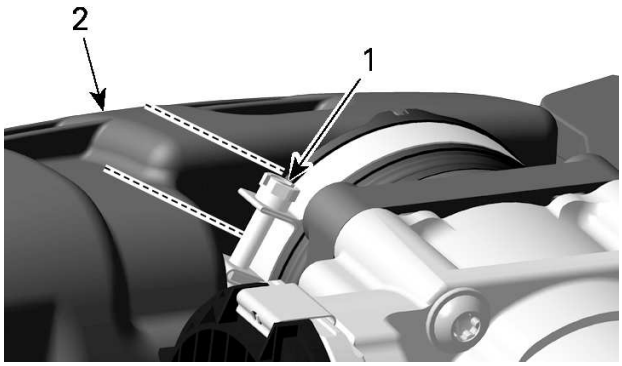


*TYPICAL - ALLOWED POSITION OF CLAMP SCREW*
1. *Screw of clamp*
2. *Intake manifold*

| Tightening Torque | |
|---|---|
| Connecting socket clamp | 4 ± 0.5 Nm (35 ± 4 lbf-in) |

# Exhaust Manifold – 600 ACE

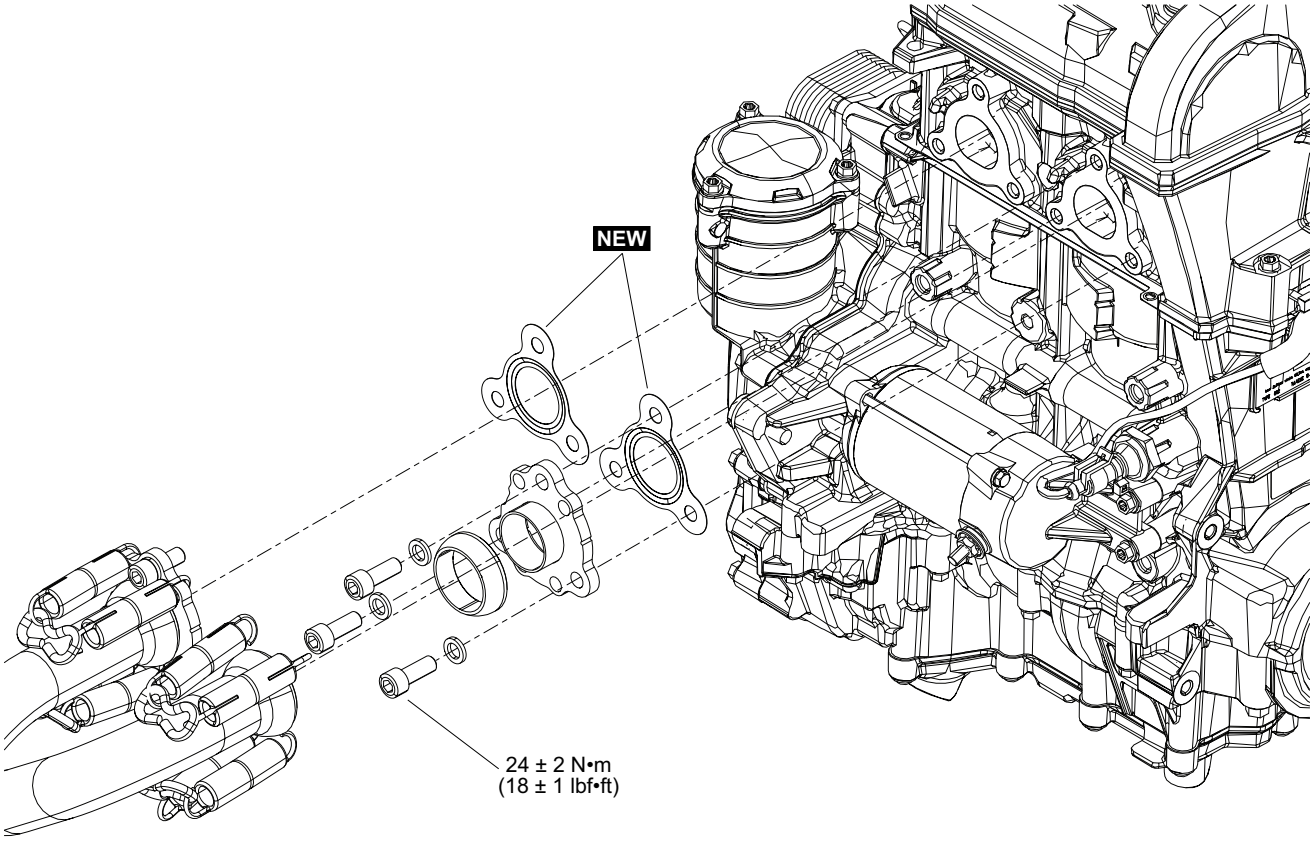


**NEW** = Component must be replaced when removed.

## General

**⚠ WARNING**

**To avoid potential burns, never touch exhaust system components immediately after the engine has been running because these components are very hot. Let engine and exhaust system cool down before performing any servicing.**

## Procedures

### *Exhaust Manifold*

#### *Removing the Exhaust Manifold*

1. Remove following fasteners.

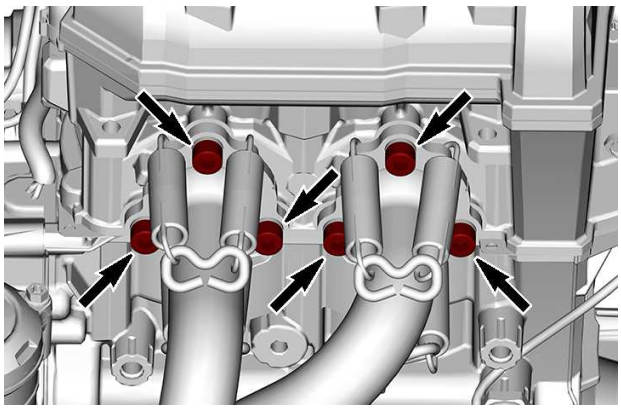

2. Remove exhaust manifold.
3. Remove and discard exhaust manifold gaskets.

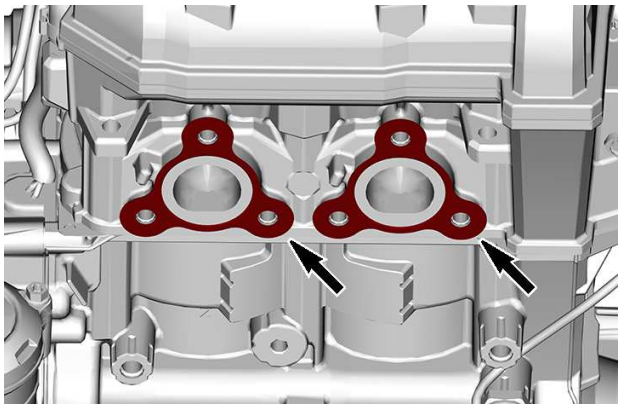

#### *Inspecting the Exhaust Manifold*

Check if the manifold is cracked or damaged. Replace if necessary.

#### *Installing the Exhaust Manifold*

1. Install **NEW** exhaust manifold gaskets as shown.

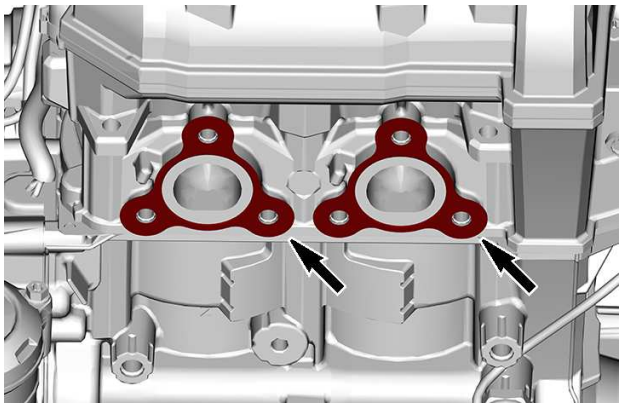

2. Install the exhaust manifold with its screws and tighten them to specification.

**NOTICE**

**Do not use an impact wrench to tighten exhaust manifold screws.**

| Tightening Torque | |
|---|---|
| Step A | 7 ± 1 Nm<br>(62 ± 9 lbf-in) |
| Step B | 24 ± 2 Nm<br>(18 ± 1 lbf-ft) |

# Exhaust Manifold – 900 ACE

Midwest Manuals
Green Manuals
Paperless Manuals
For a Better Tomorrow
www.greenmanuals.com
If you bought this manual from any other seller please leave them NEGATIVE feedback and notify us at bestshopmanuals@gmail.com

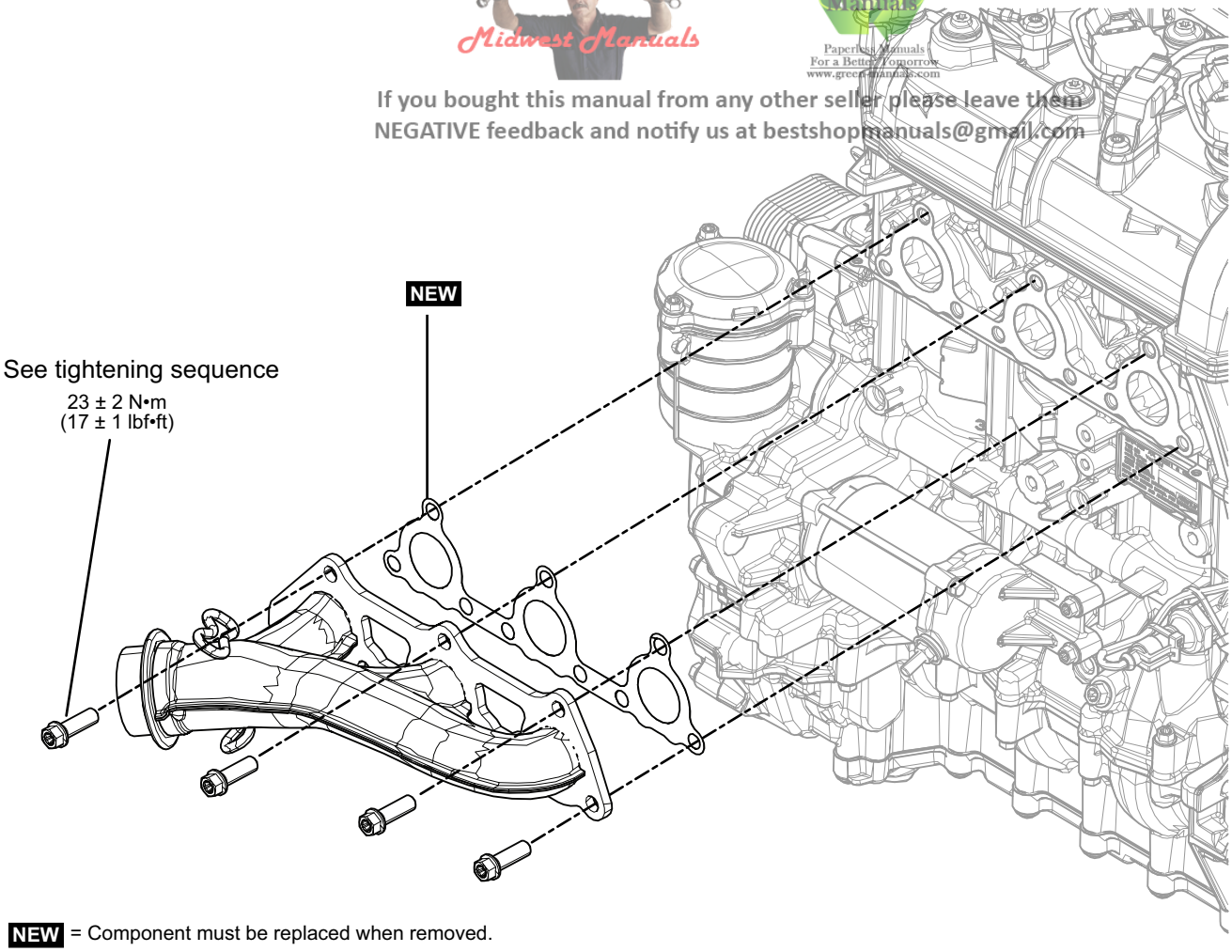


**NEW** = Component must be replaced when removed.

## General

**⚠ WARNING**

**To avoid potential burns, never touch exhaust system components immediately after the engine has been running because these components are very hot. Let engine and exhaust system cool down before performing any servicing.**

## Procedures

### *Exhaust Manifold*

#### *Removing the Exhaust Manifold*

1. Remove exhaust manifold screws (9).

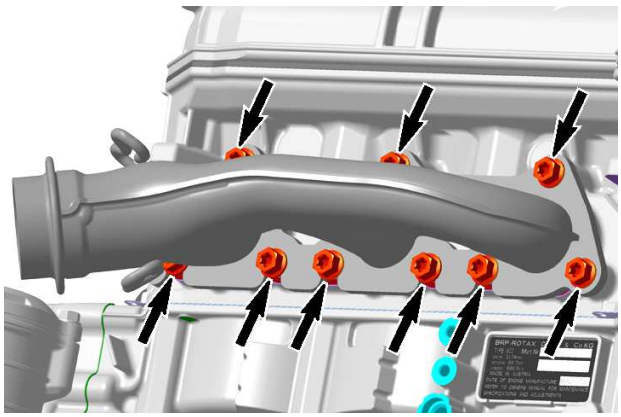

2. Remove exhaust manifold.
3. Remove and discard exhaust manifold gasket.

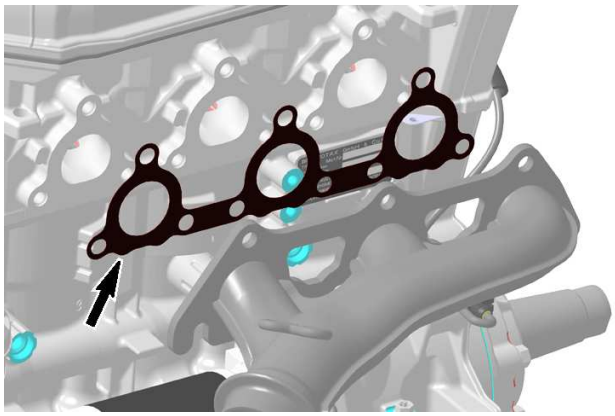

#### *Inspecting the Exhaust Manifold*

Check if the manifold is cracked or damaged. Replace if necessary.

#### *Installing the Exhaust Manifold*

1. Install **NEW** exhaust manifold gasket and exhaust manifold screws as shown.

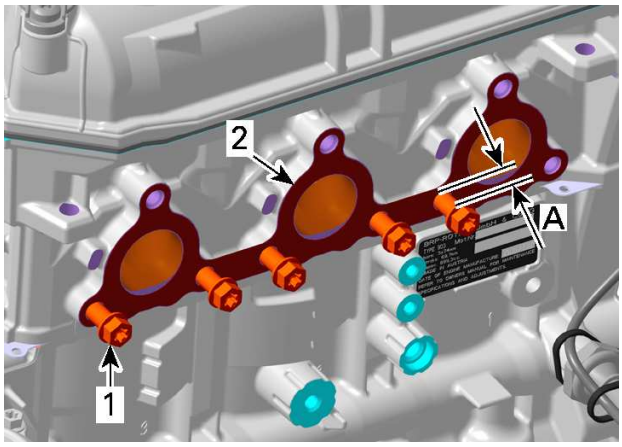


*1. Exhaust manifold screws*
*2. Gasket*
*A. 15 mm (.6 in)*

2. Fit the exhaust manifold on the previously installed screws.

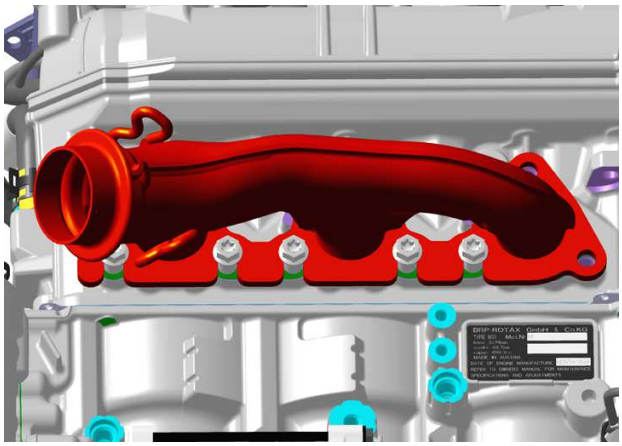

3. Install the remaining exhaust manifold screws and tighten them to specification as per the following tightening sequence .

**NOTICE**

**Do not use an impact wrench to tighten exhaust manifold screws.**

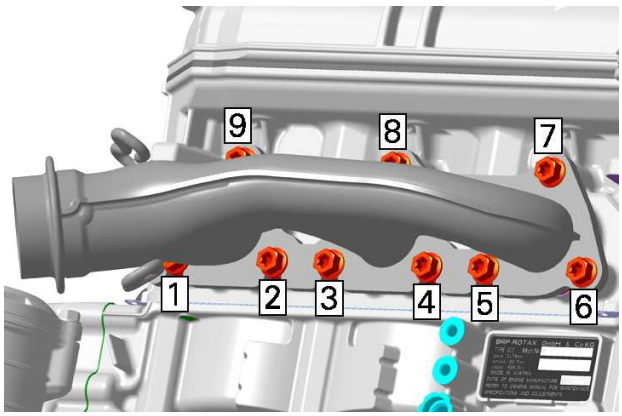


*TIGHTENING SEQUENCE*

## Engine

| Tightening Torque | |
|---|---|
| Step A | 5 ± 0.5 Nm<br>(44 ± 4 lbf-in) |
| Step B | 23 ± 2 Nm<br>(17 ± 1 lbf-ft) |

# Turbocharger



## SERVICE TOOLS

| Description | Part Number | Page |
|---|---|---|
| ADAPTER GAUGE (TURBO) | (P/N 529036461) | 40 |
| ECM ADAPTER TOOL GEN2 | (P/N 529036513) | 28 |
| ENGINE LEAK DOWN TEST KIT | (P/N 529035661) | 40 |
| FLUKE 115 MULTIMETER | (P/N 529035868) | 28–29 |
| PLUG (TURBO) | (P/N 529036460) | 40 |
| VACUUM/PRESSURE PUMP | (P/N 529021800) | 42 |

## SERVICE PRODUCTS

| Description | Part Number | Page |
|---|---|---|
| ENGINE OIL | | 36 |
| LOCTITE 243 (BLUE) | | 36 |

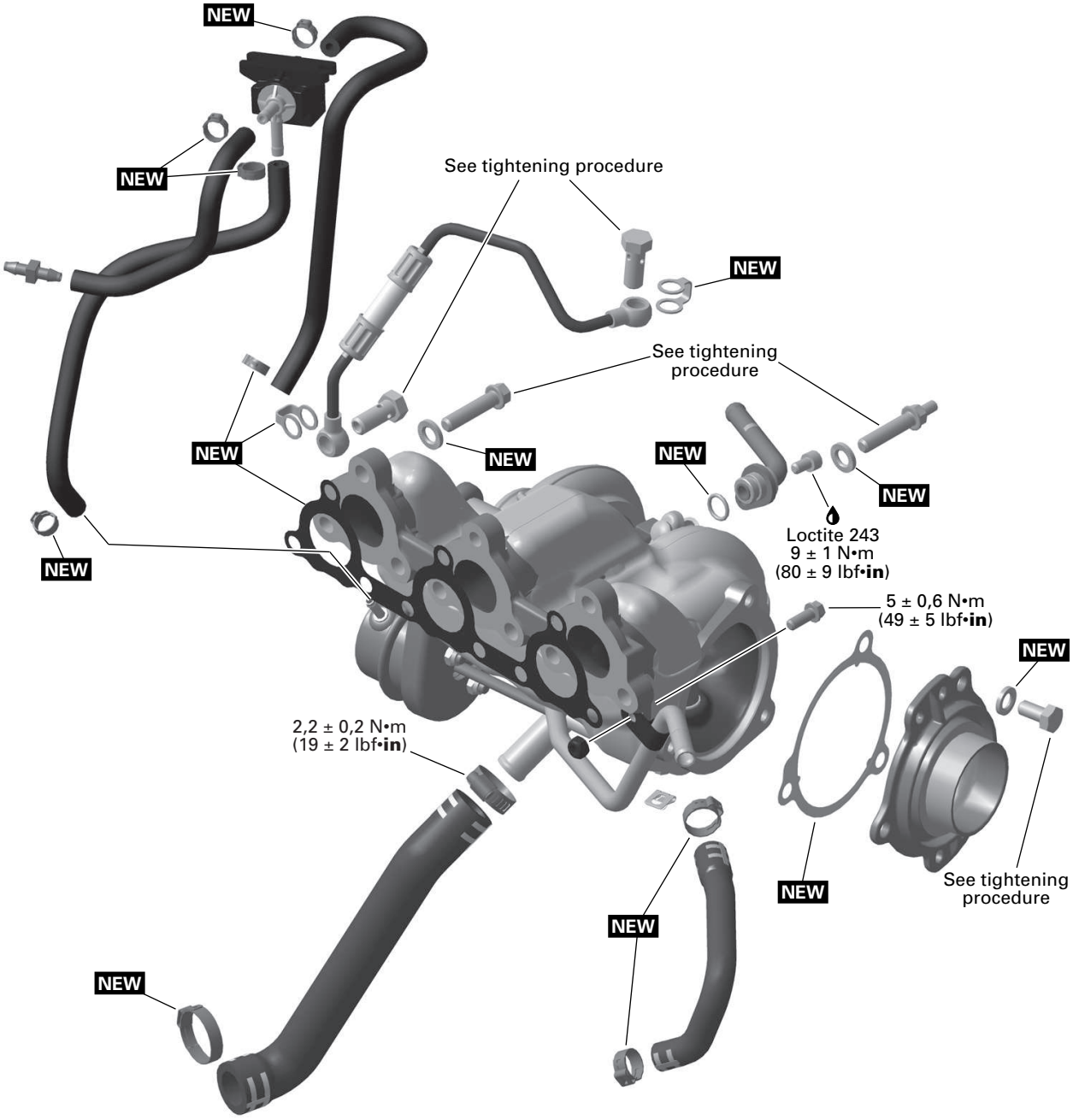


**NEW** = Component must be replaced when removed.

## General

This section refers to the following ECM:

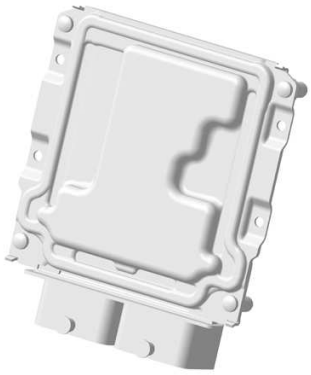

*ECM GEN2 – XCU*

During the assembly or the installation, use the torque values and service products as in the exploded views.

**⚠ WARNING**

**Torque wrench tightening specifications must be strictly adhered to. Locking devices when removed (e.g.: locking tabs, elastic stop nuts, cotter pins, etc.) must be replaced with new ones.**

**NOTICE**

**Hoses, cables or locking ties removed during a procedure must be reinstalled as per factory standards.**

### *Boost Pressure Sensor (BPS)*

The BPS is a piezoresistive absolute pressure sensor.

To ensure optimal engine operation in all conditions, the ECM system requires 2 pressure sensors: The BPS and the MAPTS. The BPS measures the air pressure upstream the throttle plate and the MAPTS measures the pressure downstream the throttle plate.

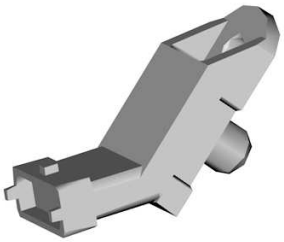

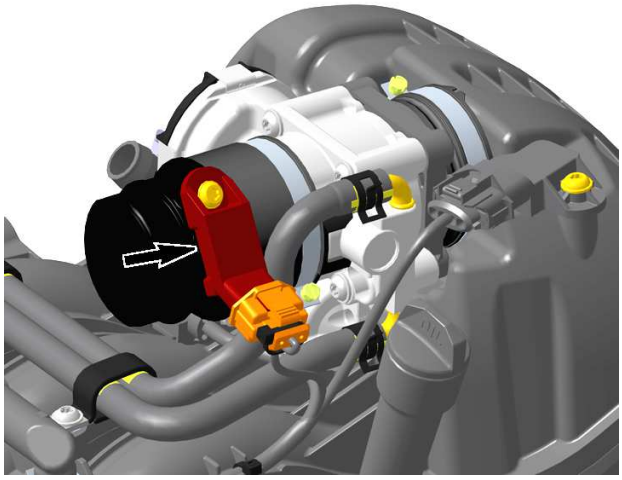

*BPS*

### *BPS Location*

The BPS is located on the air hose between the ETA and the intercooler.

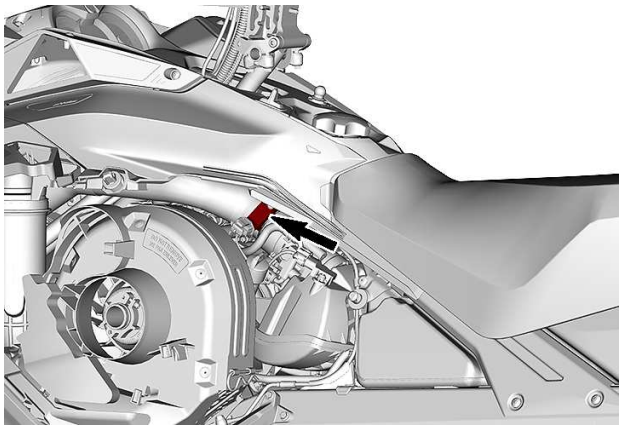

### *BPS Troubleshooting*

BPS pin 3 to ECM-13 - 30 is the signal wire.

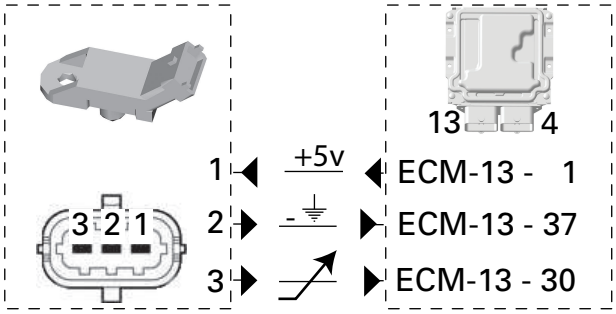


The BPS is powered at key on.

### *Testing the BPS Voltage*

1. Disconnect connector from BPS.
2. Turn ignition key on.
3. Read voltage as per following table.

| **Fluke 115 multimeter (P/N 529035868)** |  |
|---|---|

| **BPS Input Voltage Test** | | |
|---|---|---|
| **BPS Connector Pin** | **Battery** | **Specification** |
| 1 | Negative (-) post | Approx. 5 V |
| 2 | | Approx. 0 V |
| 3 | | |

4. If voltage measured is as specified, replace the BPS.
5. If voltage measured is not as specified, refer to *Testing the Continuity of BPS Wiring Harness*.

### *Testing the BPS Circuit Continuity*

1. Install ECM-13 connector on the ECM adapter.

| **ECM adapter tool GEN2 (P/N 529036513)** |  |
|---|---|

2. Test for circuit continuity as per following table.

| **Fluke 115 multimeter (P/N 529035868)** |  |
|---|---|

| **BPS Circuit Continuity Test** | | |
|---|---|---|
| **BPS Connector Pin** | **ECM Adaptor Pin** | **Specification** |
| 1 | 1 | Close to 0 Ω continuity |
| 2 | 37 | |
| 3 | 30 | |

3. If wiring harness is good, check ECM. Refer to *Engine Control Module (ECM) - GEN2* subsection.
4. If a high resistance or an open circuit is measured, repair or replace wiring and connectors between the ECM and the BPS.

### *Replacing the BPS*

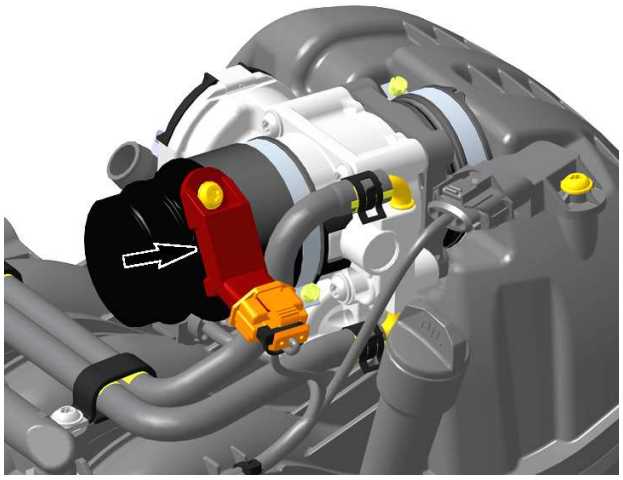

| **Tightening Torque** | |
|---|---|
| BPS retaining screw | 4.5 ± 0.5 Nm (40 ± 4 lbf-in) |

### *Boost Control Valve (BCV)*

The BCV controls the pressure acting on the waste gate actuator rod spring. The ECM uses pulse width modulation to control the BCV.

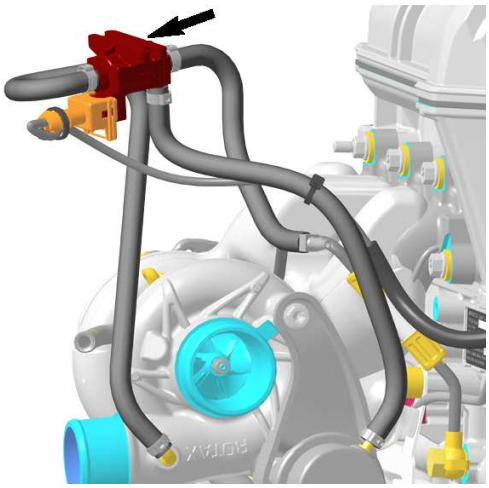

*BCV*

If too high boost pressure is measured by the BPS, the ECM will control the BCV and open the waste gate when the actuation pressure has been reached.

Excess pressure may also be returned to the intake hose before the compressor inlet.

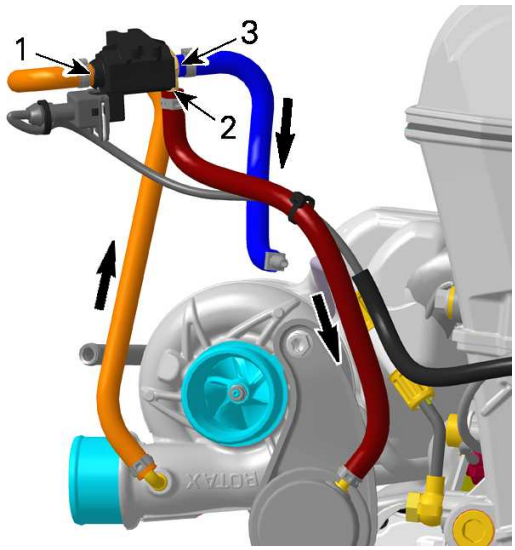


1. *Boost pressure indication port*
2. *Waste gate pressure modulation port*
3. *Excess pressure return port*

**NOTE:** A BCV malfunction will activate Limp Home mode.

### *BCV Access*

Remove the upper body module. Refer to *Body* subsection.

### *BCV Troubleshooting*

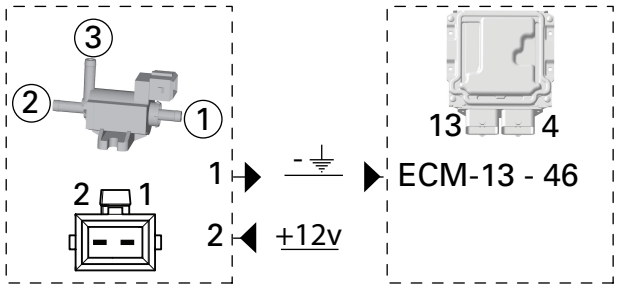


Replace BCV if it will not maintain pressure (leakage) or if flow is restricted.

### *Leakage*

1. Plug port 3.
2. Apply 80 ± 0.5 kPa (11.6 ± .07 lbf/in²) of pressure to port 2.
3. The BCV should maintain pressure for a minimum of 10 seconds.

### *Flow*

Apply 12V to pin 2 and ground pin 1.

Air should flow freely from port 2 to ports 1 and 3.

### *Testing the BCV Resistance*

1. Disconnect the BCV connector.
2. Using a multimeter, test the resistance as per the following table.

| **Fluke 115 multimeter (P/N 529035868)** |  |
|---|---|

| **BCV Resistance Test** | | |
|---|---|---|
| **BCV Pin** | | **Specification** |
| 1 | 2 | 23 ± 2 Ω |

### *Replacing the BCV*

Replace all Oetiker clamps.

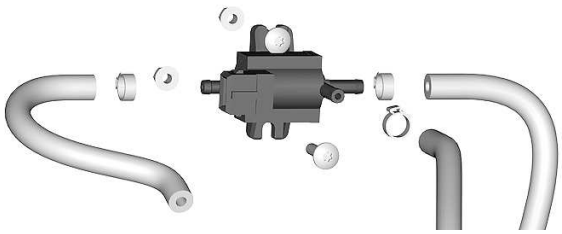

Ensure proper hose routing.

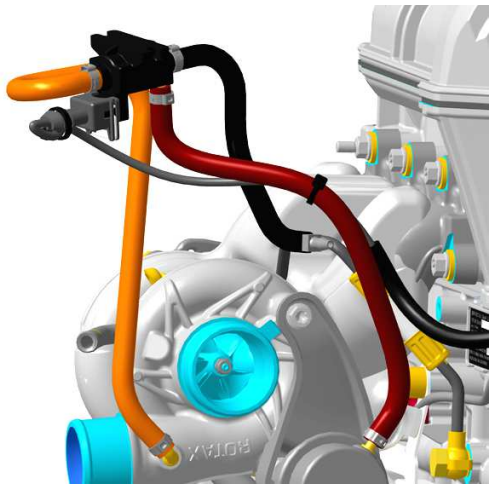

| Tightening Torque | |
|---|---|
| BCV retaining screws | 1.1 ± 0.1 Nm<br>(10 ± 1 lbf-in) |

### *Turbocharger*

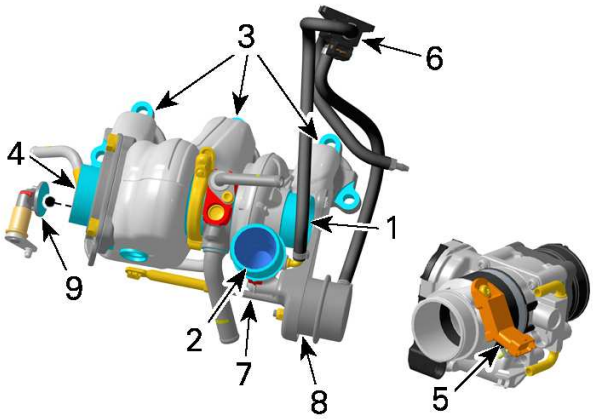


1. *Compressor inlet*
2. *Compressor outlet*
3. *Turbine inlet*
4. *Turbine outlet*
5. *Boost Pressure Sensor (BPS)*
6. *Boost Control Valve (BCV)*
7. *Waste gate actuator rod*
8. *Actuator rod spring*
9. *Waste gate*

### *Turbine*

The exhaust gases cause the turbine wheel to spin and accelerate. The gases then exit through the turbine outlet towards the muffler.

The turbine wheel drives the compressor wheel through the rotor shaft. When the turbine wheel is spinning, the compressor wheel is spinning at the same speed.

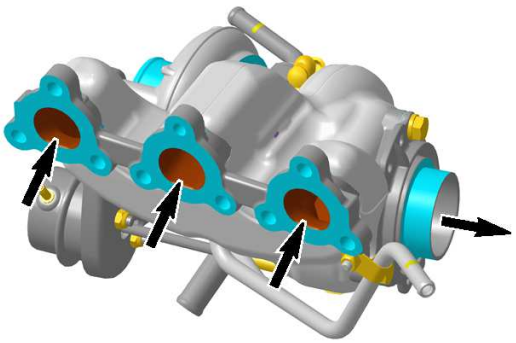

### *Compressor*

The compressor wheel spinning causes filtered air to enter through the compressor inlet. The air is then compressed and exits through the compressor outlet.

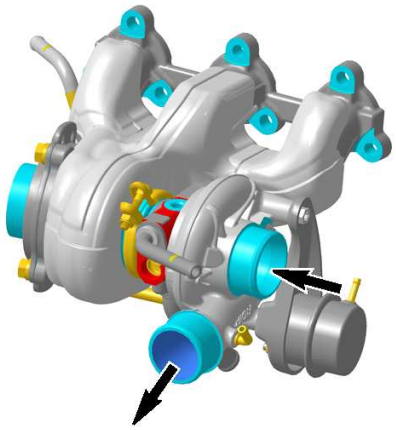

### *Waste Gate Actuator Rod and Spring*

When the BCV allows compressed air to enter the waste gate actuator, the actuator rod will move to open the waste gate.

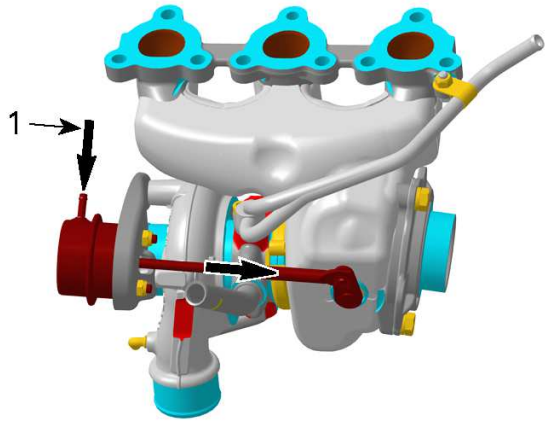


***WASTE GATE OPENS***

1. *Compressed air*

When the air pressure inside the actuator drops, the spring will return the actuator rod to its initial position and close the waste gate.

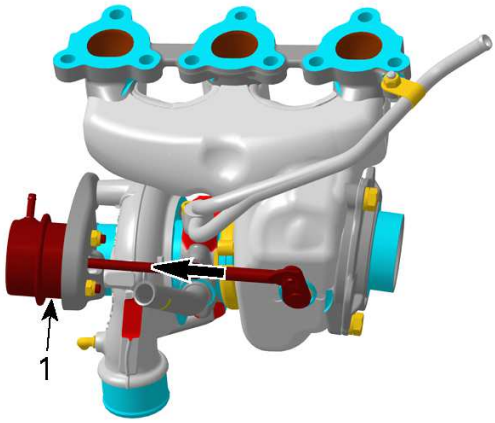


*WASTE GATE CLOSES*
*1. Compression spring inside actuator*

### *Waste Gate*

The waste gate regulates turbine speed by allowing exhaust gas to bypass the turbine.



## Waste Gate

**NEW** turbocharger assemblies are factory adjusted. Do not try to adjust the waste gate.

## Waste Gate Actuator Rod

**NEW** turbocharger assemblies are factory adjusted. Do not try to adjust the waste gate actuator rod.

## Maintenance

The turbocharger is maintenance free. However it is susceptible to damage caused by failures from other systems. Refer to *Troubleshooting* in this subsection.

**NOTICE**

**If particles are suspected of entering the exhaust system, take the proper actions to remove them.**

**NOTICE**

**Never operate engine without an air filter.**

**NOTICE**

**Engine oil change intervals and procedure must be respected.**

For air filter cleaning, refer to *Air Intake System* subsection.

### *Precautions*

### *Engine Warming and Cooling*

Allow the vehicle to reach operating temperature before placing high demand on the engine. This allows oil to reach the correct viscosity to properly lubricate the turbo.

Allow the vehicle to idle before turning it off. This will allow the engine to lubricate and cool the turbo.

## Troubleshooting

### *Troubleshooting*

**1. Lack Of Power**

Cold start

– *Allow vehicle to reach operating temperature up for turbo to be at maximum efficiency.*

Clogged air filter.

– *Check air filter. Refer to Air Intake System subsection.*

Intake system collapsed, restricted or leaking.

– *Check tightness of clamps and screws.*

– *Damaged or missing gaskets.*

– *Check for foreign object between air filter and turbocharger.*

– *Inspect parts for damage, cracks or obstructions. Repair or replace. Refer to Air Intake System and Intake Manifold - GEN2 subsection.*

Exhaust system collapsed, restricted or leaking.

– *Check if the exhaust system is blocked or damaged. Replace parts as necessary. Refer to Exhaust System subsection.*
– *Check turbocharger housing for cracks, blown or missing gaskets. Replace parts as necessary. Refer to procedure in this subsection.*
– *Check for foreign object in the exhaust system.*

Fuel pump malfunction.

– *Perform a fuel pump pressure test and check fuel pump. Refer to Fuel Tank and Fuel Pump subsection.*

Sensor or injector malfunction.

– *Check fault codes with the BRP diagnostic software (BUDS2). Refer to Engine Management System subsection.*
– *Check fuel injection system is in good condition and correctly adjusted. Refer to Electronic Fuel Injection (EFI) -. GEN2 subsection.*
– *Check Boost Pressure Sensor (BPS). Refer to this subsection.*
– *Check Turbo Control Valve (BCV) function and for correct installation. Refer to this subsection.*

Engine damage or malfunction.

– *Check for proper valve timing. Refer to Timing Chain subsection.*
– *Perform engine leak test. Refer to Cylinder Head - GEN2 subsection.*

Waste gate malfunction.

– *Check waste gate actuator. Refer to procedure in this subsection.*
– *Check waste gate for smooth movement.*
– *Check Turbo Control Valve (BCV) function and for correct installation. Refer to this subsection.*

Intercooler malfunction.

– *Check if intercooler is clogged or contaminated.*
– *Check for correct intercooler fan electric connection (direction of rotation).*

Turbocharger blocked or damaged.

– *Check for excessive carbon build up on housing.*
– *Check for signs of contact of the compressor wheel on housing.*
– *Check for rotor radial clearance.*
– *Check if rotor shaft bearing is worn out.*
– *Check turbocharger housing if damaged or restricted.*

**2. Noisy Performance**

Support brackets, turbocharger flanges or clamps are loose.

– *Check tightness of clamps and screws.*
– *Check if support brackets and parts connected to the turbocharger are not loose or damaged.*

Foreign object in intake or exhaust system.

– *Check and clean intake and/or exhaust system.*

Intake system collapsed, restricted or leaking.

– *Check tightness of clamps and screws.*
– *Inspect parts for damage, cracks or obstructions.*
– *Check for damaged or missing gaskets.*

Exhaust system collapsed, restricted or leaking.

– *Check tightness of clamps and screws.*
– *Inspect parts for damage, cracks or obstructions.*
– *Check for damaged or missing gaskets.*

Turbocharger blocked or damaged.

– *Check for excessive carbon build up on housing.*
– *Check for imbalance due to damaged or broken rotor blades.*
– *Check turbocharger housing if damaged or restricted.*
– *Check for rotor radial clearance.*
– *Check if rotor shaft bearing is worn out.*

**3. Blue Smoke and/or Oil Consumption**

Clogged air filter.

– *Inspect air filter. Refer to Air Intake System subsection.*

Intake system collapsed, restricted or leaking.

– *Check tightness of clamps and screws.*

– *Inspect parts for damage, cracks or obstructions.*

– *Check for damaged or missing gaskets.*

Use of unsuitable engine oil type.

– *Replace engine oil by the recommended engine oil.*

Excessive carbon build up on housing.

– *Check for excessive pressure in crankcase and correct function of crankcase ventilation system.*

– *Check if the oil return hose is clean and not restricted.*

**4. Excessive Engine Oil in Turbocharger**

Worn out bearings of rotor shaft.

– *Perform a pressure drop test, see procedure in this subsection.*

– *Note that some oil traces are normal.*

Blocked oil return hose.

– *Check if oil return hose is free.*

Plugged crankcase ventilation system.

– *Check if crankcase ventilation system is blocked.*

Intake system collapsed or restricted.

– *Check tightness of clamps and screws.*

– *Check for damaged or missing gaskets.*

– *Check for foreign object between air filter and turbocharger.*

– *Inspect parts for damage, cracks or obstructions.*

Exhaust system collapsed, restricted or leaking.

– *Check tightness of clamps and screws.*

– *Inspect parts for damage, cracks or obstructions.*

– *Check for damaged or missing gaskets.*

– *Check for foreign object in the exhaust system.*

Support brackets, turbocharger flanges or clamps are loose.

– *Check tightness of clamps and screws.*

– *Check if support brackets and parts connected to the turbocharger are not loose or damaged.*

Excessive carbon build up on housing.

– *Check if crankcase ventilation system is blocked.*

**5. Damaged Rotor of Turbine or Compressor**

Intake system leaking.

– *Check for foreign object between air filter and turbocharger.*

– *Inspect air filter. Refer to Air Intake System subsection.*

– *Check tightness of clamps and screws.*

– *Inspect parts for damage, cracks or obstructions.*

Exhaust system collapsed, restricted or leaking.

– *Check tightness of clamps and screws.*

– *Inspect parts for damage, cracks or obstructions.*

– *Check for damaged or missing gaskets.*

– *Check for foreign object in the exhaust system.*

Turbocharger blocked or damaged

– *Check for excessive carbon build up on housing.*

– *Check for rotor radial clearance.*

– *Check if rotor shaft bearing is worn out.*

– *Check turbocharger housing if damaged or restricted.*

Oil supply hose and/or oil return hose blocked.

– *Check and/or replace oil hoses, refer to procedures in this subsection.*

Too little warm up time.

– *Extend warm up period.*

**6. Excessive Radial and/or Axial Clearance of Rotor Shaft**

Intake system leaking.

– *Check for foreign object between air filter and turbocharger.*

– *Inspect air filter. Refer to Air Intake System subsection.*

– *Inspect parts for damage, cracks or obstructions.*

Exhaust system collapsed, restricted or leaking.

– *Check tightness of clamps and screws.*

– *Inspect parts for damage, cracks or obstructions.*

– *Check for damaged or missing gaskets.*

– *Check for foreign object in the exhaust system.*

Insufficient lubrication or oil lag at start up.

– *Inspect oil pressure line if restricted, blocked or leaking.*

– *Inspect engine oil filter if restricted or blocked, refer to Lubrication System - GEN2 subsection.*

– *Check engine oil pressure, refer to Lubrication System - GEN2 subsection.*

Engine oil contaminated or unsuitable engine oil type.

– *Replace engine oil and filter, refer to Lubrication System - GEN2 subsection.*

Excessive carbon build up on housing.

– *Check if crankcase ventilation system is blocked.*

Worn out bearings of rotor shaft.

– *Perform a pressure drop test, see procedure in this subsection.*

## Procedures

### *Oil Pressure Line*

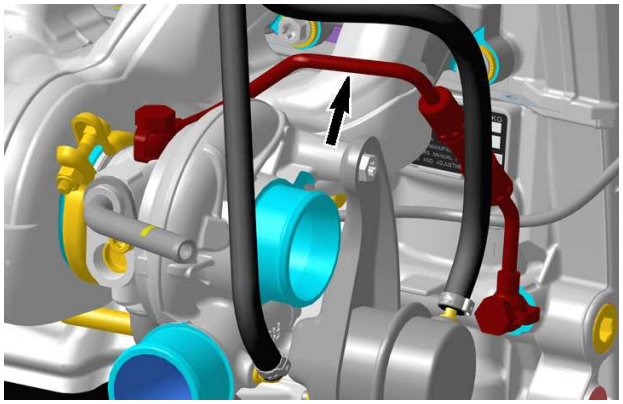

### *Oil Pressure Line Access*

Remove the upper body module. Refer to *Body* subsection.

### *Removing the Oil Pressure Line*

**NOTICE**

**Place a drain pan underneath the oil pressure line to catch up oil spillage**

1. Remove banjo bolt from cylinder block and discard double sealing ring.

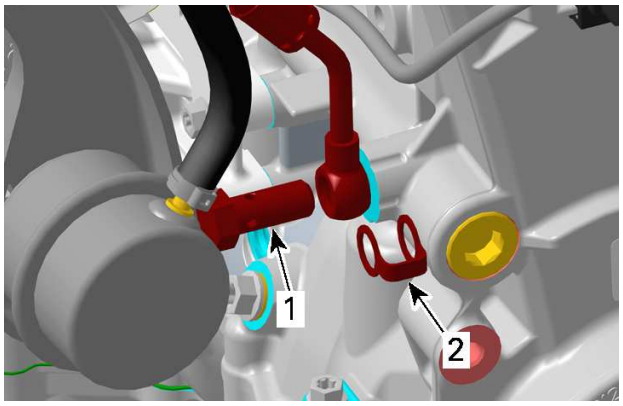


*1. Banjo bolt*
*2. Double sealing ring (discard it)*

2. Remove banjo bolt from compressor housing and discard double sealing ring.

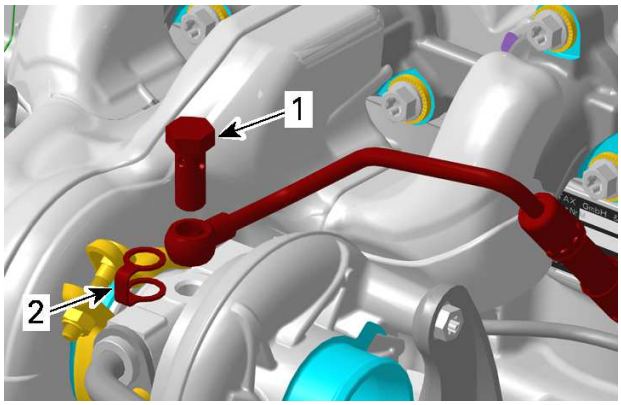


1. *Banjo bolt*
2. *Double sealing ring (discard it)*

3. Move oil pressure line out of vehicle.

| NOTICE |
| --- |
| **Clean all spilled oil.** |

### *Installing the Oil Pressure Line*

The installation is the reverse of the removal procedure. However pay attention to the following.

1. Install **NEW** double sealing rings on oil pressure line.
2. Tighten banjo bolts to specification.

| Tightening Torque | | |
| --- | --- | --- |
| Banjo bolts | Step A | 8 Nm<br>(71 lbf-in) |
| | Step B | 15.75 ± 0.75 Nm<br>(139 ± 7 lbf-in) |

3. Refill engine with recommended engine oil. Refer to *Lubrication System - GEN2* subsection.

### *Oil Return Hose*

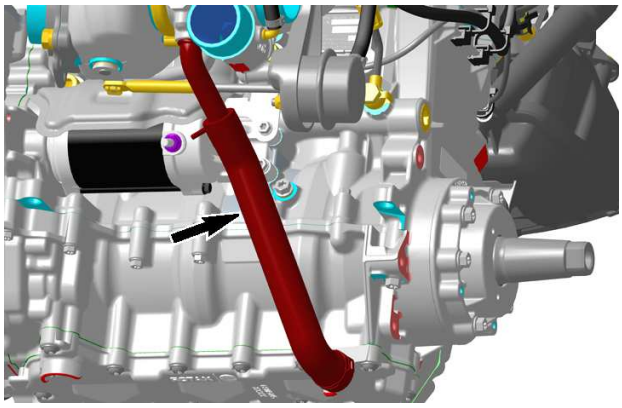

### *Oil Return Hose Access*

Remove the upper body module. Refer to *Body* subsection.

### *Removing the Oil Return Hose*

1. Remove clamp and withdraw hose from oil tube.

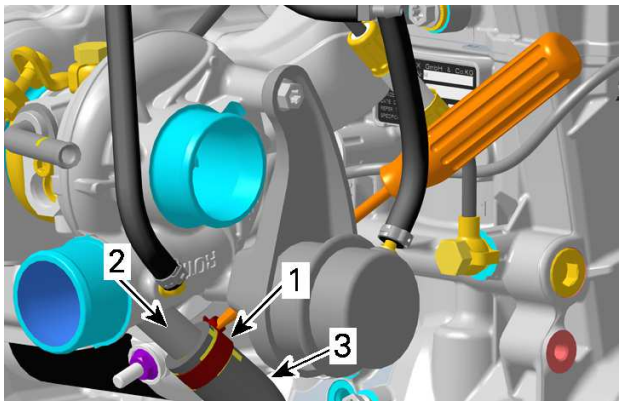


1. *Clamp*
2. *Oil tube*
3. *Hose*

2. Remove and discard 1-ear-clamp and withdraw hose from oil sump cover.

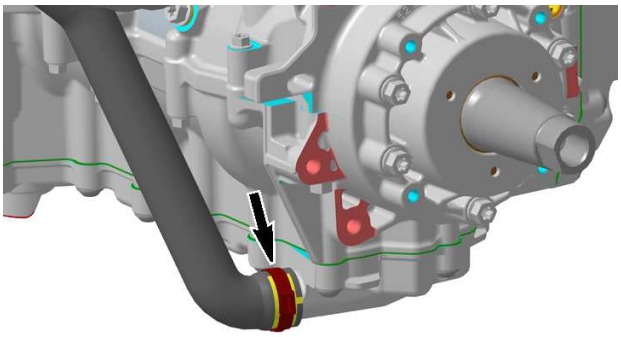

| NOTICE |
| --- |
| **Clean all spilled oil.** |

### *Installing the Oil Return Hose*

1. The installation is the reverse of the removal procedure. However, pay attention to the following.
2. Tighten clamp to following specification.

| Tightening Torque | |
| --- | --- |
| Clamp | 2.2 ± 0.2 Nm<br>(19 ± 2 lbf-in) |

3. Refill engine with recommended engine oil. Refer to *Lubrication System - GEN2* subsection.

### *Cooling Water Pipe*

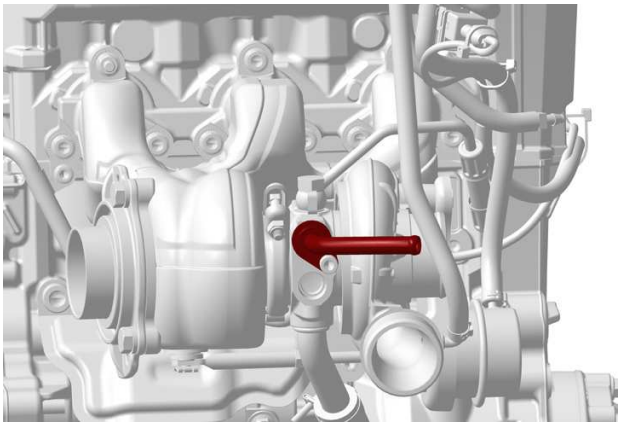

### *Cooling Water Pipe Access*

Remove the upper body module. Refer to *Body* subsection.

### *Removing the Cooling Water Pipe*

Remove cooling water pipe.

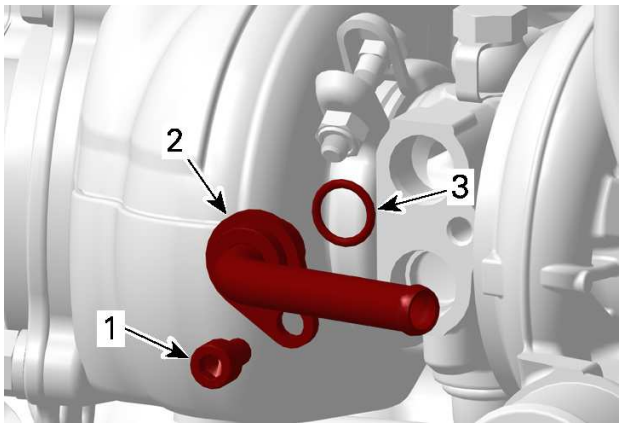


1. *Screw*
2. *Cooling water pipe*
3. *O-ring (discard it)*

### *Installing the Cooling Water Pipe*

The installation is the reverse of the removal procedure. However, pay attention to the following.

1. Clean seat of the cooling water pipe with a clean rag.
2. Install **NEW** O-ring on cooling water pipe.
3. Apply a thin film of engine oil to O-ring to ease installation.

| **Engine oil** |
| --- |

4. Install cooling water pipe into turbocharger.

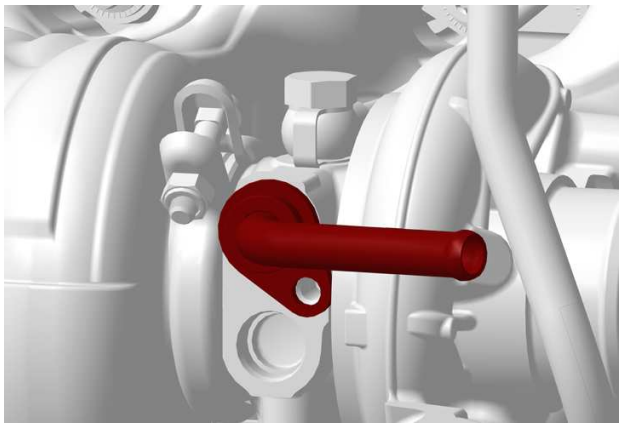

5. Install cooling water pipe screw and tighten to specification.

| **Loctite 243 (blue)** |
| --- |

| Tightening Torque | |
| --- | --- |
| Cooling water pipe screw | 9 ± 1 Nm<br>(80 ± 9 lbf-in) |

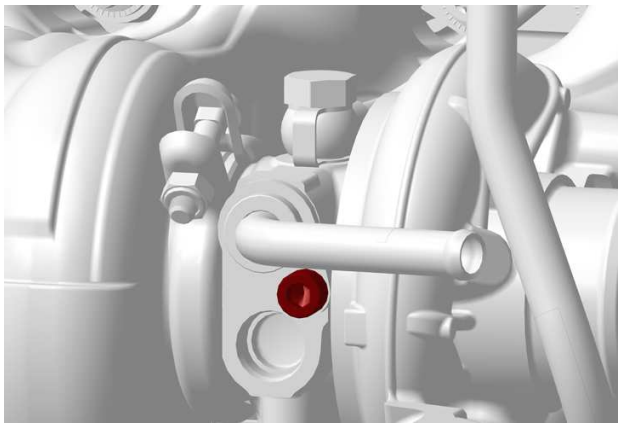

6. Install all other parts which were previously removed.

### *Exhaust Flange*

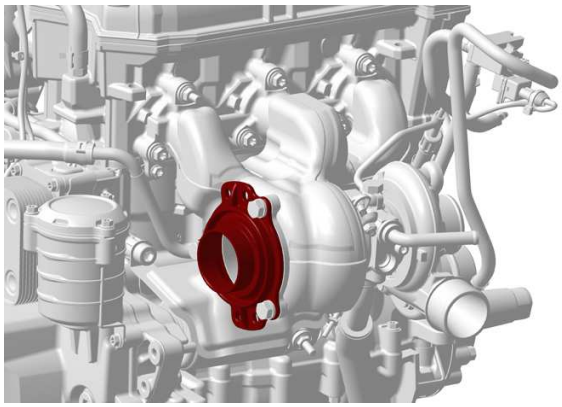

### *Exhaust Flange Access*

Remove the exhaust pipe. Refer to *Exhaust System* subsection.

### *Removing the Exhaust Flange*

Remove exhaust flange.

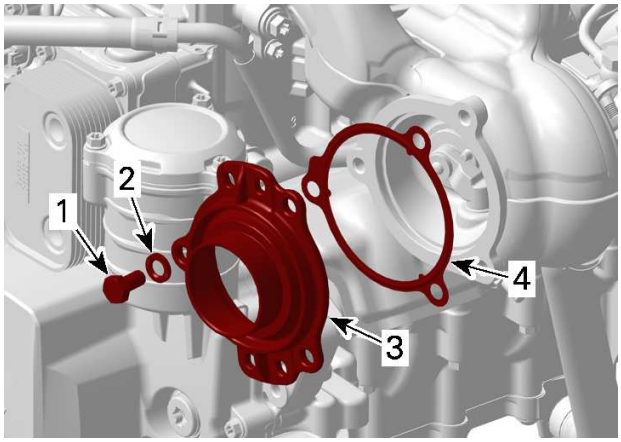


1. *Exhaust flange screws*
2. *Washers (discard them)*
3. *Exhaust flange*
4. *Exhaust flange gasket (discard it)*

### *Installing the Exhaust Flange*

The installation is the reverse of the removal procedure. However, pay attention to the following.

1. Install **NEW** exhaust flange gasket with the raised side showing towards the exhaust flange.

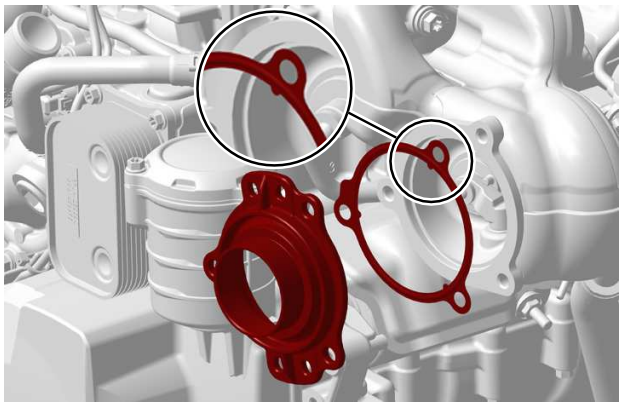

2. Install exhaust flange onto the Turbocharger.
3. Install screws with **NEW** washers into the exhaust flange.

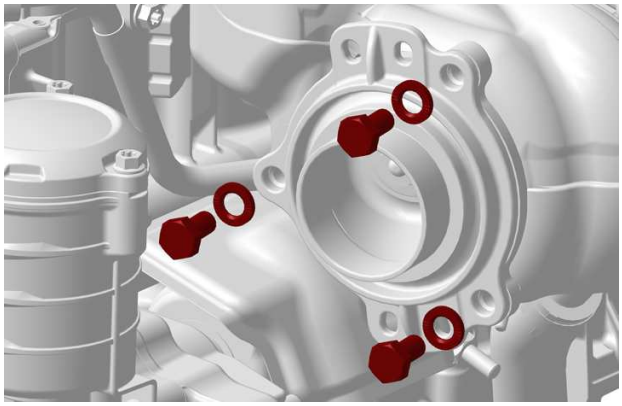

4. Tighten exhaust flange screws according the following sequence.

| Tightening Torque | | |
|---|---|---|
| Exhaust flange screws | Step A | 5 ± 0.6 Nm (44 ± 5 lbf-in) |

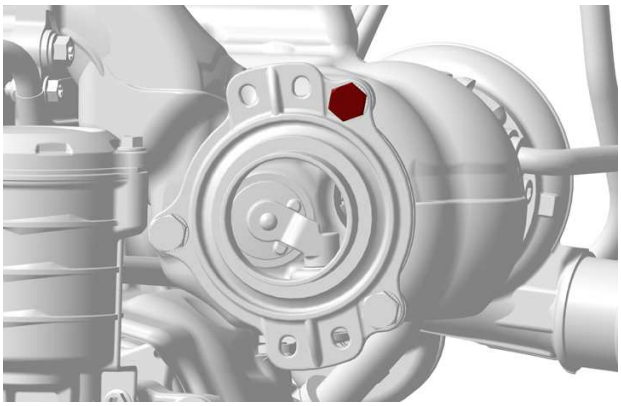

| Tightening Torque | | |
|---|---|---|
| Exhaust flange screws | Step B | 23 ± 3 Nm (17 ± 2 lbf-ft) |

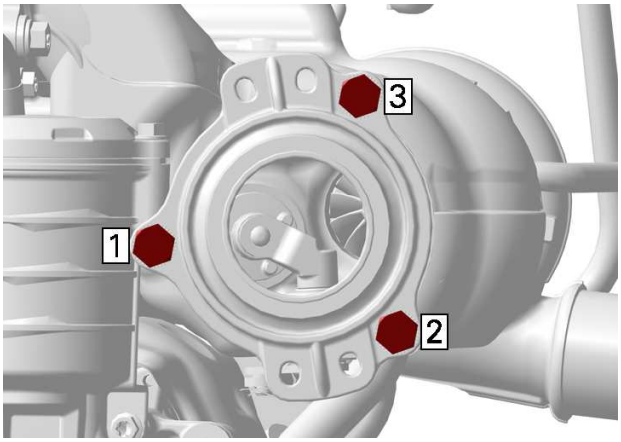


Install all other parts which were previously removed.

### *Turbocharger*

#### *Removing the Turbocharger*

1. Remove the upper body module. Refer to *Body* subsection.
2. Drain coolant. Refer to *Cooling System - Vehicle Component* subsection.
3. Remove the muffler and the exhaust pipe. Refer to *Exhaust System* subsection.
4. Remove *Oil Pressure Line* from turbo. Refer to procedure in this subsection.

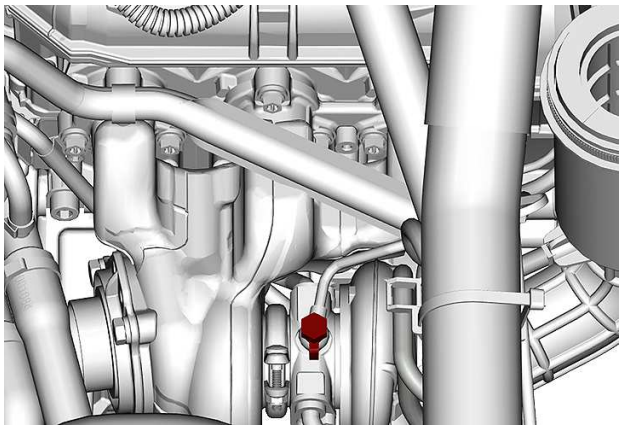

5. Detach oil return hose from turbo oil tube.

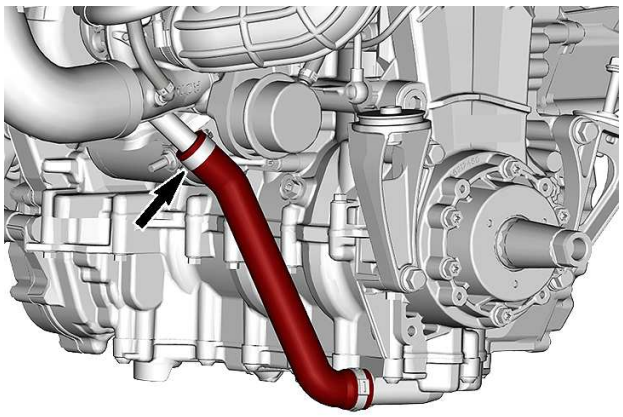

6. Remove Oetiker clamps and disconnect BCV hoses from turbo and actuator.

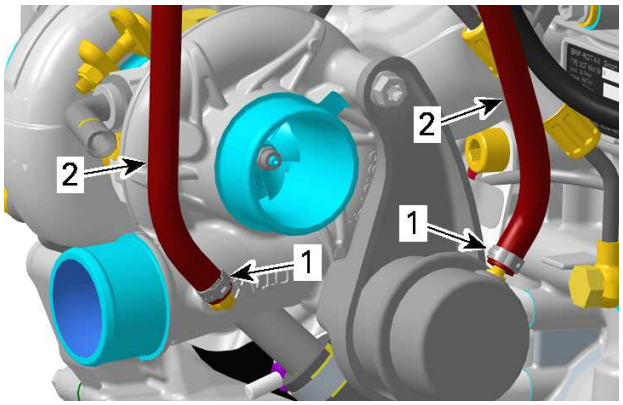


*1. Oetiker clamps*
*2. BCV hoses*

7. Unplug the coolant hose from the inlet tube.

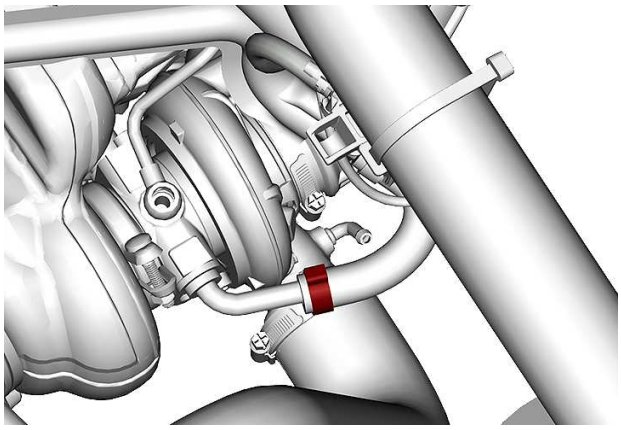

8. Remove the nut retaining the coolant hose to cylinder head.

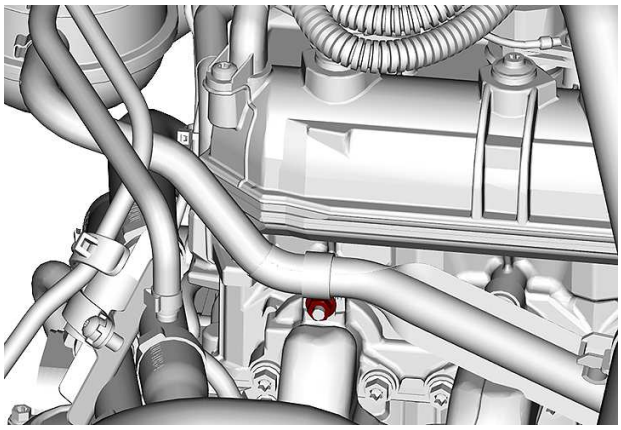

9. Loosen clamps and disconnect air inlet and outlet hoses.

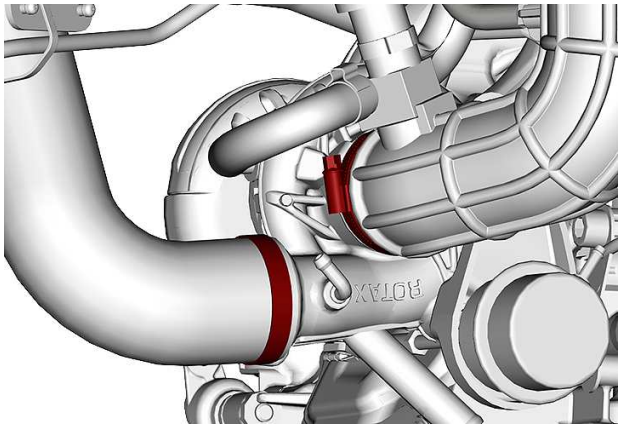

10. Remove the turbocharger retaining screws and washers.

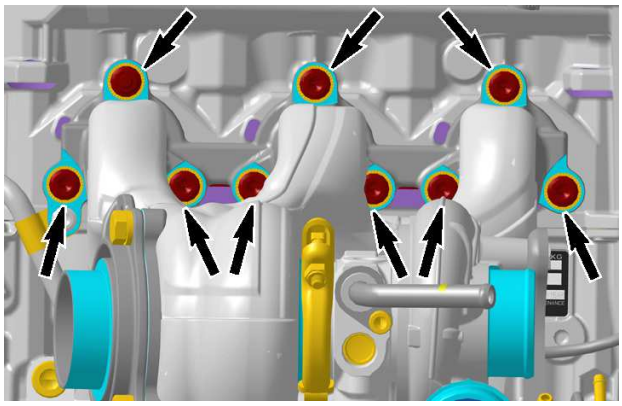

11. Lift turbocharger and pull it out of vehicle.

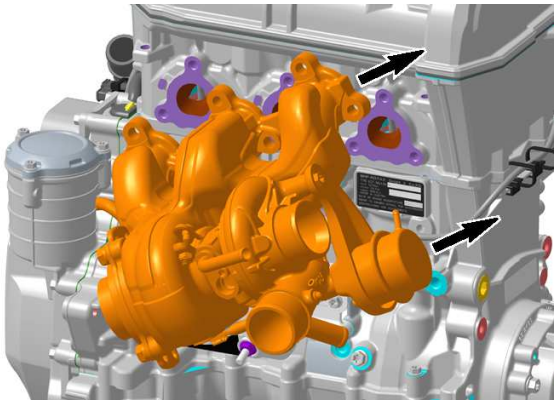

### *Inspecting the Turbocharger*

Check turbocharger:

- for any damages or cracks
- for corrosion
- for any oil leak
- for contamination and/or oil coking at oil inlet and outlet
- if rotor shaft turns smooth and easily.

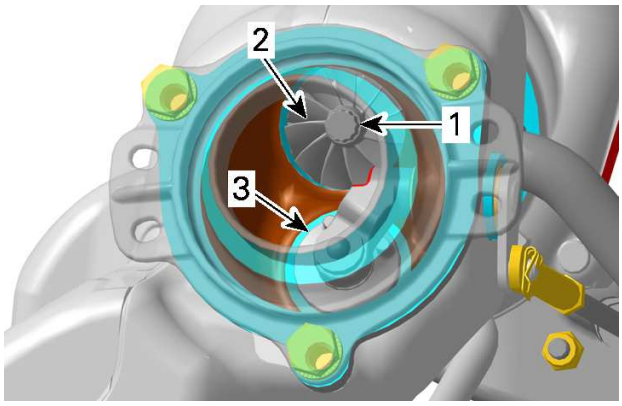


1. *Rotor shaft*
2. *Turbine rotor*
3. *Waste gate*

### *Testing the Rotor Shaft Bearing Leakage*

| | |
|---|---|
| **Engine leak down test kit (P/N 529035661)** |  |
| **Plug (Turbo) (P/N 529036460)** | 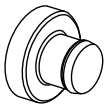 |

1. Block the oil return hose.

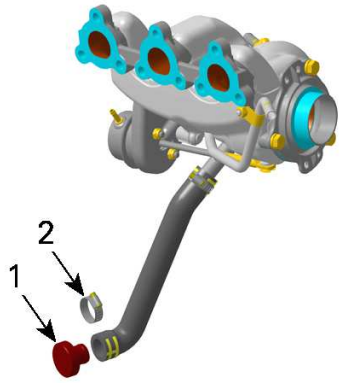


*1. Plug*
*2. Clamp*

2. Clean oil supply bore.

| | |
|---|---|
| **Adapter gauge (Turbo) (P/N 529036461)** | 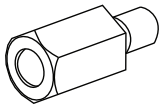 |

3. Install adapter with O-ring into oil supply bore.

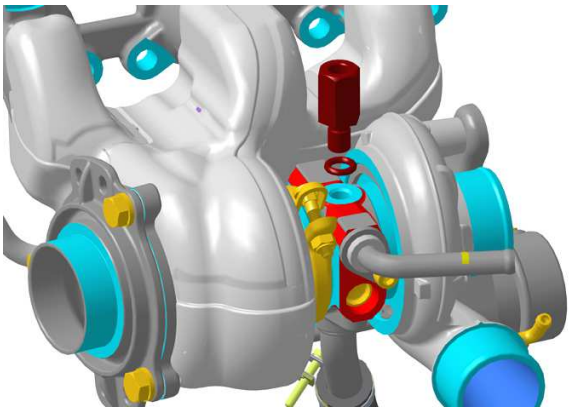

4. Install gauge adapter into adapter.
5. Connect leak tester to adequate air supply.
6. Set needle of measuring gauge to zero.

**NOTE:** All testers have specific instructions on gauge operation and required pressure.

7. Supply turbocharger with air pressure.

**NOTICE**

**During leakage test apply slightly a alternating radial pressure onto the shaft to achieve a proper test result.**

| Rotor Shaft Bearing Leakage Test | |
|---|---|
| Service limit | 50% |

### *Waste Gate Lever and Waste Gate*

1. Remove retaining clip.
2. Check for waste gate actuator rod play on lever pin.
3. Disconnect the waste gate actuator rod from the waste gate lever.
4. Check counter nut of waste gate actuator rod for tightness.

**NOTICE**

**Do not open counter nut of waste gate actuator rod. Length of waste gate actuator rod assembly must not change.**

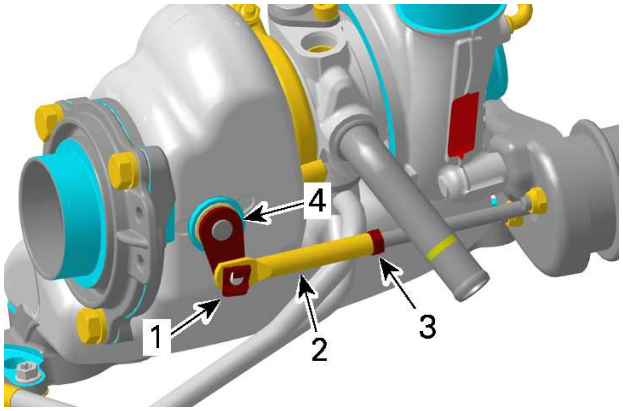


*1. Retaining clip*
*2. Waste gate actuator rod*
*3. Counter nut*
*4. Waste gate lever*

5. Check the waste gate lever for free movement.
6. Check waste gate and its seat for wear or damage.

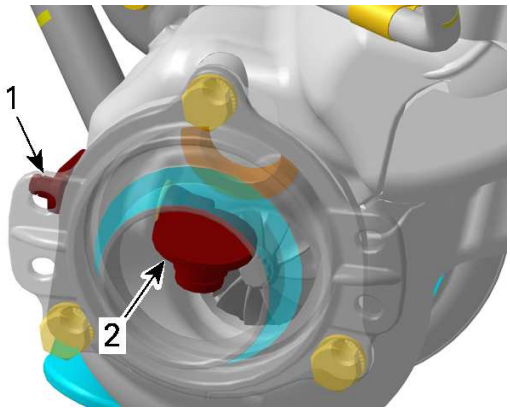


1. *Waste gate lever*
2. *Waste gate*

### *Rotor of Turbine and Compressor*

Check rotor visually for:

– bent blades
– any damages
– thermal stress (turbine rotor).

1. Apply slightly a radial pressure onto the shaft to minimize the gap between rotor and housing.
2. Check radial clearance of the rotors in the complete circumference.

| **Feeler gauge 0.1 mm (.004 in)** |  |
|---|---|

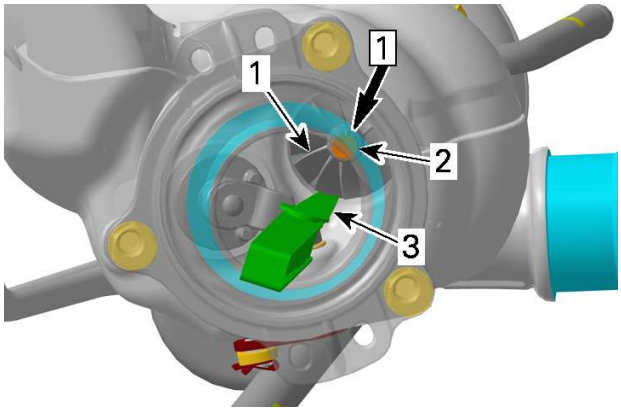


***TURBINE ROTOR***
*Step 1. Push slightly*
1. *Rotor*
2. *Shaft*
3. *Feeler gauge*

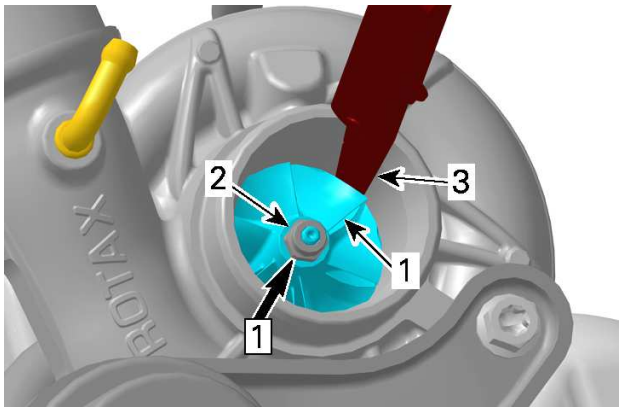


***COMPRESSOR ROTOR***
*Step 1. Push slightly*
1. *Rotor*
2. *Shaft*
3. *Feeler gauge*

| **Rotor Radial Clearance** | |
|---|---|
| Service Limit | Minimum of 0.1 mm (.004 in) |

### *Rotor Shaft*

1. Check discoloration of the shaft due to overheating.
2. Move rotor shaft back and forth to measure axial clearance by using a dial gauge.

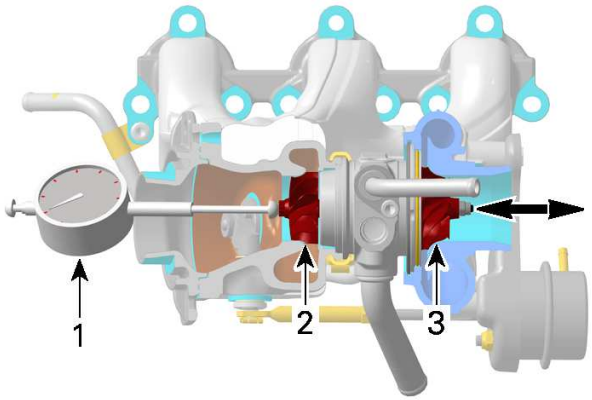


1. *Dial gauge*
2. *Turbine rotor*
3. *Compressor rotor*

| **Rotor Shaft Axial Clearance** | |
|---|---|
| Service Limit | Maximum of 0.1 mm (.004 in) |

### *Waste Gate Actuator*

1. Apply air pressure to the actuator.
2. Measure movement of waste gate actuator rod at specified air pressure.

| Dial gauge |  |
|---|---|

| Vacuum/pressure pump (P/N 529021800) |  |
|---|---|

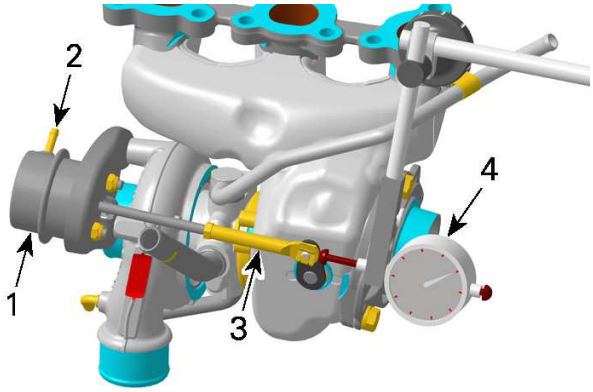


***ALIGN DIAL BORE GAUGE WITH WASTE GATE ACTUATOR ROD***

1. *Actuator*
2. *Fitting for air pressure supply*
3. *Waste gate actuator rod*
4. *Dial gauge*

| Movement Of Waste Gate Actuator Rod | | |
|---|---|---|
| **Model** | **Air Pressure** | **Movement** |
| 130 HP | 43 kPa (6.24 lbf/in²) | 1 ± 0.5 mm (.039 ± .02 in) |
| | 57 kPa (8.27 lbf/in²) | 5 ± 0.8 mm (.197 ± .031 in) |
| 180 HP | 70 kPa (10.15 lbf/in²) | 1 ± 0.5 mm (.039 ± .02 in) |
| | 107.5 kPa (15.59 lbf/in²) | 5 ± 0.8 mm (.197 ± .031 in) |

3. If movement of the waste gate actuator rod is out of specification replace turbo charger

### *Turbine Flange Surface*

1. Check warpage of turbine flange.

| Straight edge |  |
|---|---|
| **Feeler gauge 0.1 mm (.004 in)** |  |

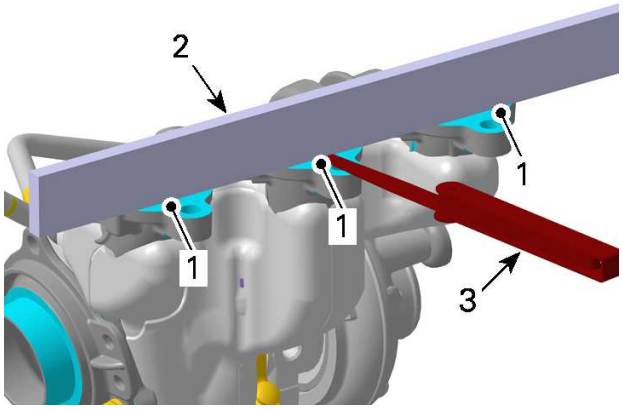


1. *Turbine flange*
2. *Straight edge*
3. *Feeler gauge*

| Turbine Flange Warpage | |
|---|---|
| Service Limit | Maximum of 0.1 mm (.004 in) |

### *Installing the Turbocharger*

The installation is the reverse of the removal procedure. However, pay attention to the following.

1. Place turbocharger retaining screws with **NEW** washers into turbine housing (2x).

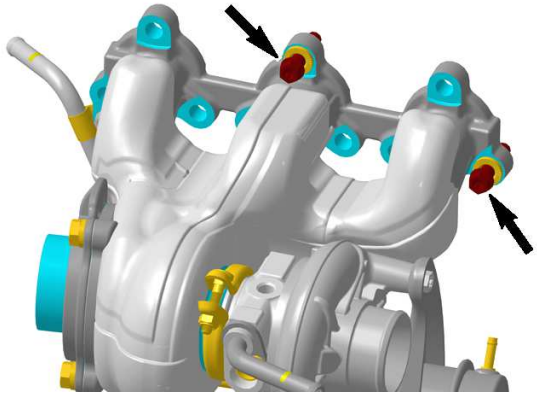

2. Place **NEW** gasket on screws with the raised side towards the turbine housing.

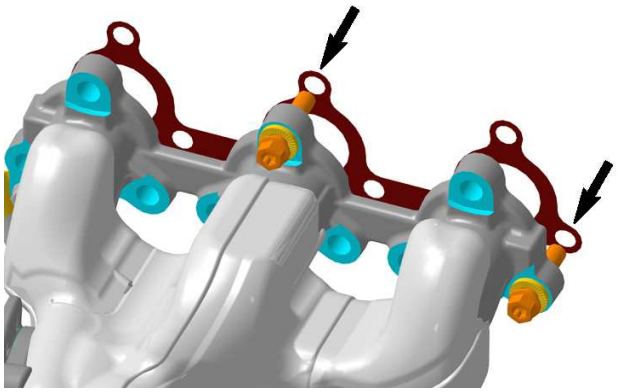

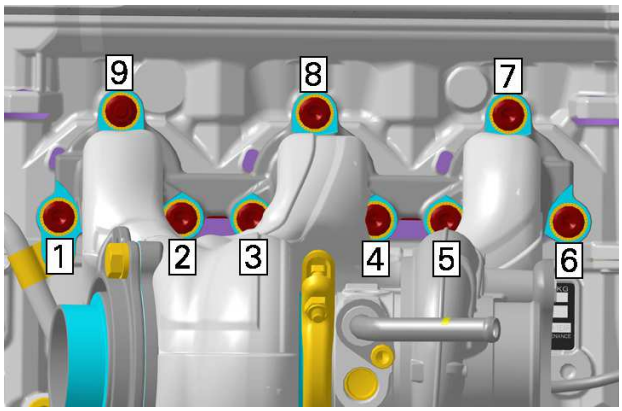


3. Install turbocharger and hand-tighten the 2 retaining screws.
4. Install remaining turbo charger retaining screws with **NEW** washers.
5. Tighten turbocharger retaining screws according the following sequence.

| Tightening Torque | | |
|---|---|---|
| Turbocharger retaining screws | Step A | 5 ± 0.6 Nm (44 ± 5 lbf-in) |

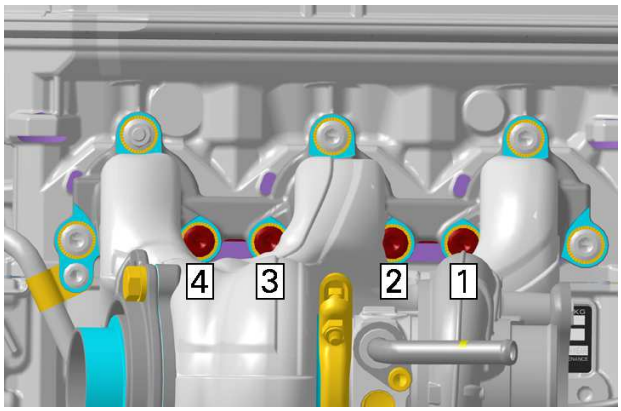


| Tightening Torque | | |
|---|---|---|
| Turbocharger retaining screws | Step B | 23 ± 3 Nm (17 ± 2 lbf-ft) |

6. Fill turbocharger at oil supply bore with engine oil and turn rotor shaft until turbocharger is filled completely.
7. Then immediately install oil return hose and oil supply hose, refer to procedures in this subsection.
8. Refill engine with recommended engine oil. Refer to *Lubrication System - GEN2* subsection.
9. Install all other parts which were previously removed.
10. Start the engine and let it idle for a few minutes to ensure proper turbocharger lubrication.

# Lubrication System - GEN1

## SERVICE TOOLS


| Description | Part Number | Page |
|---|---|---|
| ECM ADAPTER TOOL | (P/N 529036166) | 55 |
| FLUKE 115 MULTIMETER | (P/N 529035868) | 54–55 |
| OIL PRESSURE HOSE | (P/N 529036394) | 52 |
| OIL PRESSURE TEST CAP | (P/N 529036158) | 52 |
| PRESSURE GAUGE | (P/N 529036395) | 52 |


## SERVICE PRODUCTS

Midwest Manuals
Green Manuals
Paperless Manuals For a Better Tomorrow www.green-manuals.com
If you bought this manual from any other seller please leave them NEGATIVE feedback and notify us at bestshopmanuals@gmail.com


| Description | Part Number | Page |
|---|---|---|
| DOW CORNING 111 | | 55 |
| LOCTITE 243 (BLUE) | | 55 |

T

### *600 ACE Engine Lubrication Circuit (Typical)*

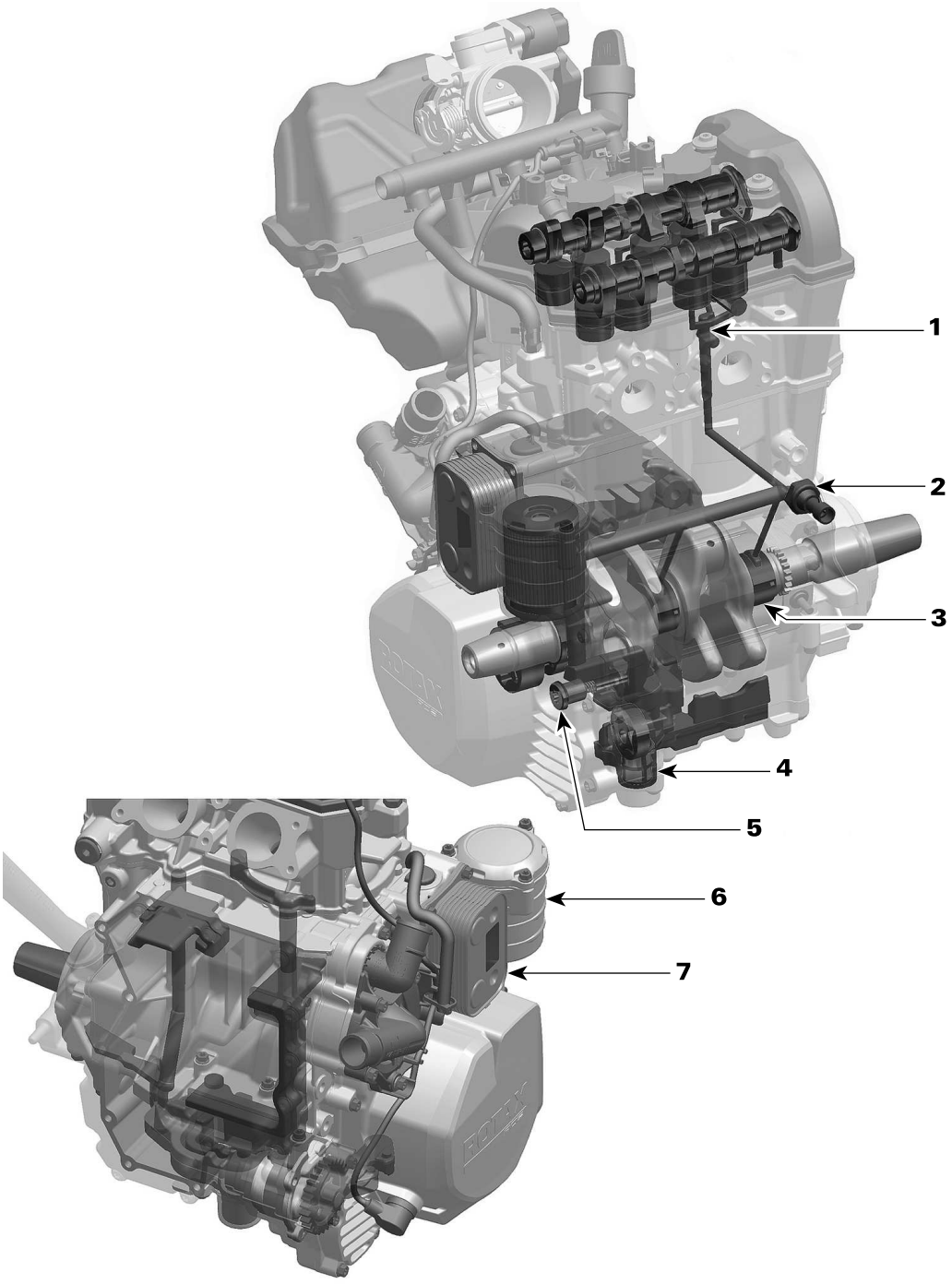


1. *Oil channel to camshaft bearings*
2. *Oil pressure switch*
3. *Crankshaft main bearings*
4. *Oil strainers*
5. *Oil pressure regulator*
6. *Oil filter*
7. *Oil cooler*

## *900 ACE Engine Lubrication Circuit (Typical)*

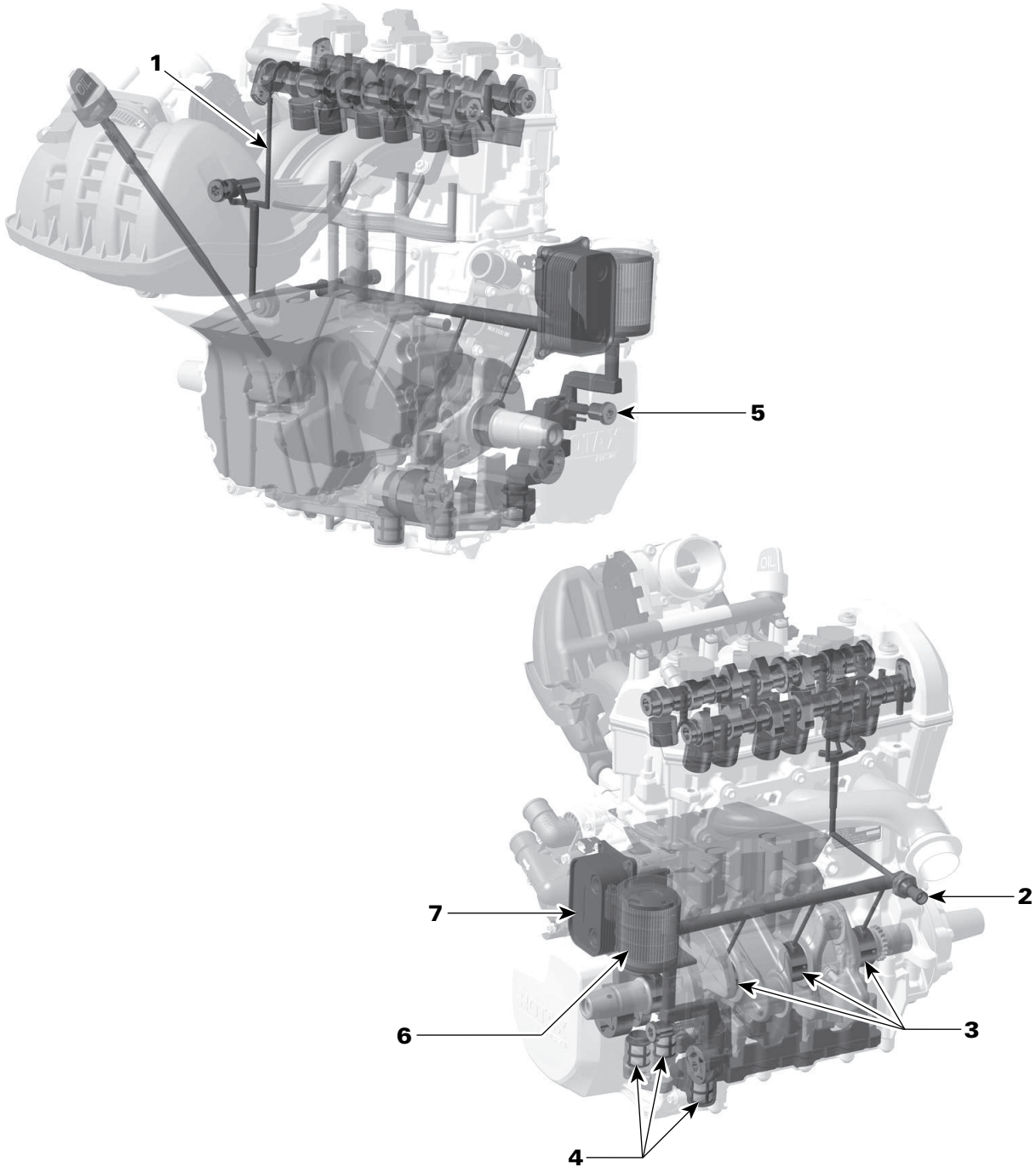


1. *Oil channel to camshaft bearings*
2. *Oil pressure switch*
3. *Crankshaft main bearings*
4. *Oil strainers*
5. *Oil pressure regulator*
6. *Oil filter*
7. *Oil cooler*

## *600 ACE*

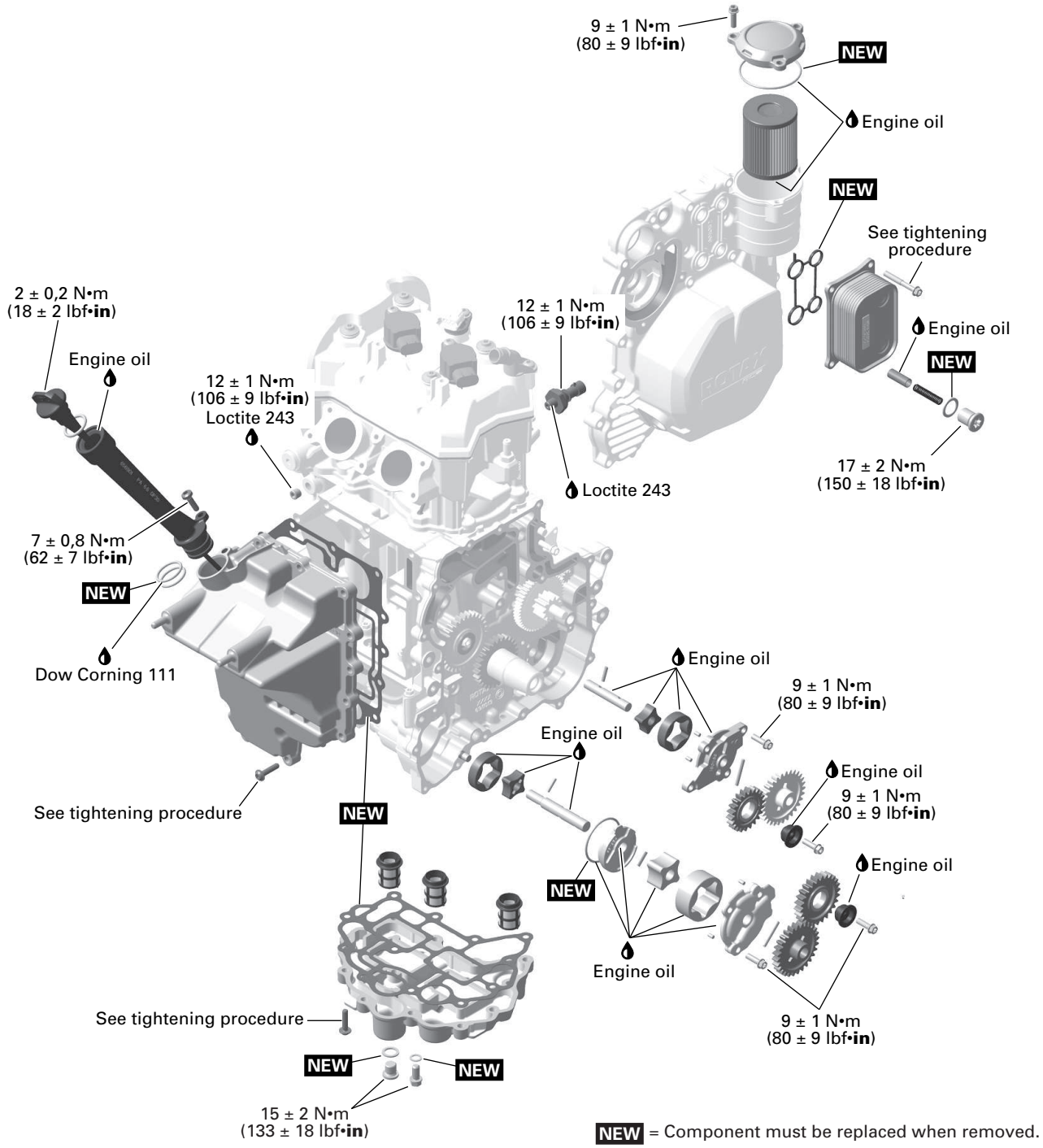


**NEW** = Component must be replaced when removed.

## *900 ACE*

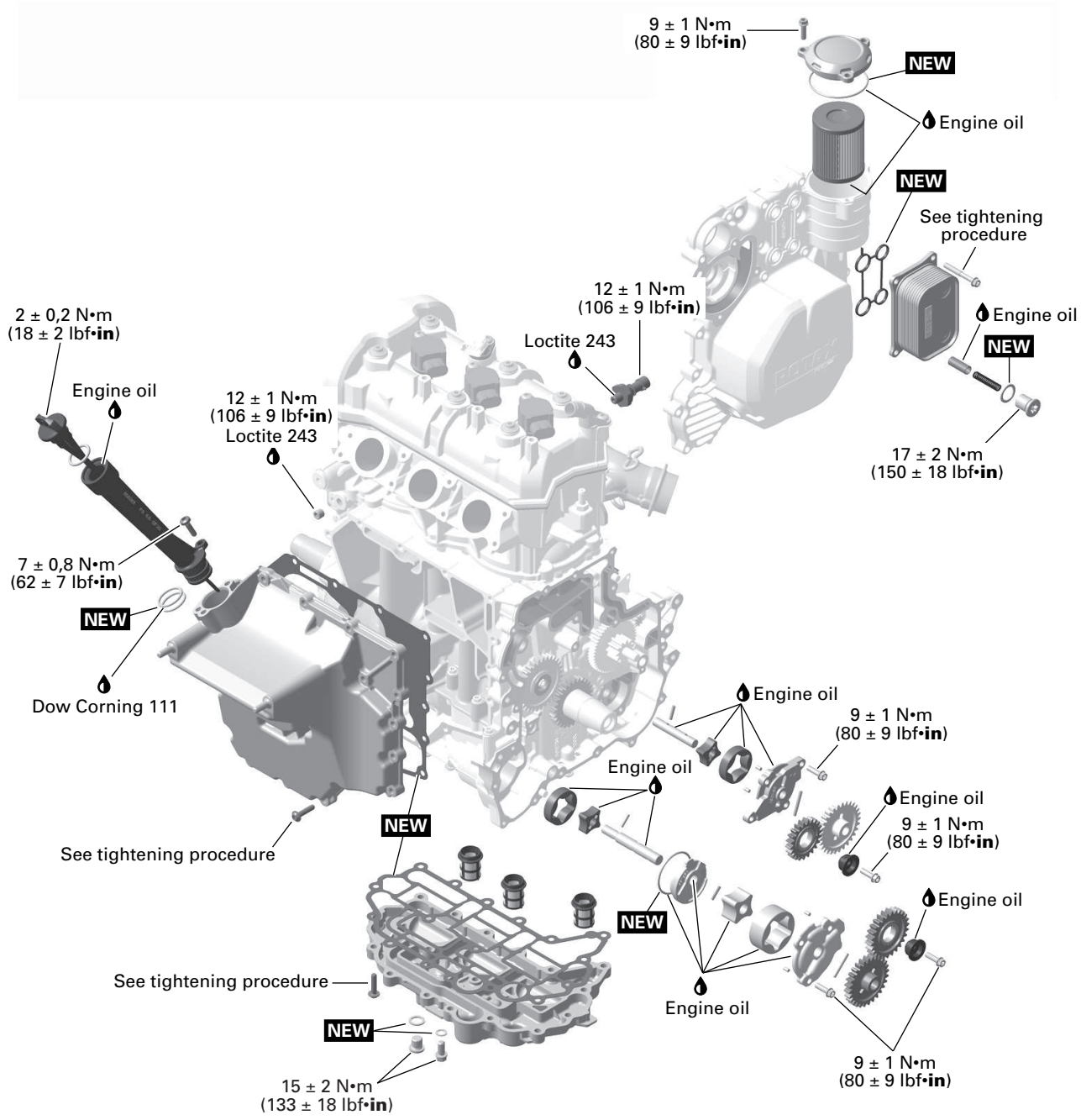


**NEW** = Component must be replaced when removed.

## General

This section refers to the following ECM:

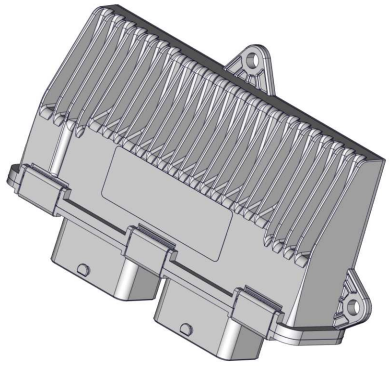

*ECM GEN1 – ME17*

**NOTICE**

**Always disconnect BLACK (-) cable first and reconnect last.**

During assembly/ installation, use the torque values and service products as in the exploded view.

Clean threads before applying a threadlocker. Refer to self-locking fasteners and Loctite application in *Introduction* subsection.

**⚠ WARNING**

**Torque wrench tightening specifications must strictly be adhered to.**
**Locking devices when removed (ex: locking tabs, cotter pin, etc.) must be replaced.**

**NOTICE**

**Hoses, cables or locking ties removed during a procedure must be reinstalled as per factory standards.**

### *System Description*

This engine uses dry sump lubrication. The oil from the cylinder block, timing chain chamber and magneto cover is pumped by two suction pumps.

Both suction pumps are integrated into one module.

The 20 mm (.79 in) large oil suction pump returns the crankshaft and magneto chamber oil to the reservoir.

The 11 mm (.43 in) small oil suction pump returns the timing chain chamber oil to the oil reservoir.

An oil filter and three oil strainers are used to filter dirt and debris from the oil circuit.

The oil strainers are located between oil sump cover and crankcase lower underneath the oil pressure pump.

The oil pressure is provided by a pump and regulated by a spring loaded pressure regulator.

## Maintenance

### *Recommended Engine Oil*

Rotax® engines were developed and validated using the XPS™ oil. BRP recommends the use of its XPS engine oil or an equivalent at all time. Do not add any oil additives to the recommended engine oil. Damages caused by the use of an oil not suitable for the engine or by adding of an oil additives may not be covered by the BRP Limited Warranty.

| **XPS™ Recommended Engine Oil** |
|---|
| 4T 0W40 Synthetic oil |
| If the Recommended XPS Engine Oil Is Not Available |
| Use a 0W40 4-stroke SAE synthetic engine oil meeting or exceeding the following lubricant industry specifications:<br>– API service classification SM or SN<br>Always check the API service label certification on the oil container, it must contain at least the indicated standard. |

### *Engine Oil Level Verification*

**NOTICE**

**Operating the engine with an improper oil level may cause severe engine damage. Follow this procedure to obtain a precise reading of the engine oil level.**

With the engine at normal operating temperature (90 °C (194 °F) at oil tank surface), place vehicle on a level surface and proceed as follows to check oil level:

1. Start engine and let it idle for at least 30 seconds.
2. Stop engine.
3. Open the LH side panel.
4. Unscrew and remove dipstick and wipe clean.

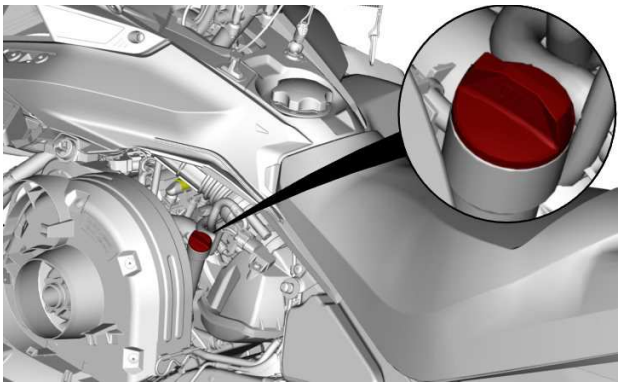

*TYPICAL - LH SIDE OF VEHICLE*

5. Put the dipstick back in the filler tube and fully tighten it
6. Remove dipstick again and check oil level. It should be near or equal to the MAX mark.




*TYPICAL*
1. *MIN*
2. *MAX*
3. *Operating range*

7. To add oil, place a funnel into the filler tube to avoid spillage.

**NOTE:** The oil quantity between MIN. and MAX. mark is approximately 500 ml (16.9 fl oz(US)).

   1. Add a small amount of oil and recheck oil level.
   2. Repeat the operation until oil level reaches the dipstick's MAX mark. Do not overfill.

8. Reinstall dipstick and properly tighten it.
9. Wipe off any oil spillage.
10. Close the LH side panel.

### *Replacing the Engine Oil*

**⚠ CAUTION**

**The engine oil can be very hot. Wait until engine oil is warm.**

**NOTICE**

**Engine oil and oil filter must be replaced at the same time.**

1. Bring engine to its normal operating temperature (90 °C (194 °F) at oil tank surface).
2. Place vehicle on a level surface.
3. Remove the LH side panel.
4. Remove dipstick.

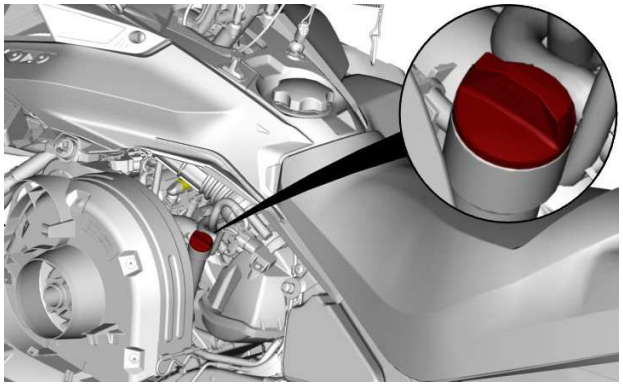

*TYPICAL - LH SIDE OF VEHICLE*

5. Remove oil filter. Refer to *Replacing the Engine Oil Filter* in this subsection.
6. From underneath the vehicle, access the drain plug:

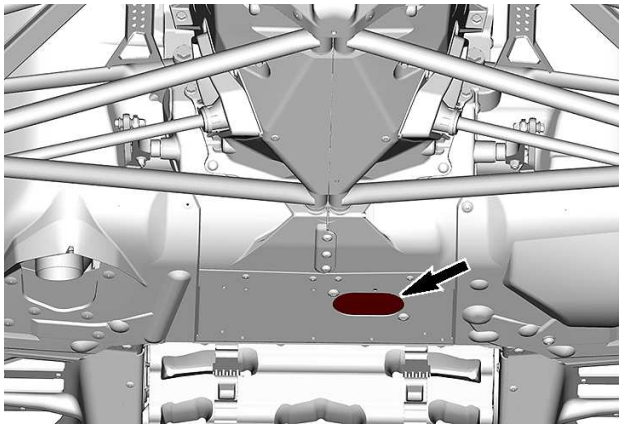

*DRAIN PLUGS ACCESS COVER*

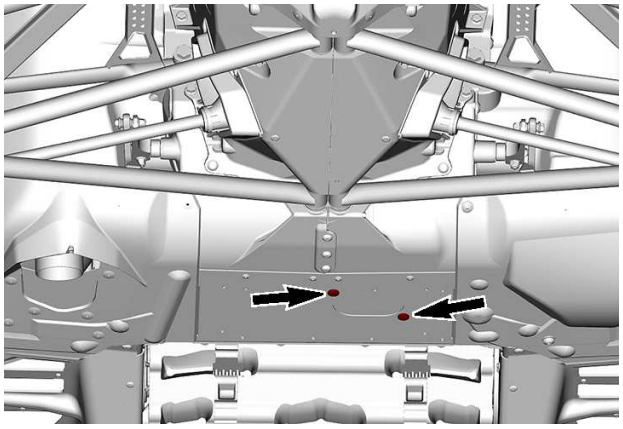

*ACCESS COVER SCREWS*

   1. Remove one access cover retaining screw and loosen the other.
   2. Pivot the access cover to clear the bottom pan opening.

7. Clean drain plug area.

8. Place a drain pan under the bottom pan opening.
9. Remove engine drain plugs in the following order.

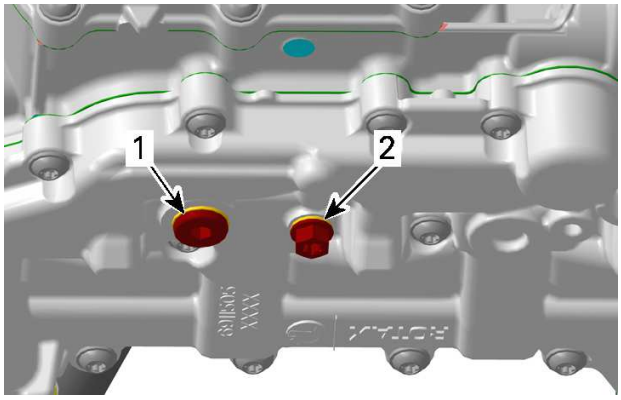


***900 ACE ENGINE SHOWN***
*1. Main drain plug*
*2. Secondary drain plug*

   1. Main drain plug.
   2. Secondary drain plug.
10. Allow oil to drain completely.
11. Install NEW sealing washers on oil drain plugs.

**NOTICE**

**Never use a sealing washer a second time. Always replace with a new one.**

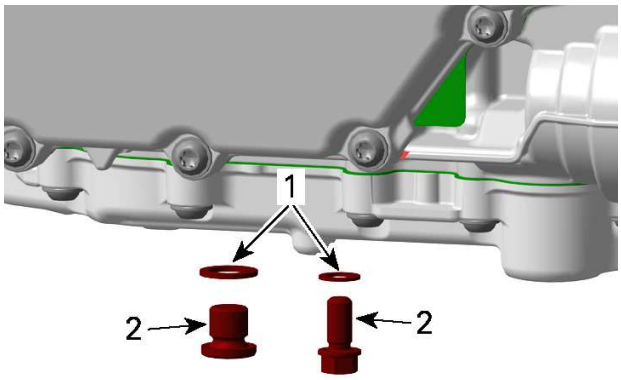


***TYPICAL***
*1. Sealing washers*
*2. Oil drain plugs*

12. Install drain plugs and tighten to the specified torque.

| Tightening Torque | |
|---|---|
| Drain plugs | 15 ± 2 Nm<br>(133 ± 18 lbf-in) |

13. Replace oil filter. Refer to *Replacing the Engine Oil Filter* in this subsection.
14. Refill oil tank at the proper level with the recommended oil.

| Approximate Engine Oil Capacity (with filter) | |
|---|---|
| 600 ACE | 2.1 l<br>(2.22 qt (liq.,US)) |
| 900 ACE | 3.3 l<br>(3.49 qt (liq.,US)) |

15. Reinstall dipstick in oil tank and properly tighten it.
16. Start engine and let it idle for a few minutes.
17. Ensure there are no leaks.
18. Stop engine and check oil level as explained in this subsection. Refill if necessary.
19. Dispose oil and filter as per your local environmental regulations.

### *Replacing the Engine Oil Filter*

#### *Removing the Oil Filter*

1. Remove the RH side panel.
2. Remove the muffler. Refer to *exhaust system* subsection.
3. Clean oil filter area.
4. Remove:

   – Oil filter cover screws
   – Oil filter cover with O-ring (discard it)
   – Oil filter.

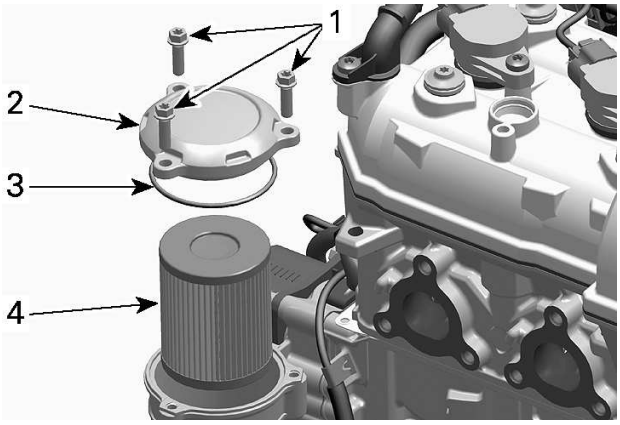


***TYPICAL***
*1. Oil filter cover screws*
*2. Oil filter cover*
*3. O-ring (discard it)*
*4. Oil filter*

5. Dispose filter as per your local environmental regulations.

#### *Installing the Oil Filter*

1. Check the oil filter inlet and outlet orifices inside oil filter housing (integrated in magneto cover) for dirt and contaminations.

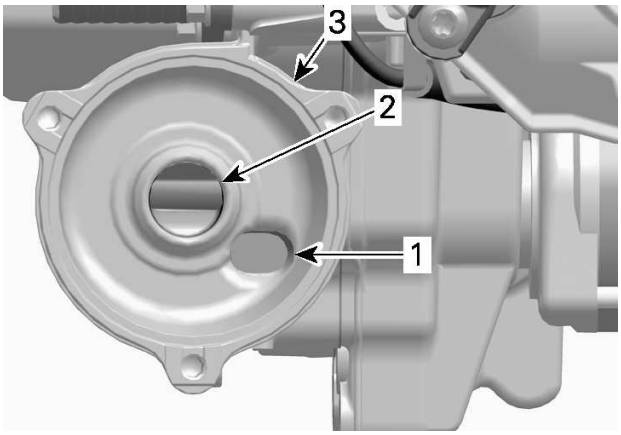


1. *Oil inlet orifice from the oil pressure pump*
2. *Oil outlet orifice to the engine lubrication system*
3. *Oil filter housing*

2. Install a NEW O-ring on oil filter cover.
3. Lubricate filter seal and cover O-ring with engine oil.




1. *Lubricate with engine oil*

4. Install the oil filter cover.
5. Tighten oil filter cover screws to the specified torque.

| Tightening Torque | |
|---|---|
| Oil filter cover screws | 9 ± 1 Nm<br>(80 ± 9 lbf-in) |

## Inspection

### *Testing the Engine Oil Pressure*

1. Remove the oil filter cover.
2. Completely tighten adapter hose on oil pressure test cap.

| | |
|---|---|
| **Oil pressure hose (P/N 529036394)** |  |
| **Oil pressure test cap (P/N 529036158)** |  |

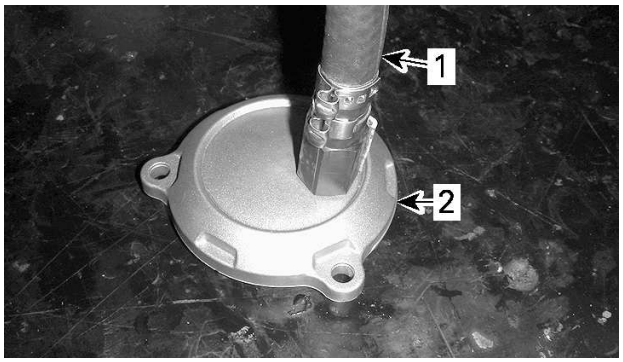


1. *Adapter hose*
2. *Oil pressure test cap*

3. Install oil pressure test cap on oil filter housing. Position adapter hose near engine.

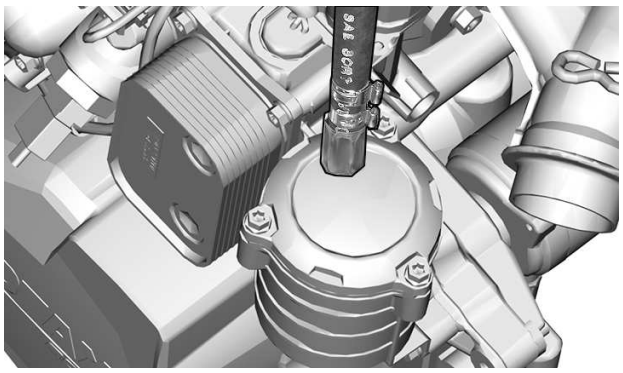

4. Connect pressure gauge to the oil pressure hose.

| | |
|---|---|
| **Pressure gauge (P/N 529036395)** |  |

5. Start engine and check oil pressure.

| Engine Oil Pressure @ 100 °C (212 °F) Engine Oil Temperature | | |
|---|---|---|
| **Engine Type** | **Engine Speed** | **Minimum Pressure** |
| 600 ACE<br>900 ACE | Idle | 60 kPa<br>(8.7 lbf/in²) |
| | 4000 to 7250 RPM | 350 kPa<br>(50.8 lbf/in²) |

If the engine oil pressure is out of specification, refer to *Troubleshooting* in this subsection.

6. Remove engine oil pressure test tools.

7. Install oil filter cover. Refer to *Replacing the Engine Oil Filter* in this subsection.
8. Install all other removed parts.

## Troubleshooting

Always check for fault codes. If a fault code is detected, service the fault code first.

***Troubleshooting***

**1. Low Or No Engine Oil Pressure**

Oil level is too low.

– *Refill engine oil.*

– *Check for high oil consumption. See below.*

– *Check for oil leaks (oil leaking out of leak indicator hole, gaskets, oil seal or O-rings). Repair or replace.*

Defective or clogged oil filter

– *Replace engine oil and filter.*

Use of a bad grade oil

– *Replace engine oil with BRP recommended oil.*

Oil pressure regulator valve sticks open, or spring load is insufficient.

– *Clean oil regulator piston and its bore. Replace if necessary.*

– *Measure spring free length. Replace if out of specification.*

Defective oil pressure switch, oil pressure warning light does not disappear.

– *Test the OPS, see procedure in this subsection.*

Oil pump(s) worn or damaged.

– *Check if oil pump drive gears are damaged. Replace if necessary.*

– *Check oil pump rotors and its bore for wear limits. Replace if out of specification.*

Engine oil strainer is clogged.

– *Remove and clean engine oil strainer.*

Heavy wear on plain bearings.

– *Check radial clearance of plain bearings. Replace if out of specification.*

***Troubleshooting***

**1. High Oil Consumption**

Oil in breathing system.

– *Check if breather V-ring is brittle, hard or damaged. Replace V-ring.*

– *Check if oil separator cover is damaged or missing.*

Valve stem seals worn or damaged.

– *Replace valve stem seals.*

Piston rings worn out (blue colored exhaust smoke).

– *Replace piston rings.*

***Troubleshooting***

**1. Oil Contamination (White Appearance)**

Oil cooler gasket leaking.

– *Replace gasket. Change engine oil.*

Cylinder head screws not properly tightened.

– *Retighten screws with recommended torque. Change engine oil.*

Cylinder head gasket leaking.

– *Replace cylinder head gasket. Change engine oil.*

Damaged engine parts (e.g. cylinder head, cylinder block,..).

– *Check damages or cracks on engine parts. Replace defective part. Change engine oil.*

Oil seal and rotary seal on water pump shaft leaking.

– *Replace oil seal, rotary seal and water pump shaft. Change engine oil.*

## Procedures

***Oil pressure switch (OPS)***

***OPS Activation***

The oil pressure switch activates when the engine oil pressure is lower than following specified pressure range.

| Oil Pressure Switch Activation Range | |
|---|---|
| 600 ACE<br>900 ACE | 20 to 40 kPa<br>(2.9 to 5.8 lbf/in²) |

**NOTE:** ECM does not trigger the OPS signal below following values:

| Minimum RPM For Oil Pressure Switch Signal Detection | |
|---|---|
| 600 ACE<br>900 ACE | 4500 rpm |

### *OPS Location*

### *600 ACE and 900 ACE Models*

The OPS is located on the front of the engine, beside the left front engine mount.

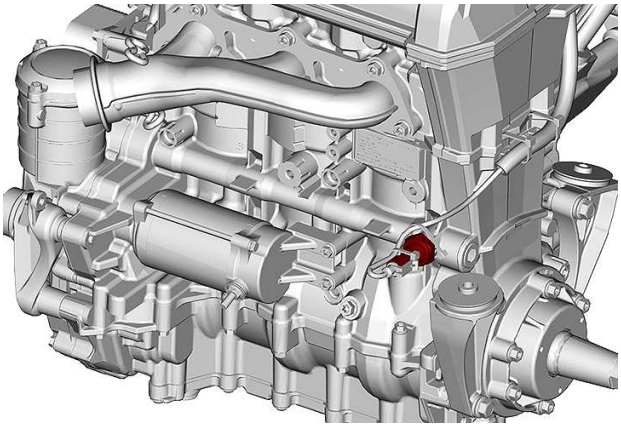

*TYPICAL - 900 ACE ENGINE SHOWN*

### *Inspecting the OPS*

1. Perform *Engine Oil Pressure Test* to confirm oil pressure is adequate.
2. Check the oil pressure switch. Perform *Testing the OPS Resistance* and *Testing the OPS Circuit Continuity*.

### *Testing the OPS Resistance*

The engine must be warm to check the oil pressure switch properly.

**⚠ WARNING**

**Be careful when working near hot parts. Always wear long sleeves and gloves.**

1. ***All Models***
2. Cut locking tie and disconnect OPS connector.

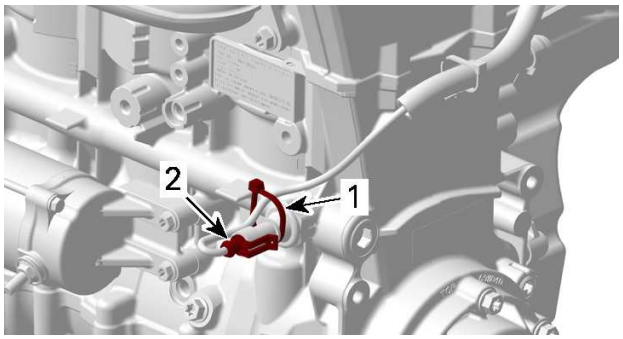


***900 ACE ENGINE SHOWN***
*1. Locking tie*
*2. OPS connector*

3. Check oil pressure switch resistance as per the following table.

| **Fluke 115 multimeter (P/N 529035868)** |  |
|---|---|

| OPS Resistance Test (Engine Not Running) | | |
|---|---|---|
| **OPS Pin** | **Ground** | **Specification** |
| 1 | Engine ground | Close to 0 Ω (normally closed switch) |

4. If resistance is out of specification, replace the oil pressure switch.
5. If the resistance is correct, continue procedure.
6. Start the engine.
7. Check oil pressure switch resistance as per the following table.

| OPS Resistance Test (Engine Running) | | |
|---|---|---|
| **OPS Pin** | **Ground** | **Specification** |
| 1 | Engine ground | Infinitely high (OL) |

8. If resistance is out of specification, replace the oil pressure switch.
9. If the resistance is correct, check the oil pressure switch circuit continuity.

### *Testing the OPS Circuit Continuity*

1. Disconnect the ECM-A connector. Refer to *Electronic Control Module (ECM) - GEN1* subsection.
2. Install the ECM-A connector on the ECM adapter tool.

| ECM adapter tool (P/N 529036166) |  |
|---|---|

3. Check continuity as per the following table.

| Fluke 115 multimeter (P/N 529035868) |  |
|---|---|

| OPS Circuit Continuity Test | | |
|---|---|---|
| OPS Connector Pin | ECM Adapter Pin | Specification |
| 1 | E3 | Close to 0 Ω |

4. If the continuity is good and all other tests are performed, try a NEW ECM.
5. If the continuity is bad, repair or replace defective wire or connectors.

### *Removing the OPS*

1. Cut locking tie and disconnect the OPS switch connector.
2. Unscrew and remove the OPS.

### *Installing the OPS*

1. Install the oil pressure switch and tighten to specification.

| Loctite 243 (blue) |
|---|

| Tightening Torque | |
|---|---|
| 600 ACE<br>900 ACE | 12 ± 1 Nm<br>(106 ± 9 lbf-in) |

2. Install all other removed parts.

**NOTICE**

**When installing the locking tie on the OPS connector, avoid making a sharp bend in the wires.**

### *Oil Filler Tube*

### *Oil Filler Tube Location*

The oil filler tube is located on the rear left side of the engine, on the oil tank.

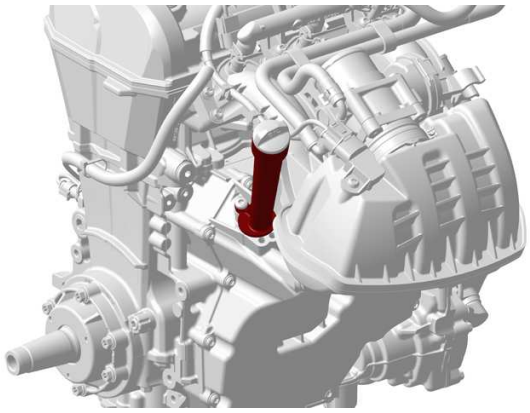

*TYPICAL - 900 ACE ENGINE SHOWN*

### *Removing the Oil Filler Tube*

1. Remove oil filler tube retaining screw.

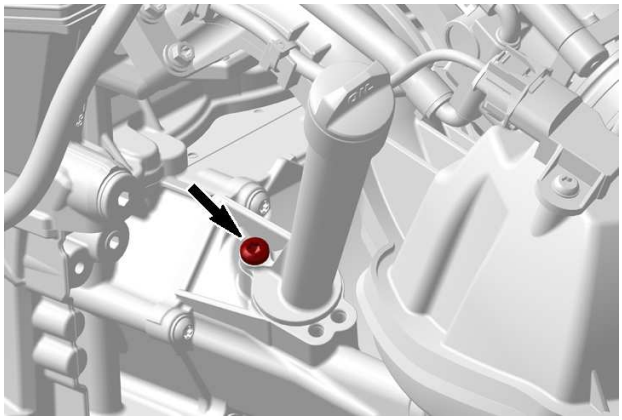

*TYPICAL - 900 ACE ENGINE SHOWN*

2. Pull filler tube out of oil tank cover.
3. Remove O-rings and discard them.

### *Installing the Oil Filler Tube*

1. Install NEW O-rings on oil filler tube.

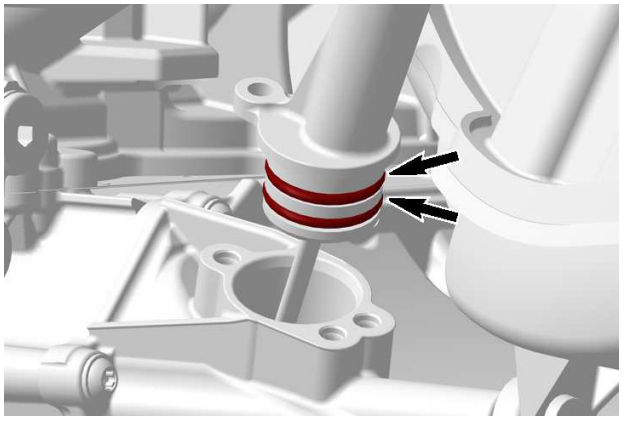

2. Lubricate O-rings.

| Dow Corning 111 |
|---|

3. Install oil filler tube.
4. Tighten retaining screw to specification.

| Tightening Torque | |
|---|---|
| Oil filler tube retaining screw | 7 ± 0.8 Nm (62 ± 7 lbf-in) |

5. Install all other removed parts.

### *Oil Tank*

### *Removing the Oil Tank Cover*

1. Drain engine oil. Refer to *Replacing the Engine Oil* in this subsection.
2. Remove engine from vehicle. Refer to *Engine Removal and Installation* subsection.
3. Remove intake manifold. Refer to *Intake Manifold - GEN1* subsection.
4. Place a drain pan underneath oil tank.
5. Unscrew oil tank cover retaining screws.

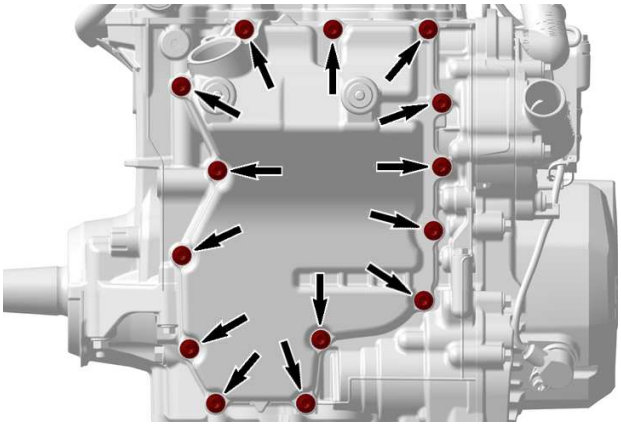

*600 ACE ENGINE*

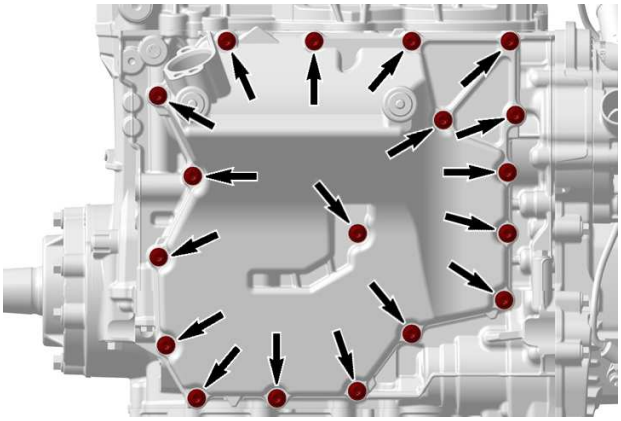

*900 ACE ENGINE*

6. Remove oil tank from the engine and discard gasket.

### *Installing the Oil Tank Cover*

1. Install NEW gasket.
2. Install oil tank on engine, then tighten screws in two steps as follows:
   1. Tighten screws to the following specified torque using the specified sequence.

| Tightening Torque | | |
|---|---|---|
| Oil tank screws | Step A | 5 ± 0.6 Nm (44 ± 5 lbf-in) |

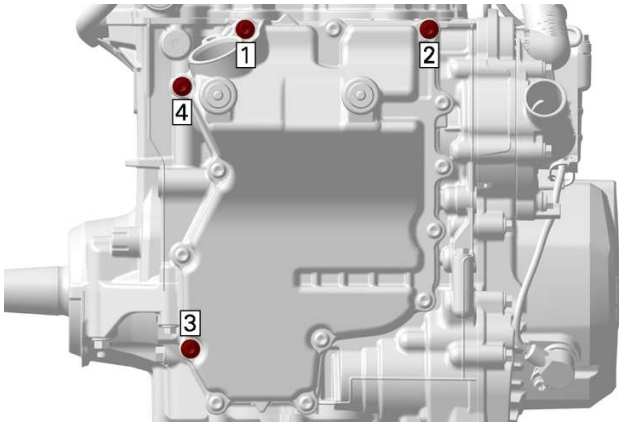


*600 ACE ENGINE - TIGHTENING SEQUENCE STEP A*

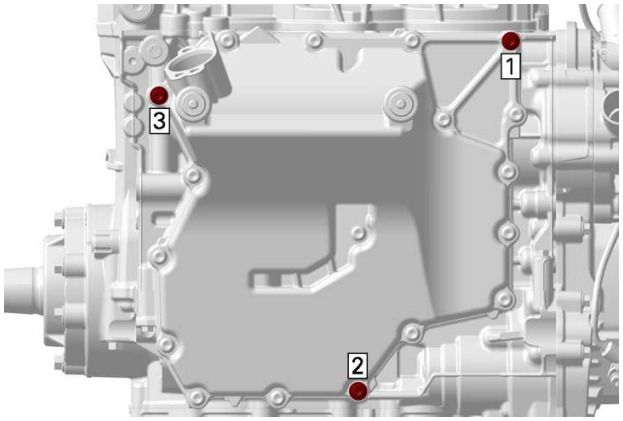


*900 ACE ENGINE - TIGHTENING SEQUENCE STEP A*

   2. Tighten screws to the following specified torque using the specified sequence.

| Tightening Torque | | |
|---|---|---|
| Reused cylinder block | Step B | 9 ± 1 Nm (80 ± 9 lbf-in) |
| New cylinder block | | 11 ± 1 Nm (97 ± 9 lbf-in) |

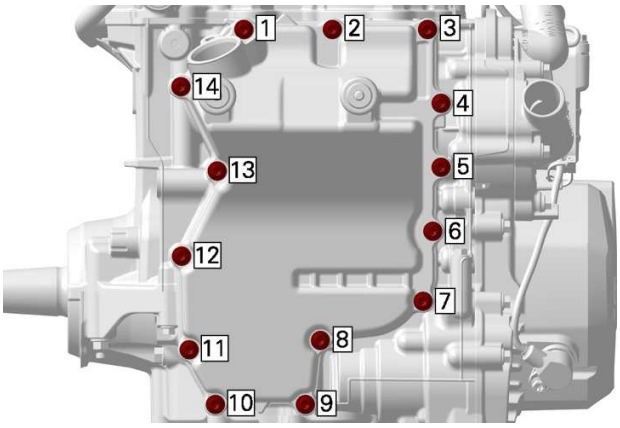


*600 ACE ENGINE - TIGHTENING SEQUENCE STEP B*

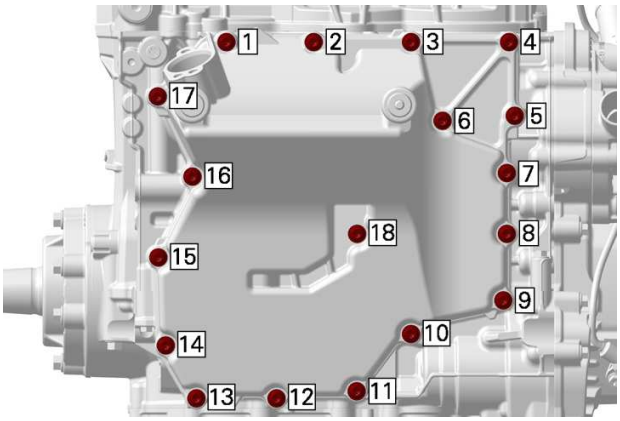


*900 ACE ENGINE - TIGHTENING SEQUENCE STEP B*

3. Wipe up any oil spillage.
4. Install intake manifold. Refer to *Intake Manifold - GEN1* subsection.
5. Install engine in vehicle. Refer to *Engine Removal and Installation* subsection.
6. Fill up oil tank and check oil level. Refer to *Replacing the Engine Oil* in this subsection.

## *Oil Cooler*

### *Oil Cooler Location*

The oil cooler is located on the right side of the engine, beside the oil filter.

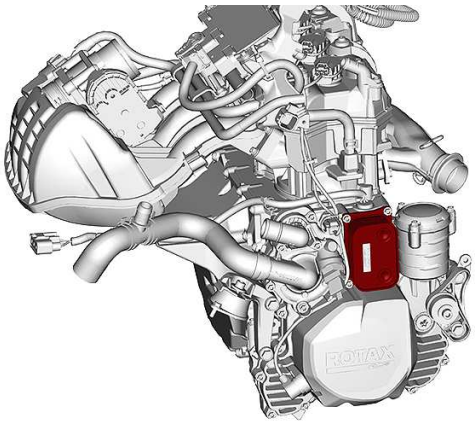

*TYPICAL - 900 ACE ENGINE SHOWN*

### *Removing the Oil Cooler*

1. Drain engine oil. Refer to *Replacing the Engine Oil* in this subsection.
2. Drain cooling system. Refer to *Cooling System - GEN1* subsection.
3. Remove oil cooler retaining screws.

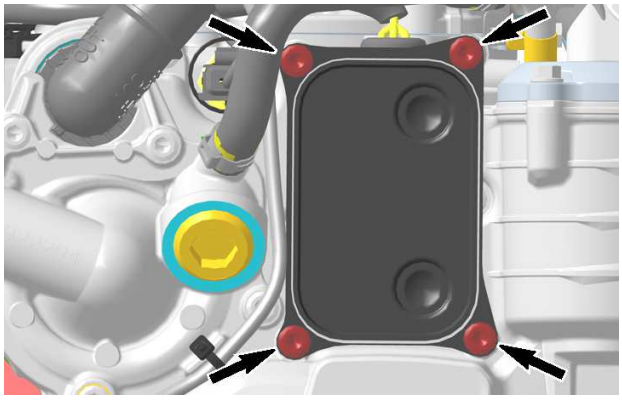

*TYPICAL - 900 ACE ENGINE SHOWN*

4. Place rags or towels under oil cooler to catch remaining oil and coolant.
5. Remove oil cooler and discard gasket.

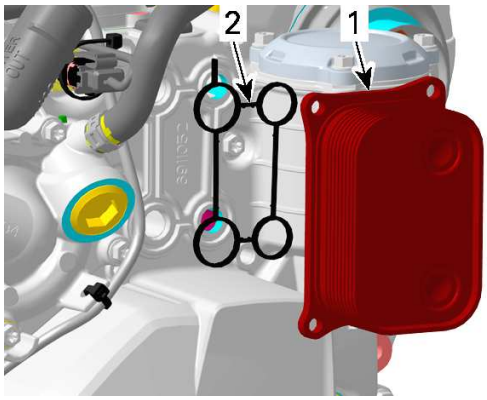


*TYPICAL - 900 ACE ENGINE SHOWN*
1. *Oil cooler*
2. *Gasket (discard it)*

### *Inspecting the Oil Cooler*

Check oil cooler for cracks and other damage.

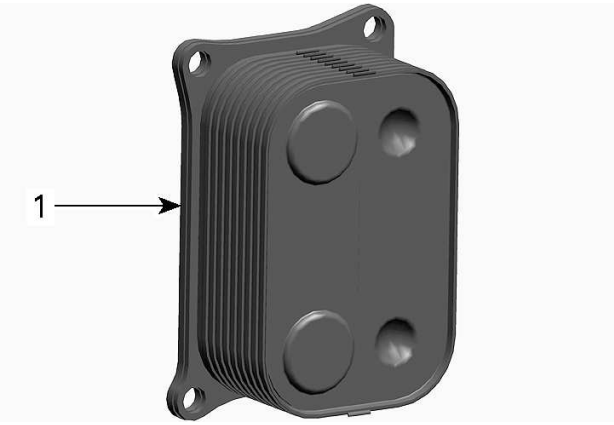


*1. Check for cracks*

Replace parts as necessary.

### *Installing the Oil Cooler*

1. The installation is the reverse of the removal procedure. However, pay attention to the following.
2. Install NEW oil cooler gasket.
3. Tighten oil cooler screws in two steps to the specified torques using the illustrated sequence.

| Tightening Torque | | |
|---|---|---|
| Oil cooler screws | Step A | 5 ± 0.6 Nm (44 ± 5 lbf-in) |

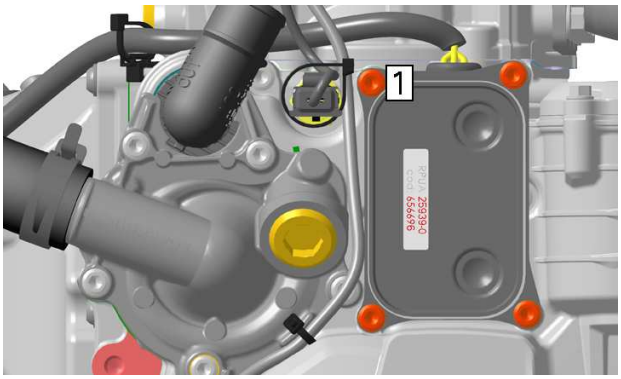


***TYPICAL - TIGHTENING SEQUENCE STEP A***

| Tightening Torque | | |
|---|---|---|
| Oil cooler screws | Step B | 9 ± 1 Nm (80 ± 9 lbf-in) |

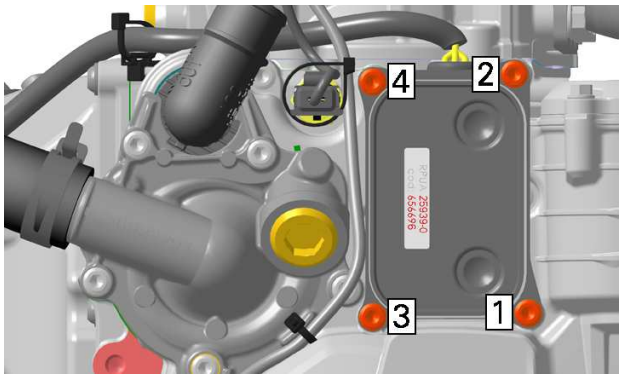


***TYPICAL - TIGHTENING SEQUENCE STEP B***

4. Wipe up any oil and coolant spillage.
5. Fill up oil tank and check oil level. Refer to *Replacing the Engine Oil* in this subsection.
6. Refill and bleed cooling system. Refer to *Cooling System - GEN1* subsection.

### *Engine Oil Pressure Regulator*

### *Oil Pressure Regulator Location*

The engine oil pressure regulator is located inside the magneto cover.

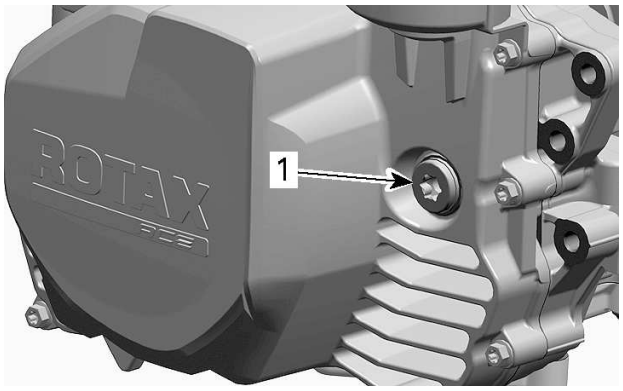


*1. Engine oil pressure regulator*

### *Removing the Oil Pressure Regulator*

1. Remove muffler, refer to *Exhaust System* subsection.
2. Drain engine oil. Refer to *Replacing the Engine Oil* in this subsection.
3. Remove:
   - Regulator plug
   - Sealing washer (discard it).
4. Pull oil pressure regulator parts out of the magneto cover.

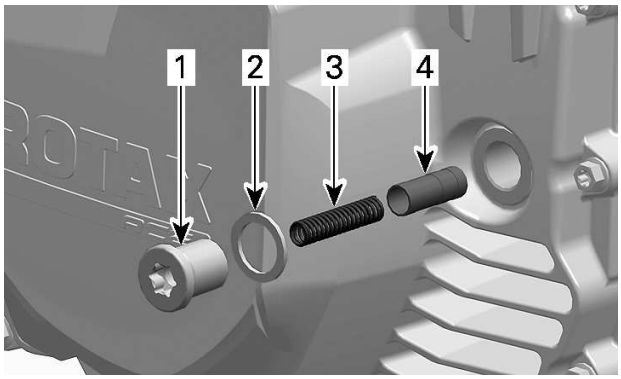


1. *Plug*
2. *Sealing washer (discard it)*
3. *Regulator spring*
4. *Regulator piston*

### *Inspecting the Oil Pressure Regulator*

1. Clean bore and thread in the magneto cover of any contamination.
2. Inspect oil pressure regulator piston and bore in cylinder block for scoring or other damages.
3. Check if piston moves easily in its bore.
4. Check compression spring for free length.

| Spring Free Length | |
|---|---|
| New nominal | 46 mm (1.811 in) |
| Service limit | 45 mm (1.772 in) |

5. Visually check compression spring for squareness.
6. Replace worn or damaged components.

### *Installing the Oil Pressure Regulator*

The installation is the reverse of the removal procedure. However, pay attention to the following.

1. Apply engine oil on regulator piston.
2. Install a NEW sealing washer on plug.
3. Tighten regulator plug to the specified torque.

| Tightening Torque | |
|---|---|
| Oil pressure regulator plug | 17 ± 2 Nm (150 ± 18 lbf-in) |

4. Wipe up any oil spillage.
5. Fill up oil tank and check oil level. Refer to *Replacing the Engine Oil* in this subsection.
6. Install all other removed parts. Refer to applicable subsections.

### *Oil Pump Drive Gears*

#### *Oil Pump Drive Gear Location*

The oil pump gears are located on the MAG side, behind the magneto cover.

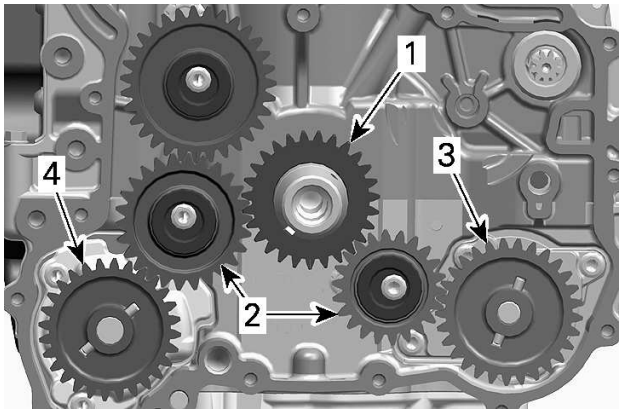


1. *Oil pump drive gear*
2. *Intermediate gears*
3. *Oil pressure pump gear*
4. *Oil suction pump gear*

### *Removing the Oil Pump Drive Gear*

1. Refer to *Magneto And Starter - GEN1* subsection to remove:
   - Magneto cover
   - Rotor
   - Sprag clutch gear.
2. Unscrew oil pump intermediate gear screws.

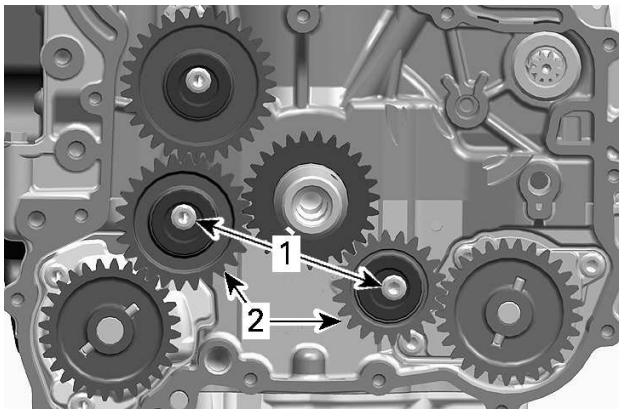


1. *Retaining screws*
2. *Intermediate gears*

3. Remove bearing sleeves and oil pump intermediate gears.

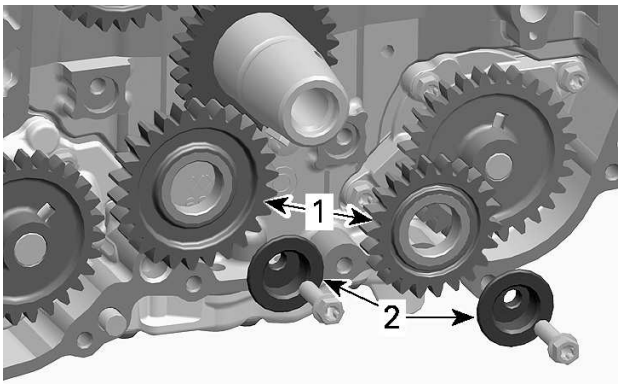


*1. Intermediate gears*
*2. Bearing Sleeves*

4. Remove oil pump gears and needle pins.

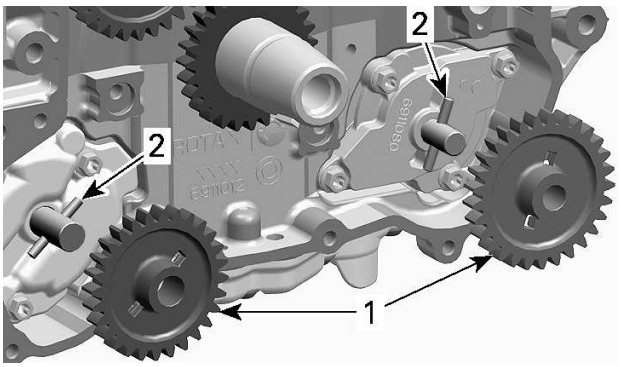


*1. Oil pump gears*
*2. Needle pins*

### *Inspecting the Oil Pump Drive Gear*

Inspect gears for wear, cracks or other damage.

Replace if damaged.

### *Installing the Oil Pump Drive Gear*

The installation is the reverse of the removal procedure. However, pay attention to the following.

1. Be sure to not intermix oil pump gears, see next illustration.

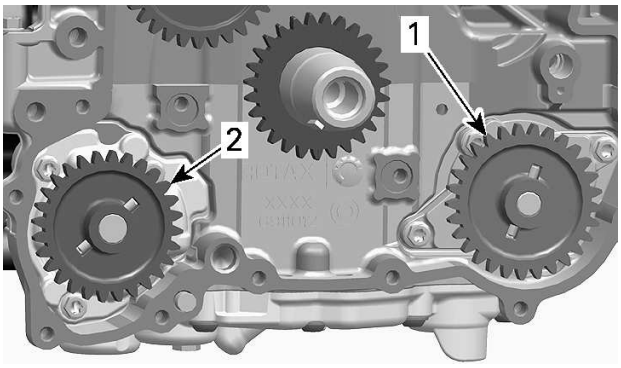


*1. 29 teeth oil pump gear (BROWN)*
*2. 28 teeth oil pump gear (BLACK)*

1. Install the 29 teeth oil pump gear (BROWN) on oil pressure pump.
2. Install the 28 teeth oil pump gear (BLACK) on oil suction pump.

2. Lubricate intermediate gears bearing sleeves with engine oil, then install gears and tighten screws to specified torque.

| Tightening Torque | |
|---|---|
| Intermediate gear screws | 9 ± 1 Nm (80 ± 9 lbf-in) |

3. Install all other removed parts.
4. Fill up oil tank and check oil level. Refer to *Replacing the Engine Oil* in this subsection.

### *Oil Pressure Pump*

### *Oil Pressure Pump Location*

The oil pressure pump is located in the cylinder block, behind the magneto cover.

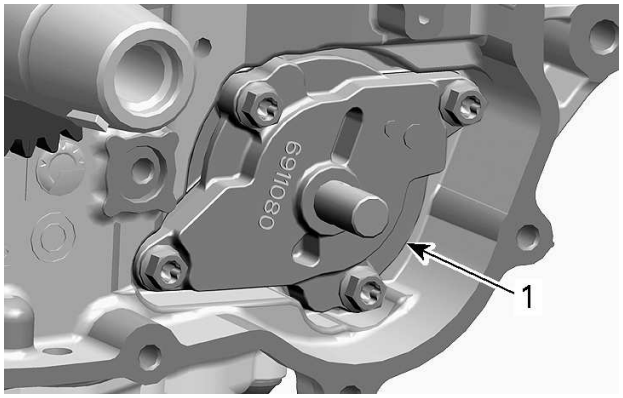


*1. Oil pressure pump*

### *Removing the Oil Pressure Pump*

1. Remove *Oil Pump Drive Gears*, see procedure in this subsection.
2. Remove oil pump cover.

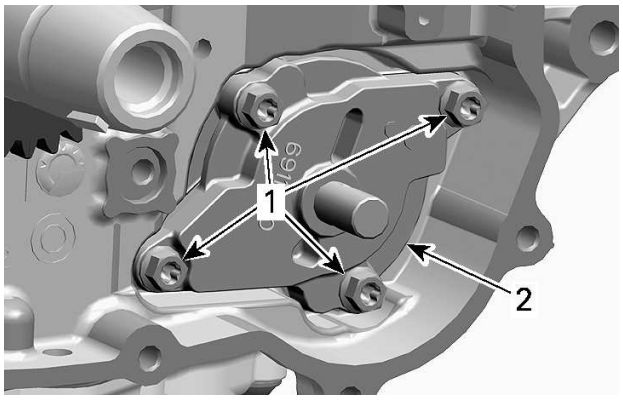


*1. Retaining screws*
*2. Oil pump cover*

3. Remove following parts.

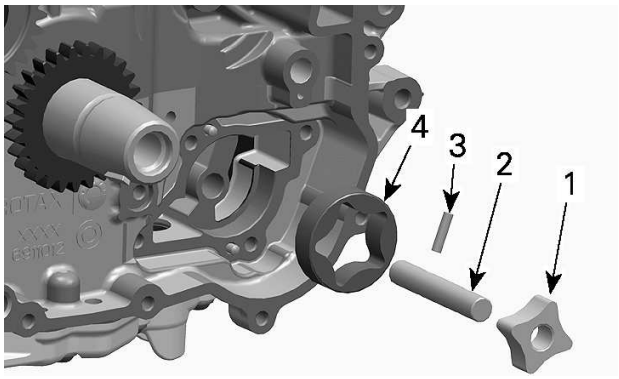


1. *Inner rotor*
2. *Oil pump shaft*
3. *Needle pin*
4. *Outer rotor*

### *Inspecting the Oil Pressure Pump*

1. Inspect oil pump and oil pump cover bore for marks, scratches or other damage. Replace any damaged parts.
2. Check oil pump cover for damages and for surface straightness with a straight edge.
3. Check inner rotor for corrosion, worn pin slots or other damages. If so, replace inner and outer rotor at the same time.

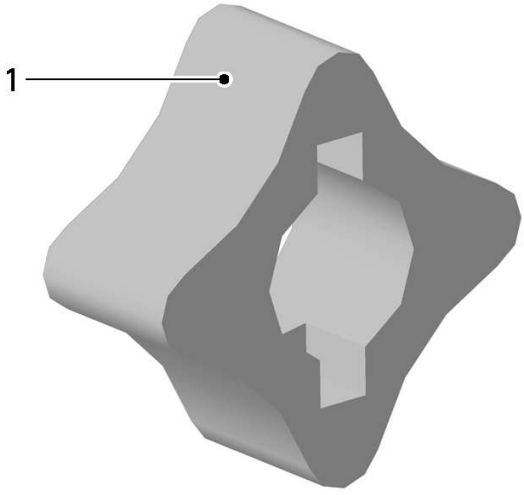


1. *Pitting on the teeth*

### *Radial Clearance*

1. Using a feeler gauge, measure the clearance of outer rotor and inner rotor as indicated by the arrows.

| **Feeler gauge** | |
|---|---|

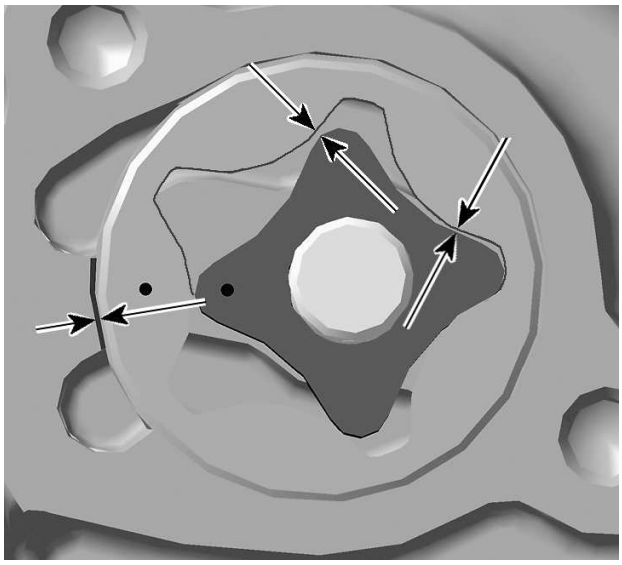

| **Oil Pump Radial Clearance** | |
|---|---|
| Service limit | 0.25 mm (.0098 in) |

**NOTE:** If clearance of inner and outer rotors exceeds the tolerance, replace oil pump.

### *Axial Clearance*

1. Measure outer rotor thickness with a micrometer.

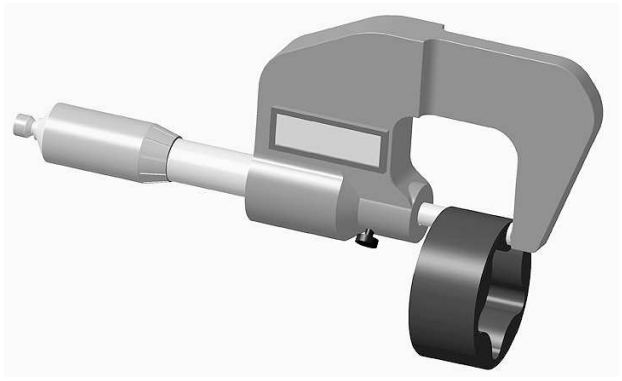

***OUTER ROTOR THICKNESS***

2. Using a depth gauge, measure the depth of oil pump bore in the lower crankcase.

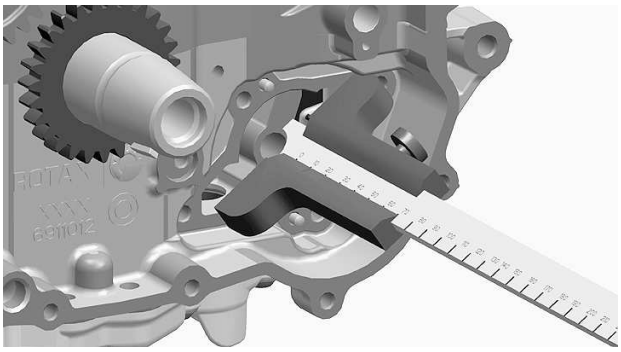

*OIL PUMP BORE DEPTH (OIL PUMP COVER)*

3. Substract bore depth from rotor thickness to obtain axial clearance.

| Oil Pump Axial Clearance | |
|---|---|
| Service limit | 0.15 mm (.0059 in) |

**NOTE:** When the axial clearance of the oil pump assembly increases, the oil pressure decreases.

### *Installing the Oil Pressure Pump*

The installation is the reverse of the removal procedure. However, pay attention to the following.

1. Lubricate outer rotor with engine oil.

**NOTICE**

**Install rotors with the marks outwards.**

2. Install outer rotor in crankcase oil pump bore.

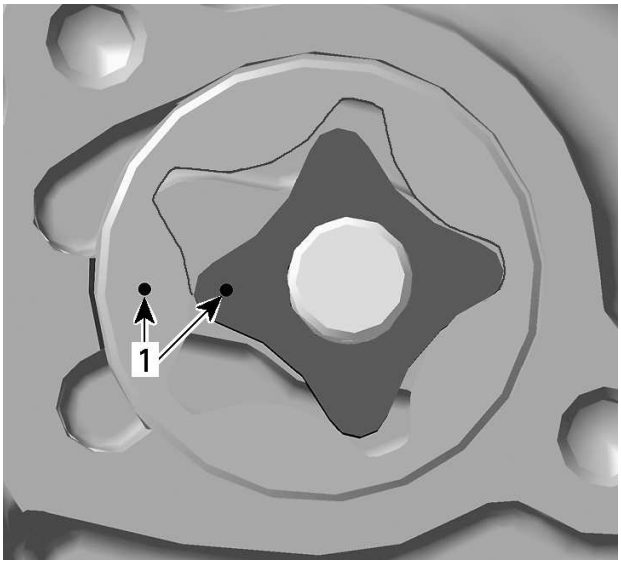


***TYPICAL***
*1. Marks on inner and outer rotor*

3. Install needle pin in oil pump shaft.

**NOTICE**

**The oil pump shaft is not symmetrical, the longer side must be installed inward.**

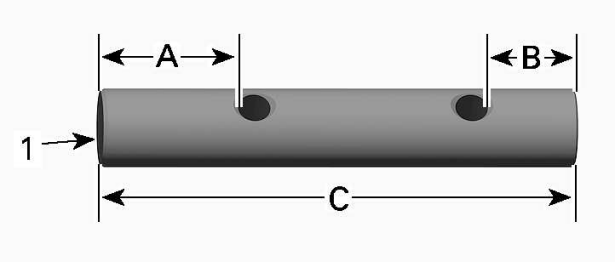


*1. Towards engine*

| Oil Pump Shaft Measurement | | | |
|---|---|---|---|
| Engine Model | A | B | C |
| 600 ACE<br>900 ACE | 17.23 mm (.68 in) | 11.43 mm (.45 in) | 60.5 mm (2.38 in) |

4. Place inner rotor on the oil pump shaft. Lubricate oil pump shaft and inner rotor with engine oil.
5. Install oil pump assembly in the crankcase.

**NOTE:** check if both needle pins are pressed into the crankcase.

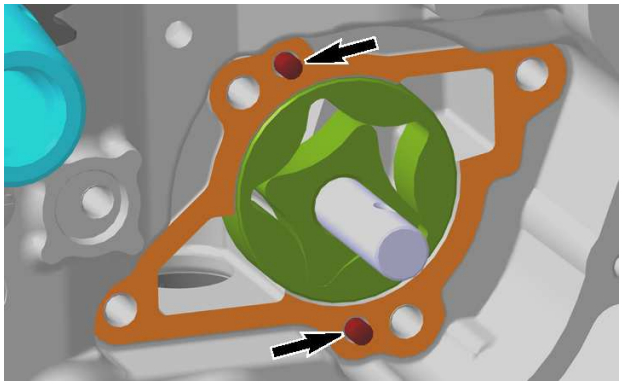

***NEEDLE PINS***

Install oil pump cover and tighten retaining screws to the following specified torque using the specified sequence.

| Tightening Torque | |
|---|---|
| Oil pump cover screws | 9 ± 1 Nm (80 ± 9 lbf-in) |

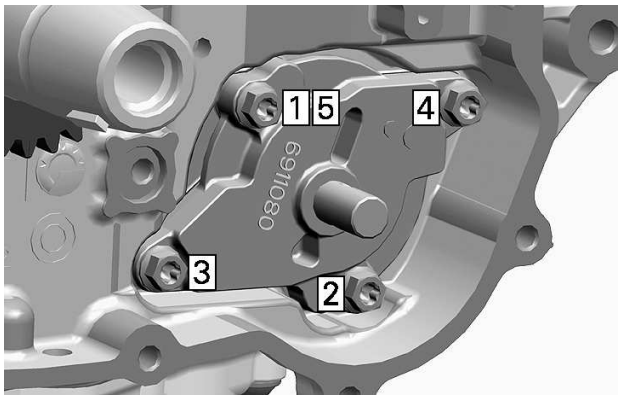


*TIGHTENING SEQUENCE*

6. Turn oil pump shaft and check for smooth operation of the oil pump assembly and axial play of the oil pump shaft.
7. Fill up oil tank and check oil level. Refer to *Replacing the Engine Oil* in this subsection.

   Start engine and make sure oil pressure is within specifications (refer to *Testing the Engine Oil Pressure* in this subsection).

### *Oil Suction Pump Module*

#### *Oil Suction Pump Module Location*

The oil suction pump module is located in the cylinder block, behind the magneto cover.

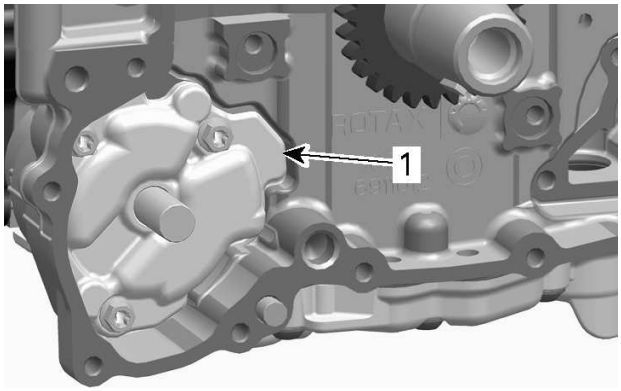


*1. Oil suction pump module*

#### *Disassembling the Oil Suction Pump Module*

1. Remove *Oil Pump Drive Gears*, see procedure in this subsection.
2. Remove oil pump module cover.

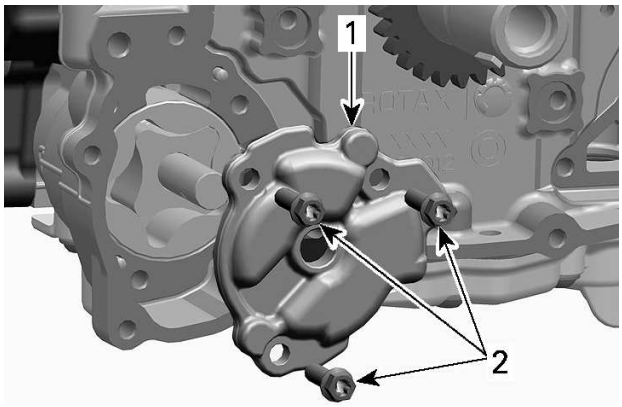


*1. Oil pump module cover*
*2. Retaining screws*

3. Disassemble the large oil suction pump as shown.

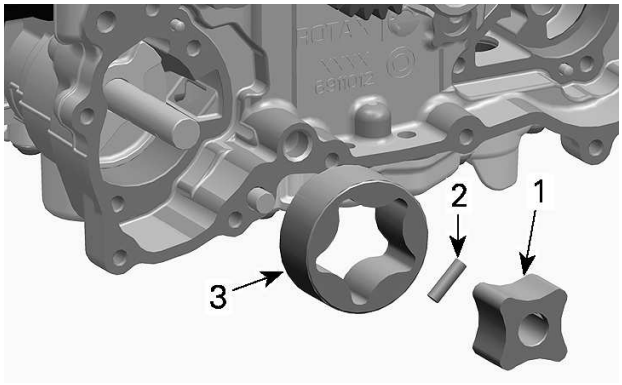


*1. Inner rotor*
*2. Needle pin*
*3. Outer rotor*

4. Disassemble the small oil suction pump as shown.

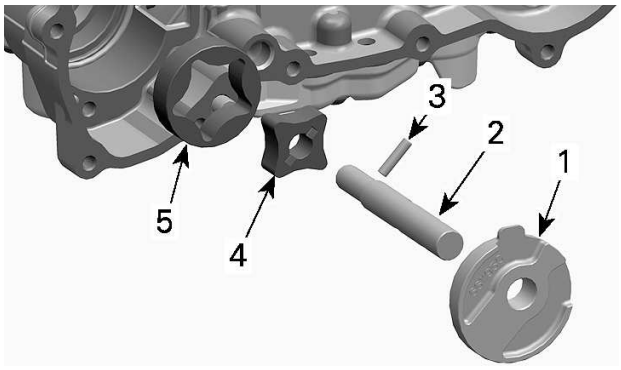


*1. Oil pump cover*
*2. Oil pump shaft*
*3. Needle pin*
*4. Inner rotor*
*5. Outer rotor*

5. Remove and discard the oil pump cover O-ring.

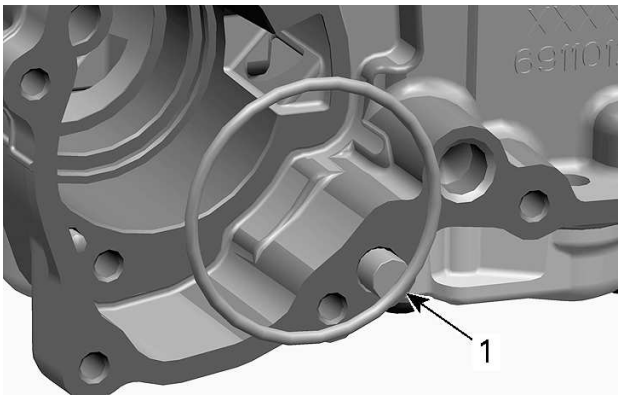


*1. Oil pump cover O-ring*

### *Inspecting the Oil Suction Pumps*

The inspection of both oil suction pumps is the same as for the oil pressure pump. Refer to *Oil Pressure Pump* in this subsection.

### *Assembling the Oil Suction Pump Module*

The assembly is the reverse of the disassembly procedure. However, pay attention to the following.

1. Lubricate small oil suction pump outer rotor with engine oil.

**NOTICE**

**When installing the oil pump rotors, make sure both marks are pointing toward the inside of the crankcase.**

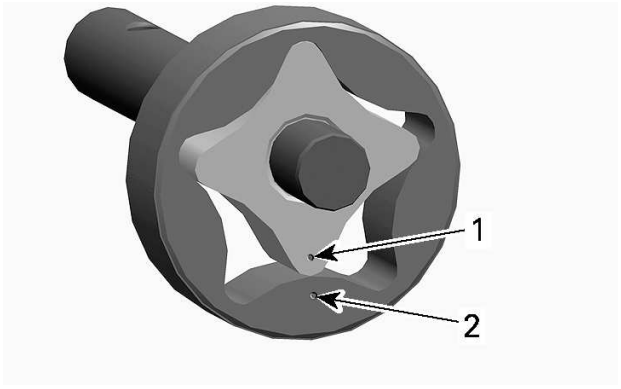


*1. Mark on inner rotor*
*2. Mark on outer rotor*

2. Install small oil suction pump outer rotor into crankcase oil pump bore.

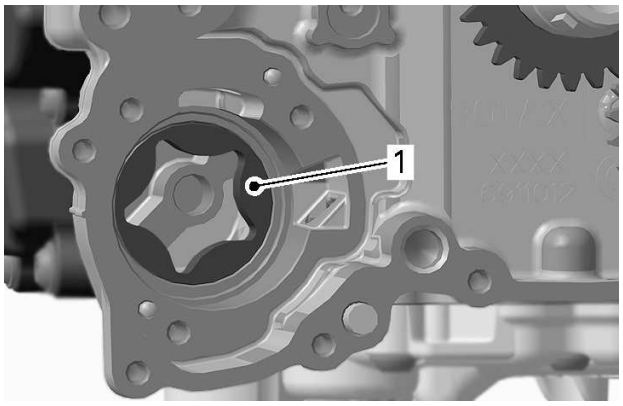


*1. Small oil suction pump outer rotor*

3. Install the needle pin in the bore of the oil pump shaft and place the small inner rotor on the shaft.

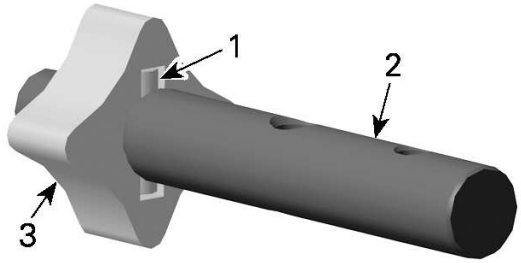


*1. Needle pin*
*2. Oil pump shaft*
*3. Small suction pump inner rotor*

4. Lubricate oil pump shaft and inner rotor with engine oil.
5. Install oil pump shaft assembly into the crankcase.

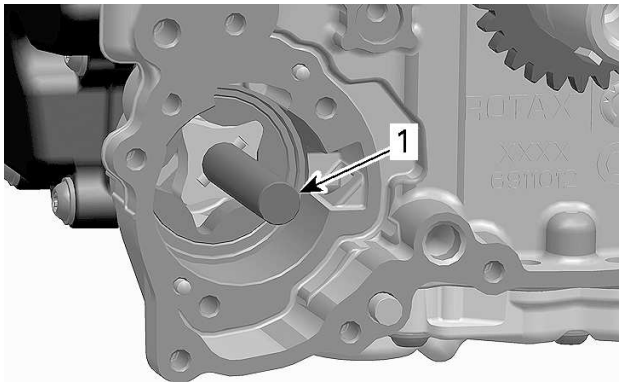


*1. Oil pump shaft with small oil suction pump*

6. Install a NEW oil pump cover O-ring.

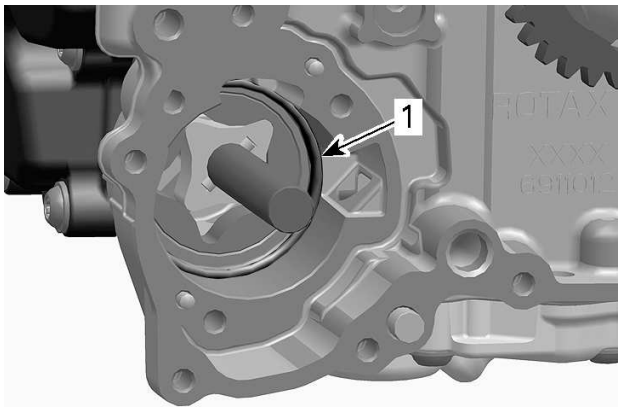


*1. Oil pump cover O-ring*

7. Lubricate both sides of the oil pump cover with engine oil.
8. Align tab of the oil pump cover with the upper recess in the crankcase. Push cover in until a click is heard, indicating the cover is properly installed.

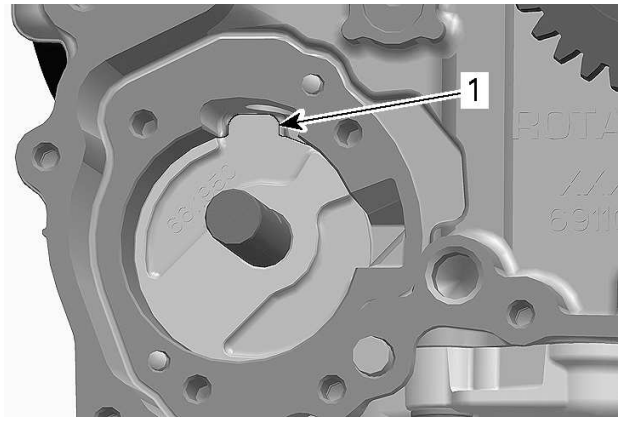


*1. Oil pump cover tab properly positioned*

9. Install large oil suction pump needle pin.
10. Install large oil suction pump inner rotor and outer rotor with the marks outwards.

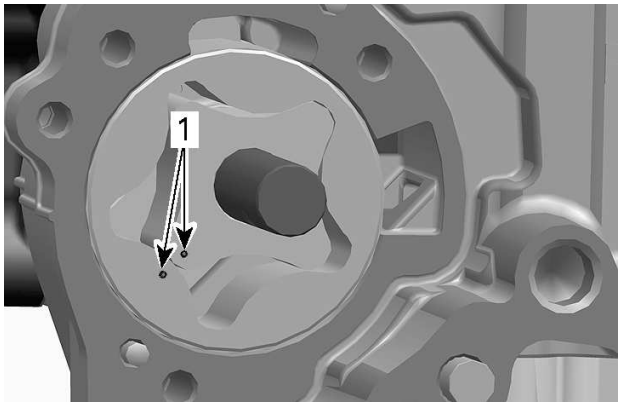


*1. Marks on inner and outer rotor*

11. Lubricate large oil suction pump parts with engine oil.

**NOTE:** Check if both needle pins are pressed into the crankcase.

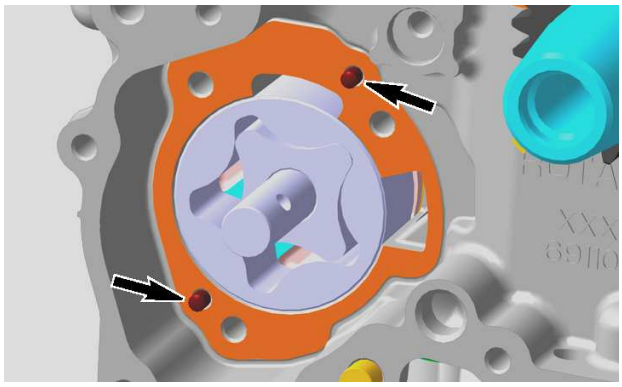

***NEEDLE PINS***

12. Install oil pump cover and tighten retaining screws to the following specified torque using the specified sequence.

| Tightening Torque | |
|---|---|
| Oil pump cover screws | 9 ± 1 Nm<br>(80 ± 9 lbf-in) |

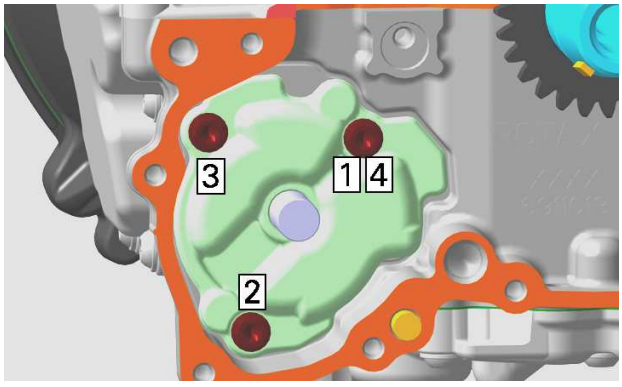


***TIGHTENING SEQUENCE***

13. Turn oil pump shaft and check for smooth operation of the oil pump assembly and axial play of the oil pump shaft.
14. Install other removed parts.
15. Fill up oil tank and check oil level. Refer to *Replacing the Engine Oil* in this subsection.

    Start engine and make sure oil pressure is within specifications (refer to *Testing The Engine Oil Pressure* in this subsection).

### *Oil Sump Cover*

#### *Oil Sump Cover Location*

The oil sump cover is located on the engine bottom.

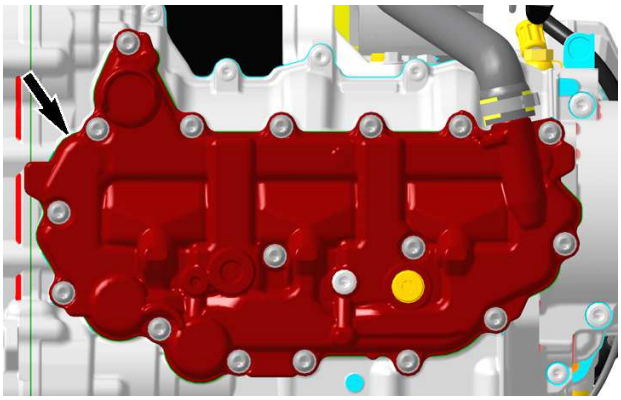

*900 ACE ENGINE SHOWN*

### *Removing the Oil Sump Cover*

1. Remove engine from vehicle. Refer to *Engine Removal and Installation* subsection.
2. Drain engine oil, refer to *Replacing the Engine Oil* in this subsection.

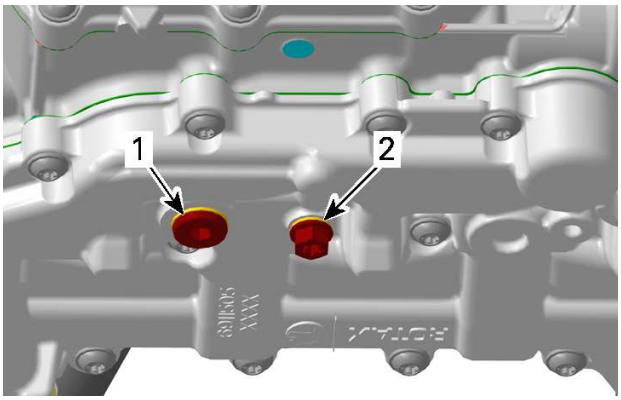


*900 ACE ENGINE SHOWN*
1. *Main drain plug*
2. *Secondary drain plug*

3. ***All models***
4. Unscrew oil sump cover retaining screws.
5. Remove oil sump cover. Discard gasket.
6. Remove and clean engine oil strainers.

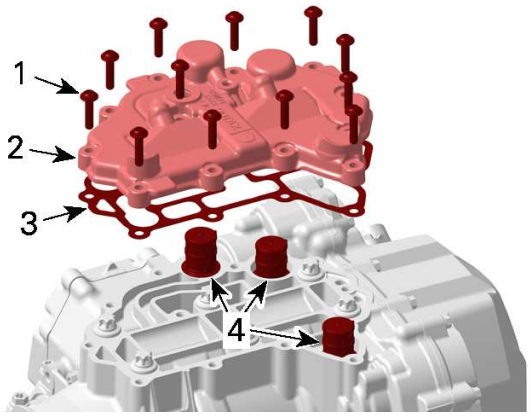


*600 ACE ENGINE*
1. *Retaining screws*
2. *Oil sump cover*
3. *Gasket (discard it)*
4. *Engine oil strainers*

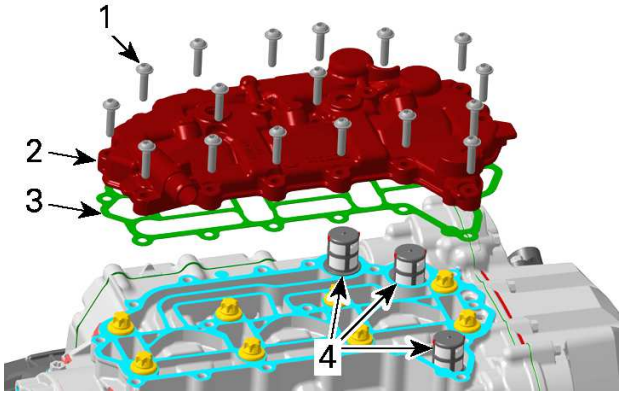


*900 ACE ENGINE*
1. *Retaining screws*
2. *Oil sump cover*
3. *Gasket (discard it)*
4. *Engine oil strainers*

### *Inspecting the Oil Sump Cover*

1. Clean oil sump cover and engine oil strainers with a part cleaner, then use an air gun to dry it.
2. Blow out the oil orifices and check if they are not clogged.

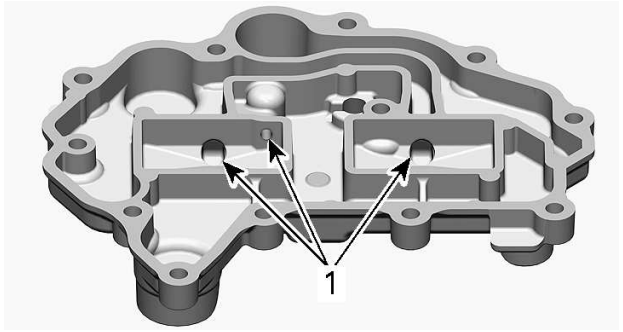


*600 ACE ENGINE*
1. *Oil drain bores*

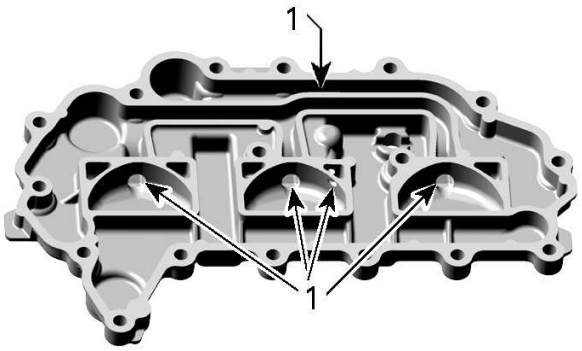


*900 ACE ENGINE*
1. *Oil drain bores*

3. Check oil sump cover for cracks or other damage.
4. Check oil sump cover for flatness with straight edge.
5. Replace oil sump cover if necessary.
6. Check engine oil strainer for damage and change if necessary.

### *Installing the Oil Sump Cover*

1. Install a NEW oil sump cover gasket.
2. Install oil strainers as shown.

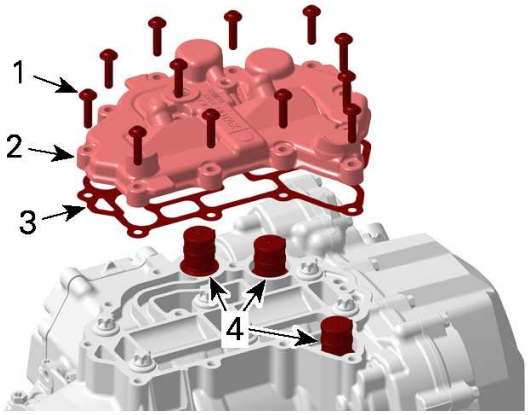


*600 ACE ENGINE*
1. *Retaining screws*
2. *Oil sump cover*
3. *Gasket*
4. *Engine oil strainers*

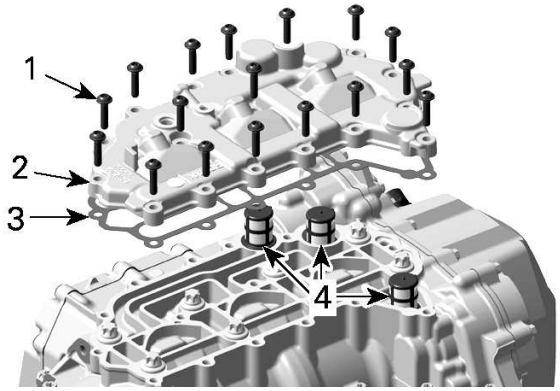


*900 ACE ENGINE*
1. *Retaining screws*
2. *Oil sump cover*
3. *Gasket*
4. *Engine oil strainers*

3. Install oil sump cover on engine, then tighten retaining screws in two steps as follows:
   1. Tighten screws to specification according to the specified sequence.

| Tightening Torque | | |
|---|---|---|
| Oil sump cover screws | Step A | 5 ± 0.6 Nm (44 ± 5 lbf-in) |

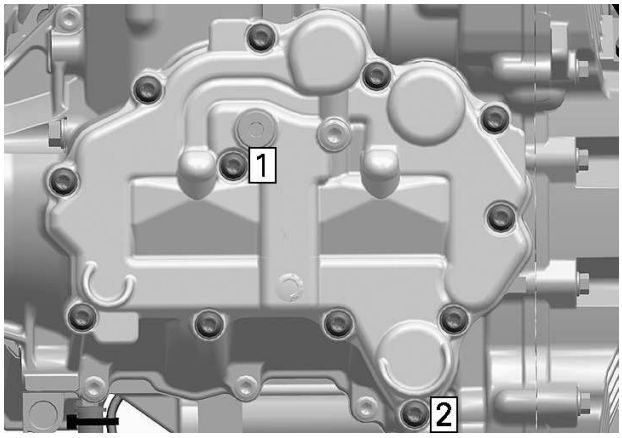


*600 ACE ENGINE - TIGHTENING SEQUENCE STEP A*

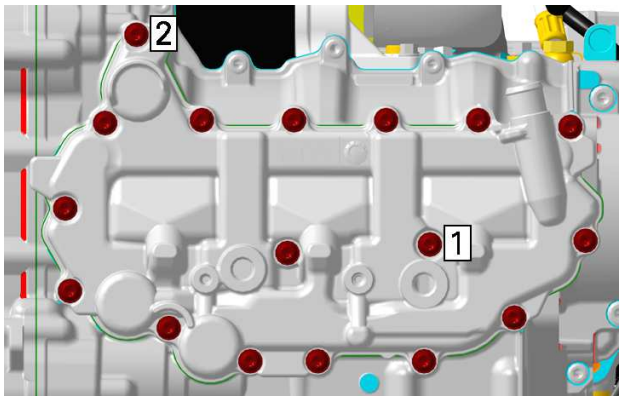


*900 ACE ENGINE - TIGHTENING SEQUENCE STEP A*

2. Tighten screws to specification according the specified sequence.

| Tightening Torque | | |
|---|---|---|
| Reused cylinder block | Step B | 9 ± 1 Nm (80 ± 9 lbf-in) |
| New cylinder block | | 11 ± 1 Nm (97 ± 9 lbf-in) |

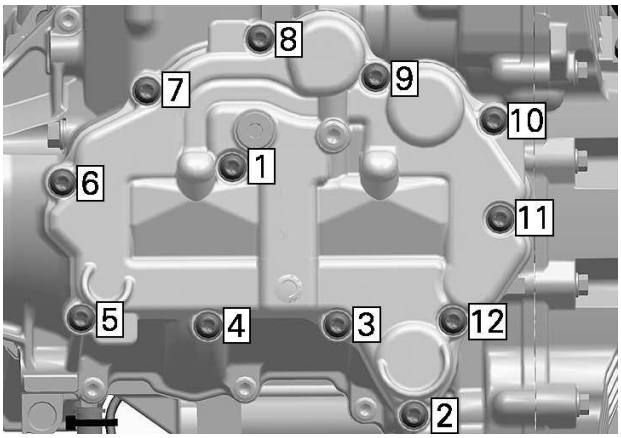


*600 ACE ENGINE - TIGHTENING SEQUENCE STEP B*

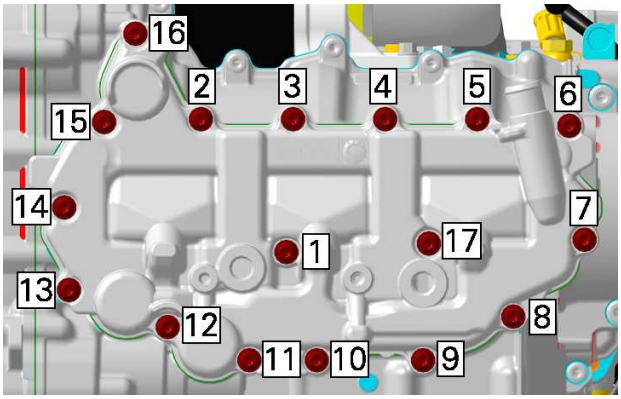


*900 ACE ENGINE - TIGHTENING SEQUENCE STEP B*

4. Reinstall oil drain plugs using NEW sealing washers. Refer to *Replacing the Engine Oil* in this subsection.
5. Install engine in vehicle. Refer to *Engine Removal and Installation* subsection.
6. Fill up oil tank and check oil level. Refer to *Replacing the Engine Oil* in this subsection.

# Lubrication System – GEN2



## SERVICE TOOLS

| Description | Part Number | Page |
|---|---|---|
| ECM ADAPTER TOOL GEN2 | (P/N 529036513) | 78 |
| FLUKE 115 MULTIMETER | (P/N 529035868) | 77–78 |
| OIL PRESSURE HOSE | (P/N 529036394) | 75 |
| OIL PRESSURE TEST CAP | (P/N 529036158) | 75 |
| PRESSURE GAUGE | (P/N 529036395) | 75 |

## SERVICE PRODUCTS

| Description | Part Number | Page |
|---|---|---|
| DOW CORNING 111 | | 79 |

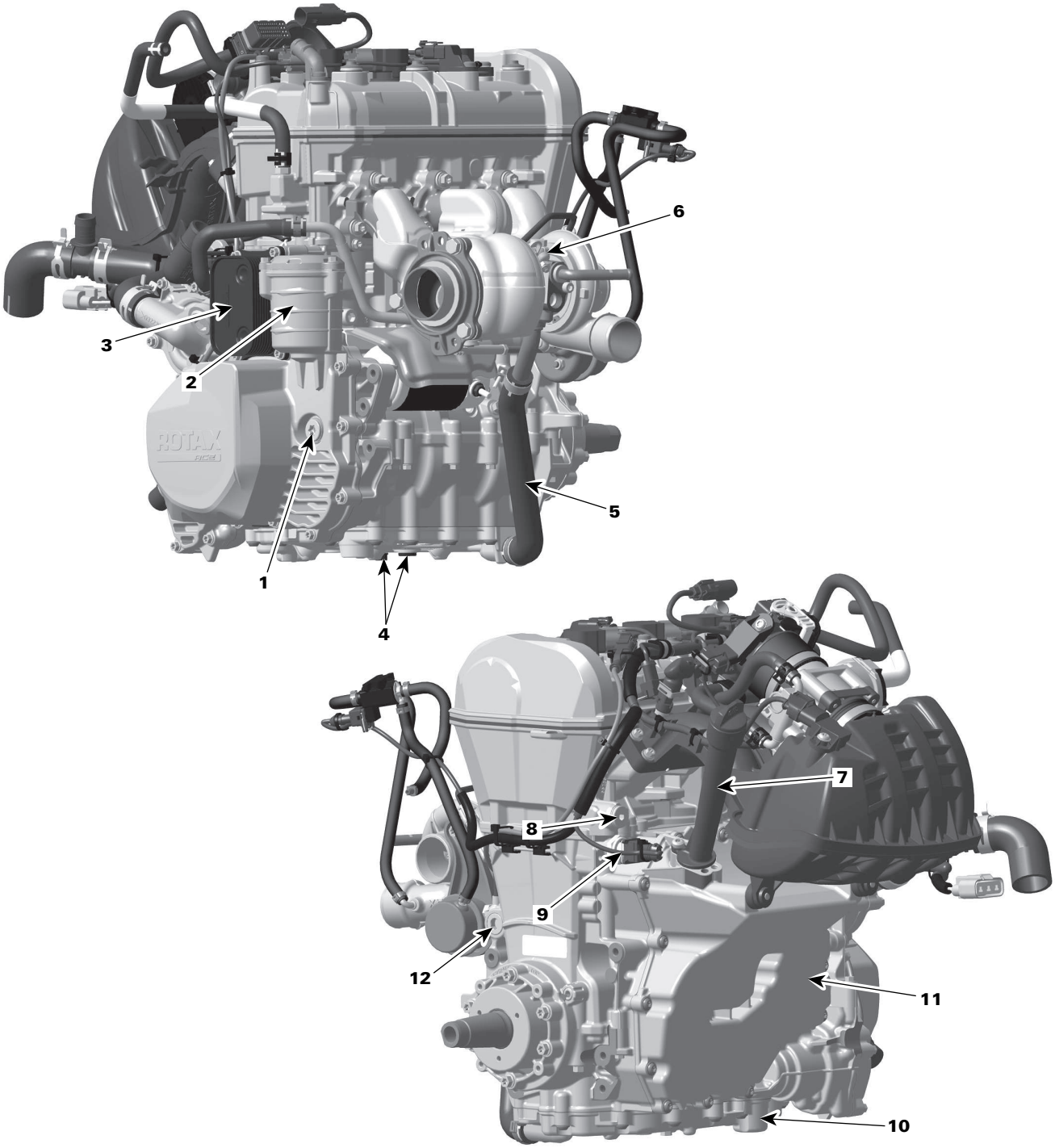


1. *Oil pressure regulator*
2. *Oil filter*
3. *Oil cooler*
4. *Drain plugs*
5. *Oil return hose*
6. *Oil pressure line (connection to turbocharger)*
7. *Oil dip stick*
8. *Chain tensioner*
9. *Oil pressure switch*
10. *Oil strainers*
11. *Oil tank*
12. *Oil pressure line (connection to cylinder block)*

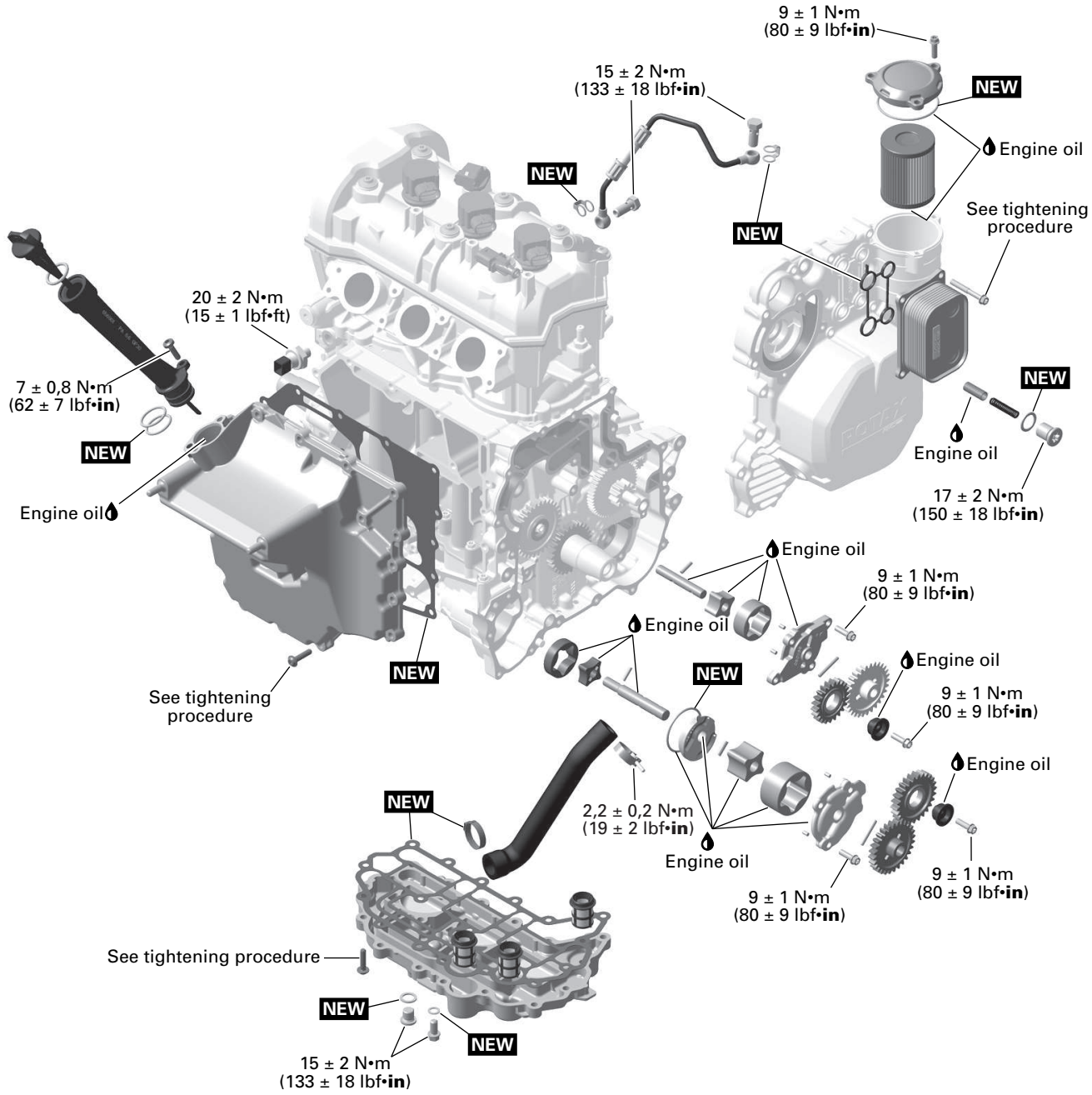


**NEW** = Component must be replaced when removed.

## General

This section refers to the following ECM:

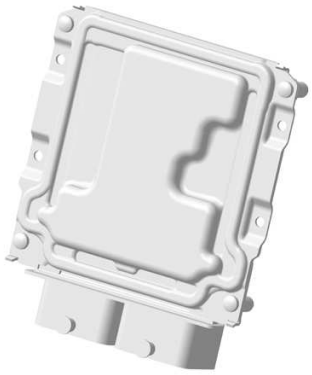

*ECM GEN2 – XCU*

During the assembly or the installation, use the torque values and service products as in the exploded views.

**⚠ WARNING**

**Torque wrench tightening specifications must be strictly adhered to. Locking devices when removed (e.g.: locking tabs, elastic stop nuts, cotter pins, etc.) must be replaced with new ones.**

**NOTICE**

**Hoses, cables or locking ties removed during a procedure must be reinstalled as per factory standards.**

### *System Description*

This engine uses dry sump lubrication. The oil from the cylinder block, timing chain chamber and magneto cover is pumped by two suction pumps.

Both suction pumps are integrated into one module.

The 20 mm (.79 in) large oil suction pump returns the crankshaft and magneto chamber oil to the reservoir.

The 11 mm (.43 in) small oil suction pump returns the timing chain chamber oil to the oil reservoir.

An oil filter and three oil strainers are used to filter dirt and debris from the oil circuit.

The oil strainers are located between oil sump cover and crankcase lower underneath the oil pressure pump.

The oil pressure is provided by a pump and regulated by a spring loaded pressure regulator.

## Maintenance

### *Recommended Engine Oil*

Rotax® engines were developed and validated using the XPS™ oil. BRP recommends the use of its XPS engine oil or an equivalent at all time. Do not add any oil additives to the recommended engine oil. Damages caused by the use of an oil not suitable for the engine or by adding of an oil additives may not be covered by the BRP Limited Warranty.

| XPS™ Recommended Engine Oil |
|---|
| 4T 0W40 Synthetic oil |
| If The Recommended XPS Engine Oil Is Not Available |
| Use a 0W40 4-stroke SAE synthetic engine oil meeting or exceeding the following lubricant industry specifications:<br>– API service classification SM or SN<br>Always check the API service label certification on the oil container, it must contain at least the indicated standard. |

### *Engine Oil Level Verification*

**NOTICE**

**Operating the engine with an improper oil level may cause severe engine damage. Follow this procedure to obtain a precise reading of the engine oil level.**

With the engine at normal operating temperature (90 °C (194 °F) at oil tank surface), place vehicle on a level surface and proceed as follows to check oil level:

1. Start engine and let it idle for at least 30 seconds.
2. Stop engine.
3. Open the LH side panel.
4. Unscrew and remove dipstick and wipe clean.

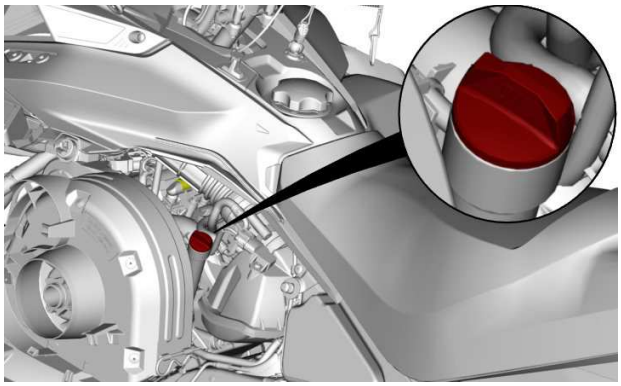

*TYPICAL - LH SIDE OF VEHICLE*

5. Put the dipstick back in the filler tube and fully tighten it
6. Remove dipstick again and check oil level. It should be near or equal to the MAX mark.




*TYPICAL*
1. *MIN*
2. *MAX*
3. *Operating range*

7. To add oil, place a funnel into the filler tube to avoid spillage.

**NOTE:** The oil quantity between MIN. and MAX. mark is approximately 500 ml (16.9 fl oz(US)).

   1. Add a small amount of oil and recheck oil level.
   2. Repeat the operation until oil level reaches the dipstick's MAX mark. Do not overfill.
8. Reinstall dipstick and properly tighten it.
9. Wipe off any oil spillage.
10. Close the LH side panel.

### *Replacing the Engine Oil*

**⚠ CAUTION**

**The engine oil can be very hot. Wait until engine oil is warm.**

**NOTICE**

**Engine oil and oil filter must be replaced at the same time.**

1. Bring engine to its normal operating temperature (90 °C (194 °F) at oil tank surface).
2. Place vehicle on a level surface.
3. Remove the LH side panel.
4. Remove dipstick.

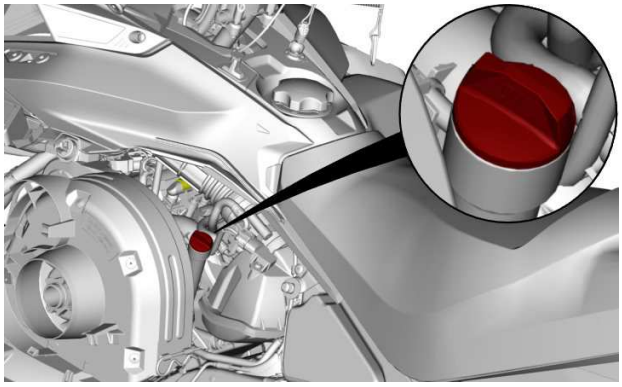

*TYPICAL - LH SIDE OF VEHICLE*

5. Remove oil filter. Refer to *Replacing the Engine Oil Filter* in this subsection.
6. From underneath the vehicle, access the drain plug:

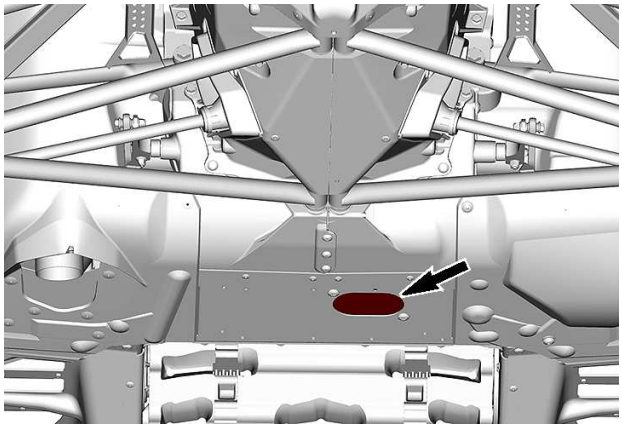

*DRAIN PLUGS ACCESS COVER*

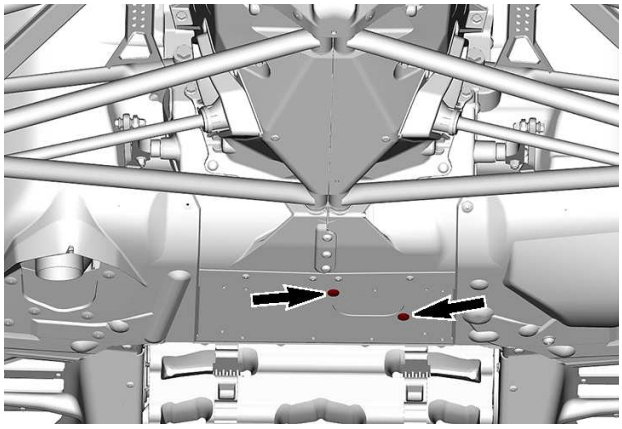

*ACCESS COVER SCREWS*

   1. Remove one access cover retaining screw and loosen the other.
   2. Pivot the access cover to clear the bottom pan opening.
7. Clean drain plug area.

8. Place a drain pan under the bottom pan opening.
9. Remove engine drain plugs in the following order.

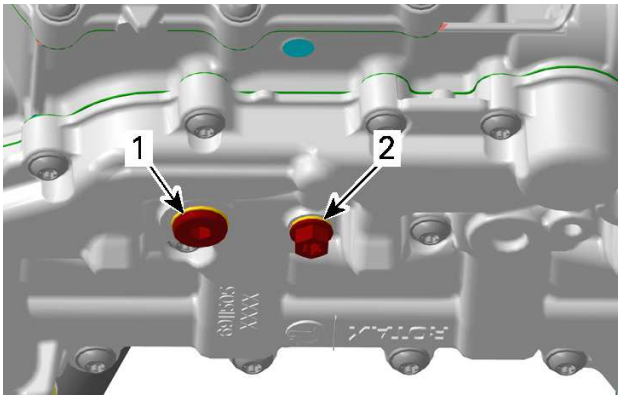


*1. Main drain plug*
*2. Secondary drain plug*

   1. Main drain plug.
   2. Secondary drain plug.

10. Allow oil to drain completely.
11. Install **NEW** sealing washers on oil drain plugs.

**NOTICE**

**Never use a sealing washer a second time. Always replace with a new one.**

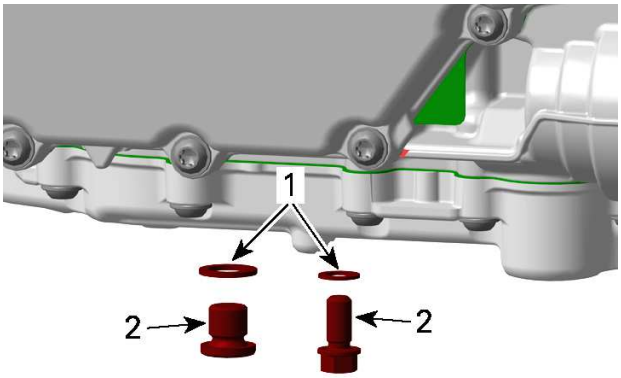


*1. Sealing washers*
*2. Oil drain plugs*

12. Install drain plugs and tighten to the specified torque.

| Tightening Torque | |
|---|---|
| Drain plugs | 15 ± 2 Nm<br>(133 ± 18 lbf-in) |

13. Replace oil filter. Refer to *Replacing the Engine Oil Filter* in this subsection.
14. Refill oil tank at the proper level with the recommended oil.

| Approximate Engine Oil Capacity (with Filter) |
|---|
| 3.3 l<br>(3.49 qt (liq.,US)) |

15. Reinstall dipstick in oil tank and properly tighten it.
16. Start engine and let it idle for a few minutes.
17. Ensure there are no leaks.
18. Stop engine and check oil level as explained in this subsection. Refill if necessary.
19. Dispose oil and filter as per your local environmental regulations.

### *Replacing the Engine Oil Filter*

#### *Removing the Oil Filter*

1. Remove the RH side panel.
2. Remove the muffler. Refer to *exhaust system* subsection.
3. Clean oil filter area.
4. Remove:

   – Oil filter cover screws
   – Oil filter cover with O-ring (discard it)
   – Oil filter.

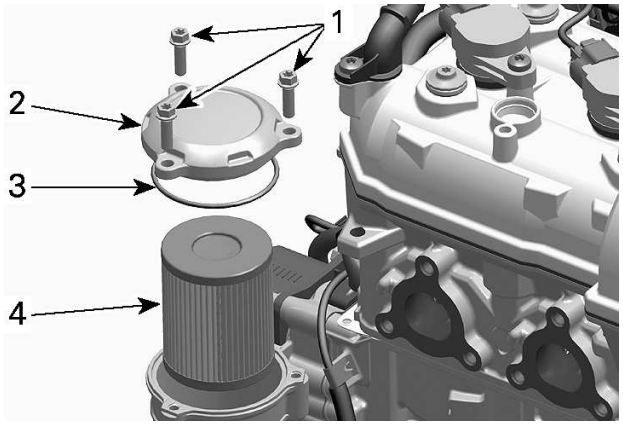


***TYPICAL***
*1. Oil filter cover screws*
*2. Oil filter cover*
*3. O-ring (discard it)*
*4. Oil filter*

5. Dispose filter as per your local environmental regulations.

#### *Installing the Oil Filter*

1. Check the oil filter inlet and outlet orifices inside oil filter housing (integrated in magneto cover) for dirt and contaminations.

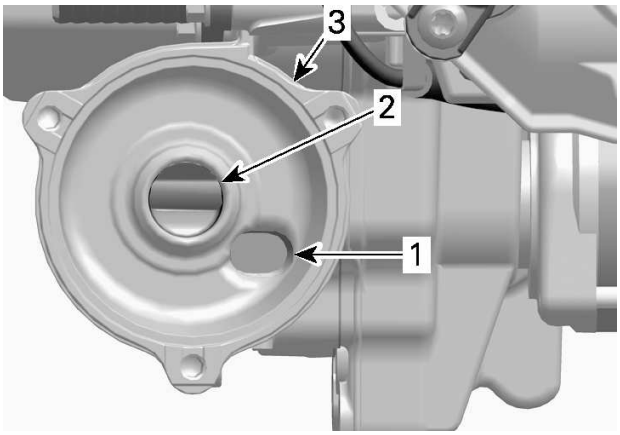


1. *Oil inlet orifice from the oil pressure pump*
2. *Oil outlet orifice to the engine lubrication system*
3. *Oil filter housing*

2. Install a **NEW** O-ring on oil filter cover.
3. Lubricate filter seal and cover O-ring with engine oil.




1. *Lubricate with engine oil*

4. Install the oil filter cover.
5. Tighten oil filter cover screws to the specified torque.

| Tightening Torque | |
|---|---|
| Oil filter cover screws | 9 ± 1 Nm<br>(80 ± 9 lbf-in) |

## Inspection

### *Testing the Engine Oil Pressure*

1. Remove the oil filter cover.
2. Completely tighten adapter hose on oil pressure test cap.

| | |
|---|---|
| **Oil pressure hose (P/N 529036394)** |  |
| **Oil pressure test cap (P/N 529036158)** |  |

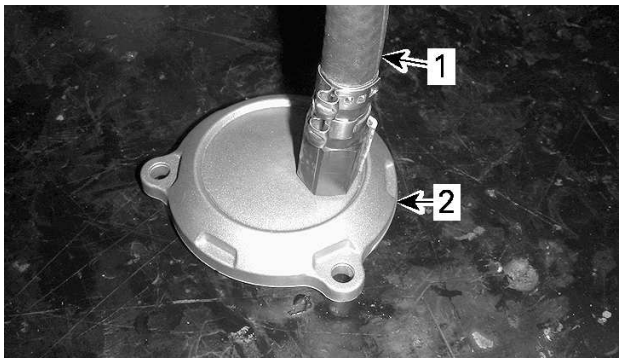


1. *Adapter hose*
2. *Oil pressure test cap*

3. Install oil pressure test cap on oil filter housing. Position adapter hose near engine.

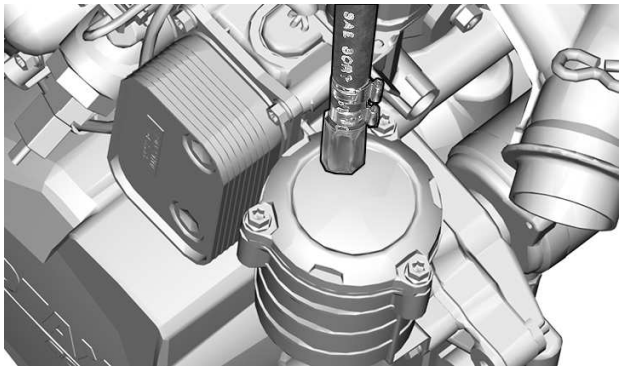

4. Connect pressure gauge to the oil pressure hose.

| | |
|---|---|
| **Pressure gauge (P/N 529036395)** |  |

5. Start engine and check oil pressure.

| Engine Oil Pressure @ 100 °C (212 °F) Engine Oil Temperature | |
|---|---|
| **Engine Speed** | **Minimum Pressure** |
| Idle | 100 kPa<br>(14.5 lbf/in²) |
| 4000 RPM | 300 kPa<br>(43.51 lbf/in²) |
| 6000 to 8000 RPM | 400 kPa<br>(58.02 lbf/in²) |

If the engine oil pressure is out of specification, refer to *Troubleshooting* in this subsection.

6. Remove engine oil pressure test tools.

7. Install oil filter cover. Refer to *Replacing the Engine Oil Filter* in this subsection.
8. Install all other removed parts.

## Troubleshooting

Always check for fault codes. If a fault code is detected, service the fault code first.

### *Troubleshooting*

**1. Low or No Engine Oil Pressure**

Oil level is too low.

– *Refill engine oil.*

– *Check for high oil consumption. See below.*

– *Check for oil leaks (oil leaking out of leak indicator hole, gaskets, oil seal or O-rings). Repair or replace.*

Defective or clogged oil filter

– *Replace engine oil and filter.*

Use of a bad grade oil

– *Replace engine oil with BRP recommended oil.*

Oil pressure regulator valve sticks open, or spring load is insufficient.

– *Clean oil regulator piston and its bore. Replace if necessary.*

– *Measure spring free length. Replace if out of specification.*

Defective oil pressure switch, oil pressure warning light does not disappear.

– *Test the OPS, see procedure in this subsection.*

Oil pump(s) worn or damaged.

– *Check if oil pump drive gears are damaged. Replace if necessary.*

– *Check oil pump rotors and its bore for wear limits. Replace if out of specification.*

Engine oil strainer is clogged.

– *Remove and clean engine oil strainer.*

Heavy wear on plain bearings.

– *Check radial clearance of plain bearings. Replace if out of specification.*

### *Troubleshooting*

**1. High Oil Consumption**

Oil in breathing system.

– *Check if breather V-ring is brittle, hard or damaged. Replace V-ring.*

– *Check if oil separator cover is damaged or missing.*

Valve stem seals worn or damaged.

– *Replace valve stem seals.*

Piston rings worn out (blue colored exhaust smoke).

– *Replace piston rings.*

### *Troubleshooting*

**1. Oil Contamination (White Appearance)**

Oil cooler gasket leaking.

– *Replace gasket. Change engine oil.*

Cylinder head screws not properly tightened.

– *Retighten screws with recommended torque. Change engine oil.*

Cylinder head gasket leaking.

– *Replace cylinder head gasket. Change engine oil.*

Damaged engine parts (e.g. cylinder head, cylinder block,..).

– *Check damages or cracks on engine parts. Replace defective part. Change engine oil.*

Oil seal and rotary seal on water pump shaft leaking.

– *Replace oil seal, rotary seal and water pump shaft. Change engine oil.*

## Procedures

### *Oil Pressure Switch (OPS)*

### *OPS Activation*

The oil pressure switch activates when the engine oil pressure is lower than following specified pressure range.

| OPS Activation Range |
|---|
| 20 to 50 kPa<br>(2.9 to 7.3 lbf/in²) |

**NOTE:** ECM does not trigger the OPS signal below 2500 rpm.

### *OPS Location*

The OPS is located on the rear left side of the engine, underneath the chain tensioner plug screw.

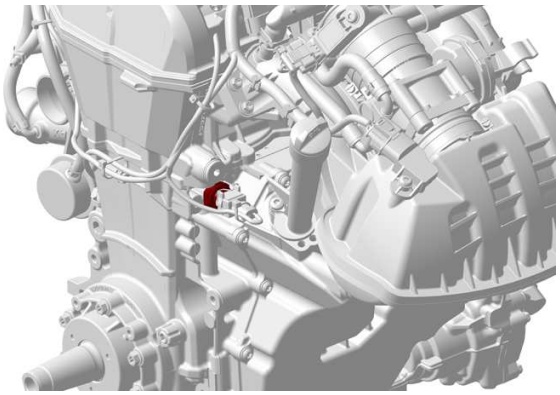

### *Inspecting the OPS*

1. Perform *Engine Oil Pressure Test* to confirm oil pressure is adequate.
2. Check the oil pressure switch. Perform *Testing the OPS Resistance* and *Testing the OPS Circuit Continuity*.

### *Testing the OPS Resistance*

The engine must be warm to check the oil pressure switch properly.

**⚠ WARNING**

**Be careful when working near hot parts. Always wear long sleeves and gloves.**

1. Remove the driven pulley.
2. Cut locking tie and disconnect OPS connector.

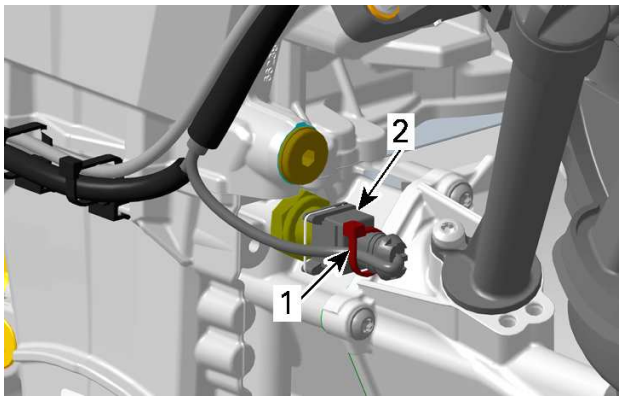


***900 ACE TURBO ENGINE***
*1. Locking tie*
*2. OPS connector*

3. Check oil pressure switch resistance as per the following table.

| **Fluke 115 multimeter (P/N 529035868)** |  |
|---|---|

| OPS Resistance Test (Engine Not Running) | | |
|---|---|---|
| **OPS Pin** | **Ground** | **Specification** |
| 1 | Engine ground | Close to 0 Ω (normally closed switch) |

4. If resistance is out of specification, replace the oil pressure switch.
5. If the resistance is correct, continue procedure.
6. Install the pulley guard.
7. Start the engine.
8. Check oil pressure switch resistance as per the following table.

| OPS Resistance Test (Engine Running) | | |
|---|---|---|
| **OPS Pin** | **Ground** | **Specification** |
| 1 | Engine ground | Infinitely high (OL) |

9. If resistance is out of specification, replace the oil pressure switch.
10. If the resistance is correct, check the oil pressure switch circuit continuity.

### *Testing the OPS Circuit Continuity*

1. Disconnect the ECM-13 connector. Refer to *Electronic Control Module (ECM) - GEN2* subsection.
2. Install the ECM-13 connector on the ECM adapter tool.

| ECM adapter tool GEN2 (P/N 529036513) |  |
|---|---|

3. Cut locking tie and disconnect the OPS connector. Refer to *Testing the OPS Resistance* in this subsection.
4. Check continuity as follows.

| Fluke 115 multimeter (P/N 529035868) |  |
|---|---|

| OPS Circuit Continuity Test | | |
|---|---|---|
| **OPS Pin** | **ECM Adapter Pin** | **Specification** |
| 1 | 9 | Close to 0 Ω |

5. If the continuity is good and all other tests are performed, try a **NEW** ECM.
6. If the continuity is bad, repair or replace defective wire or connectors.

### *Removing the OPS*

1. Remove the driven pulley.
2. Cut locking tie and disconnect OPS connector.

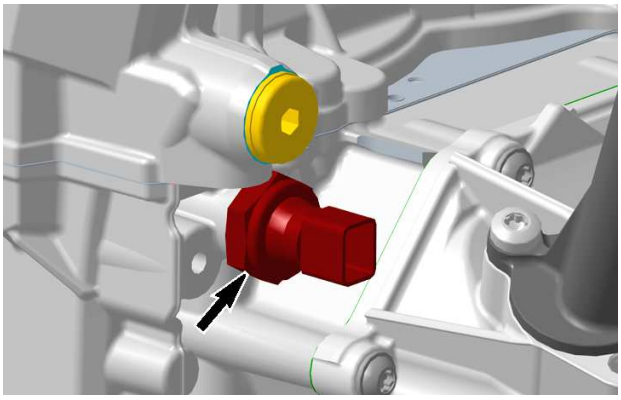

### *Installing the OPS*

1. Install the oil pressure switch and tighten to specification.

| Tightening Torque | |
|---|---|
| Oil pressure switch | 20 ± 2 Nm (15 ± 1 lbf-ft) |

2. Install all other removed parts.

**NOTICE**

**When installing the locking tie on the OPS connector, avoid making a sharp bend in the wires.**

## *Oil Filler Tube*

### *Oil Filler Tube Location*

The oil filler tube is located on the rear left side of the engine, on the oil tank.

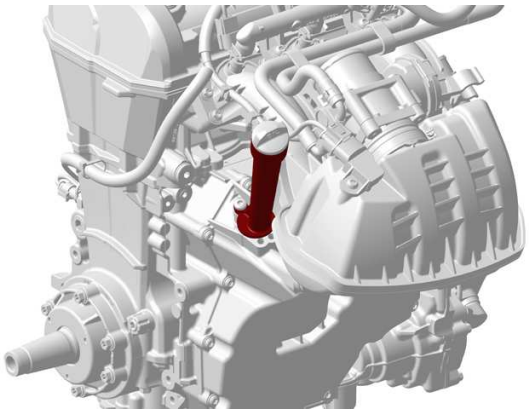

*TYPICAL*

### *Removing the Oil Filler Tube*

1. Remove oil filler tube retaining screw.

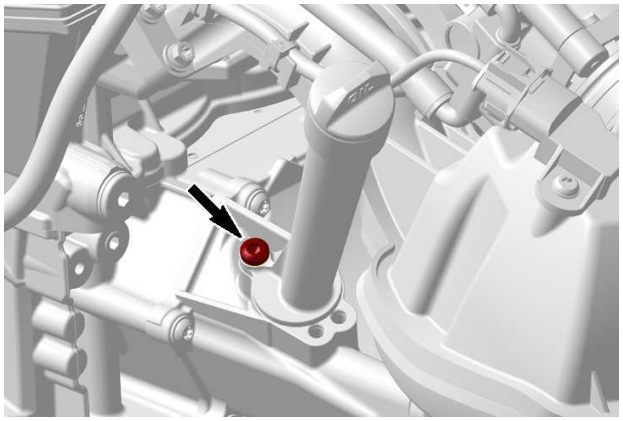

*TYPICAL*

2. Pull filler tube out of oil tank cover.
3. Remove O-rings and discard them.

### *Installing the Oil Filler Tube*

1. Install **NEW** O-rings on oil filler tube.

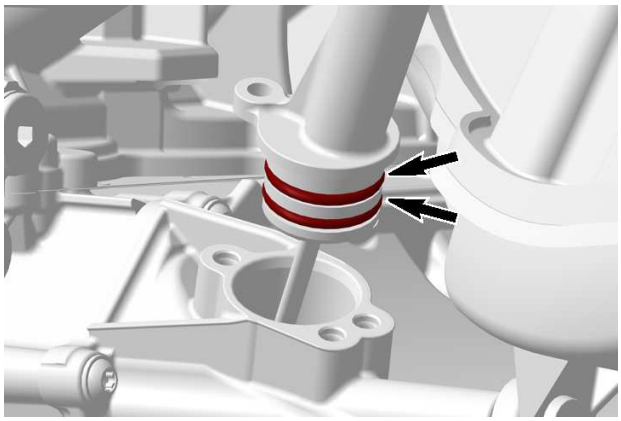

2. Lubricate O-rings.

| Dow Corning 111 |
|---|

3. Install oil filler tube.
4. Tighten retaining screw to specification.

| Tightening Torque | |
|---|---|
| Oil filler tube retaining screw | 7 ± 0.8 Nm (62 ± 7 lbf-in) |

5. Install all other removed parts.

### *Oil Tank*

#### *Removing the Oil Tank Cover*

1. Drain engine oil. Refer to *Replacing the Engine Oil* in this subsection.
2. Remove engine from vehicle. Refer to *Engine Removal and Installation* subsection.
3. Remove intake manifold. Refer to *Intake Manifold - GEN2* subsection.
4. Place a drain pan underneath oil tank.
5. Unscrew oil tank cover retaining screws.

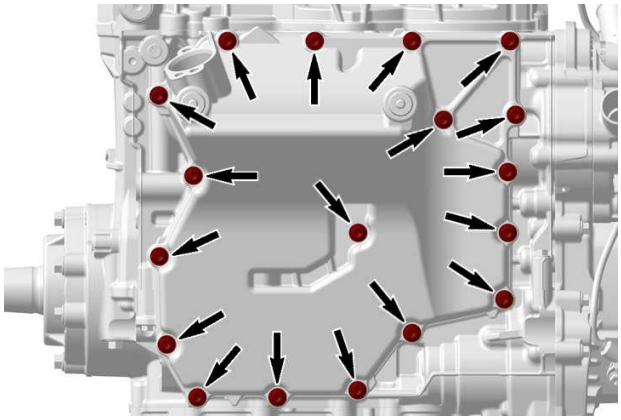

6. Remove oil tank from the engine and discard gasket.

#### *Installing the Oil Tank Cover*

1. Install **NEW** gasket.
2. Install oil tank on engine, then tighten screws in two steps as follows:
   1. Tighten screws to the following specified torque using the specified sequence.

| Tightening Torque | | |
|---|---|---|
| Oil tank screws | Step A | 5 ± 0.6 Nm (44 ± 5 lbf-in) |

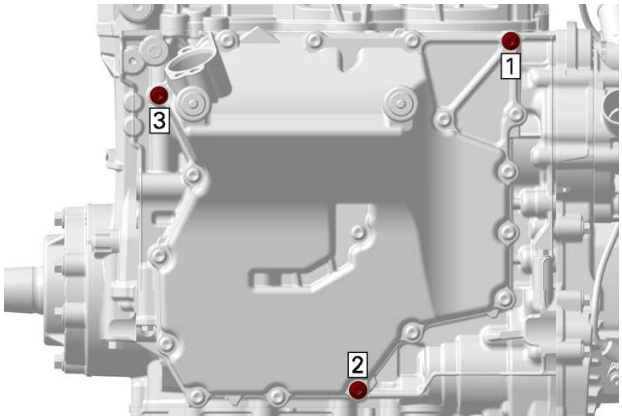


*TIGHTENING SEQUENCE STEP A*

   2. Tighten screws to the following specified torque using the specified sequence.

| Tightening Torque | | |
|---|---|---|
| Reused cylinder block | Step B | 9 ± 1 Nm (80 ± 9 lbf-in) |
| New cylinder block | | 11 ± 1 Nm (97 ± 9 lbf-in) |

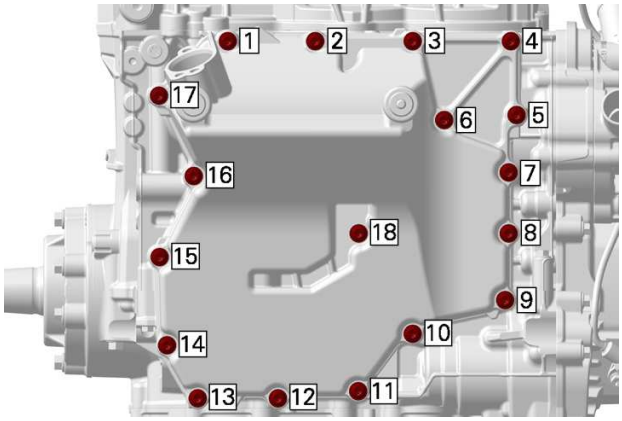


*TIGHTENING SEQUENCE STEP B*

3. Wipe up any oil spillage.
4. Install intake manifold. Refer to *Intake Manifold - GEN2* subsection.

5. Install engine in vehicle. Refer to *Engine Removal and Installation* subsection.
6. Fill up oil tank and check oil level. Refer to *Replacing the Engine Oil* in this subsection.

### *Oil Cooler*

#### *Oil Cooler Location*

The oil cooler is located on the right side of the engine, beside the oil filter.

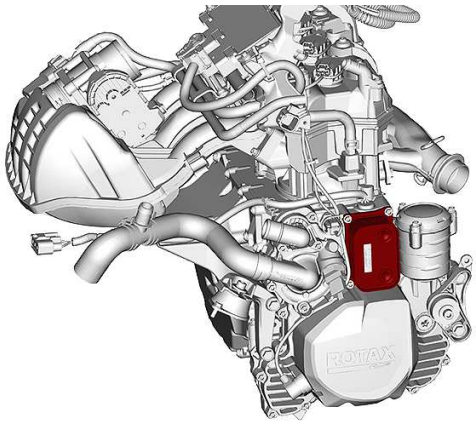

*TYPICAL*

#### *Removing the Oil Cooler*

1. Drain engine oil. Refer to *Replacing the Engine Oil* in this subsection.
2. Drain cooling system. Refer to *Cooling System - GEN2* subsection.
3. Remove oil cooler retaining screws.

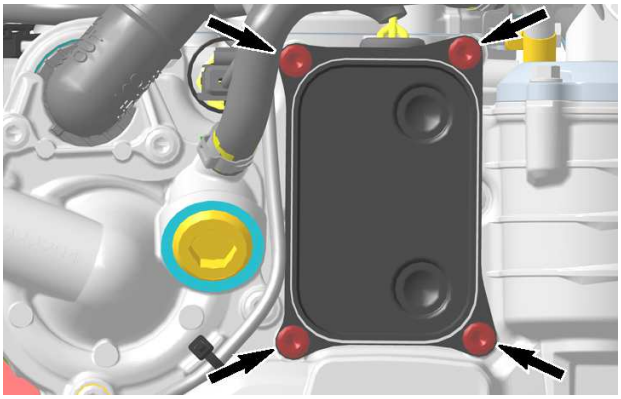

4. Place rags or towels under oil cooler to catch remaining oil and coolant.
5. Remove oil cooler and discard gasket.

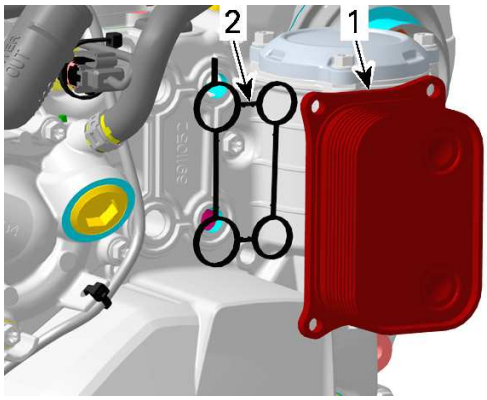


1. *Oil cooler*
2. *Gasket (discard it)*

#### *Inspecting the Oil Cooler*

Check oil cooler for cracks and other damage.

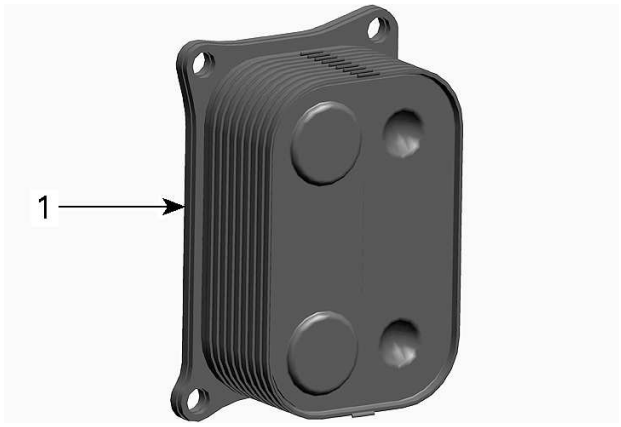


1. *Check for cracks*

Replace parts as necessary.

#### *Installing the Oil Cooler*

The installation is the reverse of the removal procedure. However, pay attention to the following:

1. Install **NEW** oil cooler gasket.
2. Tighten oil cooler screws in two steps to the specified torques using the illustrated sequence.

| Tightening Torque | | |
|---|---|---|
| Oil cooler screws | Step A | 5 ± 0.6 Nm (44 ± 5 lbf-in) |

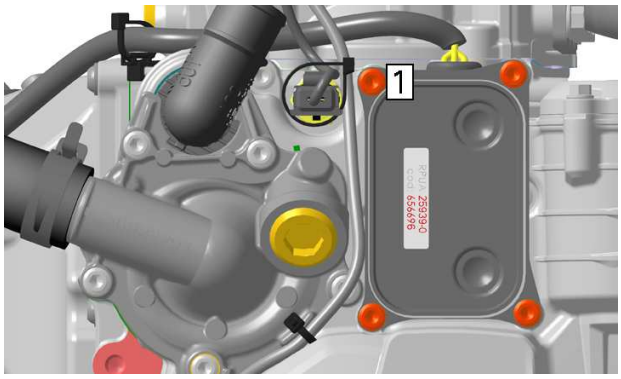


*TIGHTENING SEQUENCE STEP A*

| Tightening Torque | | |
|---|---|---|
| Oil cooler screws | Step B | 9 ± 1 Nm (80 ± 9 lbf-in) |

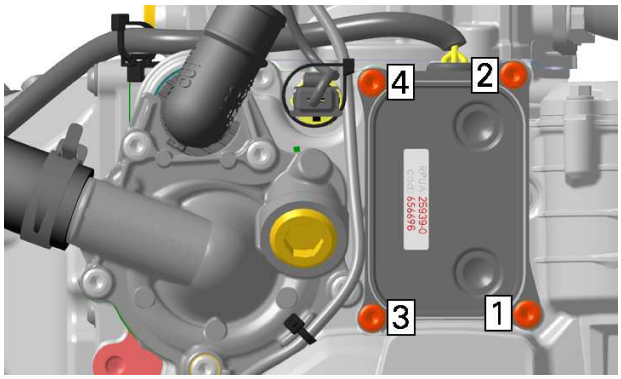


*TIGHTENING SEQUENCE STEP B*

3. Wipe up any oil and coolant spillage.
4. Fill up oil tank and check oil level. Refer to *Replacing the Engine Oil* in this subsection.
5. Refill and bleed cooling system. Refer to *Cooling System - GEN2* subsection.

### *Engine Oil Pressure Regulator*

#### *Oil Pressure Regulator Location*

The engine oil pressure regulator is located inside the magneto cover.

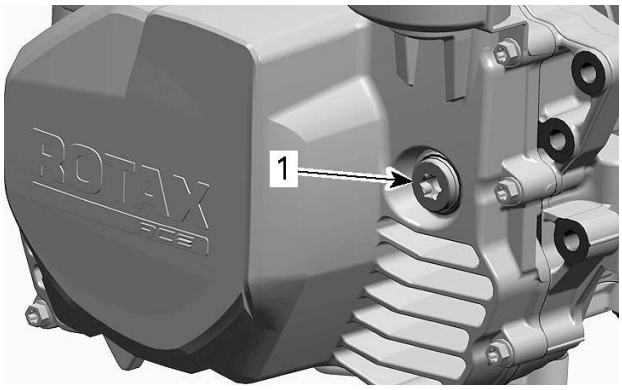


1. *Engine oil pressure regulator*

#### *Removing the Oil Pressure Regulator*

1. Remove muffler, refer to *Exhaust System* subsection.
2. Drain engine oil. Refer to *Replacing the Engine Oil* in this subsection.
3. Remove:
   - Regulator plug
   - Sealing washer (discard it).
4. Pull oil pressure regulator parts out of the magneto cover.

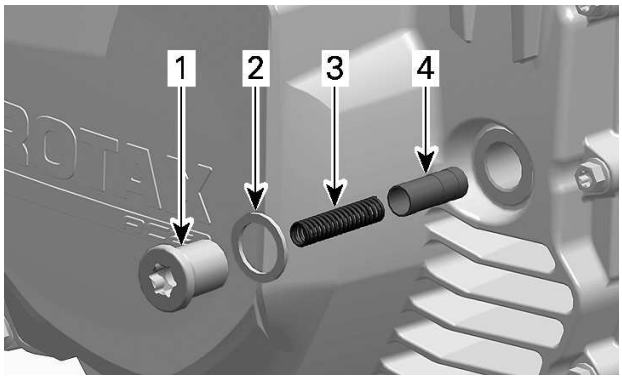


1. *Plug*
2. *Sealing washer (discard it)*
3. *Regulator spring*
4. *Regulator piston*

#### *Inspecting the Oil Pressure Regulator*

1. Clean bore and thread in the magneto cover of any contamination.
2. Inspect oil pressure regulator piston and bore in cylinder block for scoring or other damages.
3. Check if piston moves easily in its bore.
4. Check compression spring for free length.

| Spring Free Length | |
|---|---|
| New nominal | 46 mm (1.811 in) |
| Service limit | 45 mm (1.772 in) |

5. Visually check compression spring for squareness.
6. Replace worn or damaged components.

### *Installing the Oil Pressure Regulator*

The installation is the reverse of the removal procedure. However, pay attention to the following:

1. Apply engine oil on regulator piston.
2. Install a **NEW** sealing washer on plug.
3. Tighten regulator plug to the specified torque.

| Tightening Torque | |
|---|---|
| Oil pressure regulator plug | 17 ± 2 Nm (150 ± 18 lbf-in) |

4. Wipe up any oil spillage.
5. Fill up oil tank and check oil level. Refer to *Replacing the Engine Oil* in this subsection.
6. Install all other removed parts. Refer to applicable subsections.

### *Oil Pump Drive Gears*

### *Oil Pump Drive Gear Location*

The oil pump gears are located on the MAG side, behind the magneto cover.

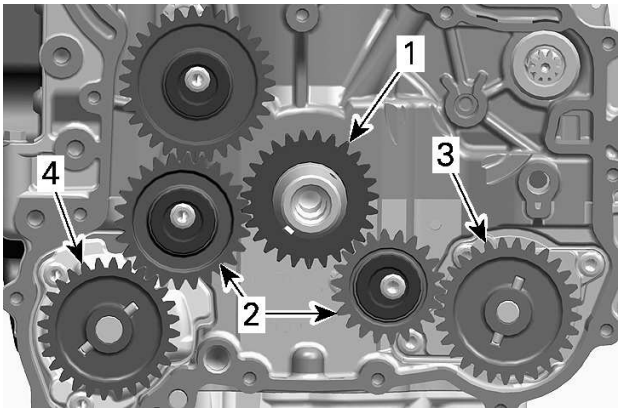


*1. Oil pump drive gear*
*2. Intermediate gears*
*3. Oil pressure pump gear*
*4. Oil suction pump gear*

### *Removing the Oil Pump Drive Gear*

1. Refer to *Magneto and Starter - GEN2* subsection to remove:
   - Magneto cover
   - Rotor
   - Sprag clutch gear.
2. Unscrew oil pump intermediate gear screws.

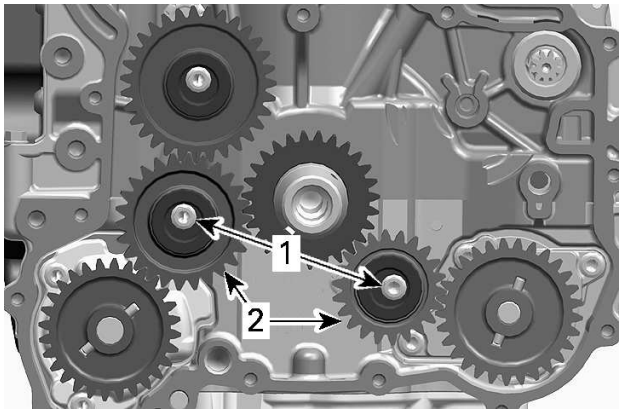


*1. Retaining screws*
*2. Intermediate gears*

3. Remove bearing sleeves and oil pump intermediate gears.

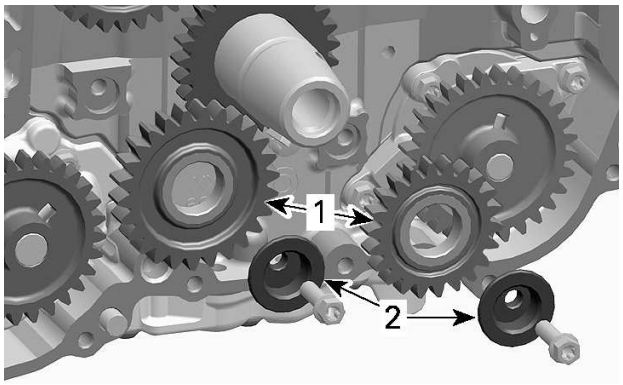


*1. Intermediate gears*
*2. Bearing Sleeves*

4. Remove oil pump gears and needle pins.

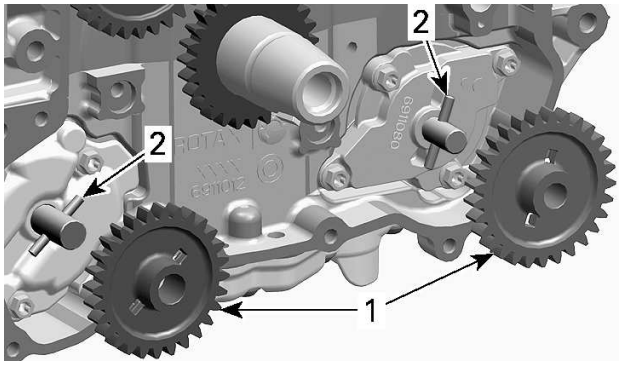


*1. Oil pump gears*
*2. Needle pins*

### *Inspecting the Oil Pump Drive Gear*

Inspect gears for wear, cracks or other damage.

Replace if damaged.

### *Installing the Oil Pump Drive Gear*

The installation is the reverse of the removal procedure. However, pay attention to the following.

1. Be sure to not intermix oil pump gears, see next illustration.

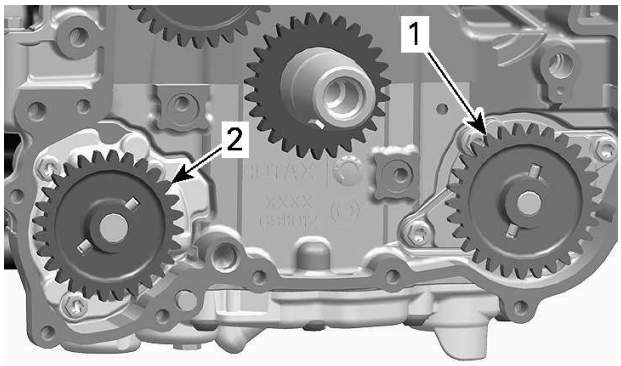


*1. 29 teeth oil pump gear (BROWN)*
*2. 28 teeth oil pump gear (BLACK)*

   1. Install the 29 teeth oil pump gear (BROWN) on oil pressure pump.
   2. Install the 28 teeth oil pump gear (BLACK) on oil suction pump.
2. Lubricate intermediate gears bearing sleeves with engine oil, then install gears and tighten screws to specified torque.

| Tightening Torque | |
|---|---|
| Intermediate gear screws | 9 ± 1 Nm (80 ± 9 lbf-in) |

3. Install all other removed parts.
4. Fill up oil tank and check oil level. Refer to *Replacing the Engine Oil* in this subsection.

### *Oil Pressure Pump*

### *Oil Pressure Pump Location*

The oil pressure pump is located in the cylinder block, behind the magneto cover.

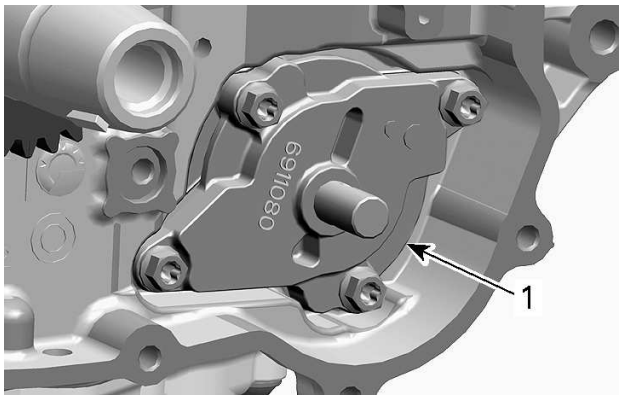


*1. Oil pressure pump*

### *Removing the Oil Pressure Pump*

1. Remove *Oil Pump Drive Gears*, see procedure in this subsection.
2. Remove oil pump cover.

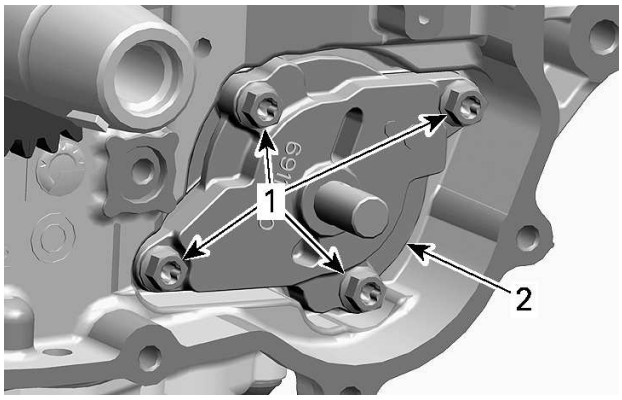


*1. Retaining screws*
*2. Oil pump cover*

3. Remove following parts.

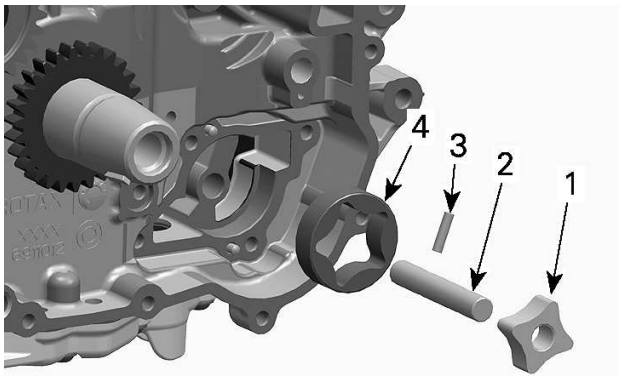


*1. Inner rotor*
*2. Oil pump shaft*
*3. Needle pin*
*4. Outer rotor*

### *Inspecting the Oil Pressure Pump*

1. Inspect oil pump and oil pump cover bore for marks, scratches or other damage. Replace any damaged parts.

2. Check oil pump cover for damages and for surface straightness with a straight edge.
3. Check inner rotor for corrosion, worn pin slots or other damages. If so, replace inner and outer rotor at the same time.

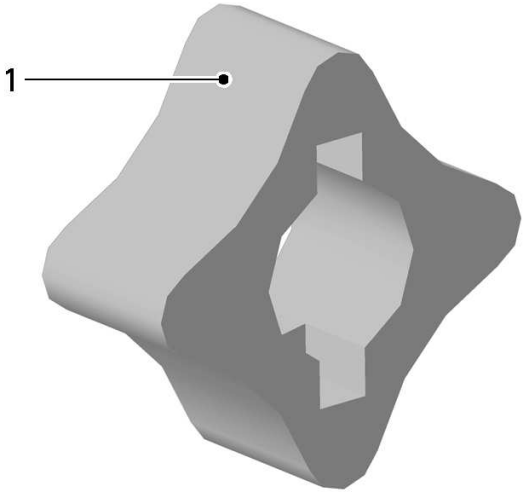


*1. Pitting on the teeth*

### *Radial Clearance*

1. Using a feeler gauge, measure the clearance of outer rotor and inner rotor as indicated by the arrows.

| **Feeler gauge** | |
|---|---|

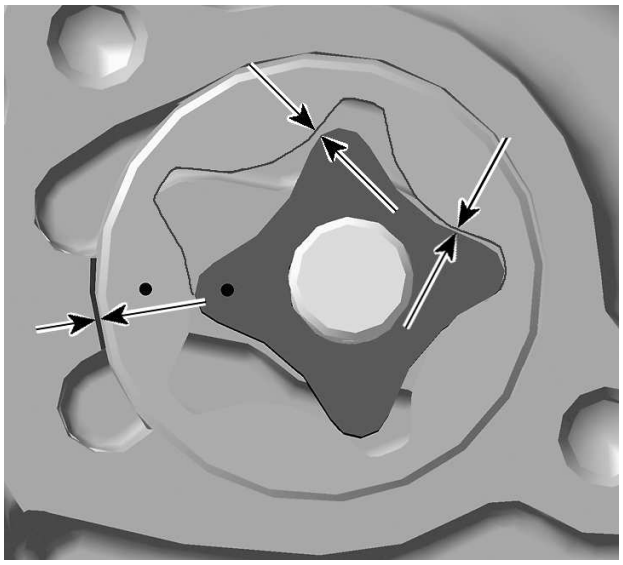

| **Oil Pump Radial Clearance** | |
|---|---|
| Service limit | 0.25 mm (.0098 in) |

**NOTE:** If clearance of inner and outer rotors exceeds the tolerance, replace oil pump.

### *Axial Clearance*

1. Measure outer rotor thickness with a micrometer.

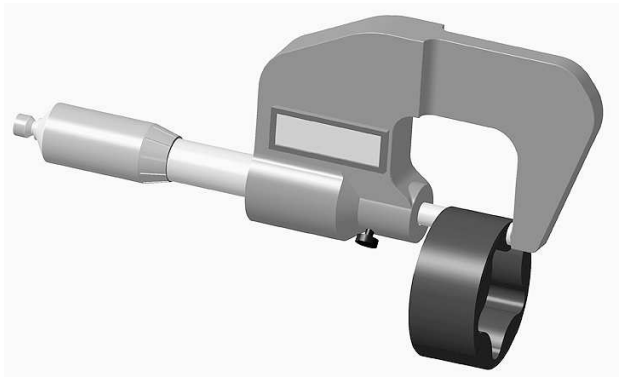

***OUTER ROTOR THICKNESS***

2. Using a depth gauge, measure the depth of oil pump bore in the lower crankcase.

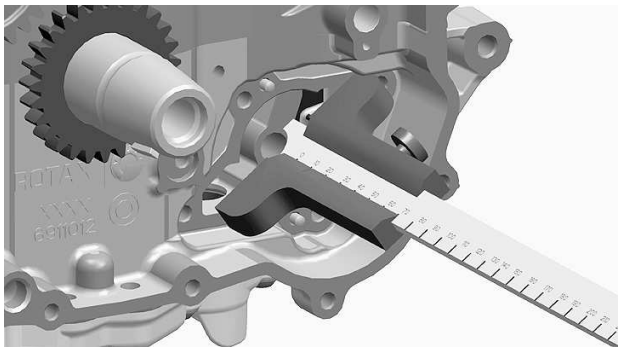

*OIL PUMP BORE DEPTH (OIL PUMP COVER)*

3. Substract bore depth from rotor thickness to obtain axial clearance.

| Oil Pump Axial Clearance | |
|---|---|
| Service limit | 0.15 mm (.0059 in) |

**NOTE:** When the axial clearance of the oil pump assembly increases, the oil pressure decreases.

### *Installing the Oil Pressure Pump*

The installation is the reverse of the removal procedure. However, pay attention to the following.

1. Lubricate outer rotor with engine oil.

**NOTICE**

**Install rotors with the marks outwards.**

2. Install outer rotor in crankcase oil pump bore.

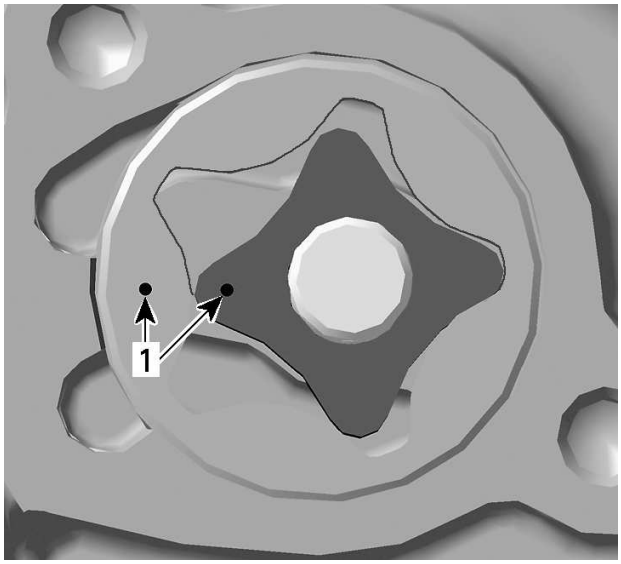


*TYPICAL*
*1. Marks on inner and outer rotor*

3. Install needle pin in oil pump shaft.

**NOTICE**

**The oil pump shaft is not symmetrical, the longer side must be installed inward.**

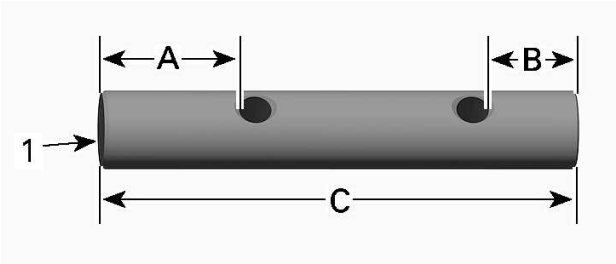


*A. 21.93 mm (.86 in)*
*B. 11.43 mm (.45 in)*
*C. 65 mm (2.56 in)*
*1. Towards engine*

4. Place inner rotor on the oil pump shaft. Lubricate oil pump shaft and inner rotor with engine oil.
5. Install oil pump assembly in the crankcase.

**NOTE:** Check if both needle pins are pressed into the crankcase.

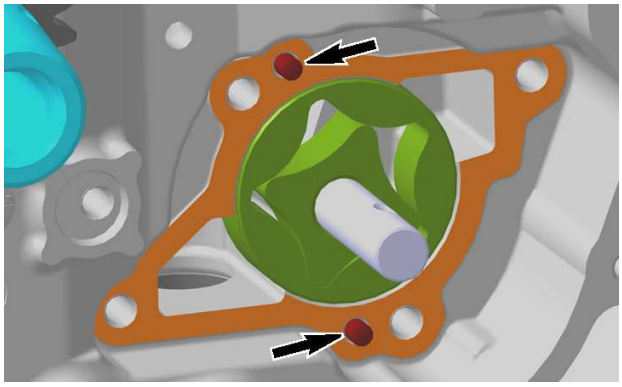

*NEEDLE PINS*

6. Install oil pump cover and tighten retaining screws to the following specified torque using the specified sequence.

| Tightening Torque | |
|---|---|
| Oil pump cover screws | 9 ± 1 Nm (80 ± 9 lbf-in) |

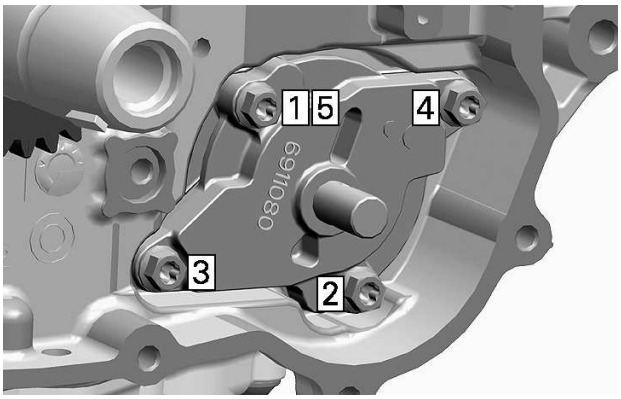


*TIGHTENING SEQUENCE*

7. Turn oil pump shaft and check for smooth operation of the oil pump assembly and axial play of the oil pump shaft.
8. Fill up oil tank and check oil level. Refer to *Replacing the Engine Oil* in this subsection.
9. Start engine and make sure oil pressure is within specifications (refer to *Testing the Engine Oil Pressure* in this subsection).

### *Oil Suction Pump Module*

### *Oil Suction Pump Module Location*

The oil suction pump module is located in the cylinder block, behind the magneto cover.

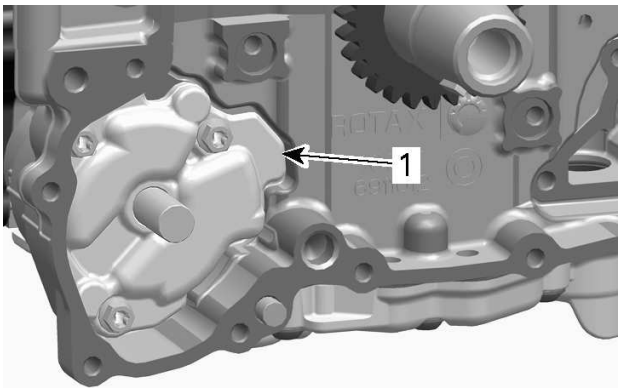


*1. Oil suction pump module*

### *Disassembling the Oil Suction Pump Module*

1. Remove *Oil Pump Drive Gears*, see procedure in this subsection.
2. Remove oil pump module cover.

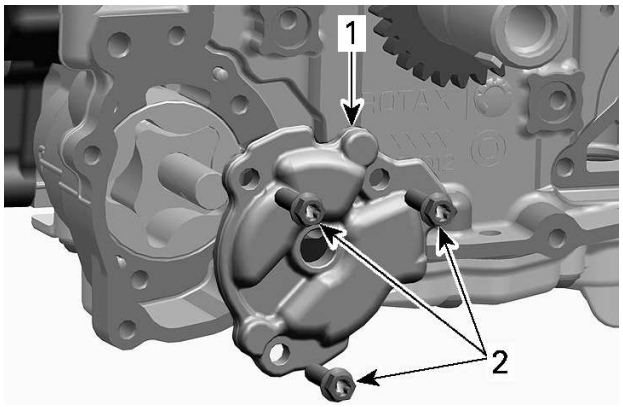


*1. Oil pump module cover*
*2. Retaining screws*

3. Disassemble the large oil suction pump as shown.

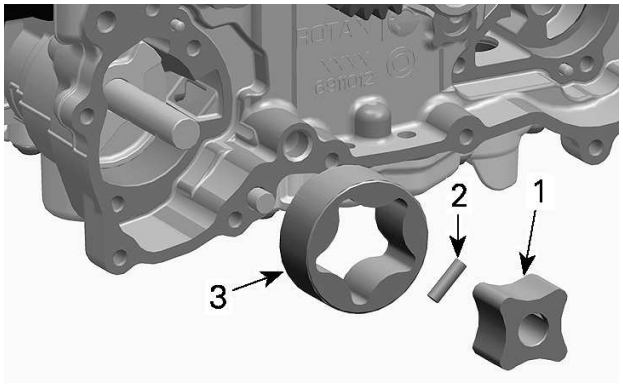


*1. Inner rotor*
*2. Needle pin*
*3. Outer rotor*

4. Disassemble the small oil suction pump as shown.

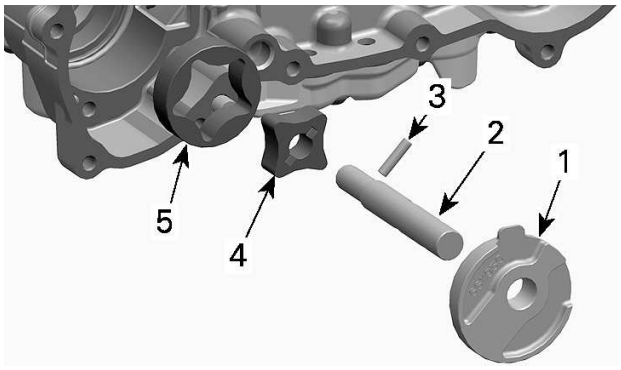


*1. Oil pump cover*
*2. Oil pump shaft*
*3. Needle pin*
*4. Inner rotor*
*5. Outer rotor*

5. Remove and discard the oil pump cover O-ring.

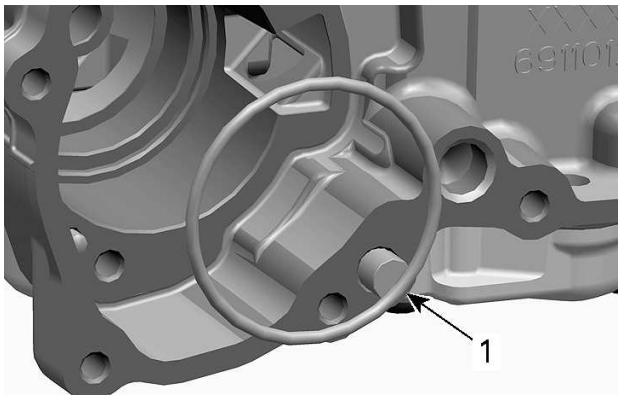


*1. Oil pump cover O-ring*

### *Inspecting the Oil Suction Pumps*

The inspection of both oil suction pumps is the same as for the oil pressure pump. Refer to *Oil Pressure Pump* in this subsection.

### *Assembling the Oil Suction Pump Module*

The assembly is the reverse of the disassembly procedure. However, pay attention to the following.

1. Lubricate small oil suction pump outer rotor with engine oil.

**NOTICE**

**When installing the oil pump rotors, make sure both marks are pointing toward the inside of the crankcase.**

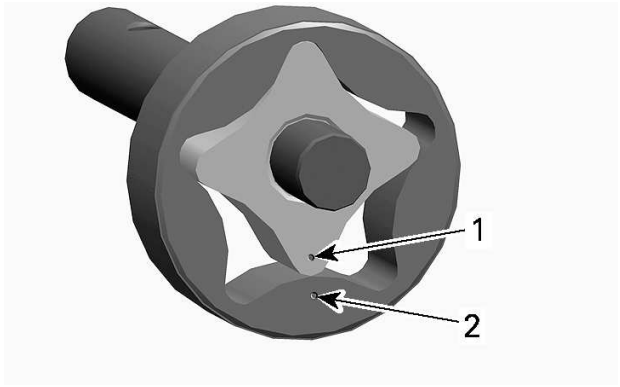


*1. Mark on inner rotor*
*2. Mark on outer rotor*

2. Install small oil suction pump outer rotor into crankcase oil pump bore.

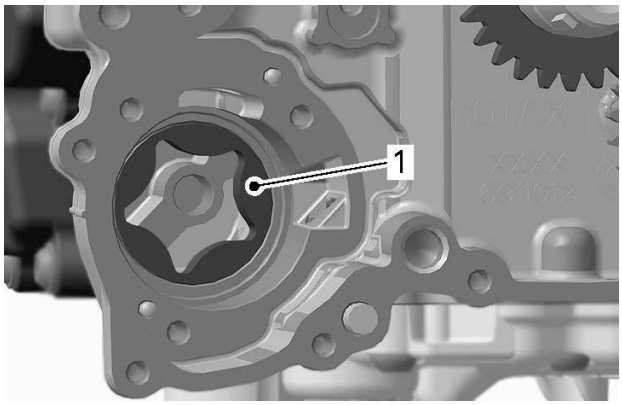


*1. Small oil suction pump outer rotor*

3. Install the needle pin in the bore of the oil pump shaft and place the small inner rotor on the shaft.

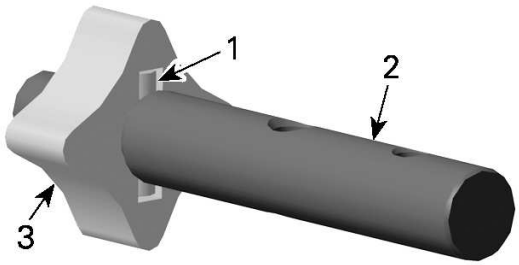


*1. Needle pin*
*2. Oil pump shaft*
*3. Small suction pump inner rotor*

4. Lubricate oil pump shaft and inner rotor with engine oil.
5. Install oil pump shaft assembly into the crankcase.

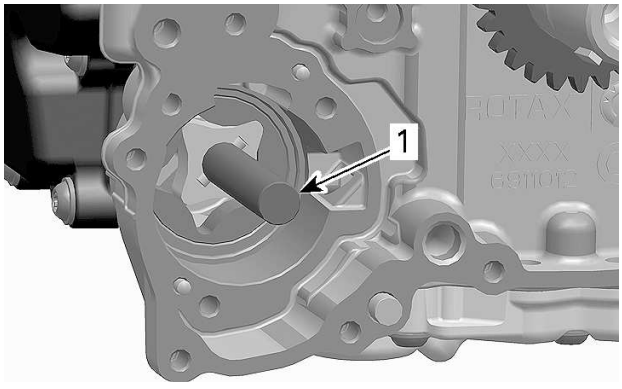


*1. Oil pump shaft with small oil suction pump*

6. Install a **NEW** oil pump cover O-ring.

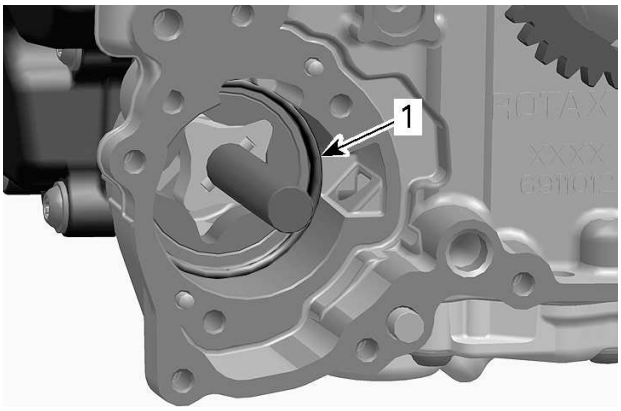


*1. Oil pump cover O-ring*

7. Lubricate both sides of the oil pump cover with engine oil.
8. Align tab of the oil pump cover with the upper recess in the crankcase. Push cover in until a click is heard, indicating the cover is properly installed.

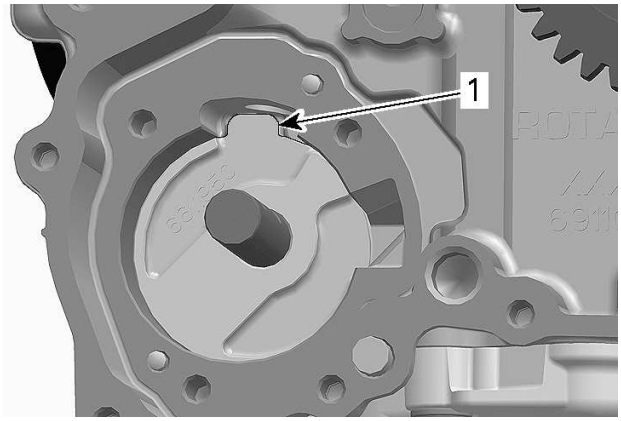


*1. Oil pump cover tab properly positioned*

9. Install large oil suction pump needle pin.
10. Install large oil suction pump inner rotor and outer rotor with the marks outwards.

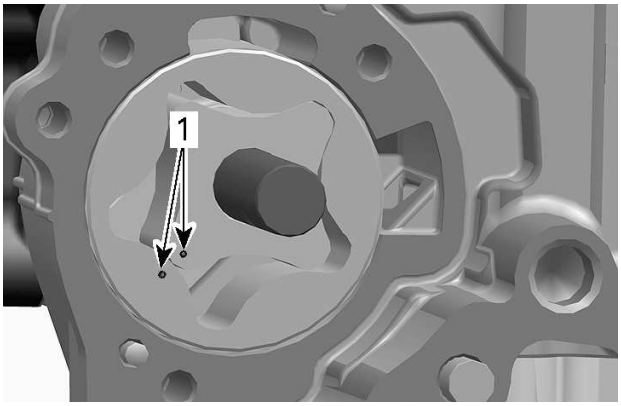


*1. Marks on inner and outer rotor*

11. Lubricate large oil suction pump parts with engine oil.

**NOTE:** Check if both needle pins are pressed into the crankcase.

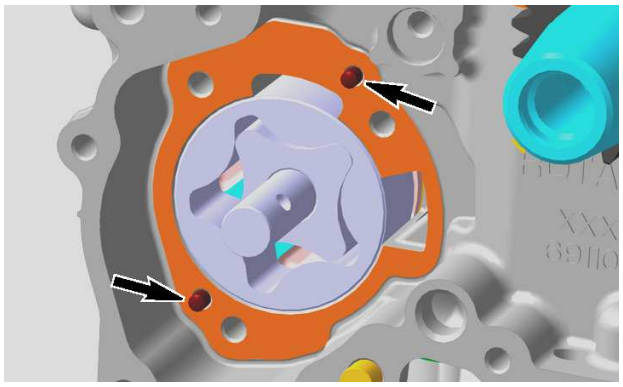

***NEEDLE PINS***

12. Install oil pump cover and tighten retaining screws to the following specified torque using the specified sequence.

| Tightening Torque | |
|---|---|
| Oil pump cover screws | 9 ± 1 Nm<br>(80 ± 9 lbf-in) |

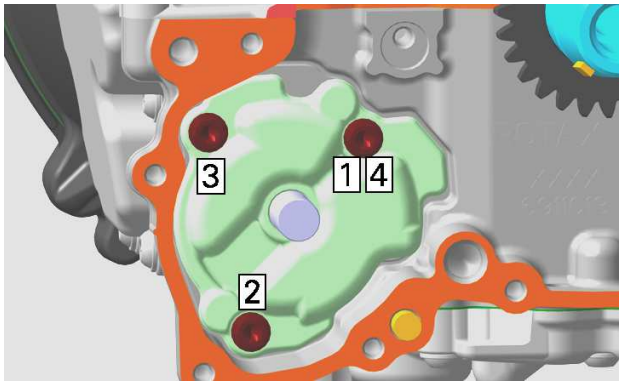


***TIGHTENING SEQUENCE***

13. Turn oil pump shaft and check for smooth operation of the oil pump assembly and axial play of the oil pump shaft.
14. Install other removed parts.
15. Fill up oil tank and check oil level. Refer to *Replacing the Engine Oil* in this subsection.
16. Start engine and make sure oil pressure is within specifications (refer to *Testing the Engine Oil Pressure* in this subsection).

### *Oil Sump Cover*

#### *Oil Sump Cover Location*

The oil sump cover is located on the engine bottom.

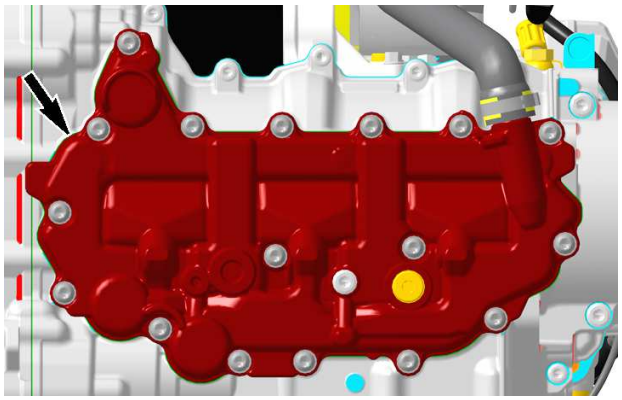

*900 ACE TURBO ENGINE SHOWN*

### *Removing the Oil Sump Cover*

1. Remove engine from vehicle. Refer to *Engine Removal and Installation* subsection.
2. Drain engine oil, refer to *Replacing the Engine Oil* in this subsection.

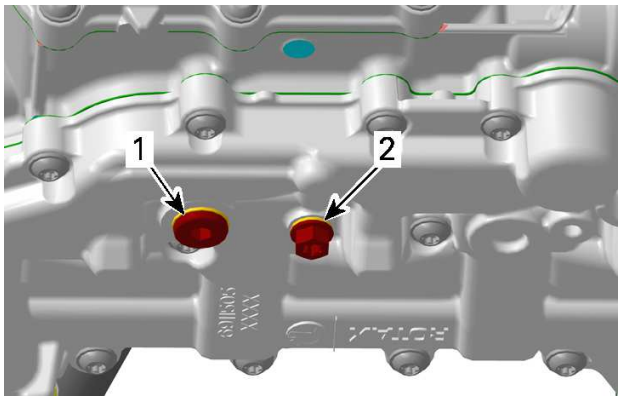


1. *Main drain plug*
2. *Secondary drain plug*

3. Remove clamp and turbo charger oil return hose.

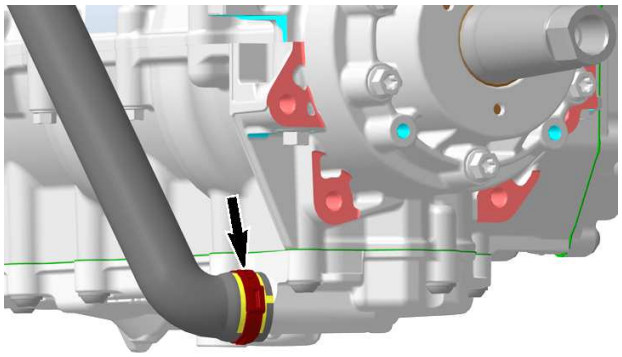

4. Unscrew oil sump cover retaining screws.
5. Remove oil sump cover. Discard gasket.
6. Remove and clean engine oil strainers.

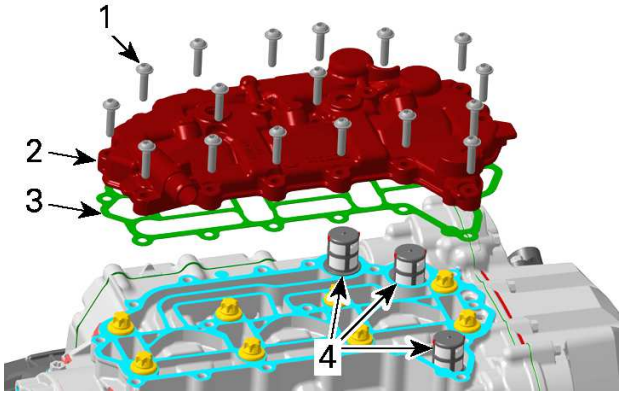


1. *Retaining screws*
2. *Oil sump cover*
3. *Gasket (discard it)*
4. *Engine oil strainers*

### *Inspecting the Oil Sump Cover*

1. Clean oil sump cover and engine oil strainers with a part cleaner, then use an air gun to dry it.
2. Blow out the oil orifices and check if they are not clogged.

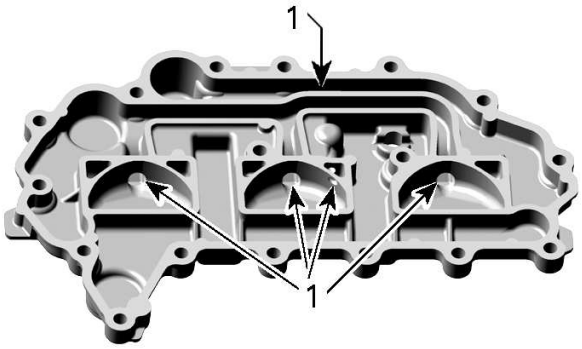


1. *Oil drain bores*

3. Check oil sump cover for cracks or other damage.
4. Check oil sump cover for flatness with straight edge.
5. Replace oil sump cover if necessary.
6. Check engine oil strainer for damage and change if necessary.

### *Installing the Oil Sump Cover*

1. Install a **NEW** oil sump cover gasket.
2. Install oil strainers as shown.

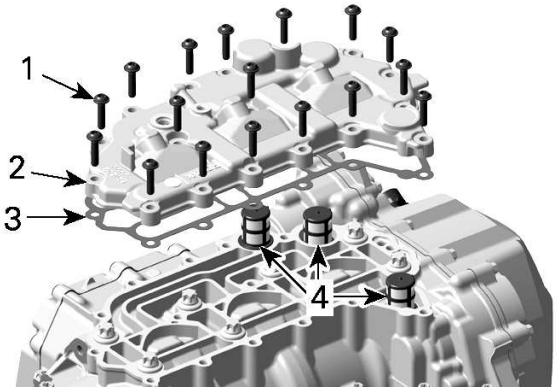


1. *Retaining screws*
2. *Oil sump cover*
3. *Gasket*
4. *Engine oil strainers*

3. Install oil sump cover on engine, then tighten retaining screws in two steps as follows:
   1. Tighten screws to specification according to the specified sequence.

| Tightening Torque | | |
|---|---|---|
| Oil sump cover screws | Step A | 5 ± 0.6 Nm (44 ± 5 lbf-in) |

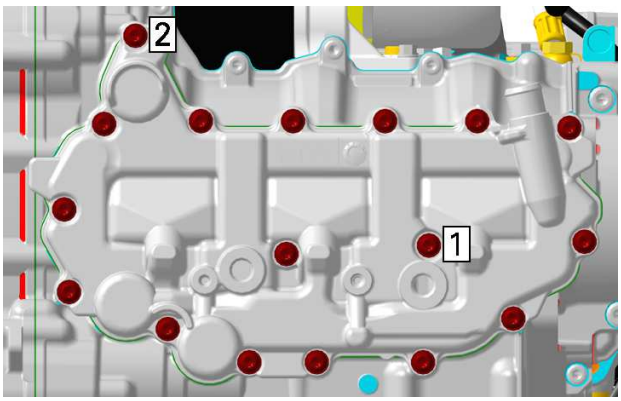


***TIGHTENING SEQUENCE STEP A***

   2. Tighten screws to specification according the specified sequence.

| Tightening Torque | | |
|---|---|---|
| Reused cylinder block | Step B | 9 ± 1 Nm (80 ± 9 lbf-in) |
| New cylinder block | | 11 ± 1 Nm (97 ± 9 lbf-in) |

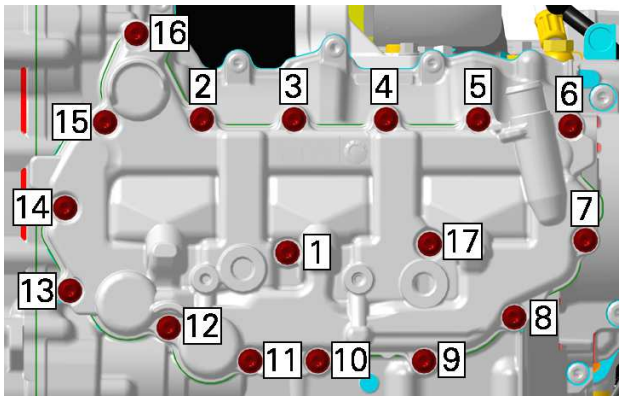


***TIGHTENING SEQUENCE STEP B***

4. Reinstall oil drain plugs using **NEW** sealing washers. Refer to *Replacing the Engine Oil* in this subsection.
5. Install engine in vehicle. Refer to *Engine Removal and Installation* subsection.
6. Fill up oil tank and check oil level. Refer to *Replacing the Engine Oil* in this subsection.

# Cooling System - Engine Components - GEN1



## SERVICE TOOLS


| Description | Part Number | Page |
|---|---|---|
| ECM ADAPTER TOOL | (P/N 529036166) | 94 |
| FLUKE 115 MULTIMETER | (P/N 529035868) | 94 |
| HANDLE | (P/N 420877650) | 100 |
| OIL SEAL PUSHER | (P/N 529036210) | 100 |
| ROTARY SEAL INSTALLER | (P/N 529036211) | 100 |
| TEST CAP | (P/N 529035991) | 93 |
| VACUUM/PRESSURE PUMP | (P/N 529021800) | 93 |


## SERVICE PRODUCTS

Midwest Manuals
Green Manuals
Paperless Manuals
For a Better Tomorrow
www.green-manuals.com


| Description | Part Number | Page |
|---|---|---|
| DOW CORNING 111 | | 96 |


If you bought this manual from any other seller please leave them
NEGATIVE feedback and notify us at bestshopmanuals@gmail.com

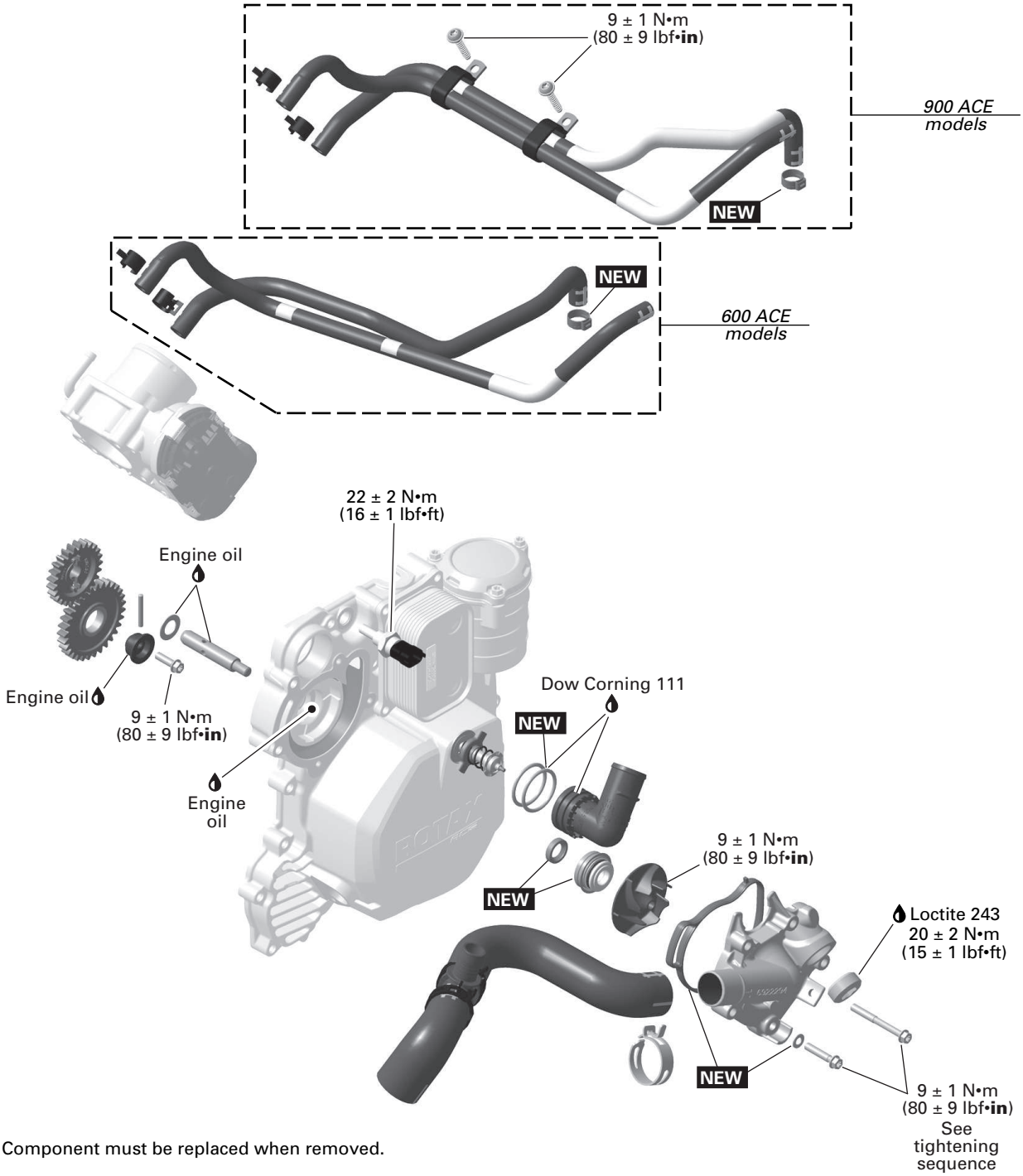


**NEW** = Component must be replaced when removed.

## General

This section refers to the following ECM:

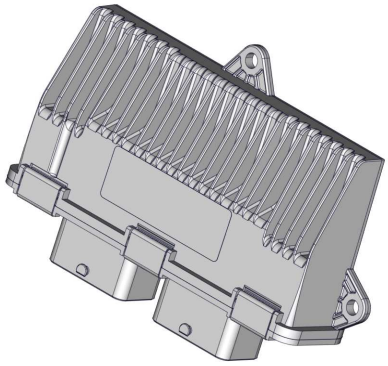

*ECM GEN1 – ME17*

For a better understanding, some illustrations were taken with engine out of vehicle.

**NOTE:** It is a good practice to check for fault codes using the BRP diagnostic software (BUDS2) as a first troubleshooting step. Refer to the *Diagnostic and Fault Codes* subsection.

**⚠ WARNING**

**To avoid potential burns, do not remove the coolant tank cap or loosen the cooling drain plug if the engine is hot.**

## Inspection

### *Cooling System Leak Test*

**NOTE:** This test confirms if there is a leak in the cooling system, including the engine.

1. Pressurize cooling system through coolant reservoir.

| | |
|---|---|
| **Test cap (P/N 529035991)** |  |
| **Vacuum/pressure pump (P/N 529021800)** |  |

| Cooling System Leak Test |
|---|
| 100 kPa (15 lbf/in²) |

2. If pressure drops, check all hoses and engine for coolant leaks. Spray a soap/water solution and look for air bubbles.
3. Check the leak indicator hole for an oil or coolant leak.

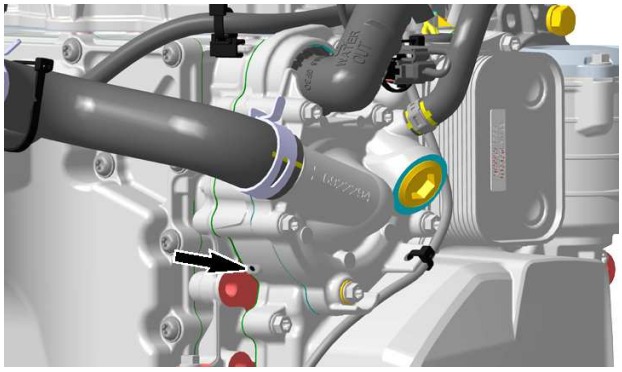

**NOTE:** In general leaking coolant indicates a damaged rotary seal. Leaking oil indicates a damaged oil seal. If either seal is leaking, both seals must be replaced at the same time. Refer to *Water Pump* in this subsection.

## Troubleshooting

The following is provided to help in diagnosing the probable source of troubles. It is a guideline and should not be assumed to show all causes for all problems.

Always check for fault codes. If a fault code is detected, service the fault code first.

### *Troubleshooting*

**1. Engine Overheating**

Low coolant level.

– *Refill and check for leaks (coolant leaking out of leak indicator hole, hoses or clamps missing or defective, or cylinder head gaskets leaks). Repair or replace.*

Dirty heat exchanger.

– *Clean heat exchanger fins. Replace heat exchanger as required.*

Air in cooling system.

– *Refill and bleed cooling system.*

Defective thermostat (does not open when engine is warm up).

– *Replace thermostat.*

Defective water pump.

– *Inspect and replace defective components.*

Coolant temperature sensor defective.

– *Check and replace.*

Wrong coolant concentration.

– *Check and adjust coolant concentration according to BRP's recommendations or replace coolant.*

Defective coolant reservoir cap.

– *Replace cap.*

Defective cooling fan.

– *Check cooling fan motor operation.*

– *Check fuse and relay of cooling fan motor.*

– *Check wiring harness of cooling fan motor.*

Snow guard is too high.

– *Check and adjust rear suspension.*

## Procedures

### *Coolant Temperature Sensor (CTS)*

#### *Overheat Warning*

The CTS will cause the engine overheat warning to come on when the coolant temperature is above 110 °C (230 °F).

#### *CTS Location*

The CTS is located between the water pump and the oil cooler.

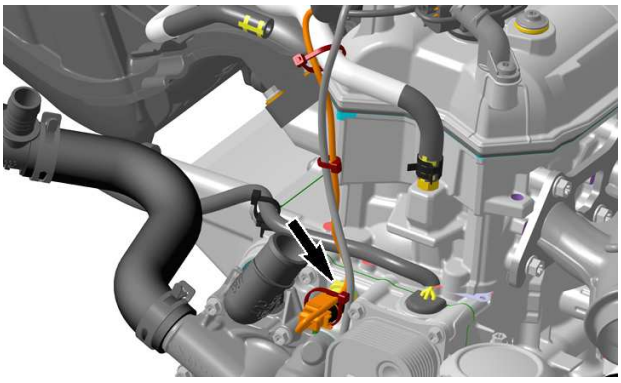

#### *Testing the CTS using BUDS2*

1. Connect the vehicle to BUDS2. Refer to *Communication Tools* subsection.
2. Select the following:
   - Measurements page
   - ECM button
   - Presets and ECM - BASIC tabs.
3. Look for the engine temperature indication.

   The engine temperature gauge in BUDS2 should provide an indication of the actual engine coolant temperature. Otherwise, perform *Testing the CTS Resistance*.

#### *Testing the CTS Resistance*

1. Disconnect the CTS connector.
2. Test the resistance of the sensor as per following tables.

| | |
|---|---|
| **Fluke 115 multimeter (P/N 529035868)** |  |

| CTS Resistance Test | | |
|---|---|---|
| **CTS Pin** | | **Specification** |
| 1 | 2 | Refer to CTS Temperature Sensor Table |

| CTS Temperature Sensor Table | | | |
|---|---|---|---|
| Temperature | | Specification Ω | |
| °C | °F | LOW | HIGH |
| - 40 | - 40 | 38400 | 52600 |
| - 10 | 14 | 8200 | 10,600 |
| 0 | 32 | 5900 | 6900 |
| 20 | 68 | 2200 | 2800 |
| 80 | 176 | 295 | 350 |
| 120 | 248 | 105 | 120 |

**NOTE:** To test sensor at various temperatures, remove sensor and use a heat gun, ice and a thermometer.

3. If resistance is out of specification, replace the CTS.
4. If resistance test is good, proceed with the following steps.
5. Reconnect the CTS connector.
6. Install ECM-A connector on adapter tool.

| | |
|---|---|
| **ECM adapter tool (P/N 529036166)** |  |

7. Recheck resistance from the ECM connector as per following table.

| CTS Resistance Test at the ECM | | |
|---|---|---|
| ECM Adapter Pin | | Specification |
| A1 | J2 | Refer to CTS Temperature Sensor Table |

8. If resistance value is correct, refer to *Replacing the CTS*.
9. If resistance value is incorrect, repair the connectors or replace the wiring harness between ECM connector and the CTS.

### *Replacing the CTS*

1. Drain coolant, refer to *Cooling System - Vehicle Components* subsection.
2. Cut locking ties of wiring harnesses and move wiring aside for access.

**NOTE:** Take note of wiring and locking tie position before removal.

3. Disconnect CTS connector.
4. Remove CTS from engine.
5. Install new CTS and torque as specified.

| Tightening Torque | |
|---|---|
| CTS | 22 ± 2 Nm (16 ± 1 lbf-ft) |

6. Reinstall remaining removed parts.

**NOTE:** Ensure to reinstall wiring harness as noted prior to removal.

7. Refill and bleed the cooling system, refer to *Cooling System - Vehicle Components* subsection.

### *Thermostat*

### *Thermostat Location*

The thermostat is located on engine MAG side.

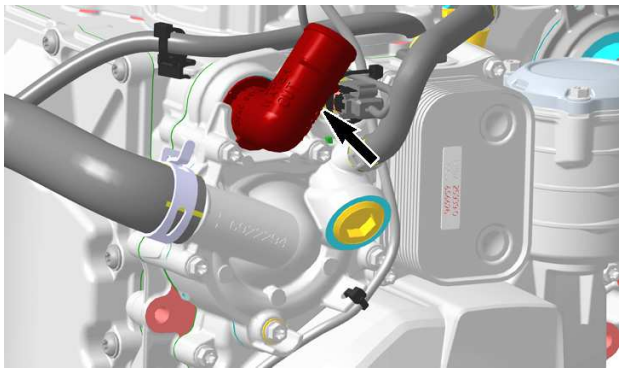

*THERMOSTAT HOUSING*

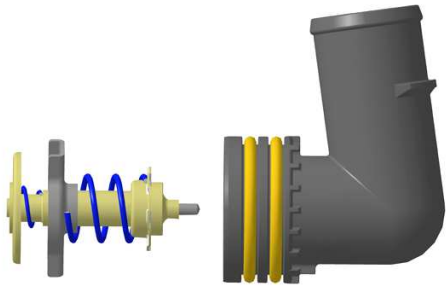

### *Removing the Thermostat*

1. Remove the water pump housing. Refer to procedure in this subsection.
2. Remove thermostat housing then thermostat.

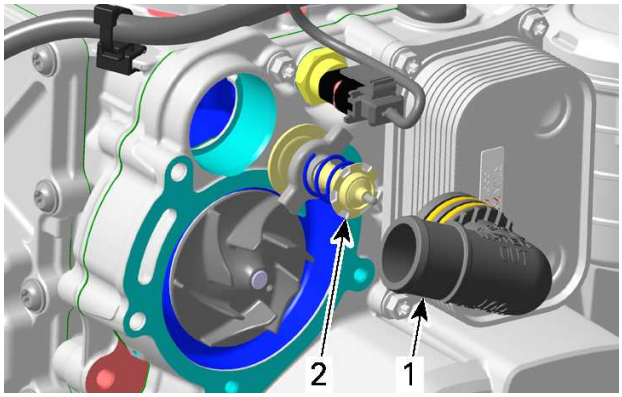


*1. Thermostat housing*
*2. Thermostat*

**NOTE:** Use shop rags to catch any spilled engine coolant.

### *Testing the Thermostat*

1. Put the thermostat in water and heat the water.

| Thermostat Temperature | |
|---|---|
| Starts to open | 75 °C (167 °F) |
| Fully open | 95 °C (203 °F) |

2. Replace thermostat if out of specification.

### *Installing the Thermostat*

The installation is the reverse of the removal procedure. However pay attention to the following:

1. Install **NEW** O-rings on thermostat housing.
2. Lubricate O-rings.

| **Dow Corning 111** |
|---|

3. Insert thermostat in thermostat housing.

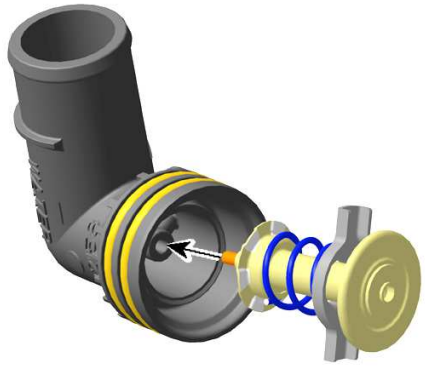

4. Align both tabs of thermostat with the recess in the magneto cover.

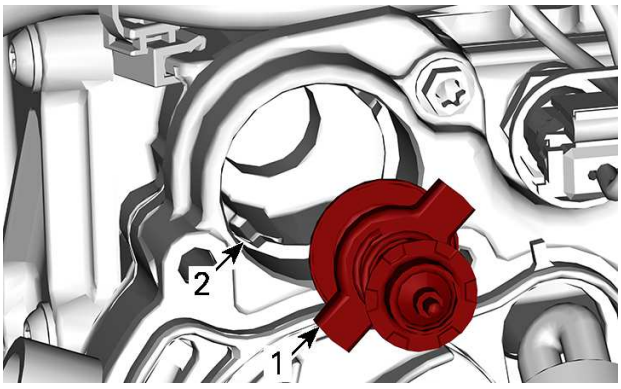


*1. Thermostat tabs*
*2. Magneto cover recess*

5. Install water pump housing, refer to *Installing the Water Pump Housing* in this subsection.
6. Refill and bleed cooling system. Refer to *Maintenance* in *Cooling System - Vehicle Components* subsection.

### *Water Pump*

### *Water Pump Location*

The water pump is located on engine MAG side.

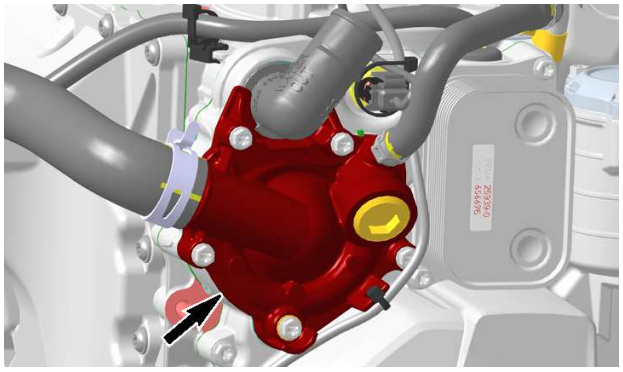

### *Removing the Water Pump Housing*

Any work on the water pump requires the engine removal. Only the housing may be removed with the engine in place.

1. Refer to the appropriate subsection to remove:
   - Muffler
   - Driven pulley and countershaft
   - LH side hull
   - Reverse handle and its support (if equipped).
2. Drain engine coolant. Refer to *Cooling System - Vehicle Components* subsection.
3. Disconnect outlet hose from thermostat housing.
4. Cut locking tie securing the stator cable harness to the inlet hose.
5. Disconnect inlet hose from water pump.

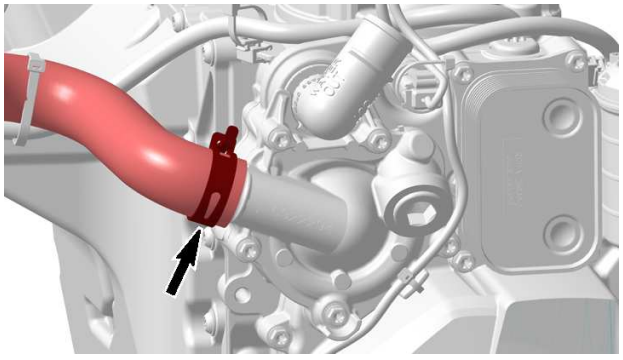

6. Cut locking ties securing the CPS and CTS wire.

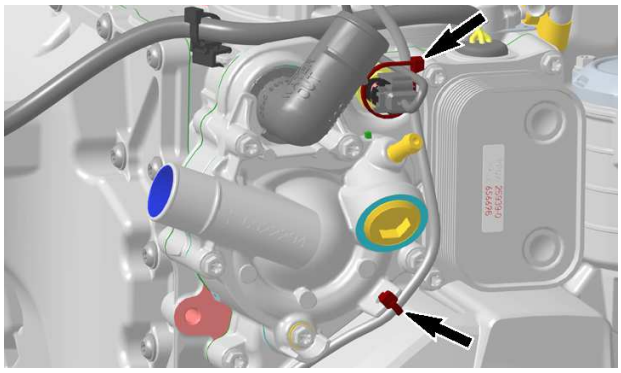

7. ***900 ACE Models***
8. Remove the following fasteners.

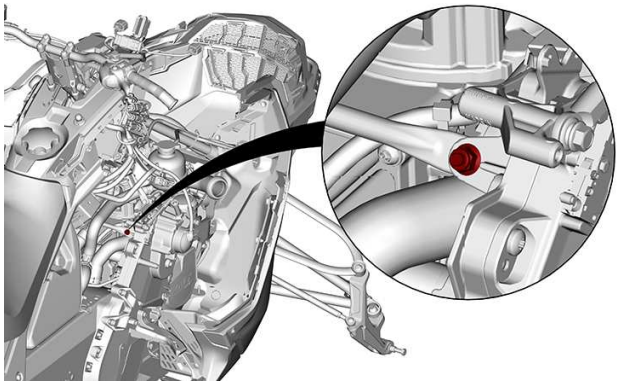

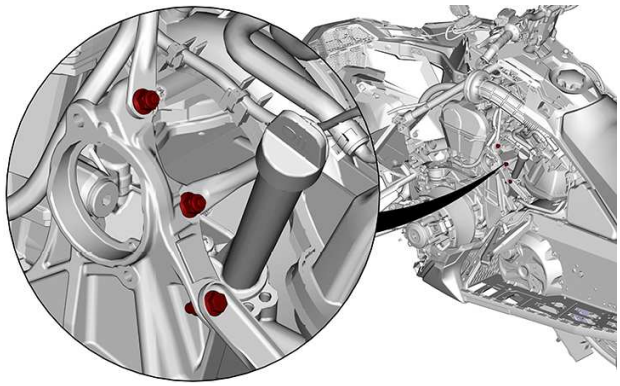

9. Support the engine on the pulley side and remove the following fasteners.

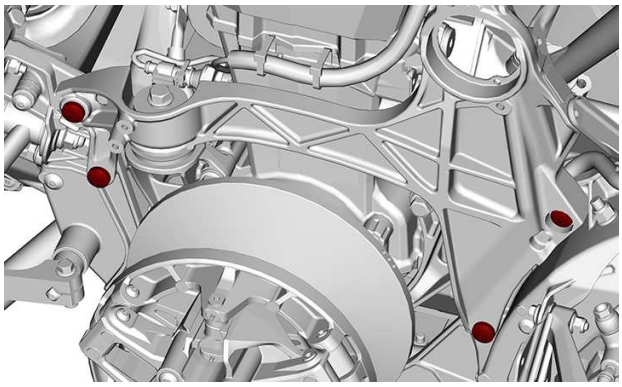

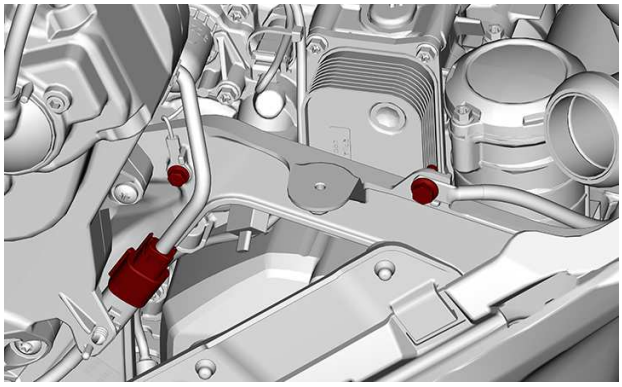

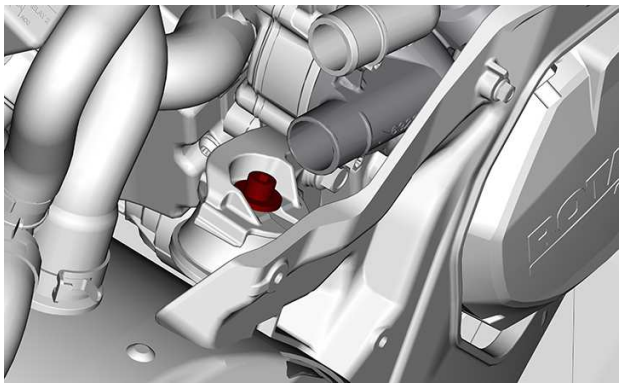

***CHAINCASE REMOVED FOR CLARITY***

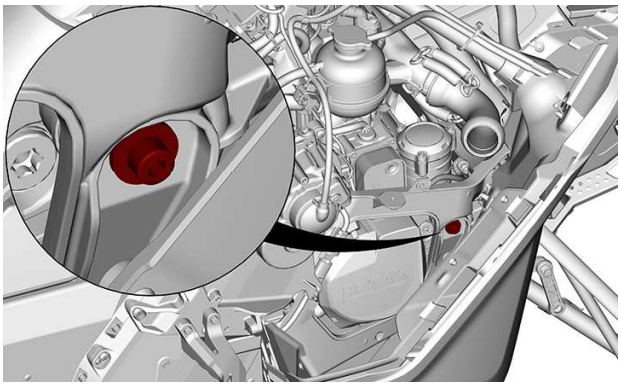

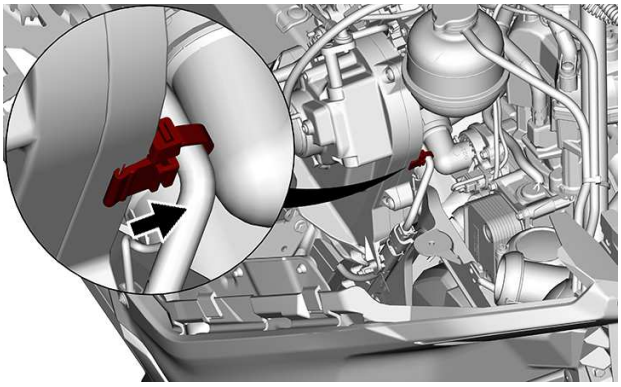

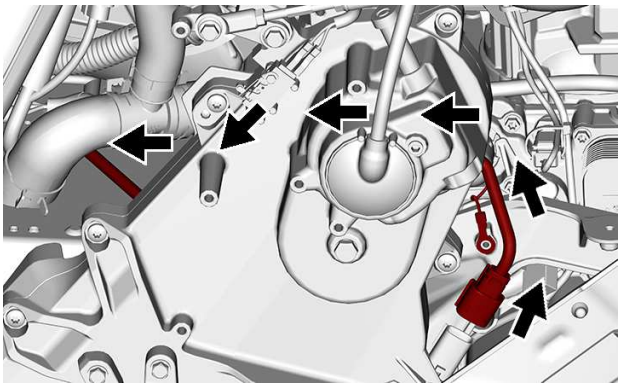

10. Pull on the drive pulley to make room for water pump screws access.
11. Place a pry bar between the engine support and the engine rubber mount, and lift the engine to insert a shim between the frame and the magneto cover

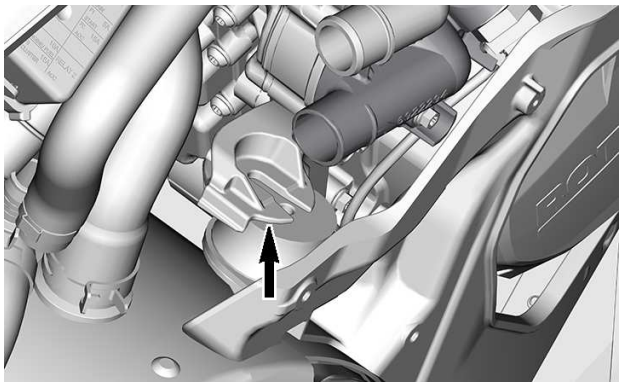

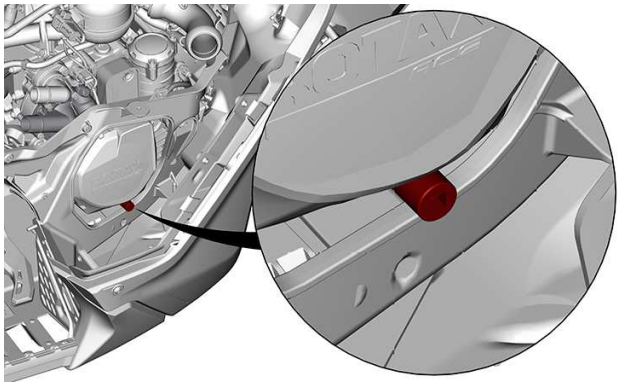

***12 MM (1/2 IN) SHIM***

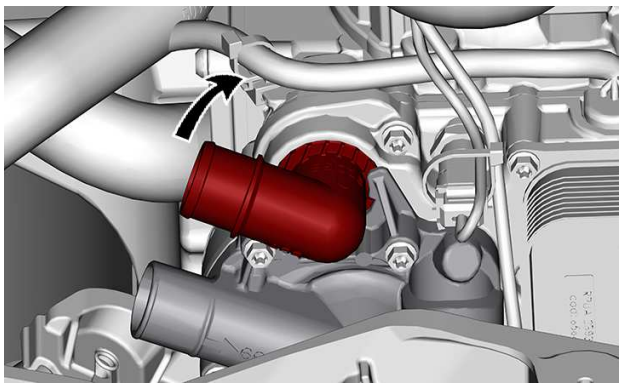

12. ***All Models***
13. Using a compact ratchet wrench and a Torx bit, remove the water pump housing screws.

**NOTE:** Use shop rags to catch any spilled engine coolant.

### *Disassembling the Water Pump*

1. Unscrew impeller counterclockwise using appropriate pliers.

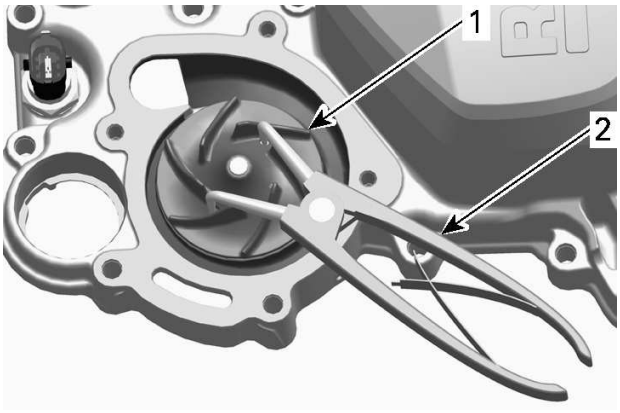


1. *Impeller*
2. *Pliers*

2. Remove magneto cover. Refer to *Magneto and Starter - GEN1* subsection.
3. Remove the following components from magneto cover:
   - Water pump gear
   - Needle pin
   - Thrust washer.

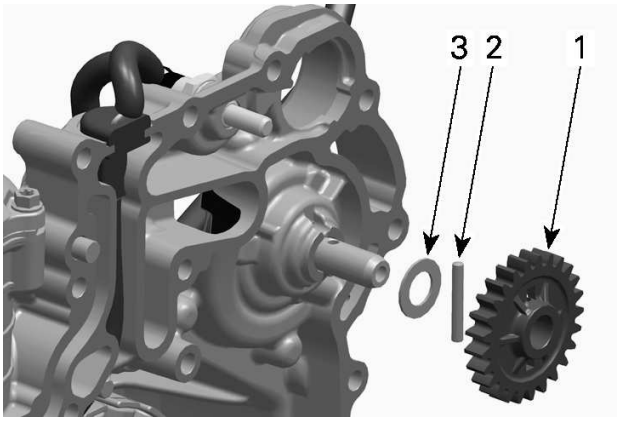


1. *Water pump gear*
2. *Needle pin*
3. *Thrust washer*

4. Remove water pump shaft using a plastic mallet.

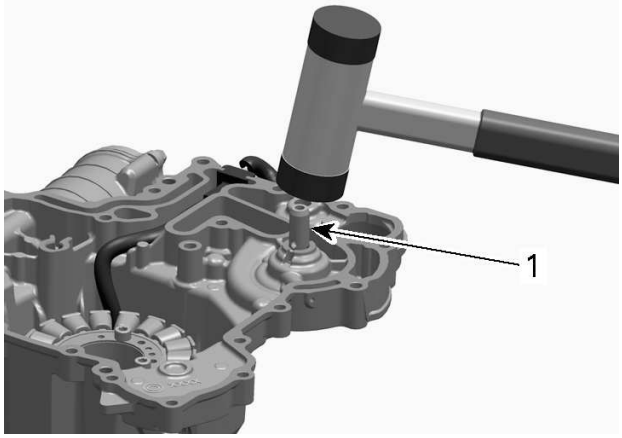


1. *Water pump shaft*

5. Remove the following components from magneto cover:
   - Oil seal
   - Remaining parts of rotary seal.



**NOTICE**

**Be careful not to damage the surface of the rotary seal bore in the magneto cover.**

6. Separate rotary seal from water pump shaft.

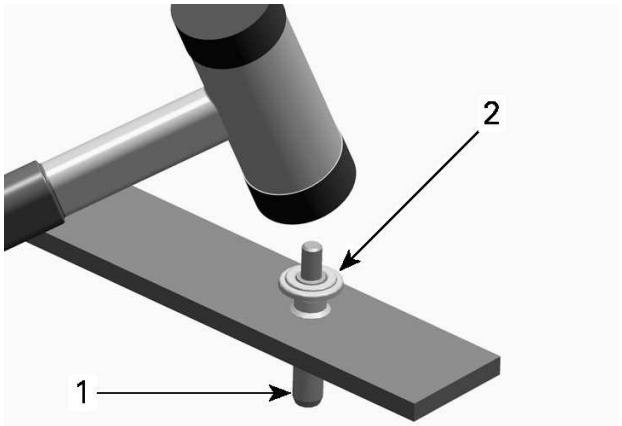


1. *Water pump shaft.*
2. *Rotary seal*

### *Inspecting the Water Pump*

1. Check area of water pump housing for cracks or other visible damage.
2. Check water pump gear for wear or broken teeth.
3. Check if housing gasket is brittle, hard or damaged.
4. Check water pump shaft for visible damage.
5. Replace parts if necessary.

### *Assembling the Water Pump*

**NOTE:** Always replace oil seal and rotary seal at the same time.

1. Clean rotary seal surface from old sealant.

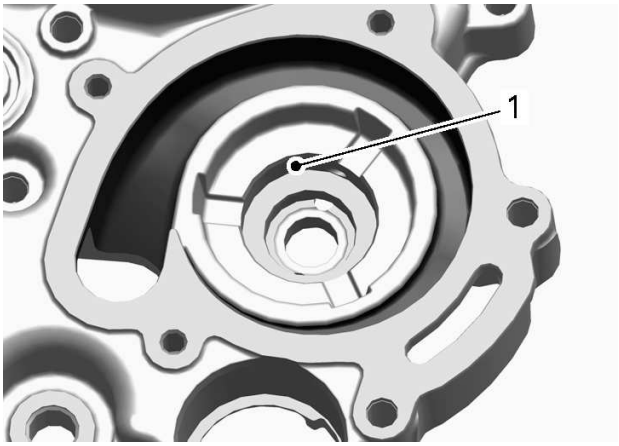


*1. Clean surface*

2. Apply engine oil on press fit area of oil seal.

| NOTICE |
| --- |
| **Never use engine oil on the press fit area of the rotary seal.** |

3. Install **NEW** oil seal in magneto cover.

| | |
| --- | --- |
| **Oil seal pusher (P/N 529036210)** |  |
| **Handle (P/N 420877650)** |  |

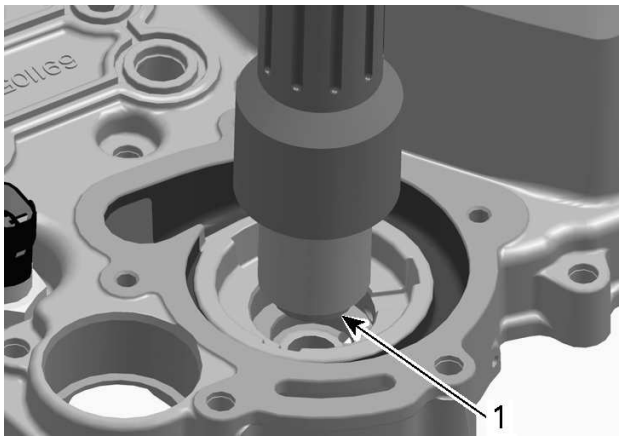


*1. Oil seal*

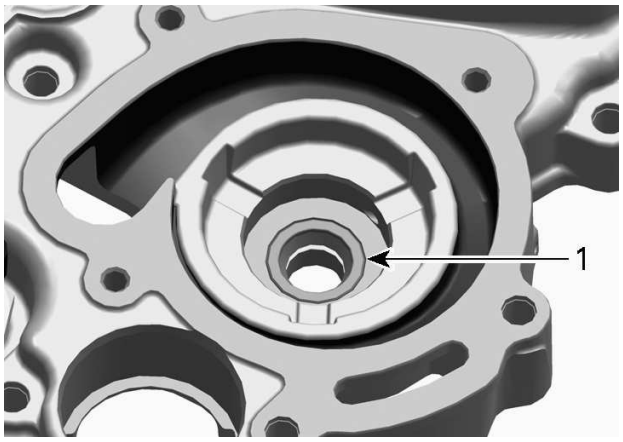


*1. Oil seal correctly installed*

4. Install **NEW** rotary seal on magneto cover using a press.

| | |
| --- | --- |
| **Rotary seal installer (P/N 529036211)** |  |

**NOTE:** Prior to installing, ensure that sealing lip of rotary seal is not damaged.

| NOTICE |
| --- |
| **Never use a hammer for rotary seal installation. Only use a press to avoid damaging the ceramic component.** |

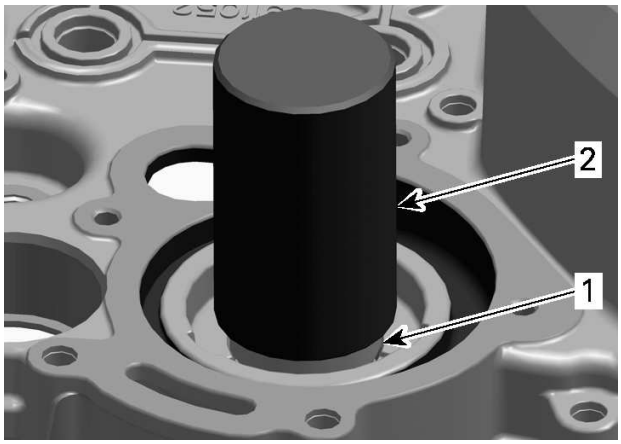


1. *Rotary seal*
2. *Rotary seal installer*

5. Assemble the following components onto water pump shaft.
   - Needle pin
   - Thrust washer.

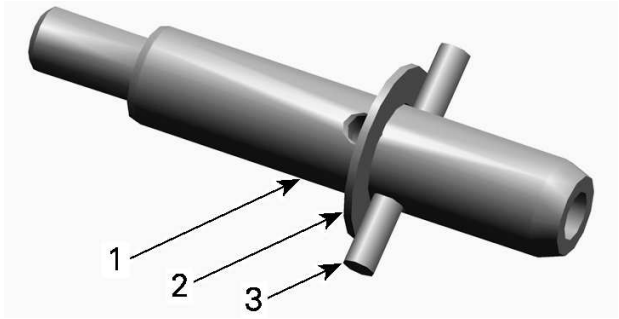


1. *Water pump shaft*
2. *Thrust washer*
3. *Needle pin*

6. Slide water pump shaft into rotary seal using a press.

**NOTE:** To avoid damaging the rotary seal and to achieve the proper preload support the rotary seal with the rotary seal installer.

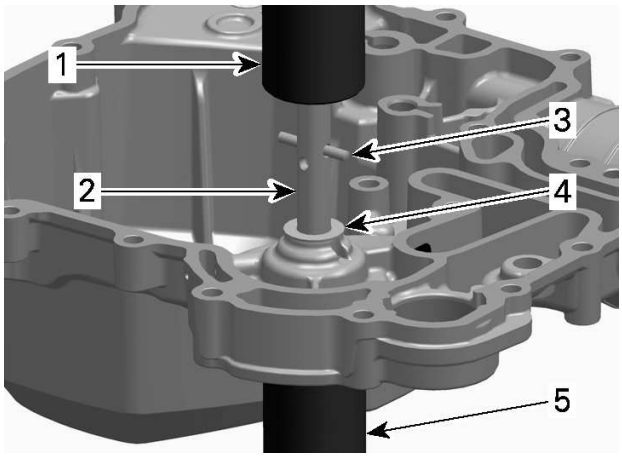


1. *Press*
2. *Water pump shaft*
3. *Needle pin*
4. *Thrust washer*
5. *Rotary seal installer*

7. Carefully press water pump shaft until needle pin touches thrust washer.

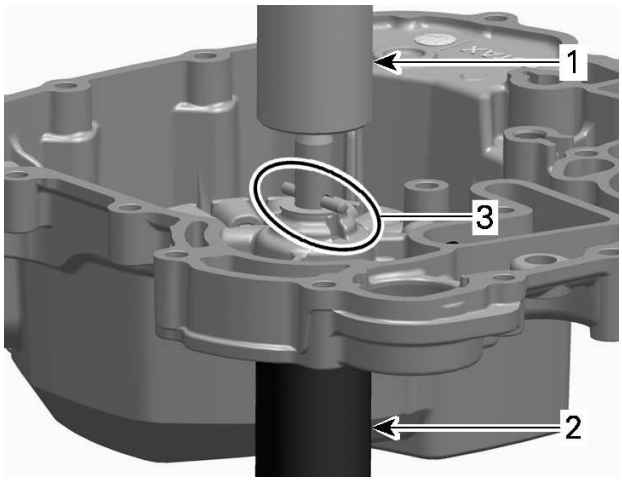


1. *Press*
2. *Rotary seal installer*
3. *Needle pin touches thrust washer*

**NOTICE**

**Never use a hammer to install water pump shaft into rotary seal.**

**NOTE:** After installation, water pump shaft must rotate freely.

8. Screw impeller clockwise using appropriate pliers.

**NOTICE**

**Be careful not to damage impeller vanes during its installation.**

9. Install magneto cover. Refer to *Magneto and Starter - GEN1* subsection.

### *Installing the Water Pump Housing*

The installation is the reverse of the removal procedure. However, pay attention to the following:

**NOTICE**

**When installing the water pump housing, ensure the NEW gasket is precisely positioned in the pump housing groove to prevent leakage.**

1. Install a **NEW** sealing washer on drain screw.
2. Tighten water pump housing retaining screws to specification as per the following procedure.

| Tightening Torque | |
|---|---|
| Water pump housing retaining screws | 9 ± 1 Nm (80 ± 9 lbf-in) |

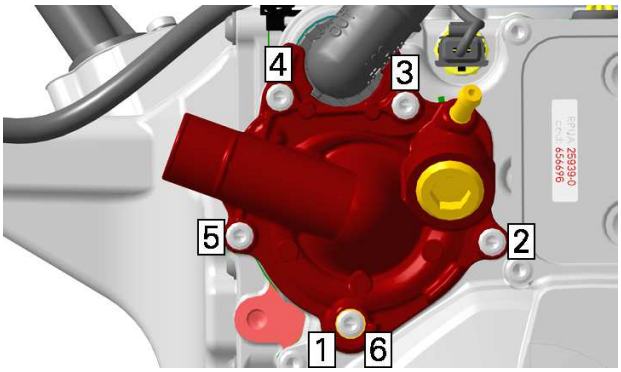


*TIGHTENING SEQUENCE*

3. Turn thermostat housing to proper position.

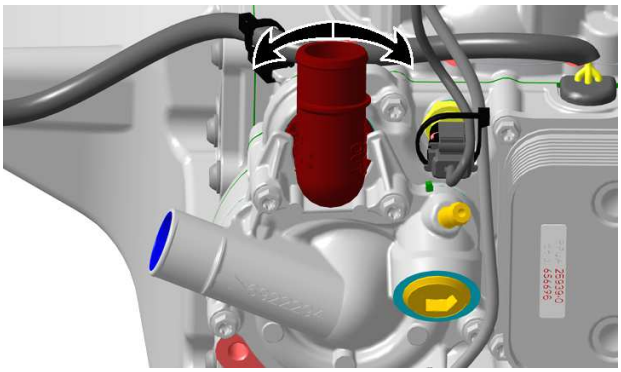

4. Install hose on thermostat housing with a **NEW** Oetiker clamp.
5. Install remaining parts. Refer to their applicable subsection.

### *Water Pump Drive Gear*

### *Water Pump Drive Gear Location*

The water pump drive gear is located behind the magneto cover.

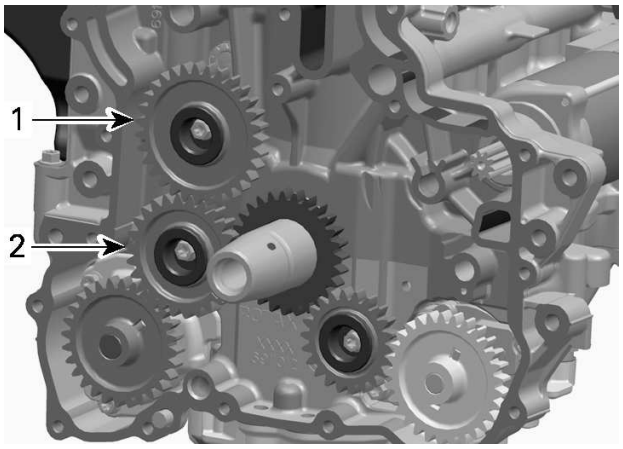


*1. Water pump drive gear 31 T*
*2. Intermediate gear, refer to Lubrication System - Gen1*

### *Removing the Water Pump Drive Gear*

1. Remove engine from vehicle. Refer to *Engine Removal and Installation* subsection.
2. Refer to *Magneto and Starter - GEN1* subsection and remove:
   - Magneto cover
   - Magneto flywheel.
3. Remove screw securing water pump drive gear.
4. Remove bearing sleeve.
5. Slide off water pump drive gear.

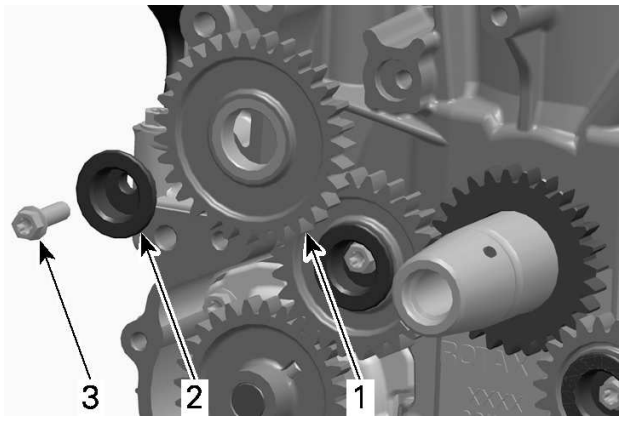


*1. Water pump drive gear 31 T*
*2. Bearing sleeve*
*3. M6 x 20 screw*

### *Inspecting the Water Pump Drive Gear*

Inspect gear for wear or other damage.

Replace gear if necessary.

### *Installing the Water Pump Drive Gear*

The installation is the reverse of the removal procedure. However, pay attention to the following:

1. Apply engine oil on bearing sleeve.

2. Tighten water pump drive gear to specification.

| Tightening Torque | |
|---|---|
| Water pump drive gear retaining screw | 9 ± 1 Nm (80 ± 9 lbf-in) |

# Cooling System - Engine Components - GEN2

## SERVICE TOOLS


| Description | Part Number | Page |
|---|---|---|
| ECM ADAPTER TOOL GEN2 | (P/N 529036513) | 107 |
| FLUKE 115 MULTIMETER | (P/N 529035868) | 107 |
| HANDLE | (P/N 420877650) | 113 |
| OIL SEAL PUSHER | (P/N 529036210) | 113 |
| ROTARY SEAL INSTALLER | (P/N 529036211) | 114 |
| TEST CAP | (P/N 529035991) | 106 |
| VACUUM/PRESSURE PUMP | (P/N 529021800) | 106 |


## SERVICE PRODUCTS


| Description | Part Number | Page |
|---|---|---|
| DOW CORNING 111 | | 109 |

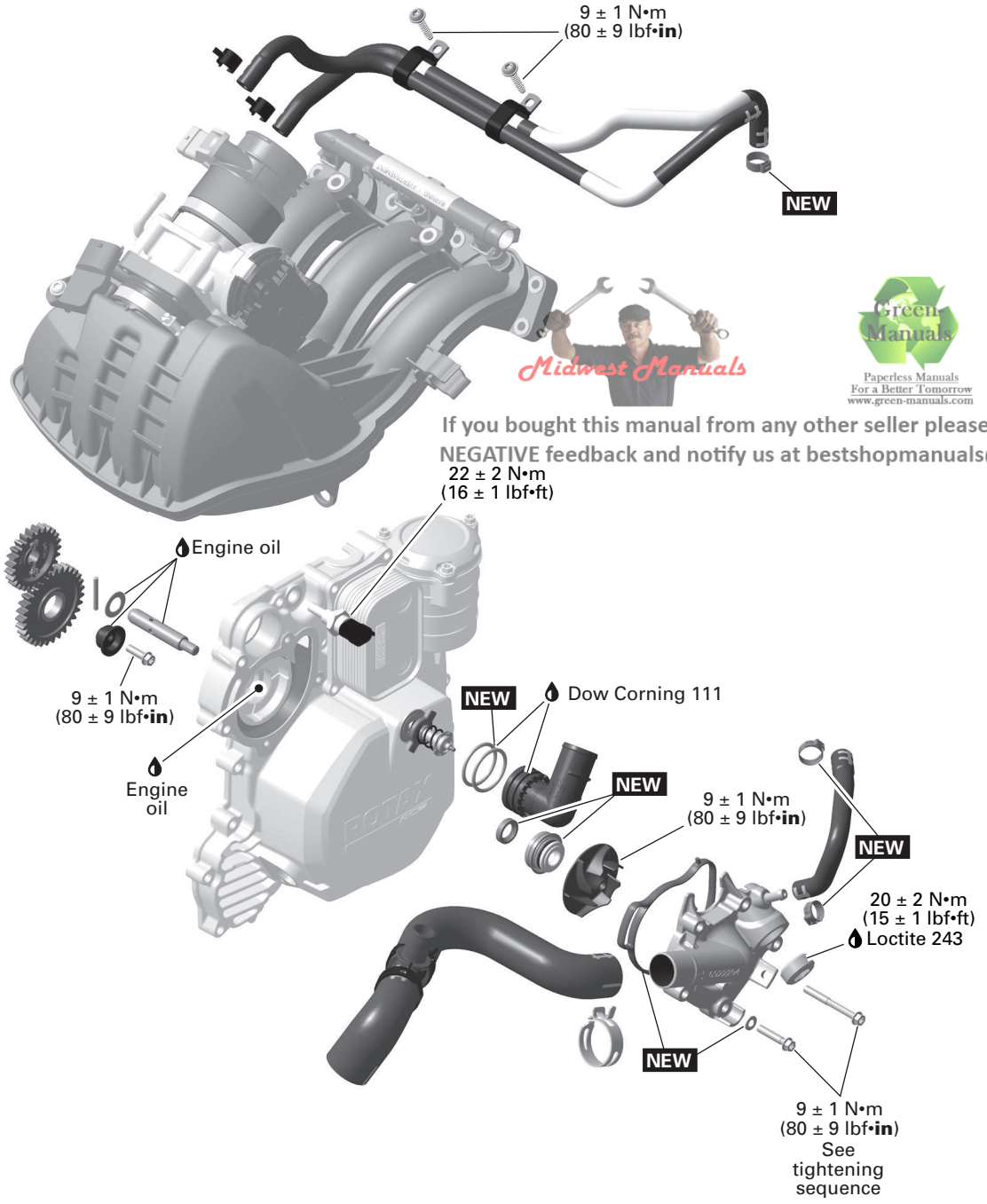


Midwest Manuals
Green Manuals
Paperless Manuals
For a Better Tomorrow
www.green-manuals.com
If you bought this manual from any other seller please leave them
NEGATIVE feedback and notify us at bestshopmanuals@gmail.com

**NEW** = Component must be replaced when removed.

## General

This section refers to the following ECM:

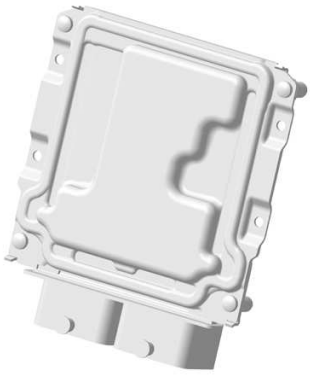

*ECM GEN2 – XCU*

For a better understanding, some illustrations were taken with engine out of vehicle.

**NOTE:** It is a good practice to check for fault codes using the BRP diagnostic software (BUDS2) as a first troubleshooting step. Refer to the *Diagnostic and Fault Codes* subsection.

| ⚠ WARNING |
|---|
| **To avoid potential burns, do not remove the coolant tank cap or loosen the cooling drain plug if the engine is hot.** |

## Inspection

### *Cooling System Leak Test*

**NOTE:** This test confirms if there is a leak in the cooling system, including the engine.

1. Pressurize cooling system through coolant reservoir.

| | |
|---|---|
| **Test cap (P/N 529035991)** |  |
| **Vacuum/pressure pump (P/N 529021800)** |  |

| Cooling System Leak Test |
|---|
| 100 kPa (15 lbf/in²) |

2. If pressure drops, check all hoses and engine for coolant leaks. Spray a soap/water solution and look for air bubbles.
3. Check the leak indicator hole for an oil or coolant leak.

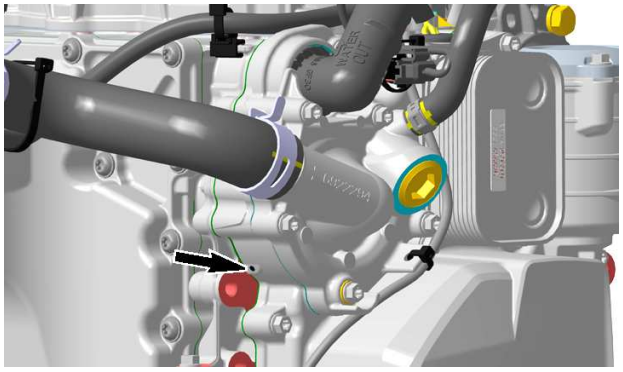

**NOTE:** In general leaking coolant indicates a damaged rotary seal. Leaking oil indicates a damaged oil seal. If either seal is leaking, both seals must be replaced at the same time. Refer to *Water Pump* in this subsection.

## Troubleshooting

The following is provided to help in diagnosing the probable source of troubles. It is a guideline and should not be assumed to show all causes for all problems.

Always check for fault codes. If a fault code is detected, service the fault code first.

### *Troubleshooting*

**1. Engine Overheating**

Low coolant level.

– *Refill and check for leaks (coolant leaking out of leak indicator hole, hoses or clamps missing or defective, or cylinder head gaskets leaks). Repair or replace.*

Dirty heat exchanger.

– *Clean heat exchanger fins. Replace heat exchanger as required.*

Air in cooling system.

– *Refill and bleed cooling system.*

Defective thermostat (does not open when engine is warm up).

– *Replace thermostat.*

Defective water pump.

– *Inspect and replace defective components.*

Coolant temperature sensor defective.

– *Check and replace.*

Wrong coolant concentration.

– *Check and adjust coolant concentration according to BRP's recommendations or replace coolant.*

Defective coolant reservoir cap.

– *Replace cap.*

Defective cooling fan.

– *Check cooling fan motor operation.*

– *Check fuse and relay of cooling fan motor.*

– *Check wiring harness of cooling fan motor.*

Snow guard is too high.

– *Check and adjust rear suspension.*

## Procedures

### *Coolant Temperature Sensor (CTS)*

#### *Overheat Warning*

The CTS will cause the engine overheat warning to come on when the coolant temperature is above 110 °C (230 °F).

#### *CTS Location*

The CTS is located between the water pump and the oil cooler.

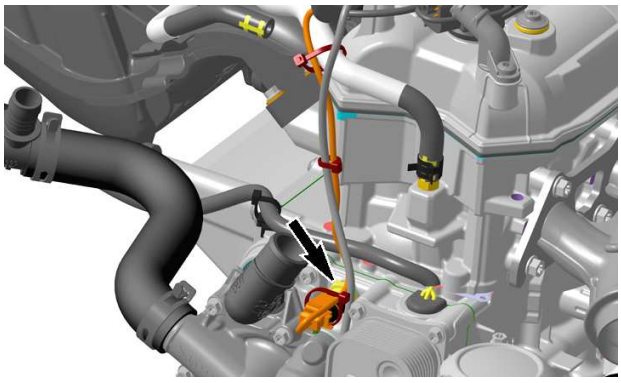

#### *Testing the CTS using BUDS2*

1. Connect the vehicle to BUDS2. Refer to *Communication Tools* subsection.
2. Select the following:
   - Measurements page
   - ECM button
   - Presets and ECM - BASIC tabs.
3. Look for the engine temperature indication.

   The engine temperature gauge in BUDS2 should provide an indication of the actual engine coolant temperature. Otherwise, perform *Testing the CTS Resistance*.

#### *Testing the CTS Resistance*

1. Disconnect the CTS connector.
2. Test the resistance of the sensor as per following tables.

| | |
|---|---|
| **Fluke 115 multimeter (P/N 529035868)** |  |

| Cts Resistance Test | | |
|---|---|---|
| **CTS Pin** | | **Specification** |
| 1 | 2 | Refer to CTS Temperature Sensor Table |

| CTS Temperature Sensor Table | | | |
|---|---|---|---|
| Temperature | | Specification Ω | |
| °C | °F | LOW | HIGH |
| - 40 | - 40 | 38400 | 52600 |
| - 10 | 14 | 8200 | 10,600 |
| 0 | 32 | 5900 | 6900 |
| 20 | 68 | 2200 | 2800 |
| 80 | 176 | 295 | 350 |
| 120 | 248 | 105 | 120 |

**NOTE:** To test sensor at various temperatures, remove sensor and use a heat gun, ice and a thermometer.

3. If resistance is out of specification, replace the CTS.
4. If resistance test is good, proceed with the following steps.
5. Reconnect the CTS connector.
6. Install ECM-13 connector on adapter tool.

| | |
|---|---|
| **ECM adapter tool GEN2 (P/N 529036513)** |  |

7. Recheck resistance from the ECM connector as per following table.

| CTS Resistance Test at the ECM | | |
|---|---|---|
| ECM Adapter Pin | | Specification |
| 22 | 39 | Refer to CTS Temperature Sensor Table |

8. If resistance value is correct, refer to *Replacing the CTS*.
9. If resistance value is incorrect, repair the connectors or replace the wiring harness between ECM connector and the CTS.

### *Replacing the CTS*

1. Drain coolant, refer to *Cooling System - Vehicle Components* subsection.
2. Cut locking ties of wiring harnesses and move wiring aside for access.

**NOTE:** Take note of wiring and locking tie position before removal.

3. Disconnect CTS connector.
4. Remove CTS from engine.
5. Install new CTS and torque as specified.

| Tightening Torque | |
|---|---|
| CTS | 22 ± 2 Nm (16 ± 1 lbf-ft) |

6. Reinstall remaining removed parts.

**NOTE:** Ensure to reinstall wiring harness as noted prior to removal.

7. Refill and bleed the cooling system, refer to *Cooling System - Vehicle Components* subsection.

### *Thermostat*

### *Thermostat Location*

The thermostat is located on engine MAG side.

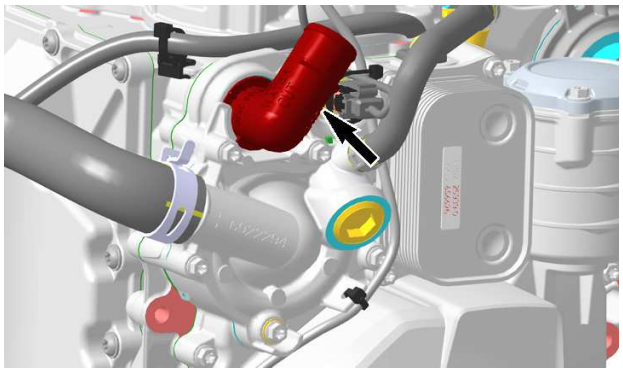

*THERMOSTAT HOUSING*

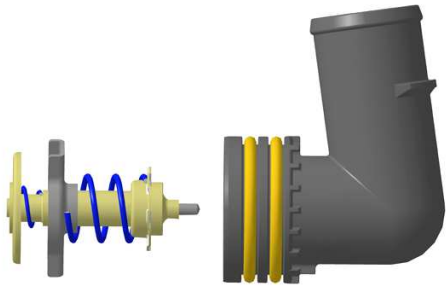

### *Removing the Thermostat*

1. Remove the water pump housing. Refer to procedure in this subsection.
2. Remove thermostat housing then thermostat.

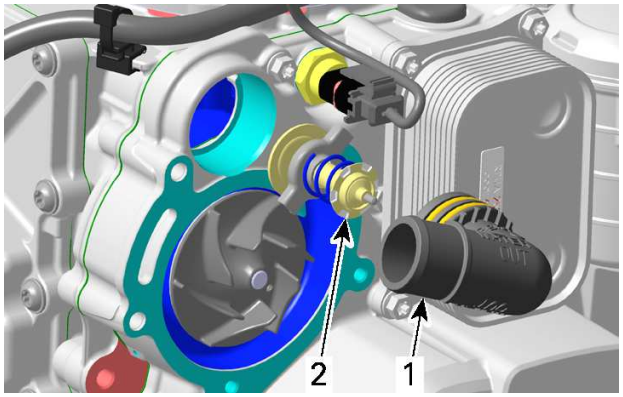


*1. Thermostat housing*
*2. Thermostat*

**NOTE:** Use shop rags to catch any spilled engine coolant.

### *Testing the Thermostat*

1. Put the thermostat in water and heat the water.

| Thermostat Temperature | |
|---|---|
| Starts to open | 75 °C (167 °F) |
| Fully open | 95 °C (203 °F) |

2. Replace thermostat if out of specification.

### *Installing the Thermostat*

1. The installation is the reverse of the removal procedure. However pay attention to the following.
2. Install **NEW** O-rings on thermostat housing.
3. Lubricate O-rings.

| Dow Corning 111 |
|---|

4. Insert thermostat in thermostat housing.

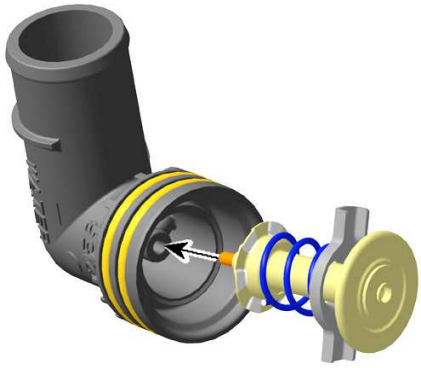

5. Align both tabs of thermostat with the recess in the magneto cover.

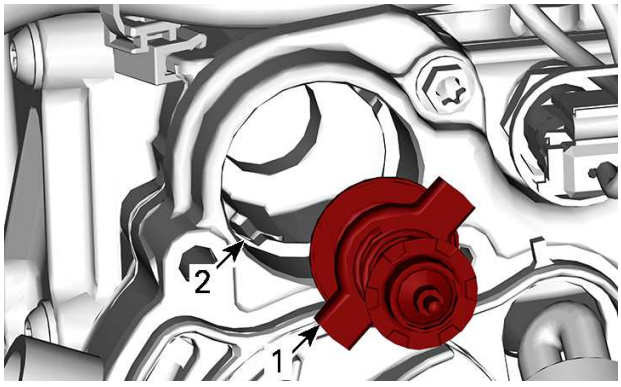


1. *Thermostat tabs*
2. *Magneto cover recess*

6. Install water pump housing, refer to *Installing the Water Pump Housing* in this subsection.
7. Refill and bleed cooling system. Refer to *Maintenance* in *Cooling System - Vehicle Components* subsection.

### *Water Pump*

### *Water Pump Location*

The water pump is located on engine MAG side.

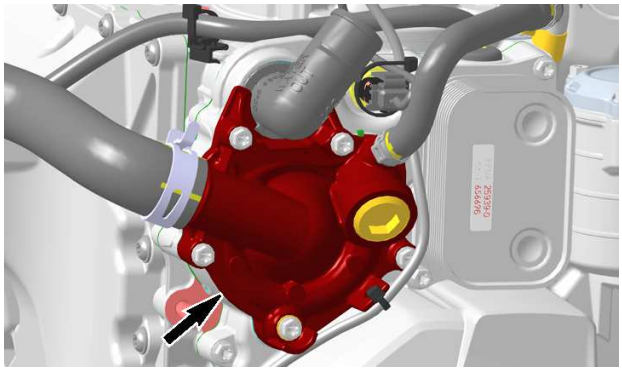

### *Removing the Water Pump Housing*

Any work on the water pump requires the engine removal. Only the housing may be removed with the engine in place.

1. Refer to the appropriate subsection to remove:
   - Muffler
   - Driven pulley and countershaft
   - LH side hull
   - Reverse handle and its support (if equipped).
2. Drain engine coolant. Refer to *Cooling System - Vehicle Components* subsection.
3. Disconnect outlet hose from thermostat housing.
4. Disconnect supercharger cooling hose from water pump.
5. Cut locking tie securing the stator cable harness to the inlet hose.
6. Disconnect inlet hose from water pump.

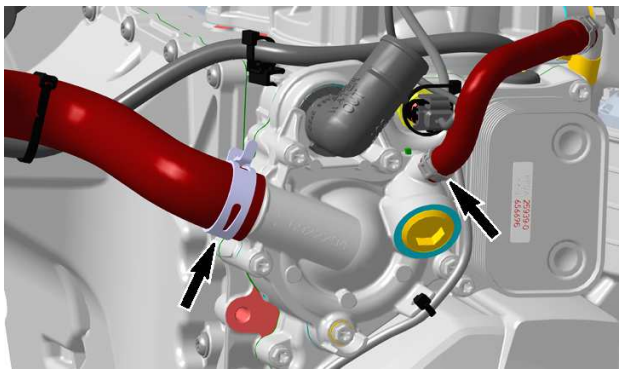

7. Cut locking ties securing the CPS and CTS wire.

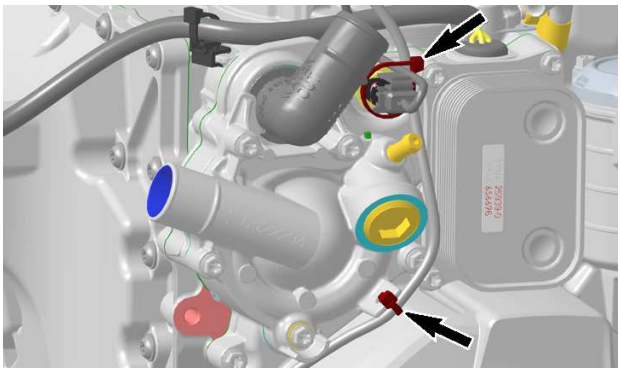

8. Remove the following fasteners.

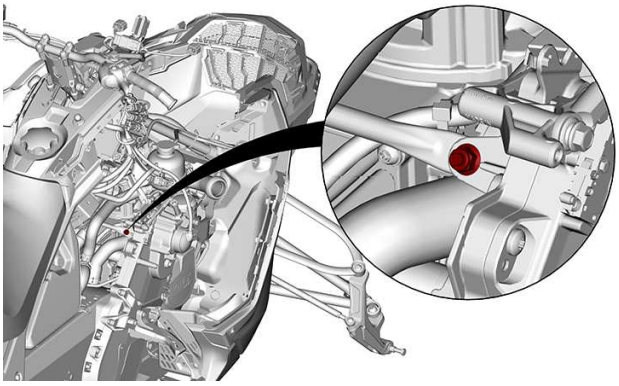

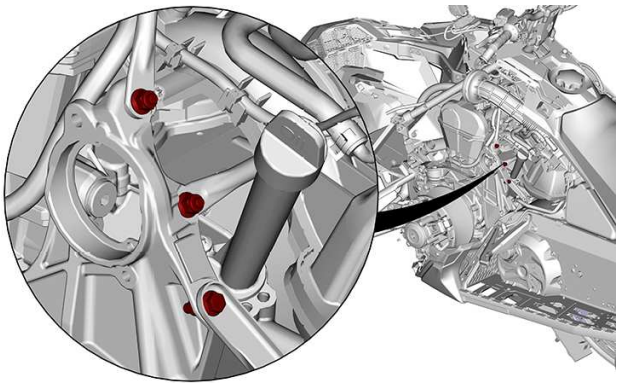

9. Support the engine on the pulley side and remove the following fasteners.

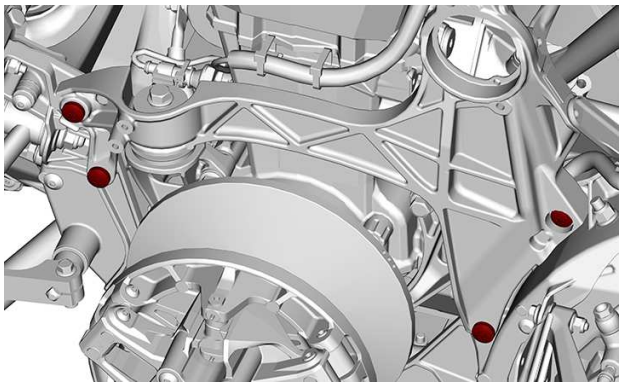

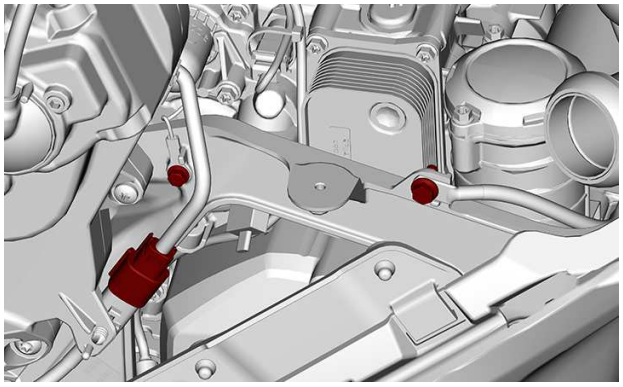

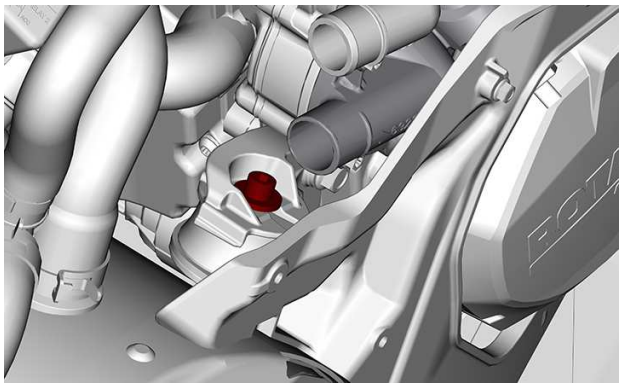

***CHAINCASE REMOVED FOR CLARITY***

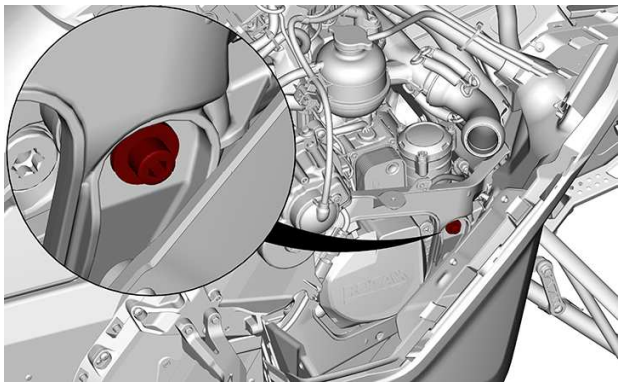

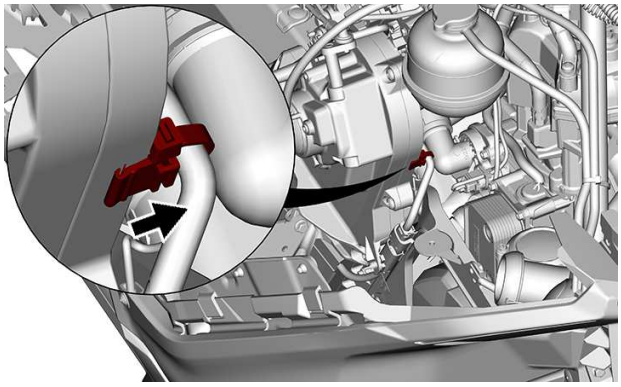

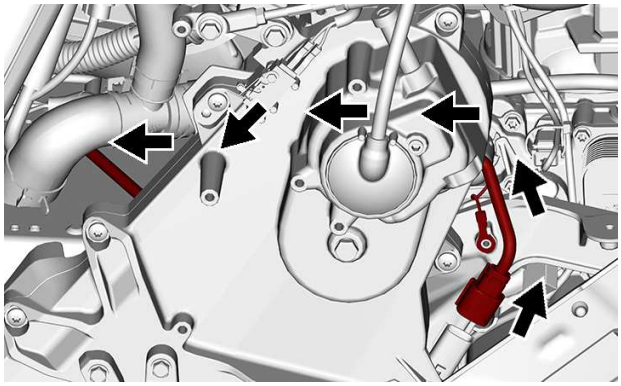

10. Pull on the drive pulley to make room for water pump screws access.

**NOTICE**

**Make sure the waste gate and the oil return hose clear the frame at all time.**

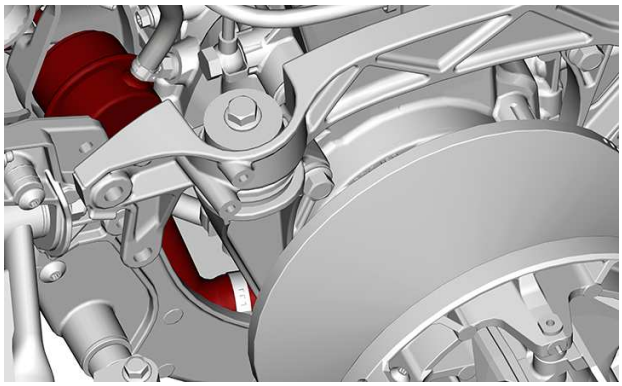

11. Place a pry bar between the engine support and the engine rubber mount, and lift the engine to insert a shim between the frame and the magneto cover

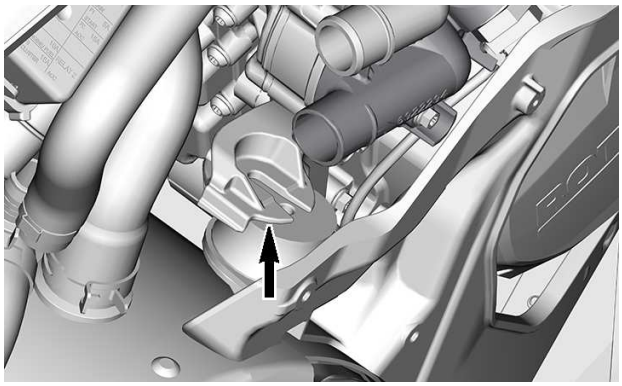

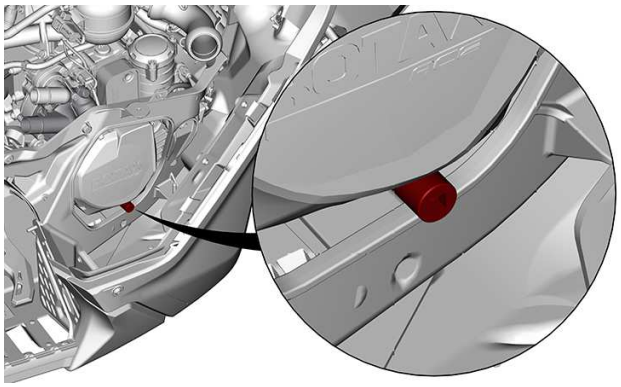

*12 MM (1/2 IN) SHIM*

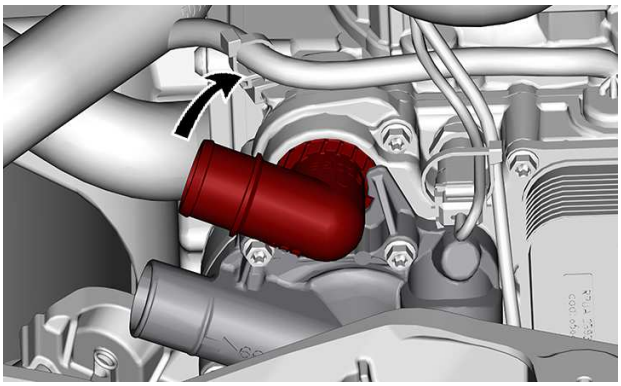

12. Using a compact ratchet wrench and a Torx bit, remove the water pump housing screws.

**NOTE:** Use shop rags to catch any spilled engine coolant.

### *Disassembling the Water Pump*

1. Unscrew impeller counterclockwise using appropriate pliers.

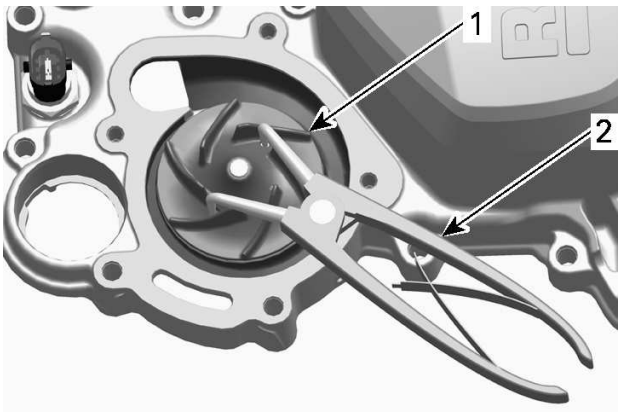


*1. Impeller*
*2. Pliers*

2. Remove magneto cover. Refer to *Magneto And Starter - GEN2* subsection.
3. Remove the following components from magneto cover:
   - Water pump gear
   - Needle pin
   - Thrust washer.

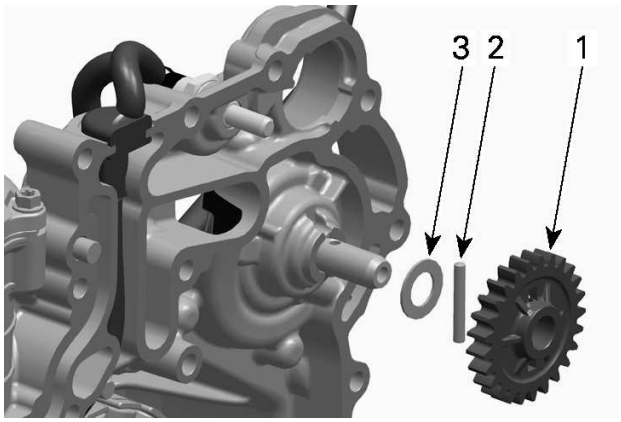


*1. Water pump gear*
*2. Needle pin*
*3. Thrust washer*

4. Remove water pump shaft using a plastic mallet.

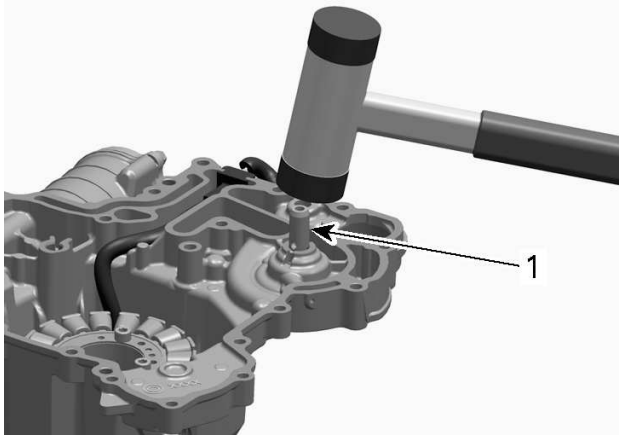


*1. Water pump shaft*

5. Remove the following components from magneto cover:
   - Oil seal
   - Remaining parts of rotary seal.



**NOTICE**

**Be careful not to damage the surface of the rotary seal bore in the magneto cover.**

6. Separate rotary seal from water pump shaft.

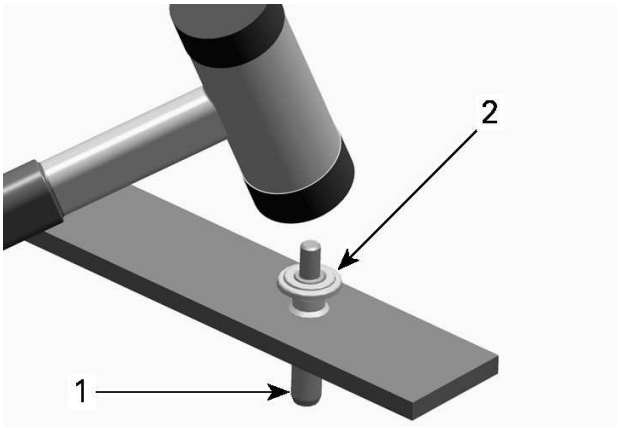


1. *Water pump shaft.*
2. *Rotary seal*

### *Inspecting the Water Pump*

1. Check area of water pump housing for cracks or other visible damage.
2. Check water pump gear for wear or broken teeth.
3. Check if housing gasket is brittle, hard or damaged.
4. Check water pump shaft for visible damage.
5. Replace parts if necessary.

### *Assembling the Water Pump*

**NOTE:** Always replace oil seal and rotary seal at the same time.

1. Clean rotary seal surface from old sealant.

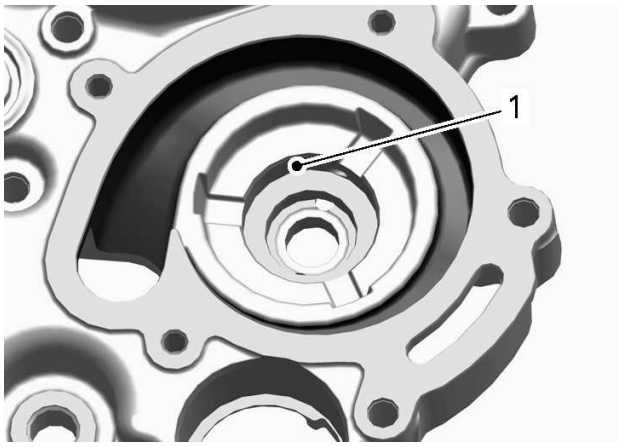


1. *Clean surface*

2. Apply engine oil on press fit area of oil seal.

**NOTICE**

**Never use engine oil on the press fit area of the rotary seal.**

3. Install **NEW** oil seal in magneto cover.

| | |
|---|---|
| **Oil seal pusher (P/N 529036210)** |  |
| **Handle (P/N 420877650)** |  |

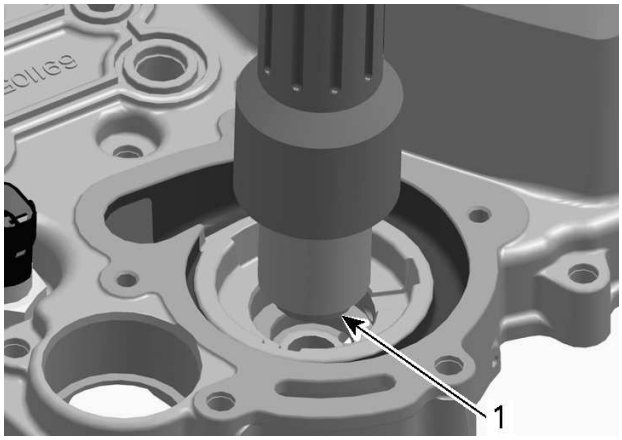


1. *Oil seal*

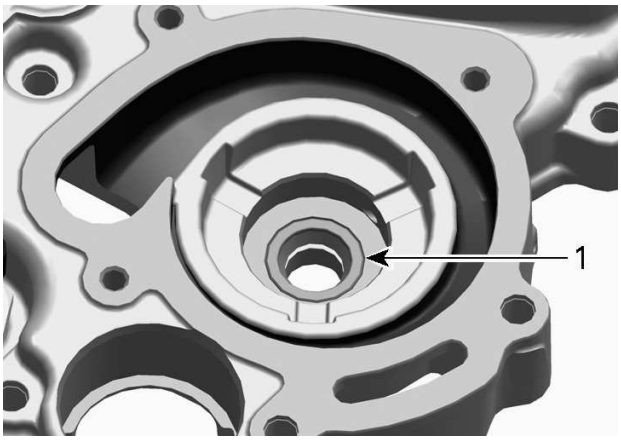


*1. Oil seal correctly installed*

4. Install **NEW** rotary seal on magneto cover using a press.

| **Rotary seal installer (P/N 529036211)** |  |
|---|---|

**NOTE:** Prior to installing, ensure that sealing lip of rotary seal is not damaged.

**NOTICE**

**Never use a hammer for rotary seal installation. Only use a press to avoid damaging the ceramic component.**

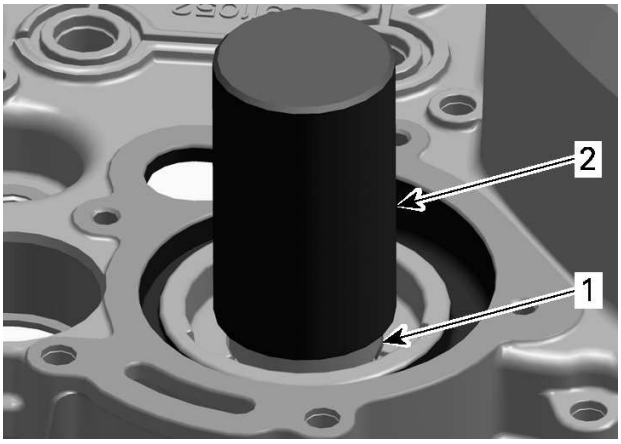


*1. Rotary seal*
*2. Rotary seal installer*

5. Assemble the following components onto water pump shaft.
   - Needle pin
   - Thrust washer.

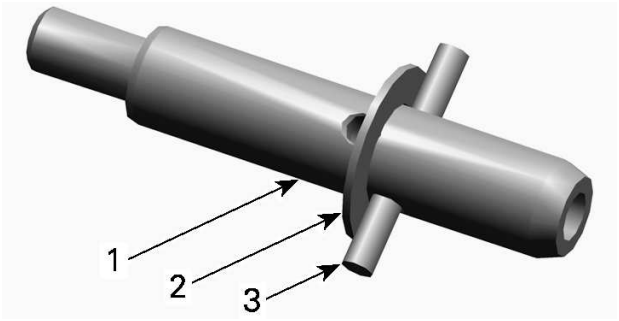


*1. Water pump shaft*
*2. Thrust washer*
*3. Needle pin*

6. Slide water pump shaft into rotary seal using a press.

**NOTE:** To avoid damaging the rotary seal and to achieve the proper preload support the rotary seal with the rotary seal installer.

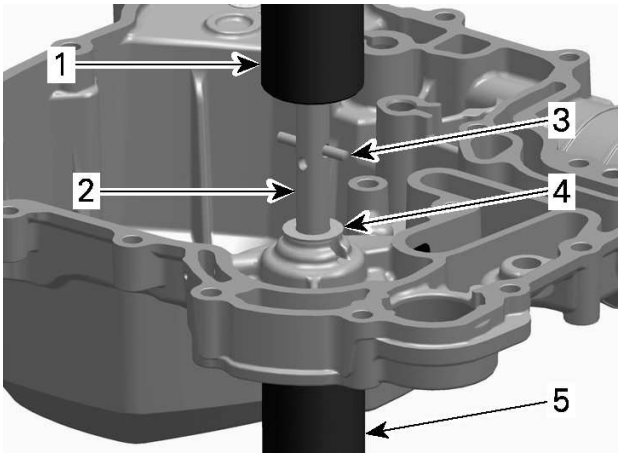


*1. Press*
*2. Water pump shaft*
*3. Needle pin*
*4. Thrust washer*
*5. Rotary seal installer*

7. Carefully press water pump shaft until needle pin touches thrust washer.

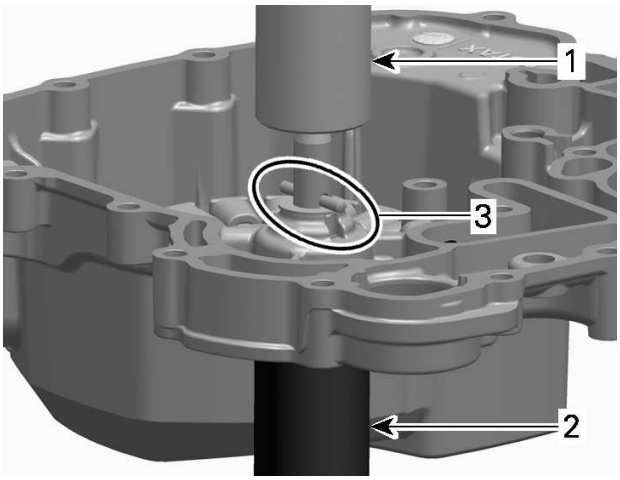


1. *Press*
2. *Rotary seal installer*
3. *Needle pin touches thrust washer*

| NOTICE |
| --- |
| **Never use a hammer to install water pump shaft into rotary seal.** |

**NOTE:** After installation, water pump shaft must rotate freely.

8. Screw impeller clockwise using appropriate pliers.

| NOTICE |
| --- |
| **Be careful not to damage impeller vanes during its installation.** |

9. Install magneto cover. Refer to *Magneto And Starter - GEN2* subsection.

### *Installing the Water Pump Housing*

The installation is the reverse of the removal procedure. However, pay attention to the following:

| NOTICE |
| --- |
| **When installing the water pump housing, ensure the NEW gasket is precisely positioned in the pump housing groove to prevent leakage.** |

1. Install a **NEW** sealing washer on drain screw.
2. Tighten water pump housing retaining screws to specification as per the following procedure.

| Tightening Torque | |
| --- | --- |
| Water pump housing retaining screws | 9 ± 1 Nm (80 ± 9 lbf-in) |

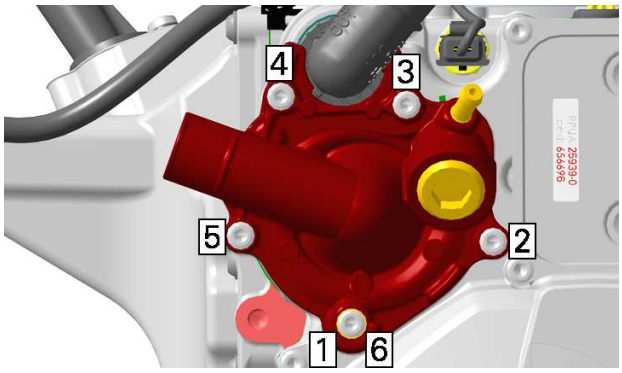


*TIGHTENING SEQUENCE*

3. Turn thermostat housing to proper position.

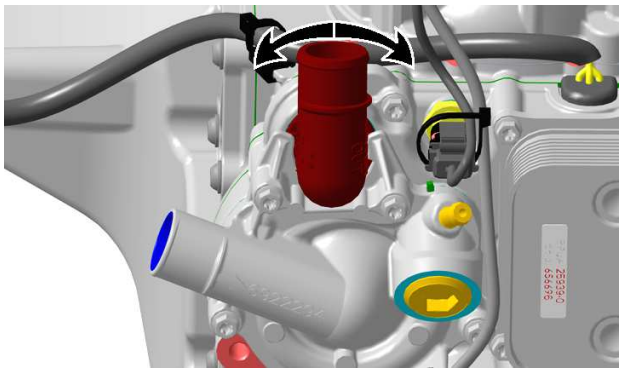

4. Install hose on thermostat housing with a **NEW** Oetiker clamp.
5. Install remaining parts. Refer to their applicable subsection.

### *Water Pump Drive Gear*

### *Water Pump Drive Gear Location*

The water pump drive gear is located behind the magneto cover.

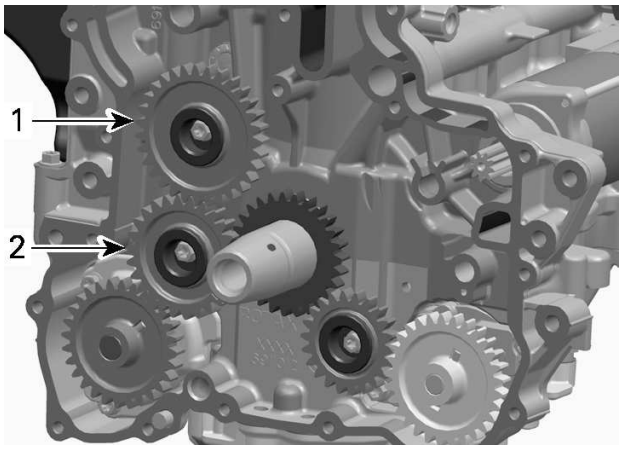


1. *Water pump drive gear 31 T*
2. *Intermediate gear, refer to LUBRICATION system - GEN2*

### *Removing the Water Pump Drive Gear*

1. Remove engine from vehicle. Refer to *Engine Removal and Installation* subsection.
2. Refer to *Magneto And Starter - GEN2* subsection and remove:
   - Magneto cover
   - Magneto flywheel.
3. Remove screw securing water pump drive gear.
4. Remove bearing sleeve.
5. Slide off water pump drive gear.

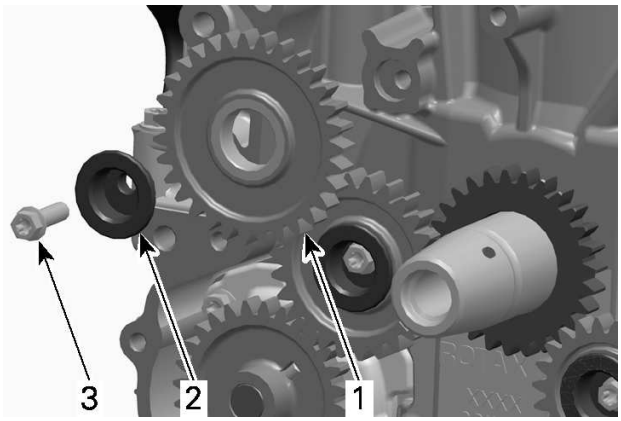


*1. Water pump drive gear 31 T*
*2. Bearing sleeve*
*3. M6 x 20 screw*

### *Inspecting the Water Pump Drive Gear*

Inspect gear for wear or other damage.

Replace gear if necessary.

### *Installing the Water Pump Drive Gear*

The installation is the reverse of the removal procedure. However, pay attention to the following:

1. Apply engine oil on bearing sleeve.
2. Tighten water pump drive gear to specification.

| **Tightening Torque** | |
|---|---|
| Water pump drive gear retaining screw | 9 ± 1 Nm (80 ± 9 lbf-in) |

# Magneto and Starter – GEN1



## SERVICE TOOLS

| Description | Part Number | Page |
|---|---|---|
| CRANKSHAFT PROTECTOR | (P/N 529036213) | 126 |
| ECM ADAPTER TOOL | (P/N 529036166) | 120 |
| FLUKE 115 MULTIMETER | (P/N 529035868) | 120, 123–124, 129 |
| FLYWHEEL PULLER | (P/N 420976235) | 126 |

## SERVICE PRODUCTS

| Description | Part Number | Page |
|---|---|---|
| BRAKE AND PARTS CLEANER PRO S2 | | 128 |
| CLUTCH AND PULLEY FLANGE CLEANER PRO S1 | | 126 |
| KLÜEBER PASTE 46 MR 401 | | 130 |
| LOCTITE 243 (BLUE) | | 125, 127 |
| LOCTITE 648 (GREEN) | | 128 |
| LOCTITE CHISEL (GASKET REMOVER) | | 122 |
| SYNTHETIC GREASE | | 121 |

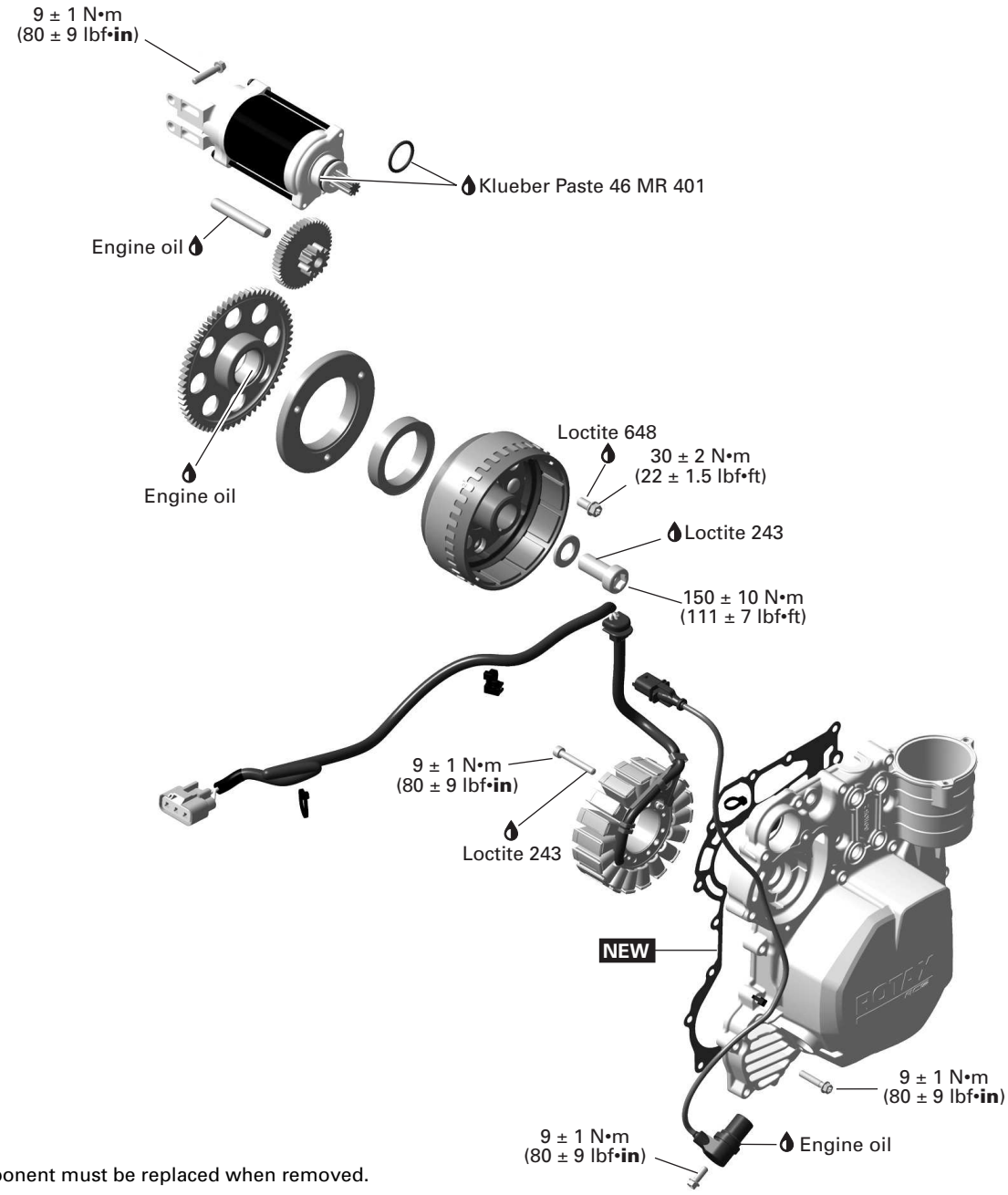


**NEW** = Component must be replaced when removed.

## General

This section refers to the following ECM:

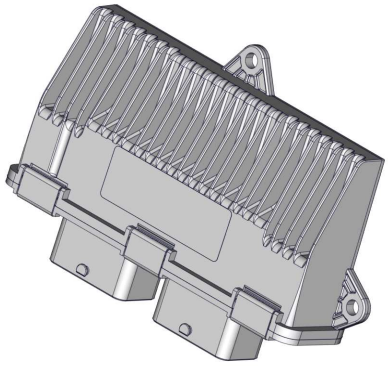

*ECM GEN1 – ME17*

**NOTICE**

**Always disconnect BLACK (-) cable first and reconnect last.**

During assembly/ installation, use the torque values and service products as in the exploded view.

Clean threads before applying a threadlocker. Refer to self-locking fasteners and Loctite application in *Introduction* subsection.

**⚠ WARNING**

**Torque wrench tightening specifications must strictly be adhered to.**
**Locking devices when removed (ex: locking tabs, cotter pin, etc.) must be replaced.**

**NOTICE**

**Hoses, cables or locking ties removed during a procedure must be reinstalled as per factory standards.**

## Troubleshooting

Always check for fault codes. If a fault code is detected, service the fault code first. Refer to *Diagnostic and Fault Codes* subsection.

### *Troubleshooting*

**1. Engine Does Not Crank**

Battery voltage too low.

– *Check battery condition.*

Starter is turning but engine does not crank.

– *Check sprag clutch for wear or other damages.*

Starter is defective.

– *Check starter condition. Perform Testing the Starter Operation and Testing the Starter Voltage Drop.*

Engine is only cranking 1 - 2 seconds before it stops.

– *Check battery condition.*

## Procedures

### *Crankshaft Position Sensor (CPS)*

### *CPS TROUBLESHOOTING*

When troubleshooting a CPS fault, take into account that a CPS fault can be triggered by bent or missing encoder wheel teeth.

Push START/STOP button and crank engine. If engine does not start within 15 seconds check for fault codes using the BRP diagnostic software (BUDS2).

### *CPS and CPS Connector Location*

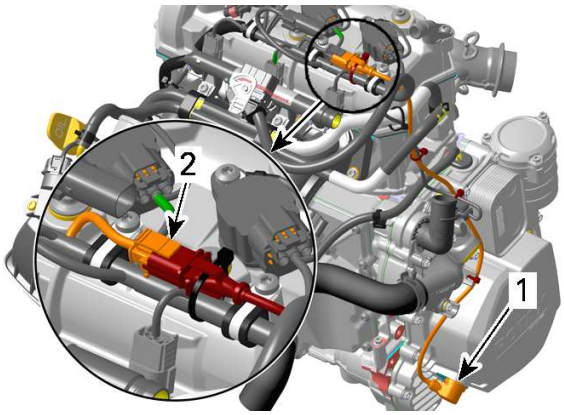


1. *CPS location*
2. *CPS connector location*

### *Testing the CPS Resistance*

1. Cut locking tie and disconnect the CPS connector.

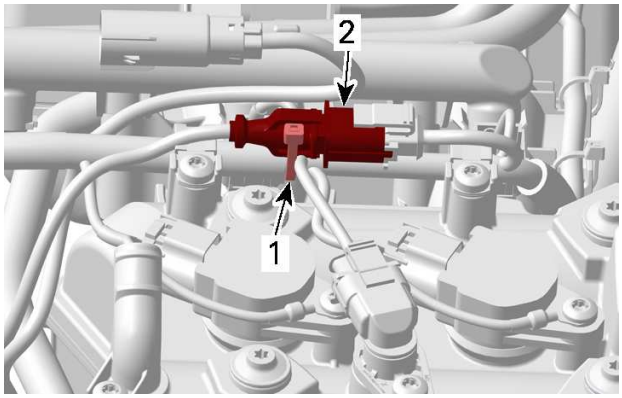


***TYPICAL***
1. *Locking tie*
2. *CPS connector*

2. Probe CPS connector terminals as per the following table.

| Fluke 115 multimeter (P/N 529035868) |  |
|---|---|

| CPS Resistance Test | | |
|---|---|---|
| CPS Pin | | Specification @ 20°C (68°F) |
| 1 | 2 | 775 to 950 Ω |

3. If resistance is not within specification, replace CPS. Refer to *Replacing the CPS* in this subsection.
4. If resistance tests good, reconnect the CPS connector and disconnect the ECM-13 connector from the ECM.
5. Install the ECM-13 connector on the ECM adapter.

| ECM adapter tool (P/N 529036166) |  |
|---|---|

6. Using a multimeter, recheck resistance as per the following table.

| CPS Resistance Test at ECM Connector | | |
|---|---|---|
| ECM Adapter Pin | | Specification @ 20°C (68°F) |
| 13 | 14 | 775 to 950 Ω |

7. If resistance is not within specification, replace the CPS. Refer to *Replacing the CPS* in this subsection.
8. If resistance tests good, reconnect the ECM-13 connector to the ECM and refer to *Testing the CPS Output Voltage.*.

### *Testing the CPS Output Voltage*

1. Remove the CPS fuse. Refer to the wiring diagram.
2. Cut locking tie and disconnect the CPS connector.

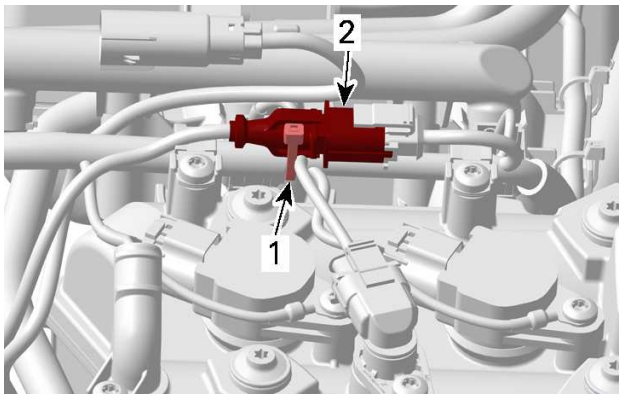


***TYPICAL***
*1. Locking tie*
*2. CPS connector*

3. Probe CPS connector terminals while cranking engine as per following table.

| Fluke 115 multimeter (P/N 529035868) |  |
|---|---|

| CPS Output Voltage Test | | |
|---|---|---|
| CPS Pin | | Specification |
| 1 | 2 | 1 - 2 Vac min. |

4. If voltage is out of specification, inspect wiring/connectors. Replace CPS if wiring is good.
5. If voltage is within specification, the problem may be related to the ECM.
6. Reconnect CPS connector and install all removed parts.

### *Replacing the CPS*

1. Remove parts required to access the CPS.
2. Take note of factory CPS wire harness routing for reinstallation.
3. Cut harness locking ties and disconnect CPS connector.

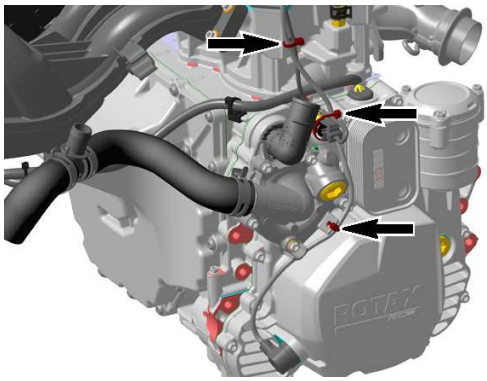

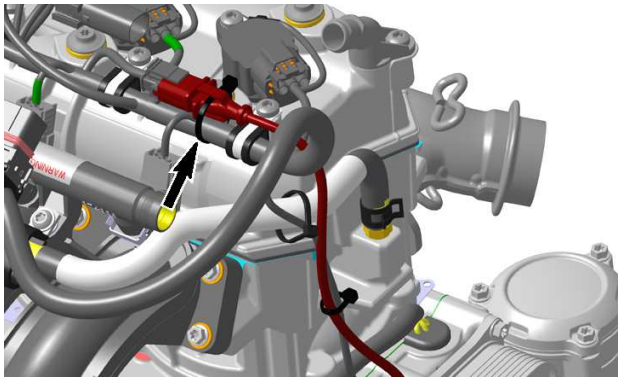

4. Remove CPS retaining screw and pull on CPS to remove it.

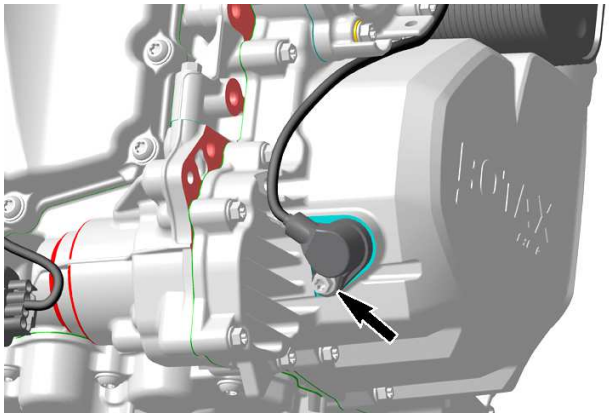

5. Lubricate O-ring of CPS.

| Synthetic grease |
|---|

6. Install new CPS.

| Tightening Torque | |
|---|---|
| CPS retaining screw | 9 ± 1 Nm<br>(80 ± 9 lbf-in) |

7. Route and secure CPS harness using harness clamp and locking ties as noted prior to removal.

### *Magneto Cover*

#### *Removing the Magneto Cover*

1. Remove the engine. Refer to *Engine Removal and Installation*.
2. Cut locking ties securing the stator cable harness.

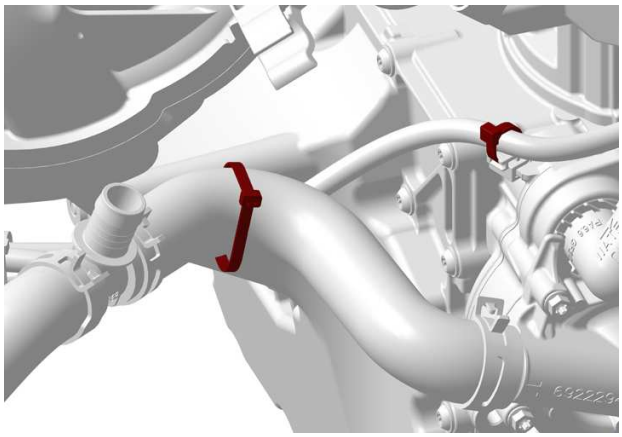

*TYPICAL*

3. Disconnect stator connector from voltage regulator. Refer to *Stator* in this subsection.
4. Refer to *Lubrication System - GEN1* and drain engine oil.
5. Refer to *Cooling System - GEN1* and remove:
   - Water pump housing
   - Thermostat housing.
6. Refer to *Lubrication System - GEN1* subsection and remove:
   - Oil pressure regulator
   - Oil cooler.
7. Remove the CPS.




*1. CPS*

8. Remove magneto cover retaining screws.

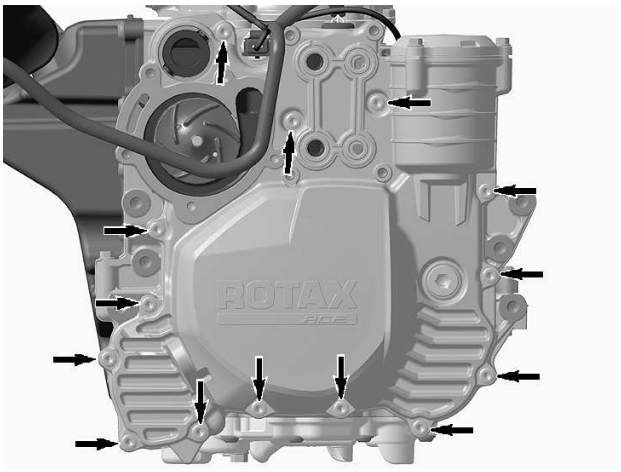

*MAGNETO COVER SCREWS*

9. Place an oil pan under magneto area to catch remaining oil.
10. Pull magneto cover off.
11. Discard the magneto cover gasket.

### *Inspecting the Magneto Cover*

Check magneto cover for cracks or other damage. Replace if necessary.

### *Installing the Magneto Cover*

1. Clean magneto cover.

| **Loctite chisel (gasket remover)** |
|---|

2. Install a **NEW** magneto cover gasket.
3. Ensure starter drive gear pin is in place.
4. Apply engine oil on starter drive gear pin.

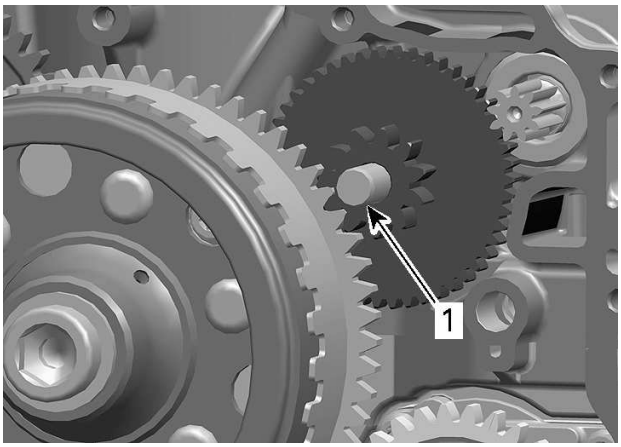


***APPLY ENGINE OIL***
*1. Starter drive gear pin*

5. Apply engine oil on water pump shaft.

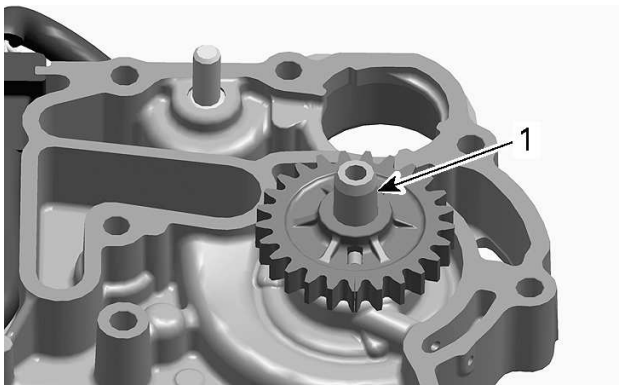


*1. Water pump shaft - apply engine oil*

| **NOTICE** |
|---|
| **Make sure the stator cable harness is embedded in the cover channel provided. The part of the harness that is out of the channel must be tight, otherwise it might chafe or jam.** |

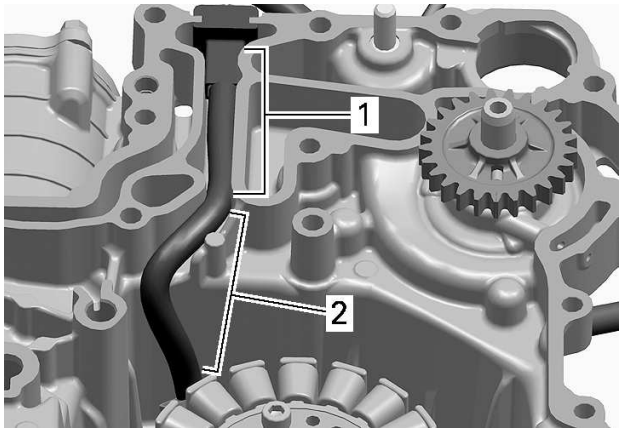


*1. Embedded in that area*
*2. Tight in this area*

6. Carefully install magneto cover.

| **⚠ CAUTION** |
|---|
| **Magnetic force between magneto flywheel and stator is very high. Avoid finger contusions.** |

7. Tighten magneto cover screws according to the following sequence.

| **Tightening Torque** | |
|---|---|
| Magneto cover screws | 9 ± 1 Nm<br>(80 ± 9 lbf-in) |

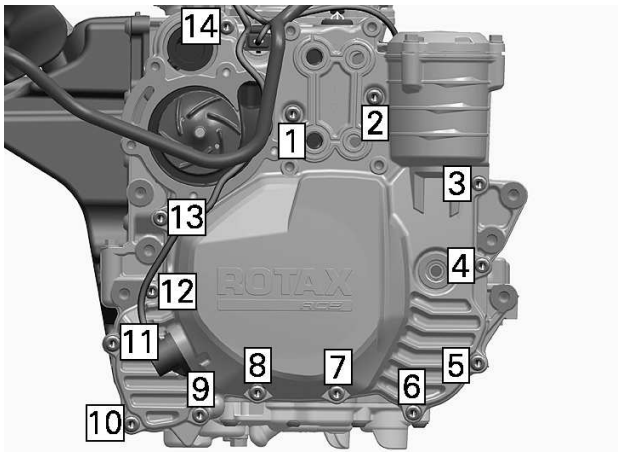


*TIGHTENING SEQUENCE*

8. Make a loop at the stator cable and fix the loop with a locking tie as specified (A).
9. Secure stator cable harness with a locking tie to the mount at the cylinder block as specified (B).

**NOTE:** Check that the total length of the stator cable harness between the locking tie at the mount and the stator connector is within specification (C).

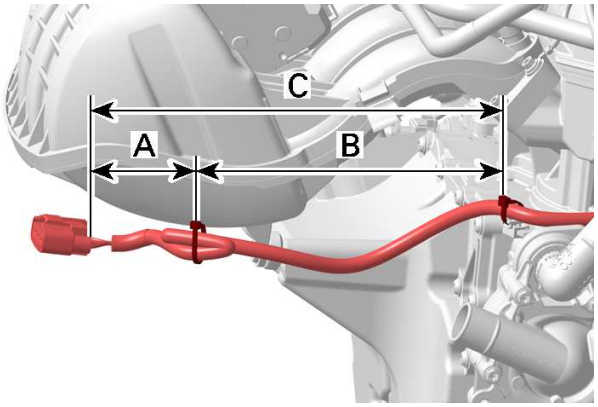


*TYPICAL*
*A. 115 mm (4.53 in)*
*B. 200 mm (7.87 in)*
*C. 315 ± 5 mm (12.4 ± .2 in)*

10. Secure stator cable harness with a locking tie at the radius of the inlet hose.

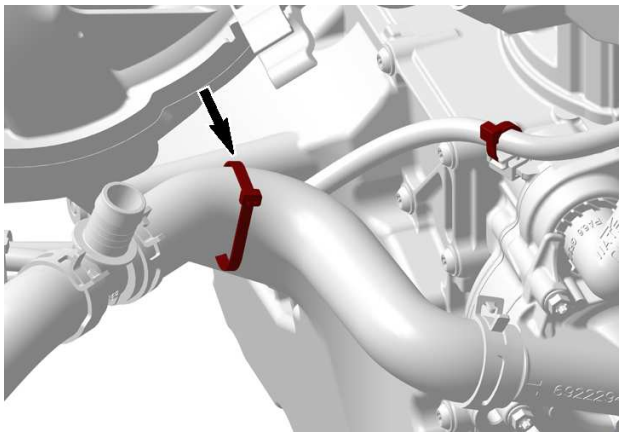

*TYPICAL*

11. Install all other removed parts.

### *Stator*

### *Stator Connector Location*

1. Move fuel tank backward to reach the stator connector. Refer to *Moving Fuel Tank Rearward for Servicing* in *Fuel Tank and Fuel Pump* subsection.

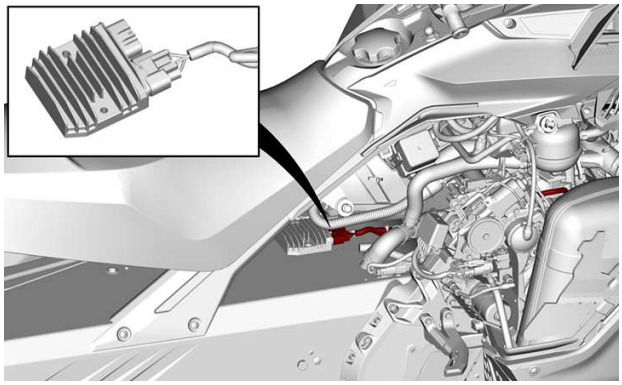

*TYPICAL - FUEL TANK REMOVED FOR CLARITY*

### *Testing the Stator Continuity*

1. Disconnect the stator connector from voltage regulator, refer to *Stator Connector Location* in this subsection.
2. Set multimeter to Ω.

| | |
|---|---|
| **Fluke 115 multimeter (P/N 529035868)** |  |

3. Probe each pair of YELLOW wires by touching (NOT inserting) terminals lock tabs as shown.

**NOTICE**

**Never insert a multimeter probe into a terminal as it would ruin the terminal.**



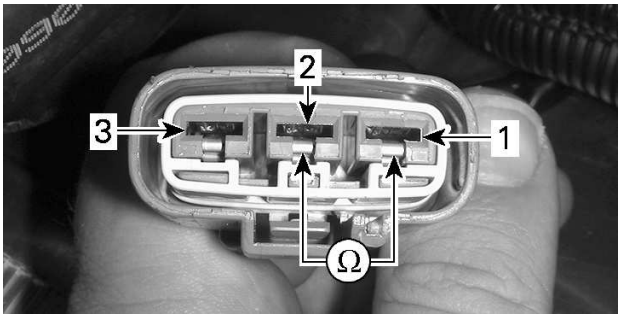


1. *Pin #1*
2. *Pin #2*
3. *Pin #3*

4. Read resistance as per following table.

| Stator Continuity Test | | |
|---|---|---|
| **Stator Connector Pin** | | **Specification @20 °C (68 °F)** |
| 1 | 2 | 0.1 - 1 Ω |
| 1 | 3 | |
| 2 | 3 | |

5. If any resistance reading is not as specified, the stator or the wiring (including connector) is open and needs to be repaired or replaced.
6. If resistance is good, perform the stator insulation test.

### *Testing the Stator Insulation*

1. Connect multimeter between any YELLOW wire and chassis ground.

| | |
|---|---|
| **Fluke 115 multimeter (P/N 529035868)** |  |

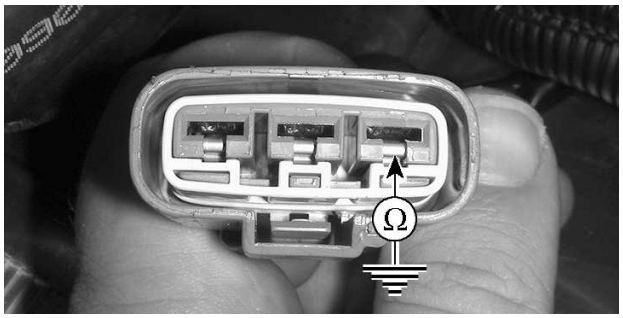


2. Read resistance.

| Stator Insulation Test | | |
|---|---|---|
| **Stator Connector Pin** | **Frame** | **Specification @20 °C (68 °F)** |
| 1,2 or 3 | Ground | Infinity (OL) |

3. If any resistance reading is not as specified, the stator or the wiring is shorted to ground and needs to be repaired or replaced.
4. If the insulation test is good, perform the output voltage test.

### *Testing the Stator Output Voltage*

1. Start engine and let it reach its operating temperature.
2. Set multimeter to Vac scale.

| | |
|---|---|
| **Fluke 115 multimeter (P/N 529035868)** |  |

3. With engine idling, connect multimeter between each pair of YELLOW wires.

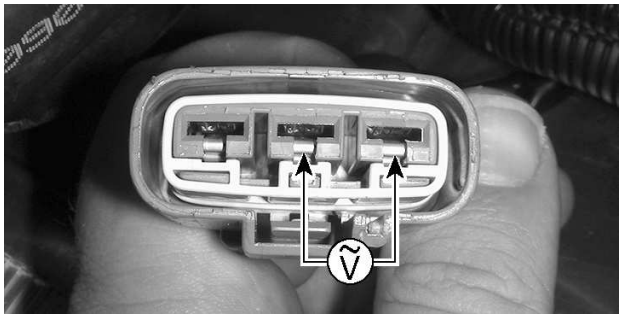


4. Read voltage.

| Stator Output Voltage Test | | | |
|---|---|---|---|
| **Test Engine Speed** | **Stator Connector Pin** | | **Specification** |
| Idle speed | 1 | 2 | ± 25 Vac |
| | 1 | 3 | |
| | 2 | 3 | |

5. If any voltage reading is significantly lower than specification, replace the stator.

### *Removing the Stator*

1. Remove the *Magneto Cover*, see procedure in this subsection.
2. Remove stator retaining screws.

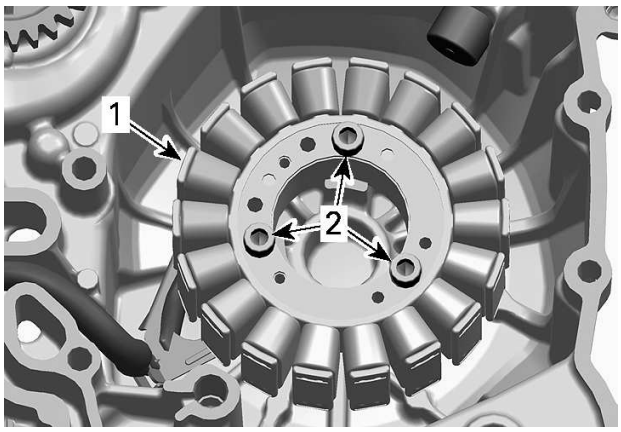


*1. Stator*
*2. Stator retaining screws*

3. Remove stator.

### *Inspecting the Stator*

Check stator windings and insulation for cracks and other damages. If damaged replace it.

Check if stator wires are brittle, hard or otherwise damaged.

### *Installing the Stator*

1. Ensure stator cable is underneath cable holder during installation of stator.

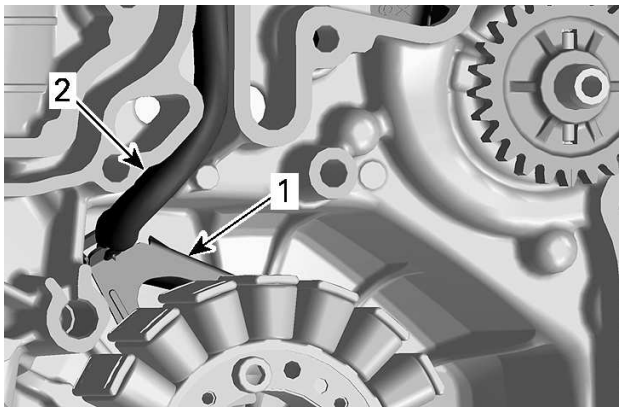


*1. Cable holder*
*2. Stator cable*

2. Install stator retaining screws and tighten to specified torque.

| **Loctite 243 (blue)** |
|---|

| Tightening Torque | |
|---|---|
| Stator retaining screws | 9 ± 1 Nm<br>(80 ± 9 lbf-in) |

3. Reinstall *Magneto Cover*, see procedure in this subsection.

### *Rotor*

### *Removing the Rotor*

1. Remove the magneto cover. Refer to *Magneto Cover* in this subsection.
2. Lock crankshaft. Refer to *Cylinder Block - GEN1* subsection.
3. Remove rotor retaining screw and lock washer.

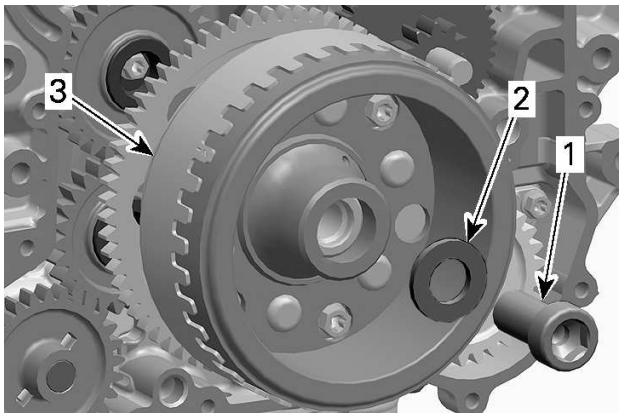


*1. Retaining screw*
*2. Lock washer*
*3. Rotor*

4. Remove the rotor.

| | |
|---|---|
| **Crankshaft protector (P/N 529036213)** |  |
| **Flywheel puller (P/N 420976235)** |  |

**NOTE:** Apply some grease on the crankshaft protector surface to ease puller operation.

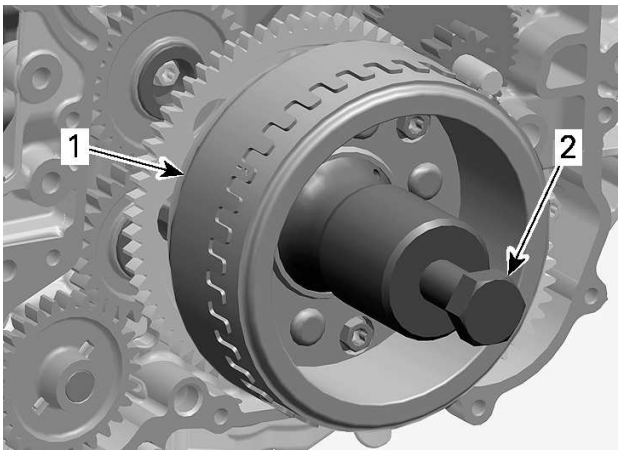


1. *Rotor*
2. *Flywheel puller screw*

### *Inspecting the Rotor*

1. Check the inner side of the rotor for scratches or other damage.
2. Check keyway for wear or damages.
3. Check if trigger wheel teeth are bent or otherwise damaged.

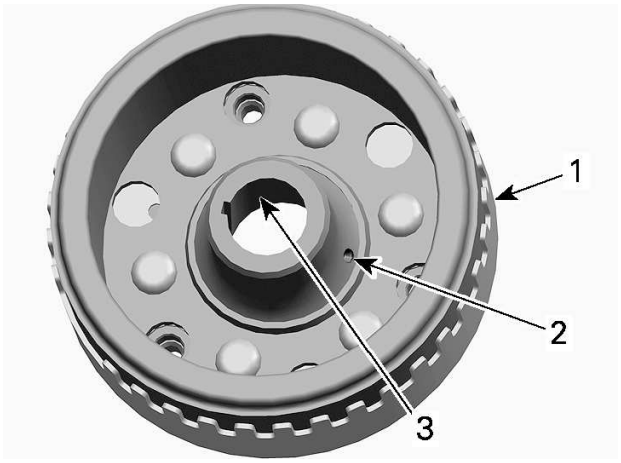


1. *Rotor with trigger wheel*
2. *Oil passage in magneto hub*
3. *Rotor taper*

4. Check woodruff key and keyway on crankshaft for wear or damages.
5. Replace parts as necessary.

### *Installing the Rotor*

The installation is the reverse of the removal procedure. However, pay attention to the following.

1. Blow the oil passage in the magneto hub by using compressed air. Check if it is clogged.
2. Clean:

**Clutch and pulley flange cleaner PRO S1**

- The oil passage
- The crankshaft thread
- The crankshaft taper
- The rotor taper.

**NOTICE**

**Taper on crankshaft and rotor must be free of grease.**

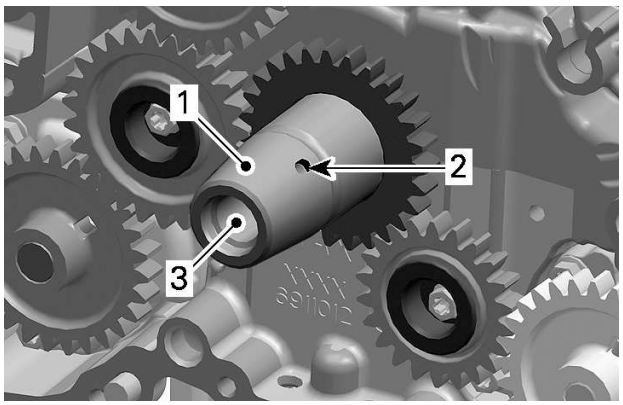


1. *Crankshaft taper*
2. *Oil passage*
3. *Thread*

3. Apply oil on sprag clutch and needle bearing.
4. Install sprag clutch gear onto the rotor.

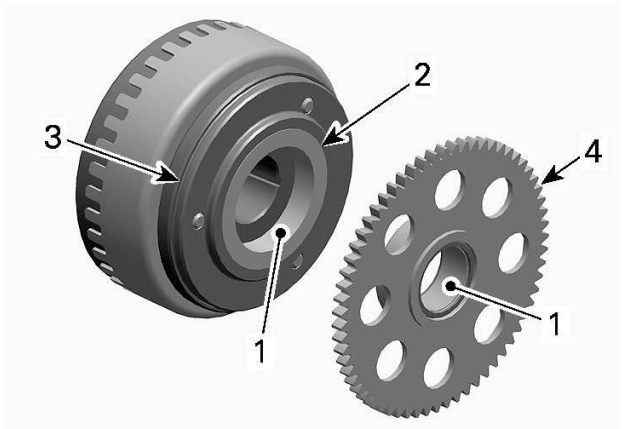


1. *Apply engine oil here*
2. *Sprag clutch*
3. *Sprag clutch housing*
4. *Sprag clutch gear*

5. Slide rotor along with the sprag clutch gear onto the crankshaft. The woodruff key and keyway must be aligned.
6. Rotate sprag clutch gear counterclockwise to align with starter double gear.

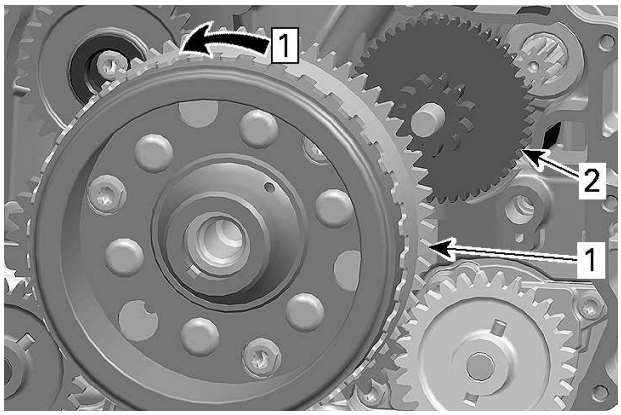


*Step 1. Rotate to align teeth*
*1. Sprag clutch gear*
*2. Starter double gear*

7. Install washer and retaining screw.
8. Tighten to specification.

| Loctite 243 (blue) |
|---|

| Tightening Torque | |
|---|---|
| Rotor retaining screw | 150 ± 10 Nm (111 ± 7 lbf-ft) |

### *Sprag Clutch*

#### *Removing the Sprag Clutch*

1. Remove the magneto cover. Refer to *Magneto Cover* in this subsection.
2. Lock crankshaft. Refer to *Cylinder Block - GEN1* subsection.
3. Loosen and remove sprag clutch housing screws.

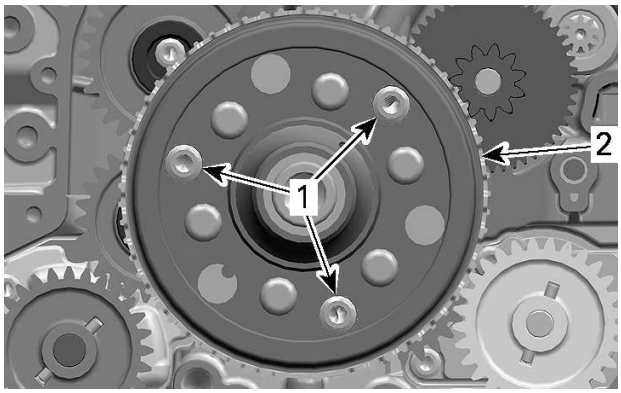


*1. Sprag clutch housing screws*
*2. Rotor*

4. Remove rotor. Refer to *Rotor* in this subsection.
5. Remove sprag clutch housing.
6. Remove sprag clutch from sprag clutch housing.

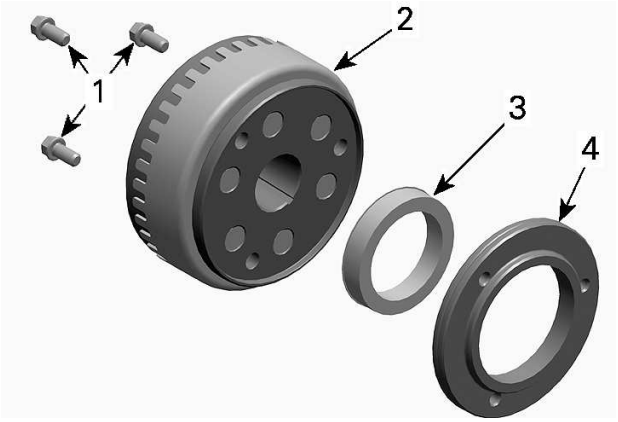


*1. Sprag clutch housing screws*
*2. Rotor*
*3. Sprag clutch*
*4. Sprag clutch housing*

#### *Inspecting the Sprag Clutch*

1. Inspect sprag clutch and sprag clutch housing for wear and damage.
2. Check the collar of the sprag clutch gear Refer to *Sprag Clutch Gear* in this subsection.
3. Rotate sprag clutch gear clockwise. Gear must rotate freely.

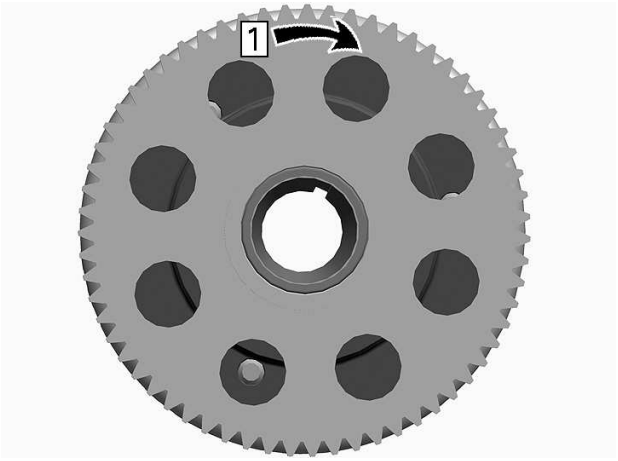


*Step 1. Free*

4. Rotate sprag clutch gear counterclockwise. Gear must lock.

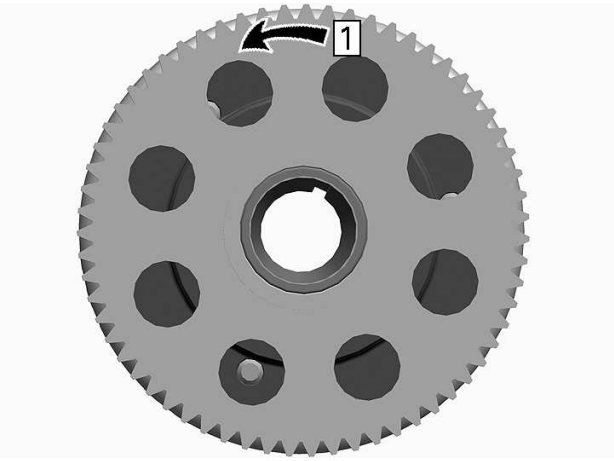


*Step 1. Lock*

### *Installing the Sprag Clutch*

1. Clean sprag clutch housing with a parts cleaner.

| **Brake and parts cleaner PRO S2** |
|---|

**NOTICE**

**Threads of sprag clutch housing must be free of any lubricants.**

2. Apply thread locker on threads of sprag clutch housing screws.

| **Loctite 648 (green)** |
|---|

3. Loosely install screws.
4. Apply engine oil on sprag clutch and sprag clutch gear needle bearing.

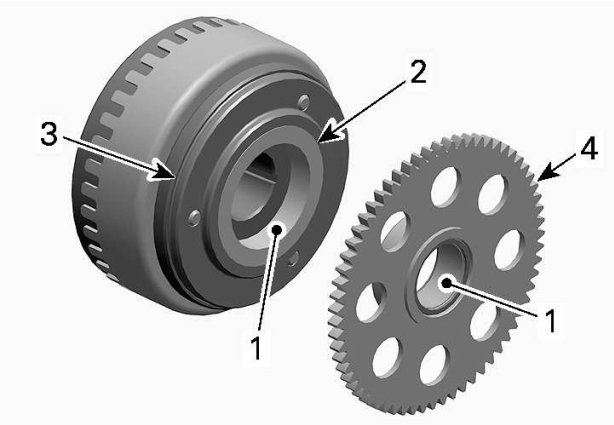


1. *Apply engine oil here*
2. *Sprag clutch*
3. *Sprag clutch housing*
4. *Sprag clutch gear*

5. Install rotor. Refer to *Rotor* in this subsection.
6. Tighten sprag clutch housing screws to specification.

| **Tightening Torque** | |
|---|---|
| Sprag clutch housing screws | 30 ± 2 Nm (22 ± 1 lbf-ft) |

7. Install all other removed parts.

### *Sprag Clutch Gear*

#### *Removing the Sprag Clutch Gear*

1. Remove rotor and sprag clutch gear together. Refer to *Rotor* in this subsection.
2. Pull sprag clutch gear out of the rotor.

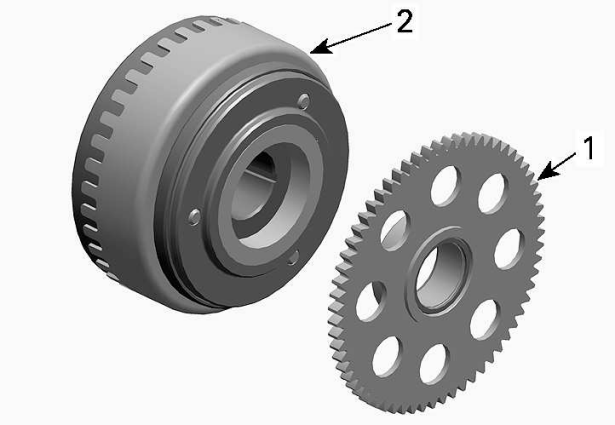


1. *Sprag clutch gear*
2. *Rotor*

#### *Inspecting the Sprag Clutch Gear*

1. Inspect gear, especially teeth and sprag clutch collar for wear and other damage.
2. Check needle bearing for wear and pittings.




1. *Teeth*
2. *Collar*
3. *Needle bearing*

3. Replace sprag clutch gear if necessary.

### *Installing the Sprag Clutch Gear*

The installation is the reverse of the removal procedure. However, pay attention to the following.

**NOTE:** Apply engine oil on needle bearing and collar of sprag clutch gear.

### *Starter Drive Gears*

The starter drive gears are located on the engine MAG side, behind the magneto cover.

### *Removing the Starter Drive Gear*

1. Remove the magneto cover. Refer to *Magneto Cover* in this subsection.
2. Remove location pin and starter double gear.

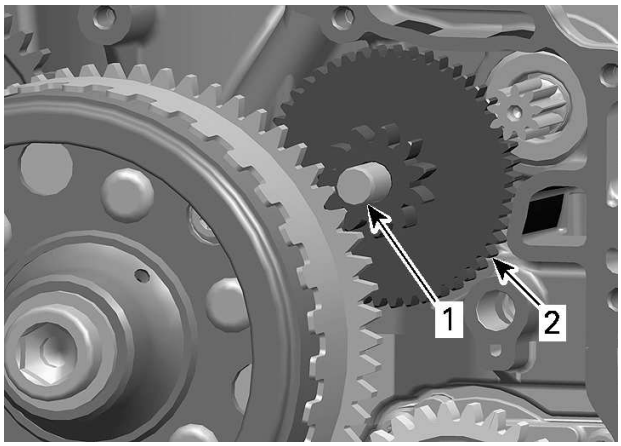


1. *Location pin*
2. *Starter double gear*

### *Inspecting the Starter Drive Gear*

Inspect starter drive gears and location pin for wear and damage.

Replace parts if necessary.

### *Installing the Starter Drive Gear*

The installation is the reverse of the removal procedure. However, pay attention to the following.

Apply engine oil on the location pin.

### *Starter*

### *Testing the Starter Operation*

Before carrying out any starter test, make sure:

– Battery is fully charged and in good condition.
– Cable connections at battery, starter and solenoid are tight.
– Cables are in good condition.

1. Disconnect the negative battery cable.

**⚠ WARNING**

**Sparks can occur when connecting jumper cables. To avoid fire hazard, be sure that no flammable liquids or fuel vapors are in the test area.**

2. Using booster cables and a fully charged battery (or a power pack), carefully supply current directly to the starter.
   1. Connect the negative booster cable or power pack cable to a good ground such as an engine support.
   2. Momentarily touch the starter positive terminal.
3. If starter turns at normal speed, test the starting circuit. Refer to *Starting System* subsection.
4. If starter turns slowly, carry out the *Starter Voltage Drop Test (at Battery)*.
5. If starter does not turn, replace starter.

### *Testing the Starter Voltage Drop (at Battery)*

**NOTE:** This test will confirm if starter draws too much current. Battery must be fully charged and in good condition.

1. Set multimeter to Vdc.

| | |
|---|---|
| **Fluke 115 multimeter (P/N 529035868)** |  |

2. Probe battery posts.
3. Crank engine in drowned mode (accelerator held all the way in).
4. Read voltage while cranking.

**NOTE:** Battery voltage will drop approximately 2 Vdc and fluctuate with starter cranking load.

– If the result is close to battery voltage, the starter is in good condition.
– If the result is below battery voltage (- 2 Vdc and more), the starter may be defective.

### *Removing the Starter*

1. Remove turbo charger (if equipped). Refer to *Turbocharger - GEN1* subsection.
2. Disconnect the battery cables.

**NOTICE**

**Always disconnect the battery BLACK (-) cable first, then the RED (+) cable.**

3. Remove starter cable from starter.
4. Remove starter retaining screws.
5. Remove starter from engine.

### *Installing the Starter*

1. Ensure starter and engine mating surfaces are free of debris.

**NOTICE**

**Serious problems may arise if the starter is not properly aligned.**

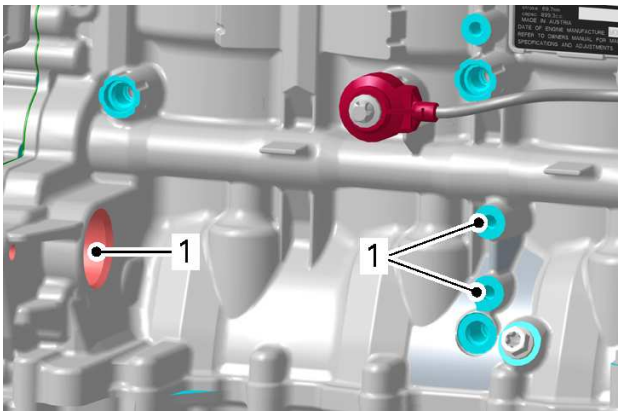


***900 ACE ENGINE SHOWN***
*1. Clean mating surfaces*

2. Lubricate starter boss and starter O-ring before installation.

**Klüeber paste 46 MR 401**

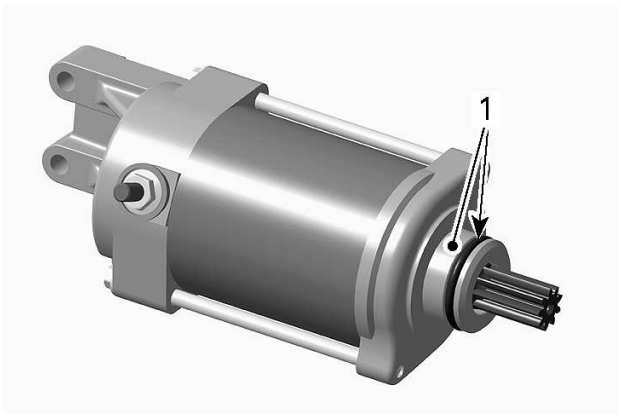


*1. Apply grease here*

3. Insert starter gear into engine.
4. Install starter retaining screws and tighten to the specified torque.

| Tightening Torque | |
|---|---|
| Starter retaining screws M6 | 9 ± 1 Nm (80 ± 9 lbf-in) |

5. Connect starter cable to starter terminal and tighten nut to specification.

| Tightening Torque | |
|---|---|
| Starter cable nut | 7 ± 1 Nm (62 ± 9 lbf-in) |

6. Install all other removed parts.
7. Reconnect the battery cables.

**NOTICE**

**Always connect RED (+) cable first, and BLACK (-) cable last.**

8. Test for proper starter operation.

# Magneto and Starter – GEN2



## SERVICE TOOLS

| Description | Part Number | Page |
|---|---|---|
| CRANKSHAFT PROTECTOR | (P/N 529036213) | 139 |
| ECM ADAPTER TOOL | (P/N 529036166) | 134 |
| FLUKE 115 MULTIMETER | (P/N 529035868) | 133–134, 137–138 |
| FLYWHEEL PULLER | (P/N 420976235) | 139 |

## SERVICE PRODUCTS

| Description | Part Number | Page |
|---|---|---|
| BRAKE AND PARTS CLEANER PRO S2 | | 140–141 |
| KLÜEBER PASTE 46 MR 401 | | 143 |
| LOCTITE 243 (BLUE) | | 139–140 |
| LOCTITE 648 (GREEN) | | 141 |
| LOCTITE CHISEL (GASKET REMOVER) | | 135 |
| SYNTHETIC GREASE | | 135 |

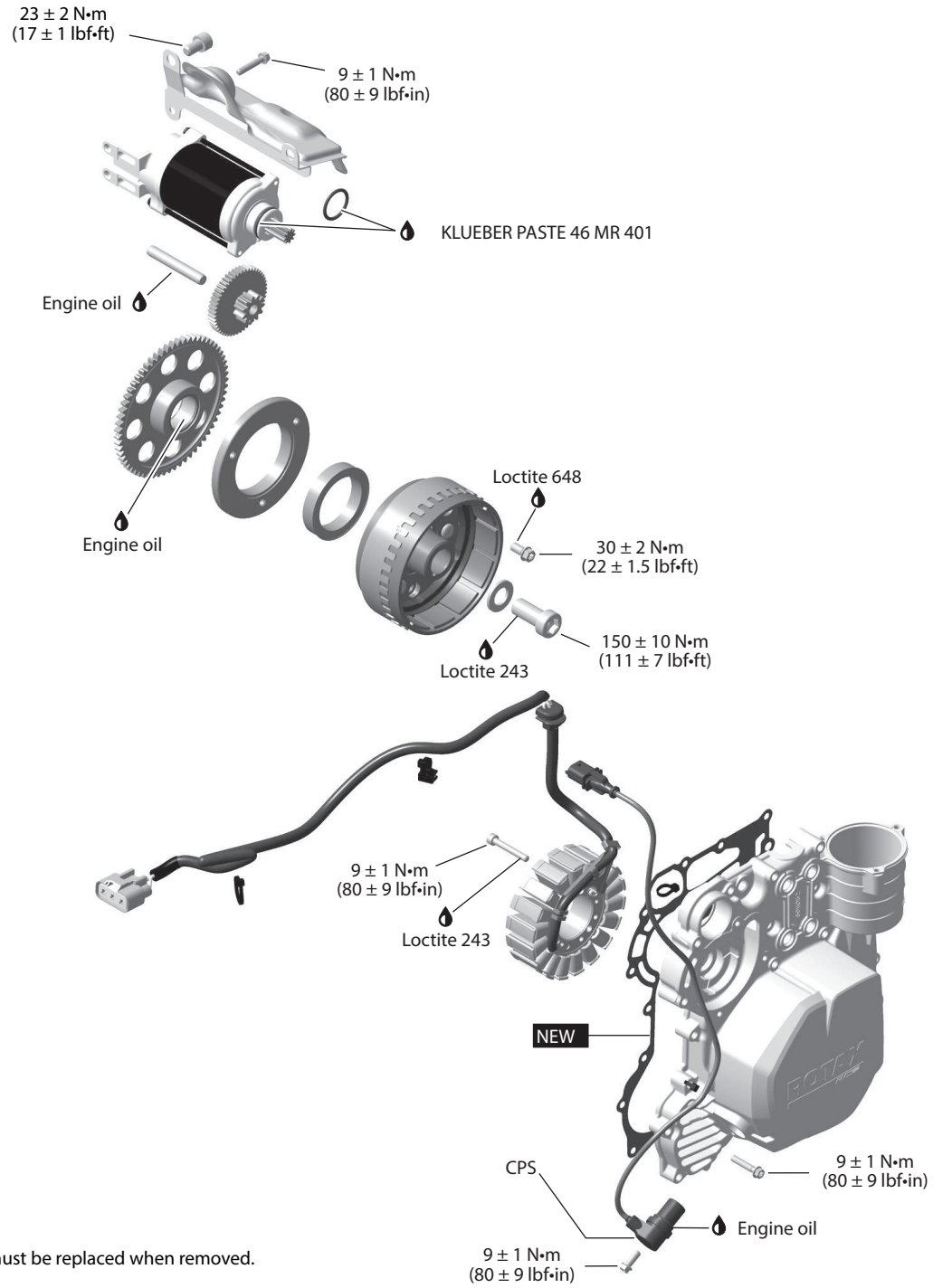


NEW = Component must be replaced when removed.

## General

This section refers to the following ECM:

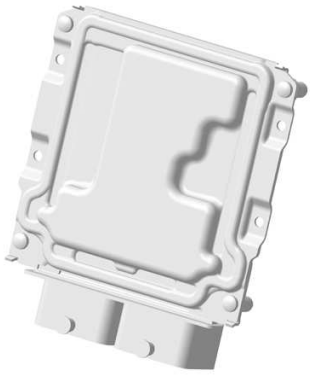

*ECM GEN2 – XCU*

During the assembly or the installation, use the torque values and service products as in the exploded views.

**⚠ WARNING**

**Torque wrench tightening specifications must be strictly adhered to. Locking devices when removed (e.g.: locking tabs, elastic stop nuts, cotter pins, etc.) must be replaced with new ones.**

**NOTICE**

**Hoses, cables or locking ties removed during a procedure must be reinstalled as per factory standards.**

## Troubleshooting

Always check for fault codes. If a fault code is detected, service the fault code first. Refer to *Diagnostic and Fault Codes* subsection.

### *Troubleshooting*

**1. Engine Does Not Crank**

Battery voltage too low.

– *Check battery condition.*

Starter is turning but engine does not crank.

– *Check sprag clutch for wear or other damages.*

Starter is defective.

– *Check starter condition. Perform Testing the Starter Operation and Testing the Starter Voltage Drop.*

Engine is only cranking 1 - 2 seconds before it stops.

– *Check battery condition.*

## Procedures

### *Crankshaft Position Sensor (CPS)*

### *CPS TROUBLESHOOTING*

When troubleshooting a CPS fault, take into account that a CPS fault can be triggered by bent or missing encoder wheel teeth.

Push START/STOP button and crank engine. If engine does not start within 15 seconds check for fault codes using the BRP diagnostic software (BUDS2).

### *CPS and CPS Connector Location*

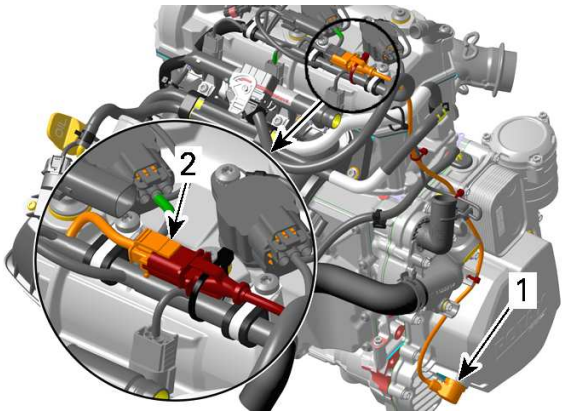


1. *CPS location*
2. *CPS connector location*

### *Testing the CPS Resistance*

1. Cut locking tie and disconnect the CPS connector.

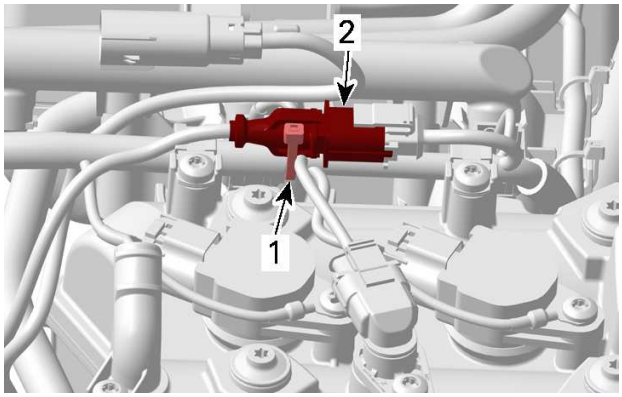


***TYPICAL***
1. *Locking tie*
2. *CPS connector*

2. Probe CPS connector terminals as per the following table.

| | |
|---|---|
| **Fluke 115 multimeter (P/N 529035868)** |  |

| CPS Resistance Test | | |
|---|---|---|
| CPS Pin | | Specification @ 20°C (68°F) |
| 1 | 2 | 775 to 950 Ω |

3. If resistance is not within specification, replace CPS. Refer to *Replacing the CPS* in this subsection.
4. If resistance tests good, reconnect the CPS connector and disconnect the ECM-13 connector from the ECM.
5. Install the ECM-13 connector on the ECM adapter.

| | |
|---|---|
| **ECM adapter tool (P/N 529036166)** |  |

6. Using a multimeter, recheck resistance as per the following table.

| CPS Resistance Test at ECM Connector | | |
|---|---|---|
| ECM Adapter Pin | | Specification @ 20°C (68°F) |
| 13 | 14 | 775 to 950 Ω |

7. If resistance is not within specification, replace the CPS. Refer to *Replacing the CPS* in this subsection.
8. If resistance tests good, reconnect the ECM-13 connector to the ECM and refer to *Testing the CPS Output Voltage.*.

### *Testing the CPS Output Voltage*

1. Remove the CPS fuse. Refer to the wiring diagram.
2. Cut locking tie and disconnect the CPS connector.

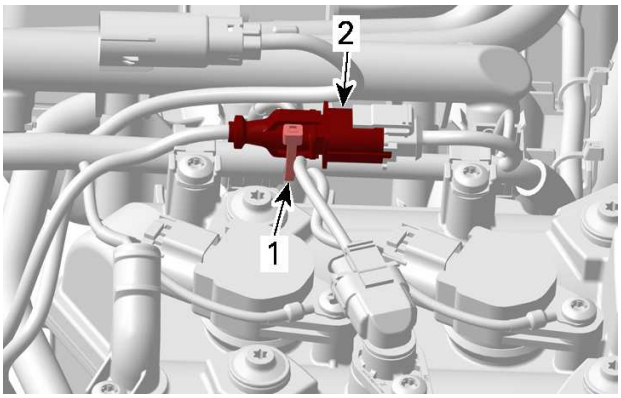


***TYPICAL***
*1. Locking tie*
*2. CPS connector*

3. Probe CPS connector terminals while cranking engine as per following table.

| | |
|---|---|
| **Fluke 115 multimeter (P/N 529035868)** |  |

| CPS Output Voltage Test | | |
|---|---|---|
| CPS Pin | | Specification |
| 1 | 2 | 1 - 2 Vac min. |

4. If voltage is out of specification, inspect wiring/connectors. Replace CPS if wiring is good.
5. If voltage is within specification, the problem may be related to the ECM.
6. Reconnect CPS connector and install all removed parts.

### *Replacing the CPS*

1. Remove parts required to access the CPS.
2. Take note of factory CPS wire harness routing for reinstallation.
3. Cut harness locking ties and disconnect CPS connector.

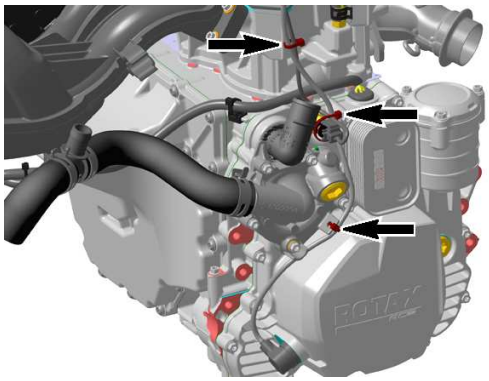

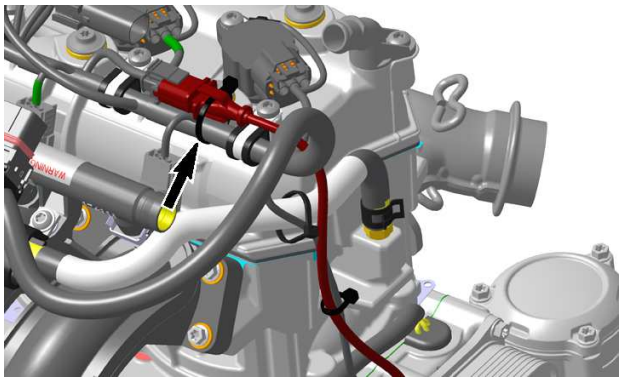

4. Remove CPS retaining screw and pull on CPS to remove it.

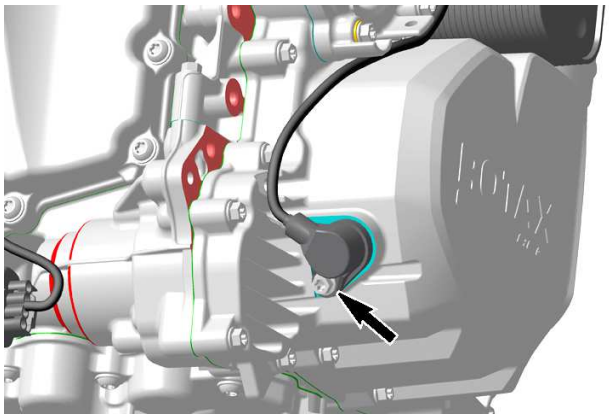

5. Lubricate O-ring of CPS.

| Synthetic grease |
|---|

6. Install new CPS.

| Tightening Torque | |
|---|---|
| CPS retaining screw | 9 ± 1 Nm<br>(80 ± 9 lbf-in) |

7. Route and secure CPS harness using harness clamp and locking ties as noted prior to removal.

### *Magneto Cover*

#### *Removing the Magneto Cover*

1. Refer to *Engine Removal and Installation* and remove engine.
2. Cut locking ties securing the stator cable harness.

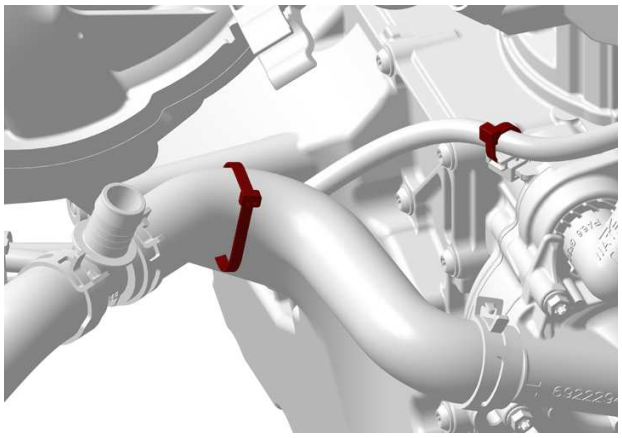

3. Disconnect stator connector from the voltage regulator. Refer to *Stator* in this subsection.
4. Refer to *Lubrication System - GEN2* and drain engine oil.
5. Refer to *Cooling System - GEN2* and remove:
   - Water pump housing
   - Thermostat housing.
6. Refer to *Lubrication System - GEN2* subsection and remove:
   - Oil pressure regulator
   - Oil cooler.
7. Remove the CPS.




*1. CPS*

8. Remove magneto cover retaining screws.

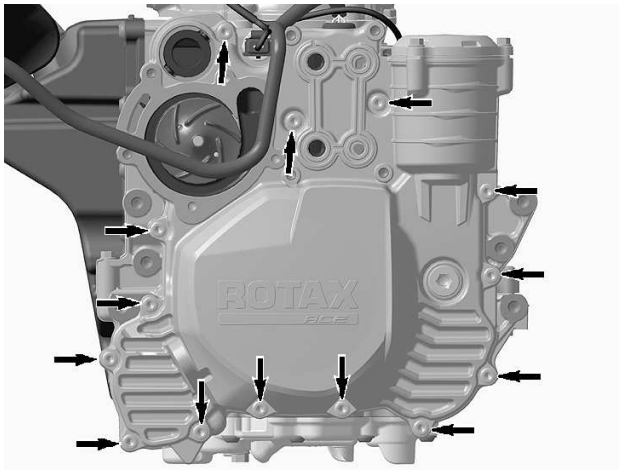

***MAGNETO COVER SCREWS***

9. Place an oil pan under magneto area to catch remaining oil.
10. Pull magneto cover off.
11. Discard the magneto cover gasket.

#### *Inspecting the Magneto Cover*

Check magneto cover for cracks or other damage. Replace if necessary.

#### *Installing the Magneto Cover*

1. Clean magneto cover.

| Loctite chisel (gasket remover) |
|---|

2. Install a **NEW** magneto cover gasket.
3. Ensure starter drive gear pin is in place.
4. Apply engine oil on starter drive gear pin.

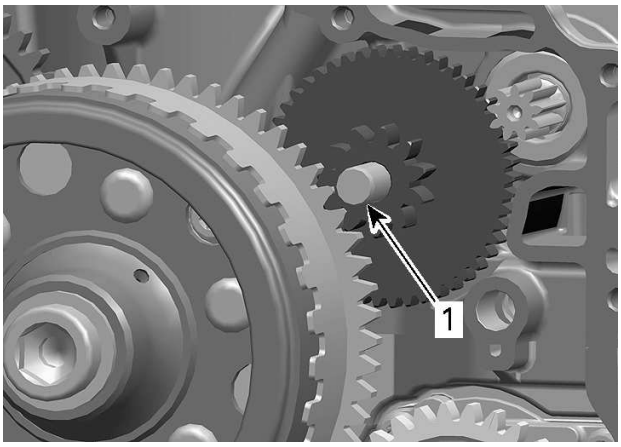


***APPLY ENGINE OIL***
*1. Starter drive gear pin*

5. Apply engine oil on water pump shaft.

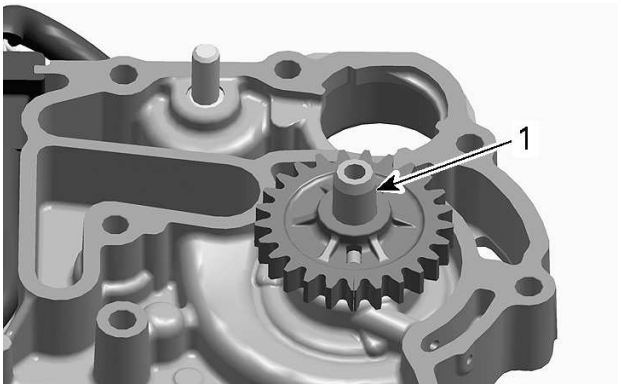


*1. Water pump shaft - apply engine oil*

**NOTICE**

**Make sure the stator cable harness is embedded in the cover channel provided. The part of the harness that is out of the channel must be tight, otherwise it might chafe or jam.**

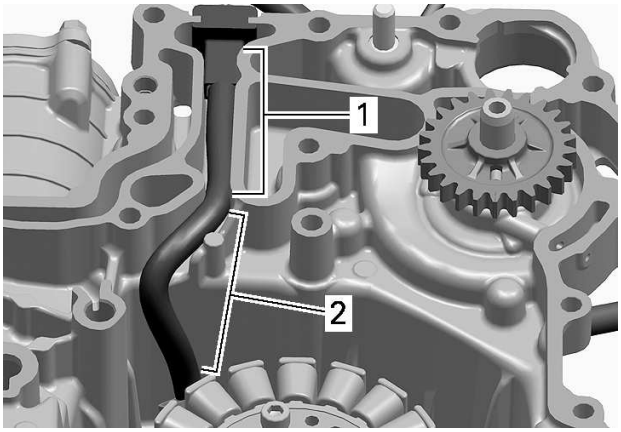


*1. Embedded in that area*
*2. Tight in this area*

6. Carefully install magneto cover.

**⚠ CAUTION**

**Magnetic force between magneto flywheel and stator is very high. Avoid finger contusions.**

7. Tighten magneto cover screws according to the following sequence.

| Tightening Torque | |
|---|---|
| Magneto cover screws | 9 ± 1 Nm<br>(80 ± 9 lbf-in) |

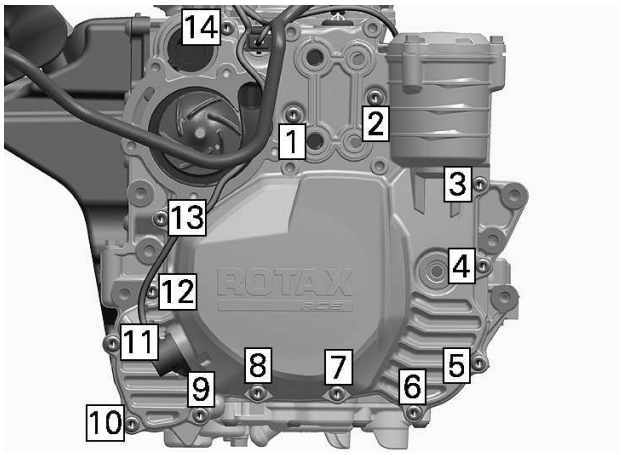


***TIGHTENING SEQUENCE***

8. Make a loop at the stator cable and fix the loop with a locking tie as specified (A).
9. Secure stator cable harness with a locking tie to the mount at the cylinder block as specified (B).

**NOTE:** Check that the total length of the stator cable harness between the locking tie at the mount and the stator connector is within specification (C).

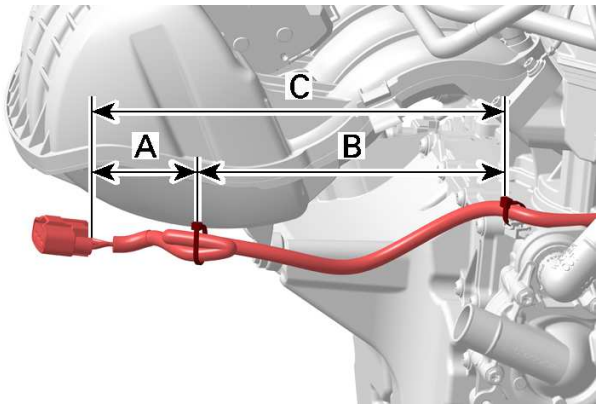


***TYPICAL***
*A. 115 mm (4.53 in)*
*B. 200 mm (7.87 in)*
*C. 315 ± 5 mm (12.4 ± .2 in)*

10. Secure stator cable harness with a locking tie at the radius of the inlet hose.

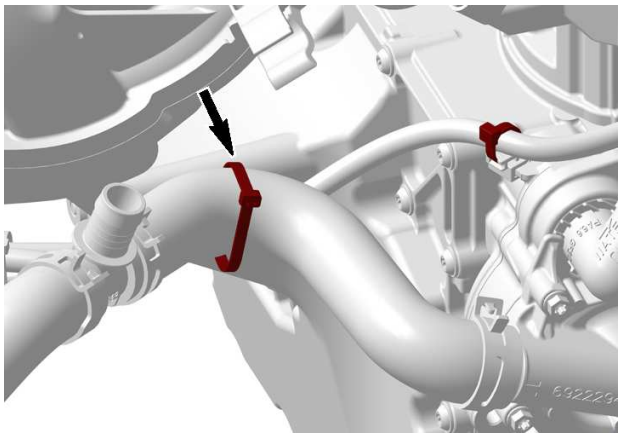

*TYPICAL*

11. Install all other removed parts.

### *Stator*

#### *Stator Connector Location*

1. Move fuel tank backward to reach the stator connector. Refer to *Moving Fuel Tank Rearward for Servicing* in *Fuel Tank and Fuel Pump* subsection.

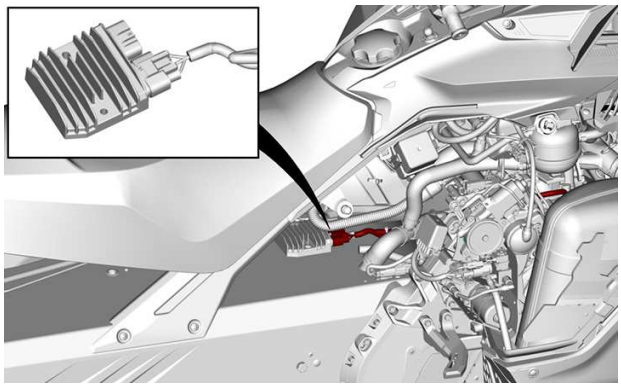

*TYPICAL - FUEL TANK REMOVED FOR CLARITY*

#### *Testing the Stator Continuity*

1. Disconnect the stator connector from voltage regulator, refer to *Stator Connector Location* in this subsection.
2. Set multimeter to Ω.

| | |
|---|---|
| **Fluke 115 multimeter (P/N 529035868)** |  |

3. Probe each pair of YELLOW wires by touching (NOT inserting) terminals lock tabs as shown.

**NOTICE**

**Never insert a multimeter probe into a terminal as it would ruin the terminal.**



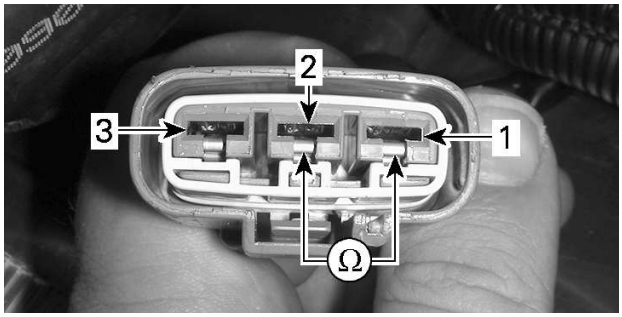


1. *Pin #1*
2. *Pin #2*
3. *Pin #3*

4. Read resistance as per following table.

| Stator Continuity Test | | |
|---|---|---|
| **Stator Connector Pin** | | **Specification @20 °C (68 °F)** |
| 1 | 2 | 0.1 - 1 Ω |
| 1 | 3 | |
| 2 | 3 | |

5. If any resistance reading is not as specified, the stator or the wiring (including connector) is open and needs to be repaired or replaced.
6. If resistance is good, perform the stator insulation test.

#### *Testing the Stator Insulation*

1. Connect multimeter between any YELLOW wire and chassis ground.

| Fluke 115 multimeter (P/N 529035868) |  |
|---|---|

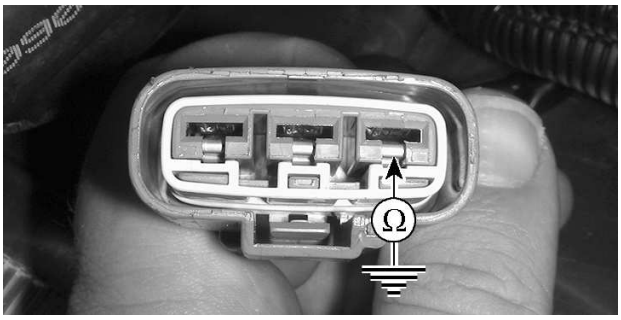


2. Read resistance.

| Stator Insulation Test | | |
|---|---|---|
| **Stator Connector Pin** | **Frame** | **Specification @20 °C (68 °F)** |
| 1, 2 or 3 | Ground | Infinity (OL) |

3. If any resistance reading is not as specified, the stator or the wiring is shorted to ground and needs to be repaired or replaced.
4. If the insulation test is good, perform the output voltage test.

### *Testing the Stator Output Voltage*

1. Start engine and let it reach its operating temperature.
2. Set multimeter to Vac scale.

| Fluke 115 multimeter (P/N 529035868) |  |
|---|---|

3. With engine idling, connect multimeter between each pair of YELLOW wires.

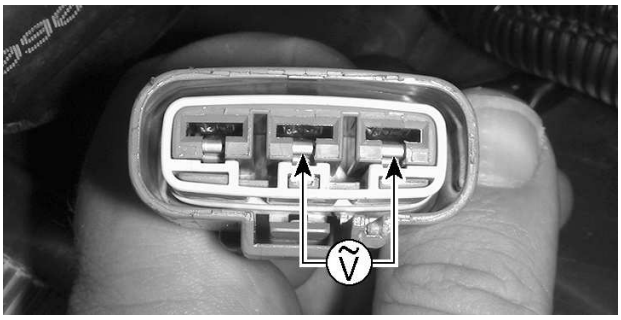


4. Read voltage.

| Stator Output Voltage Test | | | |
|---|---|---|---|
| **Test Engine Speed** | **Stator Connector Pin** | | **Specification** |
| Idle speed | 1 | 2 | ± 25 Vac |
| | 1 | 3 | |
| | 2 | 3 | |

If any voltage reading is significantly lower than specification, replace the stator.

### *Removing the Stator*

1. Remove the *Magneto Cover*, see procedure in this subsection.
2. Remove stator retaining screws.

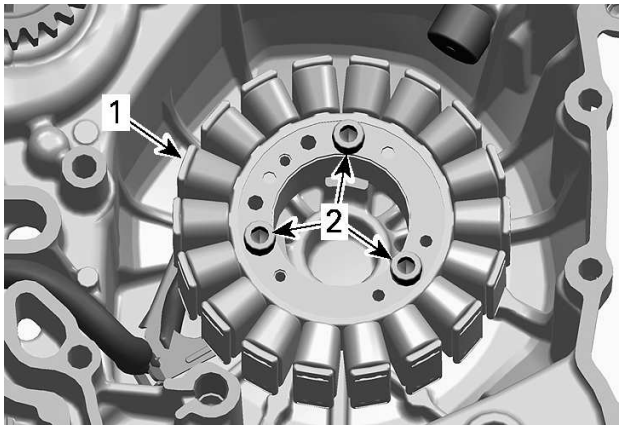


*1. Stator*
*2. Stator retaining screws*

3. Remove stator.

### *Inspecting the Stator*

Check stator windings and insulation for cracks and other damages. If damaged replace it.

Check if stator wires are brittle, hard or otherwise damaged.

### *Installing the Stator*

1. Ensure stator cable is underneath cable holder during installation of stator.

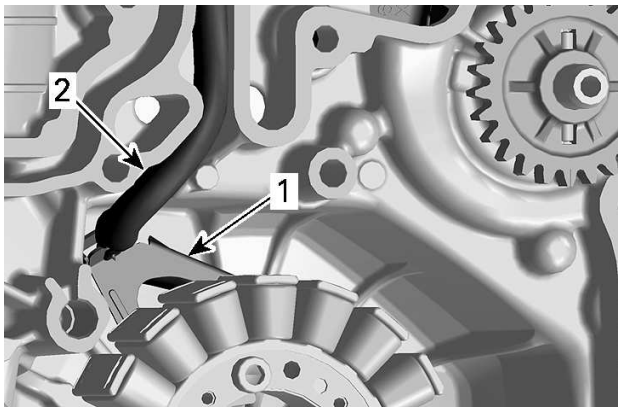


1. *Cable holder*
2. *Stator cable*

2. Install stator retaining screws and tighten to specified torque.

| **Loctite 243 (blue)** |
|---|

| **Tightening Torque** | |
|---|---|
| Stator retaining screws | 9 ± 1 Nm<br>(80 ± 9 lbf-in) |

3. Reinstall *Magneto Cover*, see procedure in this subsection.

## *ROTOR*

### *Removing the Rotor*

1. Remove the magneto cover. Refer to *Magneto Cover* in this subsection.
2. Lock crankshaft. Refer to *Cylinder Block - GEN2* subsection.
3. Remove rotor retaining screw and lock washer.

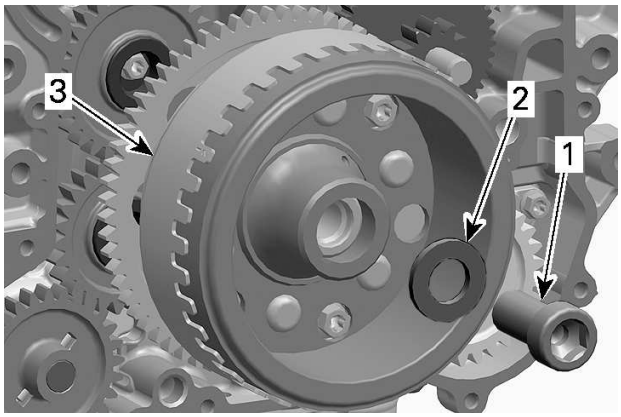


1. *Retaining screw*
2. *Lock washer*
3. *Rotor*

4. Remove rotor.

| **Crankshaft protector (P/N 529036213)** |  |
|---|---|
| **Flywheel puller (P/N 420976235)** |  |

**NOTE:** Apply some grease on the crankshaft protector surface to ease puller operation.

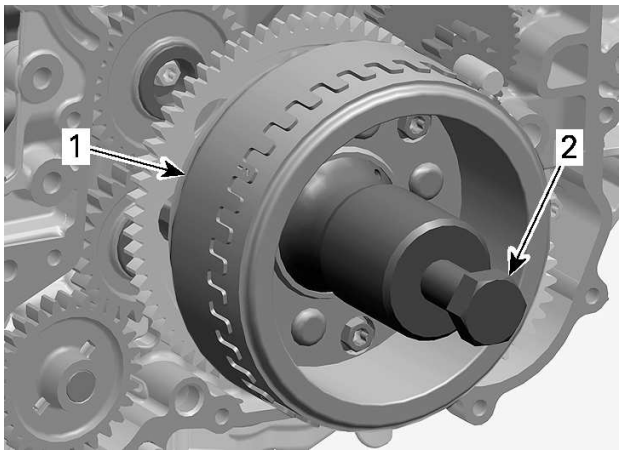


1. *Rotor*
2. *Flywheel puller screw*

### *Inspecting the Rotor*

1. Check the inner side of the rotor for scratches or other damage.
2. Check keyway for wear or damages.
3. Check if trigger wheel teeth are bent or otherwise damaged.

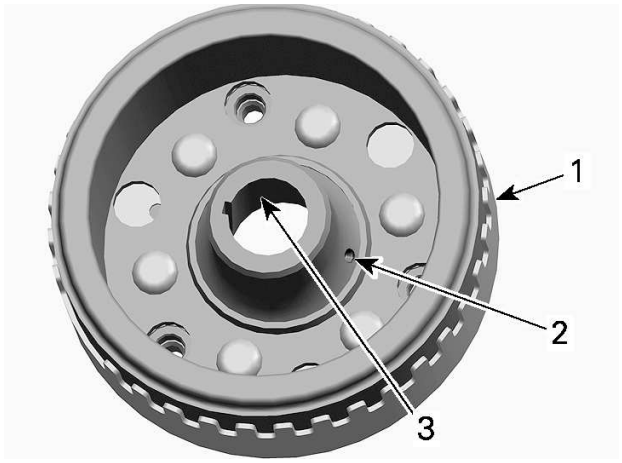


1. *Rotor with trigger wheel*
2. *Oil passage in magneto hub*
3. *Rotor taper*

4. Check woodruff key and keyway on crankshaft for wear or damages.
5. Replace parts as necessary.

### *Installing the Rotor*

The installation is the reverse of the removal procedure. However, pay attention to the following.

1. Blow the oil passage in the magneto hub by using compressed air. Check if it is clogged.
2. Clean:

| **Brake and parts cleaner PRO S2** |
|---|

   – The oil passage
   – The crankshaft thread
   – The crankshaft taper
   – The rotor taper.

| **NOTICE** |
|---|
| **Taper on crankshaft and rotor must be free of grease.** |

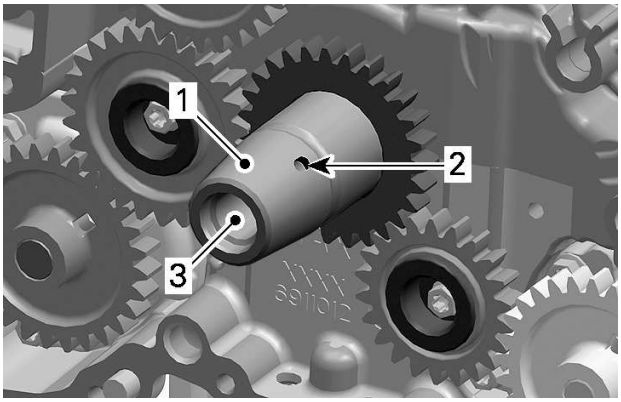


*1. Crankshaft taper*
*2. Oil passage*
*3. Thread*

3. Apply oil on sprag clutch and needle bearing.
4. Install sprag clutch gear onto the rotor.

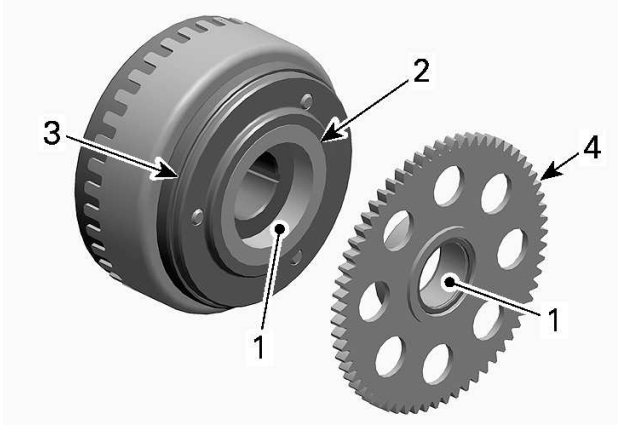


*1. Apply engine oil here*
*2. Sprag clutch*
*3. Sprag clutch housing*
*4. Sprag clutch gear*

5. Slide rotor along with the sprag clutch gear onto the crankshaft. The woodruff key and keyway must be aligned.
6. Rotate sprag clutch gear counterclockwise to align with starter double gear.

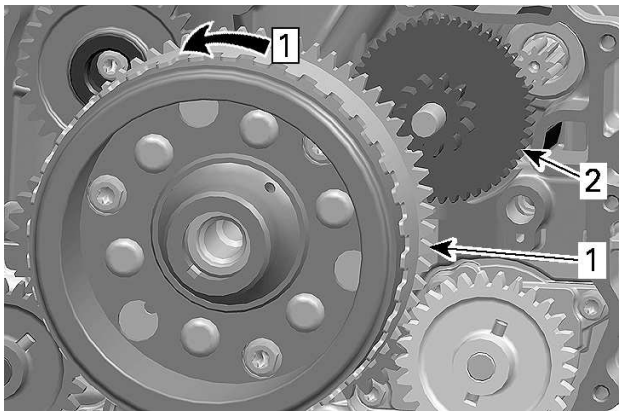


*Step 1. Rotate to align teeth*
*1. Sprag clutch gear*
*2. Starter double gear*

7. Install washer and retaining screw.
8. Tighten to specification.

| **Loctite 243 (blue)** |
|---|

| **Tightening Torque** | |
|---|---|
| Rotor retaining screw | 150 ± 10 Nm<br>(111 ± 7 lbf-ft) |

### *Sprag clutch*

### *Removing the Sprag Clutch*

1. Remove the magneto cover. Refer to *Magneto Cover* in this subsection.
2. Lock crankshaft. Refer to *Cylinder Block - gen2* subsection.
3. Loosen and remove sprag clutch housing screws.

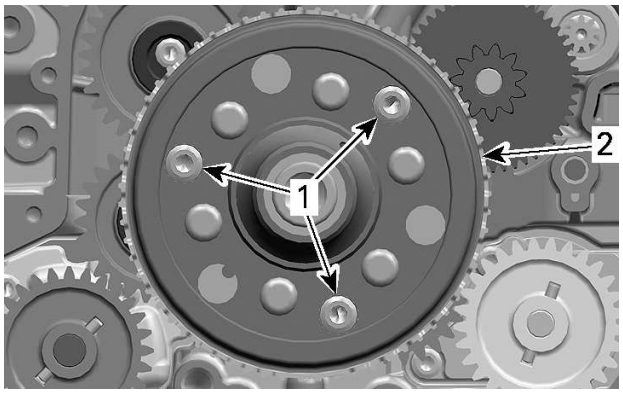


*1. Sprag clutch housing screws*
*2. Rotor*

4. Remove rotor. Refer to *Rotor* in this subsection.
5. Remove sprag clutch housing.
6. Remove sprag clutch from sprag clutch housing.

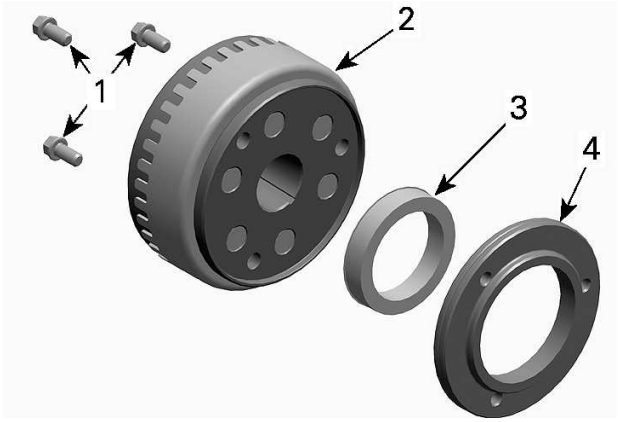


1. *Sprag clutch housing screws*
2. *Rotor*
3. *Sprag clutch*
4. *Sprag clutch housing*

### *Inspecting the Sprag Clutch*

1. Inspect sprag clutch and sprag clutch housing for wear and damage.
2. Check the collar of the sprag clutch gear. Refer to *Sprag Clutch Gear* in this subsection.
3. Rotate sprag clutch gear clockwise. Gear must rotate freely.

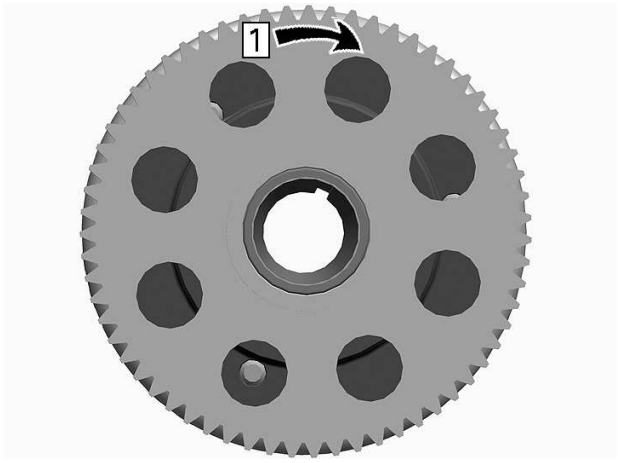


*Step 1. Free*

4. Rotate sprag clutch gear counterclockwise. Gear must lock.

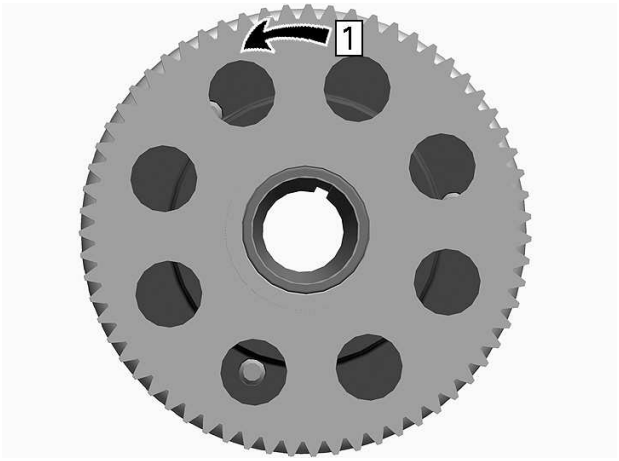


*Step 1. Lock*

### *Installing the Sprag Clutch*

1. Clean sprag clutch housing with a parts cleaner.

**Brake and parts cleaner PRO S2**

**NOTICE**

**Threads of sprag clutch housing must be free of any lubricants.**

2. Apply thread locker on threads of sprag clutch housing screws.

**Loctite 648 (green)**

3. Loosely install screws.
4. Apply engine oil on sprag clutch and sprag clutch gear needle bearing.

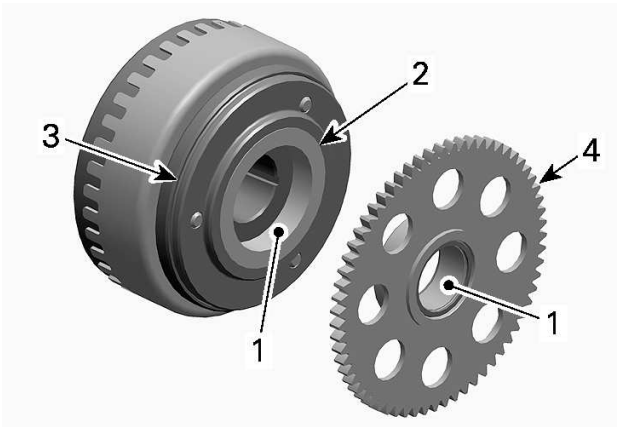


1. *Apply engine oil here*
2. *Sprag clutch*
3. *Sprag clutch housing*
4. *Sprag clutch gear*

5. Install rotor. Refer to *Rotor* in this subsection.

6. Tighten sprag clutch housing screws to specification.

| Tightening Torque | |
|---|---|
| Sprag clutch housing screws | 30 ± 2 Nm (22 ± 1 lbf-ft) |

7. Install all other removed parts.

### *Sprag Clutch Gear*

#### *Removing the Sprag Clutch Gear*

1. Remove rotor and sprag clutch gear together. Refer to *Rotor* in this subsection.
2. Pull sprag clutch gear out of the rotor.

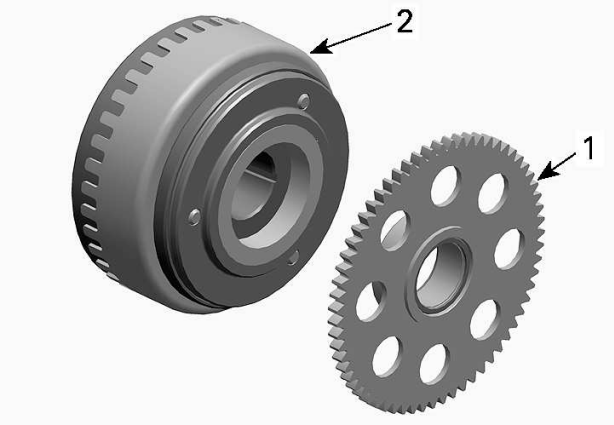


*1. Sprag clutch gear*
*2. Rotor*

#### *Inspecting the Sprag Clutch Gear*

1. Inspect gear, especially teeth and sprag clutch collar for wear and other damage.
2. Check needle bearing for wear and pittings.




*1. Teeth*
*2. Collar*
*3. Needle bearing*

3. Replace sprag clutch gear if necessary.

#### *Installing the Sprag Clutch Gear*

The installation is the reverse of the removal procedure. However, pay attention to the following.

**NOTE:** Apply engine oil on needle bearing and collar of sprag clutch gear.

### *Starter Drive Gears*

The starter drive gears are located on the engine MAG side behind the magneto cover.

#### *Removing the Starter Drive Gear*

1. Remove the magneto cover. Refer to *Magneto Cover* in this subsection.
2. Remove location pin and starter double gear.

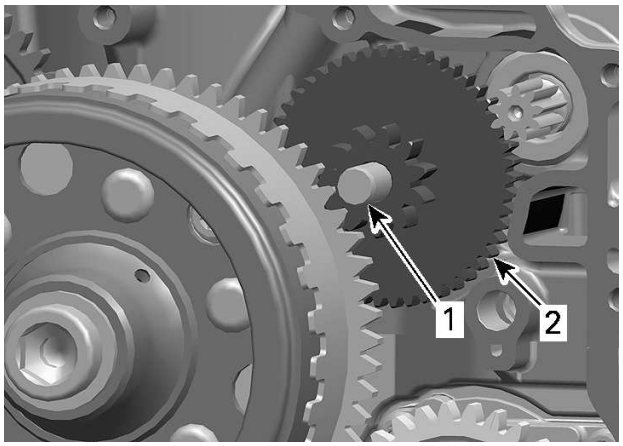


*1. Location pin*
*2. Starter double gear*

#### *Inspecting the Starter Drive Gear*

Inspect starter drive gears and location pin for wear and damage.

Replace parts if necessary.

#### *Installing the Starter Drive Gear*

The installation is the reverse of the removal procedure. However, pay attention to the following.

Apply engine oil on the location pin.

### *Starter*

#### *Testing the Starter Operation*

Before carrying out any starter test, make sure:

– Battery is fully charged and in good condition.
– Cable connections at battery, starter and solenoid are tight.
– Cables are in good condition.

1. Disconnect the negative battery cable.

**⚠ WARNING**

**Sparks can occur when connecting jumper cables. To avoid fire hazard, be sure that no flammable liquids or fuel vapors are in the test area.**

2. Using booster cables and a fully charged battery (or a power pack), carefully supply current directly to the starter.
   1. Connect the negative booster cable or power pack cable to a good ground such as an engine support.
   2. Momentarily touch the starter positive terminal.
3. 
4. If starter turns at normal speed, test the starting circuit. Refer to *Starting System* subsection.
5. If starter turns slowly, carry out the *Starter Voltage Drop Test (at Battery)*.
6. If starter does not turn, replace starter.

### *Testing the Starter Voltage Drop (at Battery)*

**NOTE:** This test will confirm if starter draws too much current. Battery must be fully charged and in good condition.

1. Set multimeter to Vdc.
2. Probe battery posts.
3. Crank engine in drowned mode (accelerator held all the way in).
4. Read voltage while cranking.

**NOTE:** Battery voltage will drop approximately 2 Vdc and fluctuate with starter cranking load.

5. If the result is close to battery voltage, the starter is in good condition.
6. If the result is below battery voltage (- 2 Vdc and more), the starter may be defective.

### *Removing the Starter*

1. Remove turbo charger. Refer to *Turbocharger - GEN2* subsection.
2. Disconnect the battery cables.

**NOTICE**

**Always disconnect the battery BLACK (-) cable first, then the RED (+) cable.**

3. Remove starter cable from starter.
4. Remove heat shield and starter retaining screws.

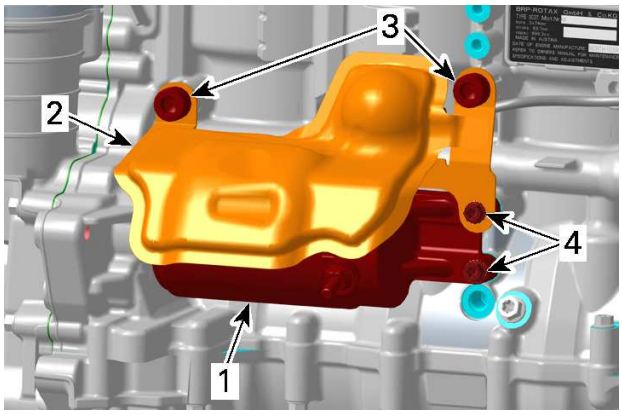


1. *Starter*
2. *Heat shield*
3. *Heat shield retaining screws (2x)*
4. *Starter retaining screws (2x)*

5. Remove starter from engine.

### *Installing the Starter*

1. Ensure starter and engine mating surfaces are free of debris.

**NOTICE**

**Serious problems may arise if the starter is not properly aligned.**

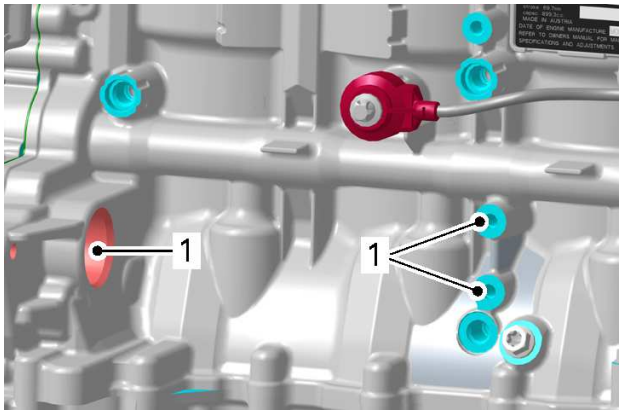


1. *Clean mating surfaces*

2. Lubricate starter boss and starter O-ring before installation.

**Klüeber paste 46 MR 401**

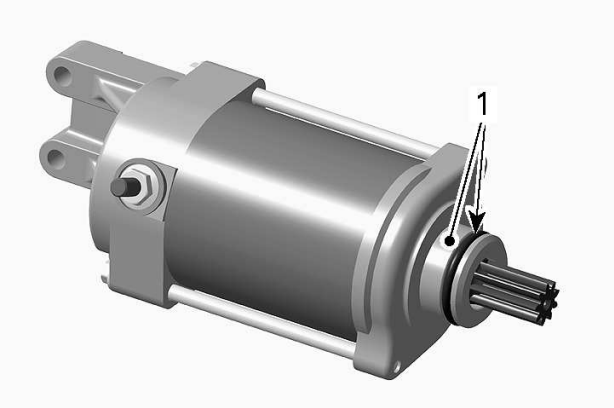


*1. Apply grease here*

3. Insert starter gear into engine.
4. Install heat shield.
5. Install heat shield and starter retaining screws and tighten to the specified torque.

| Tightening Torque | |
|---|---|
| Starter retaining screws M6 | 9 ± 1 Nm (80 ± 9 lbf-in) |
| Heat shield retaining screws M10 | 23 ± 2 Nm (17 ± 1 lbf-ft) |

6. Connect starter cable to starter terminal and tighten nut to specification.

| Tightening Torque | |
|---|---|
| Starter cable nut | 7 ± 1 Nm (62 ± 9 lbf-in) |

7. Install all other removed parts.
8. Reconnect the battery cables.

| NOTICE |
|---|
| **Always connect RED (+) cable first, and BLACK (-) cable last.** |

9. Test for proper starter operation.

# Timing Chain

## SERVICE PRODUCTS

| Description | Part Number | Page |
|---|---|---|
| LOCTITE 243 (BLUE) | | 148, 151 |

T

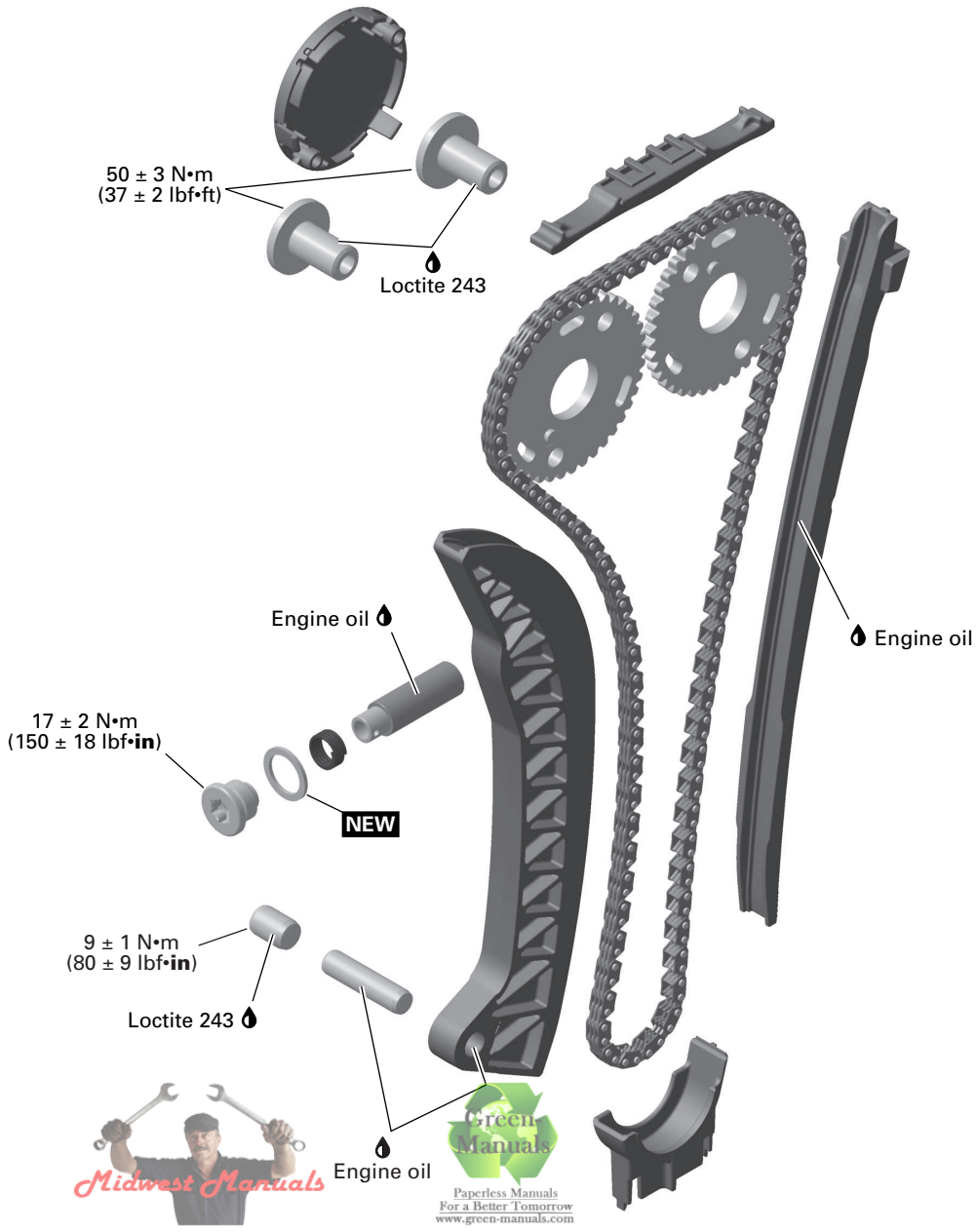


Midwest Manuals
Green Manuals
Paperless Manuals
For a Better Tomorrow
www.green-manuals.com
If you bought this manual from any other seller please leave them
NEGATIVE feedback and notify us at bestshopmanuals@gmail.com

NEW = Component must be replaced when removed.

## General

Engine removal is necessary to work on the following components:

– Timing chain
– Timing chain guide (tensioner side).

Disconnect the BLACK (-) cable from the battery, then RED (+) cable before working on the engine.

**NOTICE**

**Always disconnect BLACK (-) cable first and reconnect last.**

During assembly/installation, use torque values and service products as specified in the exploded view.

Clean threads before applying a threadlocker. Refer to *Self-Locking Fasteners* and *Loctite Application* at the beginning of this manual for complete procedure.

**⚠ WARNING**

**Torque wrench tightening specifications must be strictly adhered to.**
**Locking devices when removed (e.g.: locking tabs, elastic stop nuts, cotter pin, etc.) must be replaced.**

Hoses, cables or locking ties removed during a procedure must be reinstalled as per factory standards.

When disassembling parts that are duplicated in the engine, (e. g.: valves, springs, etc.), it is strongly recommended to note their position and to keep the parts of the same assembly as a “group”. If you find a defective component, it will be much easier to find the cause of the failure. Since parts were broken-in together during engine operation, they will maintain their matched fit when reassembled together within their “group”.

## Troubleshooting

The following is provided to help in diagnosing the probable source of troubles. It is a guideline and should not be assumed to provide solutions to every cause of all problems.

### *Troubleshooting*

**1. Unusual Engine Noise or Vibrations**

Faulty chain tensioner.

– *Replace chain tensioner.*

Chain guide(s) worn out.

– *Replace chain guide(s).*

Stretched timing chain or worn sprockets.

– *Replace timing chain and sprockets.*

Camshaft timing gear screws loose.

– *Retighten screws to recommended torque.*

Incorrect camshaft timing adjustment.

– *Replace damaged components and readjust camshaft timing.*

**2. Engine Lacks Acceleration or Power**

Incorrect camshaft timing adjustment.

– *Replace damaged components and readjust camshaft timing.*

## Procedures

### *Timing Chain Tensioner*

#### *Timing Chain Tensioner Location*

The timing chain tensioner is located in the cylinder head beside the intake port of the PTO cylinder.

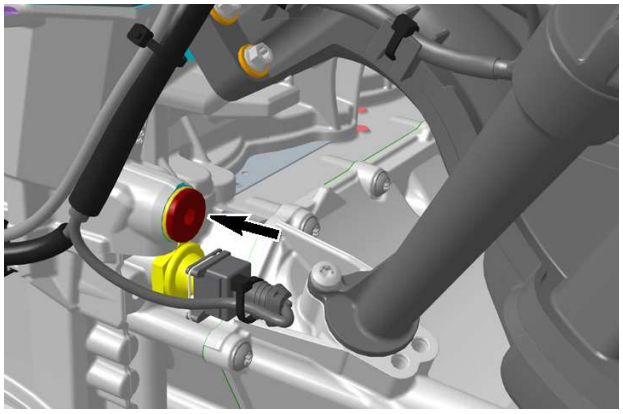

*SCREW PLUG, TIMING CHAIN TENSIONER*

#### *Removing the Timing Chain Tensioner*

1. Lock crankshaft, refer to *Cylinder Block* subsection.
2. Remove screw plug and discard the sealing washer.
3. Pull out spring and chain tensioner.

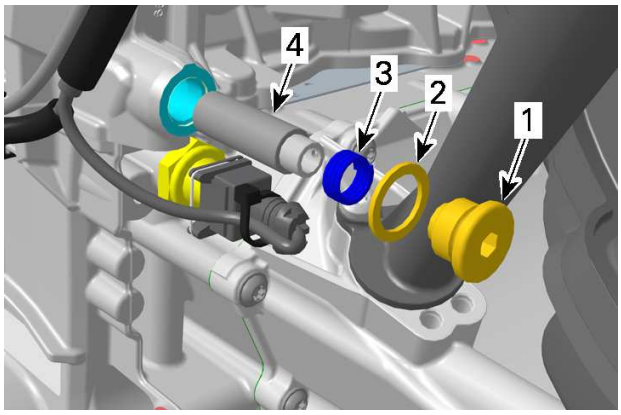


1. *Screw plug*
2. *Sealing washer*
3. *Spring*
4. *Chain tensioner*

### *Inspecting the Timing Chain Tensioner*

1. Check chain tensioner for scoring and freedom of movement in bore.
2. Compress chain tensioner and check for proper operation.

**NOTE:** The chain tensioner is difficult to compress when properly charged with oil, and easily compressed when it is not.

3. Check spring for straightness, corrosion and other visible damage.

### *Installing the Timing Chain Tensioner*

1. Apply engine oil on chain tensioner.
2. Insert chain tensioner in its bore with the plunger pointing outwards.

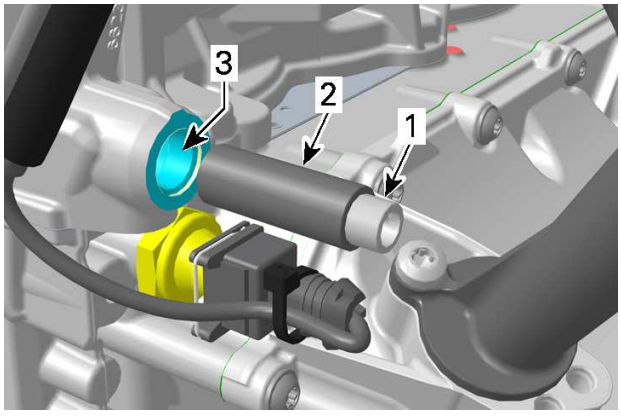


***TIMING CHAIN TENSIONER INSTALLATION***

1. *Plunger*
2. *Chain tensioner*
3. *Tensioner bore in cylinder head*

3. Install spring on chain tensioner.
4. Tighten screw plug with a **NEW** sealing washer to specified torque.

| Tightening Torque | |
|---|---|
| Screw plug timing chain tensioner | 17 ± 2 Nm (150 ± 18 lbf-in) |

5. Install all other removed parts.

### *Camshaft Timing Gears*

### *Removing the Camshaft Timing Gear*

1. Remove camshaft assembly. Refer to *Cylinder Head* subsection.
2. Clamp camshaft in a vice using aluminium protectors.

**NOTICE**

**Take care not damaging the cams.**

3. Unscrew and remove camshaft timing gear screw.
4. Remove camshaft timing gear.

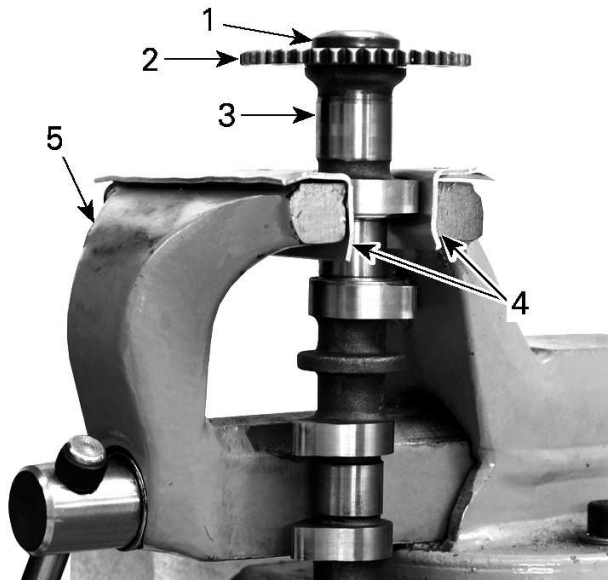


1. *Camshaft timing gear screw*
2. *Camshaft timing chain gear*
3. *Camshaft*
4. *Aluminium protectors*
5. *Vice*

### *Inspecting the Camshaft Timing Gear*

1. Check camshaft timing gears for wear or deterioration. If a gear is worn or damaged, replace camshaft timing gears and timing chain as a set.

**NOTE:** For crankshaft timing gear inspection, refer to *Cylinder Block* subsection.

### *Installing the Camshaft Timing Gear*

Installation is the reverse of the removal procedure. However, pay attention to the following details.

**NOTICE**

**Do not torque timing gear screws when camshafts are installed in cylinder head to avoid overstressing timing chain.**

1. Tighten camshaft timing gear screw to specification.

| |
|---|
| **Loctite 243 (blue)** |

**NOTICE**

**Improper camshaft timing will damage engine components. Make sure camshafts and crankshaft are still locked. If not, lock them before beginning this procedure. Refer to *Camshafts* in the *Cylinder Head* subsection.**

| Tightening Torque | |
|---|---|
| Timing gear screws | 50 ± 3 Nm<br>(37 ± 2 lbf-ft) |

2. Install breather cover on exhaust camshaft.

**NOTE:** Check condition of the breather cover before installation. Replace if necessary.

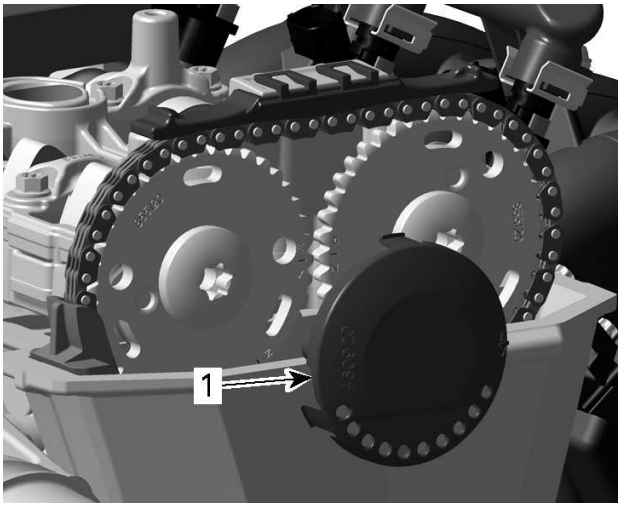


*1. Breather cover*

3. Install remaining parts.

### *Timing Chain*

#### *Removing the Timing Chain*

1. Remove engine from vehicle. Refer to *Engine Removal and Installation* subsection.
2. Remove air intake manifold, refer to *Air Intake System* subsection.
3. Remove valve cover, refer to *Cylinder Head* subsection.
4. Refer to *Lubrication System* subsection and remove the following parts:
   - Oil tank
   - Oil pressure regulator valve
   - Oil cooler
   - Oil sump cover.
5. Refer to *Cooling System (Engine)* subsection and remove following parts:
   - Water pump housing
   - Thermostat.
6. Check timing chain for excessive radial play while still installed on timing gears.

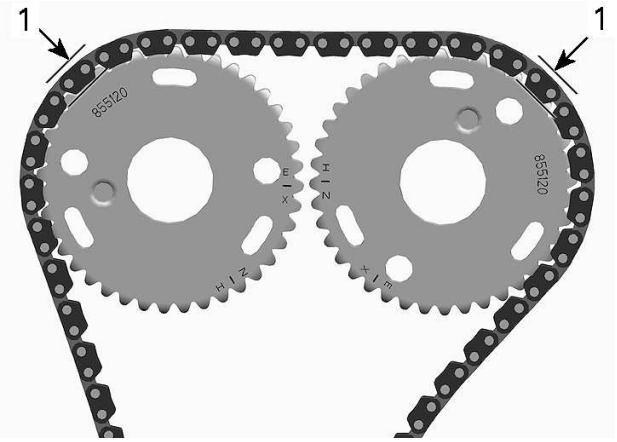


*1. Radial play*

7. Remove the *Camshafts*, refer to *Cylinder Head* subsection.
8. Refer to *Magneto and Starter* subsection and remove the following parts:
   - Magneto cover
   - Rotor
   - Starter drive gears.
9. Remove oil pump intermediate gears, refer to *Lubrication System* subsection.

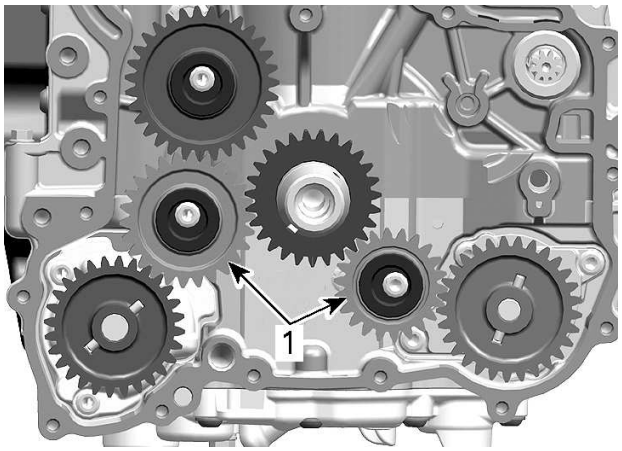


*1. Oil pump intermediate gears*

10. Remove crankshaft locking bolt.
11. Separate cylinder block, refer to *Cylinder Block* subsection.
12. Slightly lift the crankshaft, then remove timing chain.

**NOTE:** Make a mark on the timing chain to indicate the operating direction of the chain before removal.

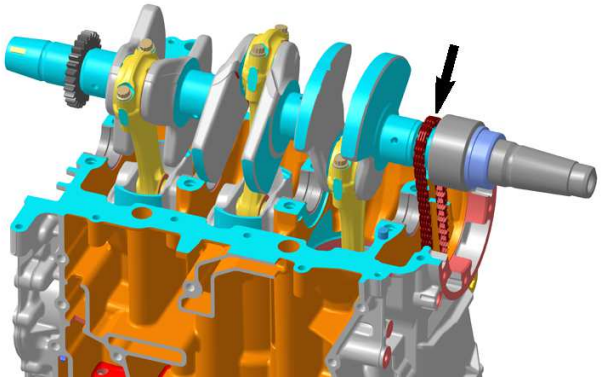

13. Remove lower timing chain guide from lower half of cylinder block.

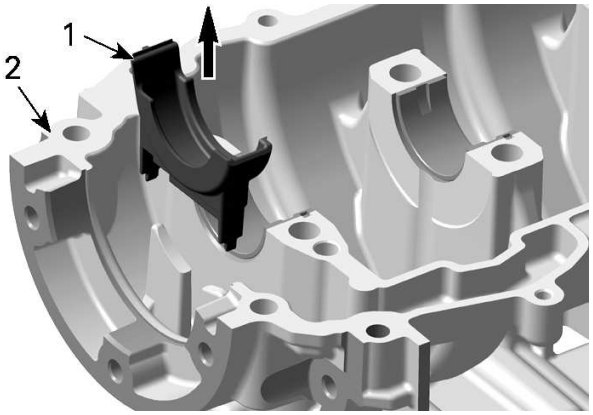


*1. Lower timing chain guide*
*2. Lower half of cylinder block*

### *Inspecting the Timing Chain*

1. Check timing chain for wear and teeth condition.

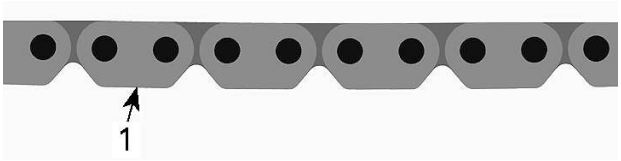


*1. Check teeth condition*

**NOTICE**

**If timing chain is excessively worn or damaged, replace timing chain and camshaft timing gears as a set.**

2. Check lower chain guide for wear, cracks or deformation. Replace as required.

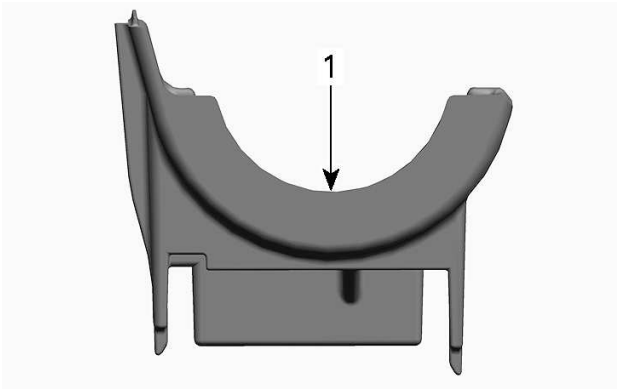


*1. Lower chain guide*

3. Replace lower chain guide if timing chain wear grooves are visible.

| Chain Guide Groove Depth | |
|---|---|
| Service limit | No timing chain wear groove allowed |

**NOTE:** Also check the chain guide, tensioner side. Refer to *Inspecting the Chain Guide (Tensioner Side)* in this subsection.

### *Installing the Timing Chain*

The installation is the reverse of the removal procedure. However, pay attention to the following details.

1. Install timing chain on crankshaft timing gear.

**NOTE:** If the same timing chain is reinstalled, be sure to reinstall it in the same operating direction as marked during removal procedure.

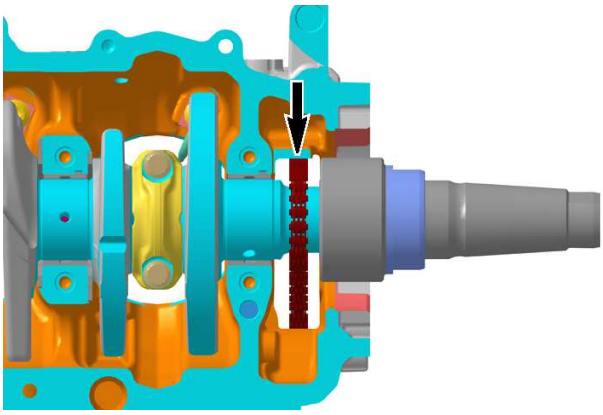

2. Reinstall lower chain guide in lower half of cylinder block.

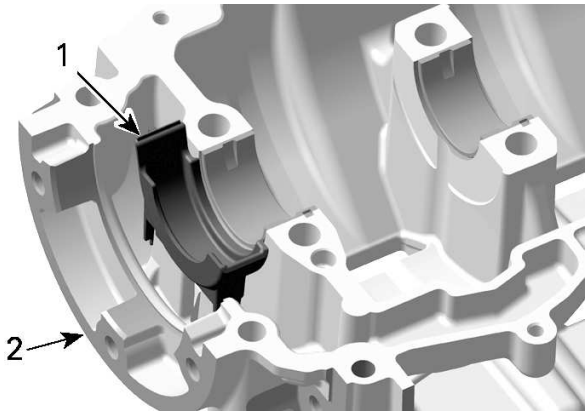


*1. Lower chain guide*
*2. Lower half of cylinder block*

3. Reassemble cylinder block, refer to *Cylinder Block* subsection.
4. Lock crankshaft, refer to *Crankshaft Locking Procedure* in the *Cylinder Block* subsection.
5. Reinstall timing chain properly on camshaft timing gears. Refer to *Installing the Camshaft* in the *Cylinder Head* subsection.

**NOTICE**

**Improper camshaft timing will damage engine components.**

6. Install all other removed parts.

**NOTE:** Be sure to remove camshaft and crankshaft locking tools when timing chain is completely installed.

### *Chain Guide (Tensioner Side)*

#### *Removing the Chain Guide (Tensioner Side)*

**NOTE:** Removal of chain guide is not recommended if there is no need for replacement.

1. Remove the *Camshafts*. Refer to *Cylinder Head* subsection.
2. Remove screw plug that covers the chain guide bearing pin.

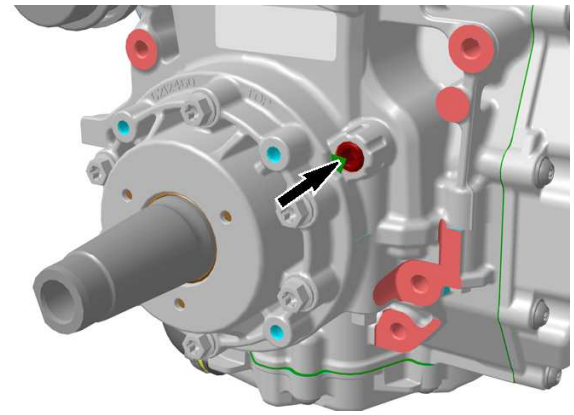

3. Use an M6 bolt to pull chain guide bearing pin out of cylinder block.

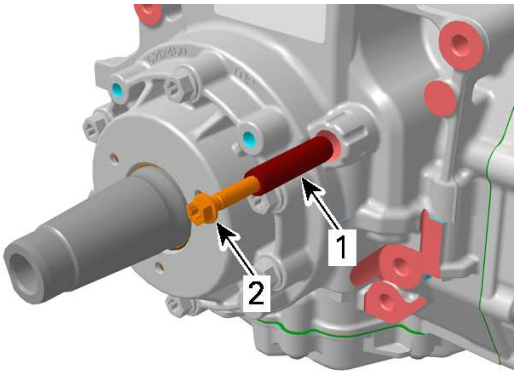


*1. Chain guide bearing pin*
*2. M6 bolt*

4. Remove chain guide (tensioner side).

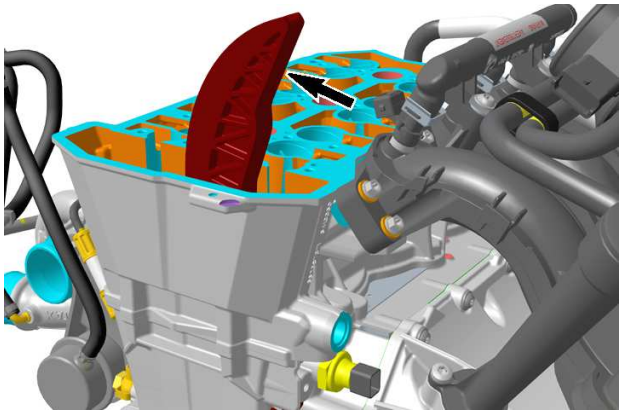

#### *Inspecting the Chain Guide (Tensioner Side)*

Check chain guide for wear, cracks or deforming. Replace as required.

Replace chain guide if groove depth caused by timing chain exceeds service limit.

| Chain Guide Groove Depth | |
|---|---|
| Service limit | 1 mm (.039 in) |




*TYPICAL*
1. *Chain guide*

### *Installing the Chain Guide (Tensioner Side)*

The installation is the reverse of the removal procedure however, pay attention to the following details.

1. Insert chain guide.
2. Apply engine oil on bearing pin and install it with M6 threads facing outwards.

**NOTICE**

**Ensure chain guide bearing pin is properly inserted in the chain guide.**

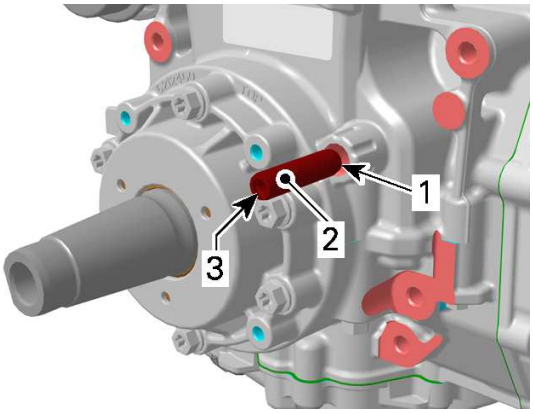


1. *Bearing pin*
2. *Apply engine oil here*
3. *M6 threads facing outwards*

3. Tighten screw plug as specified.

| **Loctite 243 (blue)** |
|---|

**NOTE:** Install screw plug only in final assembled cylinder block to avoid warpage of sealing surface.

| Tightening Torque | |
|---|---|
| Screw plug | 9 ± 1 Nm (80 ± 9 lbf-in) |

4. Properly reinstall camshafts. Refer to *Camshafts* in the *Cylinder Head* subsection.

**NOTICE**

**Improper camshaft timing will damage engine components.**

T

# Cylinder Head - 600ACE

## SERVICE TOOLS


| Description | Part Number | Page |
|---|---|---|
| CAMSHAFT LOCKING TOOL(600 ACE) | (P/N 529036306) | 165 |
| ENGINE LEAK DOWN TEST KIT | (P/N 529035661) | 156 |
| FLUKE 115 MULTIMETER | (P/N 529035868) | 158–159 |
| VALVE SPRING COMPRESSOR CUP | (P/N 529036209) | 171 |
| VALVE SPRING COMPRESSOR | (P/N 529035724) | 171 |


## SERVICE TOOLS — OTHER SUPPLIER


| Description | Part Number | Page |
|---|---|---|
| VALVE HOLDER | | 173 |
| VALVE STEM SEAL PLIERS | | 172 |


## SERVICE PRODUCTS


| Description | Part Number | Page |
|---|---|---|
| DIELECTRIC GREASE | | 160 |

T

### *Valve Cover*

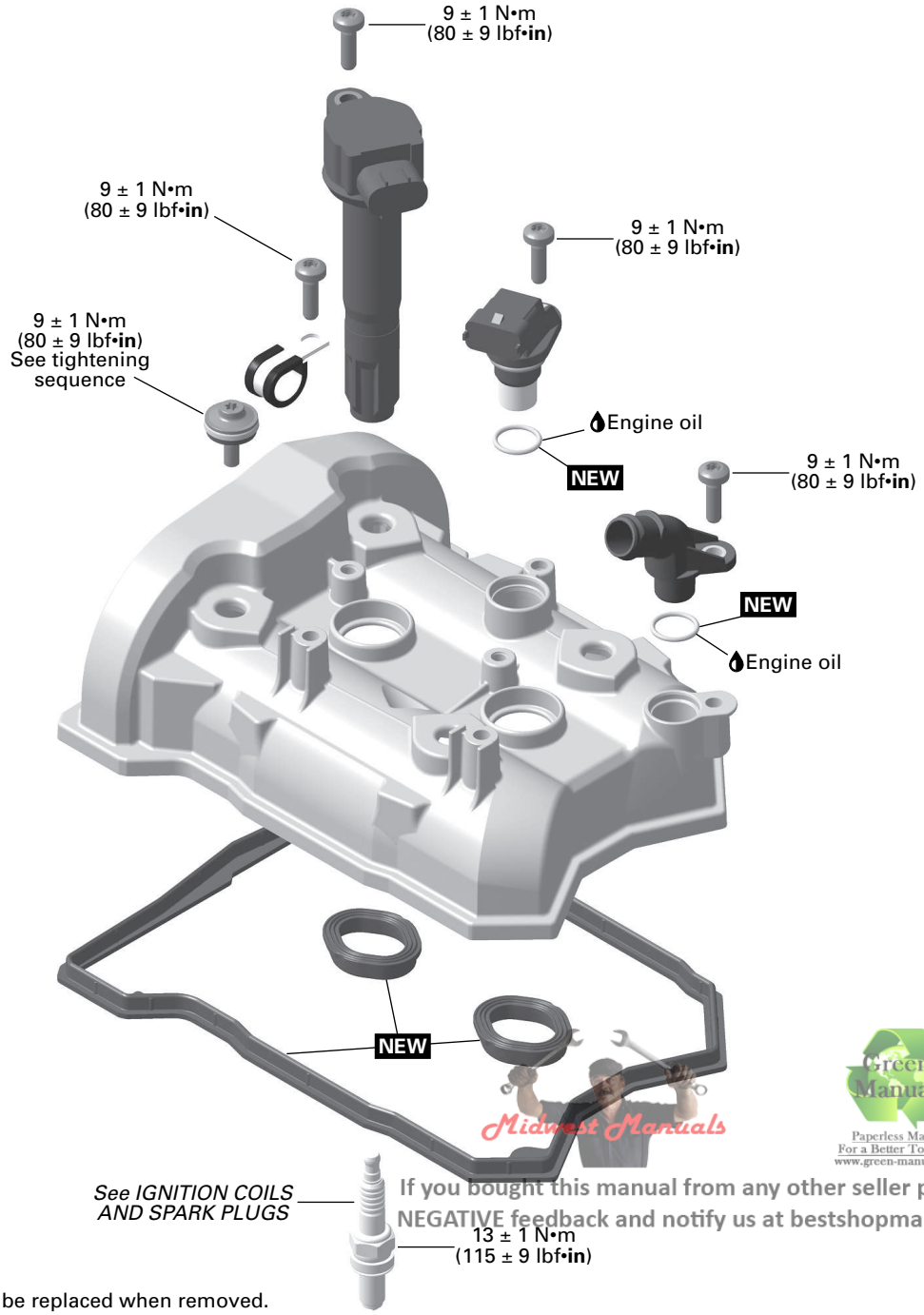


Midwest Manuals
Green Manuals
Paperless Manuals
For a Better Tomorrow
www.green-manuals.com
If you bought this manual from any other seller please leave them
NEGATIVE feedback and notify us at bestshopmanuals@gmail.com

**NEW** = Component must be replaced when removed.

### *Camshafts*

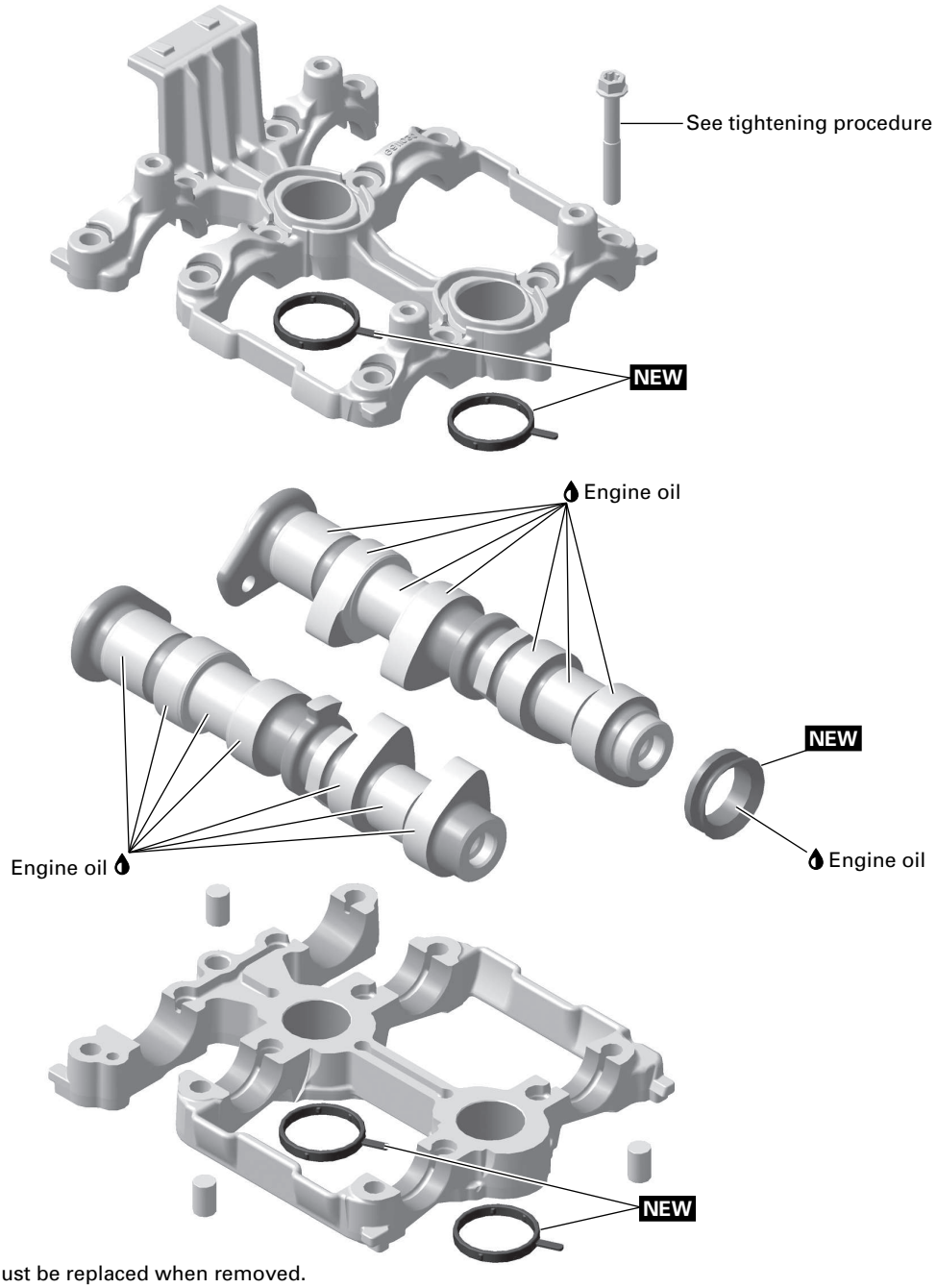


**NEW** = Component must be replaced when removed.

T

### *Cylinder Head*

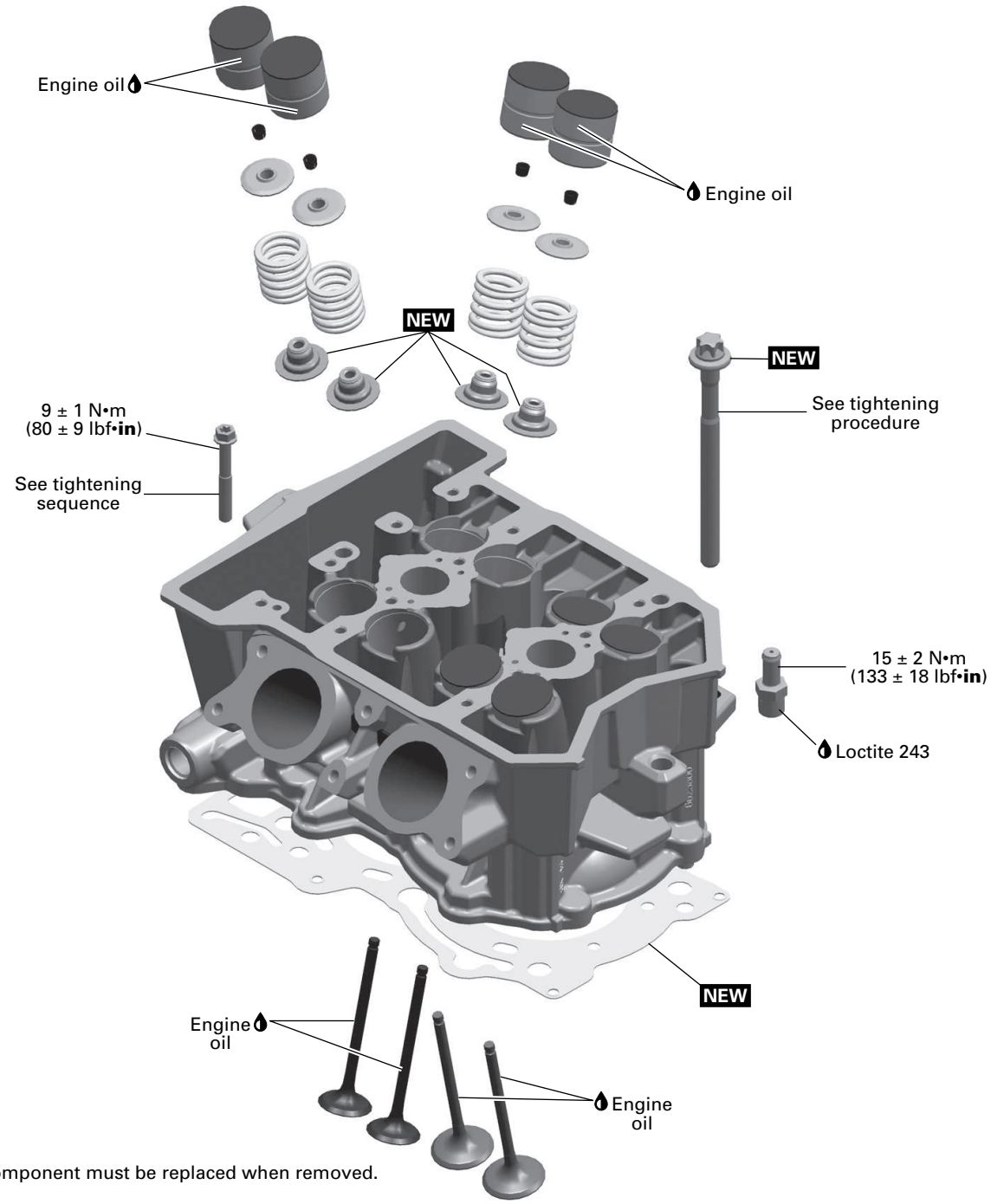


**NEW** = Component must be replaced when removed.

## General

**NOTE:** For a better understanding, some illustrations are taken with engine out of the vehicle.

Disconnect the battery before working on the engine.

| NOTICE |
| --- |
| **Always disconnect BLACK (-) cable first and reconnect last.** |

When disassembling parts that are duplicated in the engine, (e. g.: valves, springs, etc.), it is strongly recommended to note their position and to keep the parts of the same assembly as a "group". If you find a defective component, it will be much easier to find the cause of the failure. Since parts were break-in together during the engine operation, they will keep their matched fit when parts are reassemble together within their "group".

## Inspection

### *Cylinder Leak Test*

#### *General*

Before performing the cylinder leak test, verify the following:

– Clamp tightness
– Hoses condition.

**NOTE:** For best accuracy, the leak test should be done with the engine at normal operating temperature.

| ⚠ CAUTION |
| --- |
| **Engine parts could be hot.** |

**NOTE:** The following steps are the same for each cylinder.

#### *Preparation*

1. Remove an ignition coil and a spark plug. Refer to *Ignition Coils and Spark Plugs* subsection.
2. Remove the *Valve Cover*, see procedure in this subsection.
3. Using the drive pulley, turn the engine counterclockwise to bring piston to TDC of compression stoke. Use a dial gauge or a suitable tool to position the piston to TDC.

**NOTE:** The piston must be set precisely to TDC of compression stroke. If not, the engine will continue to rotate when pressure builds up.

#### *Leak Test*

1. Install a gauge adaptor into spark plug hole.

| | |
| --- | --- |
| **Engine leak down test kit (P/N 529035661)** |  |

2. Connect the leak down tester to an adequate air supply.
3. Set gauge needle to zero.

**NOTE:** All testers have specific instructions on gauge operation and required pressure. Refer to manufacturer's instructions.

4. Supply combustion chamber with air pressure.
5. Note the amount or percentage of leakage (depending on tester).

| Leakage Percentage | Engine Condition |
| --- | --- |
| 0% to 15% | Excellent |
| 16% to 25% | Good |
| 26% to 40% | Fair: reduced engine performance |
| 41% and higher | Poor: diagnose and repair engine |

#### *Diagnosis*

Listen for air leaks.

– Air escaping on intake port or throttle body means leaking intake valve(s).
– Air escaping on exhaust port means leaking exhaust valve(s).
– Air bubbles out of coolant tank means leaking cylinder head gasket.
– Air or coolant escaping from cylinder head means damaged gasket or loosened screws.
– Air escaping into crankcase area means excessively worn cylinder or broken piston rings.
– Air or oil escaping from crankcase means damaged gasket or loosened screws.

#### *Repair Tips*

Blue exhaust gas means damaged or worn piston rings or valve stem seals.

White exhaust gas means damaged cylinder head gasket.

Coolant tank cap opening without overheat means damaged cylinder head gasket.

Leaking valves can be caused by carbon deposits or burnt valve face.

### *Assembly*

Reverse the preparation procedure.

## Troubleshooting

Always check for fault codes. If a fault code is detected, service the fault code first. Refer to *Diagnostic and Fault Codes* subsection.

**NOTE:** When diagnosing an engine problem, always perform the cylinder leak test. This will help pinpoint a problem. Refer to *Cylinder Leak Test* in this subsection.

### *Troubleshooting*

**1. Unusual Engine Noise or Vibrations**

Discharged or defective valve lifters.

– *Check engine oil pressure, refer to Lubrication System - GEN1 subsection.*

– *Replace valve lifters.*

Camshaft(s) or camshaft holder(s) worn out.

– *Check and replace damaged parts.*

Faulty chain tensioner.

– *Replace chain tensioner. Refer to Timing Chain subsection.*

Chain guide(s) worn out.

– *Replace chain guide(s). Refer to Timing Chain subsection.*

Stretched timing chain or worn out sprockets.

– *Replace timing chain and sprockets. Refer to Timing Chain subsection.*

Loose timing chain gear screws.

– *Retighten screws with recommended torque.*

Incorrect camshaft timing.

– *Replace damaged components and readjust camshaft timing.*

**2. Oil Leakage from Cylinder Head**

Leaking valve cover gasket.

– *Replace valve cover gaskets and retighten valve cover with recommended torque.*

– *Check valve cover for cracks or other damage.*

Leaking spark plug tube O-rings.

– *Replace spark plug tube O-rings.*

– *Clean spark plug area from oil spillage.*

Blow-by connector is leaking.

– *Replace blow by connector O-ring.*

Leaking cylinder head gasket.

– *Check cylinder head for damage.*

– *Replace cylinder head gasket and retighten screws with recommended torquing procedure.*

**3. Engine Suddenly Turns Off or Lacks Acceleration or Power**

Incorrect camshaft timing.

– *Replace damaged components and readjust camshaft timing.*

Leaking intake or exhaust valves.

– *Perform a Cylinder Leak Test. Repair or replace damaged components.*

Broken valve spring(s).

– *Replace defective parts.*

## Procedures

### *Camshaft Position Sensor (CAPS)*

#### *CAPS Location*

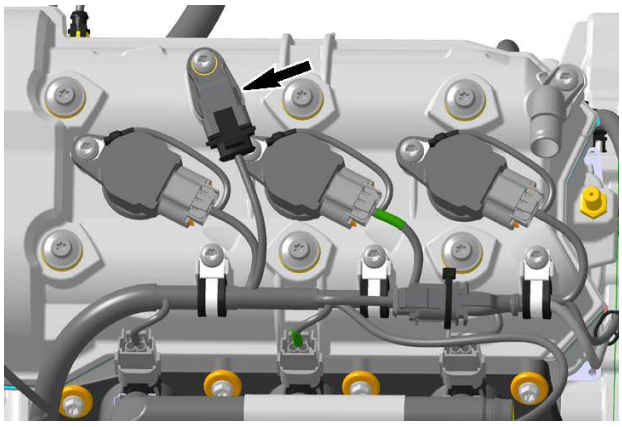

#### *Testing the CAPS Voltage (Harness Side)*

1. Remove the parts required to access the CAPS.
2. Disconnect CAPS connector.

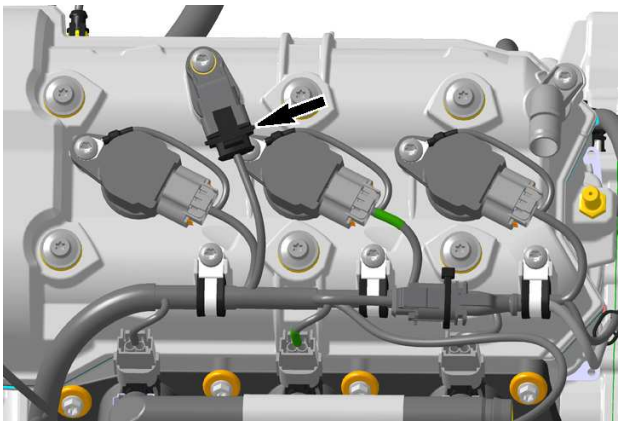

3. Install key on D.E.S.S. post.
4. Press the START/STOP button to wake up the ECM without holding the brakes.
5. Probe harness connector terminals as per following table.

| Fluke 115 multimeter (P/N 529035868) |  |
|---|---|

| CAPS Input Voltage Test | | |
|---|---|---|
| CAPS Connector Pin | | Specification |
| 1 | 3 | Battery voltage |

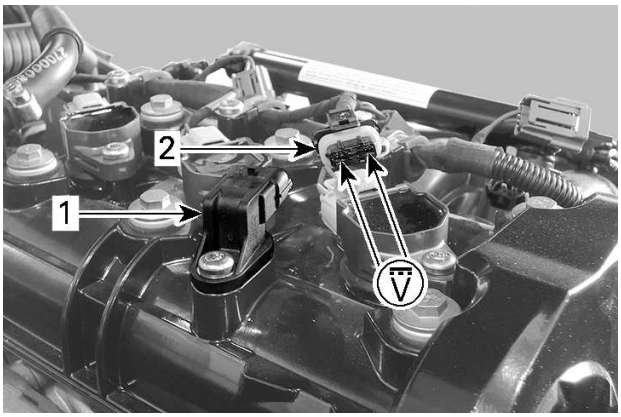


*TYPICAL*
1. *CAPS*
2. *CAPS connector*

6. If battery voltage is read, proceed with *Testing the CAPS (Dynamic)* further in this subsection.
7. If battery voltage is not read, probe circuit as per following table.

| CAPS Input Voltage Test | | |
|---|---|---|
| CAPS Connector Pin | Battery Post | Specification |
| 3 | Negative (-) | Battery voltage |

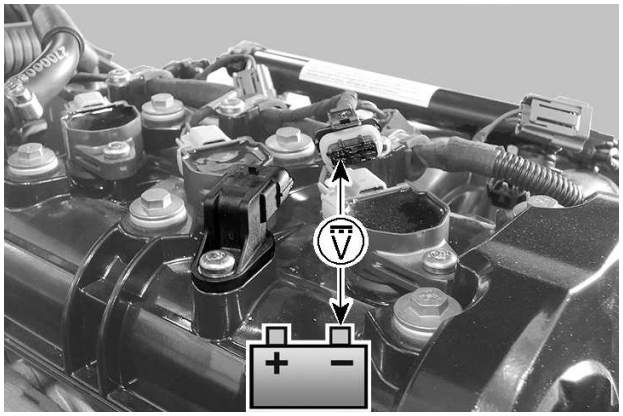


*TYPICAL*

8. If voltage is read to battery ground, check continuity of ground circuit between CAPS pin 1 and ECM-A connector pin D4. Repair or replace wiring and connectors.
9. If voltage is not read to battery ground, carry out *Testing the Continuity of CAPS Power Circuit*.

### *Testing the CAPS Power Circuit Continuity*

1. Remove the F5 fuse.
2. Set the multimeter to Ω.

| Fluke 115 multimeter (P/N 529035868) |  |
|---|---|

3. Read resistance of the CAPS circuit as per following table.

| CAPS Power Circuit Continuity Test | | |
|---|---|---|
| CAPS Connector Pin | Fuse Box | Specification |
| 3 | D1 | Close to 0 Ω |

4. If continuity is good, wiring and connectors are functional.
5. If a high resistance or an open circuit is measured, refer to *Wiring Diagram* and check the following:

   – Continuity from CAPS connector pin 3 to HIC connector pin 4.

– Continuity from HIC connector pin 4 to fuse box contact D1.

6. Pay attention to connector pin contact and junction JT (VT/BU).
7. Repair or replace wiring and connectors as required.
8. Reinstall all removed parts.

### *Testing the CAPS (Dynamic)*

1. Remove the parts required to access the CAPS.
2. Remove CAPS sensor from engine.
3. Back-probe connector and read voltage as follows.

| | |
|---|---|
| **Fluke 115 multimeter (P/N 529035868)** |  |

**NOTICE**

**Do not use sharp end probes. They could damage the connector seal.**

4. Briefly press the START/STOP button to wake up the ECM.
5. Install the tether cord cap on the D.E.S.S. post.
6. Read voltage as per following tables.

| CAPS Dynamic Voltage Test | | | |
|---|---|---|---|
| **CAPS Condition** | **CAPS Pin** | | **Specification** |
| Free | 1 | 2 | Battery voltage |

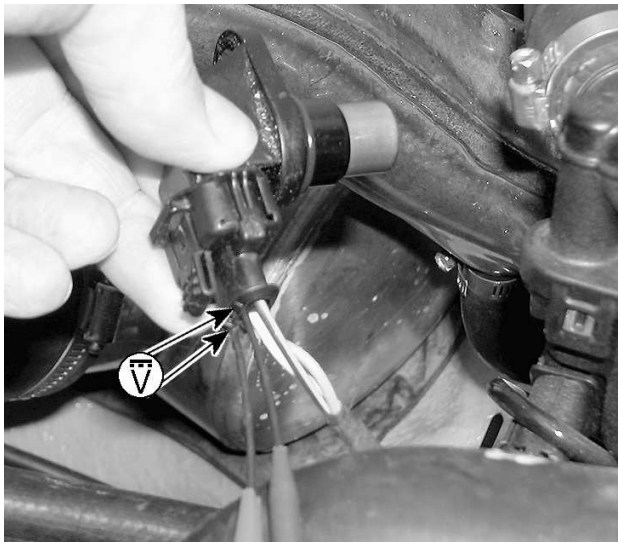

*TYPICAL*

| Caps Dynamic Voltage Test | | | |
|---|---|---|---|
| **CAPS Condition** | **CAPS Pin** | | **Specification** |
| Metallic object on sensor | 1 | 2 | Close to 0 Vdc |

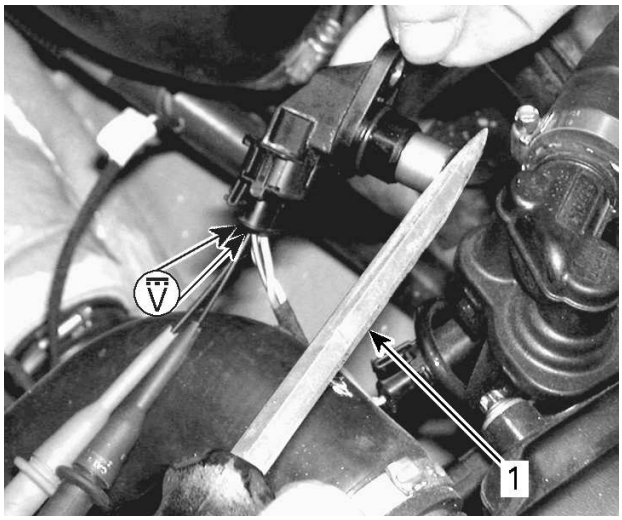


*TYPICAL*
*1. Metallic object*

7. If voltage is as specified, repair or replace wiring and connectors between sensor and ECM.
8. If wiring is good, check ECM. Refer to *Engine Control Module (ECM)*.
9. If battery voltage is not measured as specified, try a new CAPS.

### *Replacing the CAPS*

1. Disconnect CAPS connector.

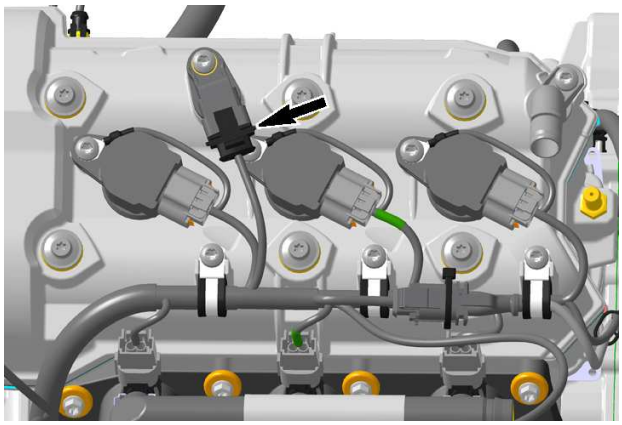

2. Unscrew the CAPS retaining screw.
3. Pull CAPS from engine.
4. Apply engine oil on the new sensor O-ring.

| NOTICE |
| --- |
| **Be sure to install new O-ring on the new CAPS.** |

5. Install the new CAPS.

| Tightening Torque | |
| --- | --- |
| CAPS retaining screw | 9 ± 1 Nm<br>(80 ± 9 lbf-in) |

6. Apply dielectric grease in the CAPS connectors.

| Dielectric grease |
| --- |

### *Valve Cover*

#### *Removing the Valve Cover*

1. Refer to *Exhaust System* subsection and remove the exhaust manifold.
2. Remove the pulley guard.
3. Disconnect vent tube from the blow-by-connector.

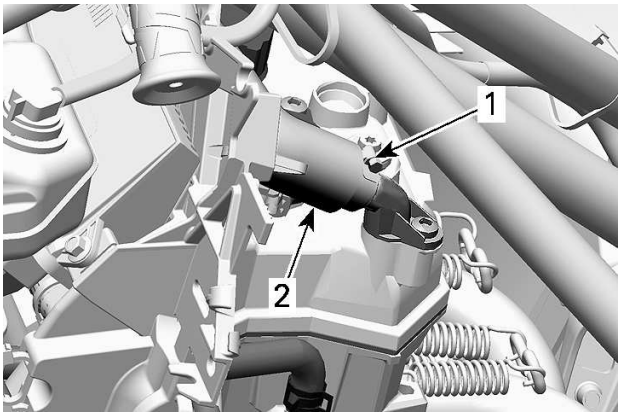


1. *Clamp*
2. *Vent tube*

4. Disconnect CAPS.
5. Remove screws securing the electrical harness to the valve cover.
6. Remove ignition coils. Refer to *Ignition Coils and Spark Plugs — GEN1 subsection.*
7. Unplug both fuel injectors.

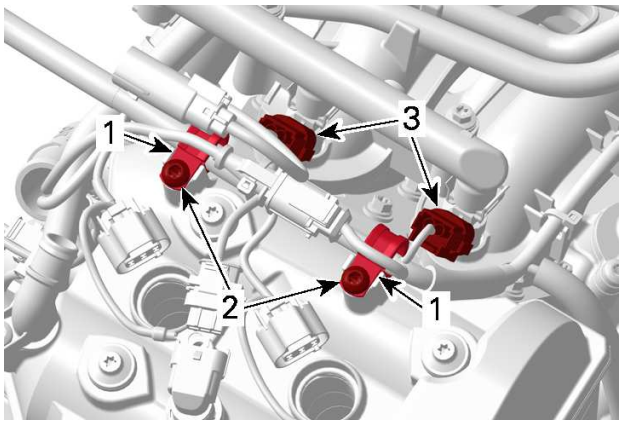


1. *Cable clamps*
2. *Retaining screws*
3. *Fuel injector connector*

8. Remove valve cover retaining screws.

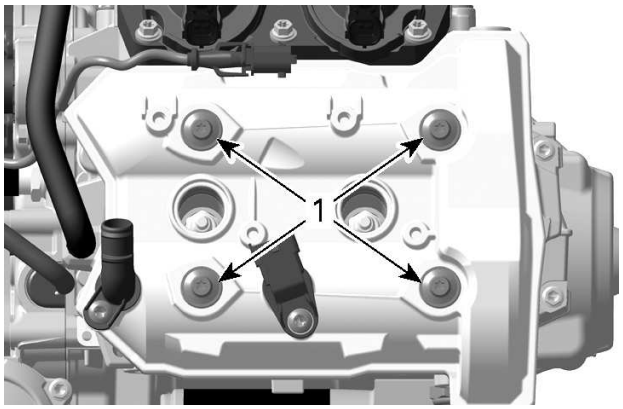


1. *Valve cover screws*

9. Lift and tilt valve cover with gasket towards front of engine.

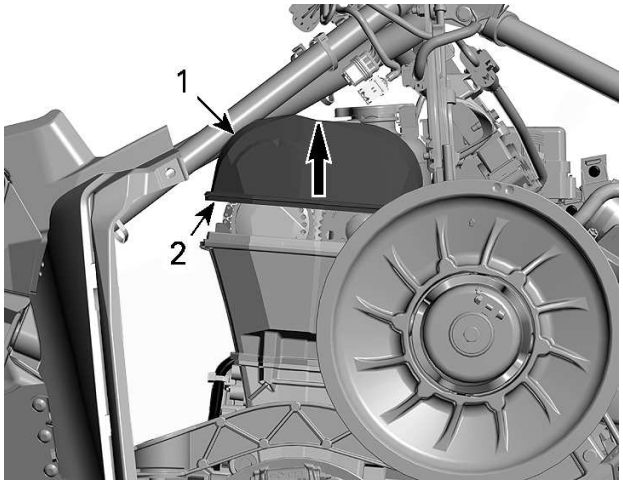


***TYPICAL***

1. *Valve cover*
2. *Gasket*

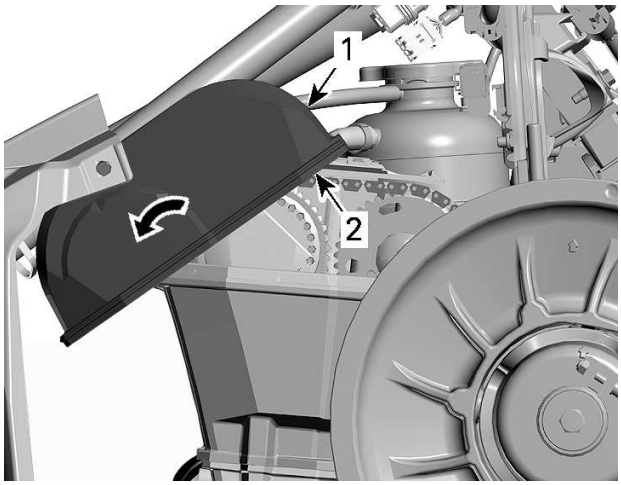


***TYPICAL***
1. *Valve cover*
2. *Gasket*

10. Pull valve cover and gasket out through LH side of vehicle.

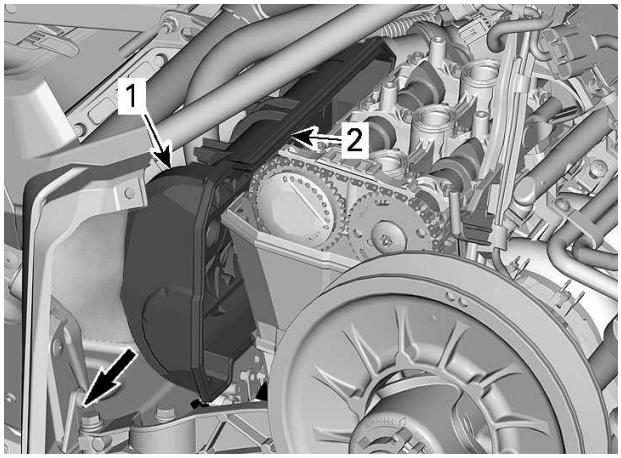


***TYPICAL***
1. *Valve cover*
2. *Gasket*

11. Remove valve cover small gaskets (spark plug tubes).

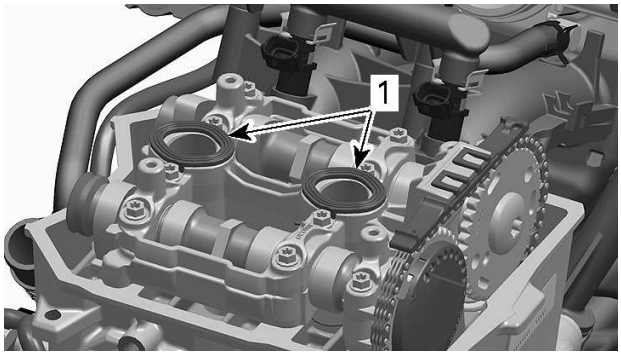


1. *Small gaskets*

### *Inspecting the Valve Cover*

Check the valve cover for cracks or other damage.

Replace defective parts.

### *Installing the Valve Cover*

The installation is the reverse of the removal procedure. However, pay attention to the following.

1. Properly fit the **NEW** small gaskets into the camshaft holder grooves.
2. Properly fit the **NEW** large gasket into valve cover groove.
3. Apply engine oil to the sealing surface of the V-ring.




***INSIDE VALVE COVER***
1. *Apply engine oil here*

4. Install valve cover.

**NOTICE**

**Adhere to the following procedure, otherwise damage to the V-ring will occur causing crankcase venting malfunction.**

1. Move valve cover towards MAG side.

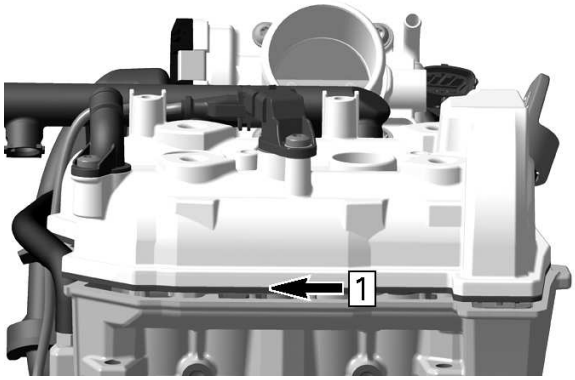


2. Put valve cover onto cylinder head.

**NOTICE**

**Make sure the valve cover gasket is well positioned in the cover groove.**

3. Push valve cover towards the PTO side to ensure the V-ring properly seals on sealing surface inside the cover.

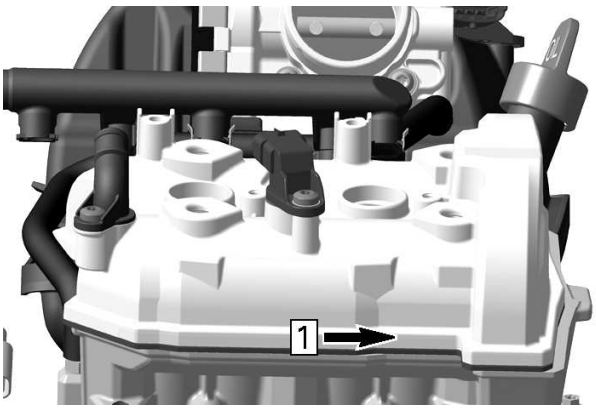


5. Install valve cover screws and tighten as per following sequence:

| Tightening Torque | |
|---|---|
| Valve cover screws | 9 ± 1 Nm<br>(80 ± 9 lbf-in) |

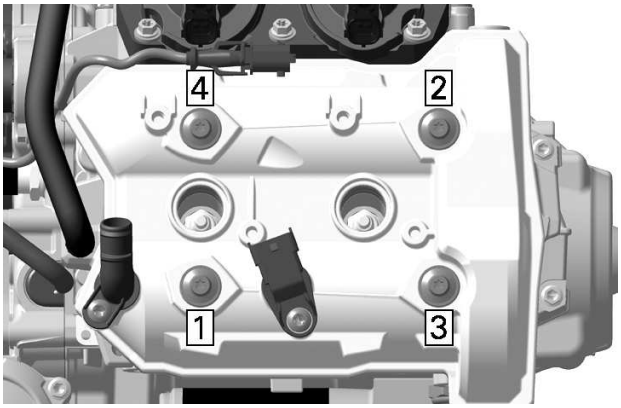


*TIGHTENING SEQUENCE*

### *Camshafts*

### *Removing the Camshaft*

1. Remove *Valve Cover*, see procedure in this subsection.
2. Lock crankshaft, refer to *Crankshaft Locking Procedure* in the *Cylinder Block - GEN1* subsection.

   Remove timing chain tensioner. Refer to *Timing Chain* subsection.
3. Remove:
   1. Breather cover

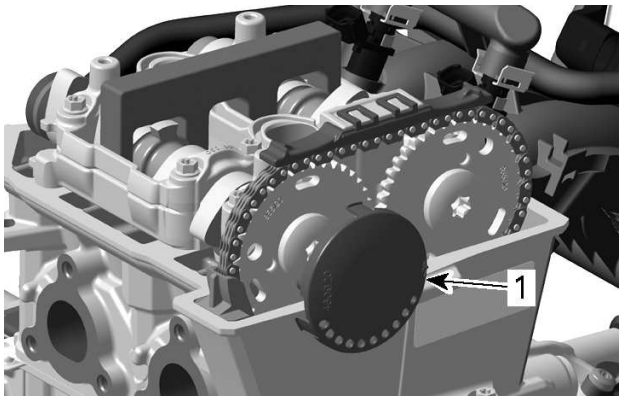


*i. Breather cover*

   2. Upper timing chain guide
   3. Timing chain guide

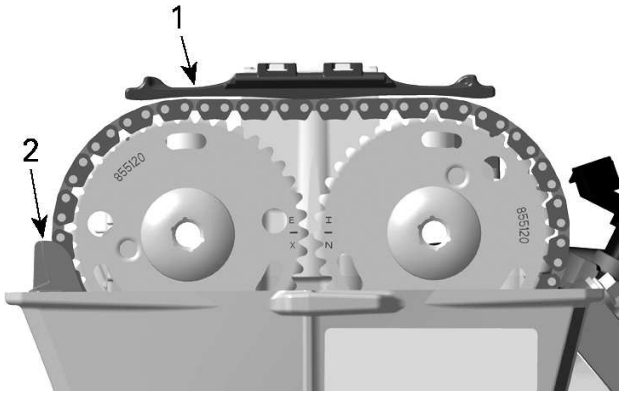


*i. Upper timing chain guide*
*ii. Timing chain guide*

4. Remove timing chain from camshaft timing gears.
5. Remove camshaft holder retaining screws (x12).

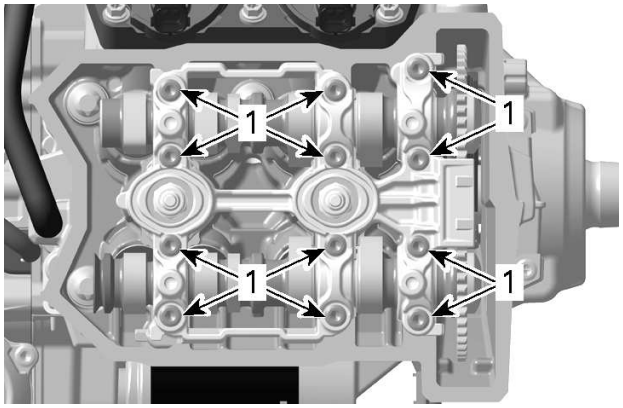


*1. Camshaft holder retaining screws*

6. Remove the camshaft holder upper half.

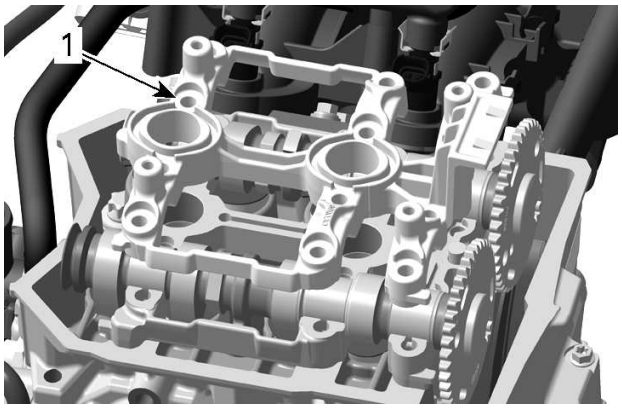


*1. Camshaft holder upper half*

7. Put timing chain aside.
8. Remove camshafts with timing gears.

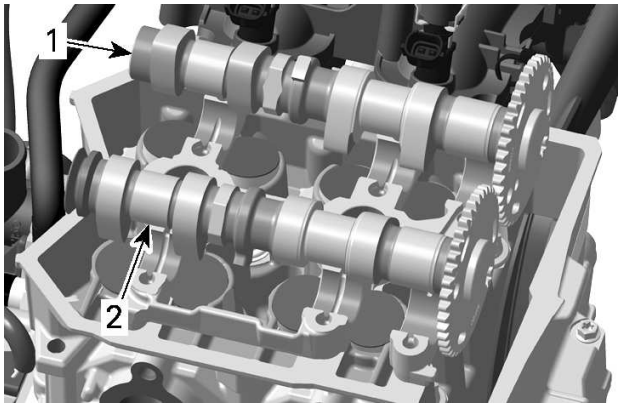


*1. Intake camshaft*
*2. Exhaust camshaft*

**NOTE:** Remove camshaft timing gears only if necessary. Refer to *Timing Chain* subsection.

### *Inspecting the Camshaft*

1. Check each lobe and bearing journal for scoring, scuffing, cracks, or other signs of wear.
2. Check V-ring if it is brittle, hard or otherwise damaged.
3. Measure camshaft bearing journal diameter and lobe height, using a micrometer.

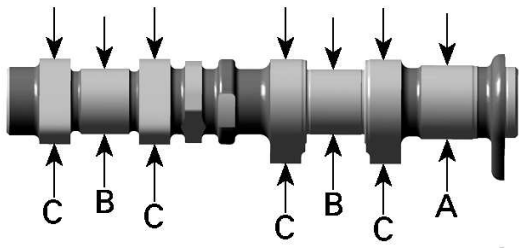


*A. Camshaft journal (PTO)*
*B. Camshaft journal (center and MAG)*
*C. Camshaft lobes*

| Camshaft Journal Diameter | |
|---|---|
| PTO Journal (A) | |
| New | 25.947 to 25.960 mm (1.0215 to 1.022 in) |
| Service Limit | 25.920 mm (1.0205 in) |
| Center and MAG Journal (B) | |
| New | 22.947 to 22.960 mm (.9034 to .9039 in) |
| Service Limit | 22.920 mm (.9024 in) |

| Camshaft Lobe Height | |
|---|---|
| Intake Camshaft (C) | |
| New | 38.70 to 38.90 mm (1.524 to 1.531 in) |
| Service Limit | 38.67 mm (1.522 in) |
| Exhaust Camshaft (C) | |
| New | 39.40 to 39.60 mm (1.551 to 1.559 in) |
| Service Limit | 39.38 mm (1.55 in) |

Replace parts if necessary.

For camshaft journal radial clearance and camshaft holder bearing diameter refer to *Camshaft Holder* in this subsection.

4. Check timing chain guide for wear, cracks or deformation. Replace as required.
5. Replace timing chain guide if any groove caused by timing chain exceeds service limit.

| Chain Guide Groove Depth | |
|---|---|
| Service Limit | 1 mm (.039 in) |

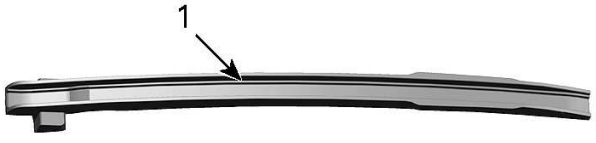


*1. Timing chain guide*

### *Installing the Camshaft*

The installation is the reverse of the removal procedure. However, pay attention to the following.

1. Ensure crankshaft is still locked.
2. Apply engine oil on camshaft bearings.

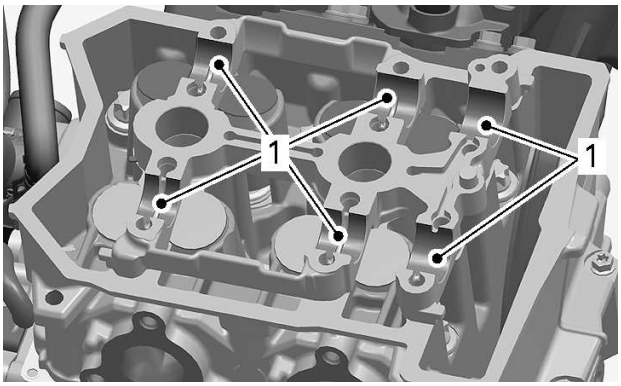


*1. Areas where to apply engine oil*

**NOTE:** The camshafts are not identical. Any mix-up of the components would lead to engine damage. The exhaust camshaft has a machined area on MAG side for the V-ring.

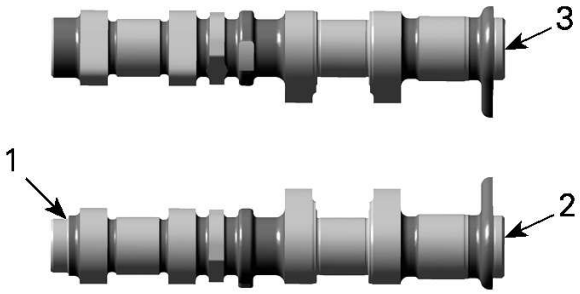


*1. Machined area*
*2. Exhaust camshaft*
*3. Intake camshaft*

3. If removed, reinstall camshaft timing gears on camshafts. Refer to *Camshaft Timing Gears* in the *Timing Chain* subsection.
4. Apply engine oil on camshaft journal diameter.
5. Install exhaust camshaft assembly with mark "EX" parallel to cylinder head gasket.

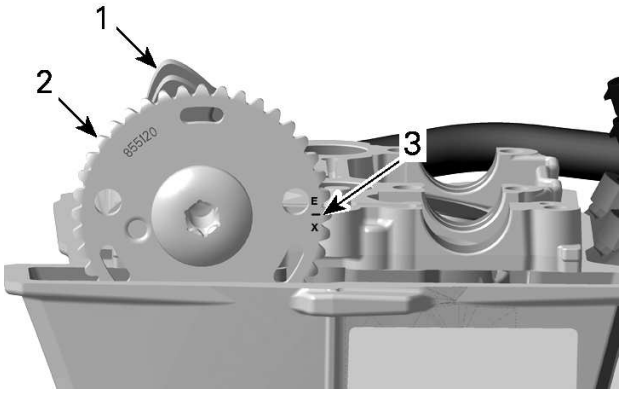


*1. Exhaust camshaft*
*2. Camshaft timing gear*
*3. Mark "EX"*

6. Install intake camshaft assembly with mark "IN" parallel to cylinder head gasket.

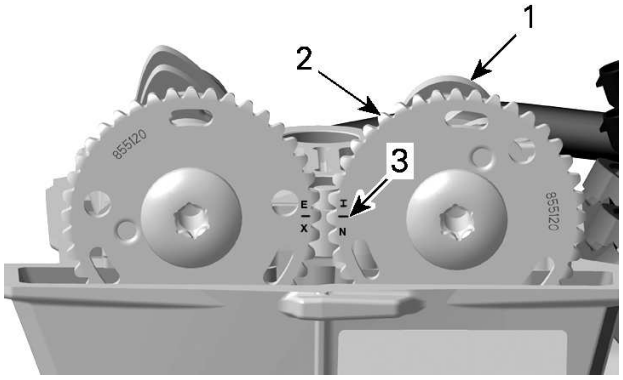


*1. Intake camshaft*
*2. Camshaft timing gear*
*3. Mark "EX"*

7. Install the camshaft holder upper half, then tighten screws as per following sequence:

| Tightening Torque | | |
|---|---|---|
| Camshaft holder screws | Step A | 5 ± 0.5 Nm (44 ± 4 lbf-in) |

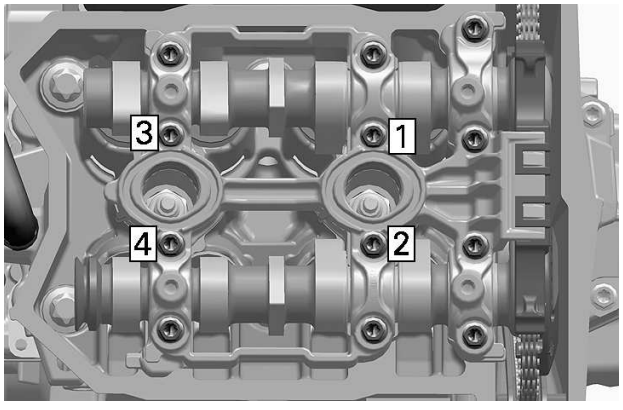


***CAMSHAFT HOLDER TIGHTENING SEQUENCE - STEP A***

| Tightening Torque | | |
|---|---|---|
| Camshaft Holder Screws | Step B | 9 ± 1 Nm (80 ± 9 lbf-in) |

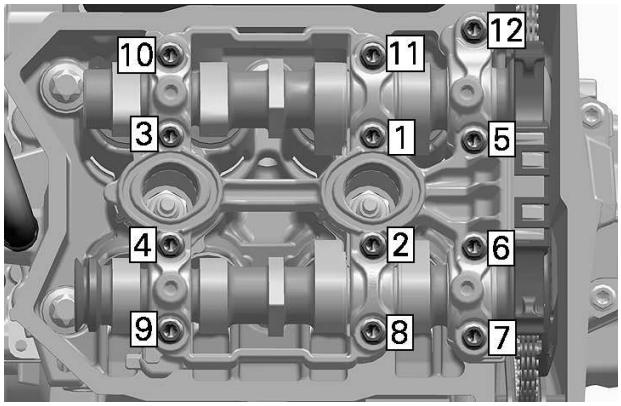


*CAMSHAFT HOLDER TIGHTENING SEQUENCE - STEP B*

**NOTE:** After reassembly of camshafts is completed, check if camshafts can be turned easily.

8. Lock camshafts.

| | |
|---|---|
| **Camshaft locking tool (600 ACE) (P/N 529036306)** |  |

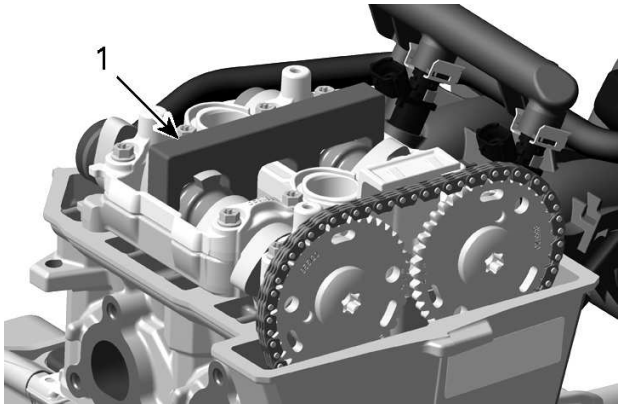


*1. Camshaft locking tool*

9. Lift timing chain out of timing chain compartment.
10. Pull timing chain up on exhaust side and install it on the exhaust camshaft timing gear.

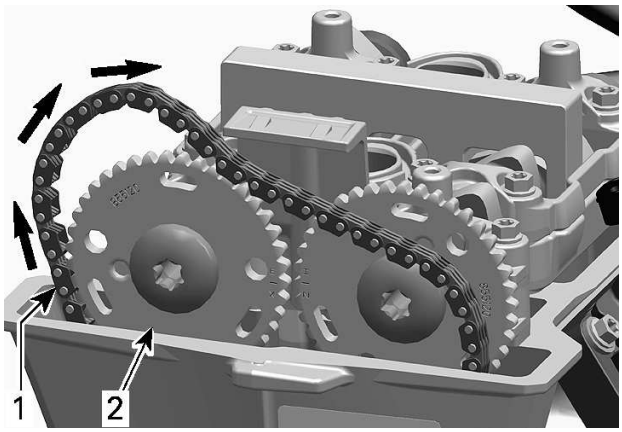


*1. Timing chain*
*2. Exhaust camshaft timing gear*

11. Pull timing chain towards intake side and install it on the intake camshaft timing gear.

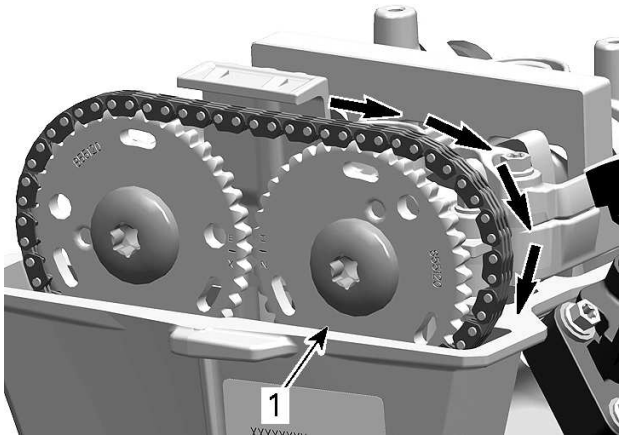


12. Install timing chain guide.

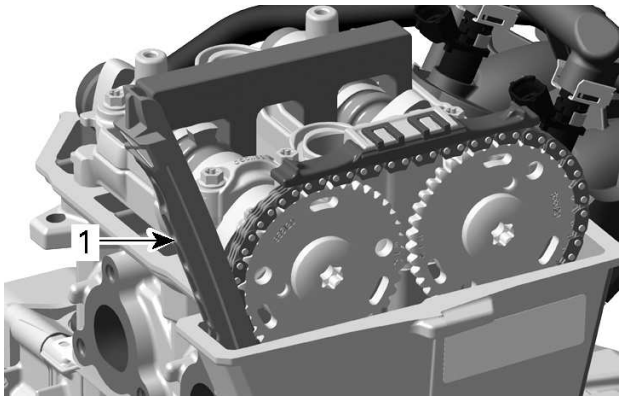


*1. Timing chain guide*

13. Install upper timing chain guide on camshaft holder.

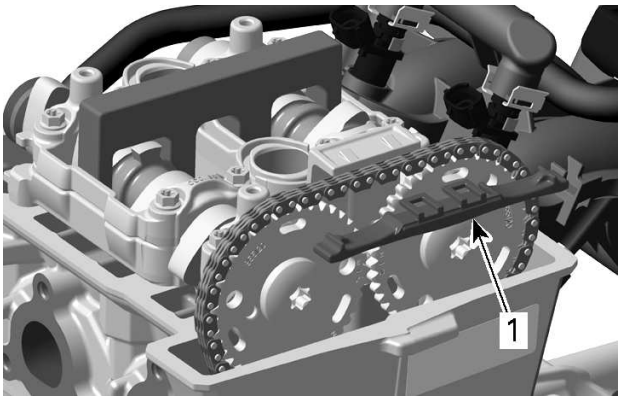


*1. Upper timing chain guide*

14. Install *Timing Chain Tensioner*, refer to *Timing Chain* subsection.
15. Ensure marks on camshaft timing gears are still aligned. If not, repeat procedure.

**NOTICE**

**After installation of timing chain tensioner, the marks "IN" on intake and "EX" on exhaust camshafts must be aligned.**

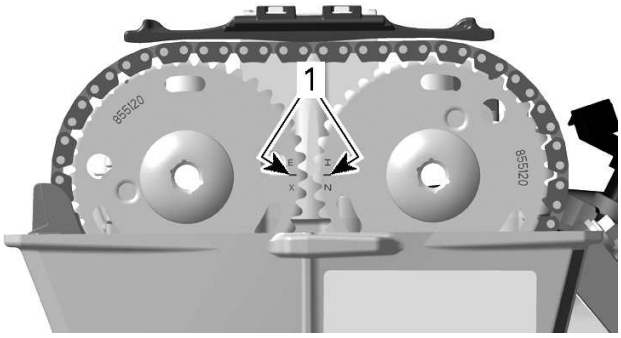


***CAMSHAFT TIMING GEARS***
*1. Marks must be aligned*

16. Install breather cover.

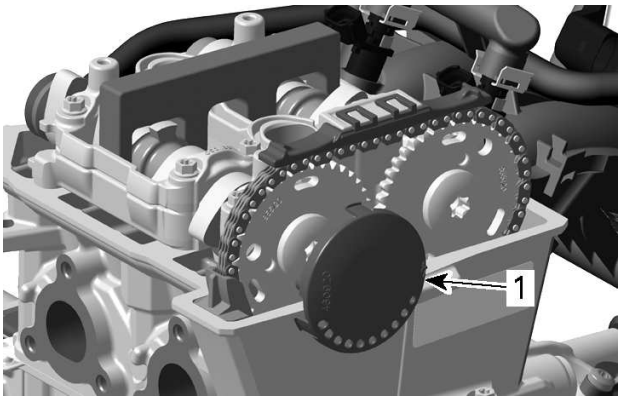


*1. Breather cover*

17. Remove camshaft locking tool.

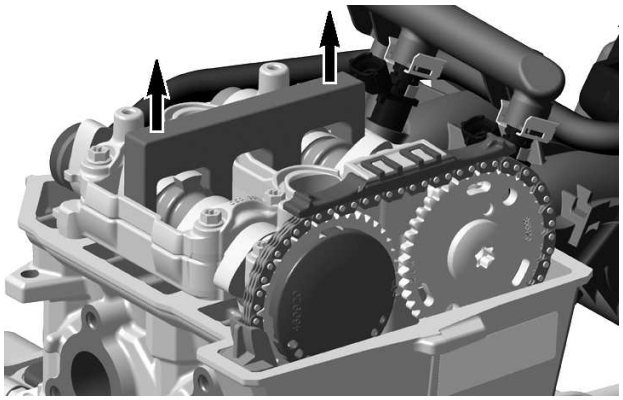


*1. Camshaft locking tool removal*

18. Remove crankshaft locking tool.

### *Camshaft Holder*

#### *Removing the Camshaft Holder*

1. Remove camshafts, see procedure in this subsection.
2. Remove the camshaft holder lower half with gaskets from cylinder head.
3. Remove and discard gaskets from camshaft holder halves.

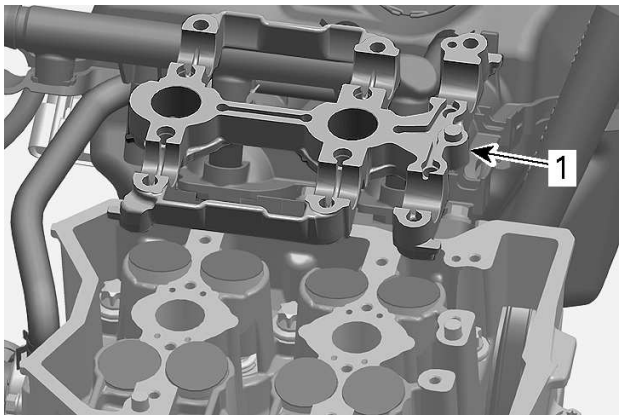


*1. Camshaft holder lower half*

#### *Inspecting the Camshaft Holder*

1. Check camshaft holder for scoring, scuffing, cracks, or other signs of wear.
2. Make sure oil orifices are not clogged. Blow them out with pressurized air.

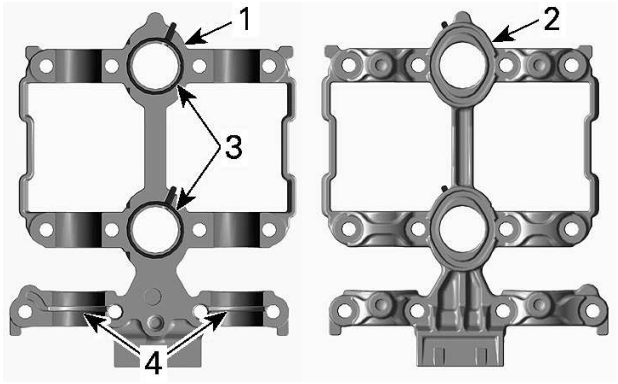


*1. Camshaft holder upper half - view from beneath*
*2. Camshaft holder upper half - view from above*
*3. Gaskets*
*4. Oil orifices*

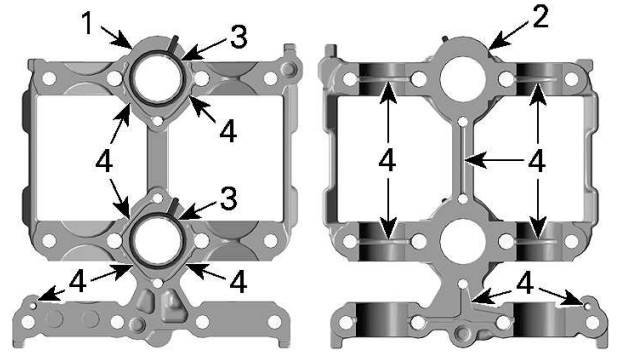


*1. Camshaft holder lower half - view from beneath*
*2. Camshaft holder lower half - view from above*
*3. Gaskets*
*4. Oil orifices*

3. Install camshaft holder on cylinder head.
4. Tighten camshaft holder screws to specification, refer to *Installing the Camshaft* in this subsection.
5. Measure camshaft holder bearing diameter.

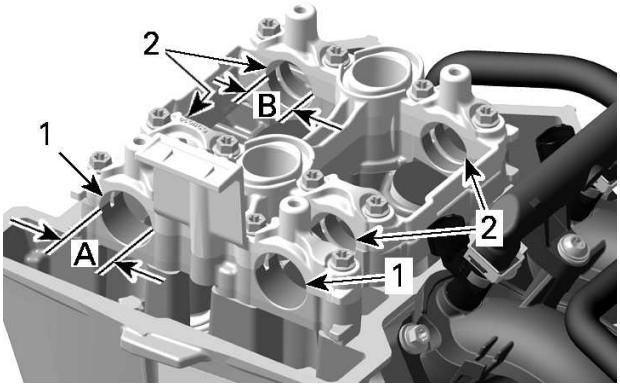


***CAMSHAFT HOLDER BEARINGS***
*1. PTO bearings*
*2. Center and MAG bearings*
*A. Diameter PTO bearing*
*B. Diameter center and MAG bearing*

| Camshaft Holder Bearing Diameter | |
|---|---|
| PTO Bearing | |
| New | 26.000 to 26.021 mm (1.024 to 1.024 in) |
| Service Limit | 26.050 mm (1.026 in) |
| Center and MAG Bearing | |
| New | 23.000 to 23.021 mm (.906 to .906 in) |
| Service Limit | 23.050 mm (.907 in) |

6. Measure the clearance between camshaft journals and camshaft holder, using the plastic feeler gauge.

**NOTE:** The plastic feeler gauge is available at automotive parts retailer.

7. Install camshaft holder lower half on cylinder head.
8. Place camshafts in lower half of camshaft holder and apply a plastic-gauge on the camshaft bearing journal.

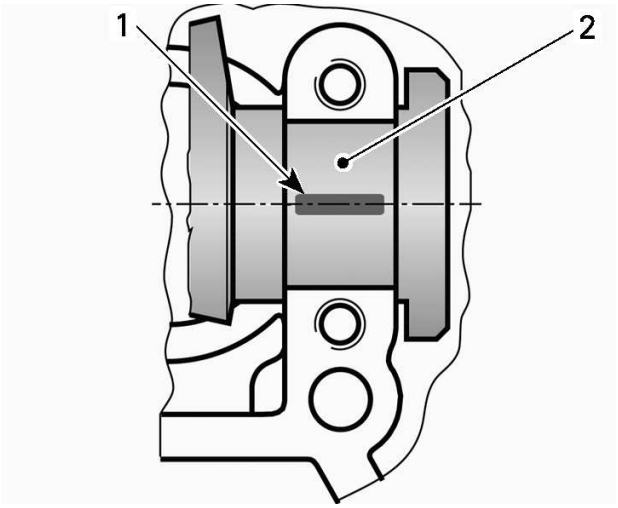


***TYPICAL***
*1. Plastic gauge*
*2. Camshaft bearing journal*

9. Install camshaft holder upper half in its proper position and tighten screws to specification, refer to *Installing the Camshaft* in this subsection.
10. Unfasten camshaft holder.

11. Measure the maximum width of the pressed plastic gauge with the corresponding graduated scale.

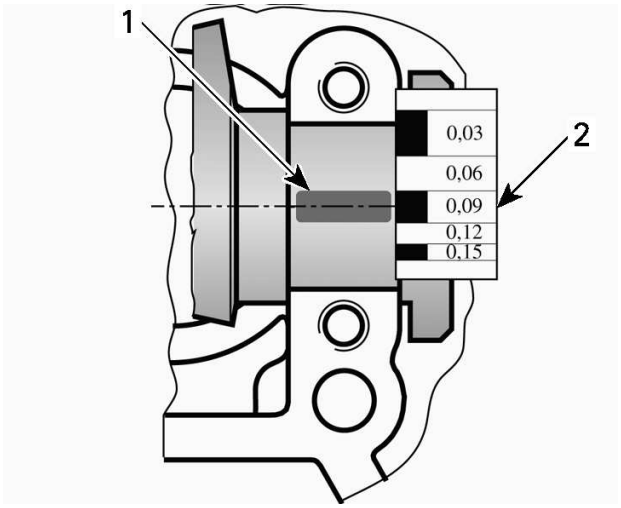


***TYPICAL***
*1. Pressed plastic gauge*
*2. Graduated scale*

| Camshaft Journal Radial Clearance | |
|---|---|
| PTO, Center and MAG Bearing | |
| New | 0.040 to 0.074 mm (.0016 to .0029 in) |
| Service Limit | 0.090 mm (.0035 in) |

12. Replace parts if necessary.

### *Installing the Camshaft Holder*

Install camshaft holder lower half.

Continue procedure as explained in *Installing the Camshaft* in this subsection.

### *Hydraulic Valve Lifters*

### *Removing the Hydraulic Valve Lifter*

**NOTE:** Hydraulic valve lifter are maintenance free.

See procedures in this subsection to remove the following:

– Valve cover
– Camshafts
– Camshaft holder.

Pull hydraulic valve lifter out of cylinder head.

**NOTE:** When disassembling the hydraulic valve lifter, it is strongly recommended to note their original position.

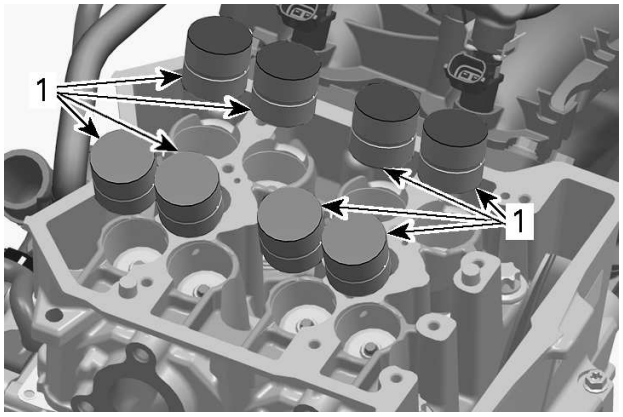


*1. Hydraulic valve lifter*

### *Inspecting the Hydraulic Valve Lifter*

1. Check surface of hydraulic valve lifter for scoring or other damage.
2. Measure valve lifter diameter. Replace if out of specification.

| Hydraulic Valve Lifter | |
|---|---|
| New | 28.354 to 28.370 mm (1.1163 to 1.1169 in) |
| Service Limit | 28.340 mm (1.1157 in) |
| Hydraulic Valve Lifter Radial Clearance | |
| Service Limit | 0.100 mm (.0039 in) |

### *Installing the Hydraulic Valve Lifter*

The installation is the reverse of the removal procedure. However, pay attention to the following.

Apply engine oil on the outside diameter of the hydraulic valve lifter.

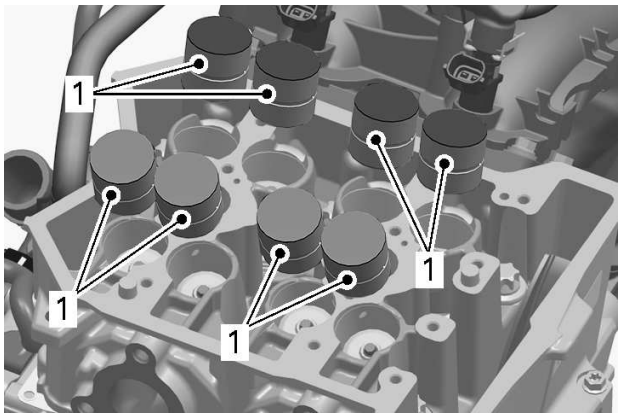


*1. Apply engine oil on outer diameter*

## *Cylinder Head*

### *Removing the Cylinder Head*

1. Remove engine from vehicle. Refer to *Engine Removal and Installation* subsection.
2. See procedures in this subsection to remove:
   - Valve cover
   - Camshafts
   - Camshaft holder
   - Hydraulic valve lifters.
3. Remove M6 cylinder head screws.

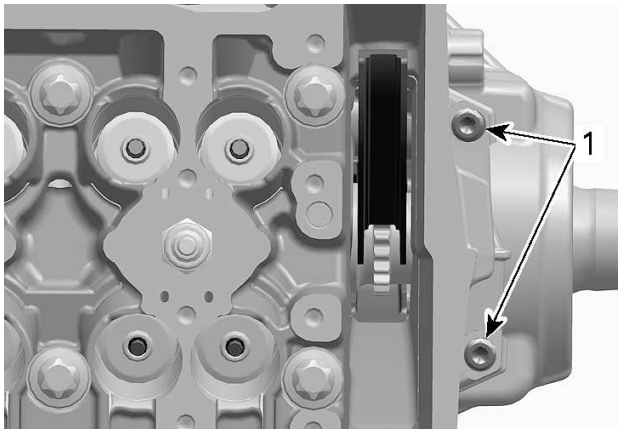


*1. Remove M6 cylinder head screws*

4. Remove and discard M9 cylinder head screws.

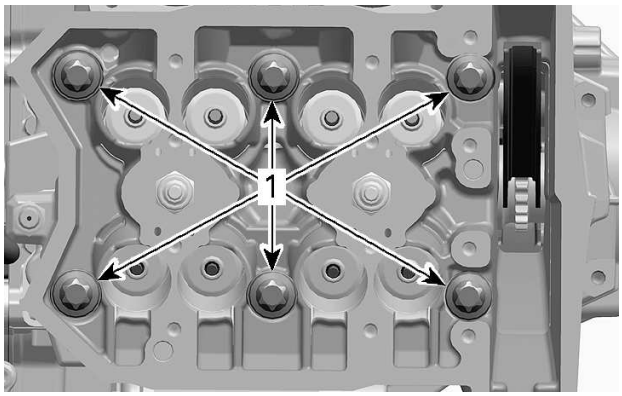


*1. Remove M9 cylinder head screws*

5. Pull cylinder head off the cylinder block.
6. Remove and discard cylinder head gasket.

### *Cleaning the Cylinder Head*

1. Remove carbon deposits from combustion chambers, exhaust ports and piston tops.
2. Clean cylinder head, especially cylinder head screw surface from oil spillage.
3. Blow out the oil orifices with pressurized air and make sure they are not clogged.

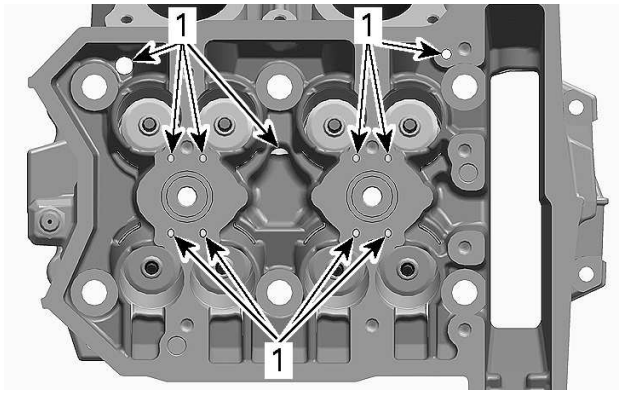


*1. Oil orifices*

### *Inspecting the Cylinder Head*

1. Check for cracks between valve seats or other damage, if so, replace cylinder head.
2. Check cylinder head mating surface for flatness using a straight edge.
3. Check hydraulic valve lifter bores for scoring or other damage, if so, replace cylinder head.

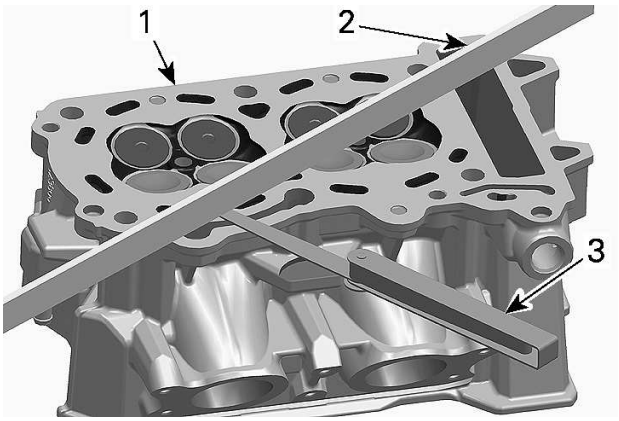


1. *Cylinder head*
2. *Straight edge*
3. *Feeler gauge*

4. Check for cylinder head warping.

| Cylinder Head Warpage | |
|---|---|
| Maximum | 0.15 mm (.0059 in) |

5. If warping exceeds specification, resurface the cylinder head as follows.
6. Use a 400 - 600 grit wet sandpaper on a surface plate and gently grind off the mating surface.

**NOTE:** To ensure an even surface, rotate cylinder head several times during resurfacing.

7. Replace cylinder head, if resurfacing fails.

### *Installing the Cylinder Head*

The installation is the reverse of the removal procedure. However, pay attention to the following.

1. Install a **NEW** cylinder head gasket.

**NOTICE**

**Each installation of the cylinder head requires a NEW cylinder head gasket. Using a gasket twice would cause engine damage.**

2. Install cylinder head on the cylinder block.
3. Install **NEW** M9 cylinder head screws.

**NOTICE**

**This assembly uses stretch screws. Always use NEW screws and strictly adhere to the tightening procedure.**

4. Tighten cylinder head screws as follows:

**NOTE:** Always perform step A on all M9 cylinder head screws before going to step B.

| Tightening Torque | | |
|---|---|---|
| Cylinder head M9 screws | Step A | 20 ± 2 Nm (15 ± 1 lbf-ft) |
| | Step B | Additional 150° ± 5° |

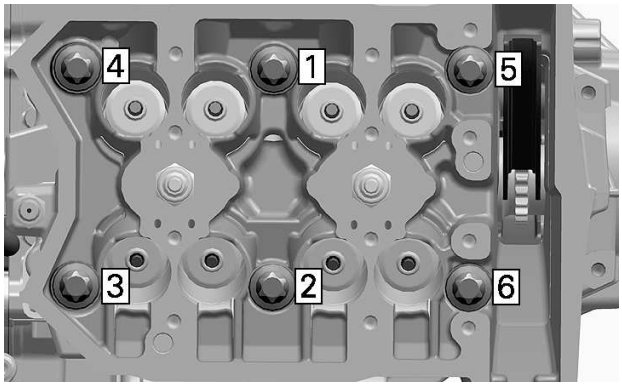


***M9 SCREWS TIGHTENING SEQUENCE***

**NOTE:** Use a torque angle gauge to carry out **step B**.

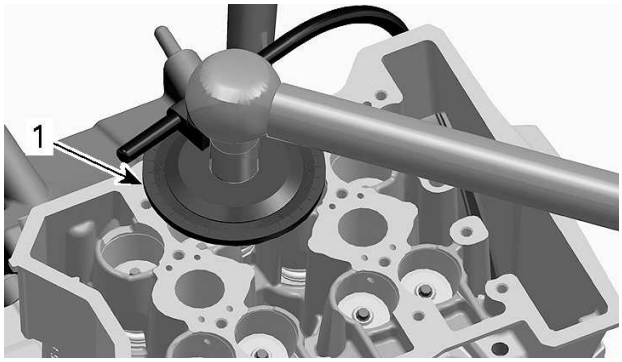


1. *Torque angle gauge*

5. Install M6 screws. Tighten as follows.

| Tightening Torque | |
|---|---|
| Cylinder head M6 screws | 9 ± 1 Nm (80 ± 9 lbf-in) |

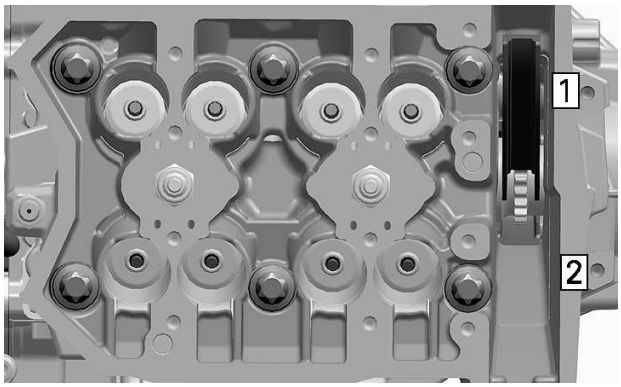


*M6 SCREWS TIGHTENING SEQUENCE*

### *Valve Springs*

#### *Removing the Valve Spring*

1. Remove *Cylinder Head*, see procedure in this subsection.
2. Compress valve spring.

| | |
|---|---|
| **Valve spring compressor (P/N 529035724)** |  |
| **Valve spring compressor cup (P/N 529036209)** |  |

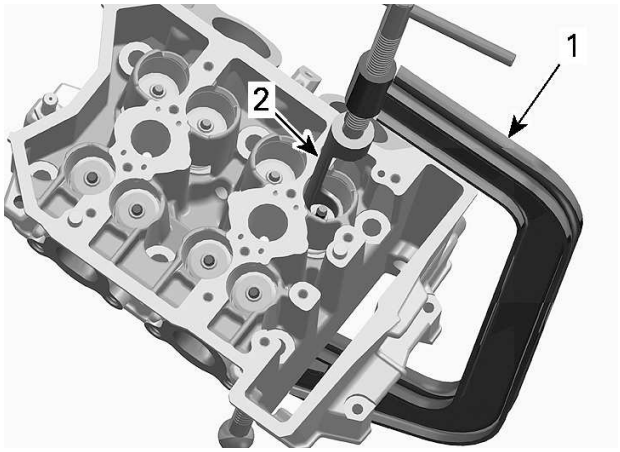


1. *Valve spring compressor clamp*
2. *Valve spring compressor cup*

3. Remove valve cotters.
4. Withdraw valve spring compressor tools.
5. Remove valve spring retainer and valve spring.

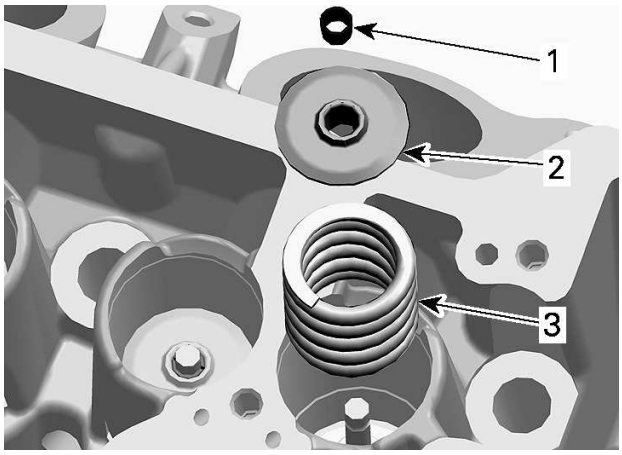


1. *Valve cotters*
2. *Valve spring retainer*
3. *Valve spring*

**NOTE:** Identify the position of each part very carefully, so it can be reinstalled in its original place.

#### *Inspecting the Valve Spring*

1. Check valve spring for rust, corrosion or other visible damage.
2. Check valve spring free length and straightness.

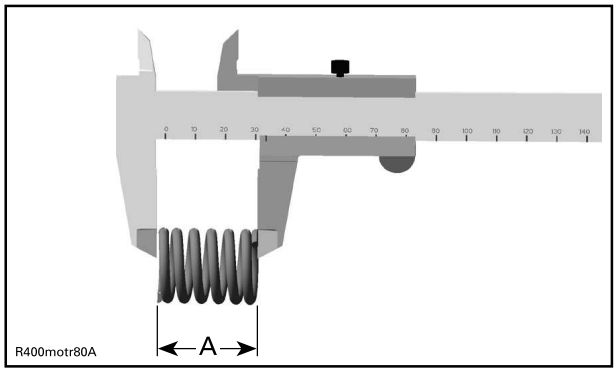


*A. Spring free length*

| Valve Spring Free Length | |
|---|---|
| New | 31.35 mm (1.2343 in) |
| Service limit | 29.50 mm (1.1614 in) |

Replace valve spring, if out of specification.

#### *Installing the Valve Spring*

1. The installation is the reverse of the removal procedure. However, pay attention to the following.

**NOTE:** Ensure to reinstall all parts in their original position as marked during removal.

2. Apply some grease on valve cotters, so that they remain in place while releasing the valve spring.
3. Make sure valve cotters are properly engaged into valve stem groove.

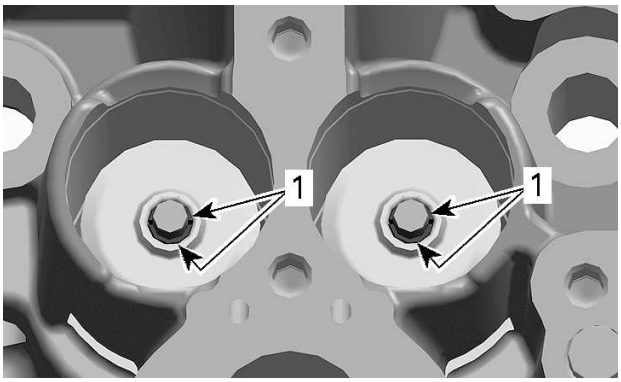


*1. Valve cotters*

4. After spring is installed, ensure it is properly locked by lightly tapping on valve stem end with a soft hammer so that valve opens and closes a few times.

**NOTICE**

**Improperly locked valve spring will cause severe engine damage and hitting the valve stem end with excessive force could damage the valve.**

### *Valves*

#### *Removing the Valve*

1. Remove *Valve Spring*, see procedure in this subsection.
2. Push on the valve stem, then pull valves out of cylinder head.

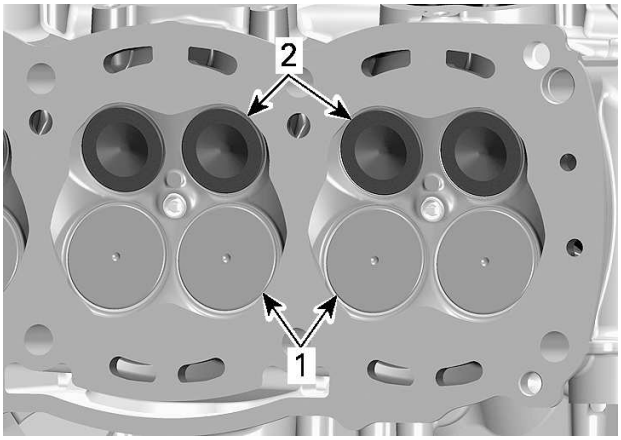


*1. Intake valves 29 mm*
*2. Exhaust valves 25 mm*

3. Remove and discard valve stem seal using special pliers.

| **Valve stem seal pliers** |  |
|---|---|

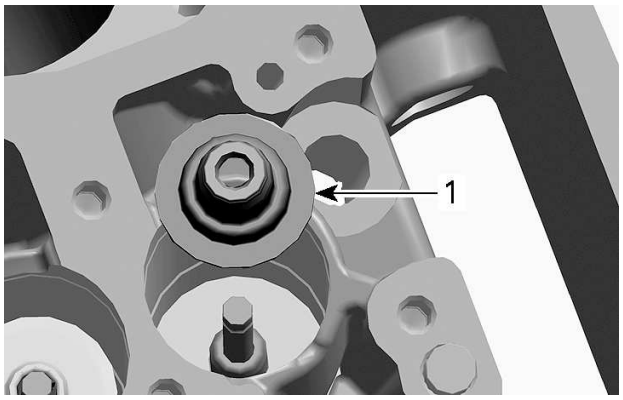


*1. Valve stem seal*

**NOTE:** Identify the position of each part very carefully, so it can be reinstalled in its original place.

#### *Inspecting the Valve*

Inspect valve surface for abnormal stem wear and bending.

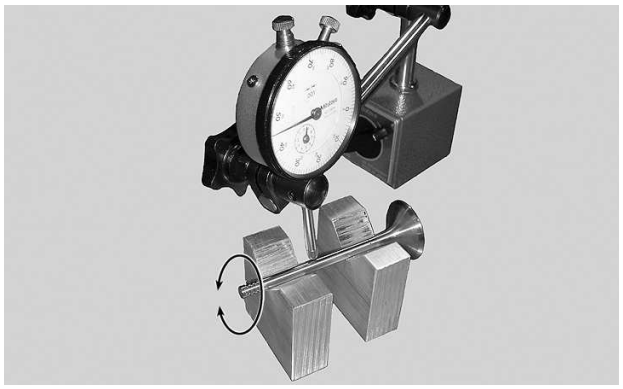

| **Valve Out Of Round Intake and Exhaust Valve** | |
|---|---|
| New | 0.005 mm (.0002 in) |
| Service Limit | 0.060 mm (.0024 in) |

Replace valve if out of specification.

#### *Valve Stem and Valve Guide Clearance*

1. Measure valve stem at three places, using a micrometer.

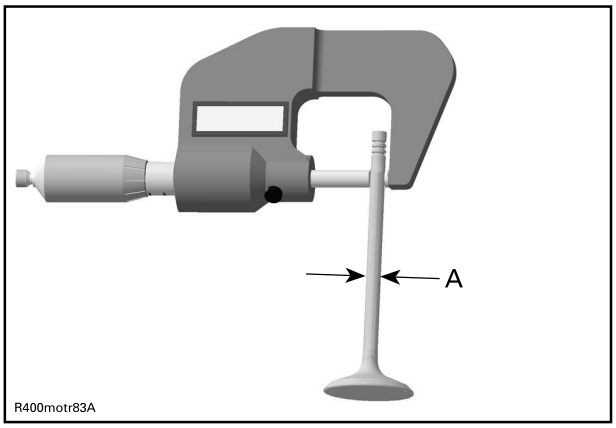


*A. Valves stem diameter*

| Valve Stem Diameter | |
|---|---|
| Intake Valve | |
| New | 4.958 to 4.972 mm (.1952 to .1957 in) |
| Service Limit | 4.940 mm (.1945 in) |
| Exhaust Valve | |
| New | 4.956 to 4.970 mm (.1951 to .1957 in) |
| Service Limit | 4.940 mm (.1945 in) |

2. Replace valve if stem is out of specification or if its surface is damaged or worn.
3. Measure valve guide inner diameter, using a small bore gauge.

**NOTE:** Clean valve guide from carbon deposits before measuring.

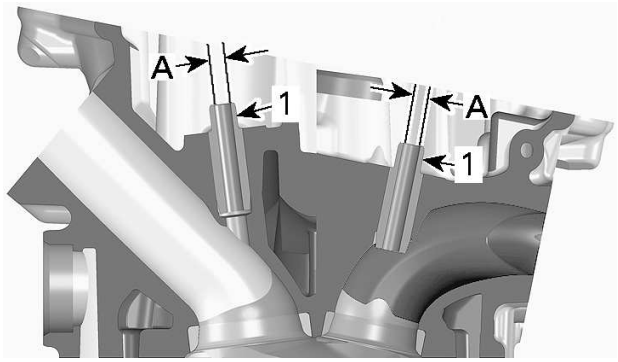


*1. Valve guides*
*A. Valve guide inner diameter*

| Valve Guide Inner Diameter | |
|---|---|
| New | 4.992 to 5.012 mm (.1965 to .1973 in) |
| Service Limit | 5.050 mm (.1988 in) |

4. Replace cylinder head, if valve guide is out of specification.

***Valve Face and Seat***

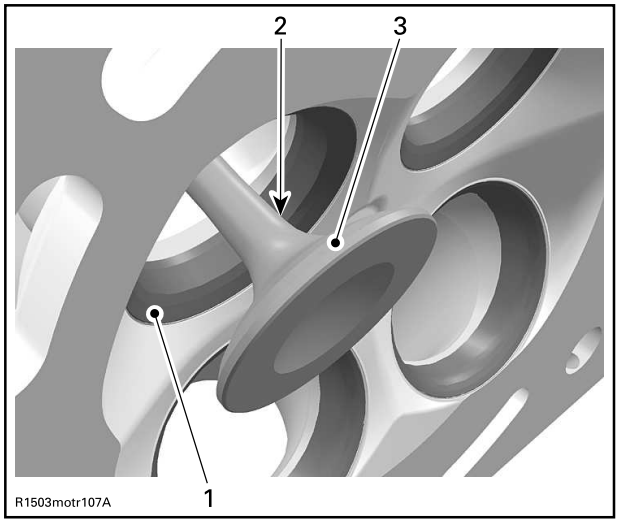


***TYPICAL***
*1. Valve seat*
*2. Exhaust valve contaminated area*
*3. Valve face (contact surface to valve seat)*

1. Check valve face and seat for burning, pitting and other signs of damage.
2. Check if valve seats properly in cylinder head. Proceed as follows.

| **Valve holder** | 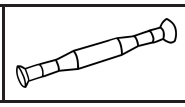 |
|---|---|

1. Apply some lapping compound on valve face and work valve on its seat with a lapping tool.

**NOTE:** The location of contact area should be in center of valve face.

2. Repeat procedure until valve seat and valve face fit together.
3. Measure valve seat contact width, using a caliper.




Midwest Manuals
Green Manuals
Paperless Manuals
For a Better Tomorrow
www.green-manuals.com
If you bought this manual from any other seller please leave them
NEGATIVE feedback and notify us at bestshopmanuals@gmail.com

*A. Valve face contact width*
*B. Valve seat contact width*

| Valve Seat Contact Width | |
|---|---|
| Intake Valve | |
| New | 1.05 to 1.35 mm (.041 to .053 in) |
| Service Limit | 1.70 mm (.067 in) |
| Exhaust Valve | |
| New | 1.25 to 1.45 mm (.049 to .057 in) |
| Service Limit | 1.80 mm (.071 in) |

Replace parts if out of specification.

### *Installing the Valve*

1. The installation is the reverse of the removal procedure. However, pay attention to the following.

**NOTE:** Ensure to reinstall all parts in their original position as marked during removal.

2. Install a **NEW** valve stem seal whenever valve is removed.
3. Apply engine oil on valve stem and carefully slide through cylinder head and valve stem seal.

**NOTICE**

**Be careful when passing the valve stem through the sealing lip of the seal.**

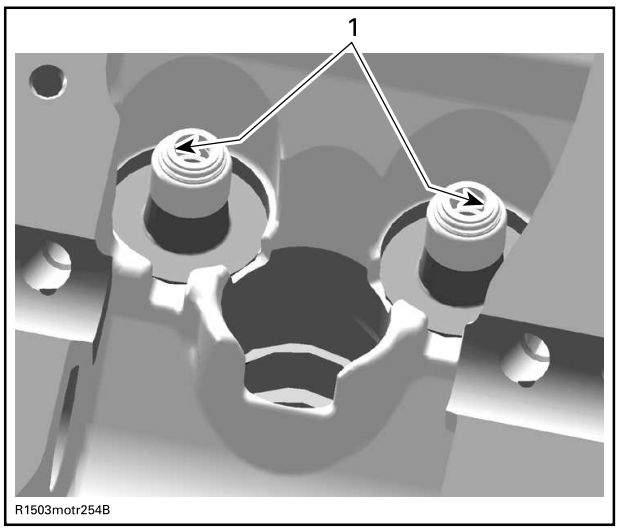


***TYPICAL***
*1. Sealing lips of valve stem seal*

4. Install *Valve Spring*. See procedure in this subsection.
5. Install all other removed parts.

# Cylinder Head - 900 ACE - GEN1



## SERVICE TOOLS

| Description | Part Number | Page |
|---|---|---|
| CAMSHAFT LOCKING TOOL(900 ACE) | (P/N 529036206) | 188 |
| ENGINE LEAK DOWN TEST KIT | (P/N 529035661) | 179 |
| FLUKE 115 MULTIMETER | (P/N 529035868) | 181–182 |
| VALVE SPRING COMPRESSOR CUP | (P/N 529036209) | 195 |
| VALVE SPRING COMPRESSOR | (P/N 529035724) | 195 |

## SERVICE PRODUCTS

| Description | Part Number | Page |
|---|---|---|
| DIELECTRIC GREASE | | 183 |

### *Valve Cover*

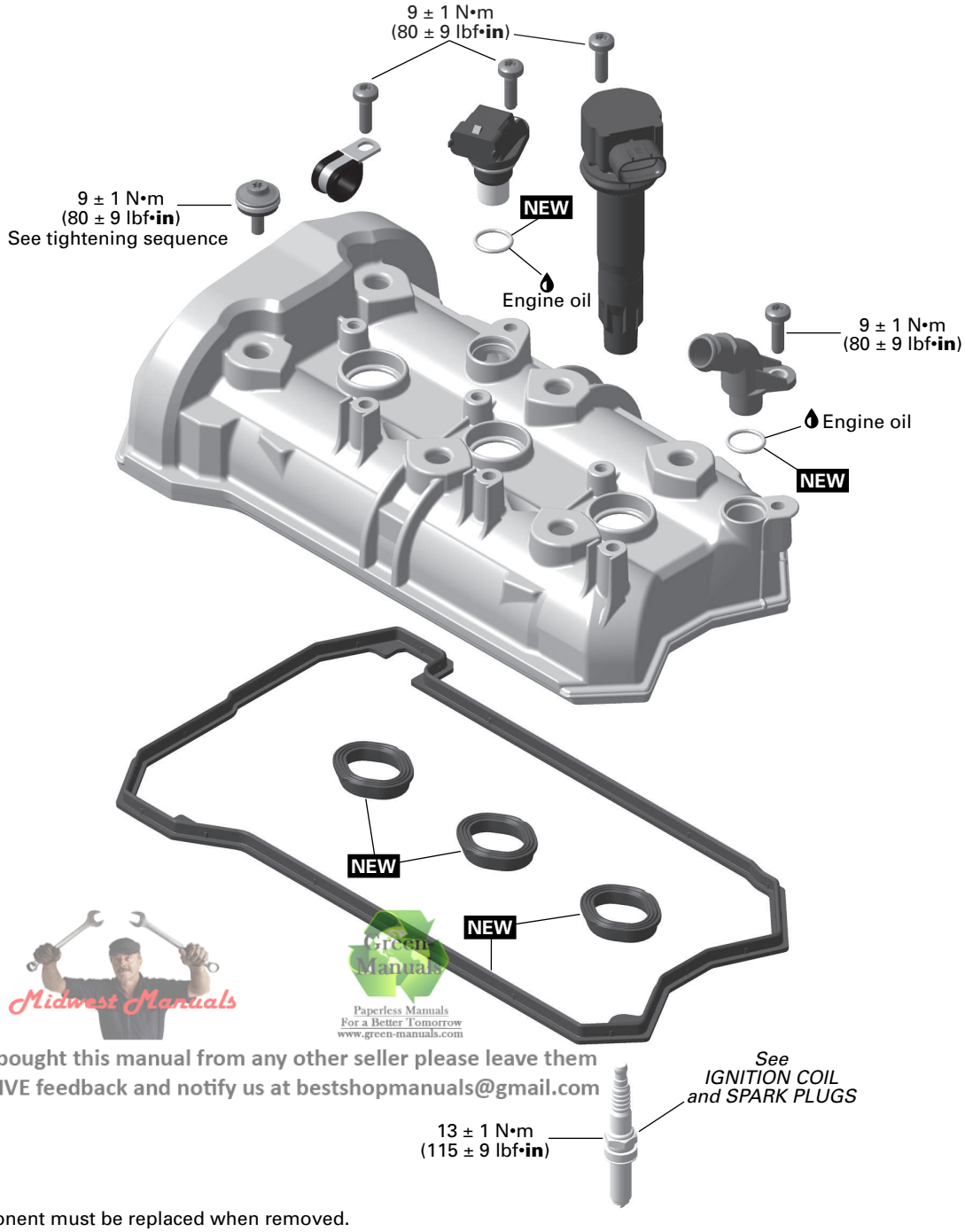


Midwest Manuals
Green Manuals
Paperless Manuals
For a Better Tomorrow
www.green-manuals.com
If you bought this manual from any other seller please leave them
NEGATIVE feedback and notify us at bestshopmanuals@gmail.com

**NEW** = Component must be replaced when removed.

T

### *Camshafts*

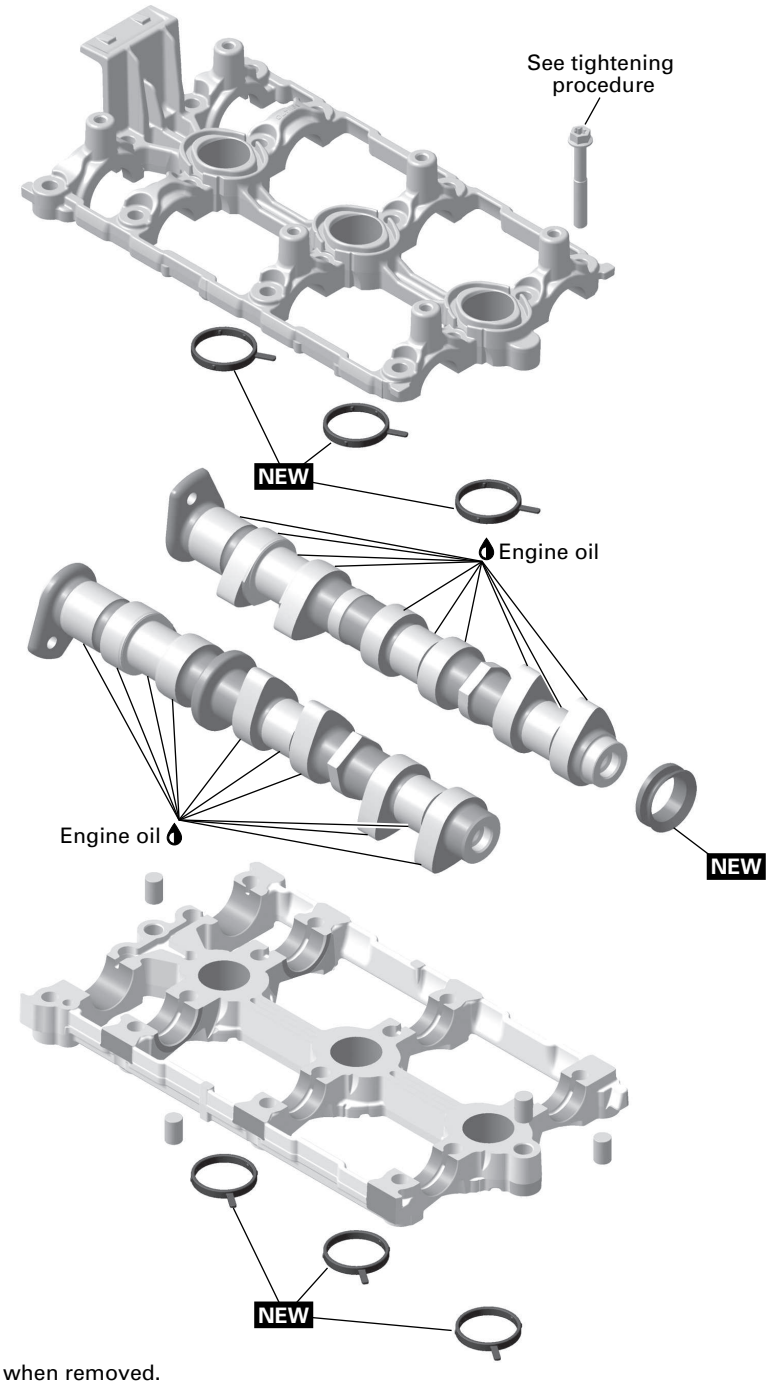


**NEW** = Component must be replaced when removed.

### *Cylinder Head*

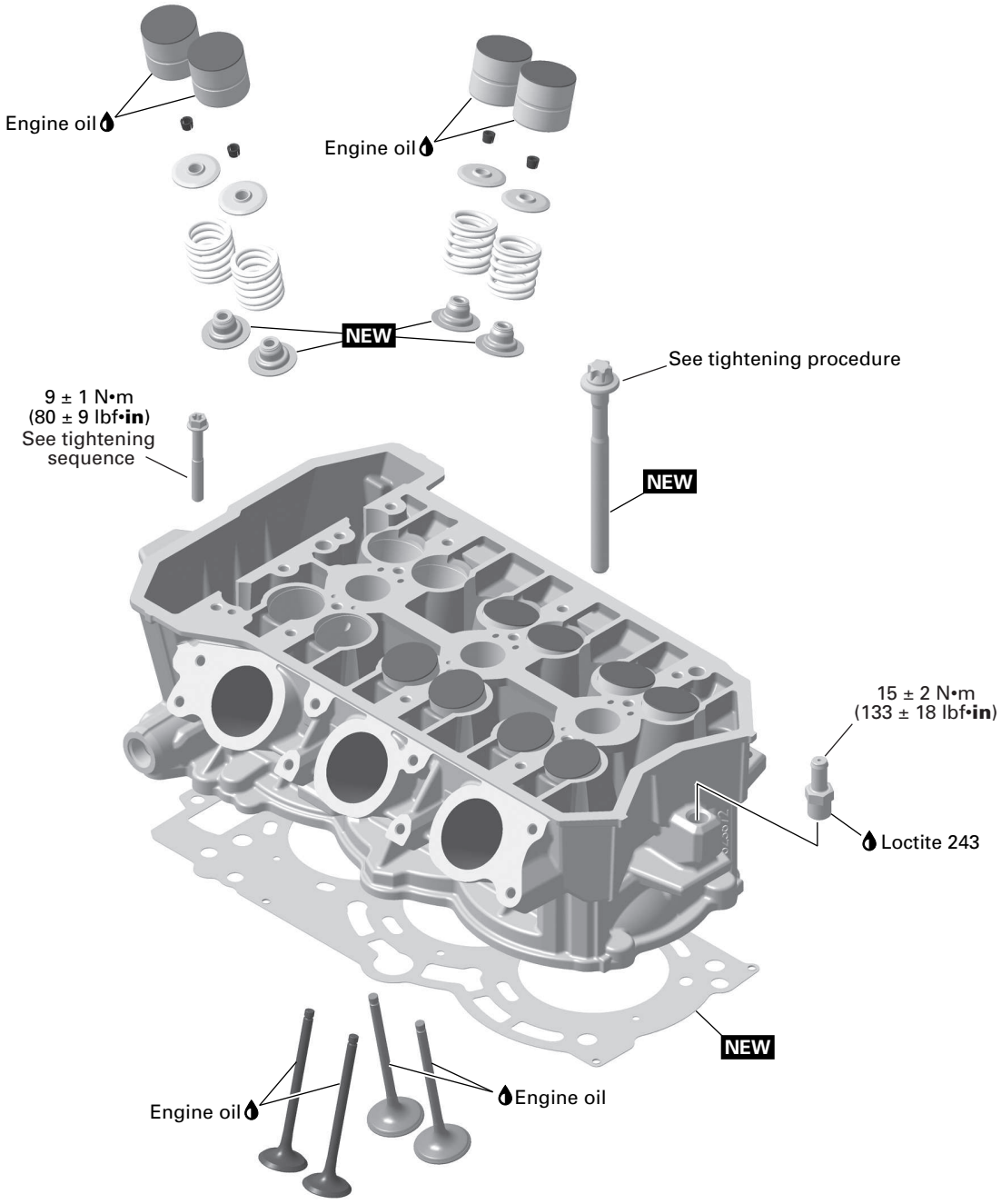


**NEW** = Component must be replaced when removed.

## General

This section refers to the following ECM:

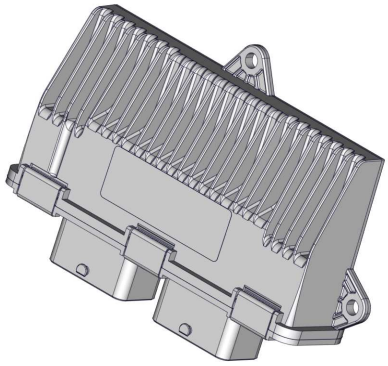

*ECM GEN1 – ME17*

**NOTE:** For a better understanding, some illustrations are taken with engine out of the vehicle.

Disconnect the battery before working on the engine.

**NOTICE**

**Always disconnect BLACK (-) cable first and reconnect last.**

During the assembly or the installation, use the torque values and service products as in the exploded views.

Clean threads before applying a threadlocker. Refer to *Self-Locking Fasteners* and *Loctite Application* at the beginning of this manual for complete procedure.

**⚠ WARNING**

**Torque wrench tightening specifications must be strictly adhered to.**
**Locking devices when removed (e.g.: locking tabs, cotter pin, etc.) must be replaced.**

**NOTICE**

**Hoses, cables or locking ties removed during a procedure must be reinstalled as per factory standards.**

When disassembling parts that are duplicated in the engine, (e.g. valves, springs), it is strongly recommended to note their position and to keep the parts of the same assembly as a “group”. If you find a defective component, it will be much easier to find the cause of the failure. Since parts were break-in together during the engine operation, they will keep their matched fit when parts are re-assemble together within their “group”.

## Inspection

### *Cylinder Leak Test*

#### *General*

Before performing the cylinder leak test, verify the following:

– Clamp tightness
– Hoses condition.

**NOTE:** For best accuracy, the leak test should be done with the engine at normal operating temperature.

**⚠ CAUTION**

**Engine parts could be hot.**

**NOTE:** The following steps are the same for each cylinder.

#### *Preparation*

1. Remove the *Valve Cover*, see procedure in this subsection.
2. Remove spark plug.
3. Using the drive pulley, turn the engine counterclockwise to bring piston to TDC of compression stoke. Use a dial gauge or a suitable tool to position the piston to TDC.

**NOTE:** The piston must be set precisely to TDC of compression stroke. If not, the engine will continue to rotate when pressure builds up.

#### *Leak Test*

1. Install a gauge adaptor into spark plug hole.

| | |
|---|---|
| **Engine leak down test kit (P/N 529035661)** |  |

2. Connect the leak down tester to an adequate air supply.
3. Set gauge needle to zero.

**NOTE:** All testers have specific instructions on gauge operation and required pressure. Refer to manufacturer's instructions.

4. Supply combustion chamber with air pressure.
5. Note the amount or percentage of leakage (depending on tester).

| Leakage Percentage | Engine Condition |
|---|---|
| 0% to 15% | Excellent |
| 16% to 25% | Good |
| 26% to 40% | Fair: reduced engine performance |
| 41% and higher | Poor: diagnose and repair engine |

### *Diagnosis*

Listen for air leaks.

- Air escaping on intake port or throttle body means leaking intake valve(s).
- Air escaping on exhaust port means leaking exhaust valve(s).
- Air bubbles out of coolant tank means leaking cylinder head gasket.
- Air or coolant escaping from cylinder head means damaged gasket or loosened screws.
- Air escaping into crankcase area means excessively worn cylinder or broken piston rings.
- Air or oil escaping from crankcase means damaged gasket or loosened screws.

### *Repair Tips*

Blue exhaust gas means damaged or worn piston rings or valve stem seals.

White exhaust gas means damaged cylinder head gasket.

Coolant tank cap opening without overheat means damaged cylinder head gasket.

Leaking valves can be caused by carbon deposits or burnt valve face.

### *Assembly*

Reverse the preparation procedure.

## Troubleshooting

Always check for fault codes. If a fault code is detected, service the fault code first. Refer to *Diagnostic and Fault Codes* subsection.

**NOTE:** When diagnosing an engine problem, always perform the cylinder leak test. This will help pinpoint a problem. Refer to *Cylinder Leak Test* in this subsection.

### *Troubleshooting*

**1. Unusual Engine Noise or Vibrations**

Discharged or defective valve lifters.

– *Check engine oil pressure, refer to Lubrication System - GEN1 subsection.*

– *Replace valve lifters.*

Camshaft(s) or camshaft holder(s) worn out.

– *Check and replace damaged parts.*

Faulty chain tensioner.

– *Replace chain tensioner. Refer to Timing Chain subsection.*

Chain guide(s) worn out.

– *Replace chain guide(s). Refer to Timing Chain subsection.*

Stretched timing chain or worn out sprockets.

– *Replace timing chain and sprockets. Refer to Timing Chain subsection.*

Loose timing chain gear screws.

– *Retighten screws with recommended torque.*

Incorrect camshaft timing.

– *Replace damaged components and readjust camshaft timing.*

**2. Oil Leakage from Cylinder Head**

Leaking valve cover gasket.

– *Replace valve cover gaskets and retighten valve cover with recommended torque.*

– *Check valve cover for cracks or other damage.*

Leaking spark plug tube O-rings.

– *Replace spark plug tube O-rings.*

– *Clean spark plug area from oil spillage.*

Blow-by connector is leaking.

– *Replace blow by connector O-ring.*

Leaking cylinder head gasket.

– *Check cylinder head for damage.*

– *Replace cylinder head gasket and retighten screws with recommended torquing procedure.*

**3. Engine Suddenly Turns Off or Lacks Acceleration or Power**

Incorrect camshaft timing.

– *Replace damaged components and readjust camshaft timing.*

Leaking intake or exhaust valves.

– *Perform a Cylinder Leak Test. Repair or replace damaged components.*

Broken valve spring(s).

– *Replace defective parts.*

## Procedures

### *Camshaft Position Sensor (CAPS)*

#### *CAPS Location*

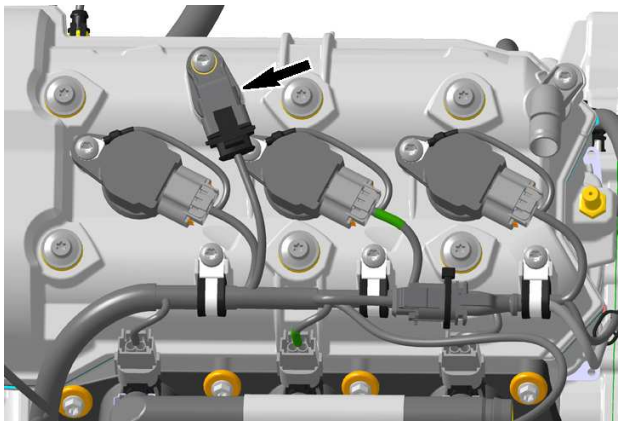

#### *Testing the CAPS Input Voltage (Harness Side)*

1. Remove the parts required to access the CAPS.
2. Disconnect CAPS connector.

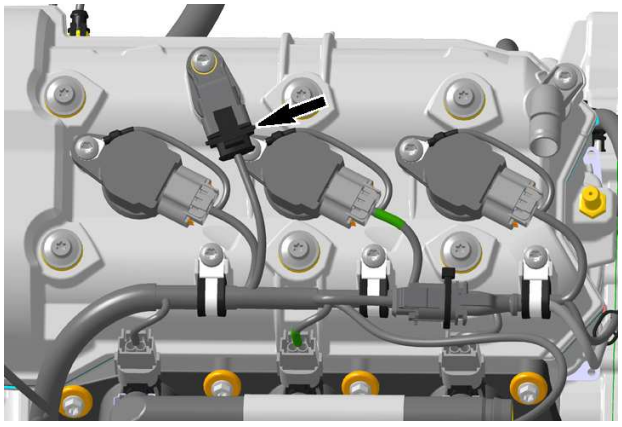

3. Install key on D.E.S.S. post.
4. Press the START/STOP button to wake up the ECM without holding the brakes.
5. Probe harness connector terminals as per following table.

| | |
|---|---|
| **Fluke 115 multimeter (P/N 529035868)** |  |

| CAPS Input Voltage Test | | |
|---|---|---|
| **CAPS Connector Pin** | | **Specification** |
| 1 | 3 | Battery voltage |

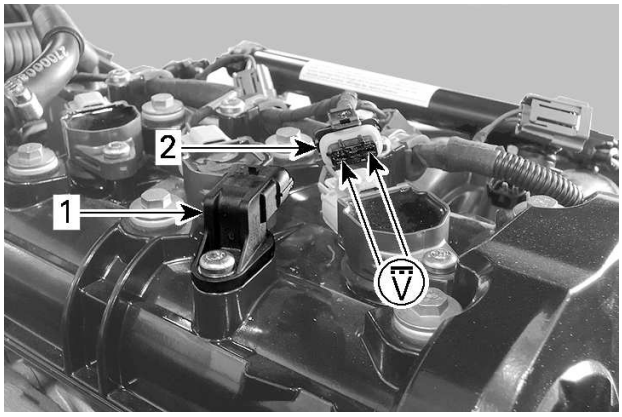


***TYPICAL***
1. *CAPS*
2. *CAPS connector*

6. If battery voltage is read, proceed with *Testing the CAPS (Dynamic)* further in this subsection.
7. If battery voltage is not read, probe circuit as per following table.

| CAPS Input Voltage Test | | |
|---|---|---|
| **CAPS Connector Pin** | **Battery Post** | **Specification** |
| 3 | Negative (-) | Battery voltage |

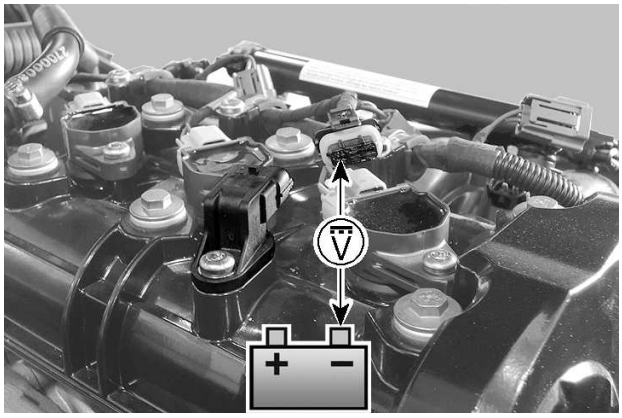


***TYPICAL***

8. If voltage is read to battery ground, check continuity of ground circuit between CAPS pin 1 and ECM-A connector pin D4. Repair or replace wiring and connectors.
9. If voltage is not read to battery ground, carry out *Testing the Continuity of CAPS Power Circuit*.

### *Testing the CAPS Power Circuit Continuity*

1. Remove the F5 fuse.
2. Set the multimeter to Ω.

| **Fluke 115 multimeter (P/N 529035868)** |  |
|---|---|

3. Read resistance of the CAPS circuit as per following table.

| **CAPS Power Circuit Continuity Test** | | |
|---|---|---|
| **CAPS Connector Pin** | **Fuse Box** | **Specification** |
| 3 | D1 | Close to 0 Ω |

4. If continuity is good, wiring and connectors are functional.
5. If a high resistance or an open circuit is measured, refer to *Wiring Diagram* and check the following:
   - Continuity from CAPS connector pin 3 to HIC connector pin 4.
   - Continuity from HIC connector pin 4 to fuse box contact D1.
6. Pay attention to connector pin contact and junction JT (VT/BU).
7. Repair or replace wiring and connectors as required.
8. Reinstall all removed parts.

### *Testing the CAPS (Dynamic)*

1. Remove the parts required to access the CAPS.
2. Remove CAPS sensor from engine.
3. Back-probe connector and read voltage as follows.

| **NOTICE** |
|---|
| **Do not use sharp end probes. They could damage the connector seal.** |

4. Briefly press the START/STOP button to wake up the ECM.
5. Install the tether cord cap on the D.E.S.S. post.
6. Read voltage as per following tables.

| **Fluke 115 multimeter (P/N 529035868)** |  |
|---|---|

| **CAPS Dynamic Voltage Test** | | | |
|---|---|---|---|
| **CAPS Condition** | **CAPS Pin** | | **Specification** |
| Free | 1 | 2 | Battery voltage |

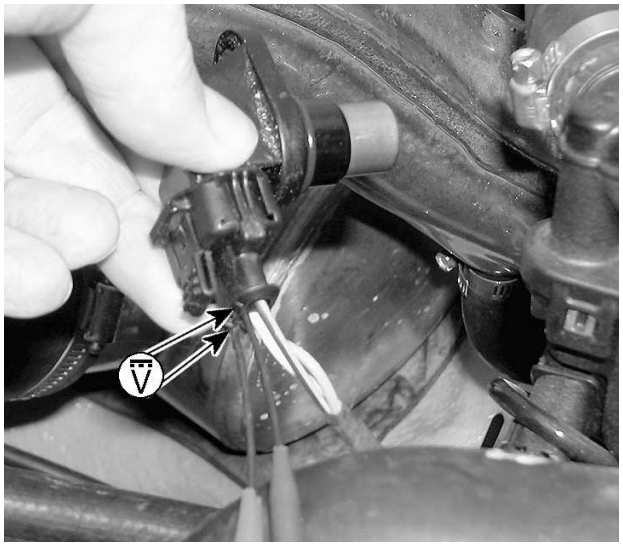

*TYPICAL*

| **CAPS Dynamic Voltage Test** | | | |
|---|---|---|---|
| **CAPS Condition** | **CAPS Pin** | | **Specification** |
| Metallic object on sensor | 1 | 2 | Close to 0 Vdc |

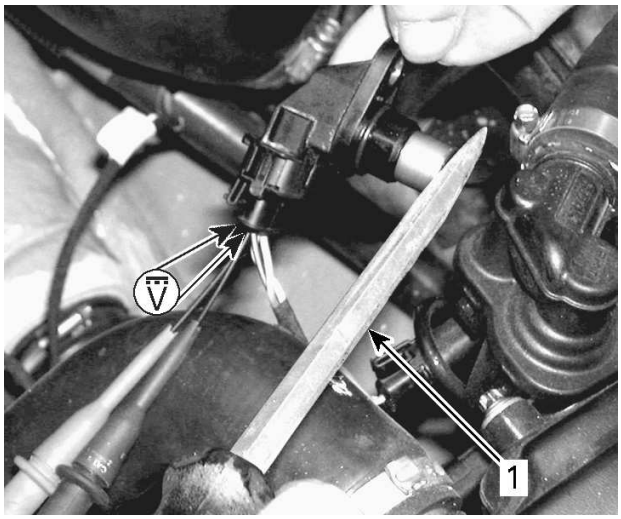


*TYPICAL*
1. *Metallic object*

7. If voltage is as specified, repair or replace wiring and connectors between sensor and ECM.
8. If wiring is good, check ECM. Refer to *Engine Control Module (ECM) - GEN1*.
9. If battery voltage is not measured as specified, try a new CAPS.

### *Replacing the CAPS*

1. Disconnect CAPS connector.

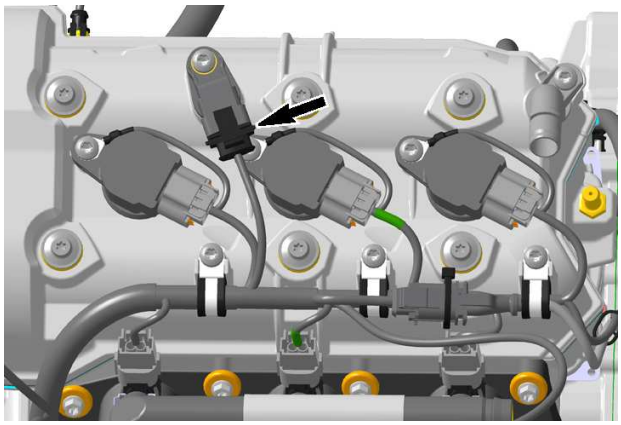

2. Unscrew the CAPS retaining screw.
3. Pull CAPS from engine.
4. Apply engine oil on the new sensor O-ring.

**NOTICE**

**Be sure to install new O-ring on the new CAPS.**

5. Install the new CAPS.

| Tightening Torque | |
|---|---|
| CAPS retaining screw | 9 ± 1 Nm<br>(80 ± 9 lbf-in) |

6. Apply dielectric grease in the CAPS connectors.

**Dielectric grease**

### *Valve Cover*

#### *Removing the Valve Cover*

1. Remove the upper body module. Refer to *Body* subsection.
2. Remove pulley guard.
3. Remove the exhaust manifold.
4. Disconnect vent tube from the blow-by connector.

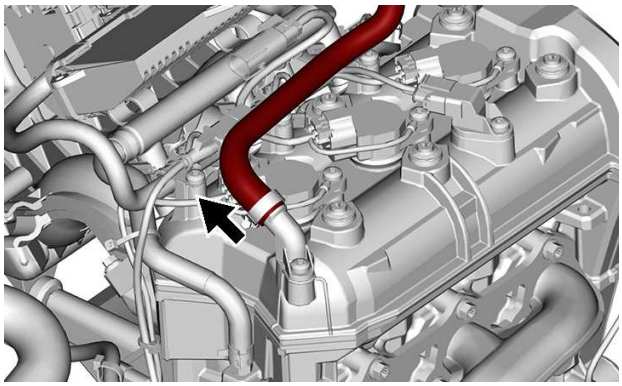

5. Disconnect CAPS.
6. Remove ignition coils. Refer to *Ignition Coils and Spark Plugs - GEN1 subsection*..
7. Remove screws securing the electrical harness to the valve cover.

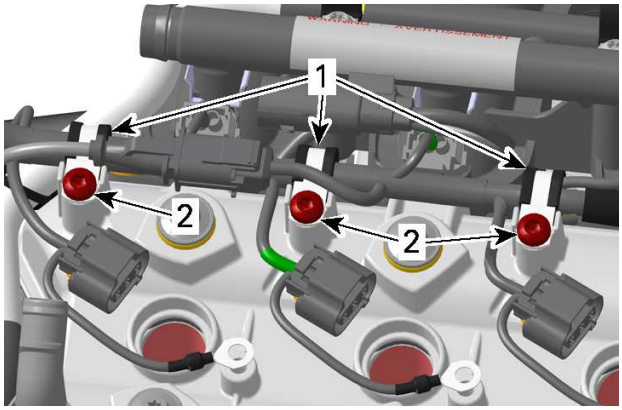


1. *Cable clamps*
2. *Retaining screws*

8. Remove valve cover retaining screws.

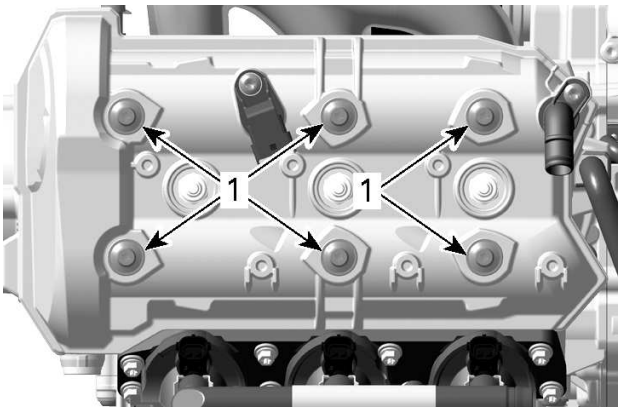


*1. Valve cover screws*

9. Lift and tilt valve cover with gasket towards front of engine.

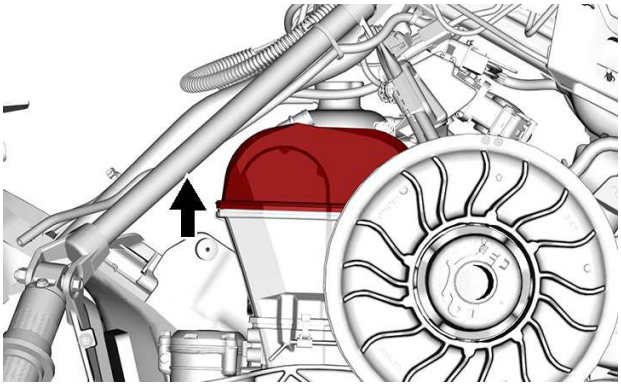

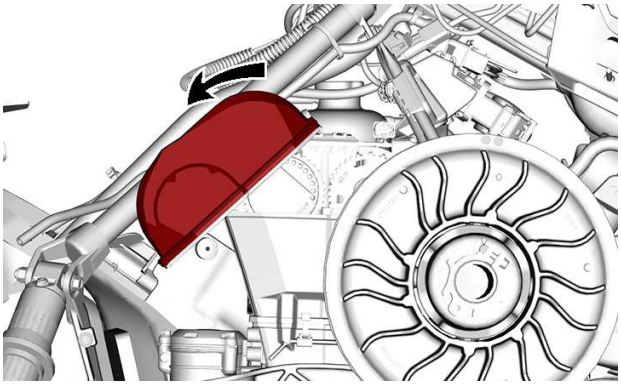

10. Pull valve cover and gasket out through LH side of vehicle.

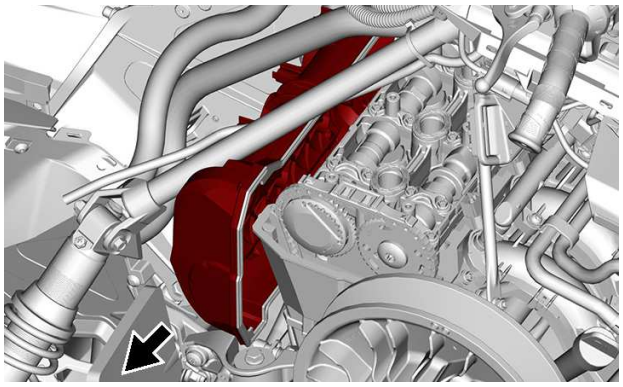

11. Remove the small valve cover gaskets (spark plug holes).

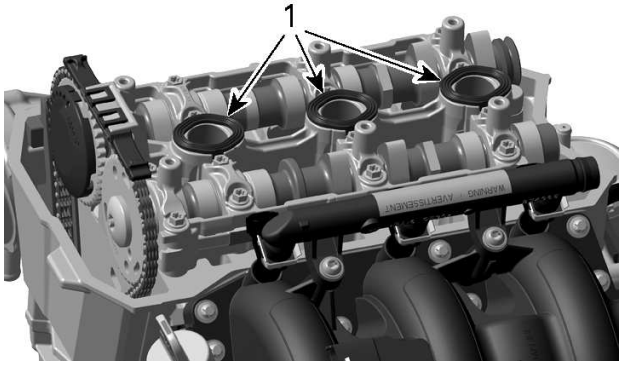


*1. Small gaskets*

### *Inspecting the Valve Cover*

Check the valve cover for cracks or other damage.

Replace defective parts.

### *Installing the Valve Cover*

For installation reverse the removal procedure. However, pay attention to the following details.

1. Properly fit the **NEW** small gaskets into the camshaft holder grooves.
2. Properly lay the **NEW** large gasket onto the cylinder head flat surface.
3. Apply engine oil to the sealing surface of the V-ring.




*INSIDE VALVE COVER*
*1. Apply engine oil here*

4. Install valve cover.

**NOTICE**

**Adhere to the following procedure, otherwise damage to the V-ring will occur causing crankcase venting malfunction.**

1. Move the valve cover towards the MAG side.

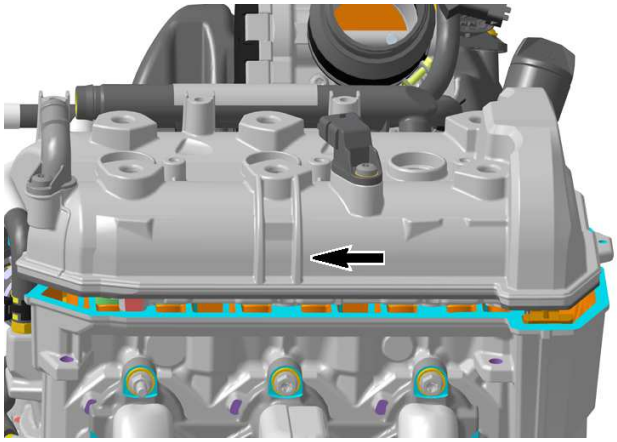

*TYPICAL*

2. Put valve cover onto cylinder head.

**NOTICE**

**Make sure the valve cover gasket is well positioned in the cover groove.**

3. Push valve cover towards the PTO side to ensure that the V-ring properly seals on sealing surface inside the cover.

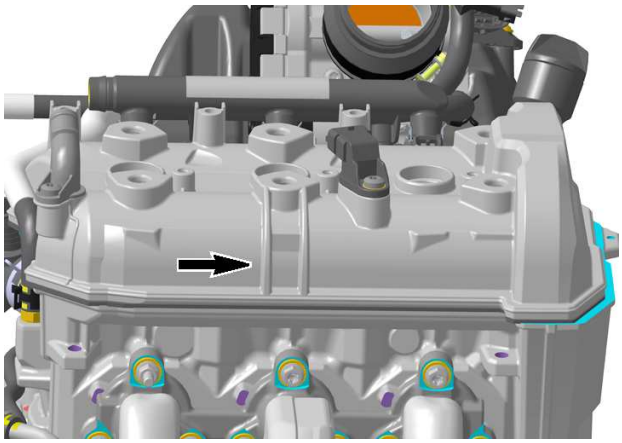

*TYPICAL*

5. Install valve cover screws and tighten as per following sequence:

| Tightening Torque | | |
|---|---|---|
| Valve cover screws | Step A | 9 ± 1 Nm (80 ± 9 lbf-in) |
| | Step B | 9 ± 1 Nm (80 ± 9 lbf-in) |

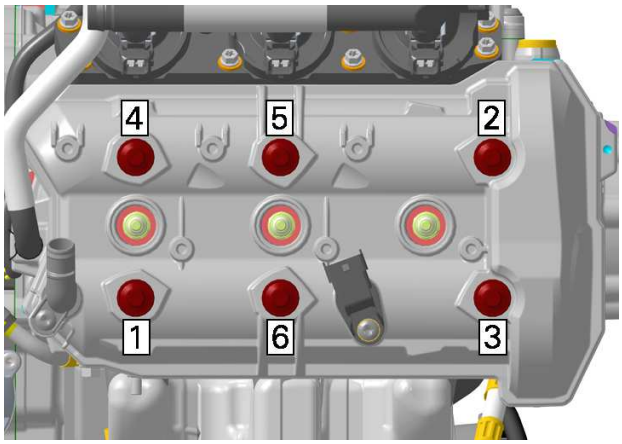


*TIGHTENING SEQUENCE*

## *Camshafts*

### *Removing the Camshaft*

1. Remove *Valve Cover*, see procedure in this subsection.
2. Lock crankshaft, refer to *Crankshaft Locking Procedure* in the *Cylinder Block* subsection.

   Remove timing chain tensioner. Refer to *Timing Chain* subsection.
3. Remove:
   1. Breather cover

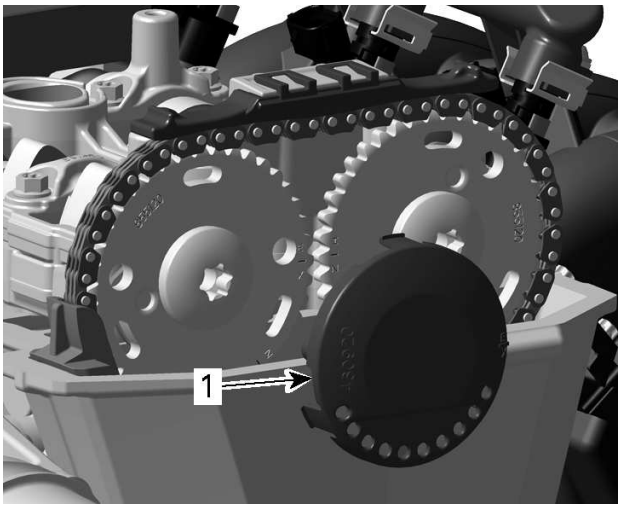


*i. Breather cover*

2. Upper timing chain guide
3. Timing chain guide.

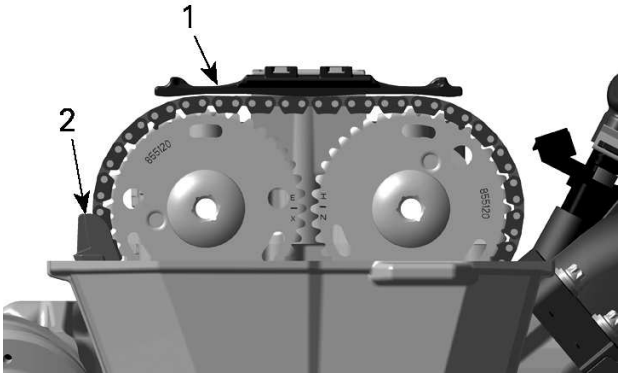


*i. Upper timing chain guide*
*ii. Timing chain guide*

4. Remove timing chain from camshaft timing gears.
5. Remove camshaft holder retaining screws (x16).

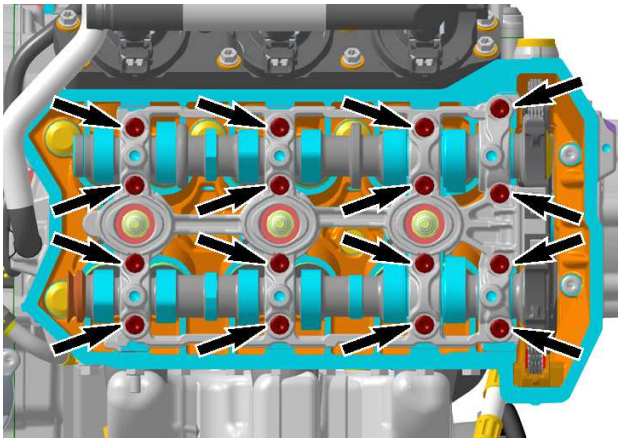

***TYPICAL***

6. Remove the camshaft holder upper half.

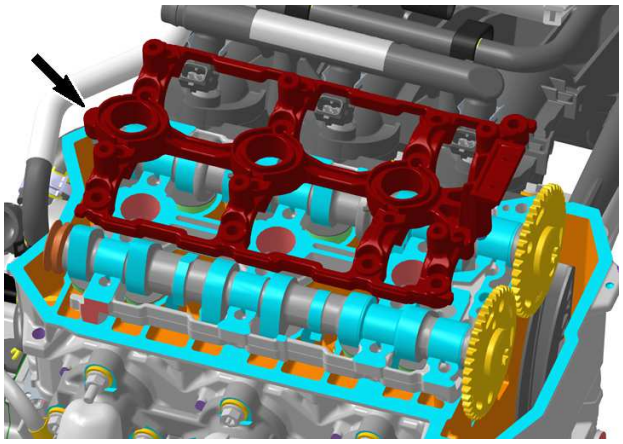

***TYPICAL***

7. Put timing chain aside.
8. Remove camshafts with timing gears.

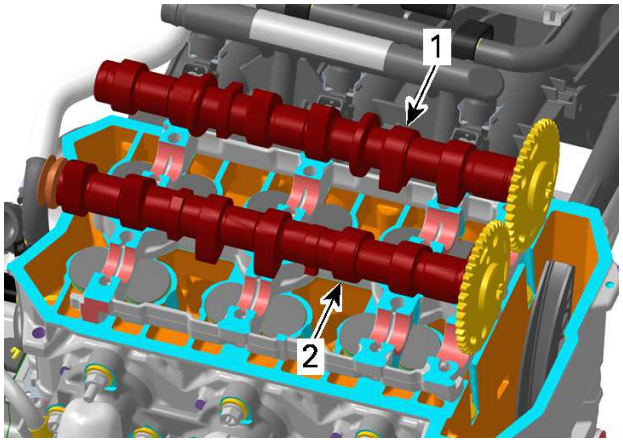


***TYPICAL***
*1. Intake camshaft*
*2. Exhaust camshaft*

**NOTE:** Remove camshaft timing gears only if necessary. Refer to *Timing Chain* subsection.

### *Inspecting the Camshaft*

1. Check each lobe and bearing journal for scoring, scuffing, cracks, or other signs of wear.
2. Check V-ring if it is brittle, hard or otherwise damaged.
3. Measure camshaft bearing journal diameter and lobe height, using a micrometer.

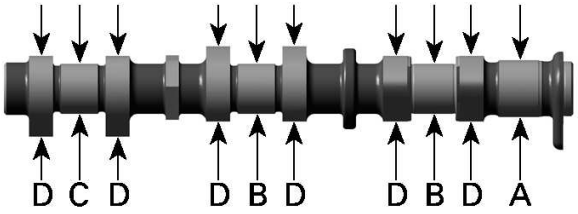


*A. Camshaft journal (PTO)*
*B. Camshaft journal (center)*
*C. Camshaft journal (MAG)*
*D. Camshaft lobes*

| Camshaft Journal Diameter | | |
|---|---|---|
| PTO Journal (A) | New | 25.967 to 25.980 mm (1.0223 to 1.0228 in) |
| | Service limit | 25.940 mm (1.0213 in) |
| Center Journals (B) | New | 22.957 to 22.970 mm (.9038 to .9043 in) |
| | Service limit | 22.930 mm (.9028 in) |
| Mag Journal (C) | New | 22.967 to 22.980 mm (.9042 to .9047 in) |
| | Service limit | 22.940 mm (.9031 in) |

| Camshaft Lobe Height | | |
|---|---|---|
| Intake Camshaft (D) | New | 38.35 to 38.55 mm (1.51 to 1.518 in) |
| | Service limit | 38.33 mm (1.509 in) |
| Exhaust Camshaft (D) | New | 38.35 to 38.55 mm (1.51 to 1.518 in) |
| | Service limit | 38.33 mm (1.509 in) |

4. Replace parts if necessary.
5. For camshaft journal radial clearance and camshaft holder bearing diameter refer to *Camshaft Holder* in this subsection.
6. Check timing chain guide for wear, cracks or deformation. Replace as required.
7. Replace timing chain guide if any groove caused by timing chain exceeds service limit.

| Chain Guide Groove Depth | |
|---|---|
| Service Limit | 1 mm (.039 in) |




*1. Timing chain guide*

### *Installing the Camshaft*

The installation is the reverse of the removal procedure. However, pay attention to the following.

1. Ensure crankshaft is still locked.
2. Apply engine oil on camshaft bearings.

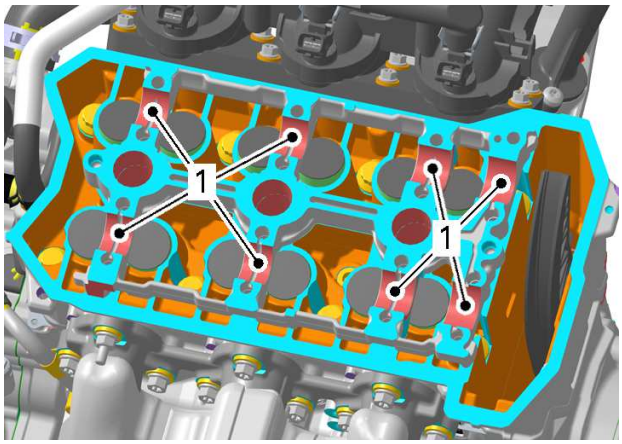


*1. Areas where to apply engine oil*

**NOTE:** The camshafts are not identical. Any mix-up of the components would lead to engine damage. The exhaust camshaft has a machined area on MAG side for the V-ring.

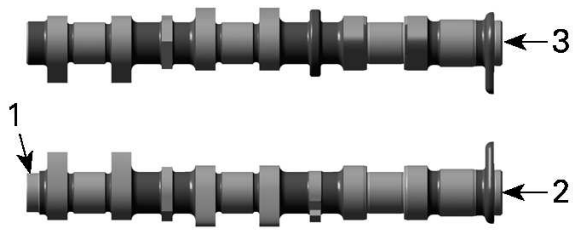


*1. Machined area*
*2. Exhaust camshaft*
*3. Intake camshaft*

3. If removed, reinstall camshaft timing gears on camshafts. Refer to *Camshaft Timing Gears* in the *Timing Chain* subsection.
4. Apply engine oil on camshaft journal diameter.
5. Install exhaust camshaft assembly with mark "EX" parallel to cylinder head gasket.

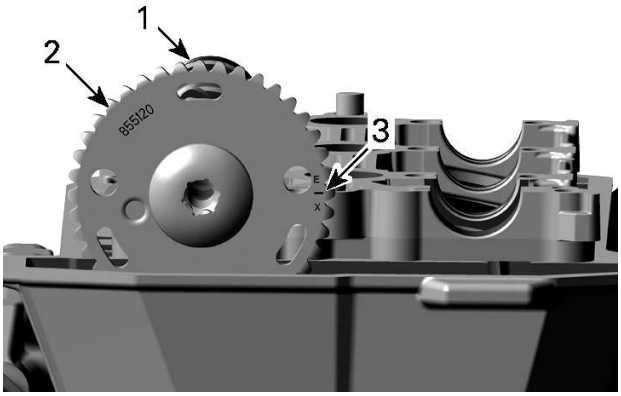


1. *Exhaust camshaft*
2. *Camshaft timing gear*
3. *Mark "EX"*

6. Install intake camshaft assembly with mark "IN" parallel to cylinder head gasket.

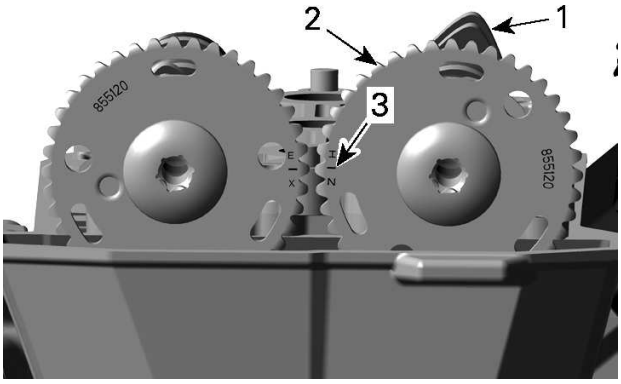


1. *Intake camshaft*
2. *Camshaft timing gear*
3. *Mark "IN"*

7. Install upper half of camshaft holder , then tighten screws as per following sequence:

| Tightening Torque | | |
|---|---|---|
| Camshaft holder | Step A | 5 ± 0.5 Nm (44 ± 4 lbf-in) |

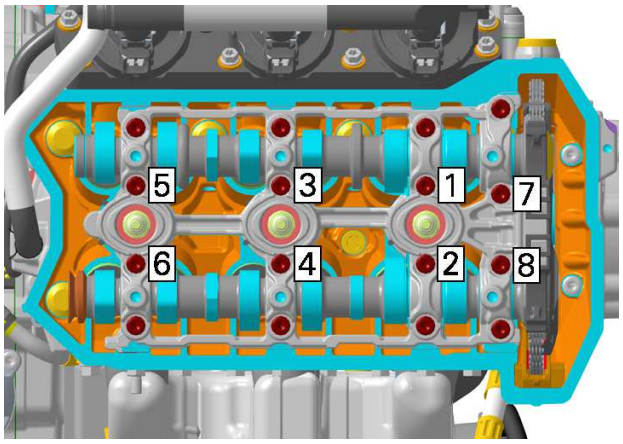


***TYPICAL - CAMSHAFT HOLDER TIGHTENING SEQUENCE - STEP A***

| Tightening Torque | | |
|---|---|---|
| Camshaft holder | Step B | 9 ± 1 Nm (80 ± 9 lbf-in) |

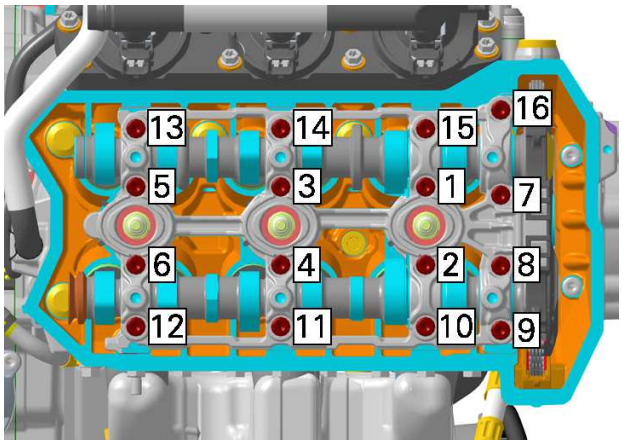


***TYPICAL - CAMSHAFT HOLDER TIGHTENING SEQUENCE - STEP B***

**NOTE:** After reassembly of the camshafts is completed, check if camshafts can be turned easily.

8. Lock camshafts.

| | |
|---|---|
| **Camshaft locking tool (900 ACE) (P/N 529036206)** |  |

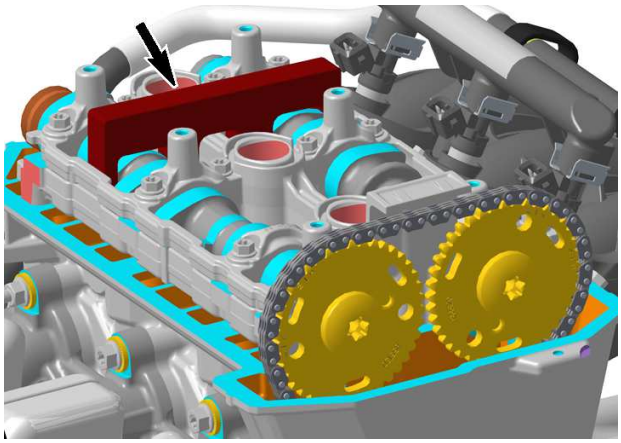

*TYPICAL*

9. Lift timing chain out of timing chain compartment.
10. Pull timing chain up on exhaust side and install it on the exhaust camshaft timing gear.

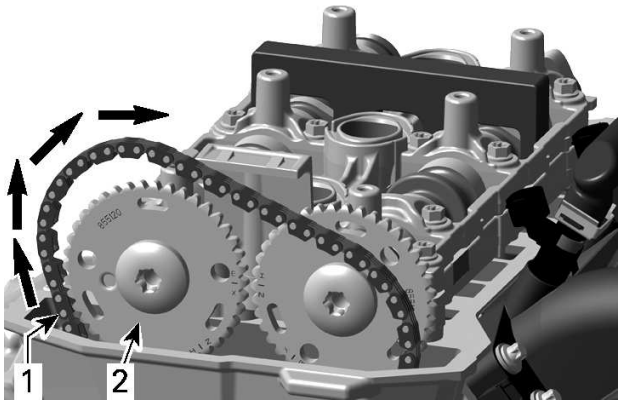


1. *Timing chain*
2. *Exhaust camshaft timing gear*

11. Pull timing chain towards intake side and install it on the intake camshaft timing gear.

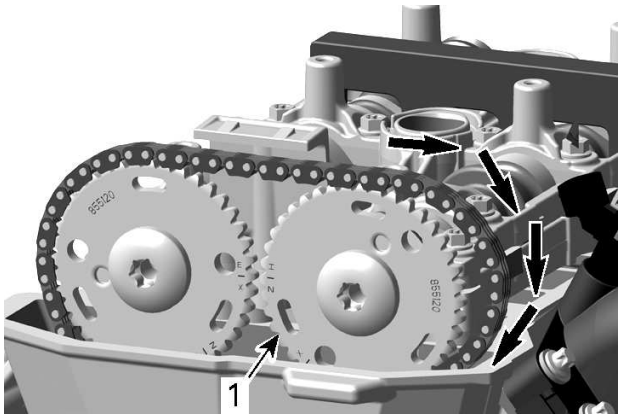


1. *Intake camshaft timing gear*

12. Install timing chain guide.

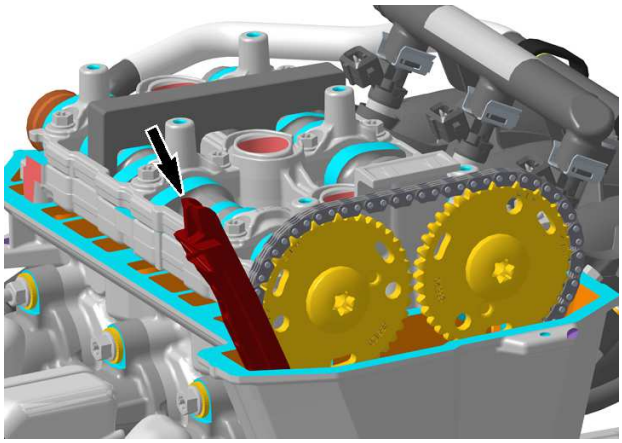

*TYPICAL*

13. Install upper timing chain guide on camshaft holder.

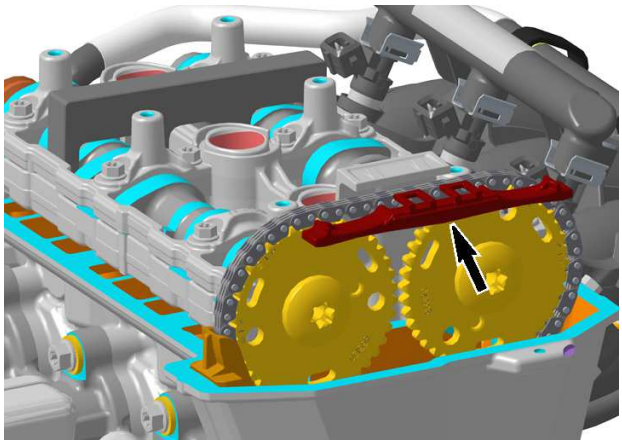

*TYPICAL*

14. Install *Timing Chain Tensioner*, refer to *Timing Chain* subsection.
15. Ensure marks on camshaft timing gears are still aligned. If not, repeat procedure.

**NOTICE**

**After installation of timing chain tensioner, the marks "IN" on intake and "EX" on exhaust camshafts must be aligned.**

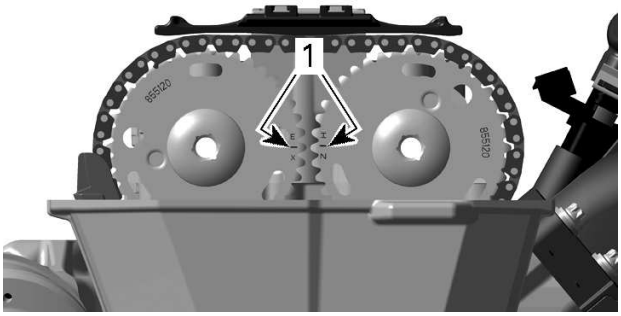


***CAMSHAFT TIMING GEARS***
*1. Marks must be aligned*

16. Install breather cover.

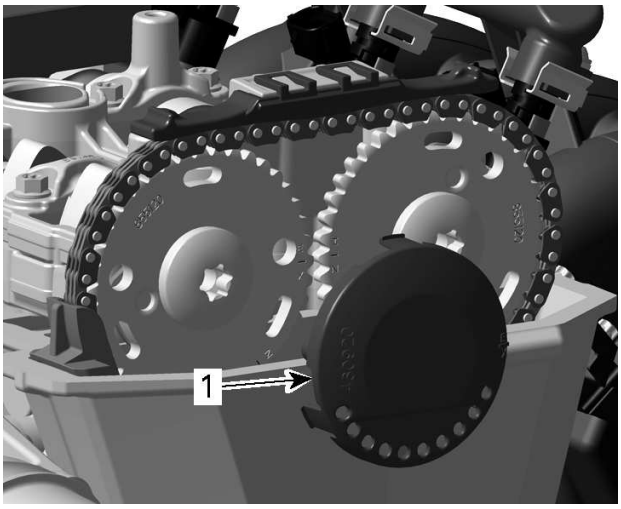


*1. Breather cover*

17. Remove camshaft locking tool.

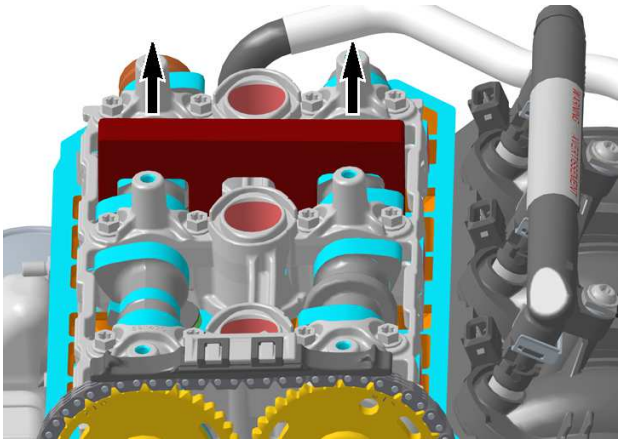

***TYPICAL***

18. Remove crankshaft locking tool.

### *Camshaft Holder*

#### *Removing the Camshaft Holder*

1. Remove camshafts, see procedure in this subsection.
2. Remove the camshaft holder lower half with gaskets from cylinder head.
3. Remove and discard gaskets from camshaft holder halves.

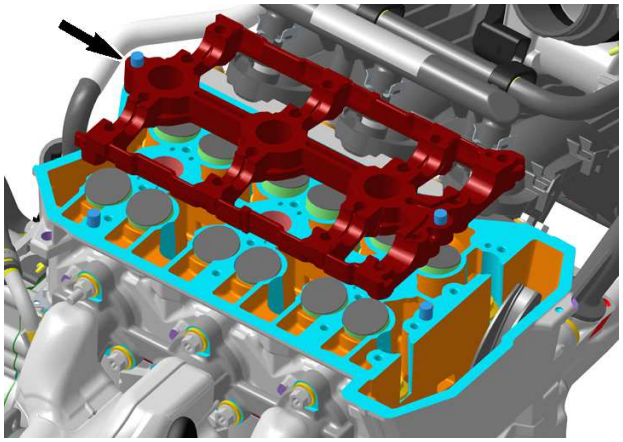

#### *Inspecting the Camshaft Holder*

1. Check camshaft holder for scoring, scuffing, cracks, or other signs of wear.
2. Make sure oil orifices are not clogged. Blow them out with pressurized air.

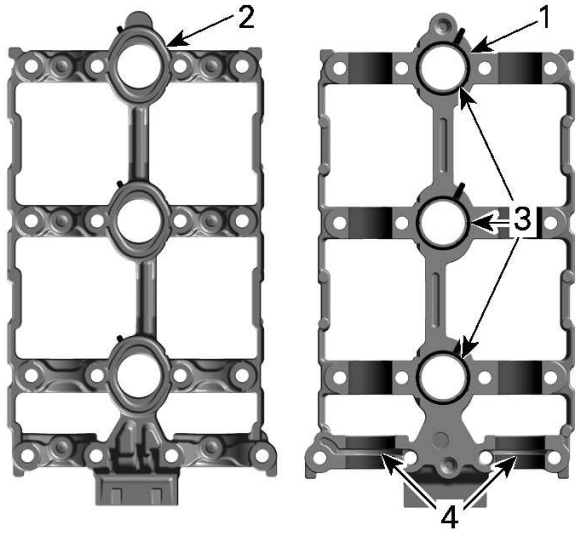


*1. Camshaft holder upper half - view from beneath*
*2. Camshaft holder upper half - view from above*
*3. Gaskets*
*4. Oil orifices*

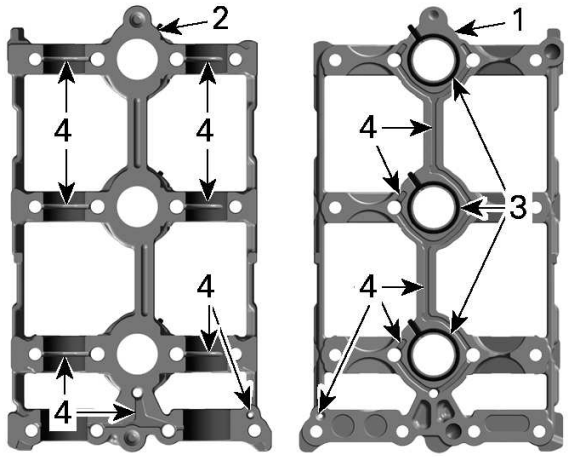


*1. Camshaft holder lower half - view from beneath*
*2. Camshaft holder lower half - view from above*
*3. Gaskets*
*4. Oil orifices*

3. Install camshaft holder on cylinder head.
4. Tighten camshaft holder screws to specification, refer to *Installing the Camshaft* in this subsection.
5. Measure camshaft holder bearing diameter.

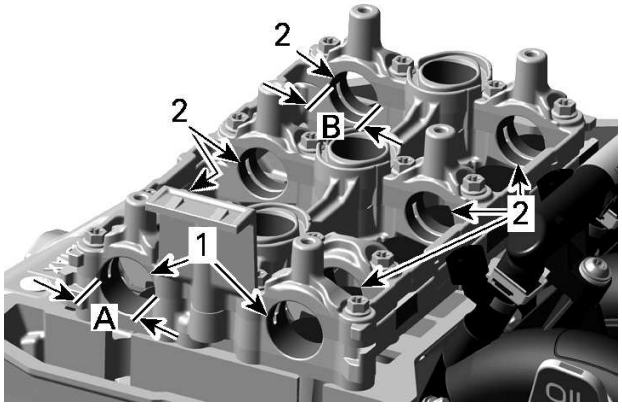


***CAMSHAFT HOLDER BEARINGS***
*1. PTO bearings*
*2. Center and MAG bearings*
*A. Diameter PTO bearing*
*B. Diameter center and MAG bearing*

| Camshaft Holder Bearing Diameter | | |
|---|---|---|
| PTO Bearing | New | 26.000 to 26.021 mm (1.024 to 1.024 in) |
| | Service limit | 26.050 mm (1.026 in) |
| Center and MAG Bearings | New | 23.000 to 23.021 mm (.906 to .906 in) |
| | Service limit | 23.050 mm (.907 in) |

6. Measure clearance between camshaft journals and camshaft holder, using the plastic feeler gauge.

**NOTE:** The plastic feeler gauge is available at automotive parts retailer.

7. Install camshaft holder lower half on cylinder head.
8. Place camshafts in the camshaft holder lower half and apply a plastic-gauge on the camshaft bearing journal.

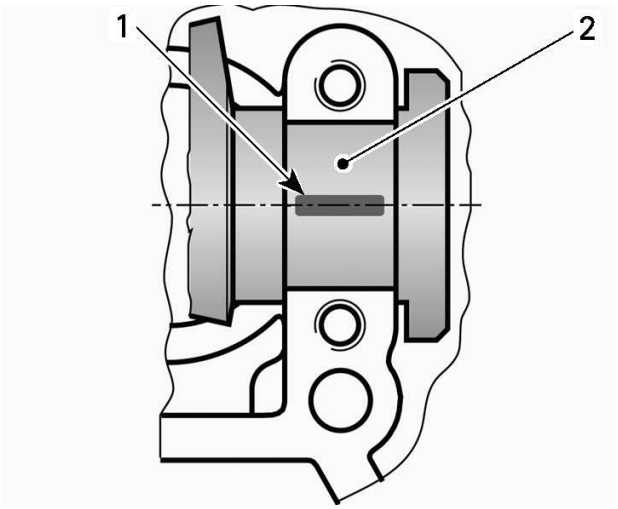


***TTYPICAL***
*1. Plastic gauge*
*2. Camshaft bearing journal*

9. Install camshaft holder upper half in its proper position and tighten screws to specification, refer to *Installing the Camshaft* in this subsection.
10. Unfasten camshaft holder.
11. Measure the maximum width of the pressed plastic gauge with the corresponding graduated scale.

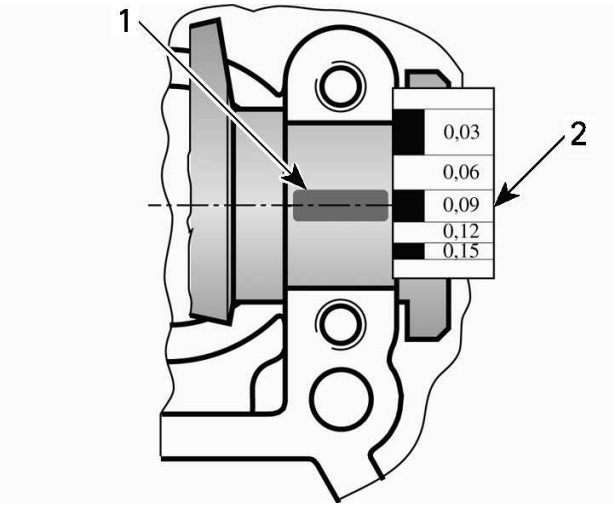


*TYPICAL*
1. *Pressed plastic gauge*
2. *Graduated scale*

| Camshaft Journal Radial Clearance | | |
|---|---|---|
| PTO And MAG Bearing | New | 0.020 to 0.054 mm (.001 to .002 in) |
| | Service limit | 0.080 mm (.003 in) |
| Center Bearing | New | 0.03 to 0.064 mm (.001 to .003 in) |
| | Service limit | 0.090 mm (.004 in) |

Replace parts if necessary.

### *Installing the Camshaft Holder*

Install camshaft holder lower half.

Continue procedure as explained in *Installing the Camshaft* in this subsection.

### *Hydraulic Valve Lifters*

### *Removing the Hydraulic Valve Lifter*

**NOTE:** Hydraulic valve lifter are maintenance free.

1. See procedures in this subsection to remove:
   - Valve cover
   - Camshafts
   - Camshaft holder.
2. Pull hydraulic valve lifter off the cylinder head.

**NOTE:** When disassembling the hydraulic valve lifter, it is strongly recommended to note their original position.

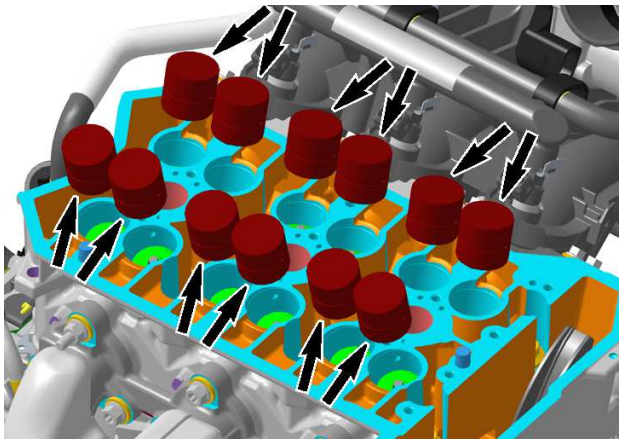

*TYPICAL*

### *Inspecting the Hydraulic Valve Lifter*

1. Check surface of hydraulic valve lifter for scoring or other damage.
2. Measure valve lifter diameter. Replace if out of specification.

| Hydraulic Valve Lifter | |
|---|---|
| New | 28.354 to 28.370 mm (1.1163 to 1.1169 in) |
| Service limit | 28.340 mm (1.1157 in) |

| Hydraulic Valve Lifter Radial Clearance | |
|---|---|
| Service limit | 0.100 mm (.0039 in) |

### *Installing the Hydraulic Valve Lifter*

The installation is the reverse of the removal procedure. However, pay attention to the following.

1. Apply engine oil on the outside diameter of the hydraulic valve lifter.

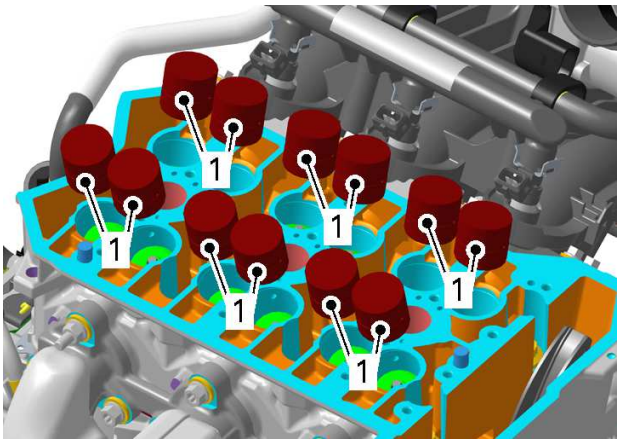


*TYPICAL*
1. *Apply engine oil on outer diameter*

## Cylinder Head

### Removing the Cylinder Head

1. Remove the engine from the vehicle. Refer to *Engine Removal and Installation* subsection.
2. See procedures in this subsection to remove:
   - Valve cover
   - Camshafts
   - Camshaft holder
   - Hydraulic valve lifters.
3. Remove M6 cylinder head screws.

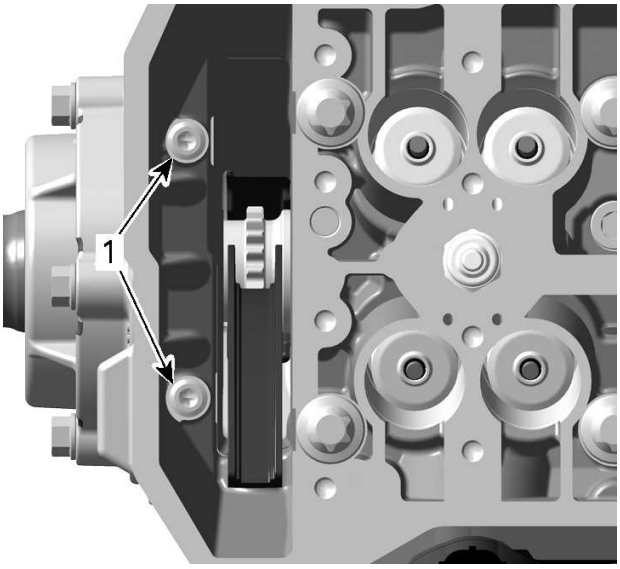


1. *Remove M6 cylinder head screws*

4. Remove and discard M9 cylinder head screws.

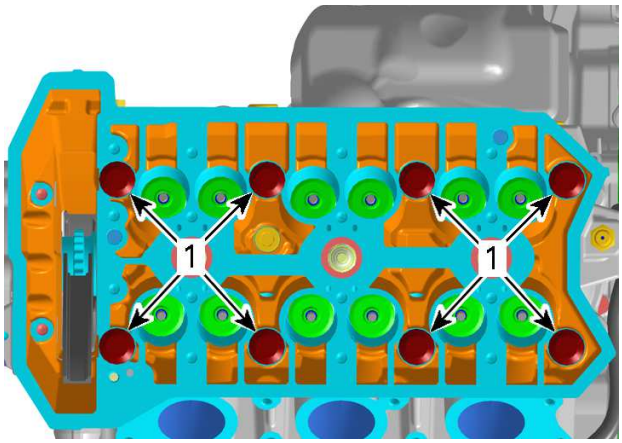


*TYPICAL*
1. *Remove M9 cylinder head screws*

5. Pull cylinder head off the cylinder block.
6. Remove and discard cylinder head gasket.

### Cleaning the Cylinder Head

1. Remove carbon deposits from combustion chambers, exhaust ports and piston tops.
2. Clean cylinder head, especially cylinder head screw surface from oil spillage.
3. Blow out the oil orifices with pressurized air and make sure they are not clogged.

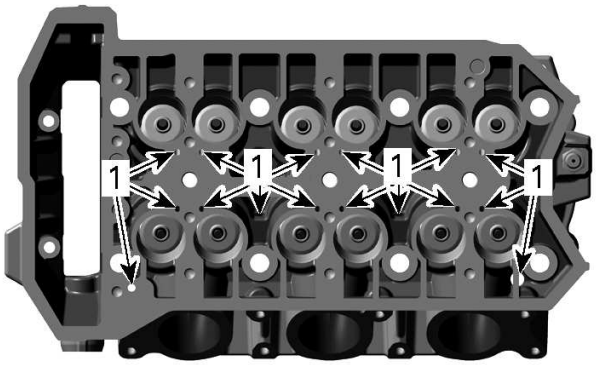


1. *Oil orifices*

### Inspecting the Cylinder Head

1. Check for cracks between valve seats or other damage, if so, replace cylinder head.
2. Check cylinder head mating surface for flatness using a straight edge.
3. Check hydraulic valve lifter bores for scoring or other damage, if so, replace cylinder head.

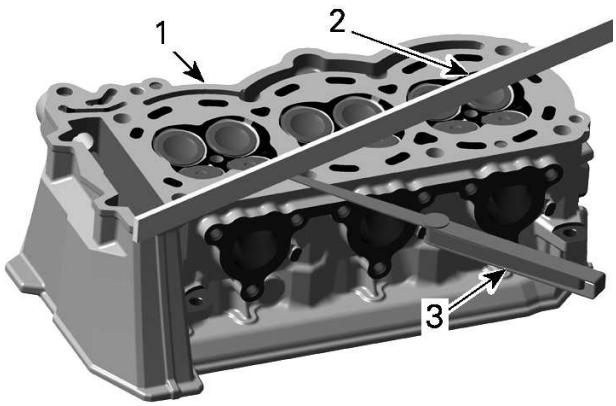


1. *Cylinder head*
2. *Straight edge*
3. *Feeler gauge*

4. Check for cylinder head warping.

| Cylinder Head Warpage | |
|---|---|
| Service limit | 0.15 mm (.0059 in) |

5. If warping exceeds specification, resurface the cylinder head as follows:

**NOTE:** To ensure an even surface, rotate cylinder head several times during resurfacing.

- Use a 400 - 600 grit wet sandpaper on a surface plate and gently grind off the mating surface.

6. Replace cylinder head, if resurfacing fails.

### *Installing the Cylinder Head*

The installation is the reverse the removal procedure. However, pay attention to the following.

1. Install a **NEW** cylinder head gasket.

**NOTICE**

**Each installation of the cylinder head requires a NEW cylinder head gasket. Using a gasket twice would cause engine damage.**

2. Install cylinder head on the cylinder block.
3. Install **NEW** M9 cylinder head screws.

**NOTICE**

**This assembly uses stretch screws. Always use NEW screws and strictly adhere to the tightening procedure.**

4. Tighten cylinder head screws as follows:

**NOTE:** Always perform step A on all M9 cylinder head screws before going to the step B.

| Tightening Procedure | | |
|---|---|---|
| Cylinder head M9 screws | Step A | 20 ± 2 Nm (15 ± 1 lbf-ft) |
| | Step B | Additional 150° ± 5° |

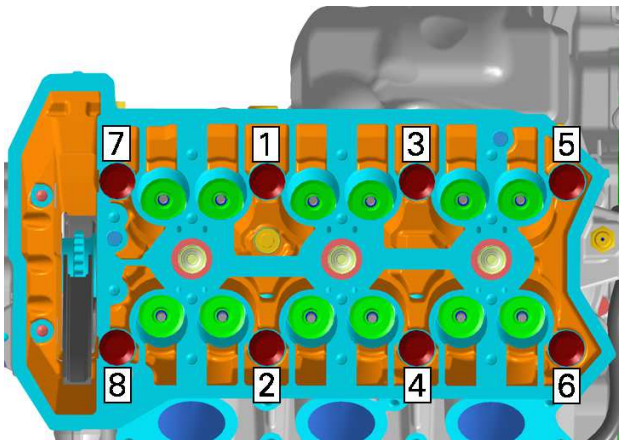


*TYPICAL - M9 SCREWS TIGHTENING SEQUENCE*

**NOTE:** Use a torque angle gauge to carry out **Step B**.

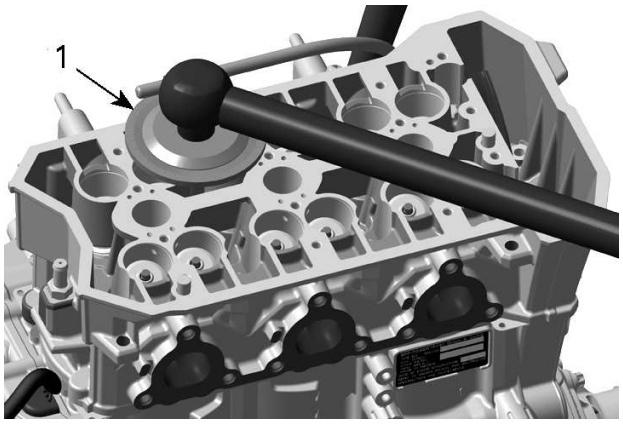


1. *Torque angle gauge*

5. Install M6 screws. Tighten as follows.

| Tightening Torque | |
|---|---|
| Cylinder head M6 screws | 9 ± 1 Nm (80 ± 9 lbf-in) |

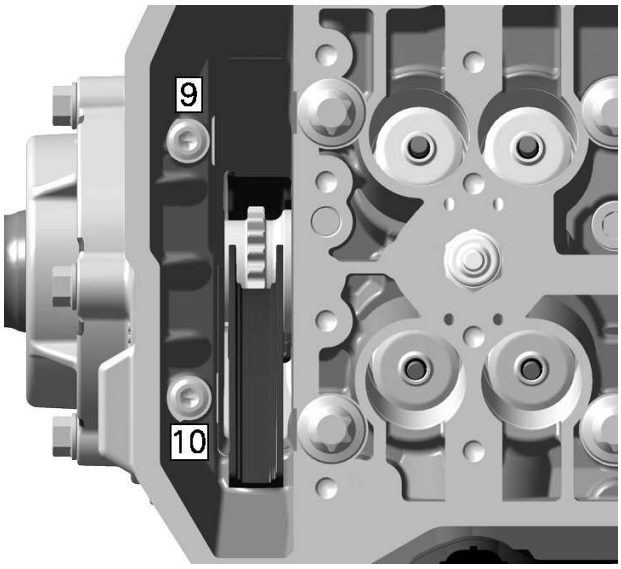


*M6 SCREWS TIGHTENING SEQUENCE*

### *Valve Springs*

#### *Removing the Valve Spring*

1. Remove *Cylinder Head*, see procedure in this subsection.
2. Compress valve spring.

| | |
|---|---|
| **Valve spring compressor (P/N 529035724)** |  |
| **Valve spring compressor cup (P/N 529036209)** |  |

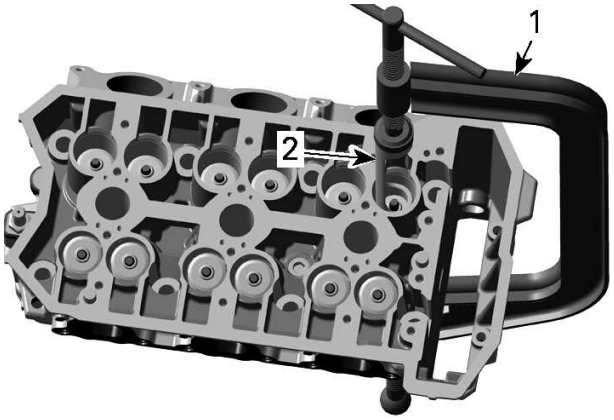


1. *Valve spring compressor clamp*
2. *Valve spring compressor cup*

3. Remove valve cotters.
4. Withdraw valve spring compressor tools.
5. Remove valve spring retainer and valve spring.

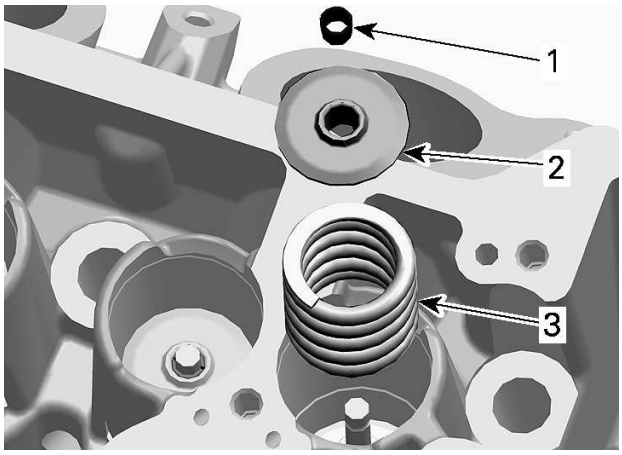


1. *Valve cotters*
2. *Valve spring retainer*
3. *Valve spring*

**NOTE:** Identify the position of each part very carefully, so it can be reinstalled in its original place.

#### *Inspecting the Valve Spring*

1. Check valve spring for rust, corrosion or other visible damage.
2. Check valve spring free length and straightness.

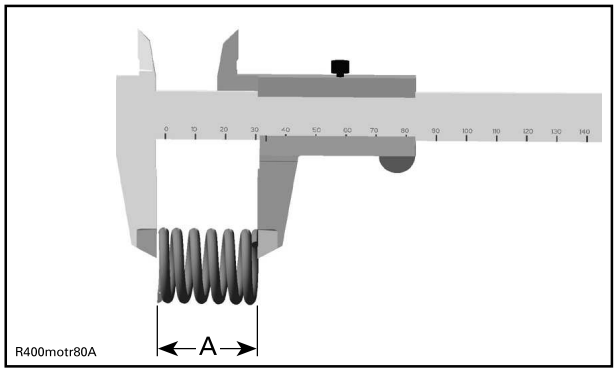


*A. Spring free length*

| Valve Spring Free Length | |
|---|---|
| New | 31.35 mm (1.2343 in) |
| Service limit | 29.50 mm (1.1614 in) |

Replace valve spring, if out of specification.

#### *Installing the Valve Spring*

The installation is the reverse of the removal procedure. However, pay attention to the following.

**NOTE:** Ensure to reinstall all parts in their original position as marked during removal.

1. Apply some grease on valve cotters, so that they remain in place while releasing the valve spring.
2. Make sure valve cotters are properly engaged into valve stem groove.

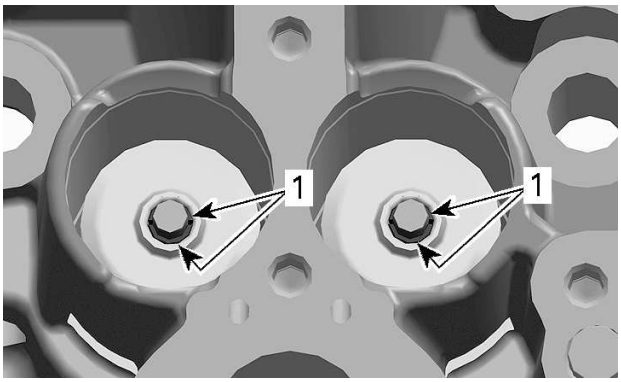


*1. Valve cotters*

3. After spring is installed, ensure it is properly locked by lightly tapping on valve stem end with a soft punch and a hammer so that valve opens and closes a few times.

**NOTICE**

**Improperly locked valve spring will cause severe engine damage and hitting the valve stem end with excessive force could damage the valve.**

### *Valves*

#### *Removing the Valve*

1. Remove *Valve Spring*, see procedure in this subsection.
2. Push on the valve stem, then pull valves out of cylinder head.

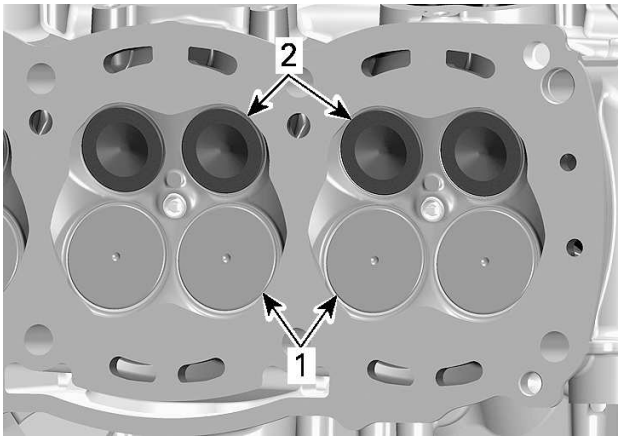


*1. Intake valves 29 mm*
*2. Exhaust valves 25 mm*

3. Remove and discard valve stem seal. Use a valve steam seal pliers available in automotive parts retailers.

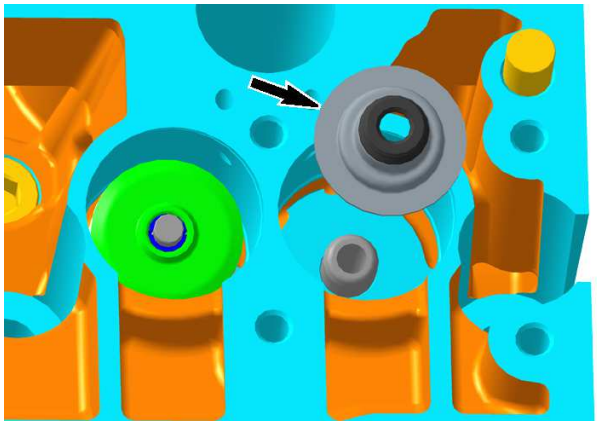

**NOTE:** Identify the position of each part very carefully, so it can be reinstalled in its original place.

#### *Inspecting the Valve*

1. Inspect valve surface, check for abnormal stem wear and bending.

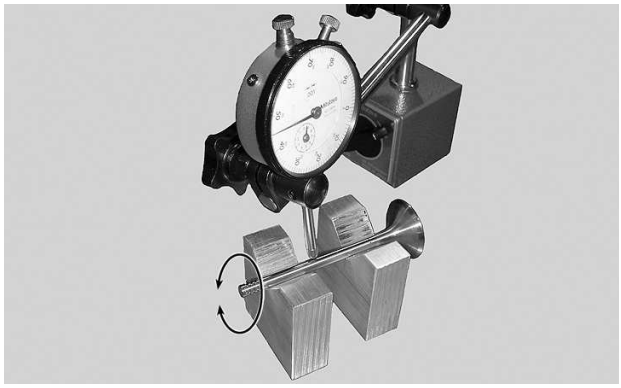

| Valve Out Of Round<br>Intake And Exhaust Valve | |
|---|---|
| New | 0.005 mm<br>(.0002 in) |
| Service limit | 0.060 mm<br>(.0024 in) |

2. Replace valve if out of specification.

#### *Valve Stem and Valve Guide Clearance*

1. Measure valve stem at three places, using a micrometer.

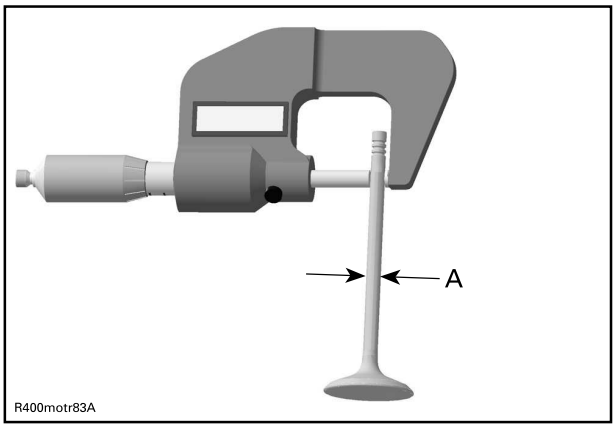


*A. Valves stem diameter*

| Valve Stem Diameter | | |
|---|---|---|
| Intake Valve | New | 4.958 to 4.972 mm (.1952 to .1957 in) |
| | Service limit | 4.940 mm (.1945 in) |
| Exhaust Valve | New | 4.956 to 4.970 mm (.1951 to .1957 in) |
| | Service limit | 4.940 mm (.1945 in) |

2. Replace valve if stem is out of specification or if its surface is damaged or worn.
3. Clean valve guide from carbon deposits.
4. Measure valve guide inner diameter, using a small bore gauge.

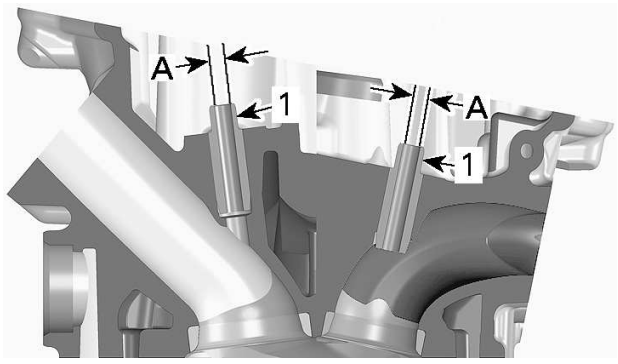


*1. Valves guides*
*A. Valve guide inner diameter*

| Valve Guide Inner Diameter | |
|---|---|
| New | 4.992 to 5.012 mm (.1965 to .1973 in) |
| Service limit | 5.050 mm (.1988 in) |

5. Replace cylinder head, if valve guide is out of specification.

***Valve Face and Seat***

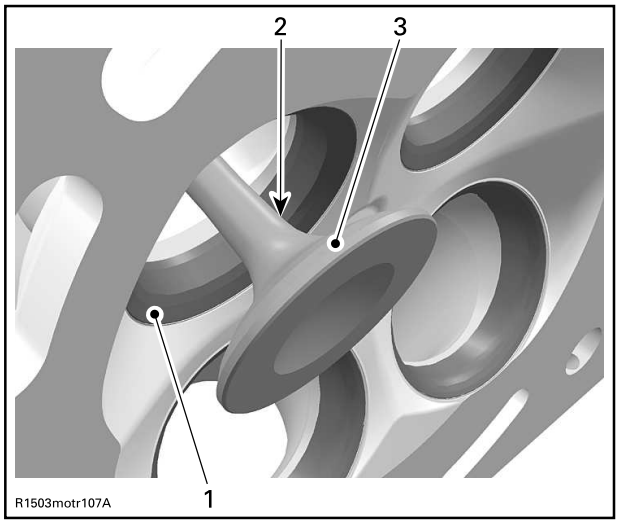


***TYPICAL***
*1. Valve seat*
*2. Exhaust valve contaminated area*
*3. Valve face (contact surface to valve seat)*

1. Check valve face and seat for burning, pitting and other signs of damage.
2. Check if valve seats properly in cylinder head. Proceed as follows.
   1. Apply some lapping compound on valve face and work valve on its seat with a lapping tool.

**NOTE:** The location of contact area should be in center of valve face.

   2. Repeat procedure until valve seat and valve face fit together.
3. Measure valve seat contact width, using a caliper.




Midwest Manuals
Green Manuals
Paperless Manuals
For a Better Tomorrow
www.green-manuals.com
If you bought this manual from any other seller please leave them
NEGATIVE feedback and notify us at bestshopmanuals@gmail.com

*A. Valve face contact width*
*B. Valve seat contact width*

| Valve Seat Contact Width (B) | | |
|---|---|---|
| Intake Valve | New | 1.05 to 1.35 mm (.041 to .053 in) |
| | Service limit | 1.70 mm (.067 in) |
| Exhaust Valve | New | 1.25 to 1.45 mm (.049 to .057 in) |
| | Service limit | 1.80 mm (.071 in) |

Replace parts if out of specification.

### *Installing the Valve*

The installation is the reverse of the removal procedure. However, pay attention to the following.

**NOTICE**

**Ensure to reinstall all parts in their original position as marked during removal.**

1. Install a **NEW** valve stem seal whenever valve is removed.
2. Apply engine oil on valve stem and carefully slide through cylinder head and valve stem seal.

**NOTICE**

**Be careful when passing the valve stem through the sealing lip of the seal.**

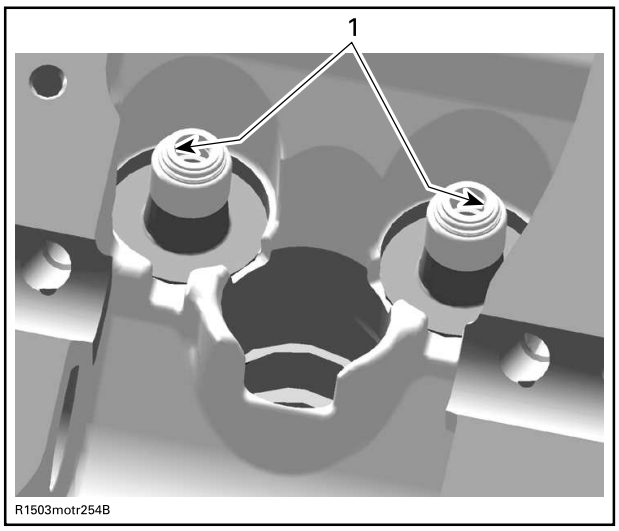


***TYPICAL***
*1. Sealing lips of valve stem seal*

3. Install *Valve Spring*. See procedure in this subsection.
4. Install all other removed parts.

# Cylinder Head - GEN2



## SERVICE TOOLS

| Description | Part Number | Page |
|---|---|---|
| CAMSHAFT LOCKING TOOL(900 ACE) | (P/N 529036206) | 212 |
| ENGINE LEAK DOWN TEST KIT | (P/N 529035661) | 203 |
| FLUKE 115 MULTIMETER | (P/N 529035868) | 205–206 |
| VALVE SPRING COMPRESSOR CUP | (P/N 529036209) | 218 |
| VALVE SPRING COMPRESSOR | (P/N 529035724) | 218 |

## SERVICE PRODUCTS

| Description | Part Number | Page |
|---|---|---|
| DIELECTRIC GREASE | | 207 |
| ENGINE OIL | | 207 |

## *Valve Cover*

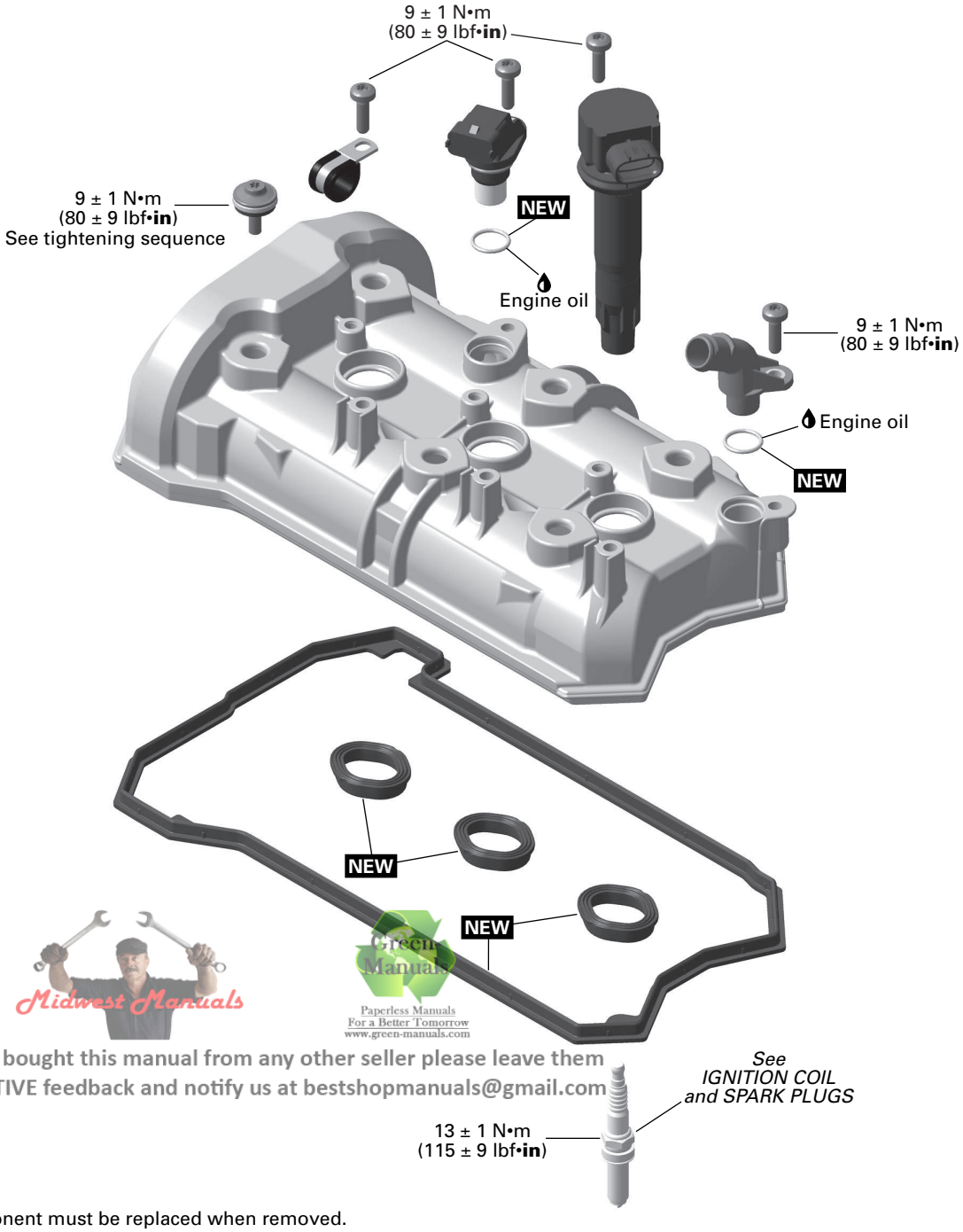


Midwest Manuals
Green Manuals
Paperless Manuals
For a Better Tomorrow
www.green-manuals.com
If you bought this manual from any other seller please leave them
NEGATIVE feedback and notify us at bestshopmanuals@gmail.com

**NEW** = Component must be replaced when removed.

T

### *Camshafts*

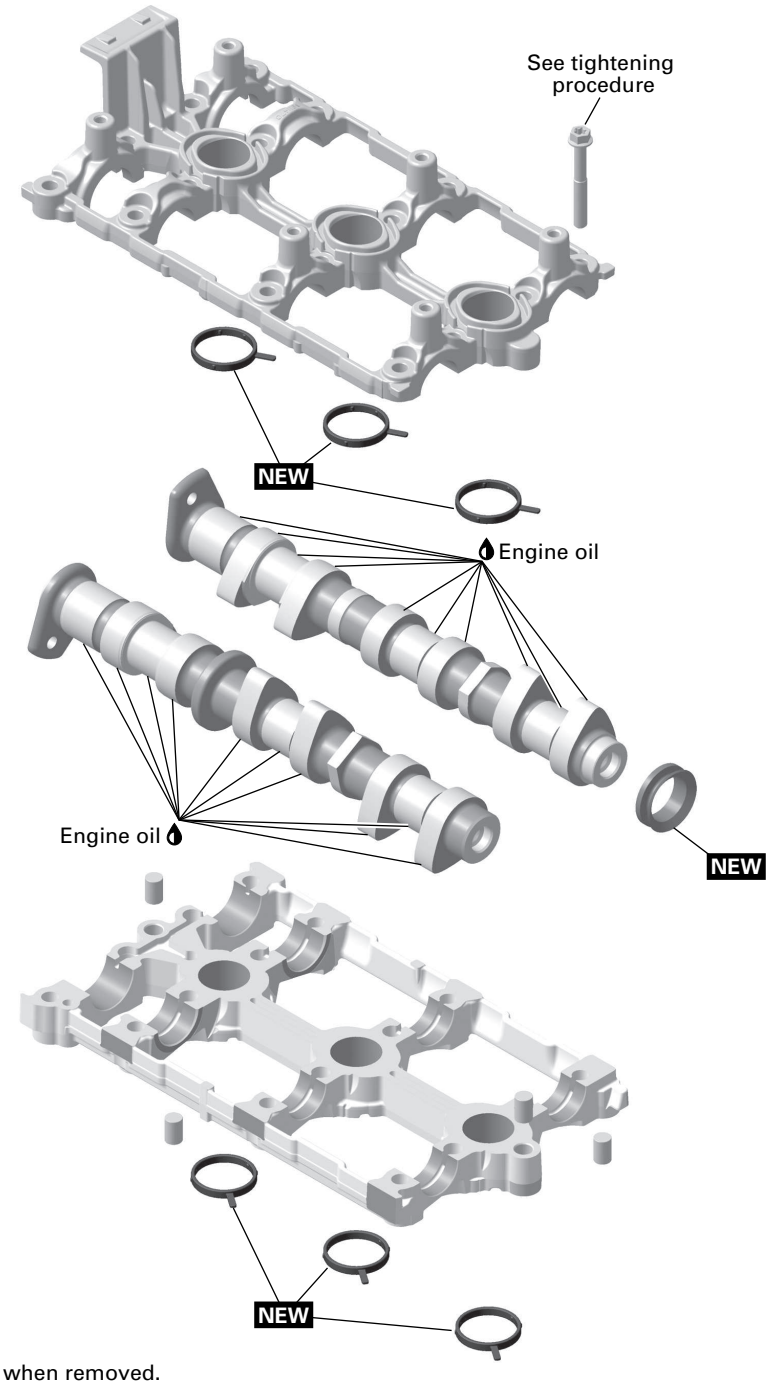


**NEW** = Component must be replaced when removed.

## *Cylinder Head*

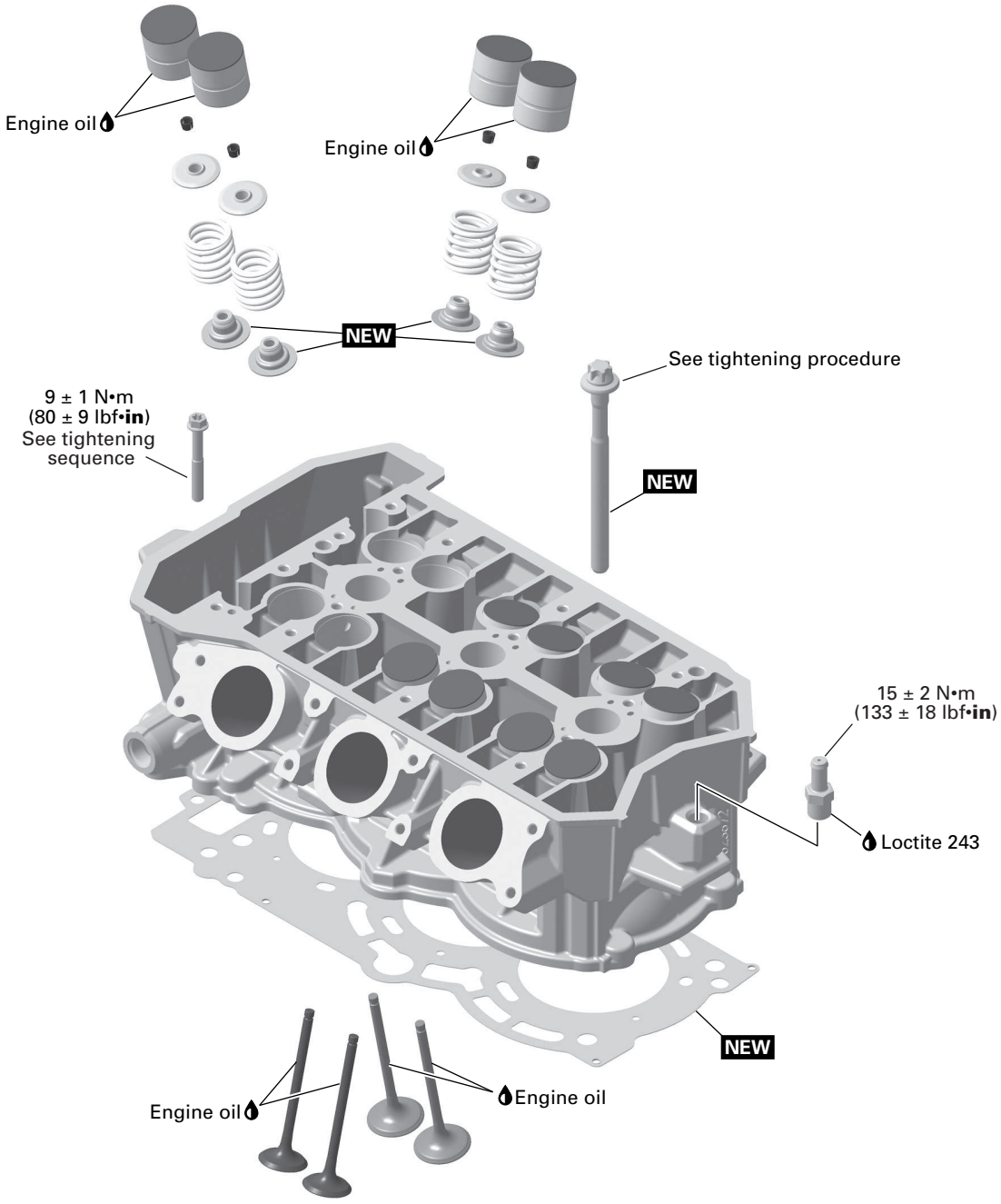


**NEW** = Component must be replaced when removed.

## General

This section refers to the following ECM:

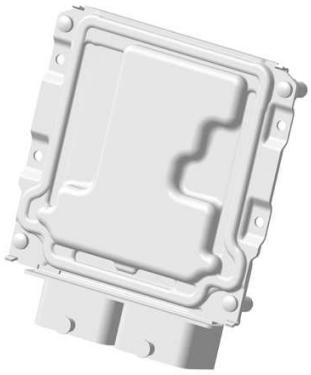

*ECM GEN2 – XCU*

**NOTE:** For a better understanding, some illustrations are taken with engine out of the vehicle.

Disconnect the battery before working on the engine.

**NOTICE**

**Always disconnect BLACK (-) cable first and reconnect last.**

During the assembly or the installation, use the torque values and service products as in the exploded views.

Clean threads before applying a threadlocker. Refer to *Self-Locking Fasteners* and *Loctite Application* at the beginning of this manual for complete procedure.

**⚠ WARNING**

**Torque wrench tightening specifications must be strictly adhered to.**
**Locking devices when removed (e.g.: locking tabs, cotter pin, etc.) must be replaced.**

**NOTICE**

**Hoses, cables or locking ties removed during a procedure must be reinstalled as per factory standards.**

When disassembling parts that are duplicated in the engine, (e. g.: valves, springs, etc.), it is strongly recommended to note their position and to keep the parts of the same assembly as a "group". If you find a defective component, it will be much easier to find the cause of the failure. Since parts were break-in together during the engine operation, they will keep their matched fit when parts are reassemble together within their "group".

## Inspection

### *Cylinder Leak Test*

#### *General*

Before performing the cylinder leak test, verify the following:

– Clamp tightness
– Hoses condition.

**NOTE:** For best accuracy, the leak test should be done with the engine at normal operating temperature.

**⚠ CAUTION**

**Engine parts could be hot.**

**NOTE:** The following steps are the same for each cylinder.

#### *Preparation*

1. Remove the *Valve Cover*, see procedure in this subsection.
2. Remove spark plug.
3. Using the drive pulley, turn the engine counterclockwise to bring piston to TDC of compression stoke. Use a dial gauge or a suitable tool to position the piston to TDC.

**NOTE:** The piston must be set precisely to TDC of compression stroke. If not, the engine will continue to rotate when pressure builds up.

#### *Leak Test*

1. Install a gauge adaptor into spark plug hole.

| | |
|---|---|
| **Engine leak down test kit (P/N 529035661)** |  |

2. Connect the leak down tester to an adequate air supply.
3. Set gauge needle to zero.

**NOTE:** All testers have specific instructions on gauge operation and required pressure. Refer to manufacturer's instructions.

4. Supply combustion chamber with air pressure.
5. Note the amount or percentage of leakage (depending on tester).

| Leakage Percentage | Engine Condition |
|---|---|
| 0% to 15% | Excellent |
| 16% to 25% | Good |
| 26% to 40% | Fair: reduced engine performance |
| 41% and higher | Poor: diagnose and repair engine |

### *Diagnosis*

Listen for air leaks.

- Air escaping on intake port or throttle body means leaking intake valve(s).
- Air escaping on exhaust port means leaking exhaust valve(s).
- Air bubbles out of coolant tank means leaking cylinder head gasket.
- Air or coolant escaping from cylinder head means damaged gasket or loosened screws.
- Air escaping into crankcase area means excessively worn cylinder or broken piston rings.
- Air or oil escaping from crankcase means damaged gasket or loosened screws.

### *Repair Tips*

Blue exhaust gas means damaged or worn piston rings or valve stem seals.

White exhaust gas means damaged cylinder head gasket.

Coolant tank cap opening without overheat means damaged cylinder head gasket.

Leaking valves can be caused by carbon deposits or burnt valve face.

### *Assembly*

Reverse the preparation procedure.

## Troubleshooting

Always check for fault codes. If a fault code is detected, service the fault code first. Refer to *Diagnostic and Fault Codes* subsection.

**NOTE:** When diagnosing an engine problem, always perform the cylinder leak test. This will help pinpoint a problem. Refer to *Cylinder Leak Test* in this subsection.

### *Troubleshooting*

**1. Unusual Engine Noise or Vibrations**

Discharged or defective valve lifters.

– *Check engine oil pressure, refer to Lubrication System - GEN2 subsection.*

– *Replace valve lifters.*

Camshaft(s) or camshaft holder(s) worn out.

– *Check and replace damaged parts.*

Faulty chain tensioner.

– *Replace chain tensioner. Refer to Timing Chain subsection.*

Chain guide(s) worn out.

– *Replace chain guide(s). Refer to Timing Chain subsection.*

Stretched timing chain or worn out sprockets.

– *Replace timing chain and sprockets. Refer to Timing Chain subsection.*

Loose timing chain gear screws.

– *Retighten screws with recommended torque.*

Incorrect camshaft timing.

– *Replace damaged components and readjust camshaft timing.*

**2. Oil Leakage from Cylinder Head**

Leaking valve cover gasket.

– *Replace valve cover gaskets and retighten valve cover with recommended torque.*

– *Check valve cover for cracks or other damage.*

Leaking spark plug tube O-rings.

– *Replace spark plug tube O-rings.*

– *Clean spark plug area from oil spillage.*

Blow-by connector is leaking.

– *Replace blow by connector O-ring.*

Leaking cylinder head gasket.

– *Check cylinder head for damage.*

– *Replace cylinder head gasket and retighten screws with recommended torquing procedure.*

**3. Engine Suddenly Turns Off or Lacks Acceleration or Power**

Incorrect camshaft timing.

– *Replace damaged components and readjust camshaft timing.*

Leaking intake or exhaust valves.

– *Perform a Cylinder Leak Test. Repair or replace damaged components.*

Broken valve spring(s).

– *Replace defective parts.*

## Procedures

### *Camshaft Position Sensor (CAPS)*

#### *CAPS Location*

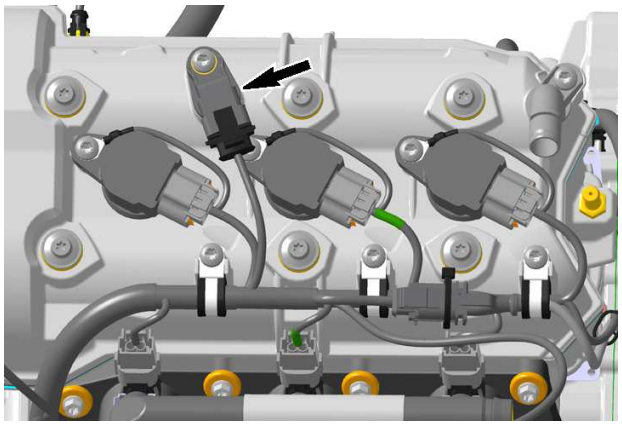

#### *Testing the CAPS Voltage (Harness Side)*

1. Remove the parts required to access the CAPS.
2. Disconnect CAPS connector.

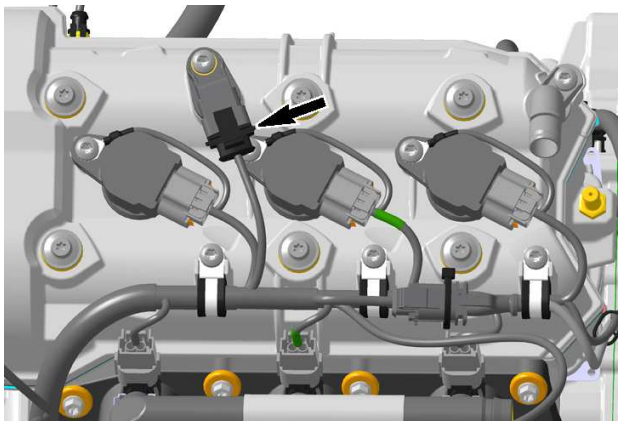

3. Install key on D.E.S.S. post.
4. Press the START/STOP button to wake up the ECM without holding the brakes.
5. Probe harness connector terminals as per following table.

| | |
|---|---|
| **Fluke 115 multimeter (P/N 529035868)** |  |

| CAPS Input Voltage Test | | |
|---|---|---|
| **CAPS Connector Pin** | | **Specification** |
| 1 | 3 | Battery voltage |

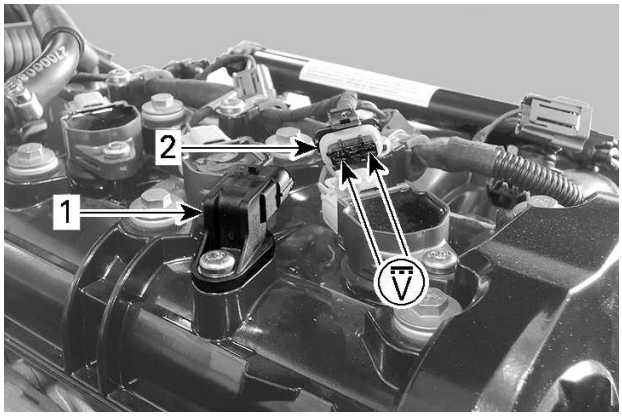


***TYPICAL***
1. *CAPS*
2. *CAPS connector*

6. If battery voltage is read, proceed with *Testing the CAPS (Dynamic)* further in this subsection.
7. If battery voltage is not read, probe circuit as per following table.

| CAPS Input Voltage Test | | |
|---|---|---|
| **CAPS Connector Pin** | **Battery Post** | **Specification** |
| 3 | Negative (-) | Battery voltage |

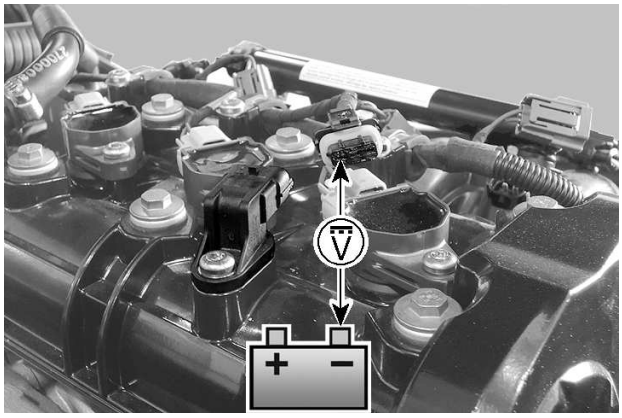


***TYPICAL***

8. If voltage is read to battery ground, check continuity of ground circuit between CAPS pin 1 and ECM-13 connector pin 25. Repair or replace wiring and connectors.
9. If voltage is not read to battery ground, carry out *Testing the Continuity of CAPS Power Circuit*.

### *Testing the CAPS Power Circuit Continuity*

1. Remove the F5 fuse.
2. Use the multimeter and select Ω.

| | |
|---|---|
| **Fluke 115 multimeter (P/N 529035868)** |  |

3. Read resistance of the CAPS circuit as per following table.

| CAPS Power Circuit Continuity Test | | |
|---|---|---|
| **CAPS Connector Pin** | **Fuse Box** | **Specification** |
| 3 | D1 | Close to 0 Ω |

4. If continuity is good, wiring and connectors are functional.
5. If a high resistance or an open circuit is measured, refer to *Wiring Diagram* and check the following:
   - Continuity from CAPS connector pin 3 to HIC connector pin 4.
   - Continuity from HIC connector pin 4 to fuse box contact D1.
6. Pay attention to connector pin contact and junction JT (VT/BU).
7. Repair or replace wiring and connectors as required.
8. Reinstall all removed parts.

### *Testing the CAPS (Dynamic)*

1. Remove the parts required to access the CAPS.
2. Remove CAPS sensor from engine.
3. Back-probe connector and read voltage as follows.

| | |
|---|---|
| **Fluke 115 multimeter (P/N 529035868)** |  |

**NOTICE**

**Do not use sharp end probes. They could damage the connector seal.**

4. Briefly press the START/STOP button to wake up the ECM.
5. Install the D.E.S.S. key on its post.
6. Read voltage as per following tables.

| CAPS Dynamic Voltage Test | | | |
|---|---|---|---|
| **CAPS Condition** | **CAPS Pin** | | **Specification** |
| Free | 1 | 2 | Battery voltage |

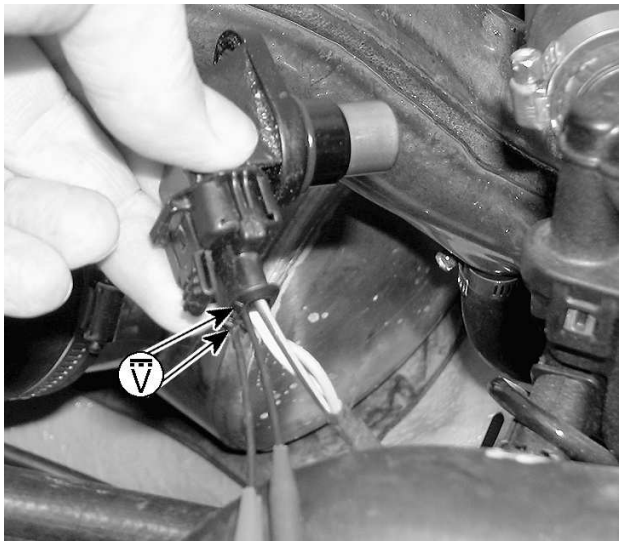

*TYPICAL*

| CAPS Dynamic Voltage Test | | | |
|---|---|---|---|
| **CAPS Condition** | **CAPS Pin** | | **Specification** |
| Metallic object on sensor | 1 | 2 | Close to 0 Vdc |

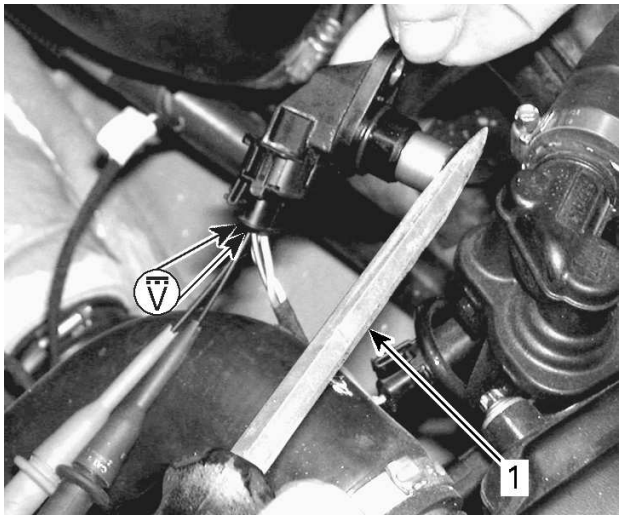


*TYPICAL*
*1. Metallic object*

7. If voltage is as specified, repair or replace wiring and connectors between sensor and ECM.
8. If wiring is good, check ECM. Refer to *Engine Control Module (ECM) - GEN2*.
9. If battery voltage is not measured as specified, try a new CAPS.

### *Replacing the CAPS*

1. Disconnect CAPS connector.

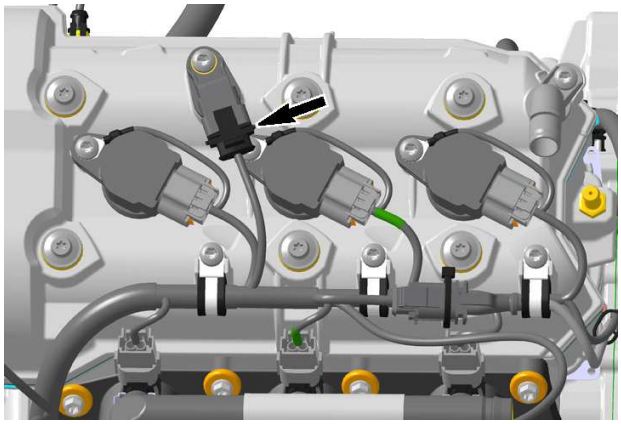

2. Unscrew the CAPS retaining screw.
3. Pull CAPS from engine.
4. Apply engine oil on the sensor O-ring.

| **Engine oil** |
|---|

| **NOTICE** |
|---|
| **Be sure to install new O-ring on the new CAPS.** |

5. Install the new CAPS.

| **Tightening Torque** | |
|---|---|
| CAPS retaining screw | 9 ± 1 Nm<br>(80 ± 9 lbf-in) |

6. Apply dielectric grease in the CAPS connectors.

| **Dielectric grease** |
|---|

### *Valve Cover*

### *Removing the Valve Cover*

1. Remove the upper body module. Refer to *body* subsection.
2. Remove pulley guard.
3. Remove the exhaust manifold.
4. Disconnect vent tube from the blow-by connector.

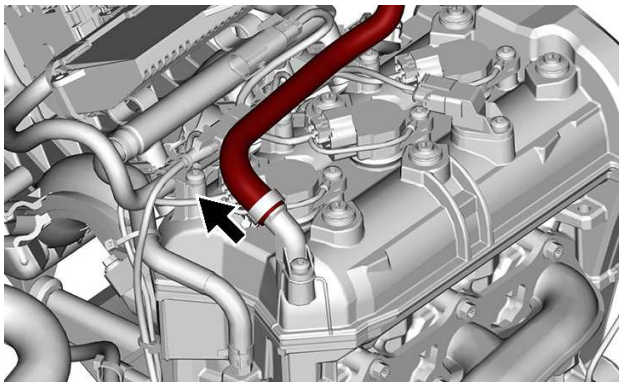

5. Remove ignition coils. Refer to *Ignition Coils and Spark Plugs - GEN2* subsection.
6. Disconnect the CAPS.
7. Remove screws securing the electrical harness to the valve cover.

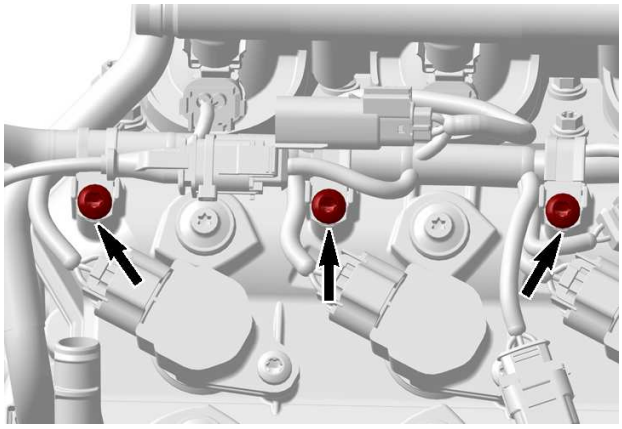

8. Remove valve cover retaining screws.

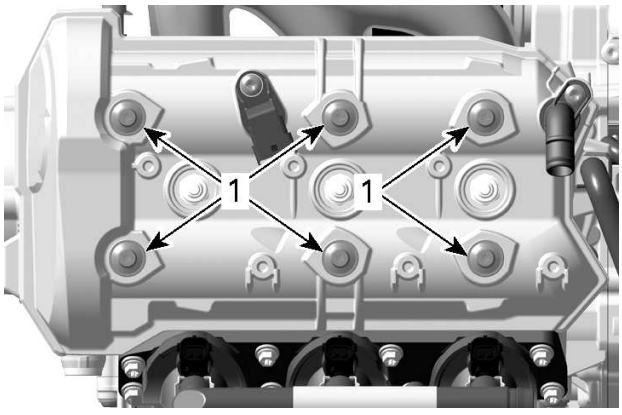


*1. Valve cover screws*

9. Lift and tilt valve cover with gasket towards front of engine.

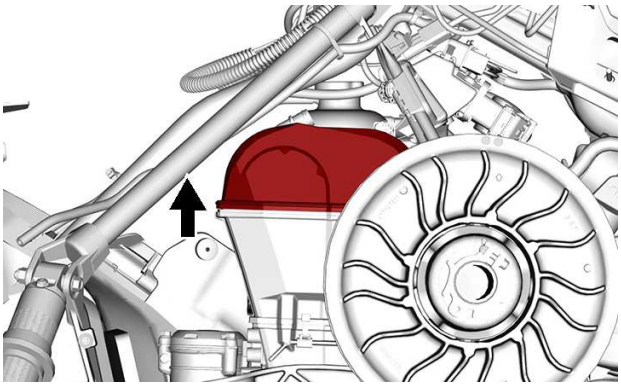

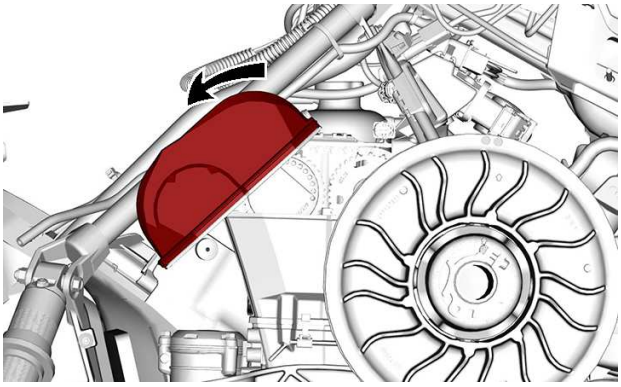

10. Pull valve cover and gasket out through LH side of vehicle.

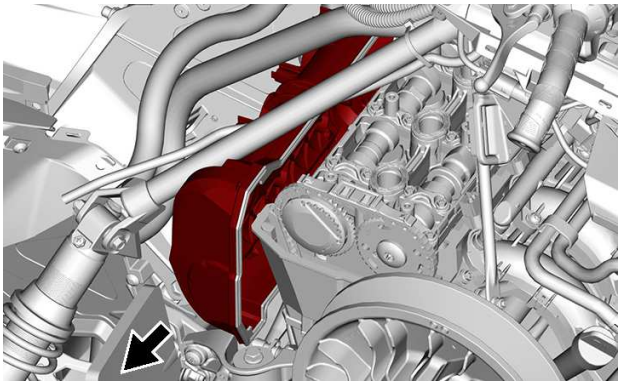

11. Remove and discard the valve cover gasket and the small gaskets around spark plug holes.

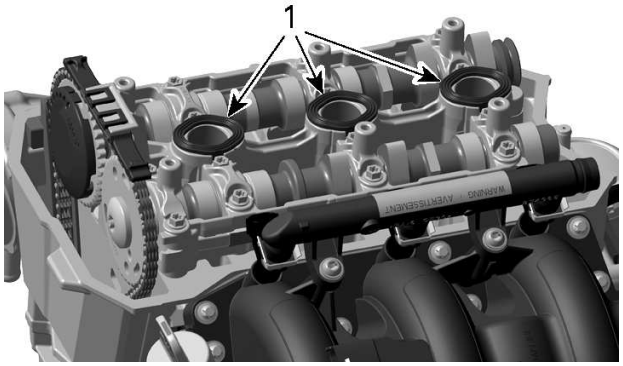


*1. Spark plug hole gaskets*

### *Inspecting the Valve Cover*

Check the valve cover for cracks or other damage.

Replace defective parts.

### *Installing the Valve Cover*

The installation is the reverse of the removal procedure. However, pay attention to the following.

1. Properly fit the **NEW** small gaskets into the camshaft holder grooves.
2. Properly lay the **NEW** large gasket onto the cylinder head flat surface.
3. Apply engine oil to the sealing surface of the V-ring.




***INSIDE VALVE COVER***
*1. Apply engine oil here*

4. Install valve cover.

**NOTICE**

**Adhere to the following procedure, otherwise damage to the V-ring will occur causing crankcase venting malfunction.**

1. Move the valve cover towards the MAG side.

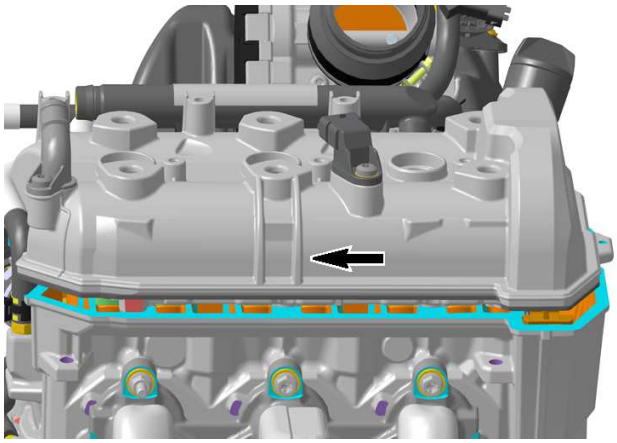

2. Put valve cover onto cylinder head.

**NOTICE**

**Make sure the valve cover gasket is well positioned in the cover groove.**

3. Push valve cover towards the PTO side to ensure that the V-ring properly seals on sealing surface inside the cover.

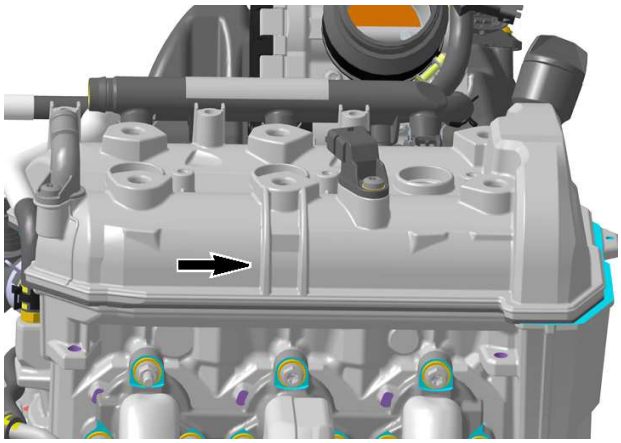

5. Install valve cover screws and tighten as per following sequence:

| Tightening Torque | | |
|---|---|---|
| Valve cover screws | Step A | 9 ± 1 Nm (80 ± 9 lbf-in) |
| | Step B | 9 ± 1 Nm (80 ± 9 lbf-in) |

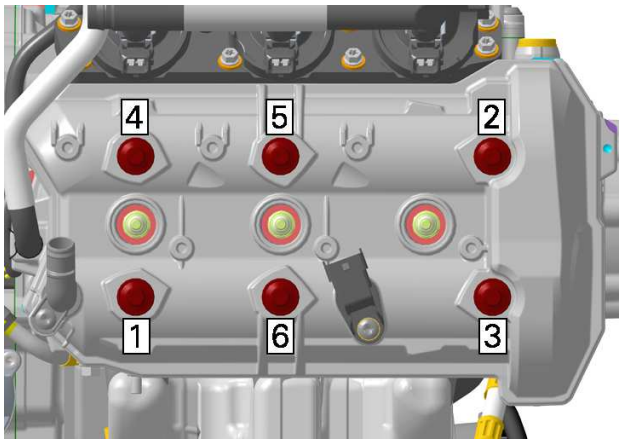


*TIGHTENING SEQUENCE*

### *Camshafts*

#### *Removing the Camshaft*

1. Remove *Valve Cover*, see procedure in this subsection.
2. Lock crankshaft, refer to *Crankshaft Locking Procedure* in the *Cylinder Block - GEN2* subsection.

   Remove timing chain tensioner. Refer to *Timing Chain* subsection.
3. Remove:
   1. Breather cover

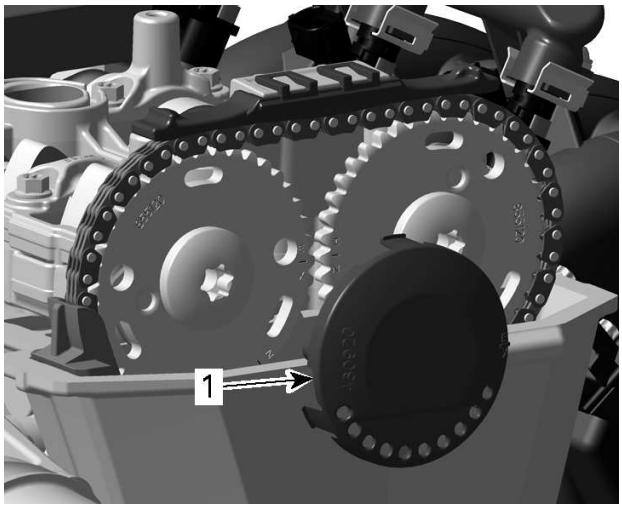


*i. Breather cover*

   2. Upper timing chain guide
   3. Timing chain guide.

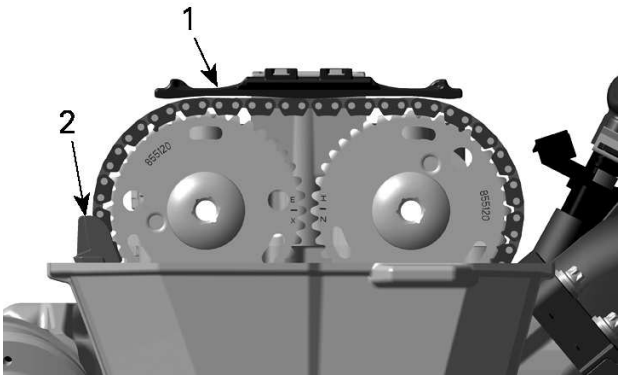


*i. Upper timing chain guide*
*ii. Timing chain guide*

4. Remove timing chain from camshaft timing gears.
5. Remove camshaft holder retaining screws (x16).

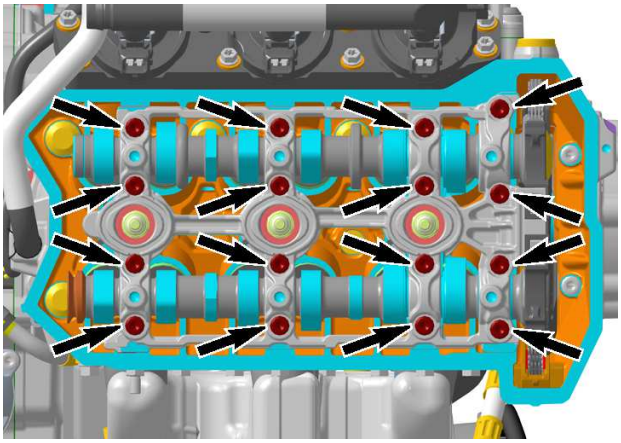

6. Remove the camshaft holder upper half.

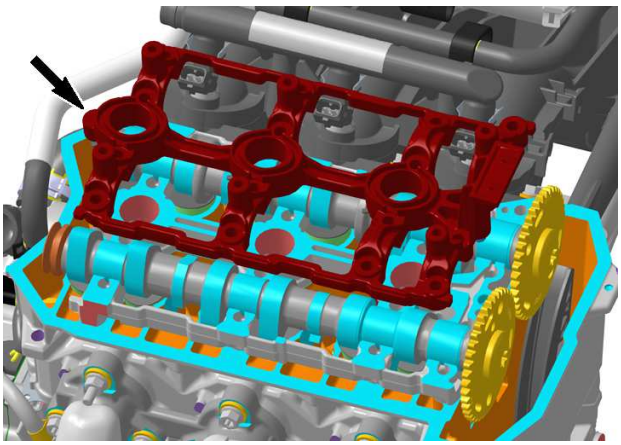

7. Put timing chain aside.
8. Remove camshafts with timing gears.

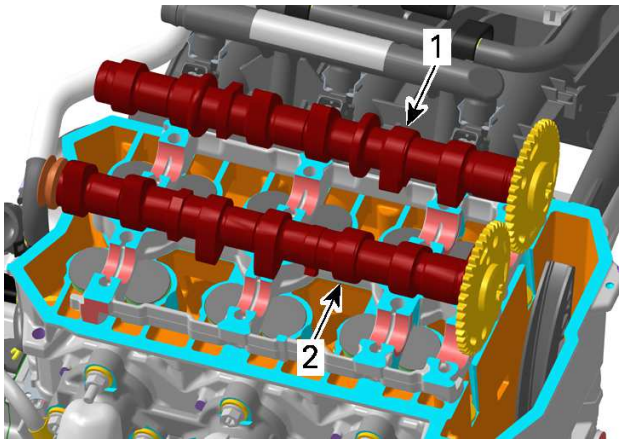


*1. Intake camshaft*
*2. Exhaust camshaft*

**NOTE:** Remove camshaft timing gears only if necessary. Refer to *Timing Chain* subsection.

### *Inspecting the Camshaft*

1. Check each lobe and bearing journal for scoring, scuffing, cracks, or other signs of wear.
2. Check V-ring if it is brittle, hard or otherwise damaged.
3. Measure camshaft bearing journal diameter and lobe height, using a micrometer.

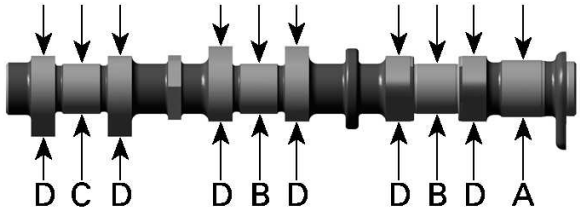


*A. Camshaft journal (PTO)*
*B. Camshaft journal (center)*
*C. Camshaft journal (MAG)*
*D. Camshaft lobes*

| Camshaft Journal Diameter | | |
|---|---|---|
| PTO Journal (A) | New | 25.967 to 25.980 mm (1.0223 to 1.0228 in) |
| | Service limit | 25.940 mm (1.0213 in) |
| Center Journals (B) | New | 22.957 to 22.970 mm (.9038 to .9043 in) |
| | Service limit | 22.930 mm (.9028 in) |
| MAG Journal (C) | New | 22.967 to 22.980 mm (.9042 to .9047 in) |
| | Service limit | 22.940 mm (.9031 in) |

| Camshaft Lobe Height | | |
|---|---|---|
| Intake Camshaft (D) | New | 37.40 to 37.60 mm (1.472 to 1.48 in) |
| | Service limit | 38.38 mm (1.511 in) |
| Exhaust Camshaft (D) | New | 38.35 to 38.55 mm (1.51 to 1.518 in) |
| | Service limit | 38.33 mm (1.509 in) |

Replace parts if necessary.

For camshaft journal radial clearance and camshaft holder bearing diameter refer to *Camshaft Holder* in this subsection.

4. Check timing chain guide for wear, cracks or deformation. Replace as required.
5. Replace timing chain guide if any groove caused by timing chain exceeds service limit.

| Chain Guide Groove Depth | |
|---|---|
| Service limit | 1 mm (.039 in) |

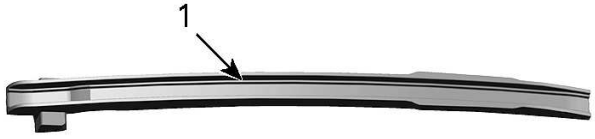


*1. Timing chain guide*

### *Installing the Camshaft*

The installation is the reverse of the removal procedure. However, pay attention to the following.

1. Ensure crankshaft is still locked.
2. Apply engine oil on camshaft bearings.

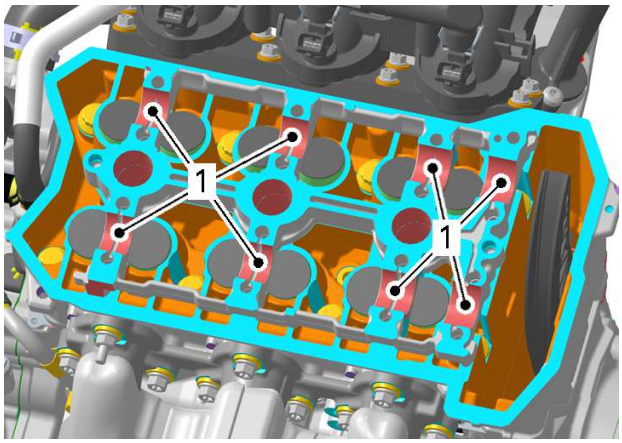


*1. Areas where to apply engine oil*

**NOTE:** The camshafts are not identical. Any mix-up of the components would lead to engine damage. The exhaust camshaft has a machined area on MAG side for the V-ring.

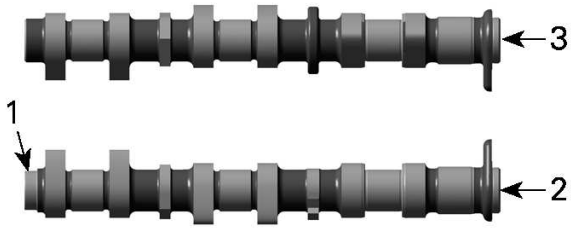


*1. Machined area*
*2. Exhaust camshaft*
*3. Intake camshaft*

3. If removed, reinstall camshaft timing gears on camshafts. Refer to *Camshaft Timing Gears* in the *Timing Chain* subsection.
4. Apply engine oil on camshaft journal diameter.
5. Install exhaust camshaft assembly with mark "EX" parallel to cylinder head gasket.

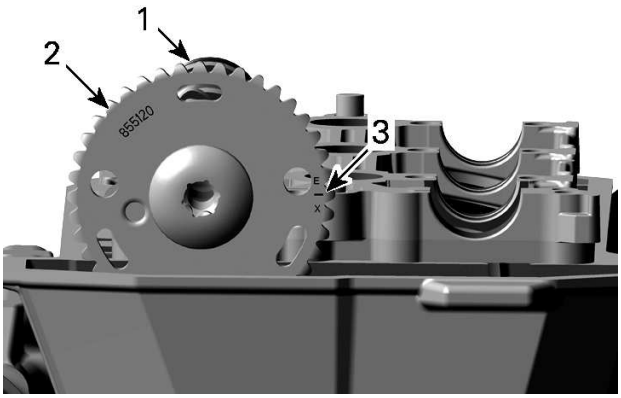


1. *Exhaust camshaft*
2. *Camshaft timing gear*
3. *Mark "EX"*

6. Install intake camshaft assembly with mark "IN" parallel to cylinder head gasket.

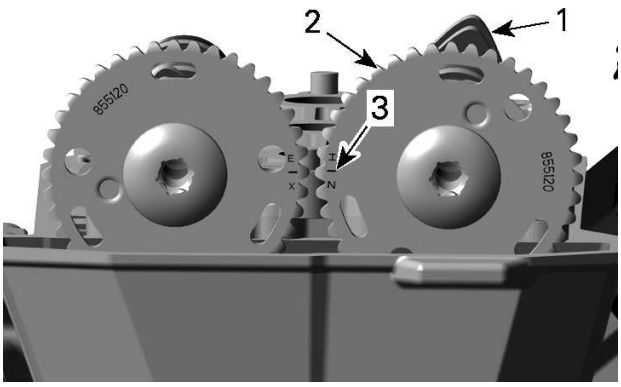


1. *Intake camshaft*
2. *Camshaft timing gear*
3. *Mark "IN"*

7. Install upper half of camshaft holder , then tighten screws as per following sequence:

| Tightening Torque | | |
|---|---|---|
| Camshaft Holder | Step A | 5 ± 0.5 Nm (44 ± 4 lbf-in) |

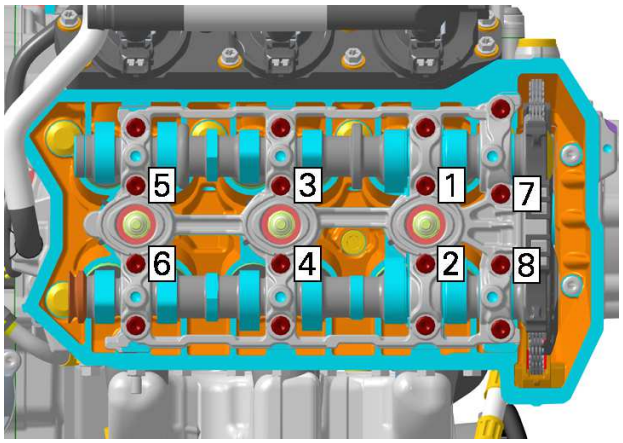


***CAMSHAFT HOLDER TIGHTENING SEQUENCE - STEP A***

| Tightening Torque | | |
|---|---|---|
| Camshaft Holder | Step B | 9 ± 1 Nm (80 ± 9 lbf-in) |

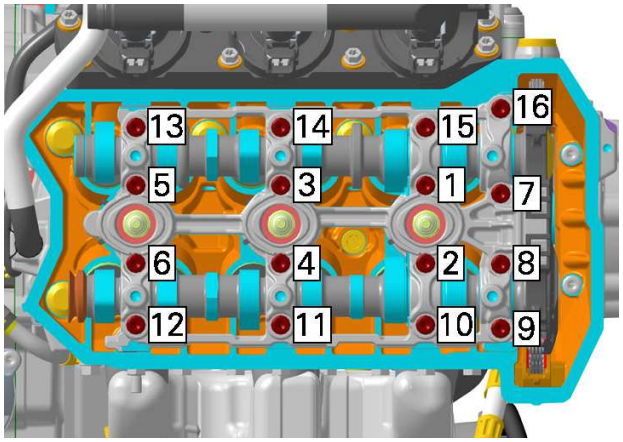


***CAMSHAFT HOLDER TIGHTENING SEQUENCE - STEP B***

**NOTE:** After reassembly of the camshafts is completed, check if camshafts can be turned easily.

8. Lock camshafts.

| | |
|---|---|
| **Camshaft locking tool (900 ACE) (P/N 529036206)** |  |

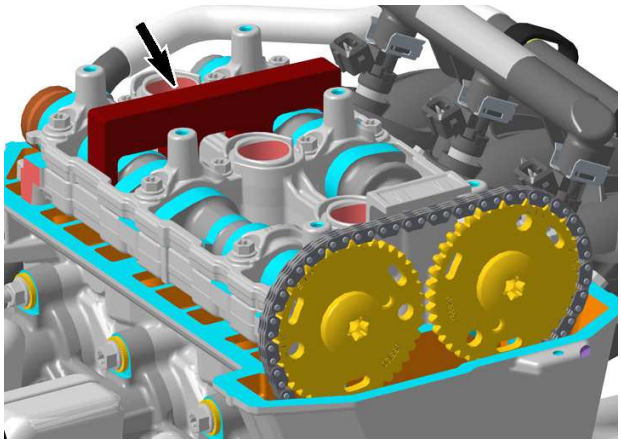

9. Lift timing chain out of timing chain compartment.
10. Pull timing chain up on exhaust side and install it on the exhaust camshaft timing gear.

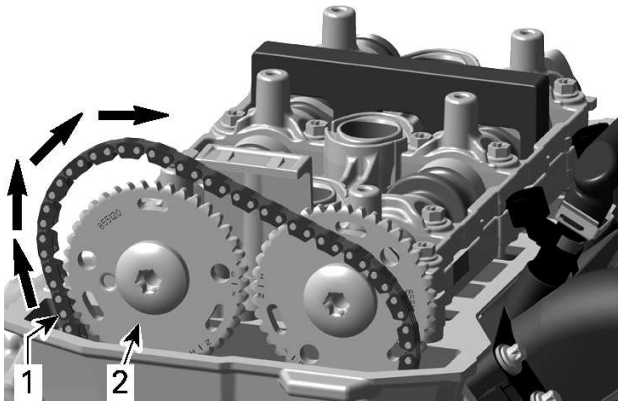


1. *Timing chain*
2. *Exhaust camshaft timing gear*

11. Pull timing chain towards intake side and install it on the intake camshaft timing gear.

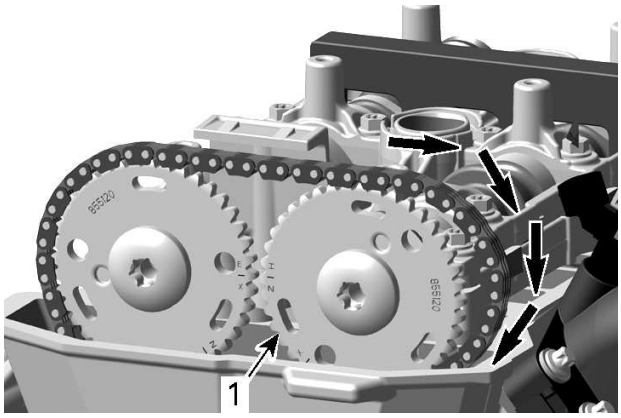


1. *Intake camshaft timing gear*

12. Install timing chain guide.

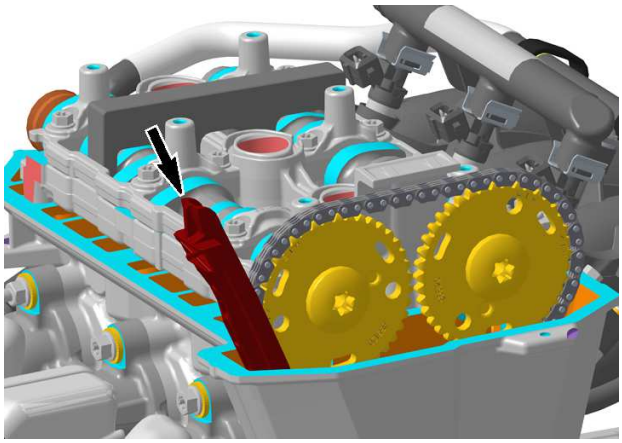

13. Install upper timing chain guide on camshaft holder.

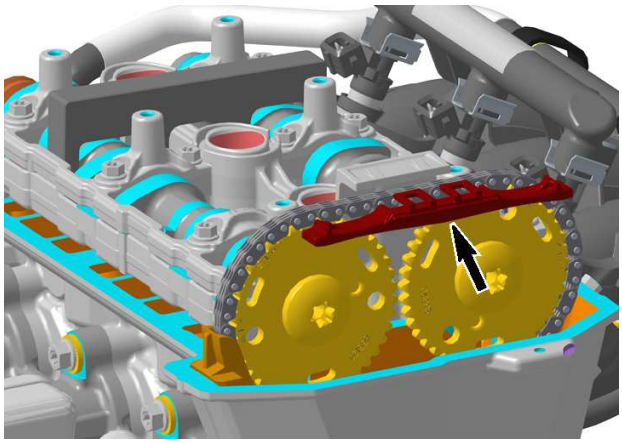

14. Install *Timing Chain Tensioner*, refer to *Timing Chain* subsection.
15. Ensure marks on camshaft timing gears are still aligned. If not, repeat procedure.

**NOTICE**

**After installation of timing chain tensioner, the marks "IN" on intake and "EX" on exhaust camshafts must be aligned.**

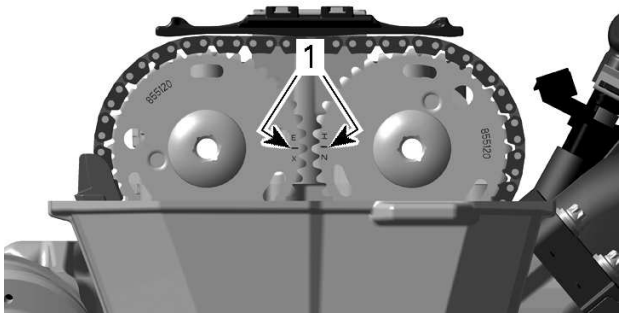


***CAMSHAFT TIMING GEARS***
1. *Marks must be aligned*

16. Install breather cover.

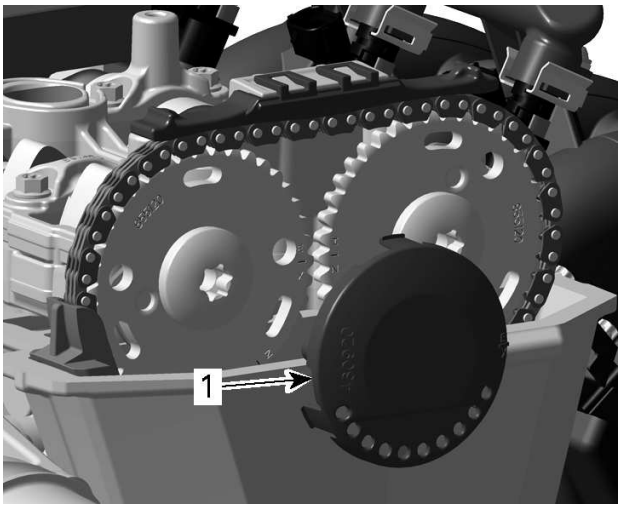


*1. Breather cover*

17. Remove camshaft locking tool.

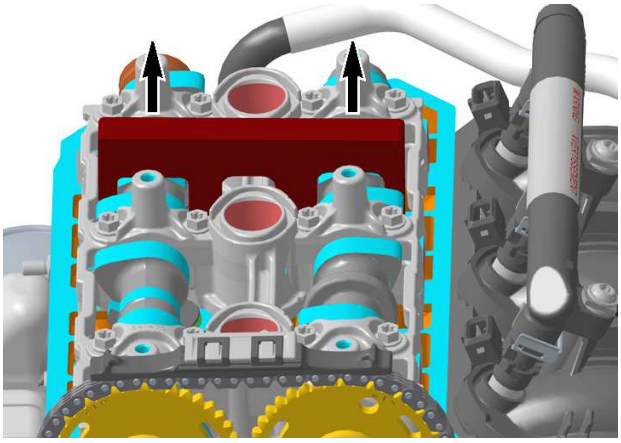

18. Remove crankshaft locking tool.

### *Camshaft Holder*

#### *Removing the Camshaft Holder*

1. Remove camshafts, see procedure in this subsection.
2. Remove the camshaft holder lower half with gaskets from cylinder head.
3. Remove and discard gaskets from camshaft holder halves.

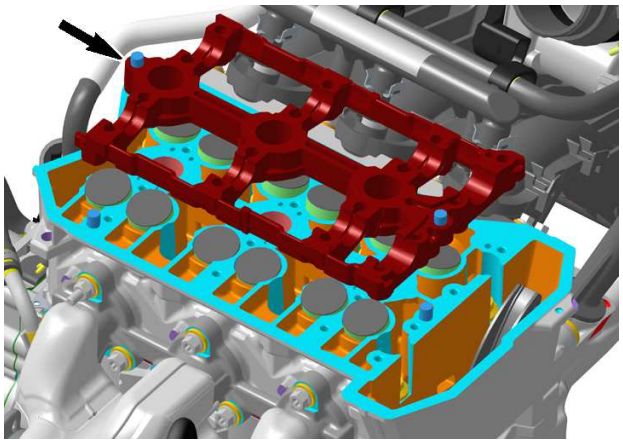

#### *Inspecting the Camshaft Holder*

1. Check camshaft holder for scoring, scuffing, cracks, or other signs of wear.
2. Make sure oil orifices are not clogged. Blow them out with pressurized air.

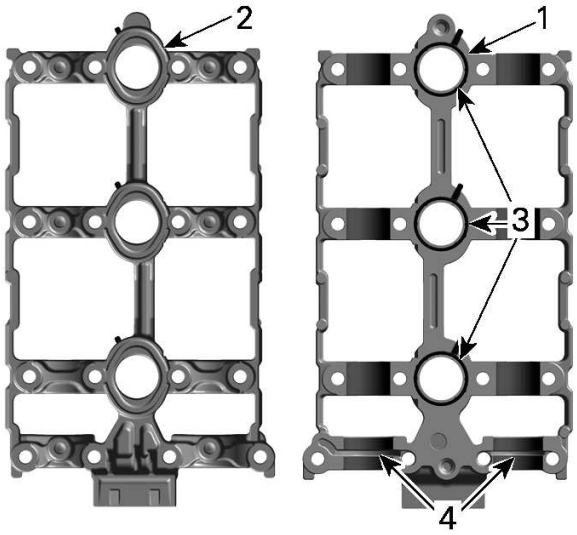


*1. Camshaft holder upper half - view from beneath*
*2. Camshaft holder upper half - view from above*
*3. Gaskets*
*4. Oil orifices*

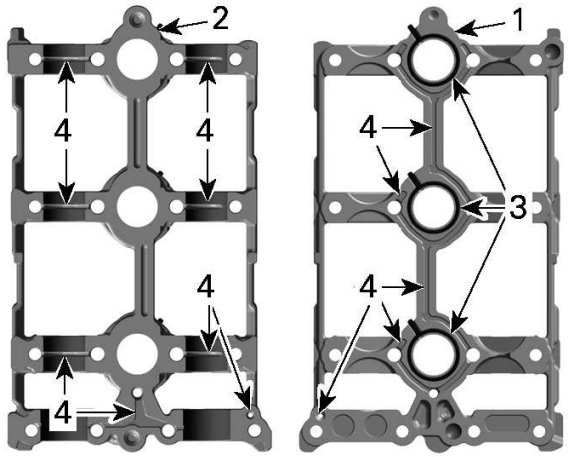


*1. Camshaft holder lower half - view from beneath*
*2. Camshaft holder lower half - view from above*
*3. Gaskets*
*4. Oil orifices*

Install camshaft holder on cylinder head.

Tighten camshaft holder screws to specification, refer to *Installing the Camshaft* in this subsection.

Measure camshaft holder bearing diameter.

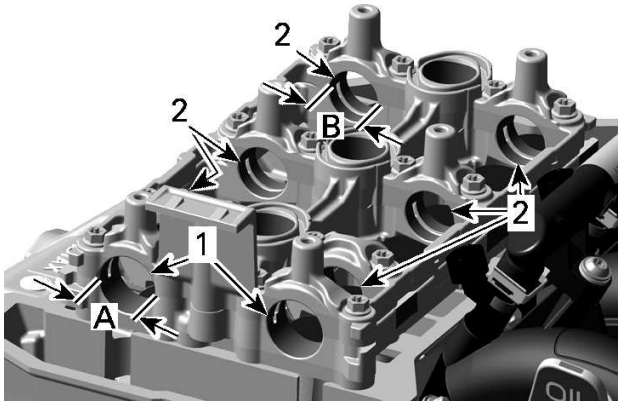


***CAMSHAFT HOLDER BEARINGS***
*1. PTO bearings*
*2. Center and MAG bearings*
*A. Diameter PTO bearing*
*B. Diameter center and MAG bearing*

| Camshaft Holder Bearing Diameter | | |
|---|---|---|
| PTO Bearing | New | 26.000 to 26.021 mm (1.024 to 1.024 in) |
| | Service limit | 26.050 mm (1.026 in) |
| Center and MAG Bearings | New | 23.000 to 23.021 mm (.906 to .906 in) |
| | Service limit | 23.050 mm (.907 in) |

Measure clearance between camshaft journals and camshaft holder, using the plastic feeler gauge.

**NOTE:** The plastic feeler gauge is available at automotive parts retailer.

Install camshaft holder lower half on cylinder head.

Place the camshafts in the camshaft holder lower half and apply a plastic-gauge on the camshaft bearing journal.

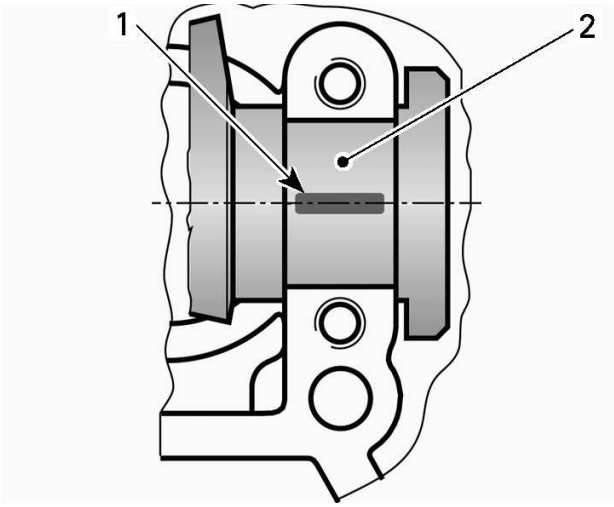


***TYPICAL***
*1. Plastic gauge*
*2. Camshaft bearing journal*

Install camshaft holder upper half in its proper position and tighten screws to specification, refer to *Installing the Camshaft* in this subsection.

Unfasten camshaft holder.

Measure the maximum width of the pressed plastic gauge with the corresponding graduated scale.

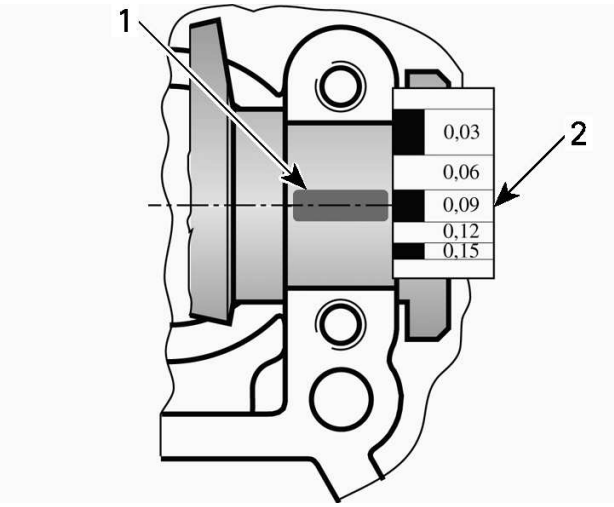


*TYPICAL*
1. *Pressed plastic gauge*
2. *Graduated scale*

| Camshaft Journal Radial Clearance | | |
|---|---|---|
| PTO and MAG Bearing | New | 0.020 to 0.054 mm (.001 to .002 in) |
| | Service limit | 0.080 mm (.003 in) |
| Center Bearing | New | 0.03 to 0.064 mm (.001 to .003 in) |
| | Service limit | 0.090 mm (.004 in) |

Replace parts if necessary.

### *Installing the Camshaft Holder*

Install camshaft holder lower half.

Continue procedure as explained in *Installing the Camshaft* in this subsection.

### *Hydraulic valve lifters*

### *Removing the Hydraulic Valve Lifter*

**NOTE:** Hydraulic valve lifter are maintenance free.

1. See procedures in this subsection to remove:
   - Valve cover
   - Camshafts
   - Camshaft holder.
2. Pull hydraulic valve lifter off the cylinder head.

**NOTE:** When disassembling the hydraulic valve lifter, it is strongly recommended to note their original position.

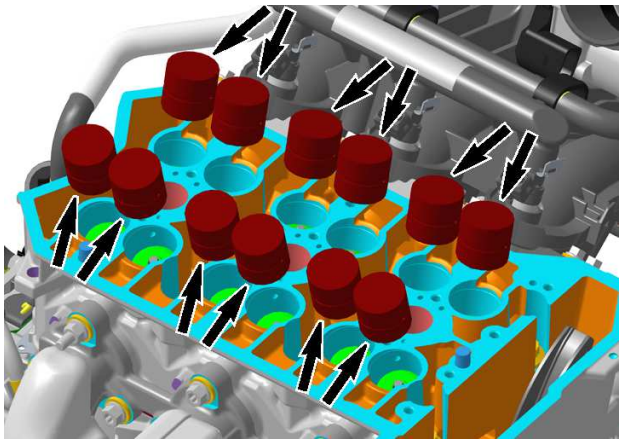

### *Inspecting the Hydraulic Valve Lifter*

1. Check surface of hydraulic valve lifter for scoring or other damage.
2. Measure valve lifter diameter. Replace if out of specification.

| Hydraulic Valve Lifter | |
|---|---|
| New | 28.354 to 28.370 mm (1.1163 to 1.1169 in) |
| Service limit | 28.340 mm (1.1157 in) |

| Hydraulic Valve Lifter Radial Clearance | |
|---|---|
| Service limit | 0.100 mm (.0039 in) |

### *Installing the Hydraulic Valve Lifter*

The installation is the reverse of the removal procedure. However, pay attention to the following.

1. Apply engine oil on the outside diameter of the hydraulic valve lifter.

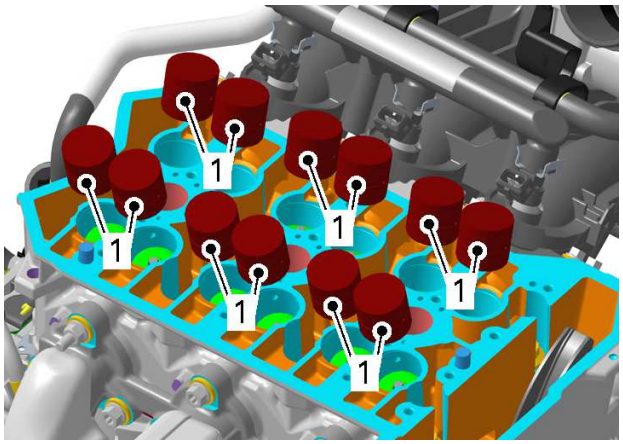


1. *Apply engine oil on outer diameter*

## *Cylinder Head*

### *Removing the Cylinder Head*

1. Remove the engine from the vehicle. Refer to *Engine Removal and Installation* subsection.
2. See procedures in this subsection to remove:
   - Valve cover
   - Camshafts
   - Camshaft holder
   - Hydraulic valve lifters.
3. Remove M6 cylinder head screws.

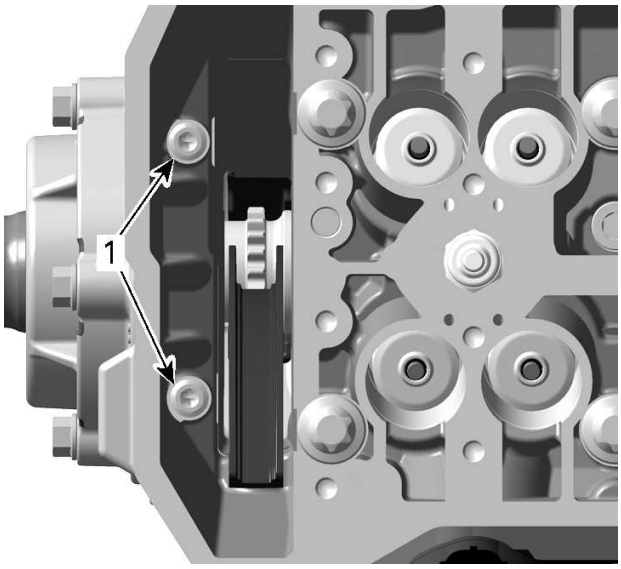


*1. Remove M6 cylinder head screws*

4. Remove and discard M9 cylinder head screws.

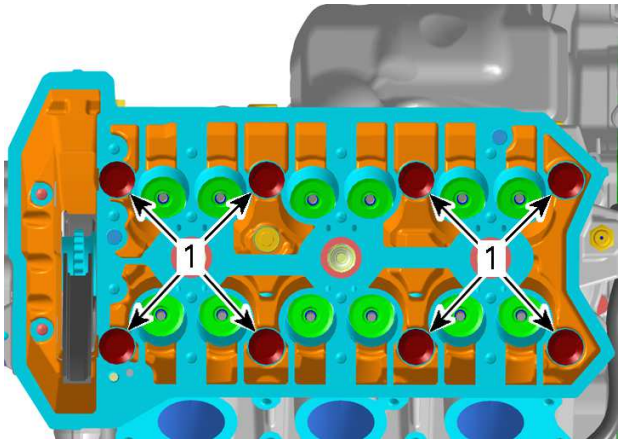


*1. Remove M9 cylinder head screws*

5. Pull cylinder head off the cylinder block.
6. Remove and discard cylinder head gasket.

### *Cleaning the Cylinder Head*

1. Remove carbon deposits from combustion chambers, exhaust ports and piston tops.
2. Clean cylinder head, especially cylinder head screw surface from oil spillage.
3. Blow out the oil orifices with pressurized air and make sure they are not clogged.

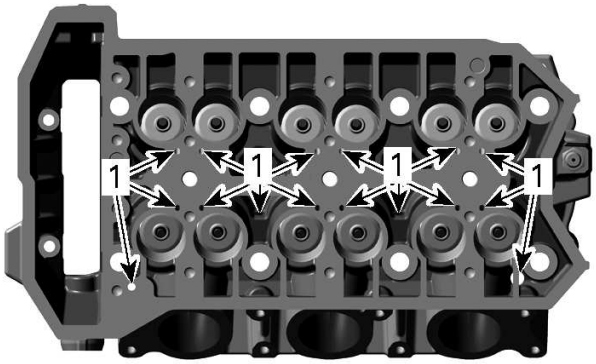


*1. Oil orifices*

### *Inspecting the Cylinder Head*

1. Check for cracks between valve seats or other damage, if so, replace cylinder head.
2. Check cylinder head mating surface for flatness using a straight edge.
3. Check hydraulic valve lifter bores for scoring or other damage, if so, replace cylinder head.

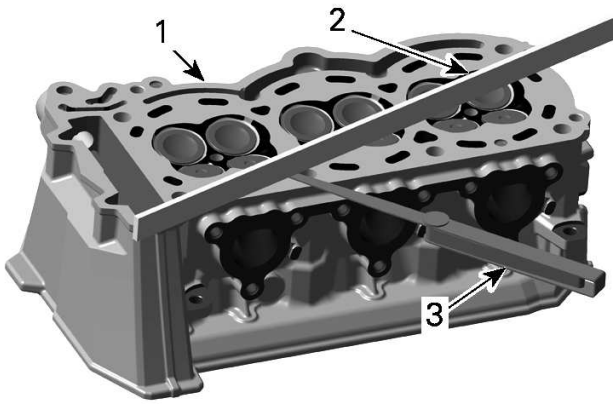


*1. Cylinder head*
*2. Straight edge*
*3. Feeler gauge*

4. Check for cylinder head warping.

| Cylinder Head Warpage | |
|---|---|
| Service limit | 0.15 mm (.0059 in) |

5. If warping exceeds specification, resurface the cylinder head as follows.
6. Use a 400 - 600 grit wet sandpaper on a surface plate and gently grind off the mating surface.

**NOTE:** To ensure an even surface, rotate cylinder head several times during resurfacing.

7. Replace cylinder head, if resurfacing fails.

### *Installing the Cylinder Head*

The installation is the reverse the removal procedure. However, pay attention to the following.

1. Install a **NEW** cylinder head gasket.

| NOTICE |
| --- |
| **Each installation of the cylinder head requires a NEW cylinder head gasket. Using a gasket twice would cause engine damage.** |

2. Install cylinder head on the cylinder block.
3. Install **NEW** M9 cylinder head screws.

| NOTICE |
| --- |
| **This assembly uses stretch screws. Always use NEW screws and strictly adhere to the tightening procedure.** |

4. Tighten cylinder head screws as follows:

**NOTE:** Always perform step A on all M9 cylinder head screws before going to the step B.

| Tightening Procedure | | |
| --- | --- | --- |
| Cylinder head M9 screws | Step A | 20 ± 2 Nm (15 ± 1 lbf-ft) |
| | Step B | Additional 150° ± 5° |

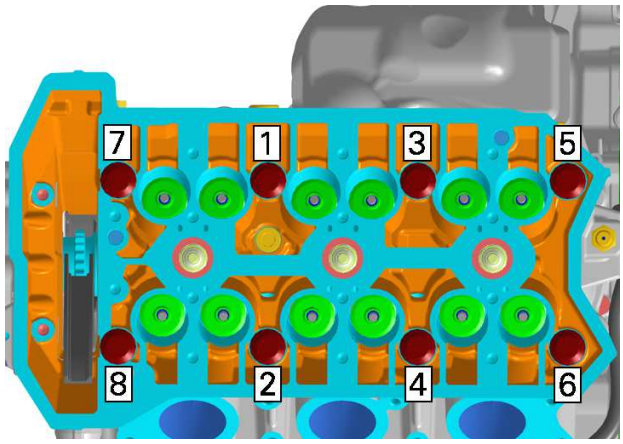


*M9 SCREWS TIGHTENING SEQUENCE*

**NOTE:** Use a torque angle gauge to carry out **Step B**.

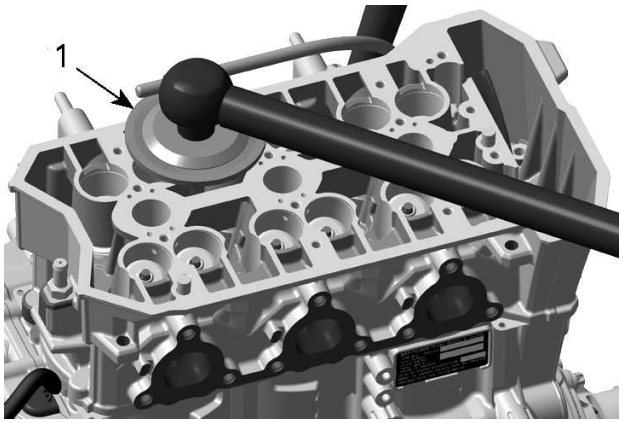


*1. Torque angle gauge*

5. Install M6 screws. Tighten as follows.

| Tightening Torque | |
| --- | --- |
| Cylinder head M6 screws | 9 ± 1 Nm (80 ± 9 lbf-in) |

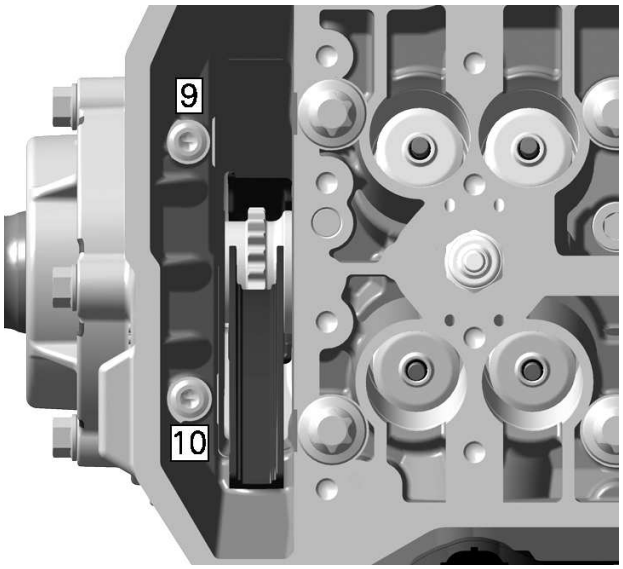


*M6 SCREWS TIGHTENING SEQUENCE*

### *Valve Springs*

### *Removing the Valve Spring*

1. Remove *Cylinder Head*, see procedure in this subsection.
2. Compress valve spring.

| | |
| --- | --- |
| **Valve spring compressor (P/N 529035724)** |  |
| **Valve spring compressor cup (P/N 529036209)** |  |

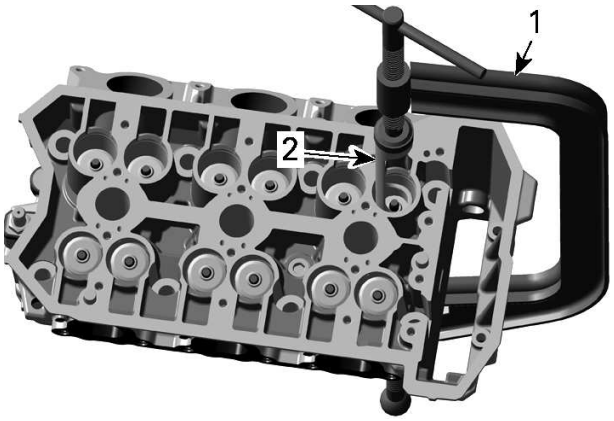


1. *Valve spring compressor clamp*
2. *Valve spring compressor cup*

3. Remove valve cotters.
4. Withdraw valve spring compressor tools.
5. Remove valve spring retainer and valve spring.

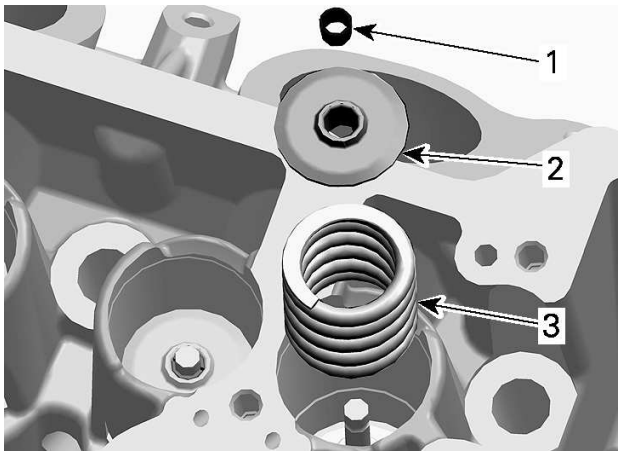


1. *Valve cotters*
2. *Valve spring retainer*
3. *Valve spring*

**NOTE:** Identify the position of each part very carefully, so it can be reinstalled in its original place.

### *Inspecting the Valve Spring*

1. Check valve spring for rust, corrosion or other visible damage.
2. Check valve spring free length and straightness.

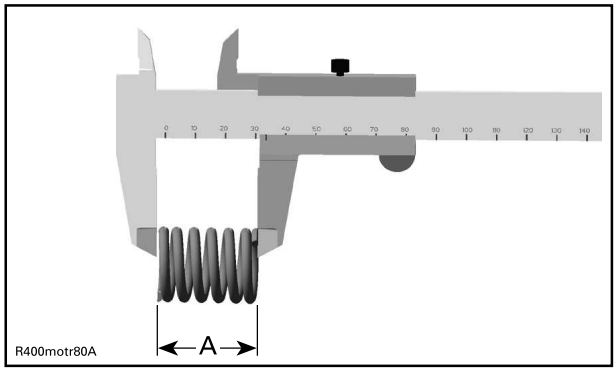


*A. Spring free length*

| Valve Spring Free Length | |
|---|---|
| New | 31.35 mm (1.2343 in) |
| Service limit | 29.50 mm (1.1614 in) |

Replace valve spring, if out of specification.

### *Installing the Valve Spring*

The installation is the reverse of the removal procedure. However, pay attention to the following.

**NOTE:** Ensure to reinstall all parts in their original position as marked during removal.

1. Apply some grease on valve cotters, so that they remain in place while releasing the valve spring.
2. Make sure valve cotters are properly engaged into valve stem groove.

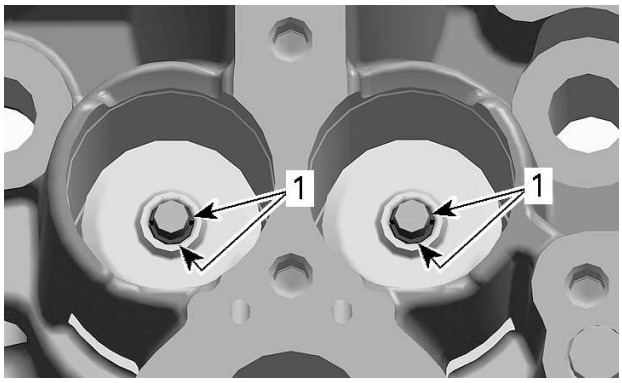


1. *Valve cotters*

3. After spring is installed, ensure it is properly locked by lightly tapping on valve stem end with a soft punch and a hammer so that valve opens and closes a few times.

**NOTICE**

**Improperly locked valve spring will cause severe engine damage and hitting the valve stem end with excessive force could damage the valve.**

### *Valves*

#### *Removing the Valve*

1. Remove *Valve Spring*, see procedure in this subsection.
2. Push on the valve stem, then pull valves out of cylinder head.

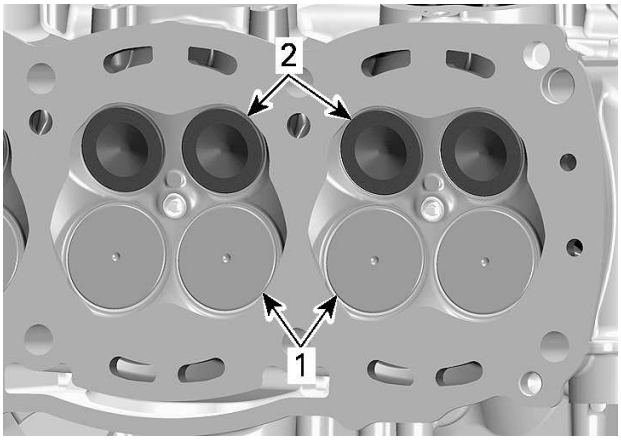


*1. Intake valves 29 mm*
*2. Exhaust valves 25 mm*

3. Remove and discard valve stem seal. Use a valve stem seal pliers available in automotive parts retailers.

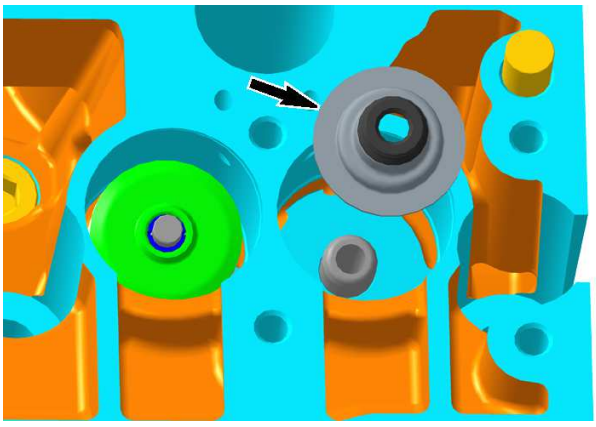

**NOTE:** Identify the position of each part very carefully, so it can be reinstalled in its original place.

#### *Inspecting the Valve*

Inspect valve surface, check for abnormal stem wear and bending.

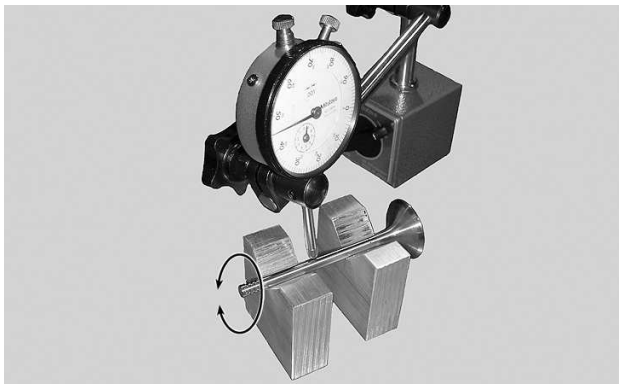

| Valve Out Of Round<br>Intake And Exhaust Valve | |
|---|---|
| New | 0.005 mm<br>(.0002 in) |
| Service limit | 0.060 mm<br>(.0024 in) |

Replace valve if out of specification.

#### *Valve Stem and Valve Guide Clearance*

1. Measure valve stem at three places, using a micrometer.

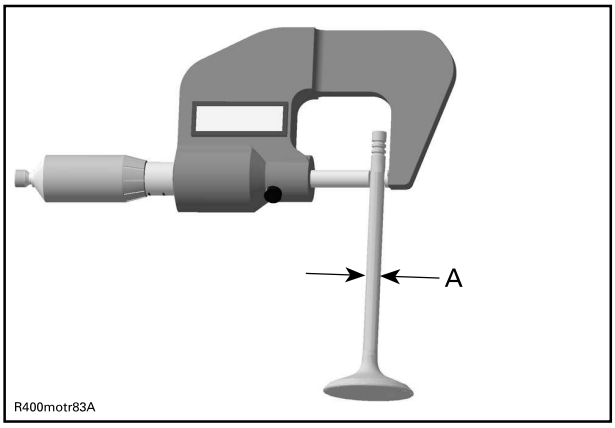


*A. Valves stem diameter*

| Valve Stem Diameter | | |
|---|---|---|
| Intake Valve | New | 4.958 to 4.972 mm<br>(.1952 to .1957 in) |
| | Service limit | 4.940 mm<br>(.1945 in) |
| Exhaust Valve | New | 4.956 to 4.970 mm<br>(.1951 to .1957 in) |
| | Service limit | 4.940 mm<br>(.1945 in) |

Replace valve if stem is out of specification or if its surface is damaged or worn.

2. Clean valve guide from carbon deposits.
3. Measure valve guide inner diameter, using a small bore gauge.

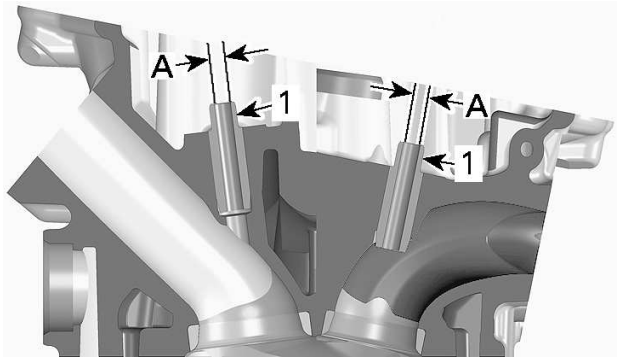


*1. Valve guides*
*A. Valve guide inner diameter*

| Valve Guide Inner Diameter | |
|---|---|
| New | 4.992 to 5.012 mm (.1965 to .1973 in) |
| Service limit | 5.050 mm (.1988 in) |

Replace cylinder head, if valve guide is out of specification.

### *Valve Face and Seat*

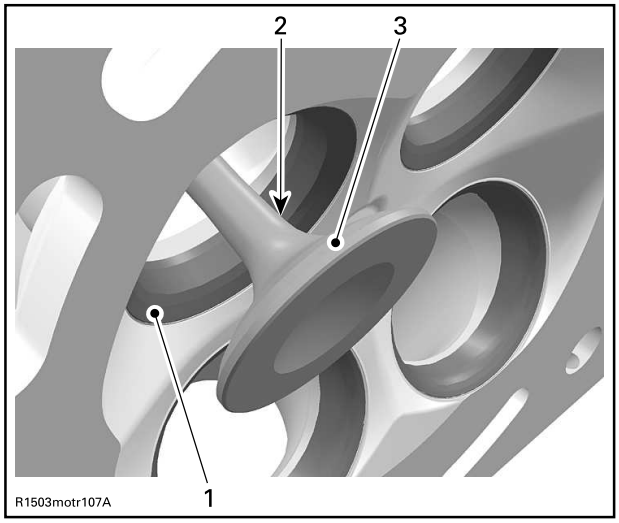


***TYPICAL***
*1. Valve seat*
*2. Exhaust valve contaminated area*
*3. Valve face (contact surface to valve seat)*

1. Check valve face and seat for burning, pitting and other signs of damage.
2. Check if valve seats properly in cylinder head. Proceed as follows.
   1. Apply some lapping compound on valve face and work valve on its seat with a lapping tool.

**NOTE:** The location of contact area should be in center of valve face.

   2. Repeat procedure until valve seat and valve face fit together.
3. Measure valve seat contact width, using a caliper.




Midwest Manuals
Green Manuals
Paperless Manuals
For a Better Tomorrow
www.green-manuals.com
If you bought this manual from any other seller please leave them NEGATIVE feedback and notify us at bestshopmanuals@gmail.com

*A. Valve face contact width*
*B. Valve seat contact width*

| Valve Seat Contact Width (B) | | |
|---|---|---|
| Intake Valve | New | 1.05 to 1.35 mm (.041 to .053 in) |
| | Service limit | 1.70 mm (.067 in) |
| Exhaust Valve | New | 1.25 to 1.45 mm (.049 to .057 in) |
| | Service limit | 1.80 mm (.071 in) |

Replace parts if out of specification.

### *Installing the Valve*

The installation is the reverse of the removal procedure. However, pay attention to the following.

**NOTICE**

**Ensure to reinstall all parts in their original position as marked during removal.**

1. Install a **NEW** valve stem seal whenever valve is removed.

2. Apply engine oil on valve stem and carefully slide through cylinder head and valve stem seal.

**NOTICE**

**Be careful when passing the valve stem through the sealing lip of the seal.**

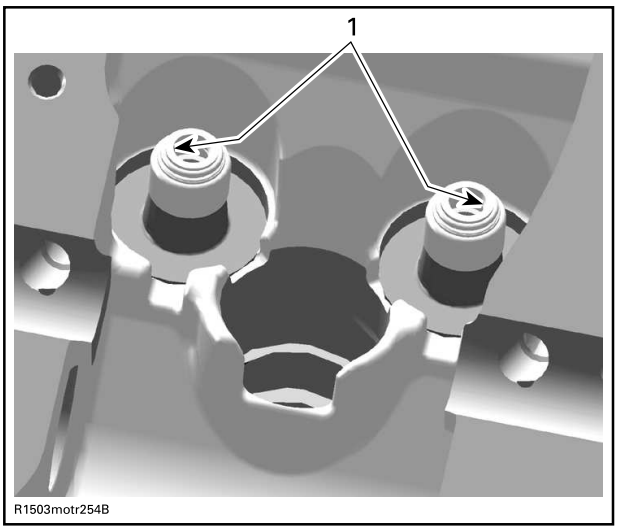


***TYPICAL***
*1. Sealing lips of valve stem seal*

3. Install *Valve Spring*. See procedure in this subsection.
4. Install all other removed parts.

# Cylinder Block - 600ACE



## SERVICE TOOLS


| Description | Part Number | Page |
|---|---|---|
| CRANKSHAFT LOCKING TOOL | (P/N 529036205) | 234 |
| CRANKSHAFT PROTECTOR (PTO) | (P/N 420876552) | 226 |
| PISTON CIRCLIP INSTALLER | (P/N 529036207) | 240 |
| PISTON RING COMPRESSOR | (P/N 529036208) | 242 |
| PTO OIL SEAL INSTALLER | (P/N 529036216) | 227 |


## SERVICE PRODUCTS


| Description | Part Number | Page |
|---|---|---|
| LOCTITE 5910 | | 232 |
| LOCTITE CHISEL (GASKET REMOVER) | | 230 |
| SUPER LUBE GREASE | | 227 |

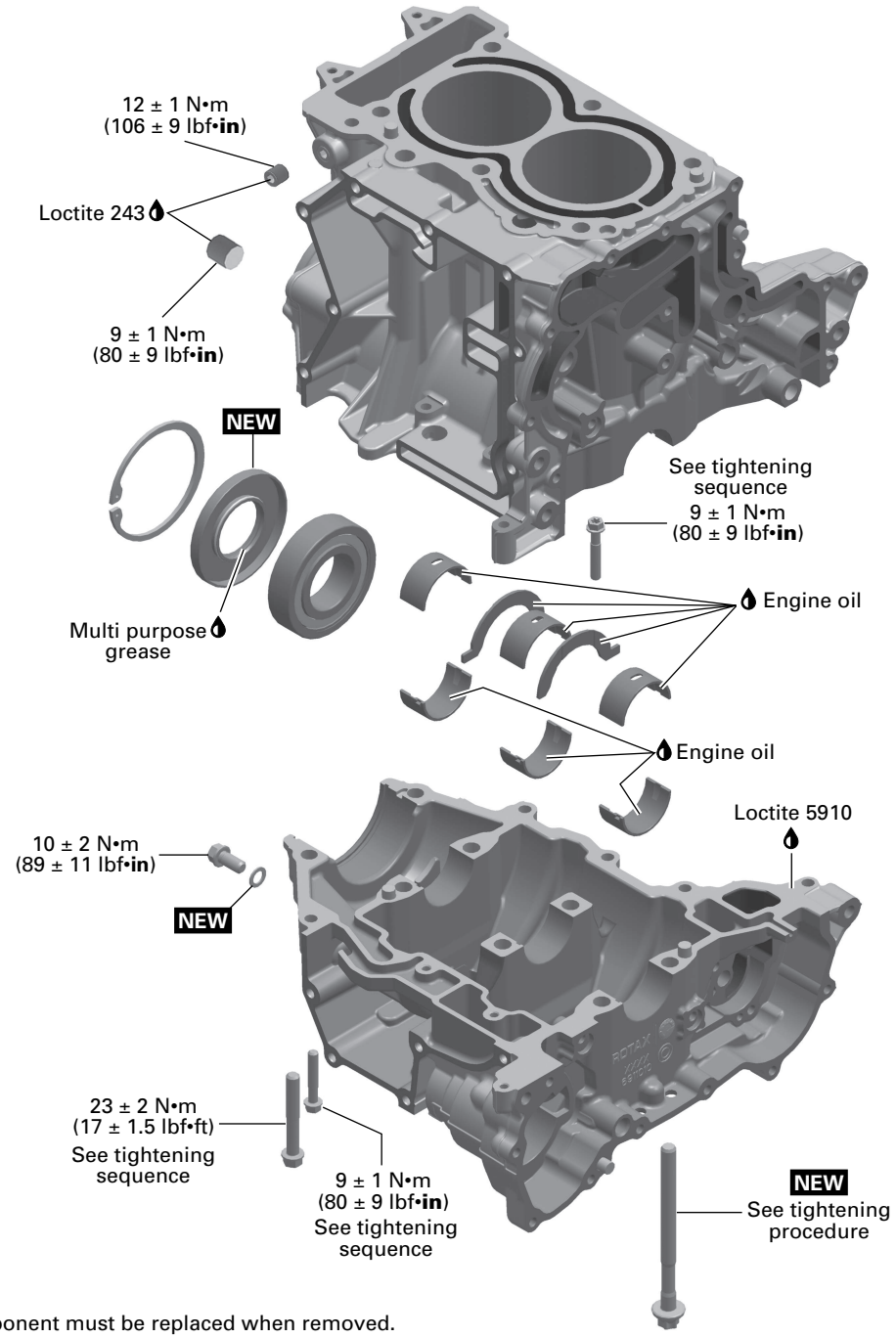


**NEW** = Component must be replaced when removed.

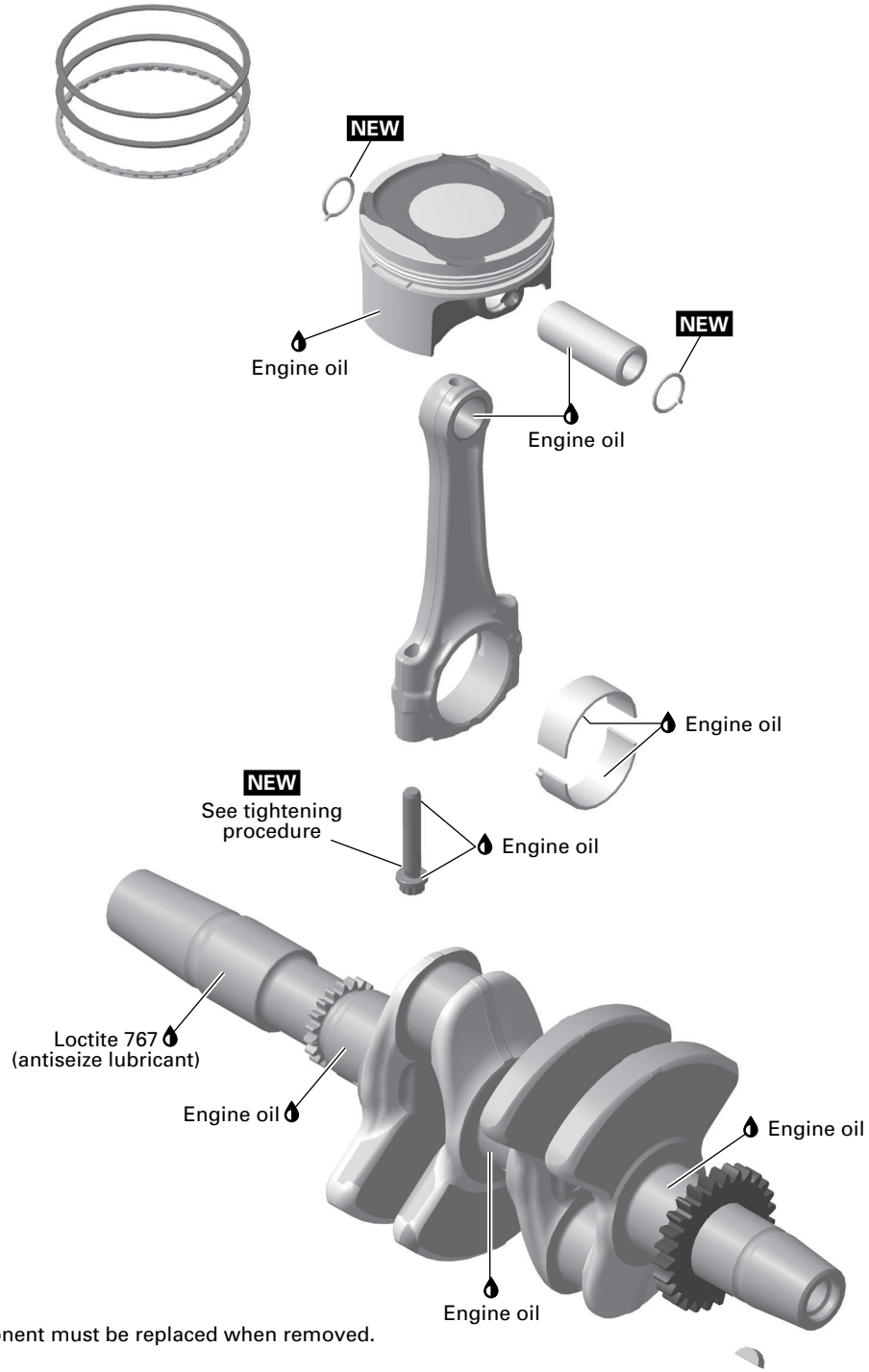


NEW = Component must be replaced when removed.

## General

When disassembling parts that are duplicated in the engine, (e.g.: pistons, connecting rods etc.), it is strongly recommended to note their position and to keep the parts of the same assembly as a “group”. If you find a defective component, it would be much easier to find the cause of the failure. Since parts were broken-in during engine operation, they will maintain their matched fit when reassembled together within their “group”.

## Troubleshooting

Always check for fault codes. If a fault code is detected, service the fault code first. Refer to *Diagnostic and Fault Codes* subsection.

### *Troubleshooting*

**1. Unusual Engine Noise or Vibrations**

Heavy wear on plain bearings.

– *Check radial play of plain bearings. Replace if out of specification.*

Crankshaft axial play out of specification.

– *Measure crankshaft axial play. If crankshaft axial play is out of specification, replace thrust washers.*

Connecting rod axial play out of specification.

– *Measure connecting rod axial play on crankshaft. Replace connecting rod or crankshaft if out of specification.*

Connecting rod screws got loose.

– *Replace damaged components and retighten screws with the recommended torque.*

Crankshaft PTO ball bearing is worn.

– *Separate crankcase and check ball bearing for excessive play. Replace ball bearing if necessary.*

### *Troubleshooting*

**1. Blue Smoke in the Exhaust**

Oil scraper rings worn out.

– *Replace piston rings.*

**2. Engine Suddenly Turns Off (Poor Idling)**

Piston rings worn out.

– *Replace piston rings.*

Piston/cylinder clearance out of specification.

– *Check piston/cylinder clearance. Replace if out of specification.*

Melted or broken piston.

– *Replace piston and cylinder block if necessary.*

## Procedures

### *PTO Oil Seal*

#### *PTO Oil Seal Access*

**NOTE:** To replace the PTO oil seal, it is not necessary to remove engine from the vehicle.

Remove drive pulley. Refer to *Drive Pulley (eDrive)* subsection.

#### *Removing the PTO Oil Seal*

1. Use pliers to remove retaining ring.

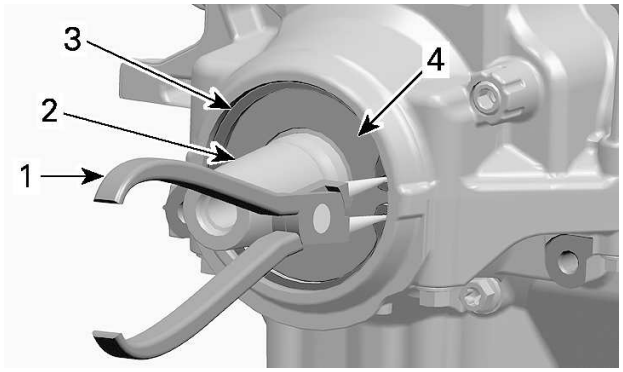


*1. Pliers*
*2. Crankshaft PTO journal*
*3. Retaining ring*
*4. Oil seal*

2. Protect crankshaft.

| | |
|---|---|
| **Crankshaft protector (PTO) (P/N 420876552)** |  |

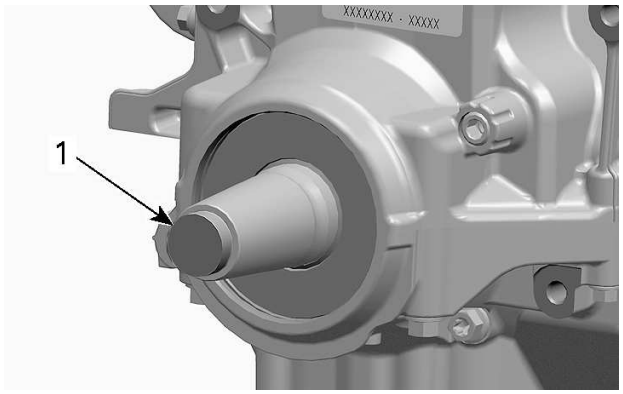


*1. Crankshaft protector*

3. Install PTO oil seal installer over the crankshaft PTO end.

| PTO oil seal installer (P/N 529036216) |  |
|---|---|

4. Carefully punch two holes in the old oil seal using a suitable pin.

**NOTE:** The holes punched in the old seal must allow the self tapping screws to bite into the seal.

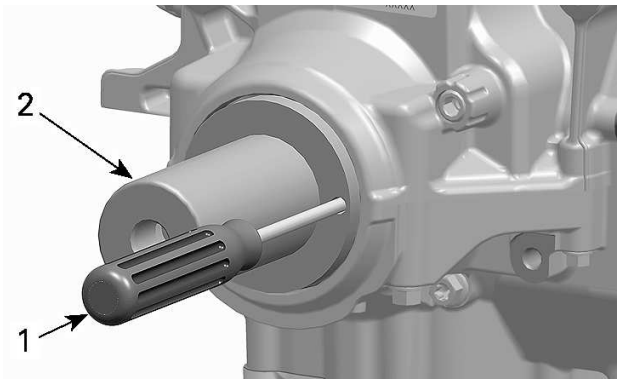


1. *Pin*
2. *Oil seal installer*

5. Thread the self tapping screws provided through the seal installer holes and into the oil seal.

**NOTICE**

**If self tapping screws other than the ones provided are used, their length must not exceed 16 mm (5/8 in).**

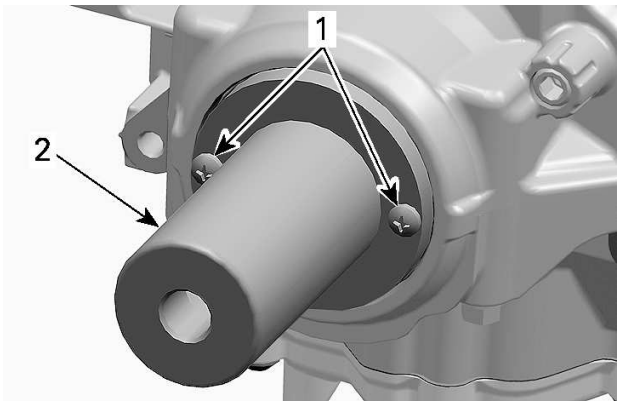


1. *Self tapping screws*
2. *Oil seal installer*

6. Thread the M16 x 1.5 x 40 mm screw provided into the seal installer, then pull the old seal off the crankcase by turning screws in.

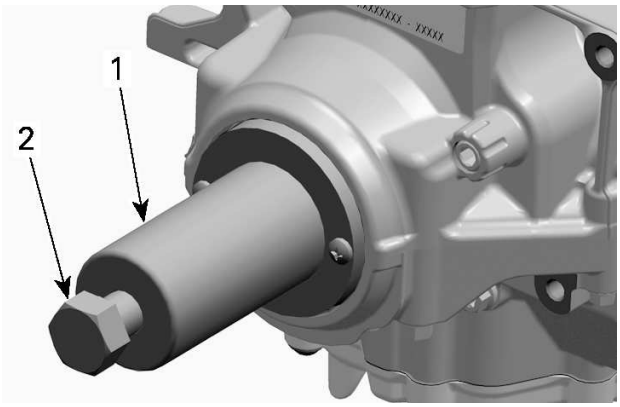


1. *Oil seal installer*
2. *M16 x 1.5 x 40 mm screw*

7. Remove crankshaft protector and clean oil seal area.

### *Installing the PTO Oil Seal*

**NOTE:** Check the oil seal running surface of crankshaft for grooves, before installation of NEW oil seal.

1. Clean crankshaft PTO side of deposits.
2. Lubricate oil seal sealing lip and outer diameter.

| Super Lube grease |
|---|

3. Place the **NEW** oil seal on crankshaft and install it.

| PTO oil seal installer (P/N 529036216) |  |
|---|---|

**NOTICE**

**Oil seal must be installed with sealing lip facing to the engine.**

1. Install PTO oil seal installer tool over the crankshaft PTO end.
2. Thread the provided M14 x 1.5 x 55 mm screw in the crankshaft.
3. Turn screw in to push the seal in place.

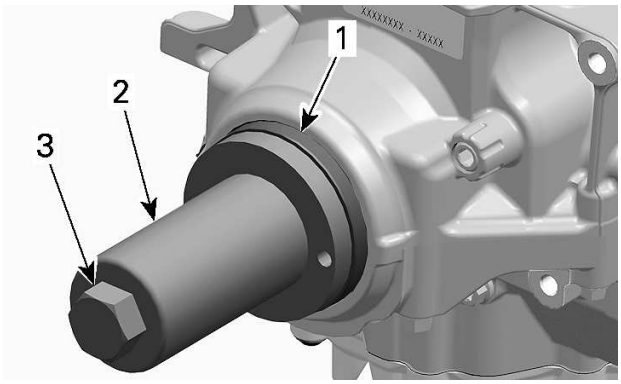


*i. Oil seal*
*ii. Oil seal installer*
*iii. M14 x 1.5 x 55 mm hex. screw*

4. Install retaining ring.

### *CYLINDER BLOCK*

#### *Disassembling the Cylinder Block*

1. Remove engine from vehicle. Refer to *Engine Removal and Installation* subsection.
2. Drain engine oil. Refer to *Lubrication System - GEN1* subsection.
3. Refer to *Ignition Coils And Spark Plugs - GEN1* subsection and remove:
   - Ignition coils
   - Spark plugs.
4. Remove valve cover. Refer to *Cylinder Head - GEN1* subsection.
5. Lock crankshaft, refer to *Crankshaft Locking Procedure* in this subsection.
6. Remove air intake manifold. Refer to *Intake Manifold - GEN1* subsection.
7. Refer to *Cooling System - Engine Components - GEN1* subsection and remove:
   - Water pump housing
   - Thermostat
   - Water pump drive gear.
8. Refer to *Lubrication System - GEN1* subsection and remove:
   - Oil tank
   - Oil cooler
   - Oil pressure regulator
   - Oil pump drive gears and oil pumps
   - Oil sump cover
   - Oil strainers.
9. Refer to *Magneto And Starter - GEN1* subsection and remove:
   - Magneto cover
   - Rotor
   - Starter drive gears
   - Electric starter.
10. Refer to *Timing Chain* subsection and remove:
    - Timing chain tensioner
    - Timing chain guides.
11. Refer to *Cylinder Head* subsection and remove:
    - Camshaft holders
    - Cylinder head.

**NOTE:** Before splitting the cylinder block, measure crankshaft axial play. Refer to *Crankshaft* in this subsection.

12. Remove crankshaft locking tool.
13. Remove cylinder block screws.

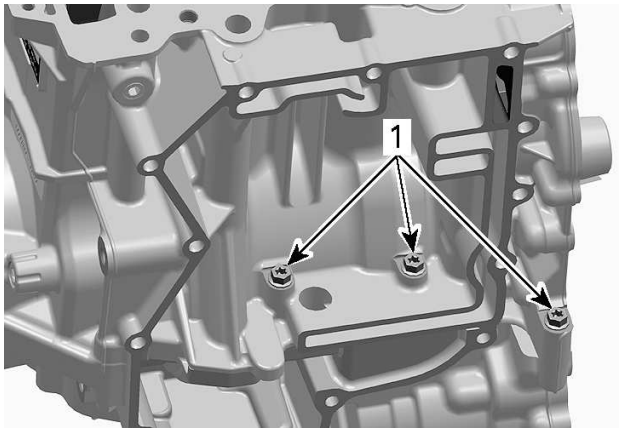


*1. Cylinder block screws (M6) screwed from top to bottom*

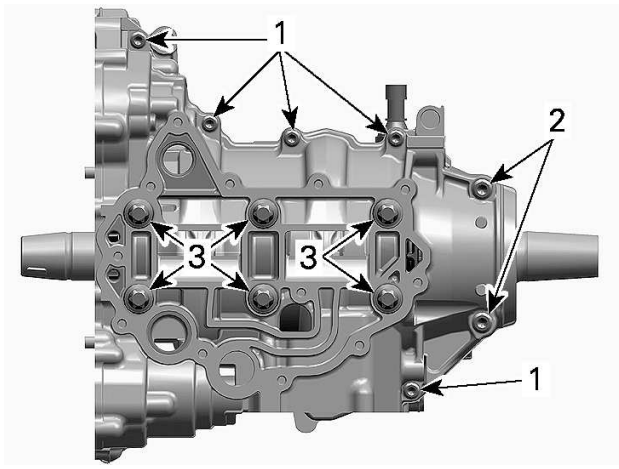


*1. M6 screws*
*2. M8 screws*
*3. M9 screws (discard)*

1. First remove the M6 screws.
2. Then remove the M8 screws.
3. Finally remove and discard the M9 screws.

14. Carefully remove cylinder block lower half by using a soft hammer.

**NOTE:** Take care not to damage the sealing surfaces of the cylinder block halves.

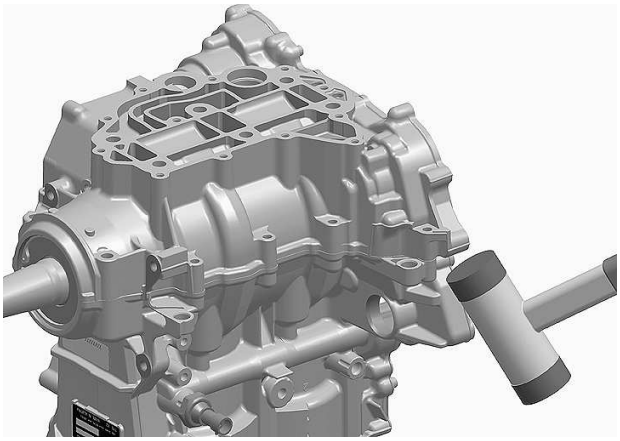

15. Remove connecting rod caps. Refer to *Pistons And Connecting Rods* in this subsection.
16. Refer to *Crankshaft* in this subsection and remove:
    - Crankshaft thrust washers
    - Crankshaft.
17. Remove pistons and connecting rods. Refer to procedure in this subsection.

### *Removing the Plain Bearing*

When the plain bearings need to be removed from the cylinder block, mark them to identify the correct position at installation. See the illustration as an example.

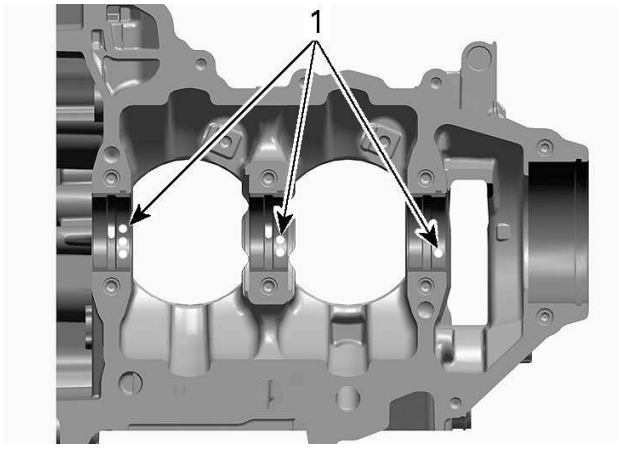


*1. Mark on crankshaft plain bearings*

### *Cleaning the Cylinder Block*

1. Clean cylinder block using a part cleaner, then use compressed air to dry it.
2. Blow out the oil orifices using compressed air and make sure they are not clogged.

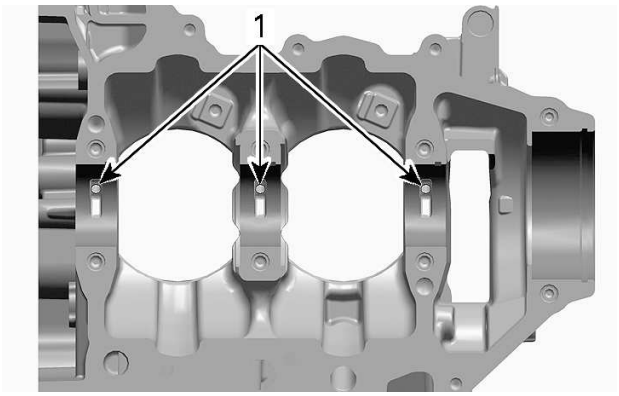


***CYLINDER BLOCK UPPER HALF***
*1. Oil orifices*

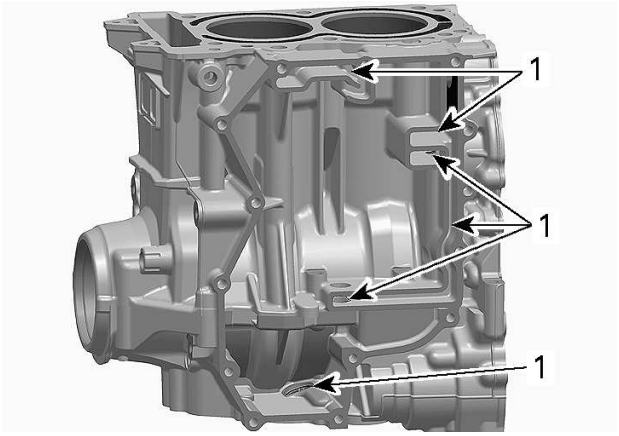


***CYLINDER BLOCK - REAR***
*1. Oil orifices*

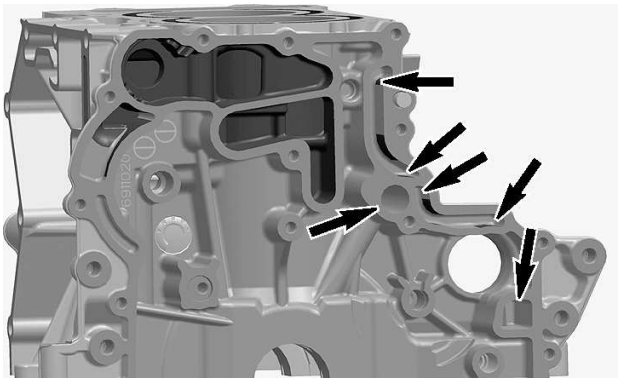

***CYLINDER BLOCK - MAG SIDE OIL ORIFICES***

T

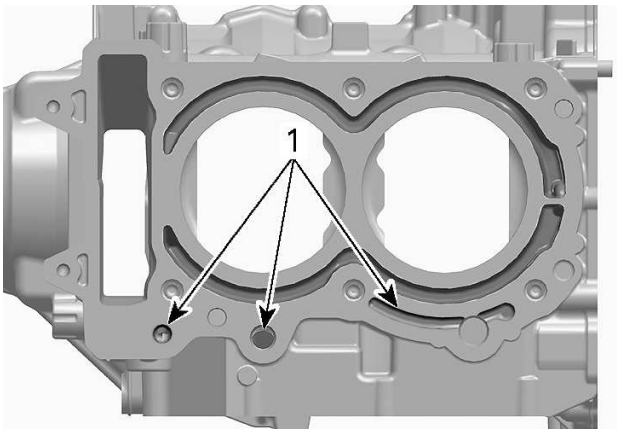


*CYLINDER BLOCK - TOP*
*1. Oil orifices*

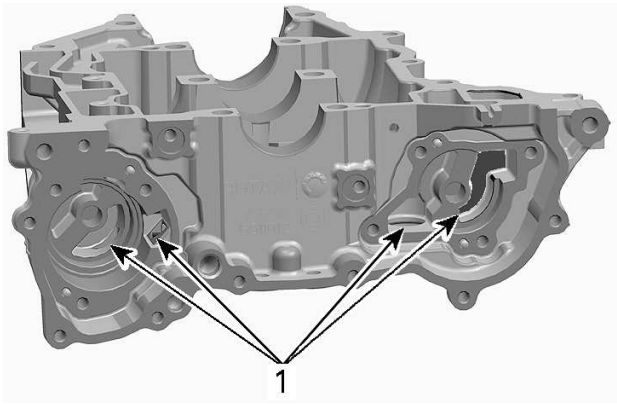


*CYLINDER BLOCK LOWER HALF*
*1. Oil orifices*

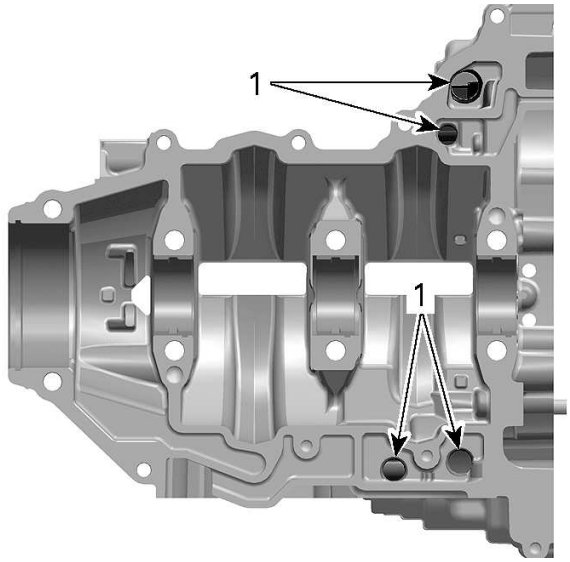


*CYLINDER BLOCK LOWER HALF*
*1. Oil orifices*

3. Clean all metal components in a solvent.
4. Clean cylinder block mating surfaces with gasket remover and a brass wire brush. Brush a first pass in one direction, then make the final brushing perpendicularly (90°) to the first pass (cross hatch).

| **Loctite chisel (gasket remover)** |
|---|

**NOTE:** Do not wipe with rags. Use a new clean hand towel only.

### *Inspecting the Cylinder Block*

1. Check cylinder block for cracks or other damage.
2. Check cylinder block mating surfaces for flatness using a straight edge.
3. Replace cylinder block if necessary.
4. Check cylinder bores for cracks, scoring and wear ridges on top and bottom of the cylinders.

### *Cylinder Taper*

Measure cylinder bore diameter at 4 recommended positions. See illustration.

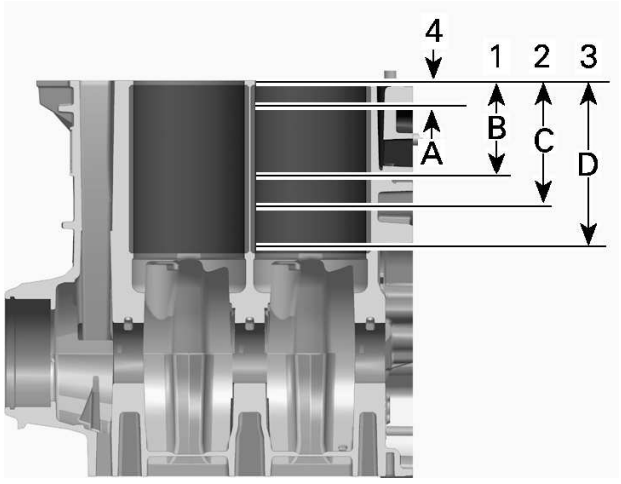


*TYPICAL*
*1. First measure*
*2. Second measure*
*3. Third measure*
*4. Fourth measure*
*A. 5 to 10 mm (.197 to .394 in)*
*B. 30 to 35 mm (1.181 to 1.378 in)*
*C. 57 to 62 mm (2.244 to 2.441 in)*
*D. 111 to 113 mm (4.37 to 4.449 in)*

The difference between measurements should not exceed the service limit mentioned in next table.

| Cylinder Taper | |
|---|---|
| New maximum | 0.030 mm (.0012 in) |
| Service limit | 0.050 mm (.002 in) |

### *Cylinder Out of Round*

Measure cylinder bore diameter as shown and at the same measuring points as for *Cylinder Taper*.

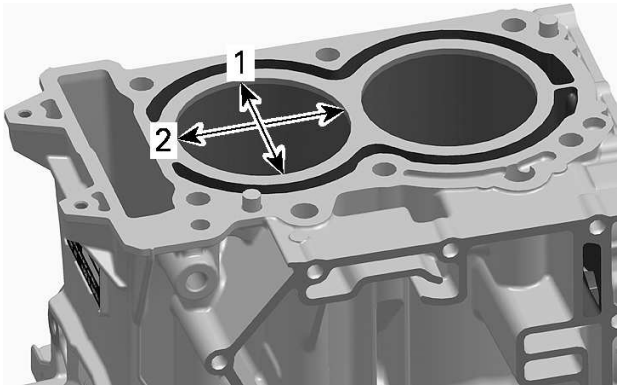


*1. Perpendicular to piston pin axis*
*2. Parallel to piston pin axis*

To obtain the cylinder out of round, calculate the difference between the perpendicular measures.

| Cylinder Out Of Round | |
|---|---|
| New maximum | 0.008 mm (.0003 in) |
| Service limit | 0.030 mm (.0012 in) |

### *Inspecting Plain Bearings Diameter*

1. Check the plain bearings for scoring or other damages.
2. Measure plain bearing inside diameter and compare with crankshaft bearing journal diameter (refer to *Crankshaft* in this subsection). Proceed as follows.
   - Use the OLD plain bearings and put both cylinder block halves together.
   - Tighten screws as described in *Assembling the Cylinder Block*.
   - Measure the inside diameter of the crankshaft plain bearings using a bore gauge.

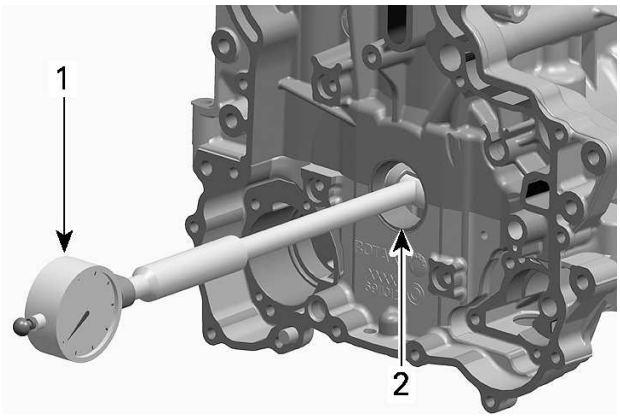


*1. Bore gauge*
*2. Crankshaft plain bearing*

| Crankshaft Plain Bearing Inside Diameter | |
|---|---|
| Service limit | 36.080 mm (1.4205 in) |

3. Replace bearings if they are out of specifications.

### *Assembling the Cylinder Block*

The assembly is the reverse of the disassembly procedure. However, pay attention to the following.

1. Correctly reinstall plain bearings as follows.
   1. Use **NEW** bearings if diameters are out of specification. Refer to *Inspecting Plain Bearing Diameter* in this subsection.
   2. Install bearings with lubrication grooves in the cylinder block upper half.

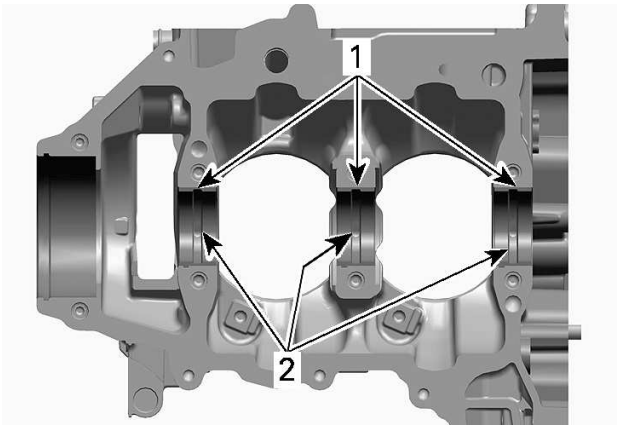


*i. Plain bearings*
*ii. Lubrication grooves*

   3. Install flat bearings in the cylinder block lower half.

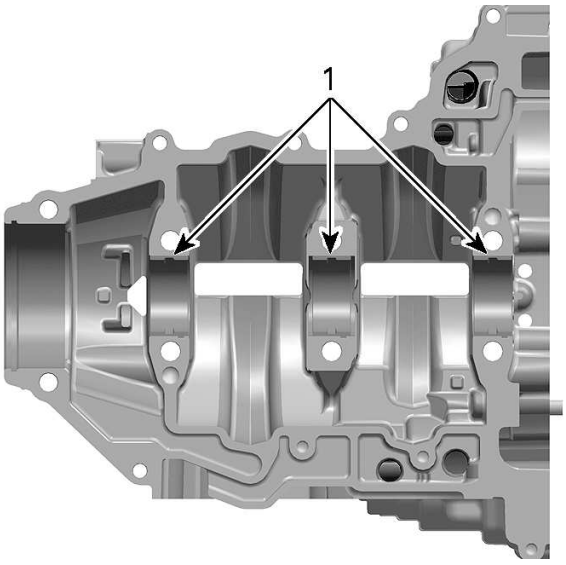


*i. Flat bearings*

**NOTICE**

**Bearings must be flush with the cylinder block split surface, and their protrusions must fit in the notched areas in the cylinder block seat.**

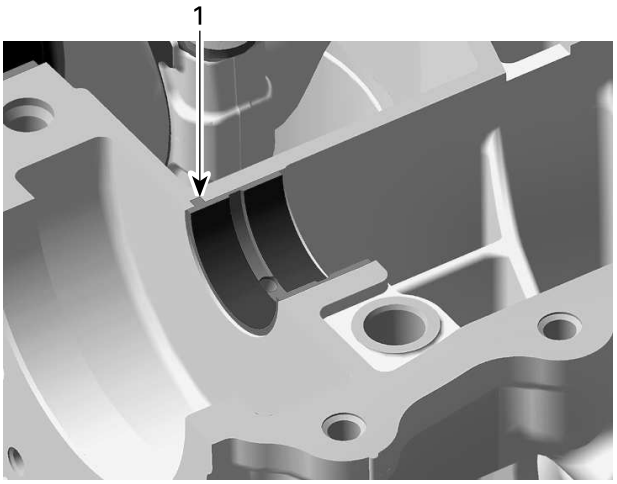


***TYPICAL***

*i. Bearing protrusion in cylinder block notch*

2. Install pistons, refer to *Pistons and Connecting Rods* in this subsection.
3. Apply engine oil on all plain bearings.
4. Install the following components:
   - Crankshaft and thrust washers (refer to *Crankshaft*)
   - Connecting rod caps (refer to *Pistons and Connecting Rods*).
5. Apply sealant on mating surface of cylinder block lower half as shown on next illustration.

**Loctite 5910**

**IMPORTANT**: When beginning the application of the cylinder block sealant, the assembly and first tightening must be done within 12 minutes. It is suggested to have all you need on hand to save time.

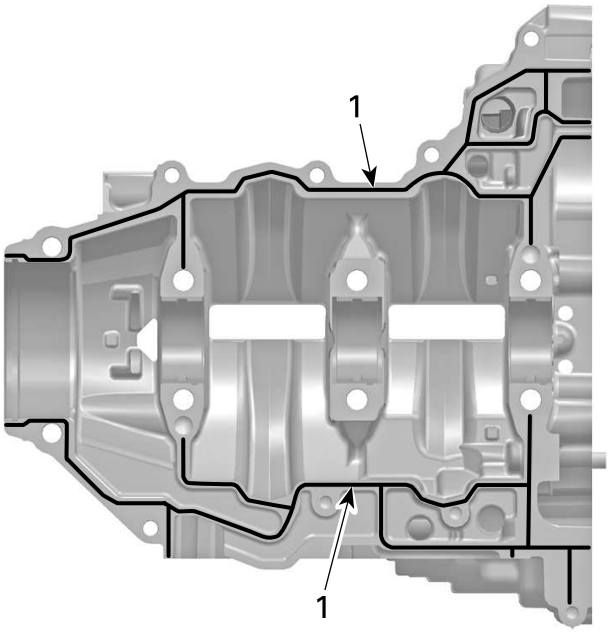


*1. Apply Loctite 5910 following this pattern*

**NOTICE**

**Ensure not to apply too much sealant, as it will spread out inside the cylinder block.**

**NOTICE**

**Take care to ensure the bypass passage of the engine oil pressure regulator is not clogged with sealant.**

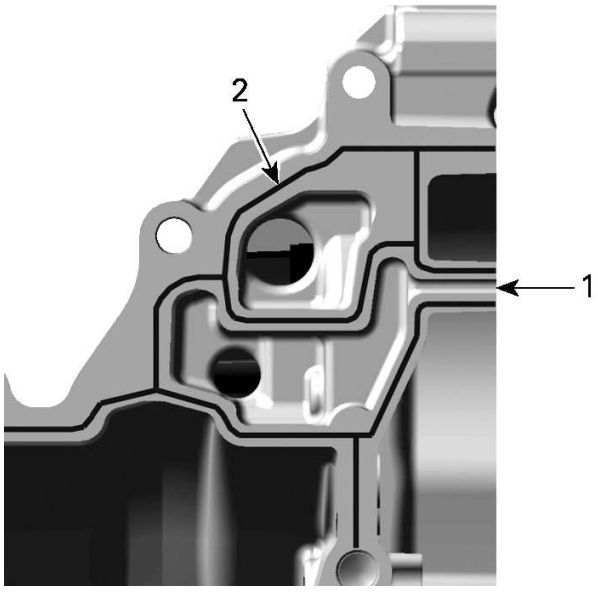


1. *Bypass passage of engine oil pressure regulator*
2. *Loctite 5910 applied*

6. Install **NEW** cylinder block M9 screws and tighten as follows.

**NOTICE**

**This assembly uses stretch screws. Always use NEW screws and strictly adhere to the tightening procedure.**

1. Torque the M9 screws according the sequence.

| Tightening Procedure | | |
|---|---|---|
| Cylinder block M9 screws | Step A | 20 ± 2 Nm (15 ± 1 lbf-ft) |

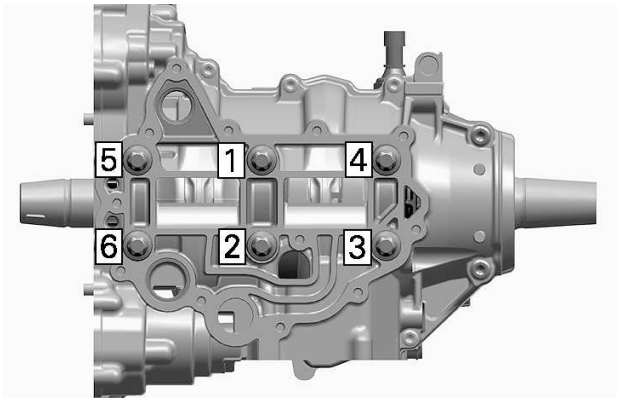


***M9 SCREWS TIGHTENING SEQUENCE - FIRST AND SECOND STEPS***

2. Use a torque angle gauge to carry out the second step, following the same sequence.

| Tightening Procedure | | |
|---|---|---|
| Cylinder block M9 screws | Step B | Additional 150° ± 5° |

7. Install M8 screws and tighten as follows.

| Tightening Torque | |
|---|---|
| Cylinder Block M8 screws | 23 ± 2 Nm (17 ± 1 lbf-ft) |

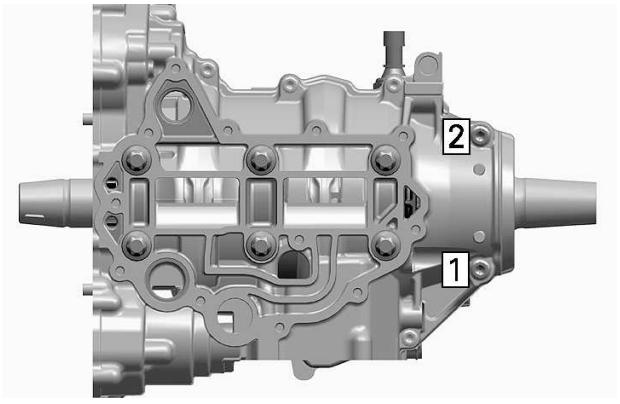


***M8 SCREWS TIGHTENING SEQUENCE***

8. Install the M6 screws and tighten as follows.

| Tightening Torque | |
|---|---|
| Cylinder block M6 screws | 9 ± 1 Nm (80 ± 9 lbf-in) |

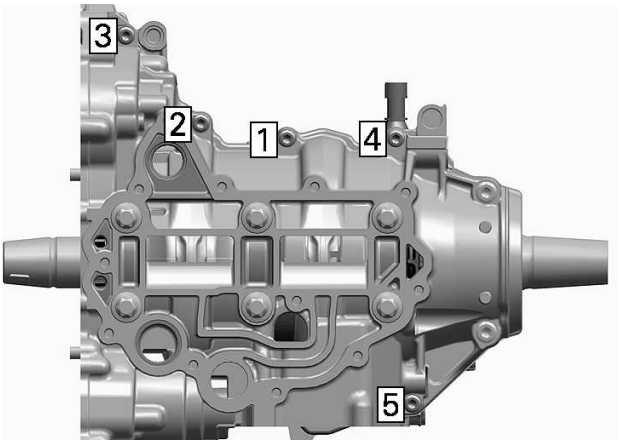


***M6 SCREWS TIGHTENING SEQUENCE (BOTTOM OF CRANKCASE)***

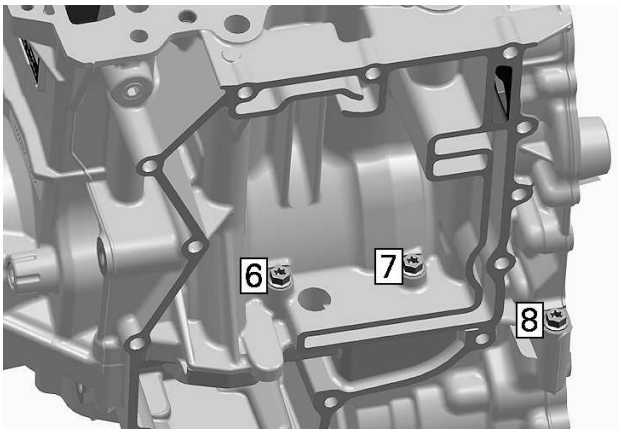


***M6 SCREWS TIGHTENING SEQUENCE (REAR OF CRANKCASE)***

**NOTE:** Check the crankshaft axial play before continuing the assembly. Refer to *Crankshaft* in this subsection.

9. Reassemble engine in accordance with the proper assembly procedures.

### *Crankshaft*

#### *Crankshaft Locking Procedure*

**NOTICE**

**When crankshaft is locked, neither first nor second cylinder is set to TDC.**

Crankshaft must be locked whenever the magneto rotor retaining nut has to be removed, or whenever working on the valve train.

**NOTICE**

**When working on the valve train or timing chain, the crankshaft must be locked with the marks "IN" and "EX" on the camshaft timing gears facing each other.**

1. If working on the valve train or timing chain, remove the valve cover. Refer to *Ccylinder Head* subsection.
2. Remove spark plugs.
3. Remove crankshaft access plug and discard gasket ring.

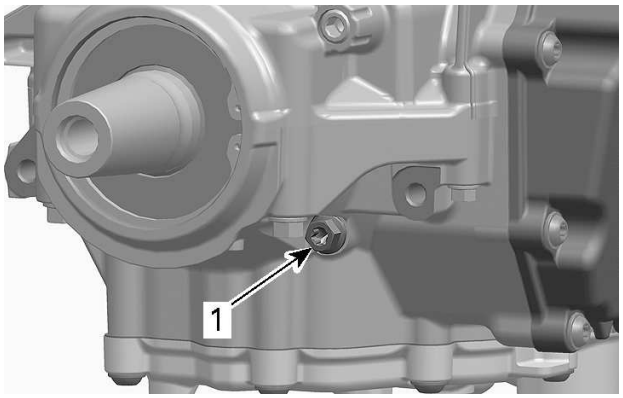


*1. Crankshaft access plug*

4. Turn engine on PTO side counterclockwise to bring crankshaft to locking position.

   For turning the crankshaft install drive pulley or use a suitable screw locked by a counter nut.

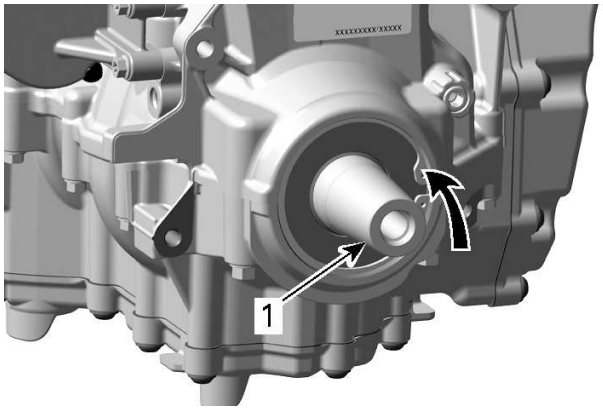


*1. Crankshaft PTO side*

**NOTICE**

**Crankshaft locking position is reached when marks "IN" and "EX" on the camshaft timing gears face each other.**

5. Use a flashlight to check if the groove in the crankshaft is aligned with the hole.
6. Lock crankshaft.

| | |
|---|---|
| **Crankshaft locking tool (P/N 529036205)** |  |

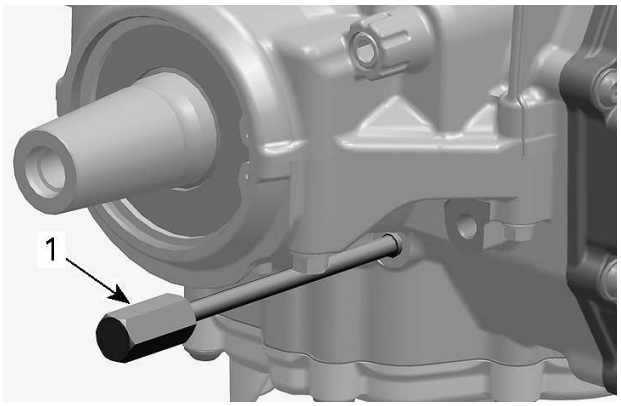


*1. Crankshaft locking tool*

### *Removing the Crankshaft*

1. Disassemble *Cylinder Block*, see procedure in this subsection.
2. Remove connecting rod caps. Refer to *Pistons and Connecting Rods* in this subsection.
3. Remove crankshaft thrust washers.

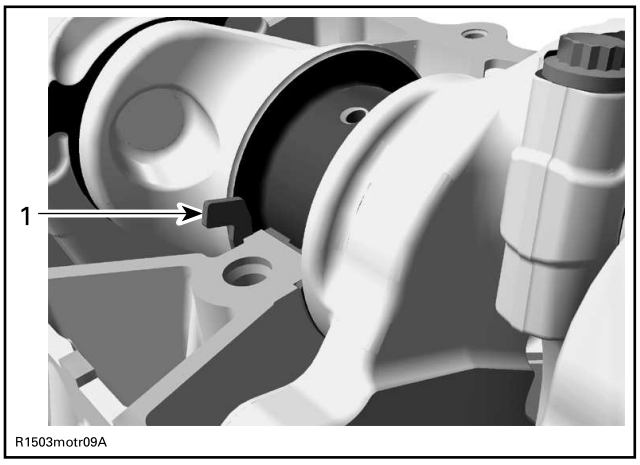


***TYPICAL***
*1. Thrust washer*

4. Remove crankshaft from cylinder block.

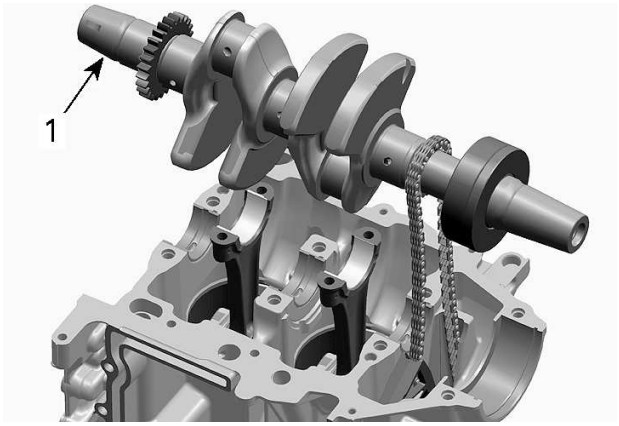


*1. Crankshaft*

### *Inspecting the Crankshaft*

1. Check each bearing journal of crankshaft for scoring, scuffing, cracks or other signs of wear.
2. Check if crankshaft gears are worn or otherwise damage.

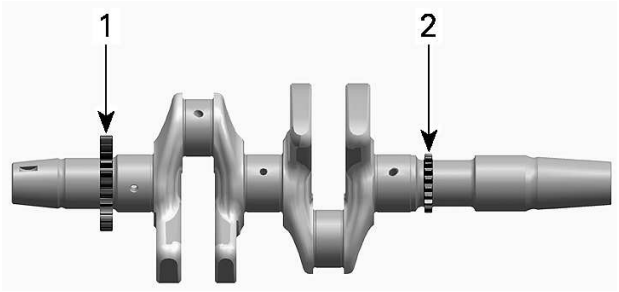


*1. Oil pump drive gear*
*2. Crankshaft timing gear*

3. Replace crankshaft if damaged.
4. Blow the oil orifices using compressed air and make sure they are not clogged.

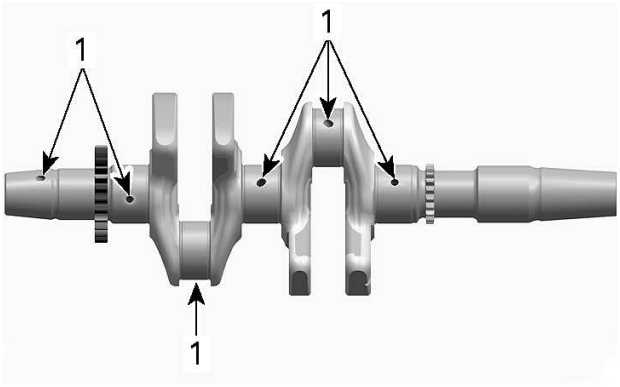


*1. Check oil orifices*

### *Crankshaft Radial Play*

1. Measure crankshaft bearing journal diameter using a micrometer.

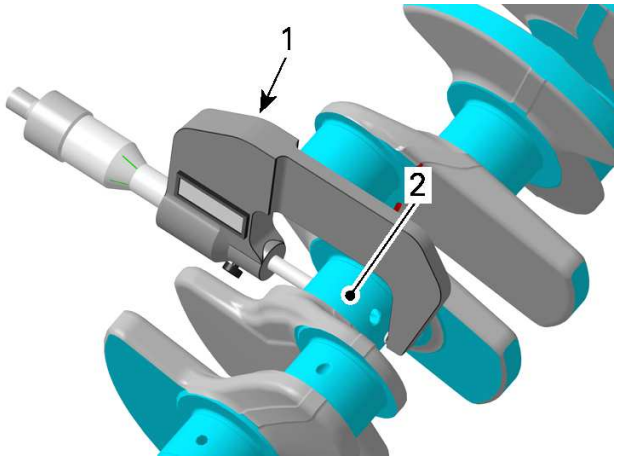


***TYPICAL***
*1. Micrometer*
*2. Crankshaft area for plain bearing*

2. To obtain the radial play, calculate the difference between the bearing journal diameter and the crankshaft plain bearings inner diameter (see *Cylinder Block* in this subsection).

| Crankshaft Bearing Journal Diameter | |
|---|---|
| New | 35.990 to 36.006 mm (1.4169 to 1.4176 in) |
| Service limit | 35.960 mm (1.4157 in) |

| Crankshaft Radial Play | |
|---|---|
| Service limit | 0.080 mm (.0031 in) |

### *Crankshaft Pin Diameter*

1. Measure crankshaft pin diameter using a micrometer.
2. To obtain the radial play, calculate the difference between the crankshaft pin diameter and the inner diameter of the connecting rod plain bearings (see *Inspecting the Connecting Rod* in this subsection).

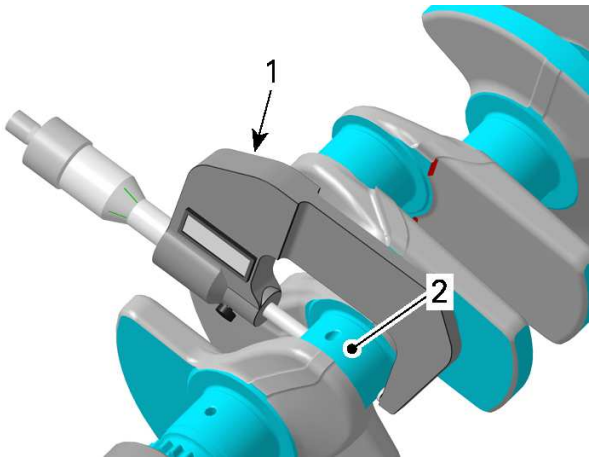


***TYPICAL***
*1. Micrometer*
*2. Crankshaft pin area for plain bearing*

| Crankshaft Pin Diameter | |
|---|---|
| New | 35.979 to 35.995 mm (1.416 to 1.417 in) |
| Service limit | 35.969 mm (1.416 in) |

| Connecting Rod Big End Radial Play | |
|---|---|
| Service limit | 0.080 mm (.0031 in) |

### *Crankshaft Axial Play*

1. With the crankshaft in the cylinder block, measure the crankshaft axial play, using a dial indicator.

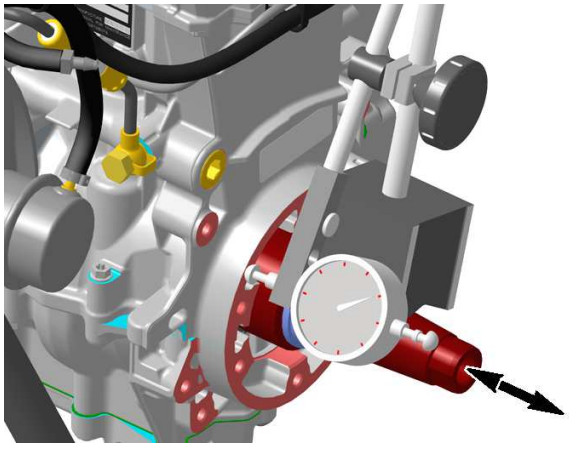

***TYPICAL***

| Crankshaft Axial Play | |
|---|---|
| New | 0.120 to 0.392 mm (.005 to .015 in) |
| Service limit | 0.450 mm (.018 in) |

2. If axial play is out of specification, replace the crankshaft thrust washers and repeat measurement.

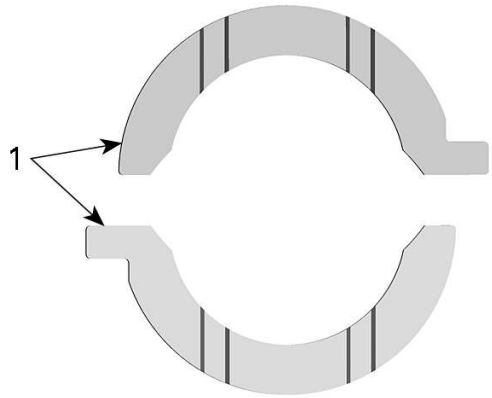


***TYPICAL***
*1. Crankshaft thrust washers*

### *Installing the Crankshaft*

The installation is the reverse of the removal procedure. However, pay attention to following.

1. Turn cylinder block upside down.

**NOTICE**

**Be careful that connecting rods do not hit the cylinder block.**

2. Apply engine oil on all plain bearings before installing them.
3. Install crankshaft along with the timing chain.
4. Lubricate (both sides) and reinstall crankshaft thrust washers with the slots facing against crankshaft counterweights.

**NOTE:** Thrust washers have to be flush with cylinder block sealing surface.

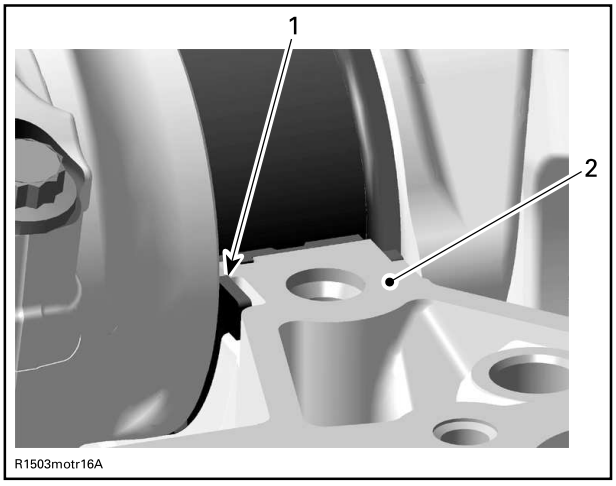


***TYPICAL***
*1. Thrust washer*
*2. Sealing surface*

5. Install connecting rod caps. Refer to *Pistons and Connecting Rods* in this subsection.

**NOTICE**

**It is absolutely necessary to follow this procedure. Otherwise severe engine damage can occur.**

6. Install cylinder block lower half. Refer to *Cylinder Block* in this subsection.
7. Lock crankshaft before further assembly of the engine. See *Crankshaft Locking Procedure* in this subsection.

### *Pistons And Connecting Rods*

#### *Removing the Piston and Connecting Rod*

**NOTE:** It is recommended to measure connecting rod big end axial play prior to remove connecting rod. Refer to *Inspecting the Connecting Rod* in this subsection.

1. Disassemble *Cylinder Block* as per procedure in this subsection.
2. Remove connecting rod cap.

**NOTICE**

**Mark cylinder position of connecting rod before disassembly.**

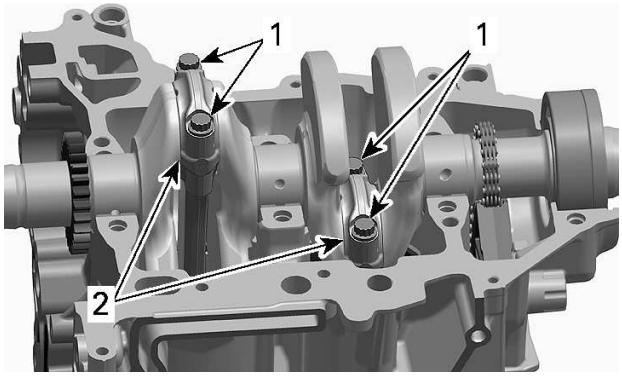


*1. Connecting rod screws*
*2. Connecting rod cap*

3. Remove *Crankshaft* as per procedure in this subsection.
4. Turn cylinder block and push piston and connecting rod out of the cylinder.

#### *Disassembling the Piston and Connecting Rod*

1. Remove one piston pin circlip and discard it.

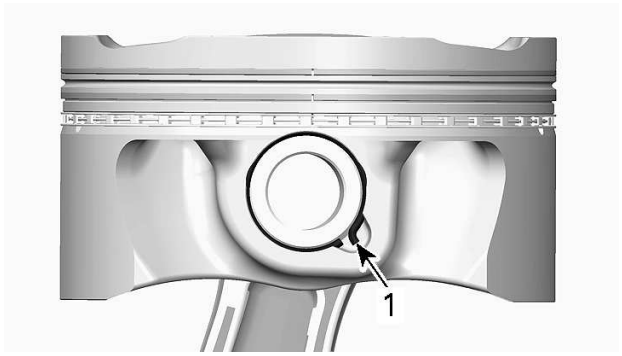


***TYPICAL***
*1. Piston pin circlip*

**NOTE:** The removal of both piston pin circlips is not necessary to remove the piston pin.

2. Push piston pin out of the piston.

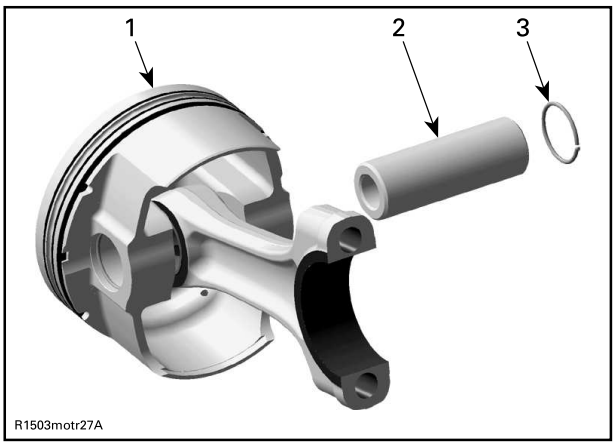


*TYPICAL*
1. *Piston*
2. *Piston pin*
3. *Circlip*

3. Detach piston from connecting rod.

### *Inspecting the Connecting Rod*

### *Connecting Rod Big End Axial Play*

Using a feeler gauge, measure distance between butting face of the connecting rod and the crankshaft counterweight. If the distance exceeds specified tolerance, replace the worn part.

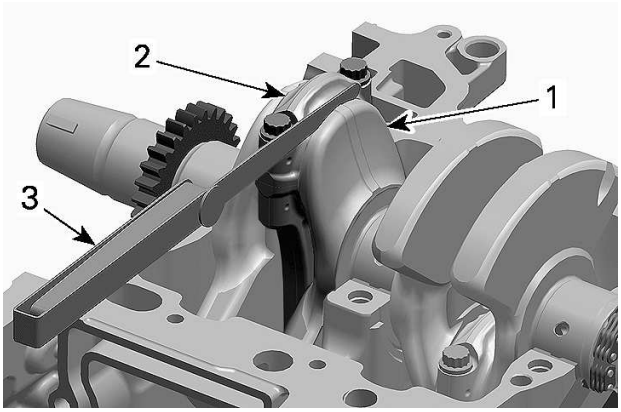


1. *Crankshaft*
2. *Connecting rod*
3. *Feeler gauge*

| Connecting Rod Big End Axial Play | |
|---|---|
| New | 0.100 to 0.352 mm (.004 to .014 in) |
| Service limit | 0.450 mm (.018 in) |

### *Connecting Rod Small End Radial Play*

1. Measure connecting rod small end using a bore gauge.

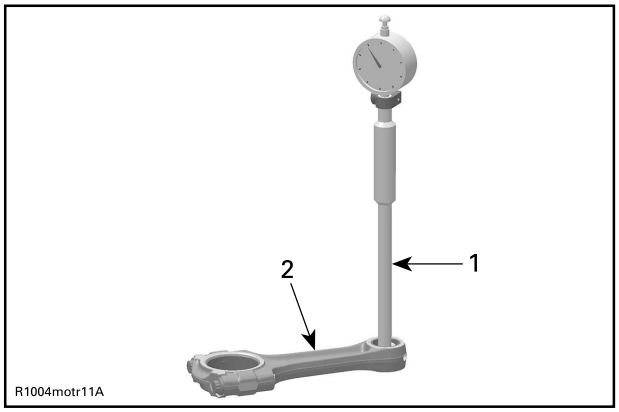


*TYPICAL*
1. *Bore gauge*
2. *Connecting rod*

| Connecting Rod Small End Diameter | |
|---|---|
| New | 17.010 to 17.020 mm (.6697 to .6701 in) |
| Service limit | 17.060 mm (.6717 in) |

2. If the connecting rod small end diameter is out of specification, replace the connecting rod.
3. To obtain the radial play, calculate the difference between the piston pin diameter (*Inspecting the Piston Pin*) and the connecting rod small end inner diameter.

| Connecting Rod Small End Radial Play | |
|---|---|
| Service limit | 0.040 mm (.0016 in) |

### *Connecting Rod Big End Radial Play*

1. Measure inside diameter of connecting rod big end.

| Connecting Rod Big End Diameter | |
|---|---|
| Service limit | 36.060 mm (1.4197 in) |

To obtain the connecting rod big end radial play, calculate the difference between the big end diameter and the crankshaft pin diameter (see *Inspecting the Crankshaft*) in this subsection.

| Connecting Rod Big End Radial Play | |
|---|---|
| Service limit | 0.080 mm (.0031 in) |

If connecting rod big end diameter is out of specification, install NEW plain bearings.

1. Install the OLD plain bearings as they were mounted initially.
2. Perform the tightening procedure as described in *Installing Piston and Connecting Rod* in this subsection.

**NOTE:** To measure the connecting rod big end diameter, ALWAYS use the OLD connecting rod screws.

3. Measure inside diameter in longitudinal direction of the connecting rod.

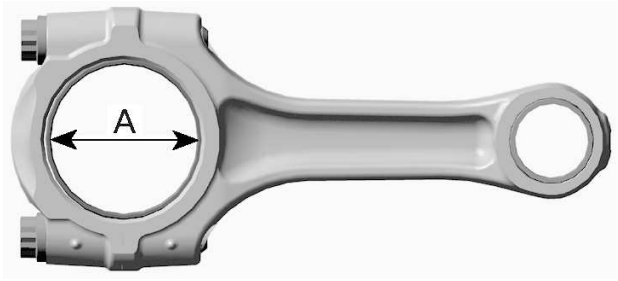


***TYPICAL***

*i. Connecting rod big end bearing*

### *Inspecting the Piston Pin*

1. Using synthetic abrasive woven, clean piston pin from deposits.
2. Inspect piston pin for scoring, cracks or other damage.
3. Measure piston pin diameter, using a micrometer. See the following illustration for the proper measurement position.

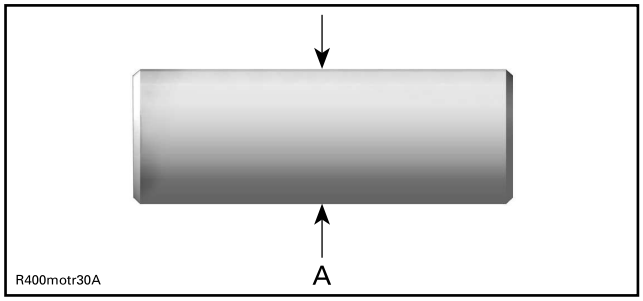


***TYPICAL***

*A. Measure piston pin diameter here*

| Piston Pin Diameter | |
|---|---|
| New | 16.996 to 17.000 mm (.6691 to .6693 in) |
| Service limit | 16.986 mm (.6687 in) |

4. Replace piston pin if out of specification.

### *Inspecting the Piston*

1. Inspect piston for scoring, scuffing, cracks or other damage. Replace piston and piston rings if necessary.
2. Using a micrometer, measure piston perpendicularly (90°) to piston pin axis at 8.5 mm (11/32 in) from the skirt edge.

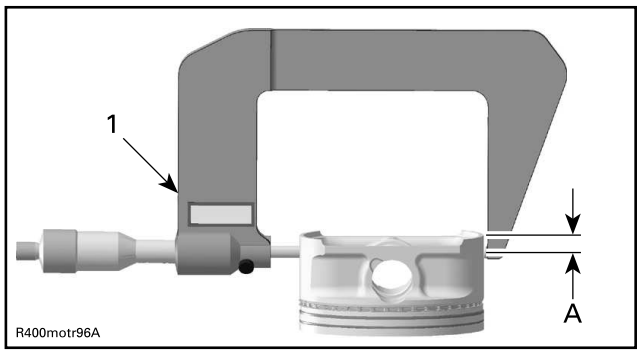


***TYPICAL***

*1. Measuring perpendicularly (90°) to piston pin axis*

*A. 8.5 mm (11/32 in)*

| Piston Measurement | |
|---|---|
| New | 73.950 to 73.966 mm (2.911 to 2.912 in) |
| Service limit | 73.920 mm (2.9102 in) |

3. Replace piston if out of specification.

### *Piston/Cylinder Clearance*

1. Adjust and lock a micrometer to the piston dimension.

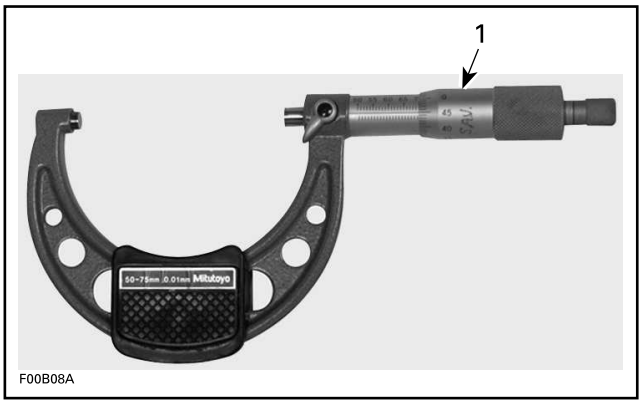


***TYPICAL***

*1. Micrometer set to the piston dimension*

**NOTE:** Make sure used piston is not worn.

2. With the micrometer locked at step 1, adjust a cylinder bore gauge to the micrometer dimension and set the indicator to 0 (zero).

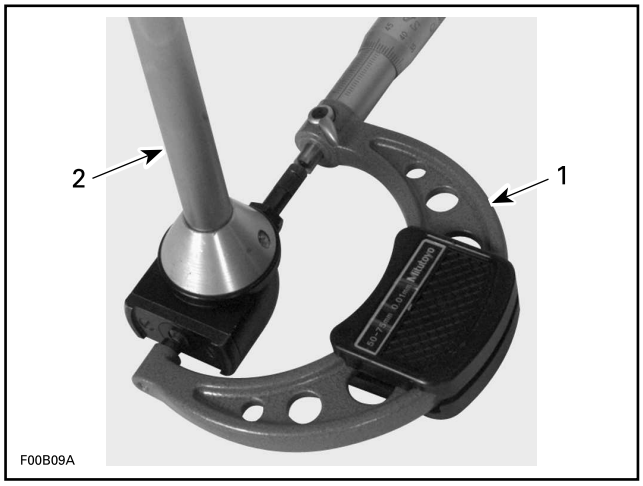


***TYPICAL***
1. *Use the micrometer to set the cylinder bore gauge*
2. *Cylinder bore gauge*

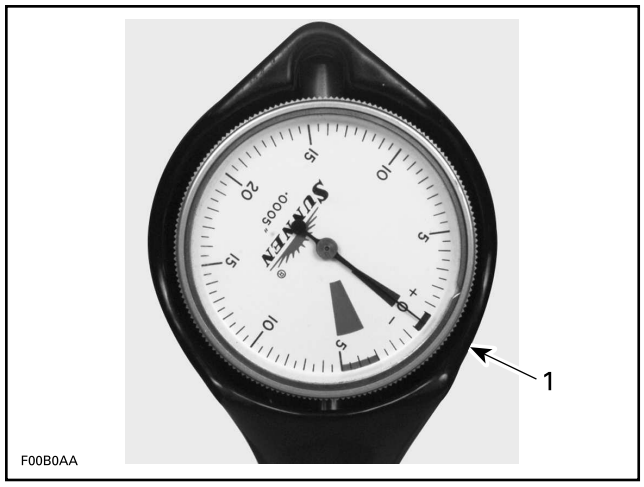


***TYPICAL***
1. *Indicator set to 0 (zero)*

**NOTE:** Make sure the cylinder bore gauge indicator is set exactly at the same position as with the micrometer, otherwise the reading will be false.

3. Position the cylinder bore gauge 35 mm (1-3/8 in) below the cylinder head mating surface, measuring perpendicularly (90°) to piston pin axis.
4. Read measurement on cylinder bore gauge. The result is the exact piston/cylinder clearance.

| Piston/Cylinder Clearance | |
|---|---|
| New | 0.037 to 0.067 mm (.0015 to .0026 in) |
| Service limit | 0.080 mm (.0031 in) |

5. If clearance exceeds specified tolerance, replace piston and repeat measurement procedure.

### *Assembling the Piston and Connecting Rod*

The assembly is the reverse of the disassembly procedure. However, pay attention to the following.

1. Apply engine oil on piston pin.
2. Insert piston pin into piston and connecting rod.

**NOTE:** Ensure to reinstall all parts in their original position as marked during removal.

3. Install **NEW** piston pin circlip(s).

| | |
|---|---|
| **Piston circlip installer (P/N 529036207)** |  |

**NOTICE**

**Always replace removed piston pin circlips by NEW ones.**

**NOTICE**

**If piston pin circlip installation fails, repeat step 3 by using a NEW circlip.**

1. Place the circlip in the sleeve and push piston circlip installer handle until circlip reaches the mid position in the sleeve.

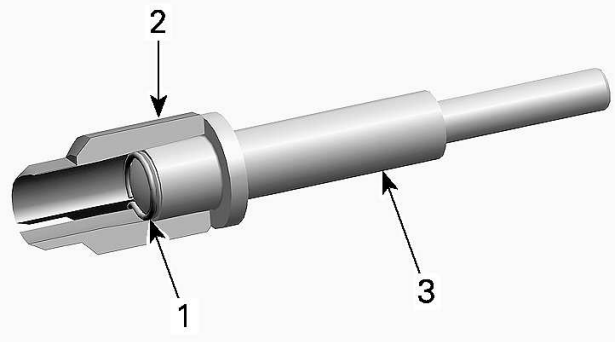


***TYPICAL***
*i. Circlip*
*ii. Sleeve*
*iii. Installer handle*

2. Put the distance sleeve on the installer handle.
3. Push piston circlip installer handle until distance sleeve makes contact with the sleeve.

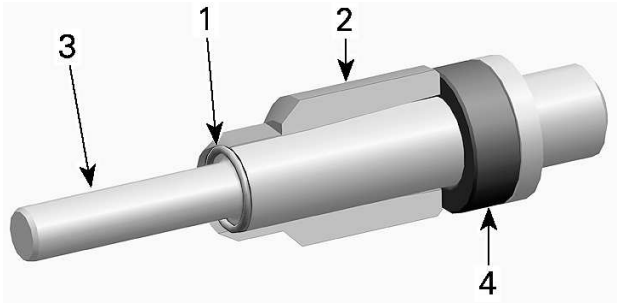


*i. Circlip*
*ii. Sleeve*
*iii. Installer handle*
*iv. Distance sleeve*

4. Remove distance sleeve and insert installer handle into the sleeve.
5. Insert the end of the handle into the piston pin, then push to engage the circlip into the piston groove.

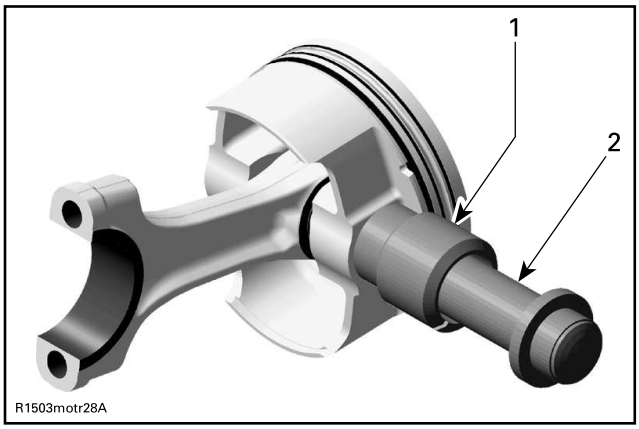


***TYPICAL***

*i. Sleeve with piston circlip inside*
*ii. Piston clip installer handle*

**NOTE:** Ensure the hook of the piston pin circlip is properly positioned.

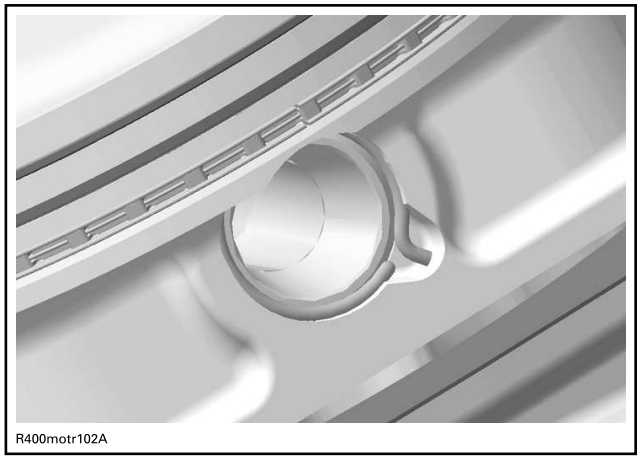


***CORRECT POSITION OF PISTON PIN CIRCLIP***

4. Correctly install plain bearings and carefully clean split surface on both sides (cracked area) with compressed air.

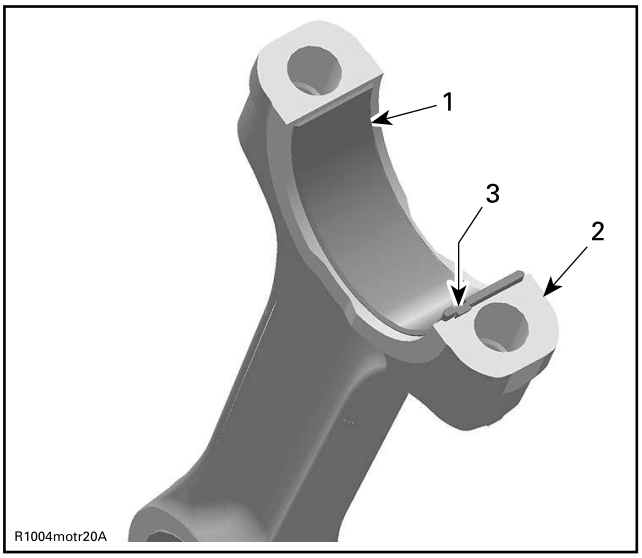


***TYPICAL***

*1. Half bearing of connecting rod big end*
*2. Split surface of the connecting rod*
*3. Protrusion of bearing in line with connecting rod groove*

**NOTICE**

**The arrow on top of the piston and the punched marks on the connecting rods must always point towards exhaust.**

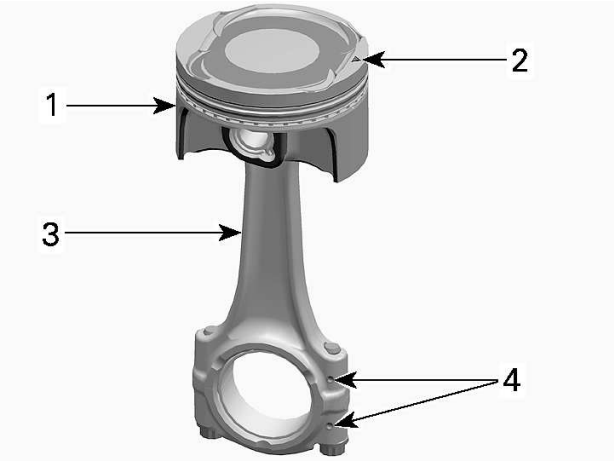


1. *Piston*
2. *Arrow on top*
3. *Connecting rod*
4. *Punch marks*

### *Installing the Piston and Connecting Rod*

1. Use engine oil and lubricate:
   - Piston
   - Piston rings
   - Cylinder bore
   - Connecting rod bearings.
2. Slide piston into cylinder bore. Pay attention to the following:

| | |
|---|---|
| **Piston ring compressor (P/N 529036208)** |  |



***TYPICAL***

**NOTICE**

**Piston installed with the arrow in the wrong direction would cause serious engine damage.**

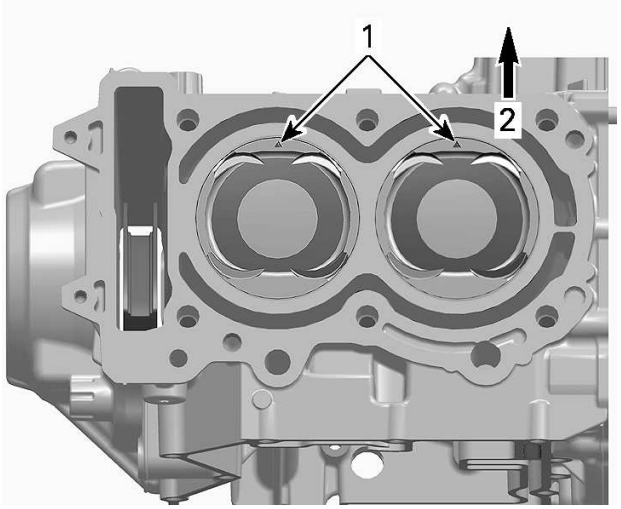


1. *Arrows*
2. *Exhaust*

1. If reused, install piston in its original bore.
2. Make sure piston rings are properly spaced.

**NOTICE**

**The ring gaps of both compression rings should always be 180° from each other and 90° from the arrow on top of the piston.**

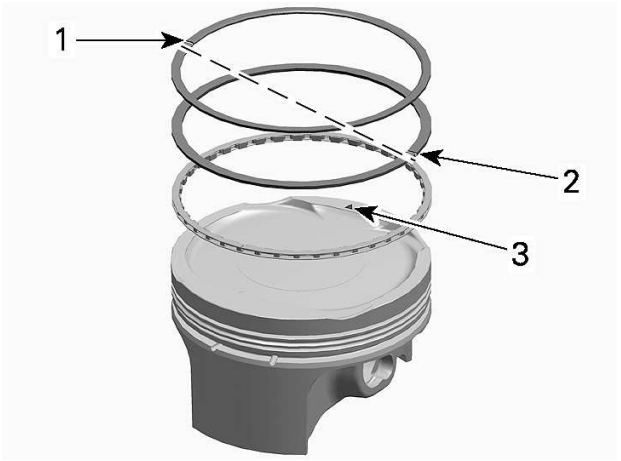


***RING GAPS AT 180° FROM EACH OTHER AND 90° FORM ARROW***

*i. Rectangular ring - ring gap*
*ii. Taper-face ring - ring gap*
*iii. Arrow*

3. The arrow on top of the piston must point towards exhaust.
3. Turn cylinder block upside down.
4. Install *Crankshaft* as per procedure in this subsection.
5. Oil crankshaft pin.
6. Install connecting rod caps.

**NOTE:** Printed marks on connecting rod and cap must point together.

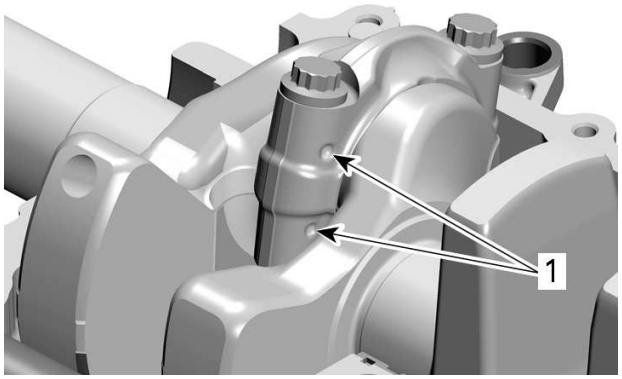


***TYPICAL***
*1. Printed marks*

**NOTICE**

**This assembly uses stretch screws. Always use NEW screws and strictly adhere to the tightening procedure.**

7. Tighten connecting rod screws as follows:

**NOTICE**

**Failure to strictly follow this procedure may cause screws to loosen and lead to severe engine damage.**

1. Apply oil on connecting rod screw heads.
2. Torque both connecting rod screws of a connecting rod.

| Tightening Procedure | | |
|---|---|---|
| Connecting Rod Screws | Step A | 12 ± 2 Nm (106 ± 18 lbf-in) |

3. Use a torque angle gauge to carry out the second step.

| Tightening Procedure | | |
|---|---|---|
| Connecting Rod Screws | Step B | Additional 70° ± 5° |

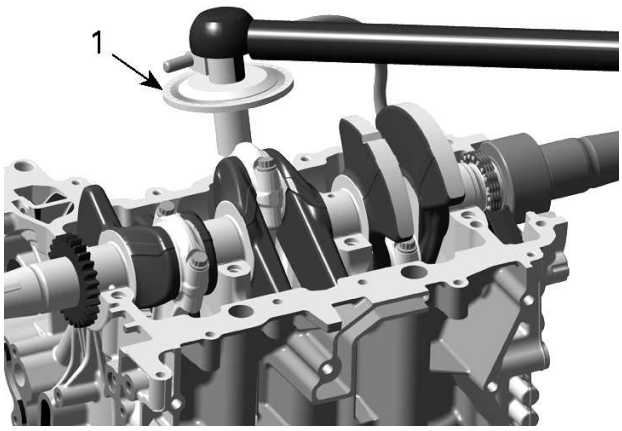


***TYPICAL***
*i. Torque angle gauge*

8. Install all other removed parts.

### *Piston Rings*

#### *Removing the Piston Rings*

1. Remove piston, see procedure in this subsection.
2. Remove rings from piston.

#### *Inspecting the Piston Rings*

#### *Ring/Piston Groove Clearance*

1. Using a feeler gauge measure each ring/piston groove clearance.

| | |
|---|---|
| **Feeler gauge** |  |

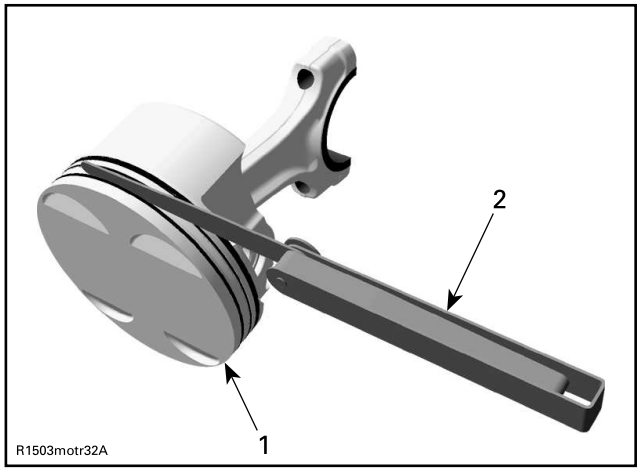


***TYPICAL***
*1. Piston*
*2. Feeler gauge*

| Ring/Piston Groove Clearance | |
|---|---|
| Upper Compression Ring | |
| New | 0.030 to 0.066 mm (.0012 to .0026 in) |
| Service limit | 0.120 mm (.0047 in) |
| Lower Compression Ring | |
| New | 0.020 to 0.056 mm (.0008 to .0022 in) |
| Service limit | 0.120 mm (.0047 in) |
| Oil Scraper Ring | |
| New | 0.010 to 0.040 mm (.0004 to .0016 in) |
| Service limit | 0.150 mm (.0059 in) |

2. If clearance is out of specification, the piston and rings should be replaced.

### *Ring End Gap*

1. Place piston ring in cylinder bore between 8 to 16 mm (5/16 to 5/8 in) from the top of cylinder.

**NOTE:** In order to correctly position the ring in the cylinder bore, use a piston as a pusher.

2. Using a feeler gauge, check ring end gap.

| **Feeler gauge** |  |
|---|---|

| Ring End Gap | |
|---|---|
| Upper Compression Ring | |
| New | 0.20 to 0.35 mm (.008 to .014 in) |
| Service limit | 1.20 mm (.047 in) |
| Lower Compression Ring | |
| New | 0.30 to 0.50 mm (.012 to .02 in) |
| Service limit | 1.20 mm (.047 in) |
| Oil Scraper Ring | |
| New | 0.20 to 0.70 mm (.0079 to .0276 in) |
| Service limit | 1.20 mm (.047 in) |

3. If ring end gap is out of specification, replace piston rings.

### *Installing the Piston Rings*

1. Install piston rings in the following order.

**NOTE:** Use a ring expander to prevent breakage during installation. The oil ring must be installed by hand.

1. Install oil scraper ring.
2. Install the lower compression ring with the letter “N” facing up.
3. Install upper compression ring with the letter “N” facing up.

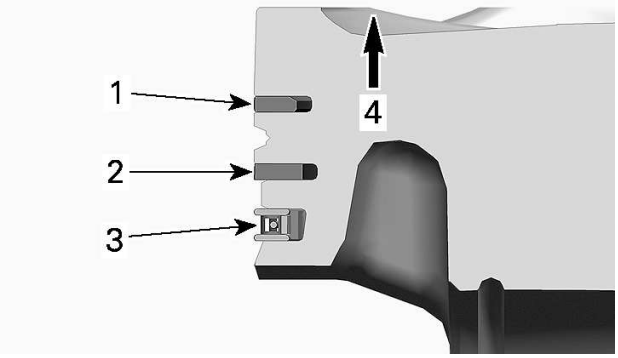


*i. Rectangular ring*
*ii. Taper-face ring*
*iii. Oil scraper ring*
*iv. Letter “N” facing up*

**NOTICE**

**Ensure the upper and lower compression rings are not interchanged.**

2. Ensure rings rotate smoothly after installation.

# Cylinder Block - 900 ACE - GEN1



## SERVICE TOOLS


| Description | Part Number | Page |
|---|---|---|
| CRANKSHAFT LOCKING TOOL | (P/N 529036272) | 260 |
| ECM ADAPTER TOOL | (P/N 529036166) | 249 |
| OIL SEAL/BEARING PUSHER | (P/N 529036284) | 252 |
| PISTON CIRCLIP INSTALLER(900 ACE) | (P/N 529036207) | 267 |
| PISTON RING COMPRESSOR | (P/N 529036208) | 269 |


## SERVICE PRODUCTS

Midwest Manuals
Green Manuals
Paperless Manuals
For a Better Tomorrow
www.green-manuals.com
If you bought this manual from any other seller please leave them
NEGATIVE feedback and notify us at bestshopmanuals@gmail.com


| Description | Part Number | Page |
|---|---|---|
| LOCTITE 243 (BLUE) | | 250, 253 |
| LOCTITE 5910 | | 258 |
| LOCTITE CHISEL (GASKET REMOVER) | | 256 |
| SUPER LUBE GREASE | | 252 |

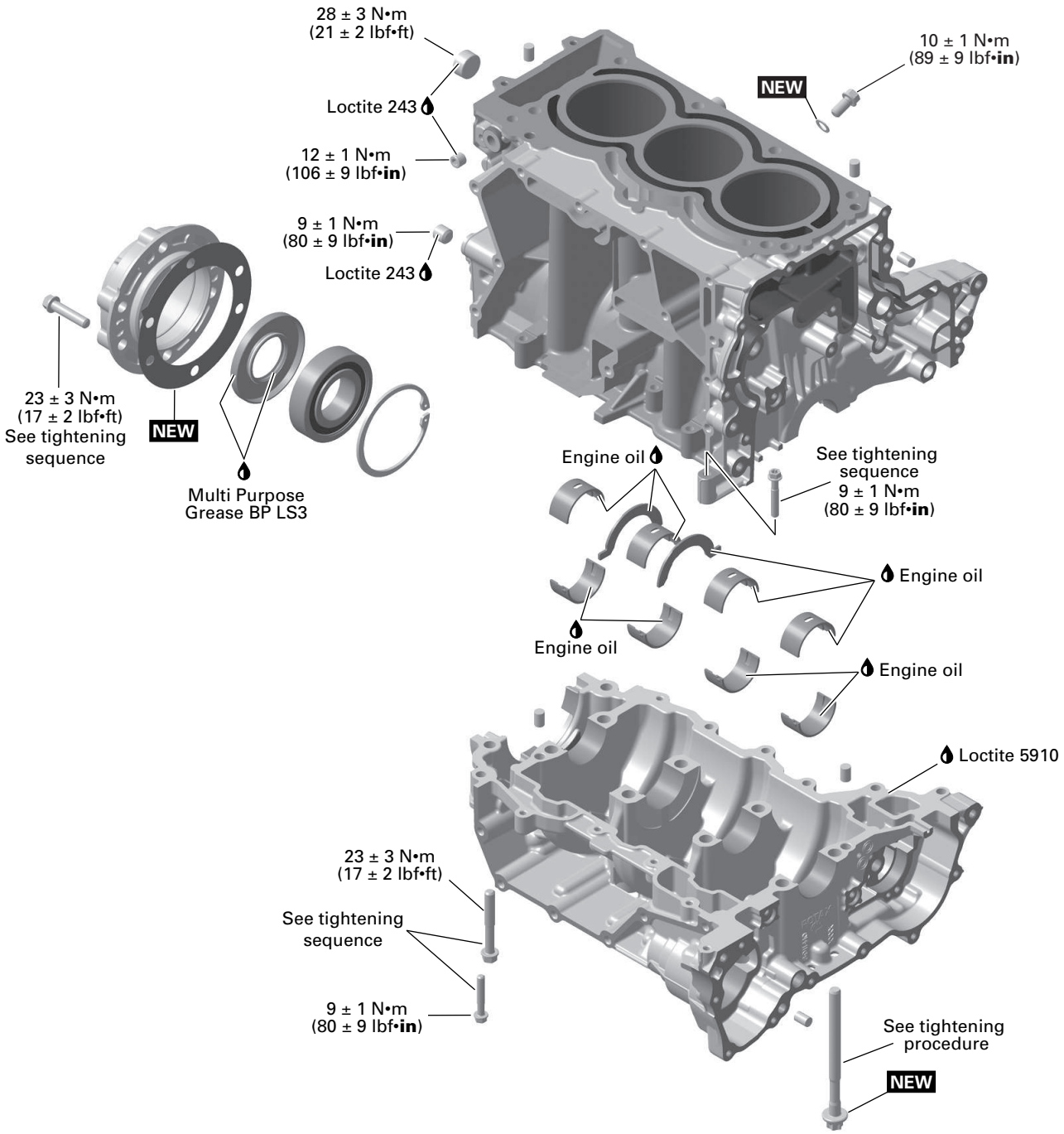


**NEW** = Component must be replaced when removed.

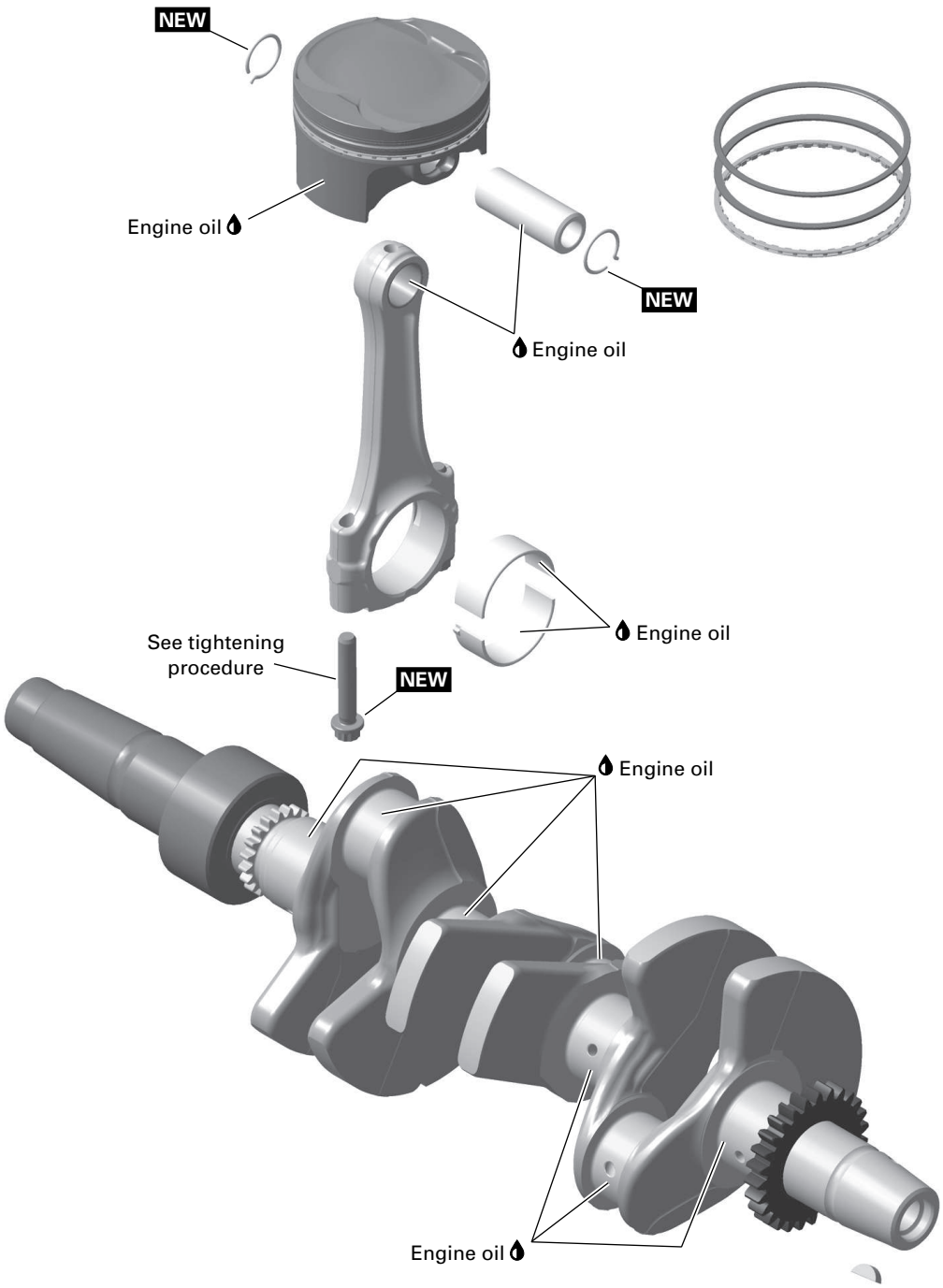


**NEW** = Component must be replaced when removed.

## General

This section refers to the following ECM:

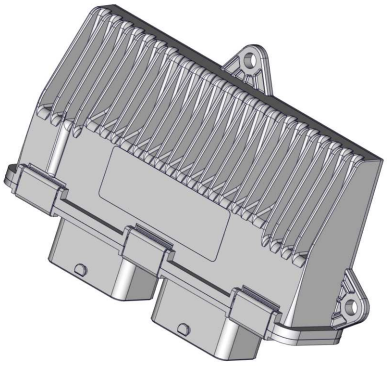

*ECM GEN1 – ME17*

**NOTE:** For a better understanding, some illustrations are taken with engine out of the vehicle.

Disconnect the battery before working on the engine.

**NOTICE**

**Always disconnect BLACK (-) cable first and reconnect last.**

During the assembly or the installation, use the torque values and service products as in the exploded views.

Clean threads before applying a threadlocker. Refer to *Self-Locking Fasteners* and *Loctite Application* at the beginning of this manual for complete procedure.

**⚠ WARNING**

**Torque wrench tightening specifications must be strictly adhered to.**
**Locking devices when removed (e.g.: locking tabs, cotter pin, etc.) must be replaced.**

**NOTICE**

**Hoses, cables or locking ties removed during a procedure must be reinstalled as per factory standards.**

When disassembling parts that are duplicated in the engine, (e.g. valves, springs), it is strongly recommended to note their position and to keep the parts of the same assembly as a “group”. If you find a defective component, it will be much easier to find the cause of the failure. Since parts were break-in together during the engine operation, they will keep their matched fit when parts are reassemble together within their “group”.

## Troubleshooting

Always check for fault codes. If a fault code is detected, service the fault code first. Refer to *Diagnostic and Fault Codes* subsection.

### *Troubleshooting*

**1. Unusual Engine Noise or Vibrations**

Heavy wear on plain bearings.

– *Check radial play of plain bearings. Replace if out of specification.*

Crankshaft axial play out of specification.

– *Measure crankshaft axial play. If crankshaft axial play is out of specification, replace thrust washers.*

Connecting rod axial play out of specification.

– *Measure connecting rod axial play on crankshaft. Replace connecting rod or crankshaft if out of specification.*

Connecting rod screws got loose.

– *Replace damaged components and retighten screws with the recommended torque.*

Crankshaft PTO ball bearing (900 ACE models) / roller bearing is worn.

– *Remove PTO cover and check bearing for excessive play. Replace bearing if necessary.*

**2. Blue Smoke in the Exhaust**

Oil scraper rings worn out.

– *Replace piston rings.*

**3. Engine Suddenly Turns Off (Poor Idling)**

Piston rings worn out.

– *Replace piston rings.*

Piston/cylinder clearance out of specification.

– *Check piston/cylinder clearance. Replace if out of specification.*

Melted or broken piston.

– *Replace piston and cylinder block if necessary.*

## Procedures

### *Knock Sensor (KS)*

This engine is equipped with one knock sensor (KS) that measures the amount of noise generated by the engine.

If an abnormally high amount of noise is measured, the ECM perceives this as a KNOCK condition and adjusts ignition timing by retarding it to correct the situation.

### *Knock Sensor Location*

The knock sensor (KS) is located on the cylinder block behind the turbocharger.

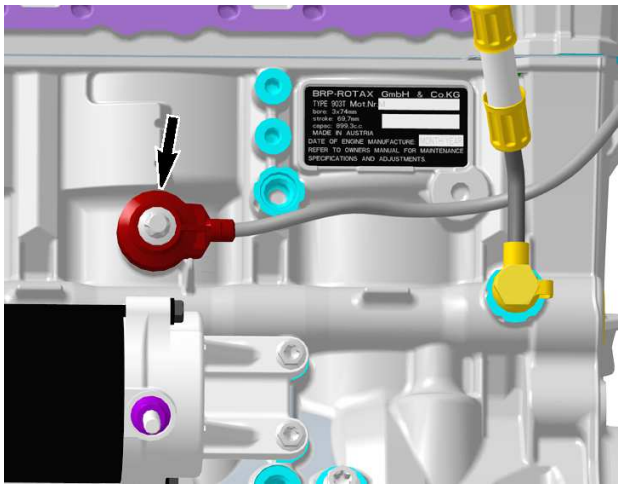


*ENGINE - EXHAUST SIDE, PARTS REMOVED FOR CLARITY*

### *Knock Sensor Troubleshooting*

Always use the BRP diagnostic software (BUDS2) to check for a knock sensor related fault code and carry out service actions.

Knock sensor problems may be related to, but not limited to any of the following items:

- Loose or improperly torqued knock sensor
- Dirty or corroded mounting surface
- Cracked knock sensor from over torquing
- Bad wiring and connections
- An induced knock (or vibration) due to a loose part external to the engine.

### *Testing the Knock Sensor (KS)*

### *Testing KS Operation (Dynamic Test)*

1. Using BUDS2 to check for a knock sensor fault. If an occurred fault is present, reset the fault.
2. Disconnect vehicle from BUDS2 and make vehicle ready for a test ride.
3. During test ride, perform several accelerations under load and ensure engine RPM exceeds 4000 RPM.
4. After test ride, reconnect vehicle to BUDS2 and look for a knock sensor fault code.
5. If no fault code occurs, the knock sensor is good.
6. If a fault occurs, do the following:
   - Refer to *Knock Sensor Troubleshooting* and check for any of the problems listed. Repair as required.
   - Carry out a knock sensor resistance test.

### *Testing the KS Resistance at the ECM*

1. Disconnect ECM-A connector and install it on the ECM adapter tool.

| | |
|---|---|
| **ECM adapter tool (P/N 529036166)** |  |

2. Set multimeter to "Ω", measure the knock sensor circuit resistance as per following table.

| KS Resistance Test at the ECM | | |
|---|---|---|
| **ECM Adapter Pins** | | **Specification @ 20 °C (68 °F)** |
| C3 | G2 | 5 MΩ |

3. If knock sensor circuit resistance is as specified, wiring harness and sensor are good.
4. If resistance measured at ECM connector is not close to specification, refer to *Testing the KS Resistance at the Component Connector*.

### *Testing the KS Resistance at the Component Connector*

1. Remove the required parts to access the knock sensor connector.
2. Disconnect the knock sensor connector.
3. Measure the resistance between both terminals on the knock sensor and compare the measurement with the preceding table.
4. If resistance is not as specified, replace knock sensor.
5. If resistance is good at the knock sensor, carry out a continuity check of the wiring between the knock sensor connector and ECM connector "A". Refer to applicable *Wiring Diagram* for details.

**NOTE:** Although the knock sensor resistance is as specified, it may still be at fault as it may not be producing a signal within its design specification.

6. Repair or replace wiring and connectors between the ECM and knock sensor.

### *Replacing the KS*

1. Remove the upper body module. Refer to *Body* subsection.
2. Remove the pulleys guard.
3. Cut locking tie and disconnect KS sensor connector. Refer to *Knock Sensor Access* in this subsection.
4. Cut locking ties securing wiring harness and KS cable.

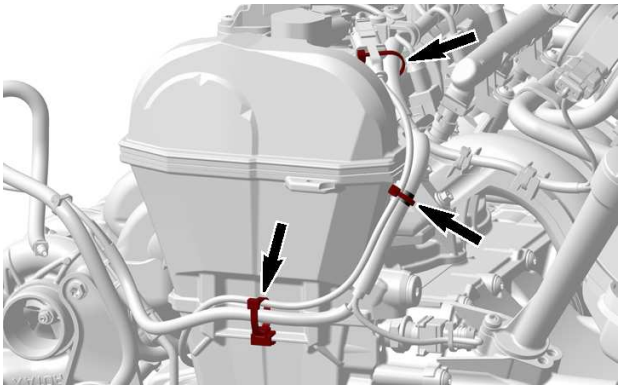

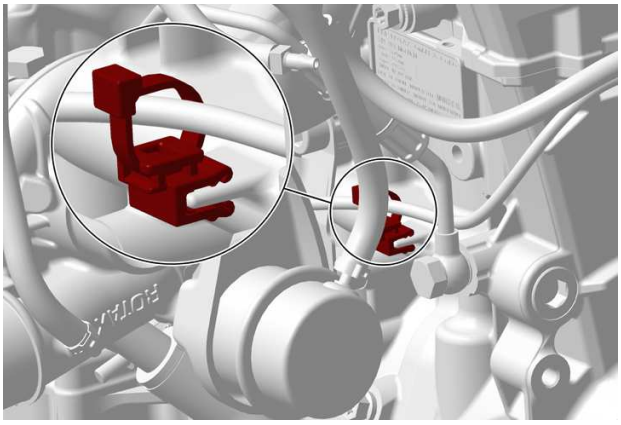

5. Remove turbocharger. Refer to *Turbocharger - GEN1* subsection.
6. Remove knock sensor mounting screw.
7. Clean:
   - Knock sensor contact surface on cylinder
   - Threaded hole.
8. Install new knock sensor and tighten as specified.

| Loctite 243 (blue) |
|---|

| Tightening Torque | |
|---|---|
| Knock sensor screw | 24 ± 3 Nm<br>(18 ± 2 lbf-ft) |

**NOTICE**

**Improper torque may prevent sensor from functioning properly and lead to severe damage of internal engine components.**

9. Ensure knock sensor connector is clean and corrosion free before connecting it.
10. Install locking ties.

**NOTE:** Ensure that the wires are close-fitting the cylinder head and cylinder block.

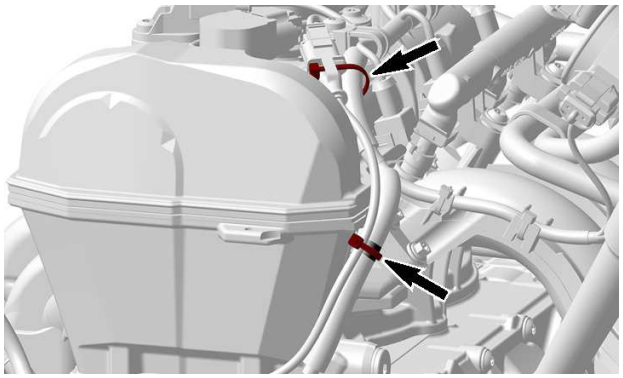

11. Install **NEW** locking tie with mount to the KS wire and BCV wire.

**NOTE:** Wires have to be fixed one above the other

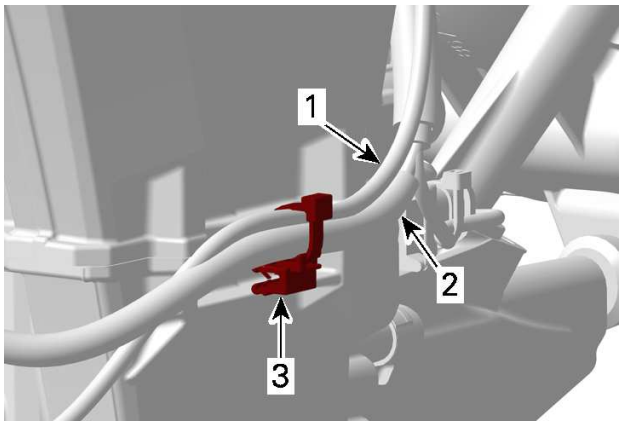


*1. KS wire*
*2. BCW wire*
*3. New locking tie with mount*

12. Install locking tie with mount to the casting rib at the cylinder block PTO side.

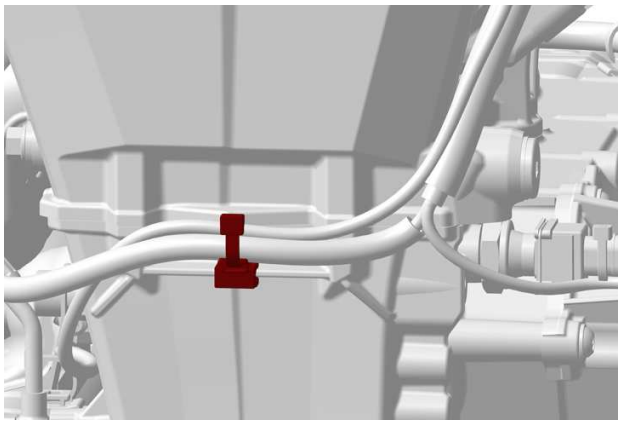

13. Install **NEW** locking tie with mount to the casting rib at the cylinder block exhaust side.

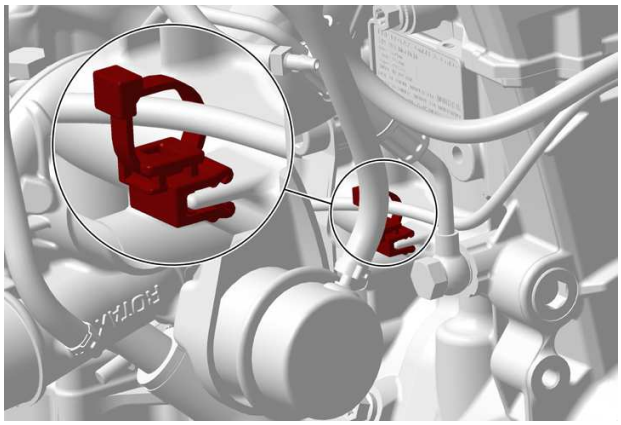

14. Reinstall all remaining removed parts.

### *PTO Cover and PTO Oil Seal*

#### *PTO Cover Access*

To replace the PTO oil seal, it is not necessary to remove the engine from the vehicle.

Remove the drive pulley. Refer to *Drive System and Brake* subsection.

#### *Removing the PTO Cover*

1. Remove screws retaining the PTO cover.
2. Remove PTO cover and discard gasket.

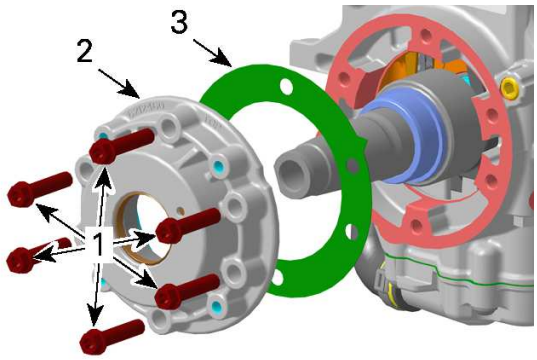


***TYPICAL - 900 ACE ENGINE SHOWN***
1. *PTO cover screws*
2. *PTO cover*
3. *Gasket*

#### *Replacing the PTO Oil Seal and Bearing*

Always replace the PTO oil seal and bearing at the same time.

#### *Removing the PTO Oil Seal and Bearing*

1. Use pliers to remove inner retaining ring.

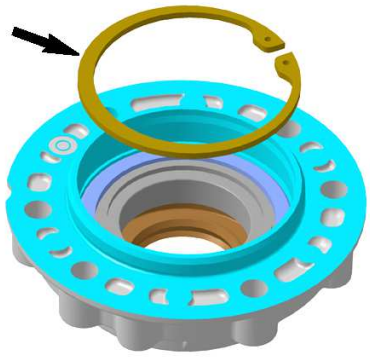

2. Heat PTO cover up to 130 °C (266 °F) before removing the bearing and oil seal.

| NOTICE |
| --- |
| **Clean PTO cover from oil before heating.** |

3. Carefully push out oil seal and bearing.

| | |
| --- | --- |
| **Punch, 4 mm (.157 in)** |  |

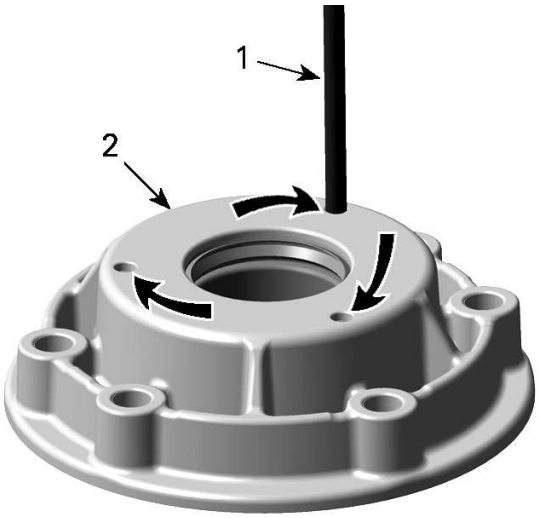


*TYPICAL - PUSH OUT CIRCULAR*
1. *Punch*
2. *PTO cover*

4. Remove and discard bearing and oil seal.

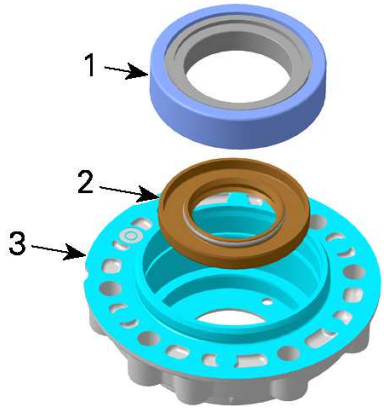


1. *Roller bearing*
2. *Oil seal*
3. *PTO cover*

### *Installing the PTO Oil Seal and Bearing*

**NOTE:** Check the oil seal running surface of crankshaft for grooves and deposits, before installation of NEW oil seal.

1. Clean crankshaft PTO side from deposits.
2. Clean oil seal and bearing areas in PTO cover.
3. Lubricate oil seal outer diameter and sealing lip.

| **Super Lube grease** |
|---|

4. Press **NEW** oil seal in PTO cover.

| **Oil seal/bearing pusher (P/N 529036284)** |  |
|---|---|

**NOTICE**

**Oil seal must be installed with sealing lip facing to the engine.**

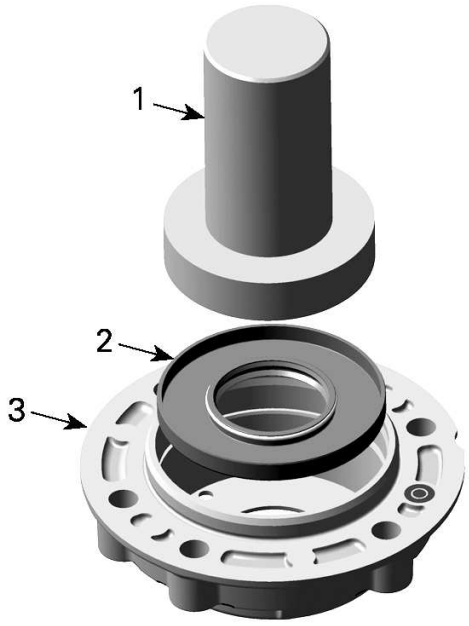


1. *Oil seal/bearing pusher*
2. *Oil seal*
3. *PTO cover*

5. ***900 ACE Models***
6. Place **NEW** ball bearing in PTO cover with open side of plastic cage facing towards the engine.
7. ***All models***
8. Carefully press in bearing.

| **Oil seal/bearing pusher (P/N 529036284)** |  |
|---|---|

**NOTICE**

**During installation never push on the inner race of the bearing.**

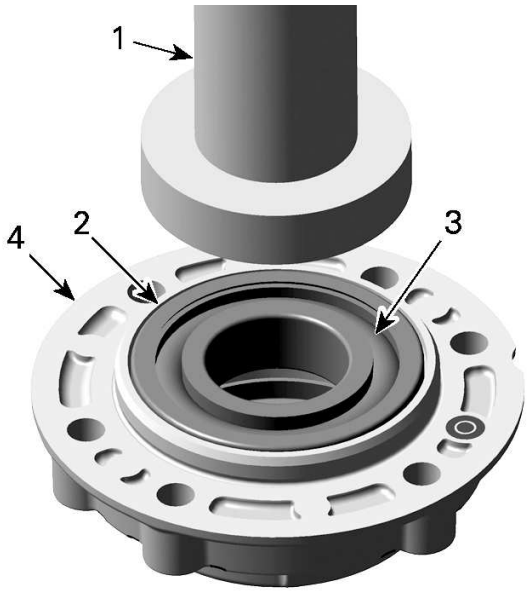


1. *Oil seal/bearing pusher*
2. *Ball bearing*
3. *Open side of plastic cage*
4. *PTO cover*

9. ***900 ACE Models***
10. ***All Models***
11. Install retaining ring.

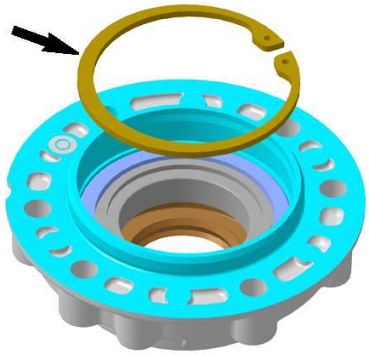

### *Installing the PTO Cover*

The installation is the reverse of the removal procedure. However, pay attention to the following.

1. Install a **NEW** PTO cover gasket in proper position.

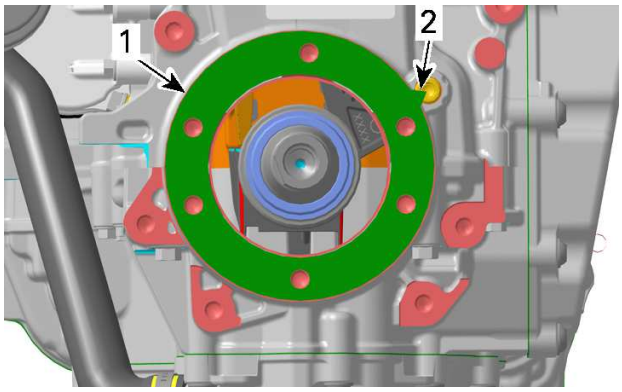


1. *Gasket*
2. *Tab*

2. Tighten PTO cover screws as per following sequence.

| **Loctite 243 (blue)** |
|---|

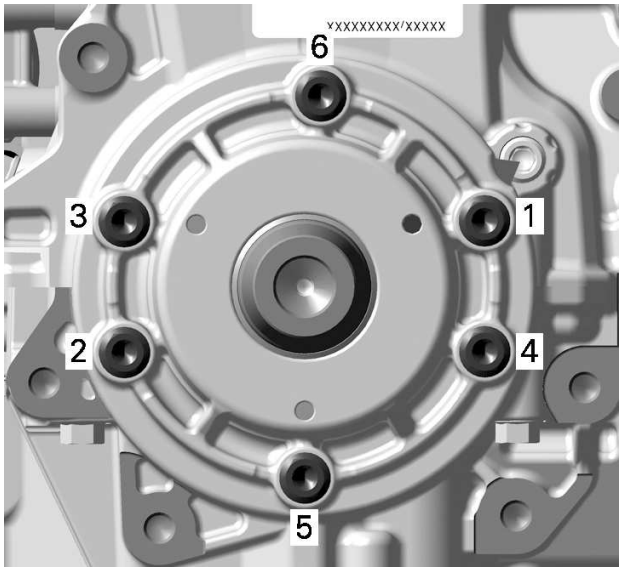


***PTO COVER TIGHTENING SEQUENCE***

| **Tightening Torque** | |
|---|---|
| PTO cover screws | 23 ± 3 Nm<br>(17 ± 2 lbf-ft) |

## *Cylinder Block*

### *Disassembling the Cylinder Block*

1. Remove the engine from the vehicle. Refer to *Engine Removal and Installation* subsection.
2. Drain engine oil. Refer to *Lubrication System - GEN1* subsection.
3. Refer to *Ignition Coils and Spark Plugs - GEN1* subsection and remove:
   - Ignition coils
   - Spark plugs.

4. Remove valve cover. Refer to *Cylinder Head - GEN1* subsection.
5. Lock crankshaft, refer to *Ccrankshaft Locking Procedure* in this subsection.
6. Remove air intake manifold. Refer to *Intake Manifold - GEN1* subsection.
7. Refer to *Cooling System - Engine Components - GEN1* subsection and remove:
   - Water pump housing
   - Thermostat
   - Water pump drive gear.
8. Refer to *Lubrication System - GEN1* subsection and remove:
   - Oil tank
   - Oil cooler
   - Oil pressure regulator
   - Oil pump drive gears and oil pumps
   - Oil sump cover
   - Oil strainers.
9. Refer to *Magneto and Starter - GEN1* subsection and remove:
   - Magneto cover
   - Rotor
   - Starter drive gears
   - Electric starter.
10. Refer to *Timing Chain* subsection and remove:
    - Timing chain tensioner
    - Timing chain guides.
11. Refer to *Cylinder Head - GEN1* subsection and remo ve:
    - Camshaft holders
    - Cylinder head.
12. Remove PTO cover. Refer to *PTO Cover and PTO Oil Seal* in this subsection.

**NOTE:** Before splitting the cylinder block, measure crankshaft axial play. Refer to *Crankshaft* in this subsection.

13. Remove crankshaft locking tool.
14. Remove cylinder block screws.

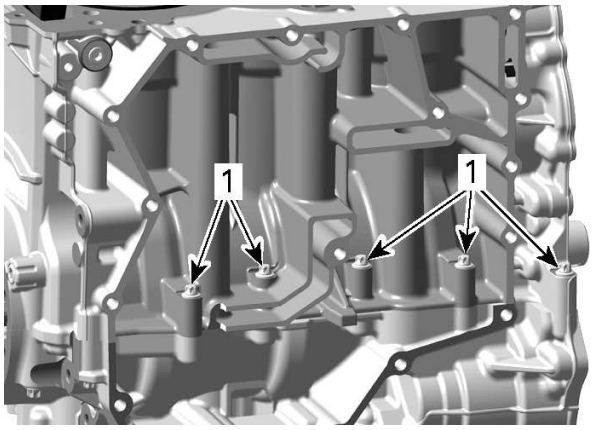


***INTAKE SIDE***
*1. Cylinder block screws (M6) screwed from top to bottom*

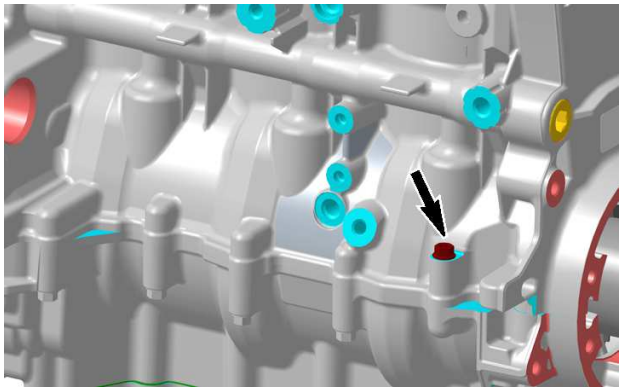

***TYPICAL - CYLINDER BLOCK SCREW (M6) SCREWED FROM TOP TO BOTTOM - EXHAUST SIDE***

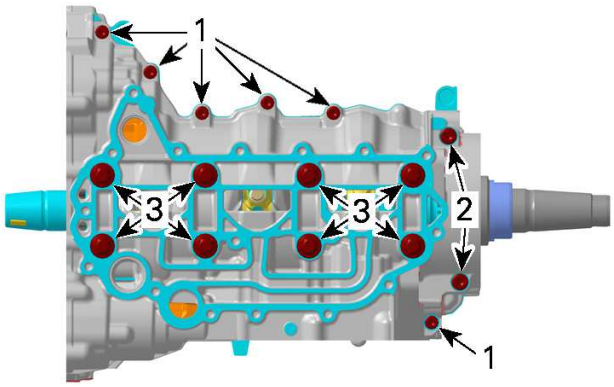


***BOTTOM SIDE***
*1. M6 screws*
*2. M8 screws*
*3. M9 screws (discard)*

1. Start removing the M6 screws.
2. Then remove the M8 screws.
3. Finally remove and discard the M9 screws.

15. Carefully remove cylinder block lower half by using a soft hammer.

**NOTE:** Take care not to damage the sealing surfaces of the cylinder block halves.

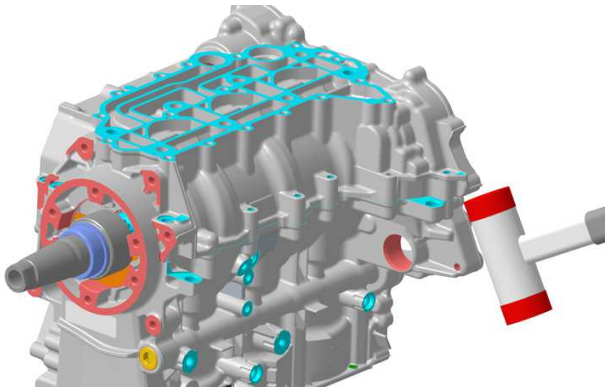

16. Remove connecting rod caps. Refer to *Pistons and Connecting Rods* in this subsection.
17. Refer to *crankshaft* in this subsection and remove:
    - Crankshaft thrust washers
    - Crankshaft.
18. Remove pistons and connecting rods. See procedure in this subsection.

### *Removing the Plain Bearing*

When the plain bearings need to be removed from the cylinder block, mark them to identify the correct position at installation. See the illustration as an example.

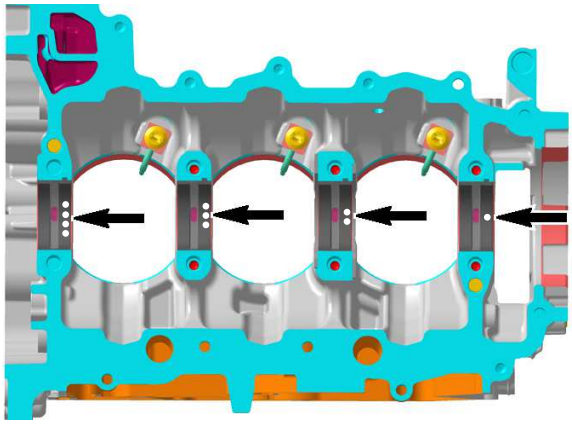

***900 ACE ENGINE SHOWN - MARKS ON CRANKSHAFT PLAIN BEARINGS***

### *Cleaning the Cylinder Block*

1. Clean cylinder block using a part cleaner, then use compressed air to dry it.
2. Blow out the oil orifices using compressed air and make sure they are not clogged.
3. Inspect oil nozzles. Refer to *lubrication system - GEN1* subsection.

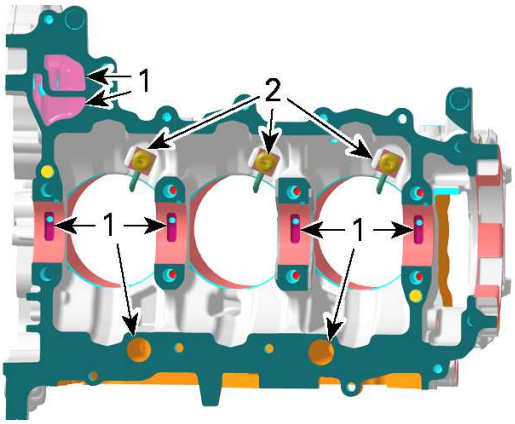


***900 ACE ENGINE SHOWN - CYLINDER BLOCK UPPER HALF***
*1. Oil orifices*
*2. Oil nozzles*

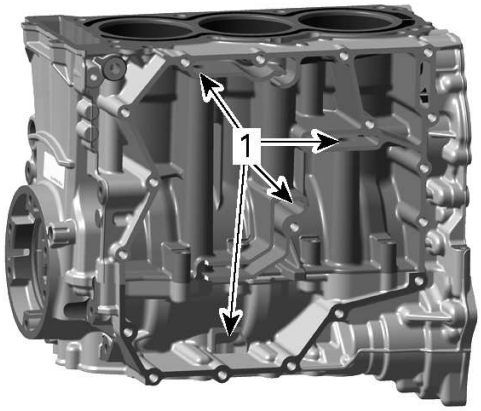


***CYLINDER BLOCK - REAR***
*1. Oil orifices*

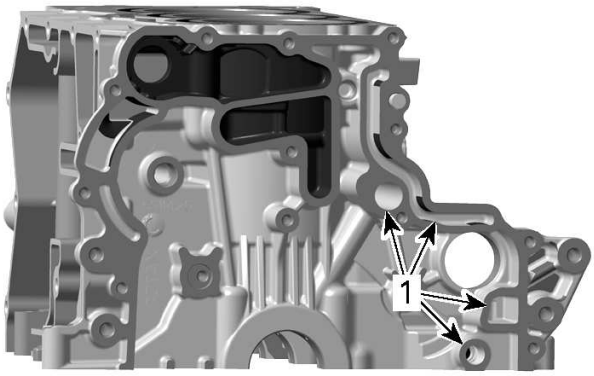


***CYLINDER BLOCK - MAG SIDE***
*1. Oil orifices*

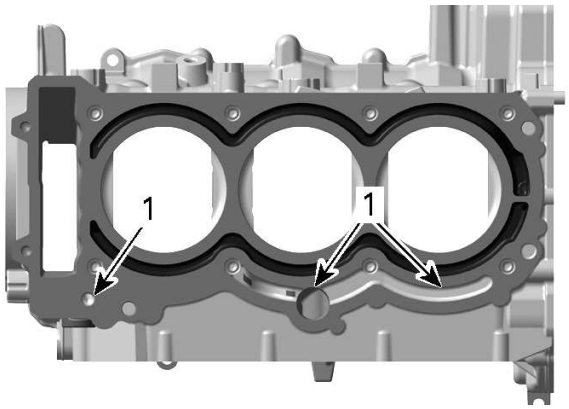


*CYLINDER BLOCK - TOP*
*1. Oil orifices*

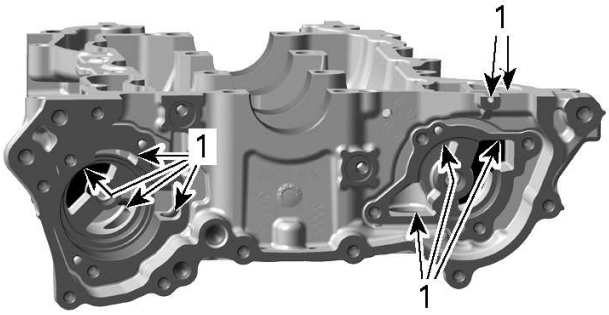


*CYLINDER BLOCK LOWER HALF*
*1. Oil orifices*

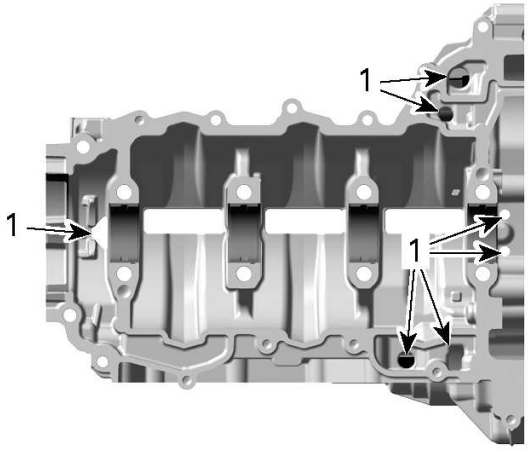


*CYLINDER BLOCK LOWER HALF*
*1. Oil orifices*

4. ***All Models***
5. Clean all metal components in a solvent.
6. Clean cylinder block mating surfaces with gasket remover and a brass brush. Brush a first pass in one direction then make the final brushing perpendicularly (90°) to the first pass (cross hatch).

| **Loctite chisel (gasket remover)** |
|---|

7. Do not wipe with rags. Use a new clean hand towel only.

### *Inspecting the Cylinder Block*

1. Check cylinder block for cracks or other damage.
2. Check cylinder block mating surfaces for flatness using a straight edge.
3. Replace cylinder block if necessary.
4. Check cylinder bores for cracks, scoring and wear ridges on top and bottom of the cylinders.

### *Cylinder Taper*

1. Measure cylinder bore diameter at 4 recommended positions. See illustration.

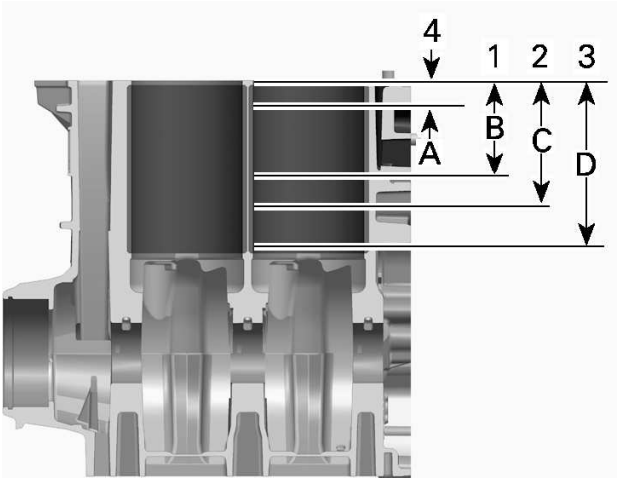


*TYPICAL*
*1. First measure*
*2. Second measure*
*3. Third measure*
*4. Fourth measure*
*A. 5 to 10 mm (.197 to .394 in)*
*B. 30 to 35 mm (1.181 to 1.378 in)*
*C. 57 to 62 mm (2.244 to 2.441 in)*
*D. 111 to 113 mm (4.37 to 4.449 in)*

The difference between measurements should not exceed the service limit mentioned in next table.

| **Cylinder Taper** | |
|---|---|
| New maximum | 0.030 mm (.0012 in) |
| Service limit | 0.050 mm (.002 in) |

### *Cylinder Out of Round*

1. Measure cylinder bore diameter as shown and at the same measuring points as for *Cylinder Taper*.

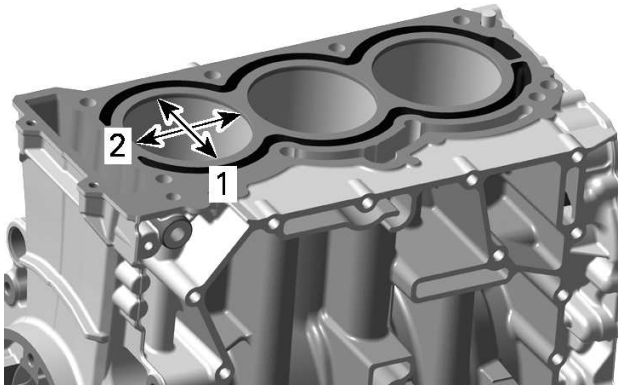


1. *Perpendicular to piston pin axis*
2. *Parallel to piston pin axis*

2. To obtain the cylinder out of round, calculate the difference between the perpendicular measures.

| Cylinder Out Of Round | |
|---|---|
| New maximum | 0.008 mm (.0003 in) |
| Service limit | 0.030 mm (.0012 in) |

### *Inspecting Plain Bearings Diameter*

1. Check the plain bearings for scoring or other damages.
2. Measure plain bearing inside diameter and compare with crankshaft bearing journal diameter (refer to *Crankshaft* in this subsection). Proceed as follows.

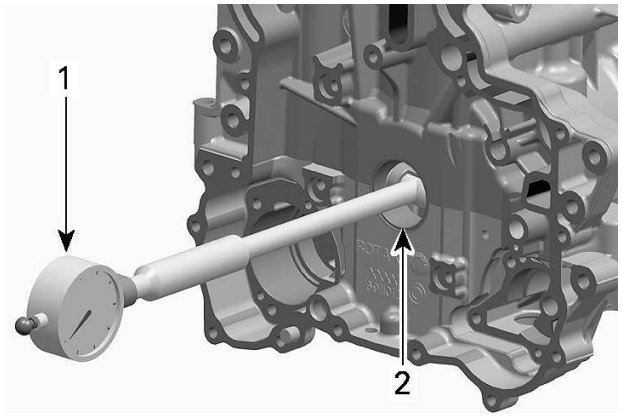


1. *Bore gauge*
2. *Crankshaft plain bearing*

| Crankshaft Plain Bearing Inside Diameter | |
|---|---|
| Service limit | 36.080 mm (1.4205 in) |

1. Use the OLD plain bearings and put both cylinder block halves together.
2. Tighten screws as described in *Assembling the Cylinder Block*.
3. Measure the inside diameter of the crankshaft plain bearings using a bore gauge.

3. Replace bearings if they are out of specifications.

### *Assembling the Cylinder Block*

The assembly is the reverse of the disassembly procedure. However, pay attention to the following.

1. Correctly reinstall plain bearings as follows.
   1. Use **NEW** bearings if diameters are out of specification. Refer to *Inspecting Plain bearing Diameter* in this subsection.
   2. Install bearings with lubrication grooves in the cylinder block upper half.

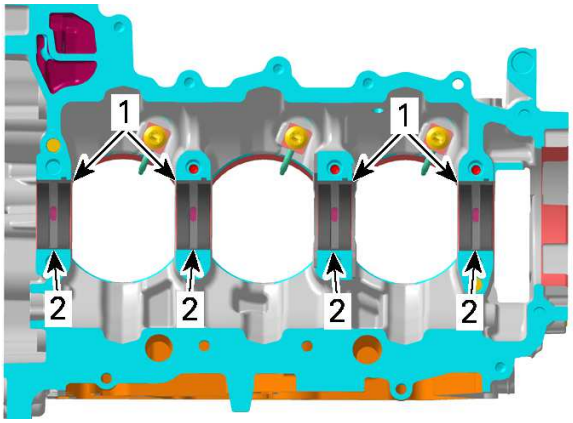


***900 ACE ENGINE SHOWN***

*i. Plain bearings*
*ii. Lubrication grooves*

   3. Install flat bearings in the cylinder block lower half.

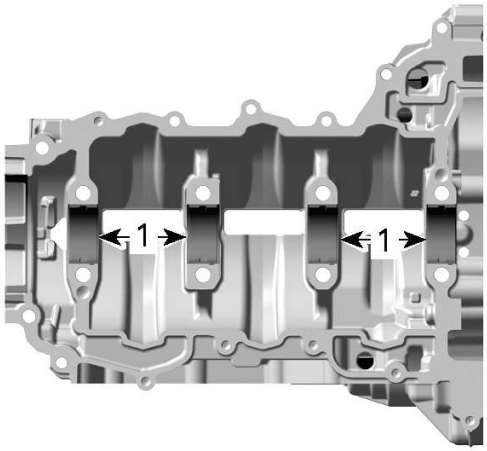


*i. Flat bearings*

**NOTICE**

**Bearings must be flush with the cylinder block split surface and their protrusions have to fit in the notched areas in the cylinder block seat.**

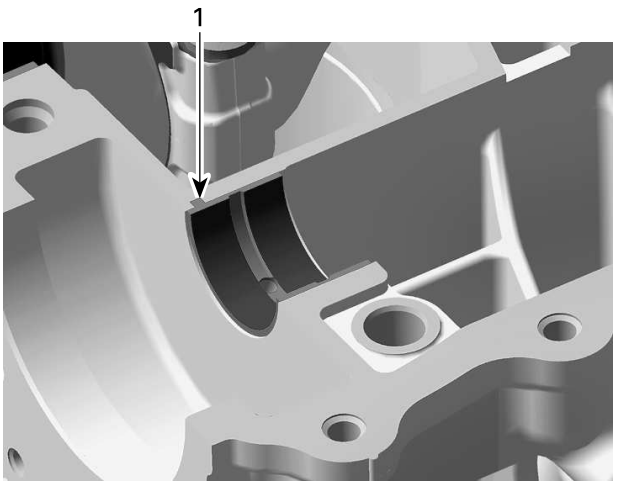


***TYPICAL***

*i. Bearing protrusion in cylinder block notch*

2. Install pistons, refer to *Pistons and Connecting Rods* in this subsection.
3. Apply engine oil on all plain bearings.
4. Install the following components:
   - Crankshaft and thrust washers (refer to *Crankshaft*)
   - Connecting rod caps (refer to *Pistons and Connecting Rods*).
5. Apply sealant on mating surface of cylinder block lower half as shown on next illustration.

**Loctite 5910**

**IMPORTANT**: When beginning the application of the cylinder block sealant, the assembly and first tightening have to be done within 12 minutes. It is suggested to have all you need on hand to save time.

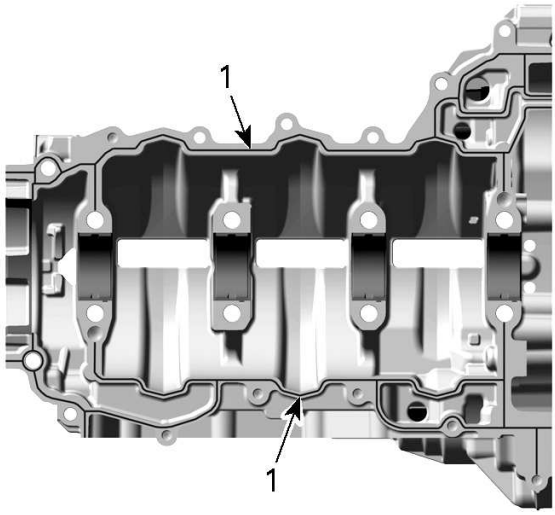


*1. Apply Loctite 5910 following this pattern*

**NOTICE**

**Ensure not to apply too much sealant, as it will spread out inside the cylinder block.**

**NOTICE**

**Take care that the bypass passage of the engine oil pressure regulator is not clogged with sealant.**

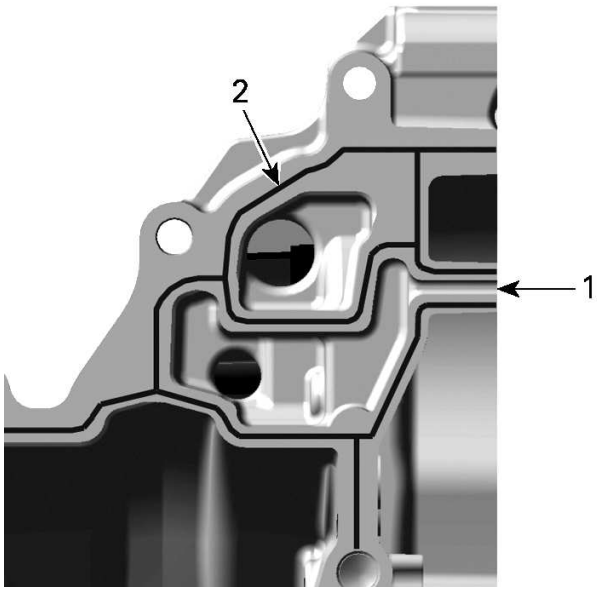


*1. Bypass passage of engine oil pressure regulator*
*2. Loctite 5910 applied*

6. Install **NEW** cylinder block M9 screws and tighten as follows.

| NOTICE |
| --- |
| **This assembly uses stretch screws. Always use NEW screws and strictly adhere to the tightening procedure.** |

1. Torque the M9 screws according the sequence.

| Tightening Procedure | | |
| --- | --- | --- |
| Cylinder block M9 screws | Step A | 20 ± 2 Nm (15 ± 1 lbf-ft) |

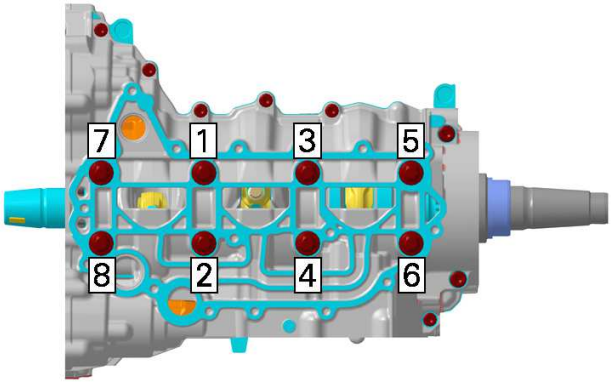


*M9 SCREWS TIGHTENING SEQUENCE - FIRST AND SECOND STEPS*

2. Use a torque angle gauge to carry out the second step, following the same sequence.

| Tightening Procedure | | |
| --- | --- | --- |
| Cylinder block M9 screws | Step B | Additional 150° ± 5° |

7. Install M8 screws and tighten as follows.

| Tightening torque | |
| --- | --- |
| Cylinder block M8 screws | 23 ± 2 Nm (17 ± 1 lbf-ft) |

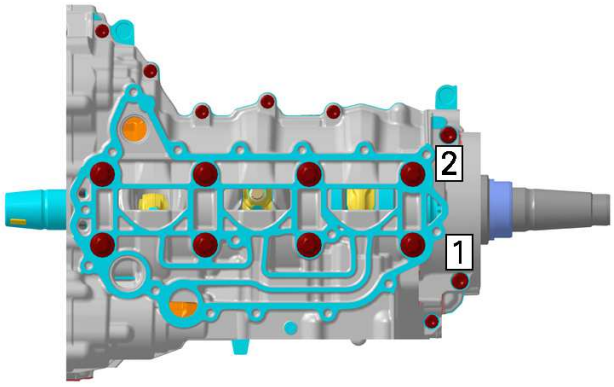


*M8 SCREWS TIGHTENING SEQUENCE*

8. Install the M6 screws and tighten as follows.

| Tightening Torque | |
| --- | --- |
| Cylinder block M6 screws | 9 ± 1 Nm (80 ± 9 lbf-in) |

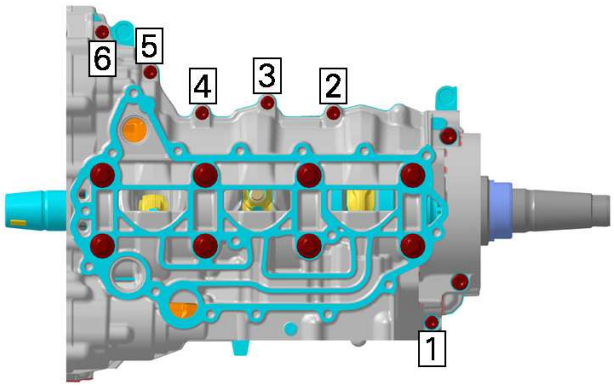


*M6 SCREWS TIGHTENING SEQUENCE (BOTTOM OF CRANKCASE)*

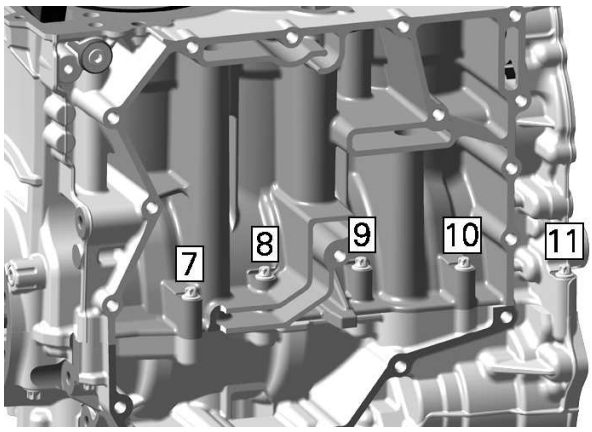


*M6 SCREWS TIGHTENING SEQUENCE (INTAKE SIDE OF CRANKCASE)*

T

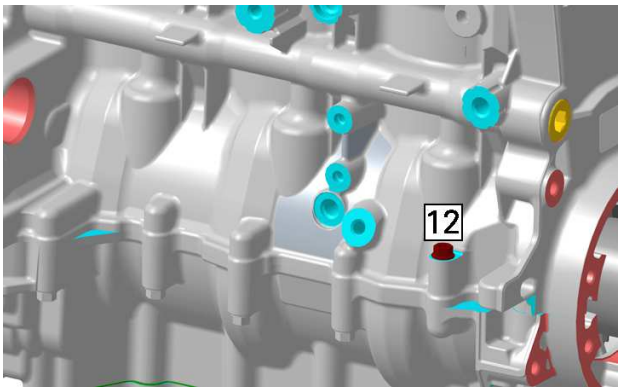


*TYPICAL - M6 SCREW TIGHTENING SEQUENCE (EXHAUST SIDE OF CRANKCASE)*

**NOTE:** Check the crankshaft axial play before continuing the assembly. Refer to *Crankshaft* in this subsection.

9. Lubricate PTO oil seal properly before reinstalling the PTO cover. Refer to *PTO Cover and PTO Oil Seal* in this subsection.
10. Reassemble engine in accordance with the proper assembly procedures.

### *Crankshaft*

#### *Crankshaft Locking Procedure*

**NOTICE**

**When crankshaft is locked, the second cylinder is set to TDC.**

**NOTICE**

**Crankshaft must be locked whenever the magneto rotor retaining nut has to be removed or whenever working on the valve train.**

**NOTICE**

**When working on the valve train or timing chain, crankshaft must be locked with the marks "IN" and "EX" on the camshaft timing gears facing each other.**

1. If working on the valve train or timing chain, remove the valve cover. Refer to *Cylinder Head - GEN1* subsection.
2. Remove spark plugs.
3. Remove crankshaft access plug and discard gasket ring.

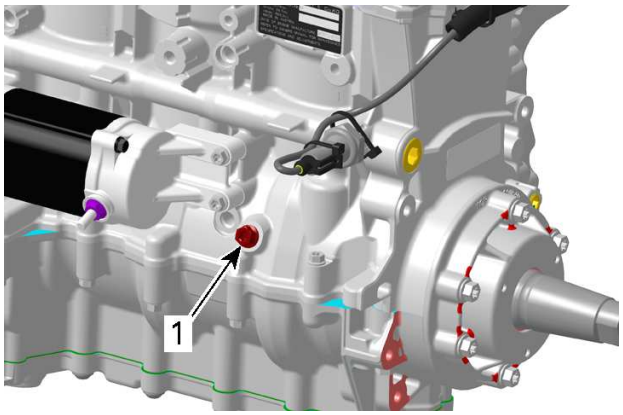


*1. Crankshaft access plug*

4. ***900 ACE Models***
5. Turn engine on PTO side counterclockwise to bring crankshaft to locking position.

**NOTICE**

**For turning the crankshaft install drive pulley or use a suitable screw locked by a counter nut.**

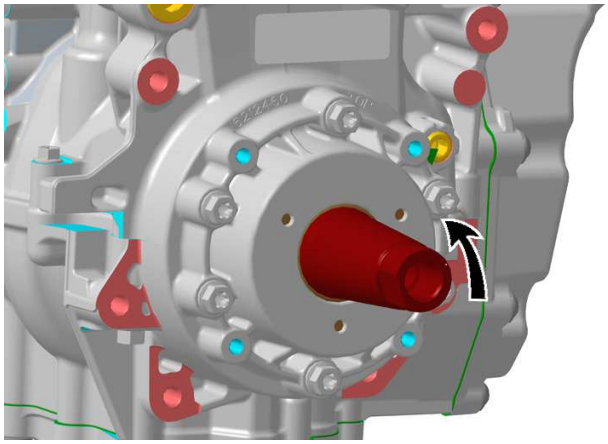

**NOTICE**

**Crankshaft locking position is reached when marks "IN" and "EX" on the camshaft timing gears face each other.**

6. Use a flashlight to check if the groove in the crankshaft is aligned with the hole.
7. Lock crankshaft.

| | |
|---|---|
| **Crankshaft locking tool (P/N 529036272)** |  |

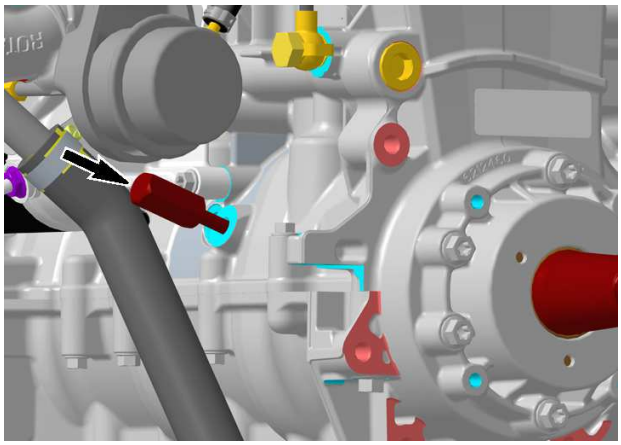

*TYPICAL - 900 ACE ENGINE SHOWN*

### *Removing the Crankshaft*

1. Disassemble *Cylinder Block*, see procedure in this subsection.
2. Remove connecting rod caps. Refer to *Pistons and Connecting Rods* in this subsection.
3. Remove crankshaft thrust washers.

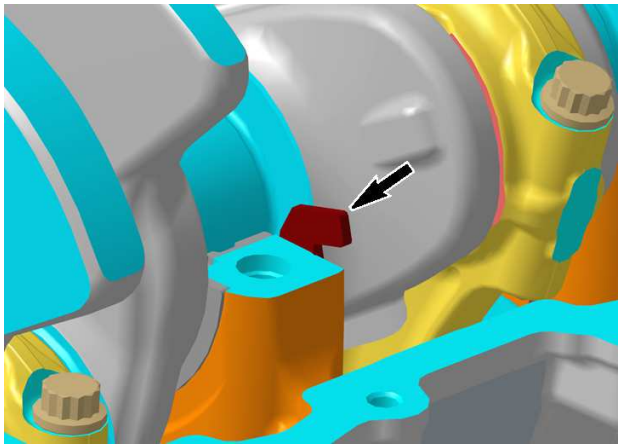

4. Remove crankshaft from cylinder block.

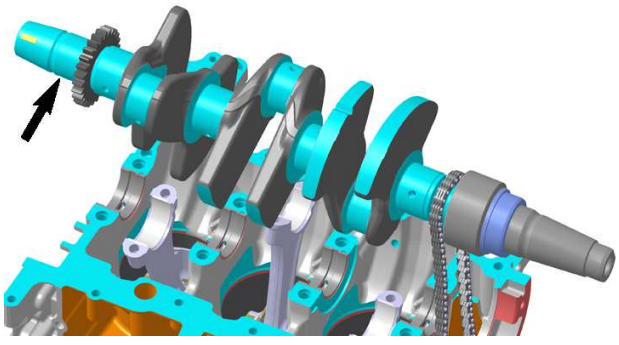

*TYPICAL*

### *Inspecting the Crankshaft*

1. Check each bearing journal of crankshaft for scoring, scuffing, cracks or other signs of wear.
2. Check if crankshaft gears are worn or otherwise damaged.

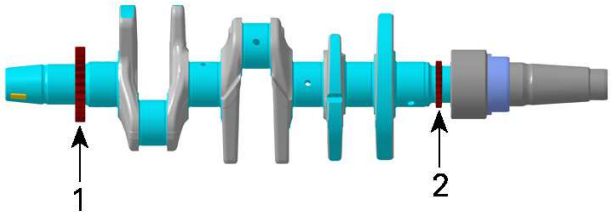


*TYPICAL*
*1. Oil pump drive gear*
*2. Crankshaft timing gear*

3. Replace crankshaft if damaged.
4. Blow the oil orifices using compressed air and make sure they are not clogged.

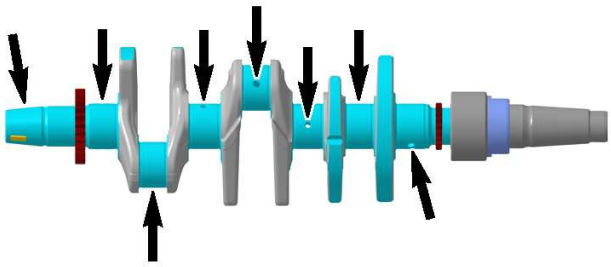

*TYPICAL*

### *Crankshaft Radial Play*

1. Measure crankshaft bearing journal diameter, using a micrometer.

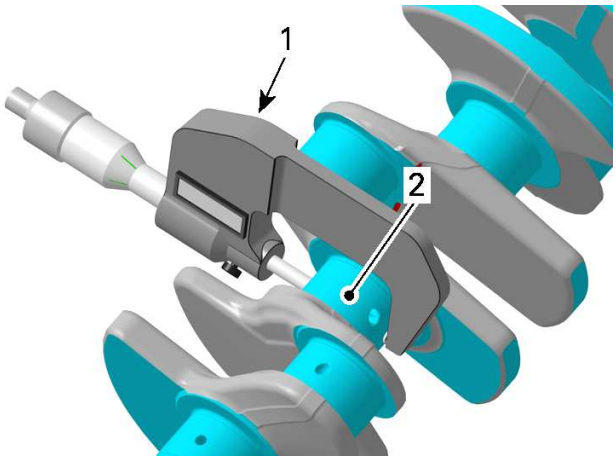


1. *Micrometer*
2. *Crankshaft area for plain bearing*

2. To obtain the radial play, calculate the difference between the bearing journal diameter and the crankshaft plain bearings inner diameter (see *Cylinder Block* in this subsection.

| Crankshaft Bearing Journal Diameter | |
|---|---|
| New | 35.990 to 36.006 mm (1.4169 to 1.4176 in) |
| Service limit | 35.960 mm (1.4157 in) |

| Crankshaft Radial Play | |
|---|---|
| Service limit | 0.08 mm (.0031 in) |

### *Crankshaft Pin Diameter*

1. Measure crankshaft pin diameter, using a micrometer.
2. To obtain the radial play, calculate the difference between the crankshaft pin diameter and the connecting rod plain bearings inner diameter (see *Inspecting the Connecting Rod* in this subsection).

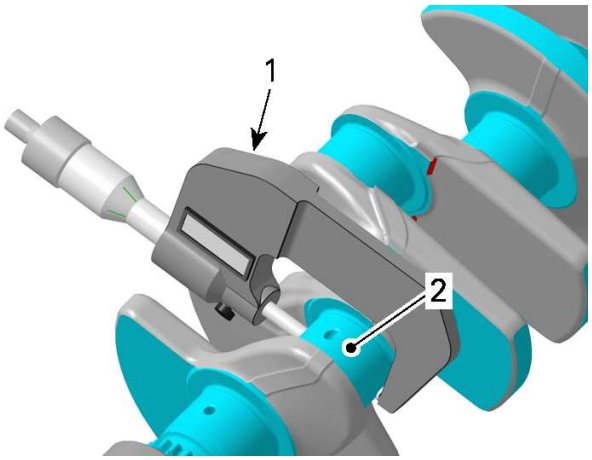


1. *Micrometer*
2. *Crankshaft pin area for plain bearing*

| Crankshaft Pin Diameter | |
|---|---|
| New | 35.979 to 35.995 mm (1.4165 to 1.4171 in) |
| Service limit | 35.969 mm (1.4161 in) |

| Connecting Rod Big End Radial Play | |
|---|---|
| Service limit | 0.08 mm (.0031 in) |

### *Crankshaft Axial Play*

1. With the crankshaft in the cylinder block, measure the crankshaft axial play, using a dial indicator.

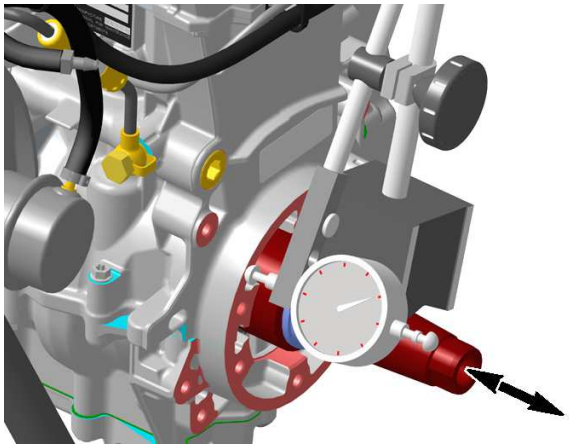

***TYPICAL***

| Crankshaft Axial Play | |
|---|---|
| New | 0.120 to 0.352 mm (.005 to .014 in) |
| Service limit | 0.450 mm (.018 in) |

2. If play is out of specification, replace the crankshaft thrust washers and repeat measurement.

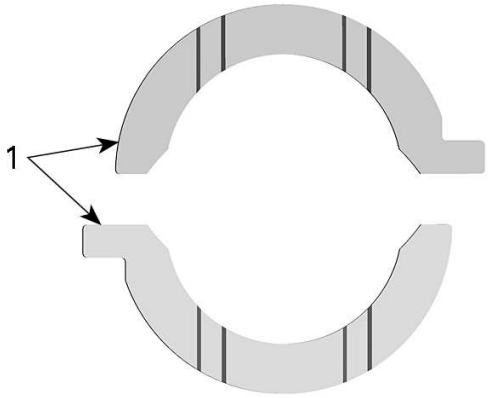


*TYPICAL*
*1. Crankshaft thrust washers*

### *Installing the Crankshaft*

The installation is the reverse of the removal procedure. However, pay attention to following.

1. Turn cylinder block upside down.

**NOTICE**

**Be careful that connecting rods do not hit the cylinder block.**

2. Apply engine oil on all plain bearings before installing them.
3. Install crankshaft along with the timing chain.
4. Lubricate (both sides) and reinstall crankshaft thrust washers with the slots facing against crankshaft counterweights.

**NOTE:** Thrust washers have to be flush with the cylinder block sealing surface.

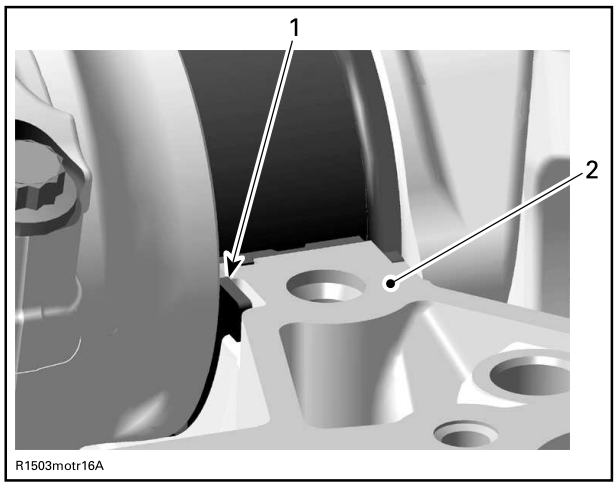


*TYPICAL*
*1. Thrust washer*
*2. Sealing surface*

5. Install connecting rod caps. Refer to *Pistons and Connecting Rods* in this subsection.

**NOTICE**

**It is absolutely necessary to follow this procedure. Otherwise severe engine damage can occur.**

6. Install cylinder block lower half. Refer to *Cylinder Block* in this subsection.
7. Lock crankshaft before further assembly of the engine. See *Crankshaft Locking Procedure* in this subsection.

### *Pistons And Connecting Rods*

### *Removing the Piston and Connecting Rod*

**NOTE:** It is recommended to measure connecting rod big end axial play prior to remove connecting rod. Refer to *Inspecting the Connecting Rod* in this subsection.

1. Disassemble *Cylinder Block* as per procedure in this subsection.
2. Remove connecting rod cap.

**NOTICE**

**Mark cylinder position of connecting rod before disassembly.**

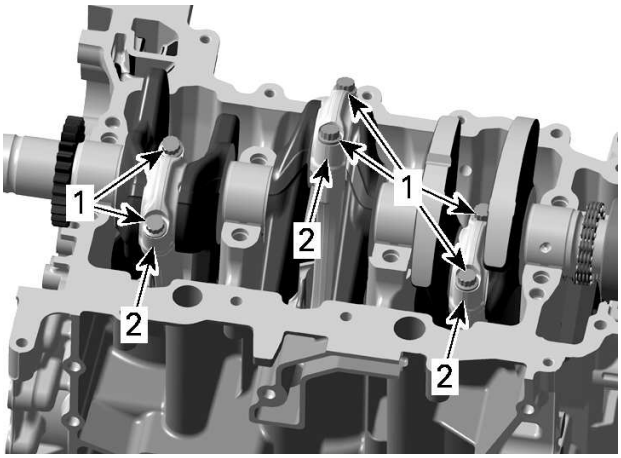


*1. Connecting rod screws*
*2. Connecting rod cap*

3. Remove *Crankshaft* as per procedure in this subsection.
4. Turn cylinder block and push piston with connecting rod out of the cylinder.

### *Disassembling the Piston and Connecting Rod*

1. Remove one piston pin circlip and discard it.

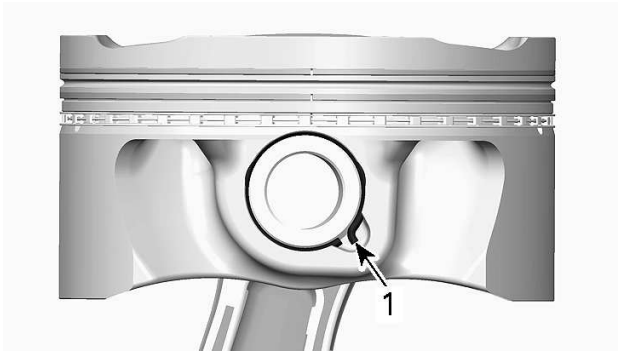


***TYPICAL***
*1. Piston pin circlip*

**NOTE:** The removal of both piston pin circlips is not necessary to remove the piston pin.

2. Push piston pin out of the piston.

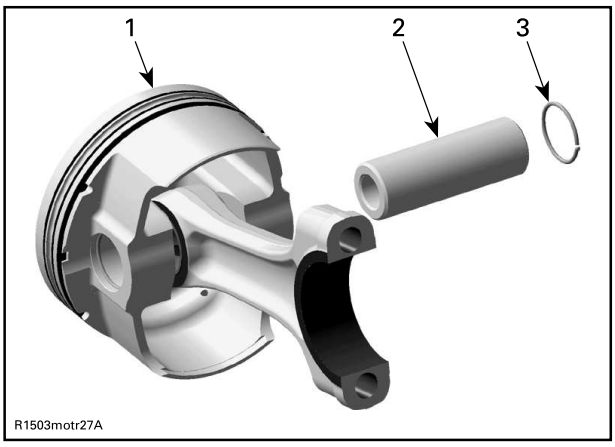


***TYPICAL***
*1. Piston*
*2. Piston pin*
*3. Circlip*

3. Detach piston from connecting rod.

### *Inspecting the Connecting Rod*

### *Connecting Rod Big End Axial Play*

1. Using a feeler gauge, measure distance between butting face of connecting rod and crankshaft counterweight. If the distance exceeds specified tolerance, replace the worn part.

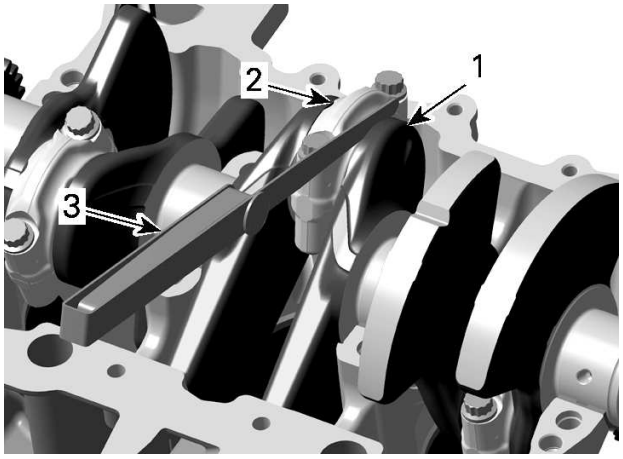


*1. Crankshaft*
*2. Connecting rod*
*3. Feeler gauge*

| Connecting Rod Big End Axial Play | |
|---|---|
| New | 0.100 to 0.352 mm (.004 to .014 in) |
| Service limit | 0.450 mm (.018 in) |

### *Connecting Rod Small End Radial Play*

1. Measure connecting rod small end, using a bore gauge.

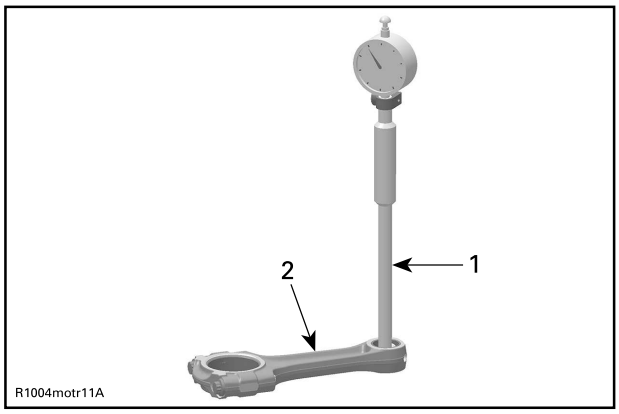


***TYPICAL***
*1. Bore gauge*
*2. Connecting rod*

| Connecting Rod Small End Diameter | | |
|---|---|---|
| 900 ACE | New | 17.010 to 17.020 mm (.6697 to .6701 in) |
| | Service limit | 17.060 mm (.6717 in) |

2. If the connecting rod small end diameter is out of specification, replace the connecting rod.
3. To obtain the radial play, calculate the difference between the piston pin diameter (*Inspecting the Piston Pin*) and the connecting rod small end inner diameter.

| Connecting Rod Small End Radial Play | |
|---|---|
| Service limit | 0.040 mm (.0016 in) |

### *Connecting Rod Big End Radial Play*

1. Measure inside diameter of connecting rod big end.

| Connecting Rod Big End Diameter | |
|---|---|
| Service limit | 36.06 mm (1.4197 in) |

1. Install the OLD plain bearings as they were mounted initially.
2. Perform the tightening procedure as described in *Installing Piston and Connecting Rod* in this subsection.

**NOTE:** To measure the connecting rod big end diameter, ALWAYS use the OLD connecting rod screws.

3. Measure inside diameter in longitudinal direction of the connecting rod.

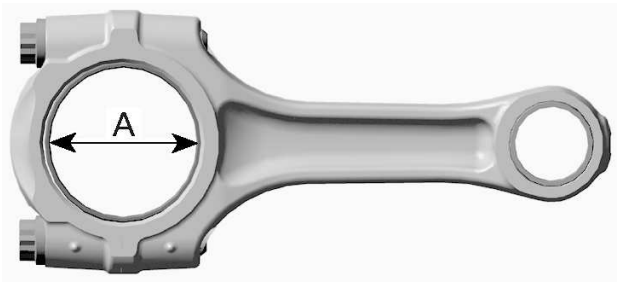


***TYPICAL***
*i. Connecting rod big end bearing*

2. To obtain the connecting rod big end radial play, calculate the difference between the big end diameter and the crankshaft pin diameter (see *Inspecting the Crankshaft* in this subsection).

| Connecting Rod Big End Radial Play | |
|---|---|
| Service limit | 0.080 mm (.0031 in) |

3. If connecting rod big end diameter is out of specification, install NEW plain bearings.

### *Inspecting the Piston Pin*

1. Using synthetic abrasive woven, clean piston pin from deposits.
2. Inspect piston pin for scoring, cracks or other damage.
3. Measure piston pin diameter, using a micrometer. See the following illustration for the proper measurement position.

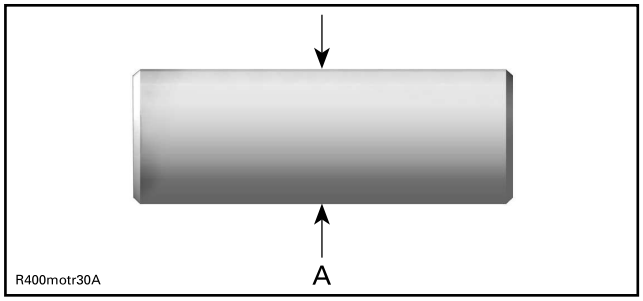


***TYPICAL***
*A. Measure piston pin diameter here*

| Piston Pin Diameter | | |
|---|---|---|
| 900 ACE | New | 16.996 to 17.000 mm (.6691 to .6693 in) |
| | Service limit | 16.986 mm (.6687 in) |

4. Replace piston pin if out of specification.

### *Inspecting the Piston*

1. Inspect piston for scoring, scuffing, cracks or other damage. Replace piston and piston rings if necessary.
2. Using a micrometer, measure piston perpendicularly (90°) to piston pin axis at 8.5 mm (11/32 in) from the skirt edge.

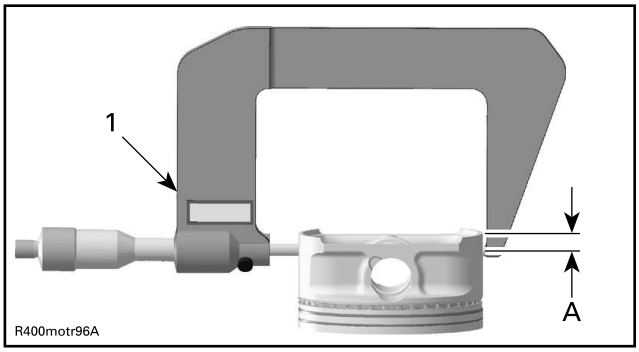


***TYPICAL***
*1. Measuring perpendicularly (90°) to piston pin axis*
*A. 8.5 mm (11/32 in)*

| Piston Measurement | |
|---|---|
| New | 73.950 to 73.966 mm (2.9114 to 2.912 in) |
| Service limit | 73.920 mm (2.9102 in) |

3. Replace piston if out of specification.

### *Piston/Cylinder Clearance*

1. Adjust and lock a micrometer to the piston dimension.

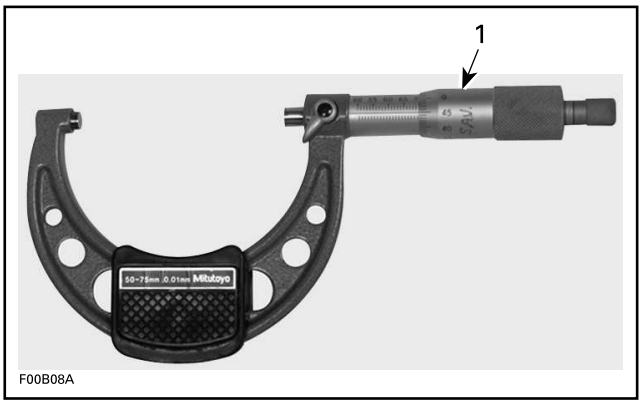


***TYPICAL***
*1. Micrometer set to the piston dimension*

**NOTE:** Make sure used piston is not worn.

2. With the micrometer locked at step 1, adjust a cylinder bore gauge to the micrometer dimension and set the indicator to 0 (zero).

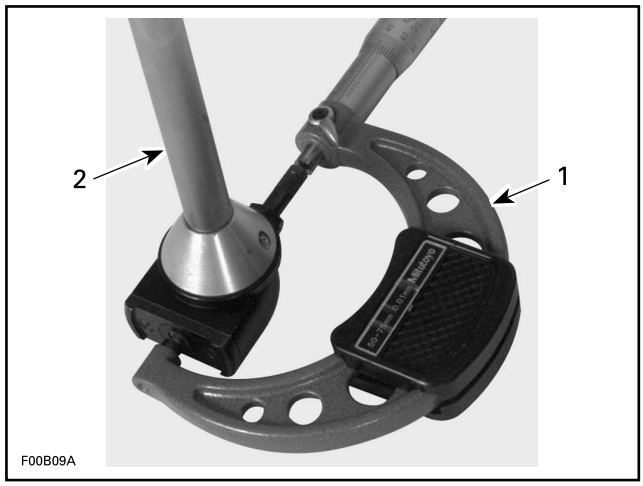


***TYPICAL***
*1. Use the micrometer to set the cylinder bore gauge*
*2. Cylinder bore gauge*

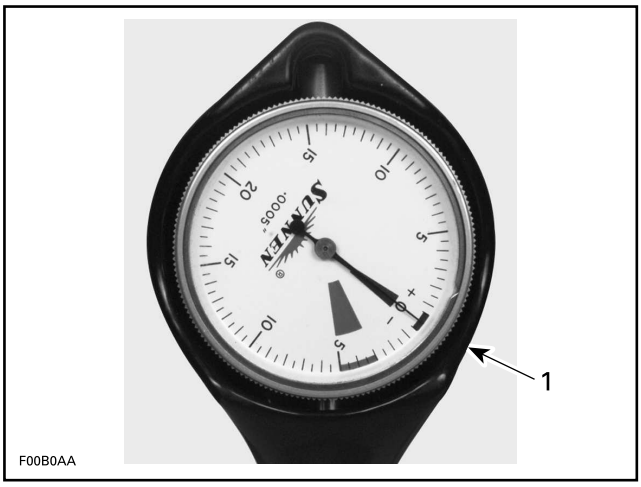


*TYPICAL*
*1. Indicator set to 0 (zero)*

**NOTE:** Make sure the cylinder bore gauge indicator is set exactly at the same position as with the micrometer, otherwise the reading will be false.

3. Position the cylinder bore gauge 35 mm (1-3/8 in) below the cylinder head mating surface, measuring perpendicularly (90°) to piston pin axis.
4. Read measurement on cylinder bore gauge. The result is the exact piston/cylinder clearance.

| Piston/Cylinder Clearance | |
|---|---|
| New | 0.037 to 0.067 mm (.0015 to .0026 in) |
| Service limit | 0.080 mm (.0031 in) |

5. If clearance exceeds specified tolerance, replace piston and repeat measurement procedure.

### *Assembling Piston and Connecting Rod*

The assembly is the reverse of the disassembly procedure. However, pay attention to the following.

1. Apply engine oil on piston pin.
2. Insert piston pin into piston and connecting rod.

**NOTE:** Ensure to reinstall all parts in their original position as marked during removal.

3. Install **NEW** piston pin circlip(s).

| **Piston circlip installer (900 ACE) (P/N 529036207)** |  |
|---|---|

**NOTICE**

**Always replace removed piston pin circlips by NEW ones.**

**NOTICE**

**If piston pin circlip installation fails, repeat step 3 by using a NEW circlip.**

1. Place the circlip in the sleeve and push piston circlip installer handle until circlip reaches the mid position in the sleeve.

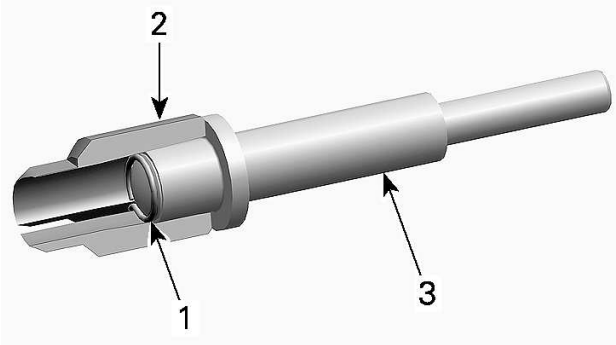


*TYPICAL*
*i. Circlip*
*ii. Sleeve*
*iii. Installer handle*

2. Put the distance sleeve on the installer handle.
3. Push piston circlip installer handle until distance sleeve makes contact with the sleeve.

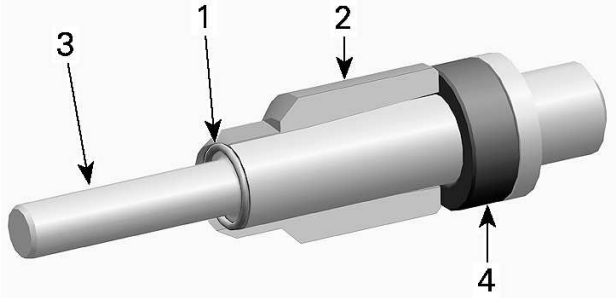


*i. Circlip*
*ii. Sleeve*
*iii. Installer handle*
*iv. Distance sleeve*

4. Remove distance sleeve and insert installer handle into the sleeve.

5. Insert the end of the handle into the piston pin, then push to engage the circlip into the piston groove.

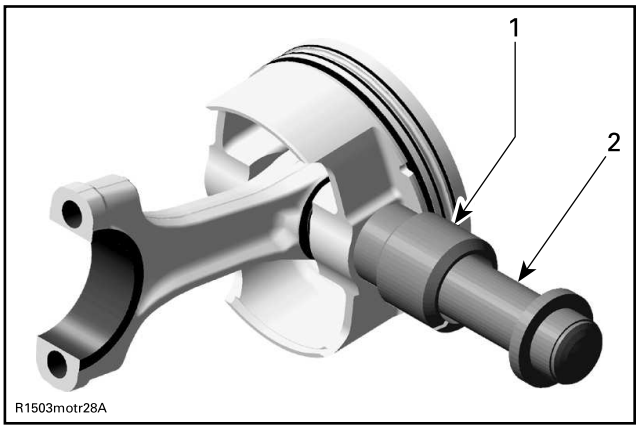


*TYPICAL*
*i. Sleeve with piston circlip inside*
*ii. Piston clip installer handle*

**NOTE:** Ensure the hook of the piston pin circlip is properly positioned.

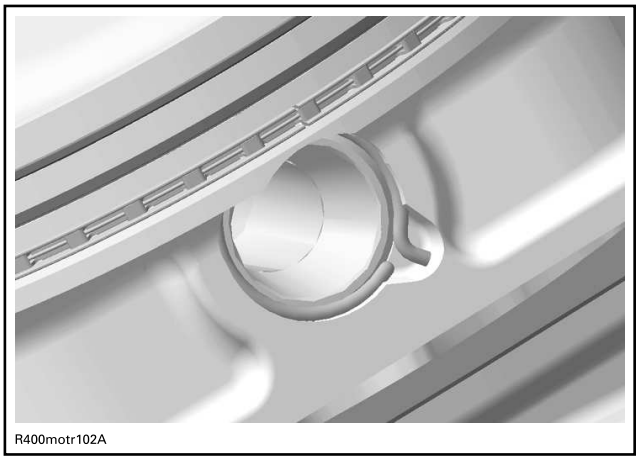


***TYPICAL - CORRECT POSITION OF THE PISTON PIN CIRCLIP***

4. Correctly install plain bearings and carefully clean split surface on both sides (cracked area) with compressed air.

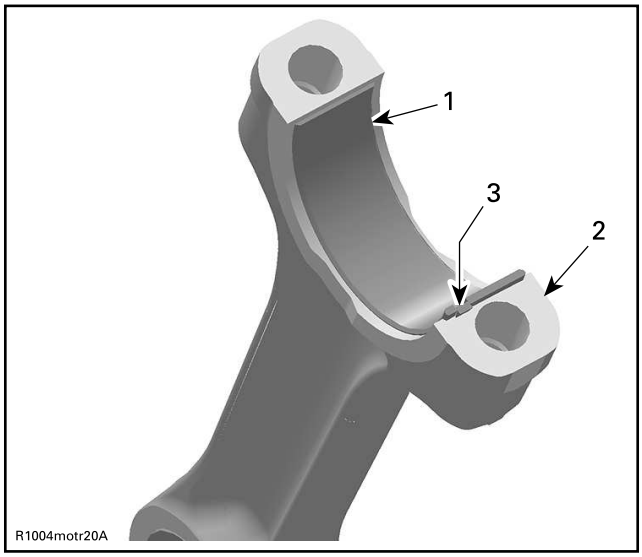


*TTYPICAL*
*1. Half bearing of connecting rod big end*
*2. Split surface of the connecting rod*
*3. Protrusion of bearing in line with connecting rod groove*

**NOTICE**

**The arrow on top of the piston and the punched marks on the connecting rods must always point towards exhaust.**

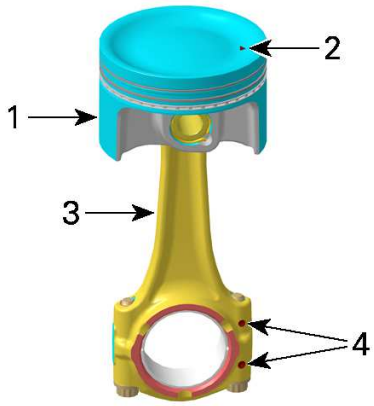


*TYPICAL*
*1. Piston*
*2. Arrow on top*
*3. Connecting rod*
*4. Punched marks*

### *Installing the Piston and Connecting Rod*

1. Use engine oil and lubricate:
   - Piston
   - Piston rings
   - Cylinder bore
   - Connecting rod bearings.
2. Slide piston into cylinder bore. Pay attention to the following.

| | |
|---|---|
| **Piston ring compressor (P/N 529036208)** |  |

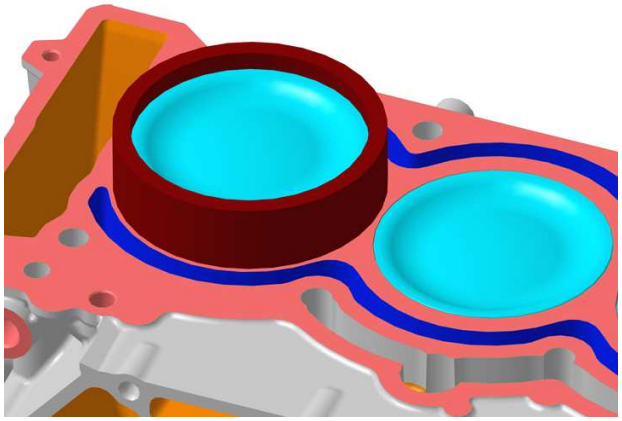

*TYPICAL*

**NOTICE**

**Piston installed with the arrow in the wrong direction would cause serious engine damage.**

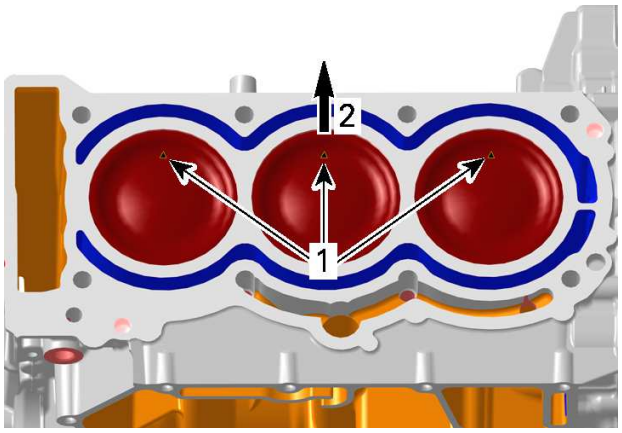


1. *Arrows*
2. *Exhaust*

1. If reused, install piston in its original bore.
2. Make sure piston rings are properly spaced.

**NOTICE**

**The ring gaps of both compression rings should always be 180° from each other and 90° from the arrow on top of the piston.**

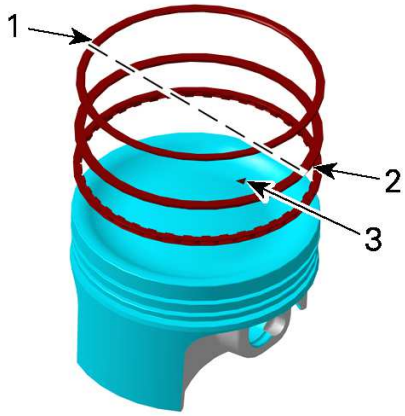


***TYPICAL - RING GAPS AT 180° FROM EACH OTHER AND 90° FORM ARROW***

*i. Rectangular ring - ring gap*
*ii. Taper-face ring - ring gap*
*iii. Arrow*

3. The arrow on top of the piston must point towards exhaust.
3. Turn cylinder block upside down.
4. Install *Crankshaft* as per procedure in this subsection.
5. Oil crankshaft pin.
6. Install connecting rod caps.

**NOTE:** Printed marks on connecting rod and cap must point together.

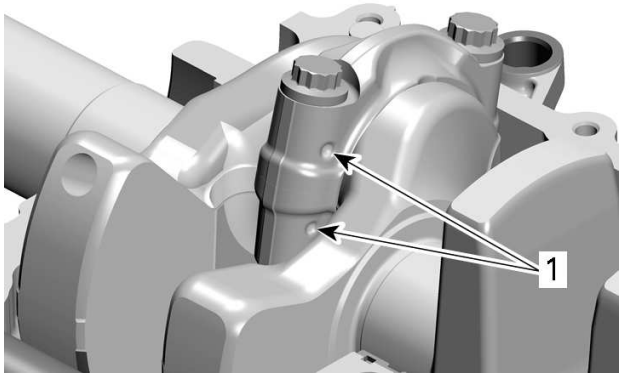


***TYPICAL***
*1. Printed marks*

**NOTICE**

**This assembly uses stretch screws. Always use NEW screws and strictly adhere to the tightening procedure.**

7. Tighten connecting rod screws as follows:

**NOTICE**

**Failure to strictly follow this procedure may cause screws to loosen and lead to severe engine damage.**

1. Torque both connecting rod screws of a connecting rod.

| Tightening Procedure | | |
|---|---|---|
| Connecting rod screws | Step A | 12 ± 2 Nm (106 ± 18 lbf-in) |

2. Use a torque angle gauge to carry out the second step.

| Tightening Procedure | | |
|---|---|---|
| Connecting rod screws | Step B | Additional 70° ± 5° |

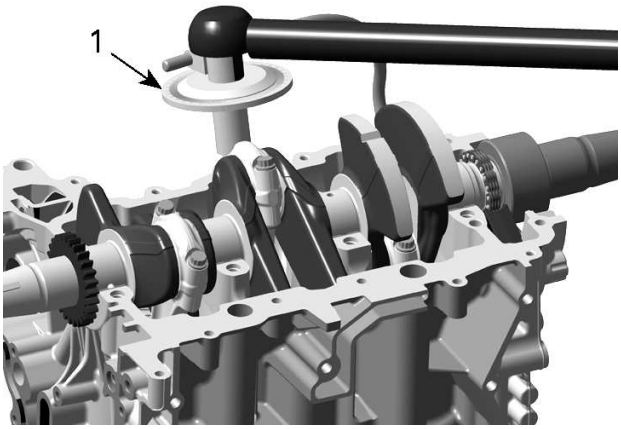


*TYPICAL*

8. Install all other removed parts.

### *Piston Rings*

#### *Removing the Piston Rings*

1. Remove piston. Refer to procedure in this subsection.
2. Remove rings from piston.

#### *Inspecting the Piston Rings*

#### *Ring/Piston Groove Clearance*

1. Using a feeler gauge measure each ring/piston groove clearance.



| Ring/Piston Groove Clearance | |
|---|---|
| Upper Compression Ring | |
| New | 0.030 to 0.066 mm (.0012 to .0026 in) |
| Service limit | 0.120 mm (.0047 in) |
| Lower Compression Ring | |
| New | 0.020 to 0.056 mm (.0008 to .0022 in) |
| Service limit | 0.120 mm (.0047 in) |
| Oil Scraper Ring | |
| New | 0.010 to 0.040 mm (.0004 to .0016 in) |
| Service limit | 0.150 mm (.0059 in) |

2. If clearance is out of specification, the piston and rings must be replaced.

#### *Ring End Gap*

1. Place piston ring in cylinder bore between 8 to 16 mm (5/16 to 5/8 in) from the top of cylinder.
   1. Use a piston as a pusher in order to correctly position the ring in the cylinder bore
2. Using a feeler gauge, check ring end gap.

| Ring End Gap | |
|---|---|
| Upper Compression Ring | |
| New | 0.20 to 0.35 mm (.008 to .014 in) |

| | |
|---|---|
| Service limit | 1.20 mm (.047 in) |
| Lower Compression Ring | |
| New | 0.30 to 0.50 mm (.012 to .02 in) |
| Service limit | 1.20 mm (.047 in) |
| Oil Scraper Ring | |
| New | 0.20 to 0.70 mm (.008 to .028 in) |
| Service limit | 1.20 mm (.047 in) |

3. If ring end gap is out of specification, replace piston rings.

### *Installing the Piston Rings*

1. Install piston rings in the following order.

**NOTE:** Use a ring expander to prevent breakage during installation. The oil ring must be installed by hand.

1. Install oil scraper ring.
2. Install the lower compression ring with the letter “N” facing up.
3. Install upper compression ring with the letter “N” facing up.

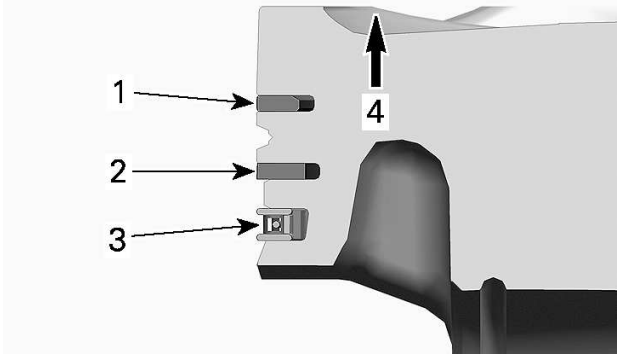


***TYPICAL***

*i. Rectangular ring*
*ii. Taper-face ring*
*iii. Oil scraper ring*
*iv. Letter “N” facing up*

**NOTICE**

**Ensure that upper and lower compression rings are not interchanged.**

2. Ensure rings rotate smoothly after installation.

# Cylinder Block - GEN2

## SERVICE TOOLS

| Description | Part Number | Page |
|---|---|---|
| CRANKSHAFT LOCKING TOOL | (P/N 529036272) | 287 |
| FLUKE 115 MULTIMETER | (P/N 529035868) | 276 |
| OIL SEAL/BEARING PUSHER | (P/N 529036284) | 278–279 |
| PISTON CIRCLIP INSTALLER | (P/N 529036426) | 294 |
| PISTON RING COMPRESSOR | (P/N 529036208) | 295 |

## SERVICE PRODUCTS

| Description | Part Number | Page |
|---|---|---|
| LOCTITE 243 (BLUE) | | 277, 279 |
| LOCTITE 5910 | | 284 |
| LOCTITE CHISEL (GASKET REMOVER) | | 282 |
| SUPER LUBE GREASE | | 278 |

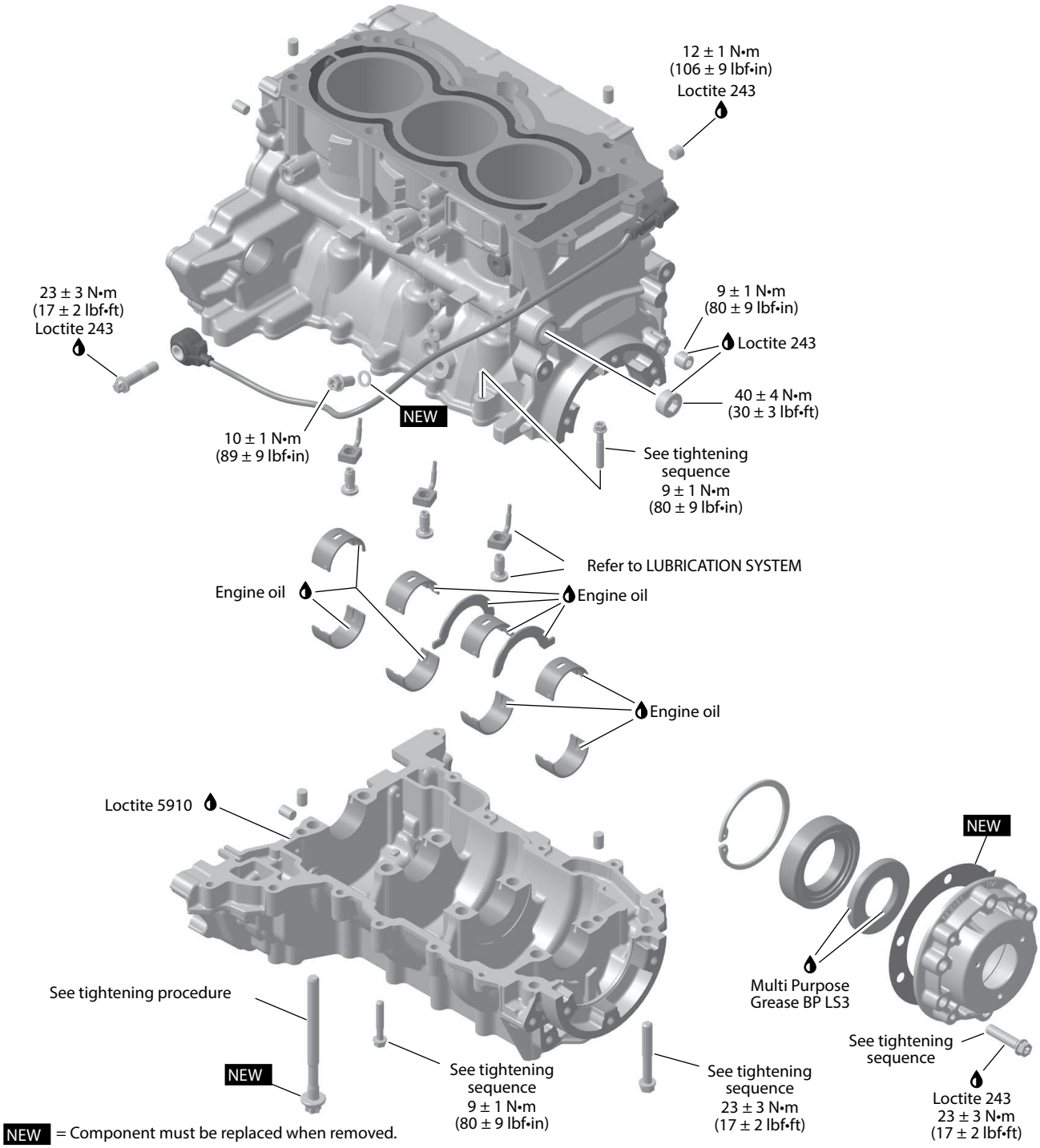


NEW = Component must be replaced when removed.

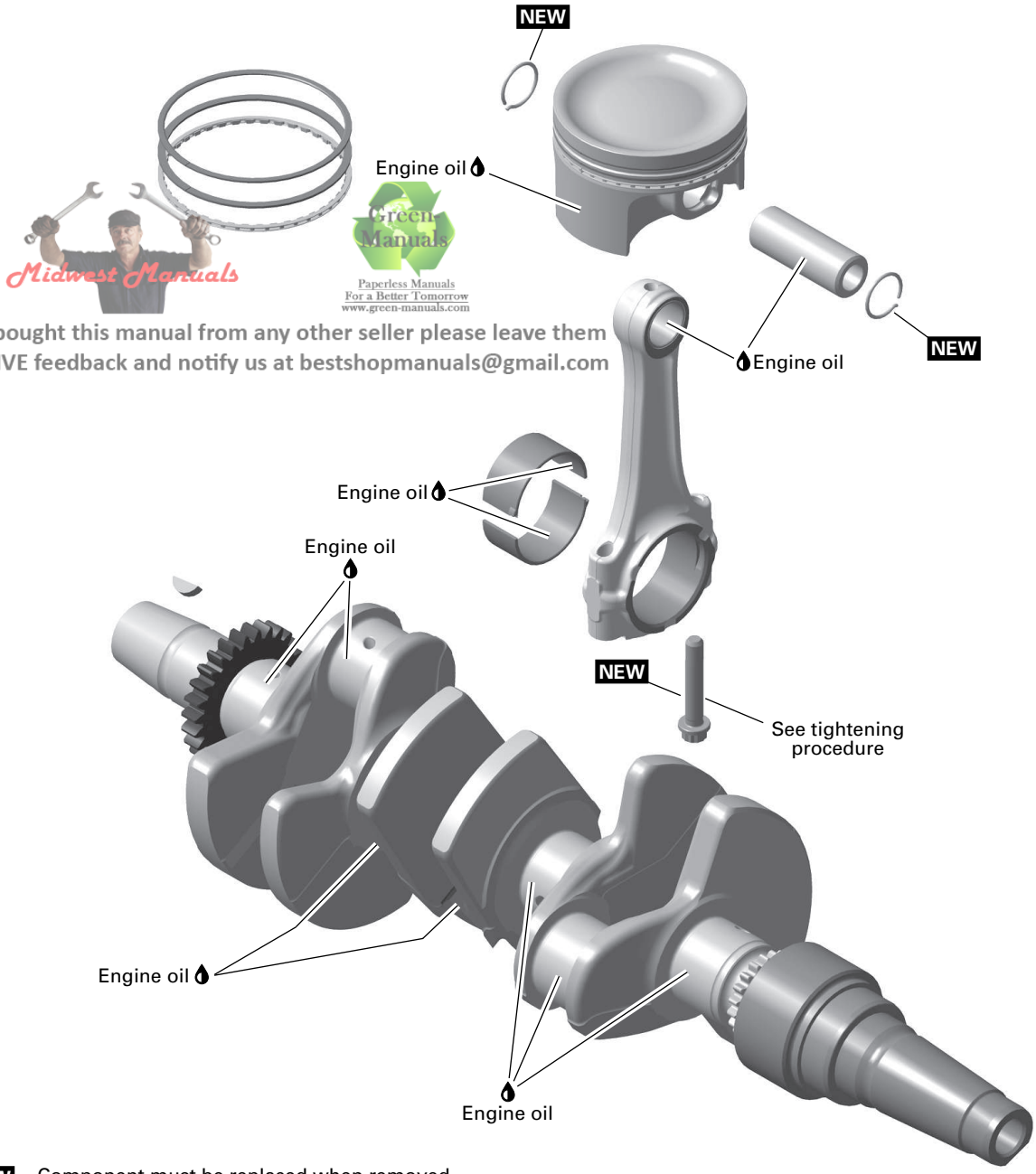


Midwest Manuals
Green Manuals
Paperless Manuals
For a Better Tomorrow
www.green-manuals.com
If you bought this manual from any other seller please leave them
NEGATIVE feedback and notify us at bestshopmanuals@gmail.com

**NEW** = Component must be replaced when removed.

## General

This section refers to the following ECM:

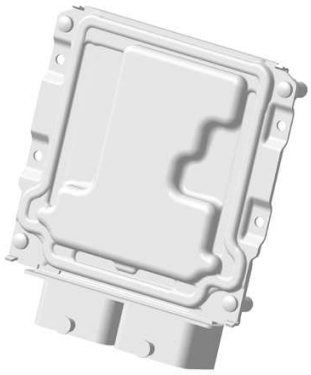

*ECM GEN2 – XCU*

**NOTE:** For a better understanding, some illustrations are taken with engine out of the vehicle.

Disconnect the battery before working on the engine.

**NOTICE**

**Always disconnect BLACK (-) cable first and reconnect last.**

During the assembly or the installation, use the torque values and service products as in the exploded views.

Clean threads before applying a threadlocker. Refer to *Self-Locking Fasteners* and *Loctite Application* at the beginning of this manual for complete procedure.

**⚠ WARNING**

**Torque wrench tightening specifications must be strictly adhered to.**
**Locking devices when removed (e.g.: locking tabs, cotter pin, etc.) must be replaced.**

**NOTICE**

**Hoses, cables or locking ties removed during a procedure must be reinstalled as per factory standards.**

When disassembling parts that are duplicated in the engine, (e. g.: valves, springs, etc.), it is strongly recommended to note their position and to keep the parts of the same assembly as a "group". If you find a defective component, it will be much easier to find the cause of the failure. Since parts were break-in together during the engine operation, they will keep their matched fit when parts are reassemble together within their "group".

## Troubleshooting

Always check for fault codes. If a fault code is detected, service the fault code first. Refer to *Diagnostic and fault codes* subsection.

### *Troubleshooting*

**1. Unusual Engine Noise or Vibrations**

Heavy wear on plain bearings.

– *Check radial play of plain bearings. Replace if out of specification.*

Crankshaft axial play out of specification.

– *Measure crankshaft axial play. If crankshaft axial play is out of specification, replace thrust washers.*

Connecting rod axial play out of specification.

– *Measure connecting rod axial play on crankshaft. Replace connecting rod or crankshaft if out of specification.*

Connecting rod screws got loose.

– *Replace damaged components and retighten screws with the recommended torque.*

Crankshaft PTO roller bearing is worn.

– *Remove PTO cover and check roller bearing for excessive play. Replace roller bearing if necessary.*

**2. Blue Smoke in the Exhaust**

Oil scraper rings worn out.

– *Replace piston rings.*

**3. Engine Suddenly Turns Off (Poor Idling)**

Piston rings worn out.

– *Replace piston rings.*

Piston/cylinder clearance out of specification.

– *Check piston/cylinder clearance. Replace if out of specification.*

Melted or broken piston.

– *Replace piston and cylinder block if necessary.*

## Procedures

### *Knock Sensor (KS)*

This engine is equipped with one knock sensor (KS) that measures the amount of noise generated by the engine.

If an abnormally high amount of noise is measured, the ECM perceives this as a KNOCK condition and adjusts ignition timing by retarding it to correct the situation.

### *Knock Sensor Location*

The knock sensor (KS) is located on the cylinder block behind the turbocharger.

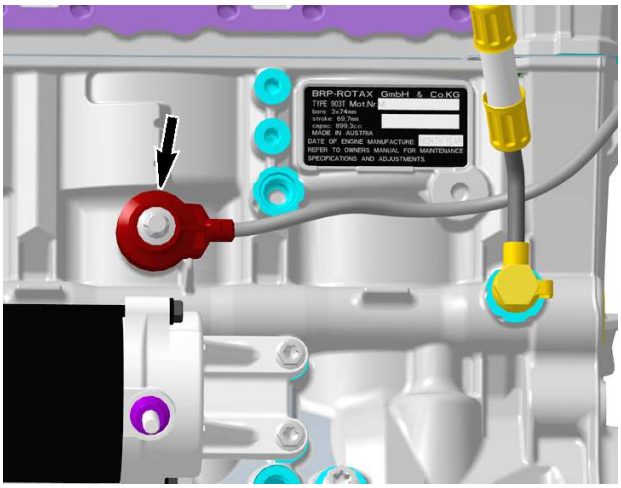

*ENGINE - EXHAUST SIDE, PARTS REMOVED FOR CLARITY*

### *Knock Sensor Troubleshooting*

Always use the BRP diagnostic software (BUDS2) to check for a knock sensor related fault code and carry out service actions.

Knock sensor problems may be related to, but not limited to any of the following items:

- Loose or improperly torqued knock sensor
- Dirty or corroded mounting surface
- Cracked knock sensor from over torquing
- Bad wiring and connections
- An induced knock (or vibration) due to a loose part external to the engine.

### *Testing the Knock Sensor (KS)*

### *Testing KS Operation (Dynamic Test)*

1. Using BUDS2 to check for a knock sensor fault. If an occurred fault is present, reset the fault.
2. Disconnect vehicle from BUDS2 and make vehicle ready for a test ride.
3. During test ride, perform several accelerations under load and ensure engine RPM exceeds 4000 RPM.
4. After test ride, reconnect vehicle to BUDS2 and look for a knock sensor fault code.
5. If no fault code occurs, the knock sensor is good.
6. If a fault occurs, do the following:
   - Refer to *Knock Sensor Troubleshooting* and check for any of the problems listed. Repair as required.
   - Carry out a knock sensor resistance test.

### *Testing the KS Resistance at the ECM*

1. Disconnect the ECM-13 connector and install it on the ECM adapter tool.
2. Set multimeter to "Ω", measure the knock sensor circuit resistance as per following table.

| | |
|---|---|
| **Fluke 115 multimeter (P/N 529035868)** |  |

| KS Resistance Test at ECM | | |
|---|---|---|
| **ECM Adapter Pins** | | **Specification @ 20 °C (68 °F)** |
| 20 | 8 | 5 MΩ |

3. If knock sensor circuit resistance is as specified, wiring harness and sensor are good.
4. If resistance measured at ECM connector is not close to specification, refer to *Testing the KS Resistance at the Component Connector*.

### *Testing the KS Resistance at the Component Connector*

1. Remove the required parts to access the knock sensor connector.
2. Disconnect the knock sensor connector.
3. Measure the resistance between both terminals on the knock sensor and compare the measurement with the preceding table.
4. If resistance is not as specified, replace knock sensor.
5. If resistance is good at the knock sensor, carry out a continuity check of the wiring between the knock sensor connector and ECM-13 connector. Refer to applicable *wiring diagram* for details.

**NOTE:** Although the knock sensor resistance is as specified, it may still be at fault as it may not be producing a signal within its design specification.

Repair or replace wiring and connectors between the ECM and knock sensor.

### *Replacing the KS*

1. Remove the upper body module. Refer to *Body* subsection.
2. Remove the pulleys guard.
3. Cut locking tie and disconnect KS sensor connector. Refer to *Knock Sensor Access* in this subsection.

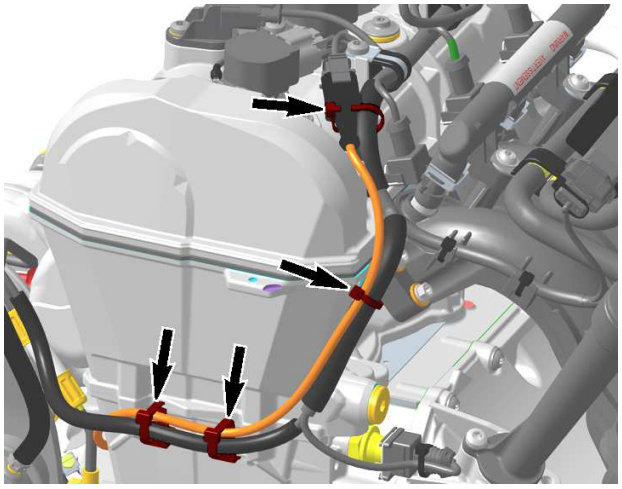

4. Cut locking ties securing wiring harness and KS cable.
5. Remove turbocharger. Refer to *Turbocharger - GEN2* subsection.
6. Remove knock sensor mounting screw.
7. Clean:
   - Knock sensor contact surface on cylinder
   - Threaded hole.
8. Install new knock sensor and tighten as specified.

| Loctite 243 (blue) |
|---|

| Tightening Torque | |
|---|---|
| Knock sensor screw | 24 ± 3 Nm (18 ± 2 lbf-ft) |

**NOTICE**

**Improper torque may prevent sensor from functioning properly and lead to severe damage of internal engine components.**

9. Ensure knock sensor connector is clean and corrosion free before connecting it.
10. Install locking ties as per factory specification.

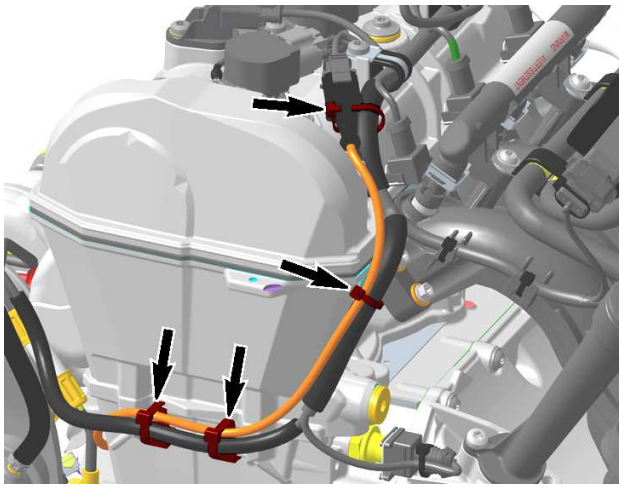

*LOCKING TIES*

11. Reinstall all remaining removed parts.

### *PTO Cover and PTO Oil Seal*

### *PTO Cover Access*

To replace the PTO oil seal, it is not necessary to remove engine from the vehicle.

Remove drive pulley. Refer to *Drive System and Brake* subsection.

### *Removing the PTO Cover*

1. Remove screws retaining the PTO cover.
2. Remove PTO cover and discard gasket.

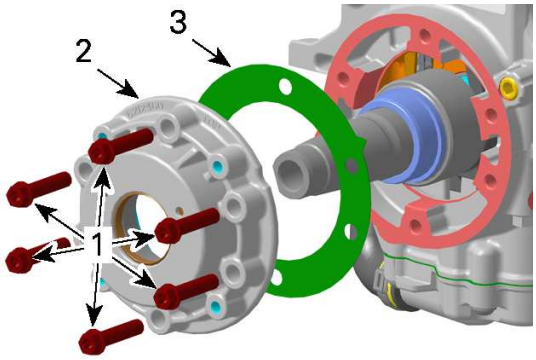


1. *PTO cover screws*
2. *PTO cover*
3. *Gasket*

### *Replacing the PTO Oil Seal and Bearing*

Always replace PTO oil seal and bearing at the same time.

### *Removing the PTO Oil Seal and Bearing*

1. Use pliers to remove inner retaining ring.

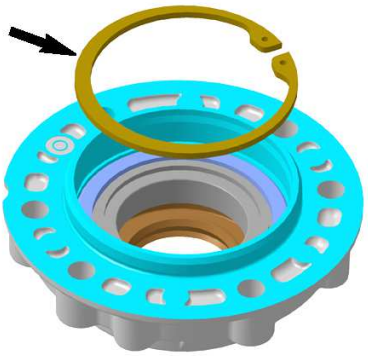

2. Heat PTO cover up to 130 °C (266 °F) before removing the bearing and oil seal.

**NOTICE**

**Clean PTO cover from oil before heating.**

3. Carefully push out oil seal and bearing.

| | |
|---|---|
| **Punch, 4 mm (.157 in)** |  |

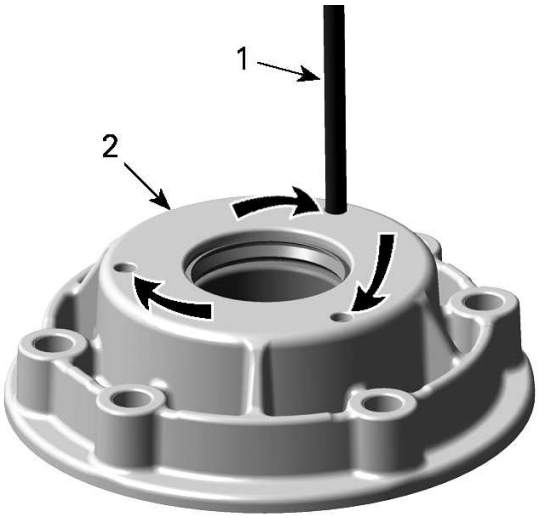


*TYPICAL - PUSH OUT CIRCULAR*
1. *Punch*
2. *PTO cover*

4. Remove and discard roller bearing and oil seal.

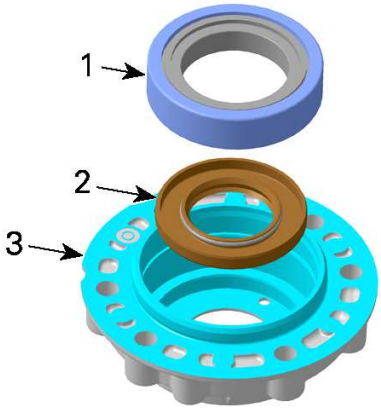


1. *Roller bearing*
2. *Oil seal*
3. *PTO cover*

### *Installing the PTO Oil Seal and Bearing*

Check the oil seal running surface of crankshaft for grooves and deposits, before installation of NEW oil seal.

1. Clean crankshaft PTO side from deposits.
2. Clean oil seal and roller bearing areas in PTO cover.
3. Lubricate oil seal outer diameter and sealing lip.

| |
|---|
| **Super Lube grease** |

4. Press **NEW** oil seal in PTO cover.

| | |
|---|---|
| **Oil seal/bearing pusher (P/N 529036284)** |  |

**NOTICE**

**Oil seal must be installed with sealing lip facing to the engine.**

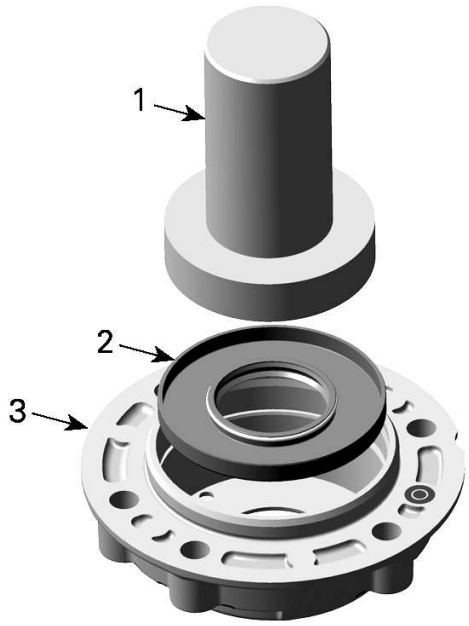


1. *Oil seal/bearing pusher*
2. *Oil seal*
3. *PTO cover*

5. Place **NEW** roller bearing in PTO cover.
6. Carefully press in the roller bearing.

| **Oil seal/bearing pusher (P/N 529036284)** |  |
|---|---|

**NOTICE**

**During installation never push on the inner race of the bearing.**

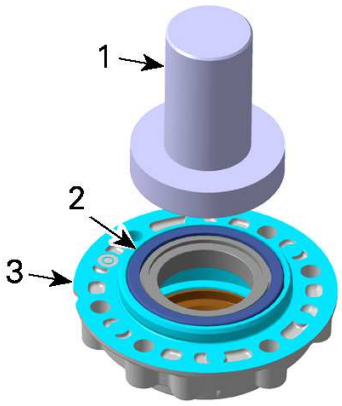


1. *Oil seal/bearing pusher*
2. *Roller bearing*
3. *PTO cover*

7. Install retaining ring.

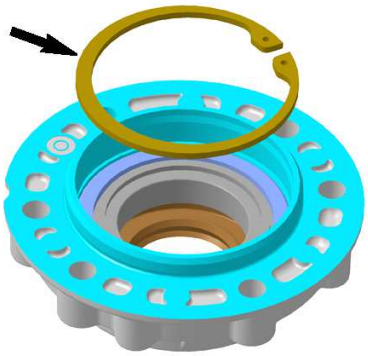

### *Installing the PTO Cover*

The installation is the reverse of the removal procedure. However, pay attention to the following.

1. Install a **NEW** PTO cover gasket in proper position.

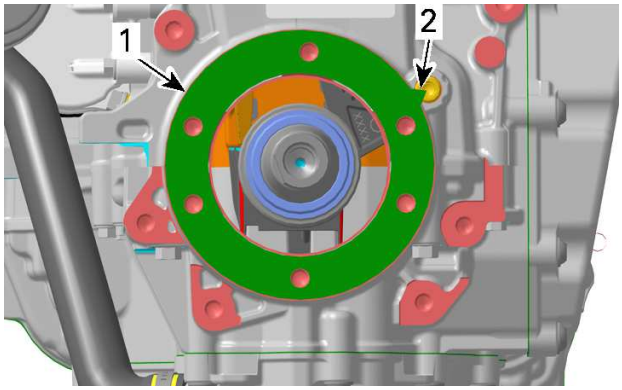


1. *Gasket*
2. *Tab*

2. Tighten PTO cover screws as per following sequence.

| **Loctite 243 (blue)** |
|---|

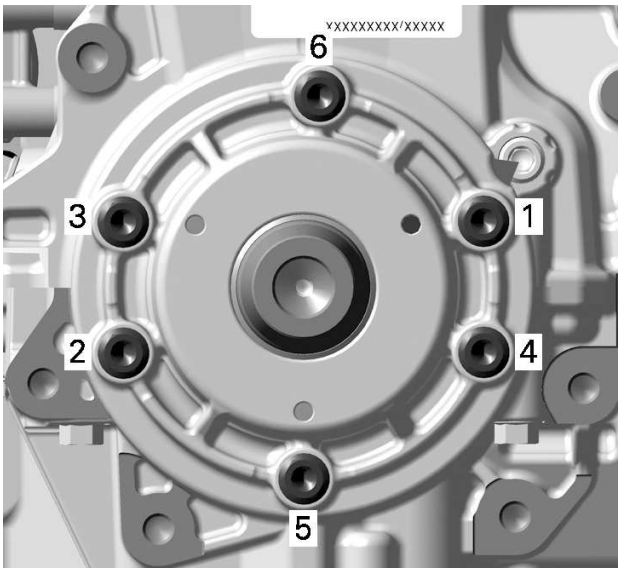


*PTO COVER TIGHTENING SEQUENCE*

| Tightening Torque | |
|---|---|
| PTO cover screws | 23 ± 3 Nm<br>(17 ± 2 lbf-ft) |

### *Cylinder Block*

#### *Disassembling the Cylinder Block*

1. Remove engine from the vehicle. Refer to *Engine Removal and Installation* subsection.
2. Drain engine oil. Refer to *Lubrication System - GEN2* subsection.
3. Refer to *Ignition Coils and Spark Plugs - GEN2* subsection and remove:
   - Ignition coils
   - Spark plugs.
4. Remove valve cover. Refer to *Cylinder Head - GEN2* subsection.
5. Lock crankshaft, refer to *Crankshaft Locking Procedure* in this subsection.
6. Remove air intake manifold. Refer to *Intake Manifold - GEN2* subsection.
7. Refer to *Cooling System - Engine Components - GEN2* subsection and remove:
   - Water pump housing
   - Thermostat
   - Water pump drive gear.
8. Refer to *Lubrication System - GEN2* subsection and remove:
   - Oil tank
   - Oil cooler
   - Oil pressure regulator
   - Oil pump drive gears and oil pumps
   - Oil sump cover
   - Oil strainers.
9. Refer to *Magneto and Starter - GEN2* subsection and remove:
   - Magneto cover
   - Rotor
   - Starter drive gears
   - Electric starter.
10. Refer to *Timing Chain* subsection and remove:
    - Timing chain tensioner
    - Timing chain guides.
11. Refer to *Cylinder Head - GEN2* subsection and remove:
    - Camshaft holders
    - Cylinder head.
12. Remove PTO cover. Refer to *PTO Cover and PTO Oil Seal* in this subsection.

**NOTE:** Before splitting the cylinder block, measure crankshaft axial play. Refer to *Crankshaft* in this subsection.

13. Remove crankshaft locking tool.
14. Remove cylinder block screws.

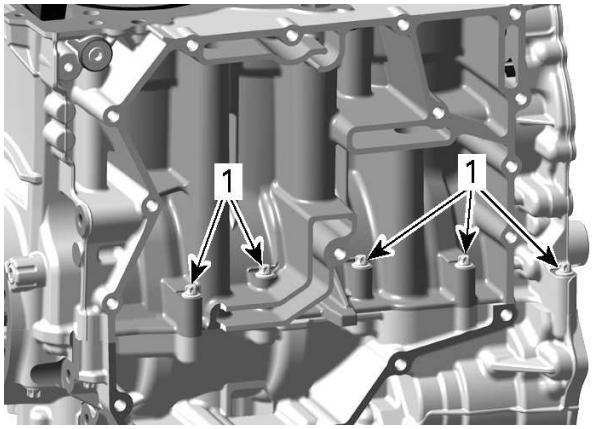


***INTAKE SIDE***
*1. Cylinder block screws (M6) screwed from top to bottom*

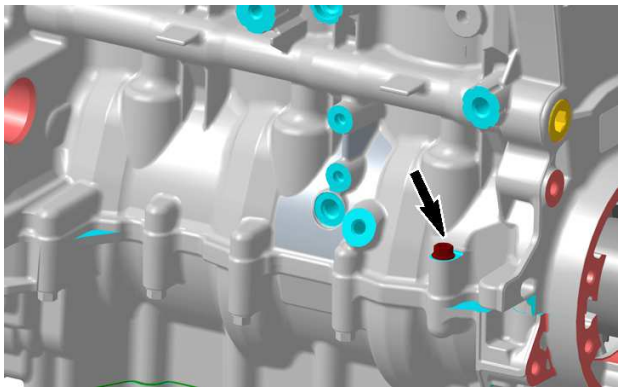

*CYLINDER BLOCK SCREW (M6) SCREWED FROM TOP TO BOTTOM - EXHAUST SIDE*

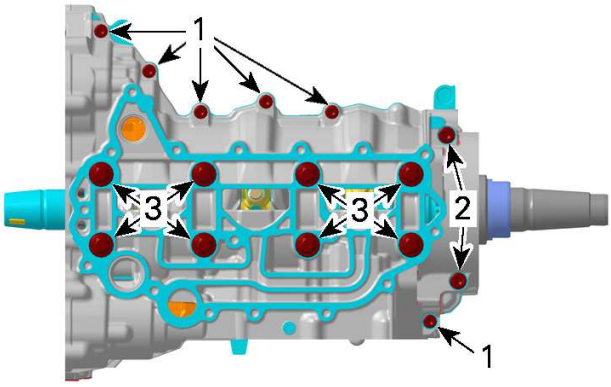


*BOTTOM SIDE*
1. *M6 screws*
2. *M8 screws*
3. *M9 screws (discard)*

1. Start removing the M6 screws.
2. Then remove the M8 screws.
3. Finally remove and discard the M9 screws.

15. Carefully remove cylinder block lower half by using a soft hammer.

**NOTE:** Take care not to damage the sealing surfaces of the cylinder block halves.

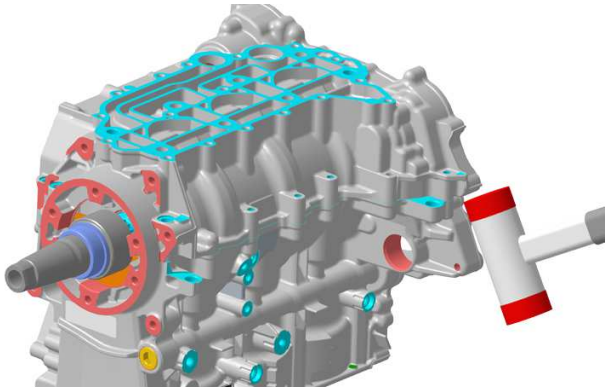

16. Remove connecting rod caps. Refer to *Pistons and Connecting Rods* in this subsection.
17. Refer to *Crankshaft* in this subsection and remove:
    - Crankshaft thrust washers
    - Crankshaft.
18. Remove pistons and connecting rods. See procedure in this subsection.

### *Removing the Plain Bearing*

When the plain bearings need to be removed from the cylinder block, mark them to identify the correct position at installation. See the illustration as an example.

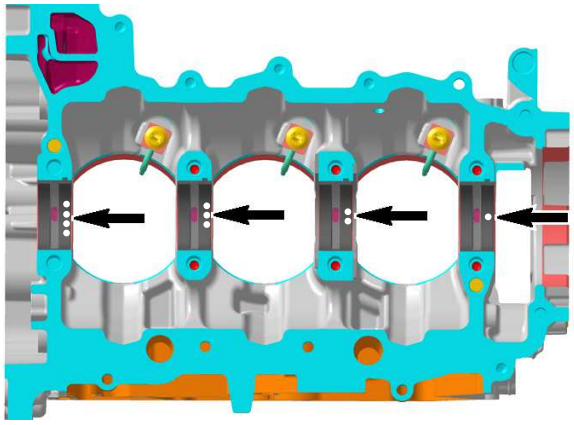

*MARKS ON CRANKSHAFT PLAIN BEARINGS*

### *Cleaning the Cylinder Block*

1. Clean cylinder block using a part cleaner, then use compressed air to dry it.
2. Blow out the oil orifices using compressed air and make sure they are not clogged.
3. Inspect oil nozzles. Refer to *Lubrication System - GEN2* subsection.

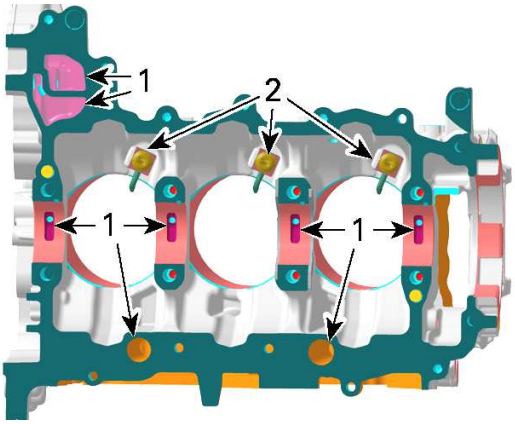


*CYLINDER BLOCK UPPER HALF*
1. *Oil orifices*
2. *Oil nozzles*

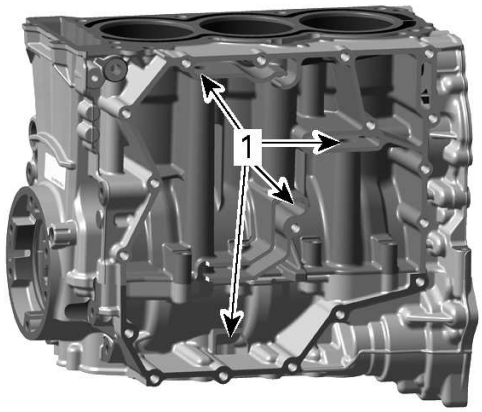


***CYLINDER BLOCK - REAR***
*1. Oil orifices*

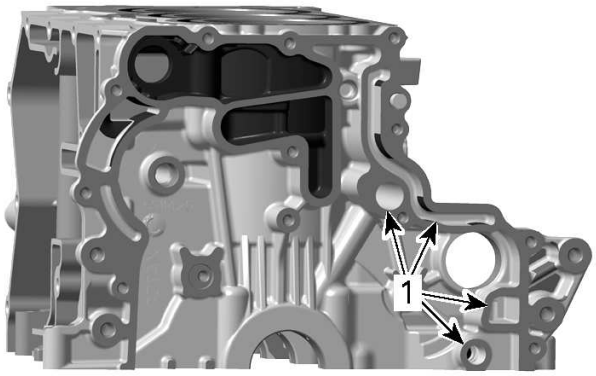


***CYLINDER BLOCK - MAG SIDE***
*1. Oil orifices*

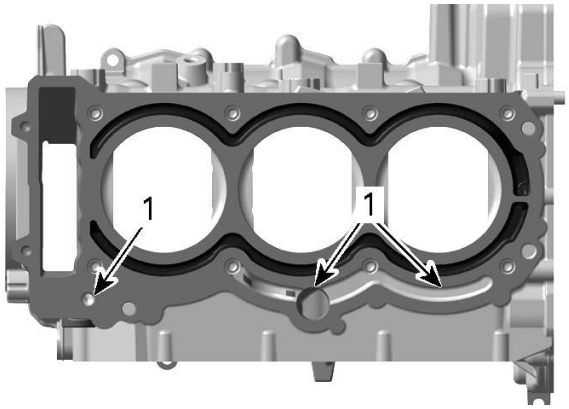


***CYLINDER BLOCK - TOP***
*1. Oil orifices*

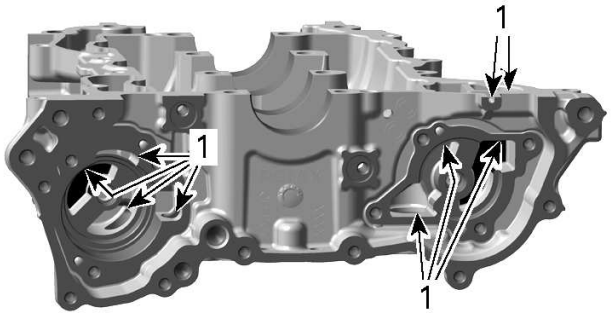


***CYLINDER BLOCK LOWER HALF***
*1. Oil orifices*

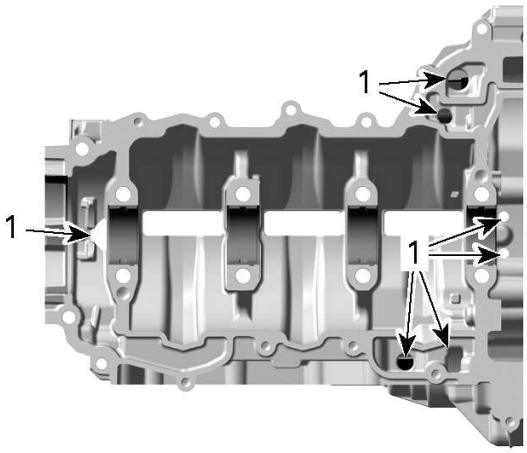


***CYLINDER BLOCK LOWER HALF***
*1. Oil orifices*

4. Clean all metal components in a solvent.
5. Clean cylinder block mating surfaces with gasket remover and a brass brush. Brush a first pass in one direction then make the final brushing perpendicularly (90°) to the first pass (cross hatch).

| **Loctite chisel (gasket remover)** |
|---|

Do not wipe with rags. Use a new clean hand towel only.

### *Inspecting the Cylinder Block*

1. Check cylinder block for cracks or other damage.
2. Check cylinder block mating surfaces for flatness using a straight edge.
3. Replace cylinder block if necessary.
4. Check cylinder bores for cracks, scoring and wear ridges on top and bottom of the cylinders.

### *Cylinder Taper*

1. Measure cylinder bore diameter at 4 recommended positions. See illustration.

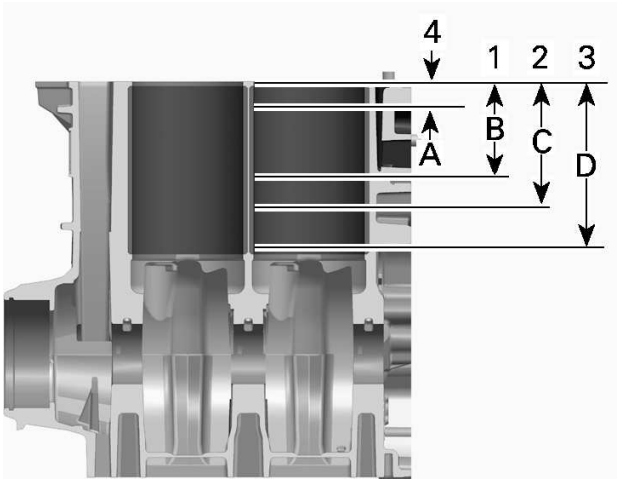


***TYPICAL***
*1. First measure*
*2. Second measure*
*3. Third measure*
*4. Fourth measure*
*A. 5 to 10 mm (.197 to .394 in)*
*B. 30 to 35 mm (1.181 to 1.378 in)*
*C. 57 to 62 mm (2.244 to 2.441 in)*
*D. 111 to 113 mm (4.37 to 4.449 in)*

The difference between measurements should not exceed the service limit mentioned in next table.

| Cylinder Taper | |
|---|---|
| New maximum | 0.030 mm (.0012 in) |
| Service limit | 0.050 mm (.002 in) |

### *Cylinder Out of Round*

1. Measure cylinder bore diameter as shown and at the same measuring points as for *Cylinder Taper*.

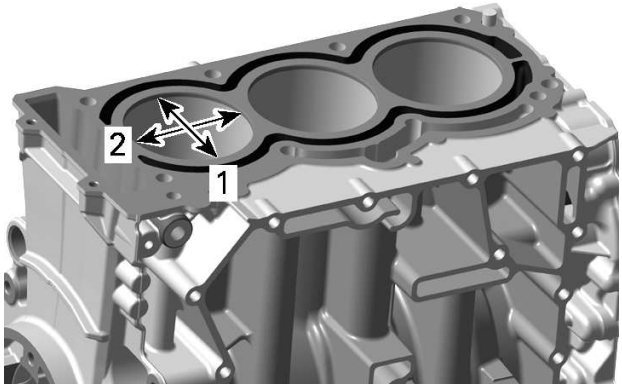


*1. Perpendicular to piston pin axis*
*2. Parallel to piston pin axis*

2. To obtain the cylinder out of round, calculate the difference between the perpendicular measures.

| Cylinder Out of Round | |
|---|---|
| New maximum | 0.008 mm (.0003 in) |
| Service limit | 0.030 mm (.0012 in) |

### *Inspecting Plain Bearings Diameter*

1. Check the plain bearings for scoring or other damages.
2. Measure plain bearing inside diameter and compare with crankshaft bearing journal diameter (refer to *Crankshaft* in this subsection). Proceed as follows.

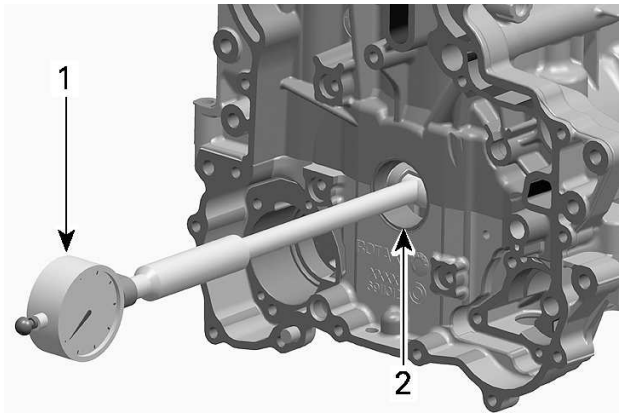


*1. Bore gauge*
*2. Crankshaft plain bearing*

| Crankshaft Plain Bearing Inside Diameter | |
|---|---|
| Service limit | 36.080 mm (1.4205 in) |

1. Use the OLD plain bearings and put both cylinder block halves together.
2. Tighten screws as described in *Assembling the Cylinder Block*.
3. Measure the inside diameter of the crankshaft plain bearings using a bore gauge.

3. Replace bearings if they are out of specifications.

### *Assembling the Cylinder Block*

The assembly is the reverse of the disassembly procedure. However, pay attention to the following.

1. Correctly reinstall plain bearings as follows.
   1. Use **NEW** bearings if diameters are out of specification. Refer to *Inspecting Plain Bearing Diameter* in this subsection.
   2. Install bearings with lubrication grooves in the cylinder block upper half.

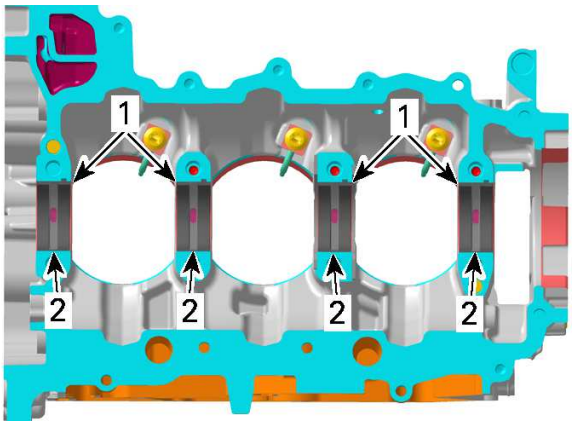


*i. Plain bearings*
*ii. Lubrication grooves*

   3. Install flat bearings in the cylinder block lower half.

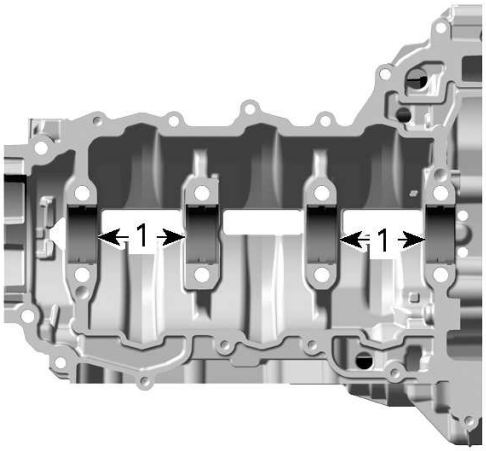


*i. Flat bearings*

**NOTICE**

**Bearings must be flush with the cylinder block split surface and their protrusions have to fit in the notched areas in the cylinder block seat.**

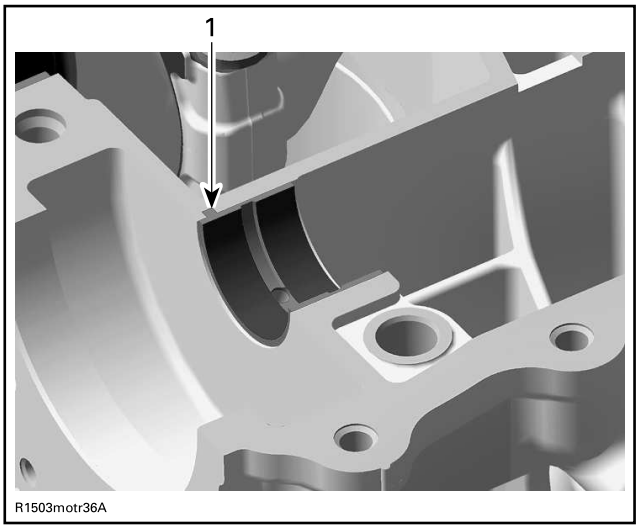


***TYPICAL***

*i. Bearing protrusion in cylinder block notch*

2. Install pistons, refer to *Pistons and Connecting Rods* in this subsection.
3. Apply engine oil on all plain bearings.
4. Install the following components:
   - Crankshaft and thrust washers (refer to *Crankshaft*)
   - Connecting rod caps (refer to *Pistons and Connecting Rods*).
5. Apply sealant on mating surface of cylinder block lower half as shown on next illustration.

**Loctite 5910**

**IMPORTANT**: When beginning the application of the cylinder block sealant, the assembly and first tightening have to be done within 12 minutes. It is suggested to have all you need on hand to save time.

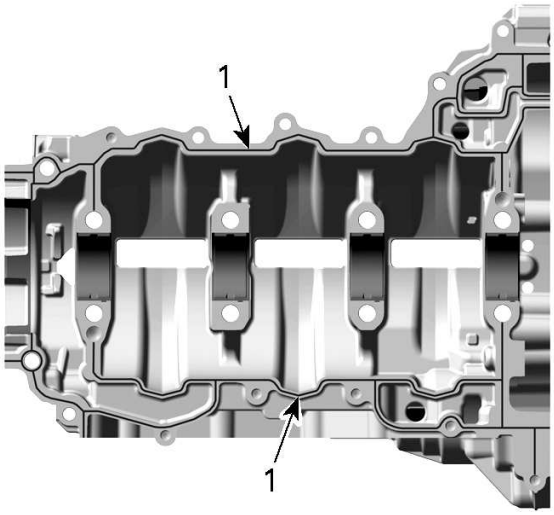


*1. Apply Loctite 5910 following this pattern*

**NOTICE**

**Ensure not to apply too much sealant, as it will spread out inside the cylinder block.**

**NOTICE**

**Take care that the bypass passage of the engine oil pressure regulator is not clogged with sealant.**

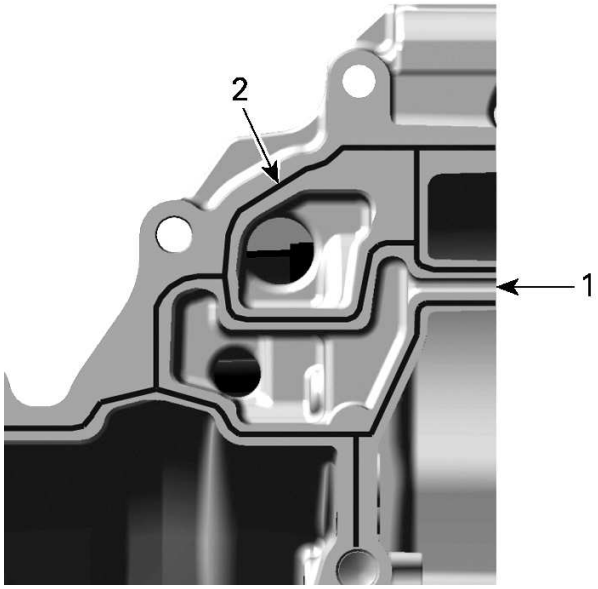


*1. Bypass passage of engine oil pressure regulator*
*2. Loctite 5910 applied*

6. Install **NEW** cylinder block M9 screws and tighten as follows.

**NOTICE**

**This assembly uses stretch screws. Always use NEW screws and strictly adhere to the tightening procedure.**

1. Torque the M9 screws according the sequence.

| Tightening Procedure | | |
|---|---|---|
| Cylinder block M9 screws | Step A | 20 ± 2 Nm (15 ± 1 lbf-ft) |

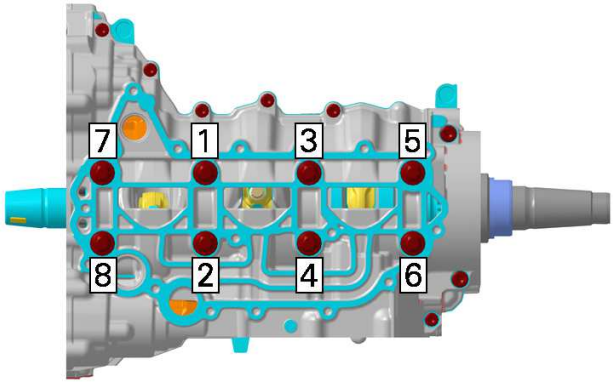


***M9 SCREWS TIGHTENING SEQUENCE - FIRST AND SECOND STEPS***

2. Use a torque angle gauge to carry out the second step, following the same sequence.

| Tightening Procedure | | |
|---|---|---|
| Cylinder block M9 screws | Step B | Additional 150° ± 5° |

7. Install M8 screws and tighten as follows.

| Tightening Torque | |
|---|---|
| Cylinder block M8 screws | 23 ± 2 Nm (17 ± 1 lbf-ft) |

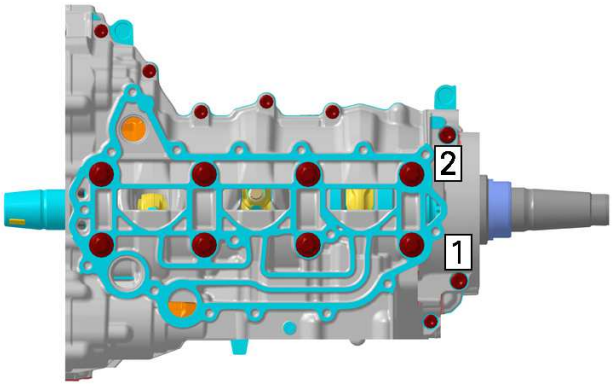


*M8 SCREWS TIGHTENING SEQUENCE*

8. Install the M6 screws and tighten as follows.

| Tightening Torque | |
|---|---|
| Cylinder block M6 screws | 9 ± 1 Nm (80 ± 9 lbf-in) |

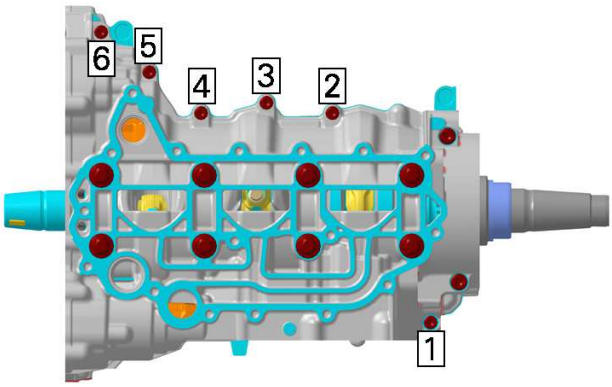


*M6 SCREWS TIGHTENING SEQUENCE (BOTTOM OF CRANKCASE)*

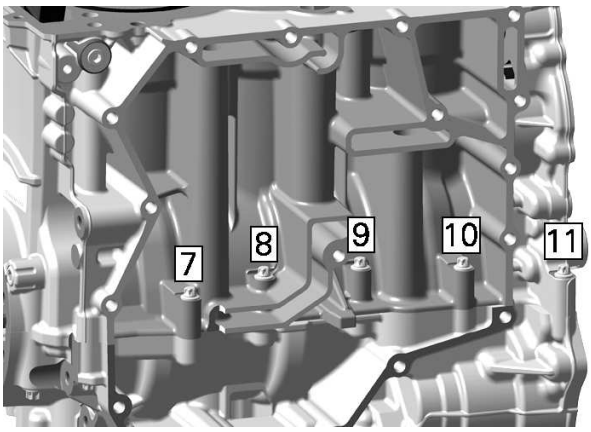


*M6 SCREWS TIGHTENING SEQUENCE (INTAKE SIDE OF CRANKCASE)*

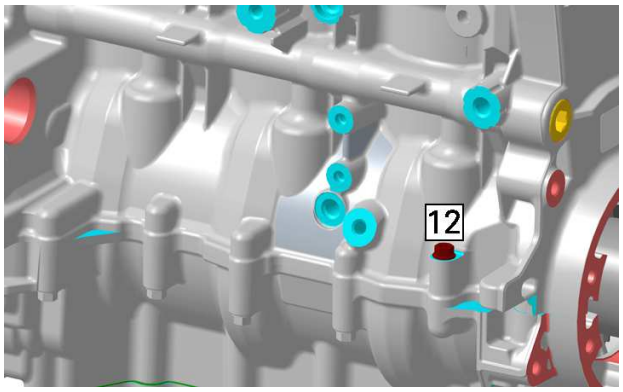


*M6 SCREW TIGHTENING SEQUENCE (EXHAUST SIDE OF CRANKCASE)*

**NOTE:** Check the crankshaft axial play before continuing the assembly. Refer to *Crankshaft* in this subsection.

9. Lubricate PTO oil seal properly before reinstalling the PTO cover. Refer to *PTO Cover and PTO Oil Seal* in this subsection.
10. Reassemble engine in accordance with the proper assembly procedures.

### *Crankshaft*

#### *Crankshaft Locking Procedure*

**NOTICE**

**When crankshaft is locked, the second cylinder is set to TDC.**

**NOTICE**

**Crankshaft must be locked whenever the magneto rotor retaining nut has to be removed or whenever working on the valve train.**

**NOTICE**

**When working on the valve train or timing chain, crankshaft must be locked with the marks "IN" and "EX" on the camshaft timing gears facing each other.**

1. If working on the valve train or timing chain, remove the valve cover. Refer to *Cylinder Head* subsection.
2. Remove spark plugs.
3. Remove crankshaft access plug and discard gasket ring.

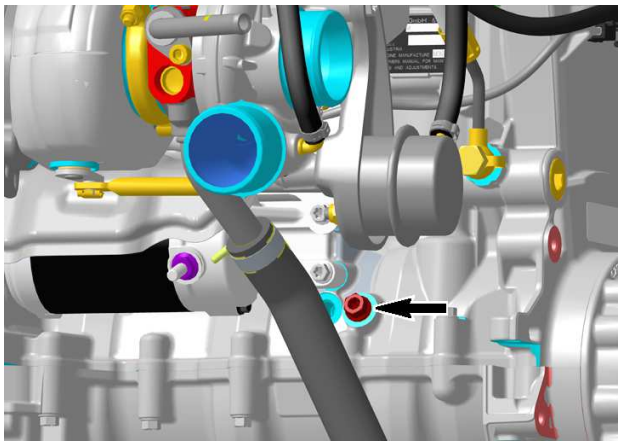

4. Turn engine on PTO side counterclockwise to bring crankshaft to locking position.

**NOTICE**

**For turning the crankshaft install drive pulley or use a suitable screw locked by a counter nut.**

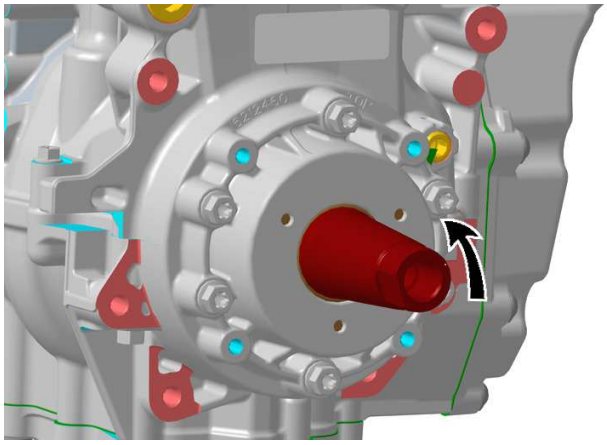

**NOTICE**

**Crankshaft locking position is reached when marks "IN" and "EX" on the camshaft timing gears face each other.**

5. Use a flashlight to check if the groove in the crankshaft is aligned with the hole.
6. Lock crankshaft.

| | |
|---|---|
| **Crankshaft locking tool (P/N 529036272)** |  |

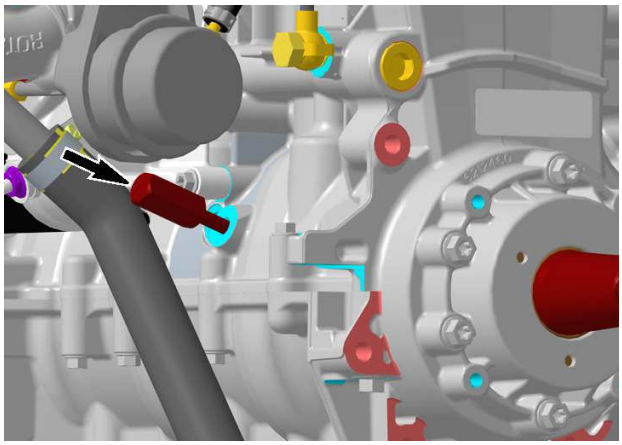

***Removing the Crankshaft***

1. Disassemble *Cylinder Block*, see procedure in this subsection.
2. Remove connecting rod caps. Refer to *Pistons and Connecting Rods* in this subsection.
3. Remove crankshaft thrust washers.

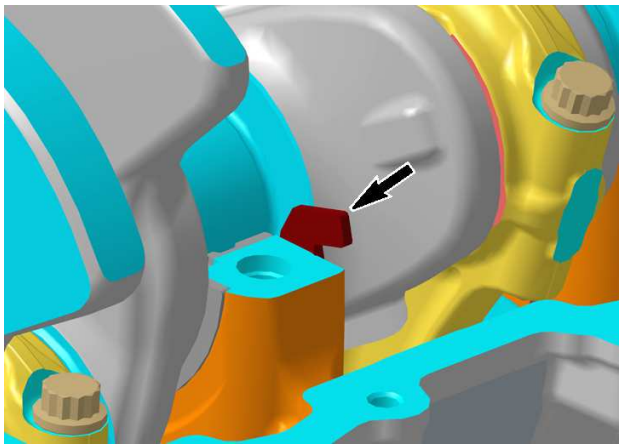

4. Remove crankshaft from cylinder block.

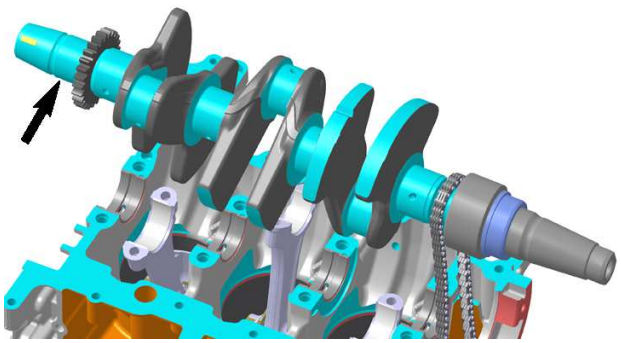

***Inspecting the Crankshaft***

1. Check each bearing journal of crankshaft for scoring, scuffing, cracks or other signs of wear.
2. Check if crankshaft gears are worn or otherwise damaged.

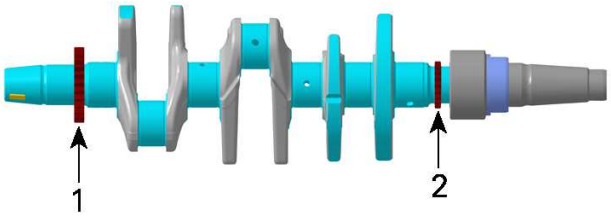


*TYPICAL*
1. *Oil pump drive gear*
2. *Crankshaft timing gear*

3. Replace crankshaft if damaged.
4. Blow the oil orifices using compressed air and make sure they are not clogged.

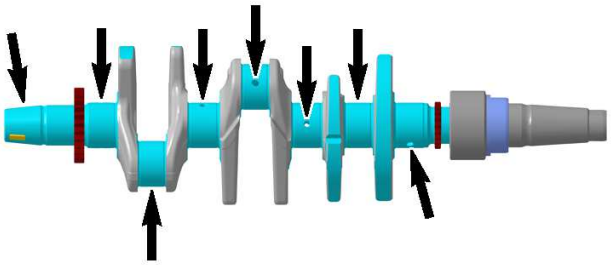

*TYPICAL*

### *Crankshaft Radial Play*

1. Measure crankshaft bearing journal diameter, using a micrometer.

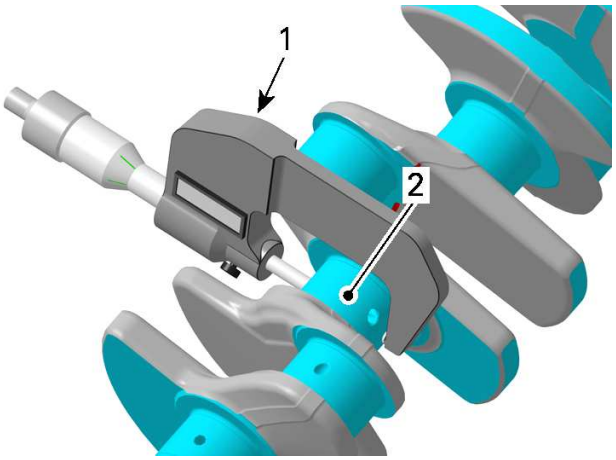


1. *Micrometer*
2. *Crankshaft area for plain bearing*

2. To obtain the radial play, calculate the difference between the bearing journal diameter and the crankshaft plain bearings inner diameter (see *Cylinder Block* in this subsection.

| Crankshaft Bearing Journal Diameter | |
|---|---|
| New | 35.990 to 36.006 mm (1.4169 to 1.4176 in) |
| Service limit | 35.960 mm (1.4157 in) |

| Crankshaft Radial Play | |
|---|---|
| Service limit | 0.08 mm (.0031 in) |

### *Crankshaft Pin Diameter*

1. Measure crankshaft pin diameter, using a micrometer.
2. To obtain the radial play, calculate the difference between the crankshaft pin diameter and the connecting rod plain bearings inner diameter (see *Inspecting the Connecting Rod* in this subsection).

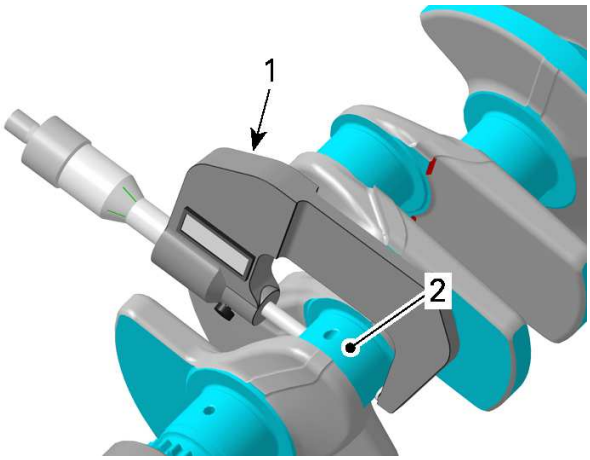


1. *Micrometer*
2. *Crankshaft pin area for plain bearing*

| Crankshaft Pin Diameter | |
|---|---|
| New | 35.979 to 35.995 mm (1.4165 to 1.4171 in) |
| Service limit | 35.969 mm (1.4161 in) |

| Connecting Rod Big End Radial Play | |
|---|---|
| Service limit | 0.08 mm (.0031 in) |

### *Crankshaft Axial Play*

1. With the crankshaft in the cylinder block, measure the crankshaft axial play, using a dial indicator.

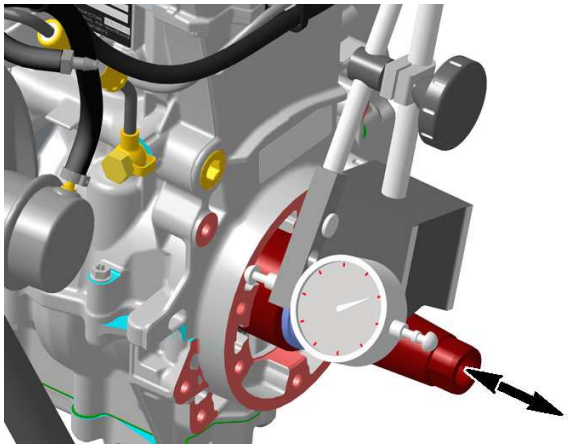

***TYPICAL***

| Crankshaft Axial Play | |
|---|---|
| New | 0.120 to 0.352 mm (.005 to .014 in) |
| Service limit | 0.450 mm (.018 in) |

2. If play is out of specification, replace the crankshaft thrust washers and repeat measurement.

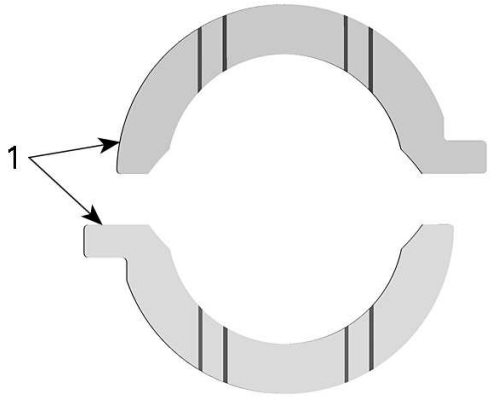


***TYPICAL***
1. *Crankshaft thrust washers*

### *Installing the Crankshaft*

The installation is the reverse of the removal procedure. However, pay attention to following.

1. Turn cylinder block upside down.

**NOTICE**

**Be careful that connecting rods do not hit the cylinder block.**

2. Apply engine oil on all plain bearings before installing them.
3. Install crankshaft along with the timing chain.
4. Lubricate (both sides) and reinstall crankshaft thrust washers with the slots facing against crankshaft counterweights.

**NOTE:** Thrust washers have to be flush with the cylinder block sealing surface.

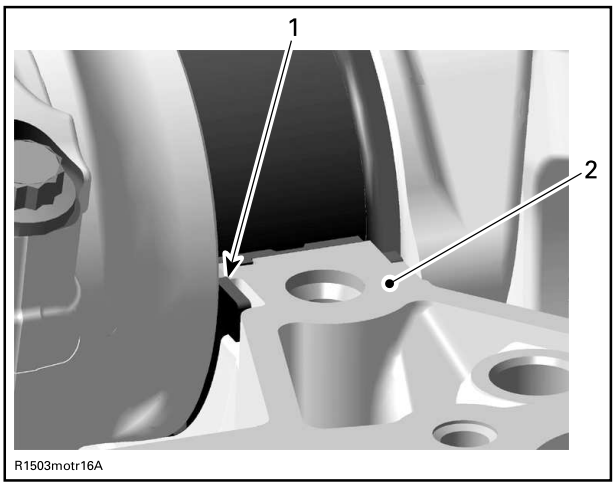


*TYPICAL*
1. *Thrust washer*
2. *Sealing surface*

5. Install connecting rod caps. Refer to *Pistons and Connecting Rods* in this subsection.

**NOTICE**

**It is absolutely necessary to follow this procedure. Otherwise severe engine damage can occur.**

6. Install cylinder block lower half. Refer to *Cylinder Block* in this subsection.
7. Lock crankshaft before further assembly of the engine. See *Crankshaft Locking Procedure* in this subsection.

### *Pistons and Connecting Rods*

#### *Removing the Piston and Connecting Rod*

**NOTE:** It is recommended to measure connecting rod big end axial play prior to remove connecting rod. Refer to *inspecting the Connecting Rod* in this subsection.

1. Disassemble *Cylinder Block* as per procedure in this subsection.
2. Remove connecting rod cap.

**NOTICE**

**Mark cylinder position of connecting rod before disassembly.**

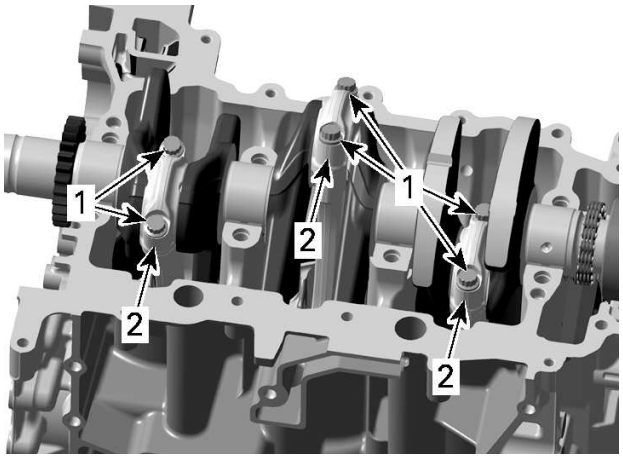


1. *Connecting rod screws*
2. *Connecting rod cap*

3. Remove *Crankshaft* as per procedure in this subsection.
4. Turn cylinder block and push piston with connecting rod out of the cylinder.

#### *Disassembling the Piston and Connecting Rod*

1. Remove one piston pin circlip and discard it.

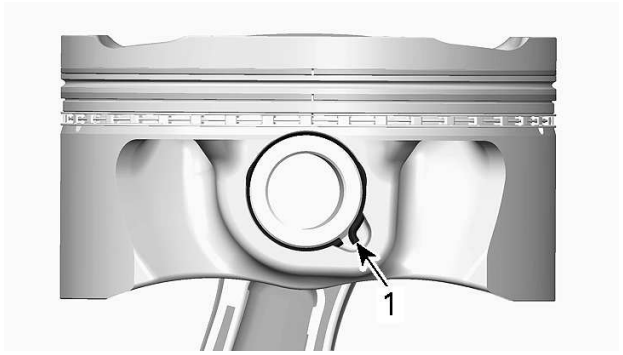


*TYPICAL*
1. *Piston pin circlip*

**NOTE:** The removal of both piston pin circlips is not necessary to remove the piston pin.

2. Push piston pin out of the piston.

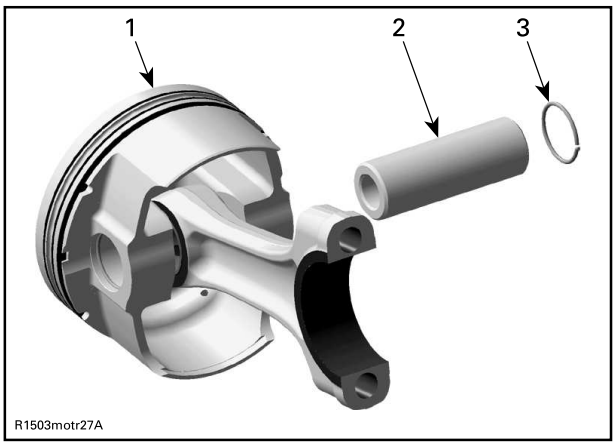


*TYPICAL*
1. *Piston*
2. *Piston pin*
3. *Circlip*

3. Detach piston from connecting rod.

### *Inspecting the Connecting Rod*

#### *Connecting Rod Big End Axial Play*

1. Using a feeler gauge, measure distance between butting face of connecting rod and crankshaft counterweight. If the distance exceeds specified tolerance, replace the worn part.

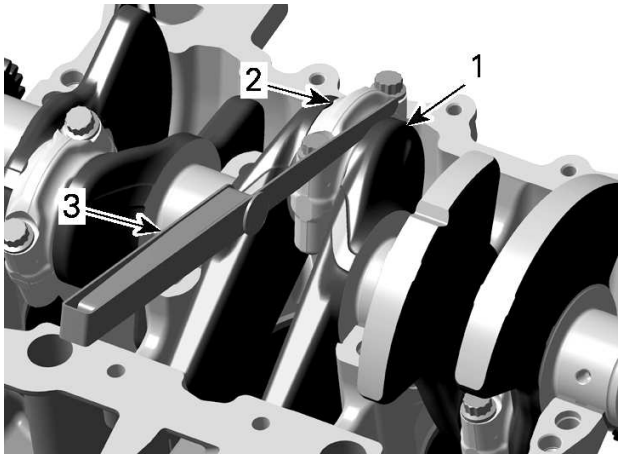


1. *Crankshaft*
2. *Connecting rod*
3. *Feeler gauge*

| Connecting Rod Big End Axial Play | |
|---|---|
| New | 0.100 to 0.352 mm (.004 to .014 in) |
| Service limit | 0.450 mm (.018 in) |

#### *Connecting Rod Small End Radial Play*

1. Measure connecting rod small end, using a bore gauge.

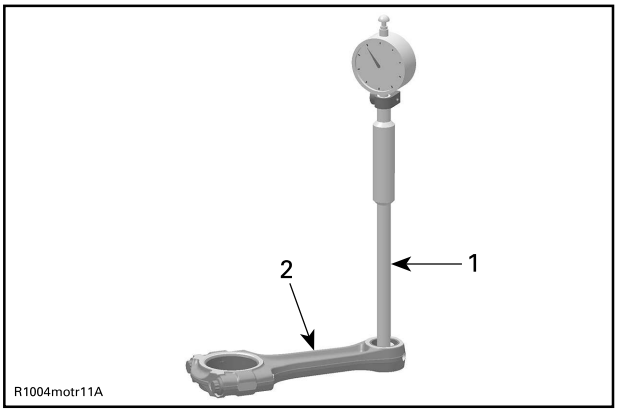


*TYPICAL*
1. *Bore gauge*
2. *Connecting rod*

| Connecting Rod Small End Diameter | |
|---|---|
| New | 18.010 to 18.020 mm (.7091 to .7094 in) |
| Service limit | 18.060 mm (.711 in) |

2. If the connecting rod small end diameter is out of specification, replace the connecting rod.
3. To obtain the radial play, calculate the difference between the piston pin diameter (*Inspecting the Piston Pin*) and the connecting rod small end inner diameter.

| Connecting Rod Small End Radial Play | |
|---|---|
| Service limit | 0.040 mm (.0016 in) |

#### *Connecting Rod Big End Radial Play*

1. Measure inside diameter of connecting rod big end.

| Connecting Rod Big End Diameter | |
|---|---|
| Service limit | 36.06 mm (1.4197 in) |

1. Install the OLD plain bearings as they were mounted initially.
2. Perform the tightening procedure as described in *Installing Piston and Connecting Rod* in this subsection.

**NOTE:** To measure the connecting rod big end diameter, ALWAYS use the OLD connecting rod screws.

3. Measure inside diameter in longitudinal direction of the connecting rod.

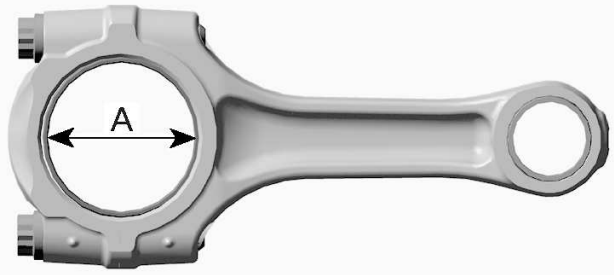


***TYPICAL***
*i. Connecting rod big end bearing*

2. To obtain the connecting rod big end radial play, calculate the difference between the big end diameter and the crankshaft pin diameter (see *Inspecting the Crankshaft* in this subsection).

| Connecting Rod Big End Radial Play | |
|---|---|
| Service limit | 0.080 mm (.0031 in) |

3. If connecting rod big end diameter is out of specification, install NEW plain bearings.

### *Inspecting the Piston Pin*

1. Using synthetic abrasive woven, clean piston pin from deposits.
2. Inspect piston pin for scoring, cracks or other damage.
3. Measure piston pin diameter, using a micrometer. See the following illustration for the proper measurement position.

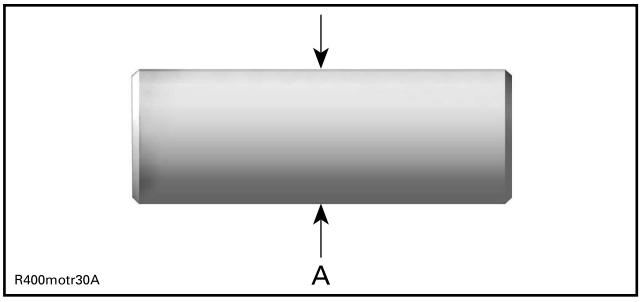


***TYPICAL***
*A. Measure piston pin diameter here*

| Piston Pin Diameter | |
|---|---|
| New | 17.996 to 18.00 mm (.7085 to .7087 in) |
| Service limit | 17.986 mm (.7081 in) |

4. Replace piston pin if out of specification.

### *Inspecting the Piston*

1. Inspect piston for scoring, scuffing, cracks or other damage. Replace piston and piston rings if necessary.
2. Using a micrometer, measure piston perpendicularly (90°) to piston pin axis at 8.5 mm (11/32 in) from the skirt edge.

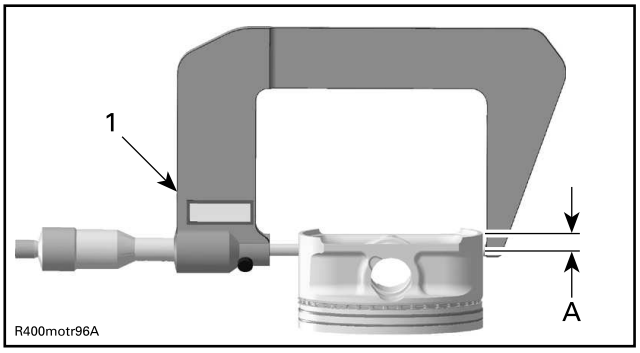


***TYPICAL***
*1. Measuring perpendicularly (90°) to piston pin axis*
*A. 8.5 mm (11/32 in)*

| Piston Measurement | |
|---|---|
| New | 73.950 to 73.966 mm (2.9114 to 2.912 in) |
| Service limit | 73.920 mm (2.9102 in) |

3. Replace piston if out of specification.

### *Piston/Cylinder Clearance*

1. Adjust and lock a micrometer to the piston dimension.

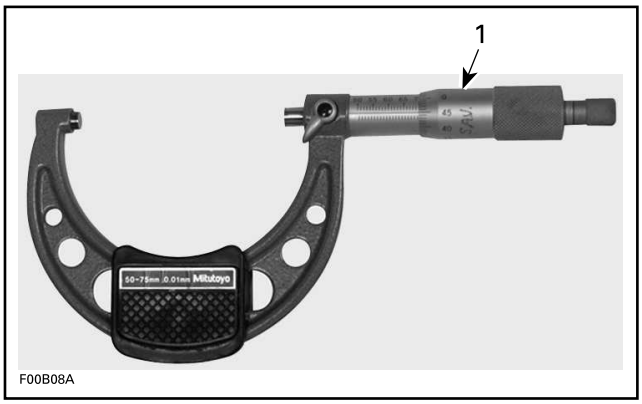


*TYPICAL*
*1. Micrometer set to the piston dimension*

**NOTE:** Make sure used piston is not worn.

2. With the micrometer locked at step 1, adjust a cylinder bore gauge to the micrometer dimension and set the indicator to 0 (zero).

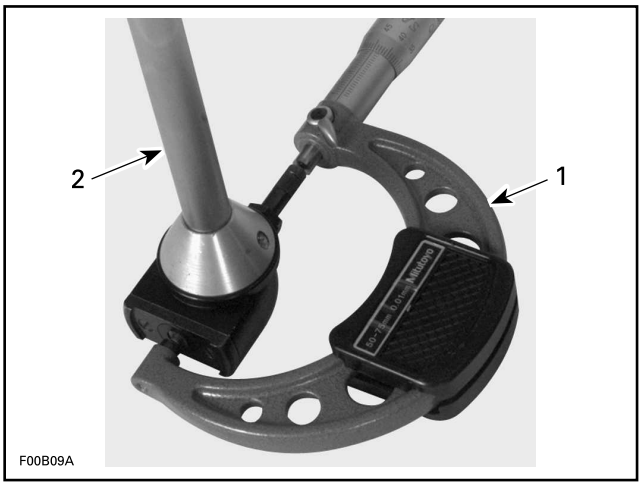


*TYPICAL*
*1. Use the micrometer to set the cylinder bore gauge*
*2. Cylinder bore gauge*

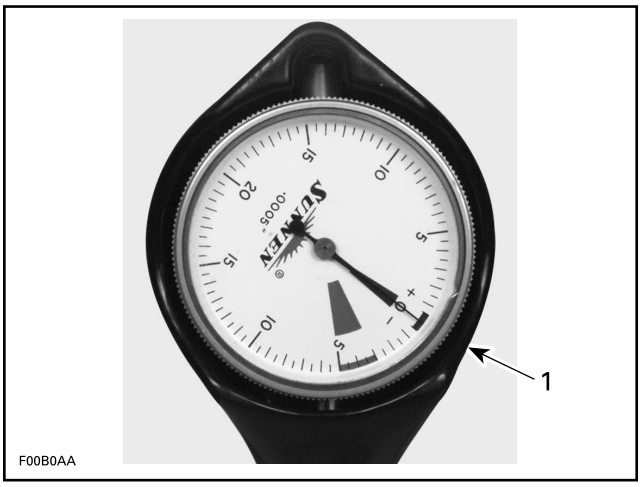


*TYPICAL*
*1. Indicator set to 0 (zero)*

**NOTE:** Make sure the cylinder bore gauge indicator is set exactly at the same position as with the micrometer, otherwise the reading will be false.

3. Position the cylinder bore gauge 35 mm (1-3/8 in) below the cylinder head mating surface, measuring perpendicularly (90°) to piston pin axis.
4. Read measurement on cylinder bore gauge. The result is the exact piston/cylinder clearance.

| Piston/Cylinder Clearance | |
|---|---|
| New | 0.037 to 0.067 mm (.0015 to .0026 in) |
| Service limit | 0.080 mm (.0031 in) |

5. If clearance exceeds specified tolerance, replace piston and repeat measurement procedure.

### *Assembling Piston and Connecting Rod*

The assembly is the reverse of the disassembly procedure. However, pay attention to the following.

1. Apply engine oil on piston pin.
2. Insert piston pin into piston and connecting rod.

   Ensure to reinstall all parts in their original position as marked during removal.
3. Install **NEW** piston pin circlip(s).

| Piston circlip installer (P/N 529036426) |  |
|---|---|

**NOTICE**

**Always replace removed piston pin circlips by NEW ones.**

**NOTICE**

**If piston pin circlip installation fails, repeat step 3 by using a NEW circlip.**

1. Place the circlip in the sleeve and push piston circlip installer handle until circlip reaches the mid position in the sleeve.

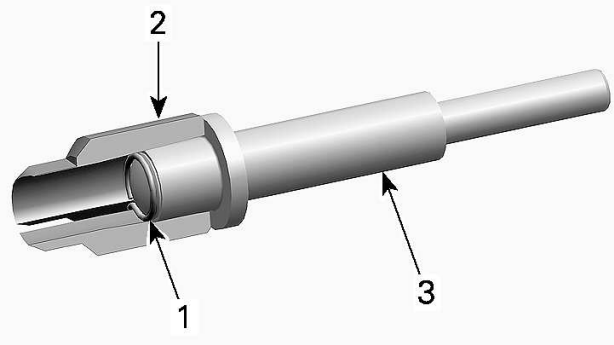


***TYPICAL***

*i. Circlip*
*ii. Sleeve*
*iii. Installer handle*

2. Put the distance sleeve on the installer handle.
3. Push piston circlip installer handle until distance sleeve makes contact with the sleeve.

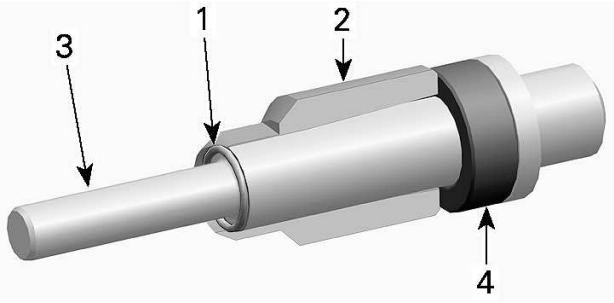


*i. Circlip*
*ii. Sleeve*
*iii. Installer handle*
*iv. Distance sleeve*

4. Remove distance sleeve and insert installer handle into the sleeve.
5. Insert the end of the handle into the piston pin, then push to engage the circlip into the piston groove.

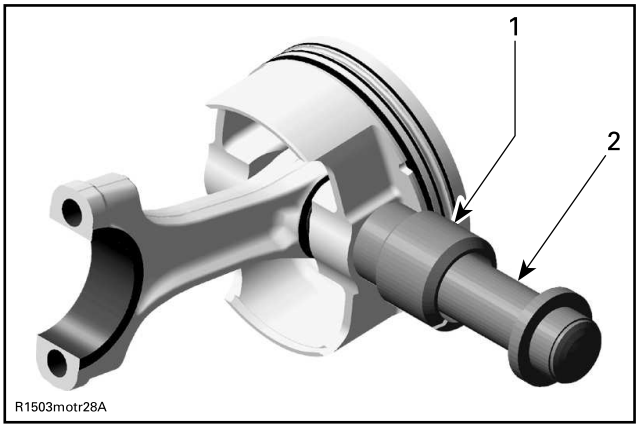


***TYPICAL***

*i. Sleeve with piston circlip inside*
*ii. Piston clip installer handle*

**NOTE:** Ensure the hook of the piston pin circlip is properly positioned.

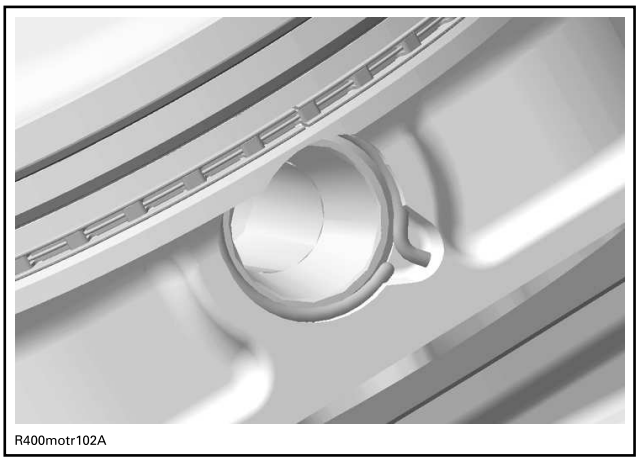


***TYPICAL - CORRECT POSITION OF THE PISTON PIN CIRCLIP***

4. Correctly install plain bearings and carefully clean split surface on both sides (cracked area) with compressed air.

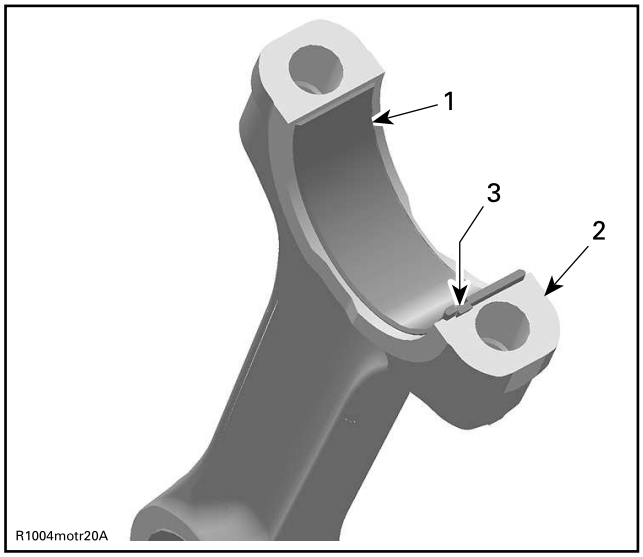


*TYPICAL*
1. *Half bearing of connecting rod big end*
2. *Split surface of the connecting rod*
3. *Protrusion of bearing in line with connecting rod groove*

**NOTICE**

**The arrow on top of the piston and the punched marks on the connecting rods must always point towards exhaust.**

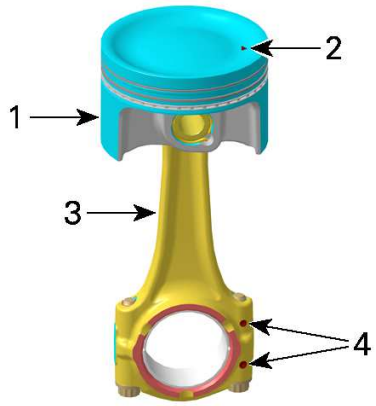


1. *Piston*
2. *Arrow on top*
3. *Connecting rod*
4. *Punched marks*

### *Installing the Piston and Connecting Rod*

1. Use engine oil and lubricate:
   - Piston
   - Piston rings
   - Cylinder bore
   - Connecting rod bearings.
2. Slide piston into cylinder bore. Pay attention to the following.

| **Piston ring compressor (P/N 529036208)** |  |
|---|---|

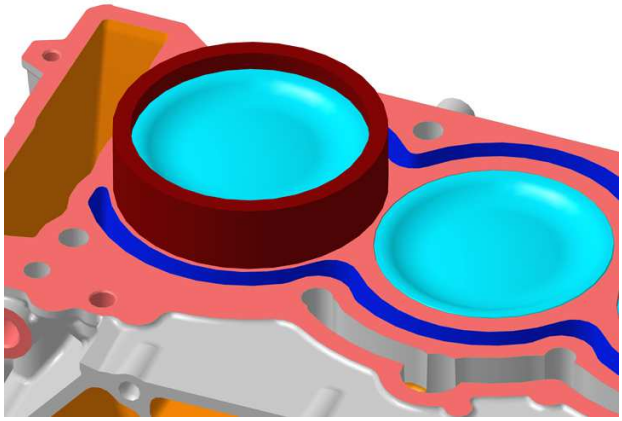

*TYPICAL*

**NOTICE**

**Piston installed with the arrow in the wrong direction would cause serious engine damage.**

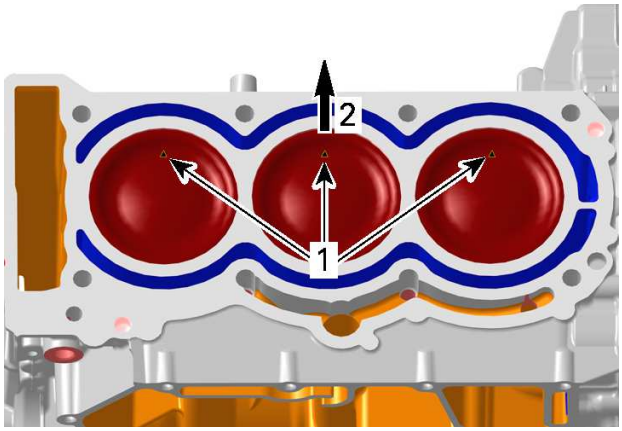


1. *Arrows*
2. *Exhaust*

1. If reused, install piston in its original bore.
2. Make sure piston rings are properly spaced.

**NOTICE**

**The ring gaps of both compression rings should always be 180° from each other and 90° from the arrow on top of the piston.**

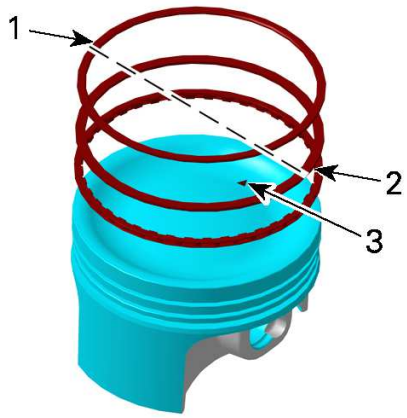


***RING GAPS AT 180° FROM EACH OTHER AND 90° FORM ARROW***

*i. Rectangular ring - ring gap*
*ii. Taper-face ring - ring gap*
*iii. Arrow*

3. The arrow on top of the piston must point towards exhaust.
3. Turn cylinder block upside down.
4. Install *Crankshaft* as per procedure in this subsection.
5. Oil crankshaft pin.
6. Install connecting rod caps.

**NOTE:** Printed marks on connecting rod and cap must point together.

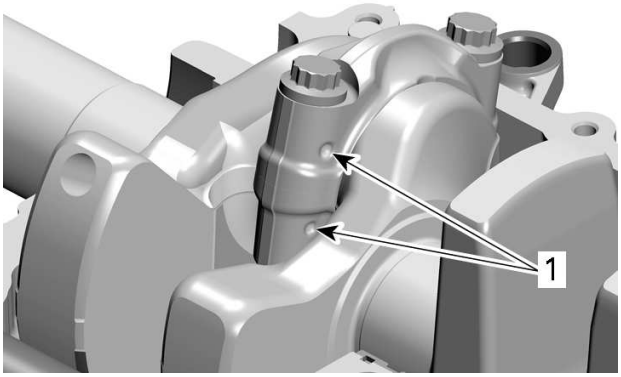


***TTYPICAL***
*1. Printed marks*

**NOTICE**

**This assembly uses stretch screws. Always use NEW screws and strictly adhere to the tightening procedure.**

7. Tighten connecting rod screws as follows:

**NOTICE**

**Failure to strictly follow this procedure may cause screws to loosen and lead to severe engine damage.**

1. Torque both connecting rod screws of a connecting rod.

| Tightening Procedure | | |
|---|---|---|
| Connecting rod screws | Step A | 12 ± 2 Nm (106 ± 18 lbf-in) |

2. Use a torque angle gauge to carry out the second step.

| Tightening Procedure | | |
|---|---|---|
| Connecting rod screws | Step B | Additional 70° ± 5° |

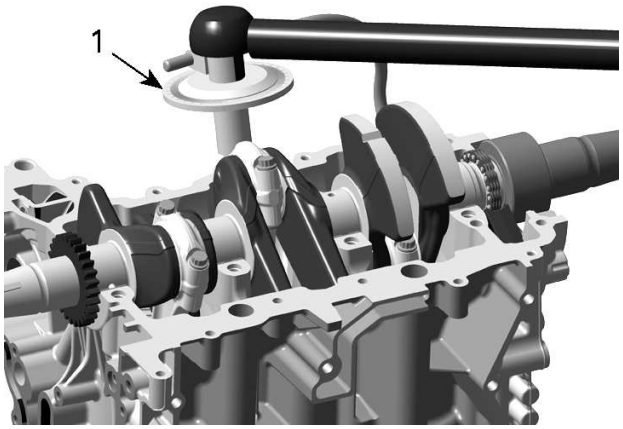


***TYPICAL***

8. Install all other removed parts.

### *Piston Rings*

#### *Removing the Piston Rings*

1. Remove piston, see procedure in this subsection.
2. Remove rings from piston.

#### *Inspecting the Piston Rings*

#### *Ring/Piston Groove Clearance*

1. Using a feeler gauge measure each ring/piston groove clearance.



| Ring/Piston Groove Clearance | |
|---|---|
| Upper Compression Ring | |
| New | 0.030 to 0.066 mm (.0012 to .0026 in) |
| Service limit | 0.120 mm (.0047 in) |
| Lower Compression Ring | |
| New | 0.020 to 0.056 mm (.0008 to .0022 in) |
| Service limit | 0.120 mm (.0047 in) |
| Oil Scraper Ring | |
| New | 0.010 to 0.040 mm (.0004 to .0016 in) |
| Service limit | 0.150 mm (.0059 in) |

2. If clearance is out of specification, the piston and rings must be replaced.

### *Ring End Gap*

1. Place piston ring in cylinder bore between 8 to 16 mm (5/16 to 5/8 in) from the top of cylinder.
   1. Use a piston as a pusher in order to correctly position the ring in the cylinder bore
2. Using a feeler gauge, check ring end gap.

| Ring End Gap | |
|---|---|
| Upper Compression Ring | |
| New | 0.20 to 0.35 mm (.008 to .014 in) |
| Service limit | 1.20 mm (.047 in) |
| Lower Compression Ring | |
| New | 0.30 to 0.50 mm (.012 to .02 in) |
| Service limit | 1.20 mm (.047 in) |
| Oil Scraper Ring | |
| New | 0.20 to 0.70 mm (.008 to .028 in) |
| Service limit | 1.20 mm (.047 in) |

3. If ring end gap is out of specification, replace piston rings.

### *Installing the Piston Rings*

1. Install piston rings in the following order.

**NOTE:** Use a ring expander to prevent breakage during installation. The oil ring must be installed by hand.

1. Install oil scraper ring.
2. Install the lower compression ring with the letter “N” facing up.
3. Install upper compression ring with the letter “N” facing up.

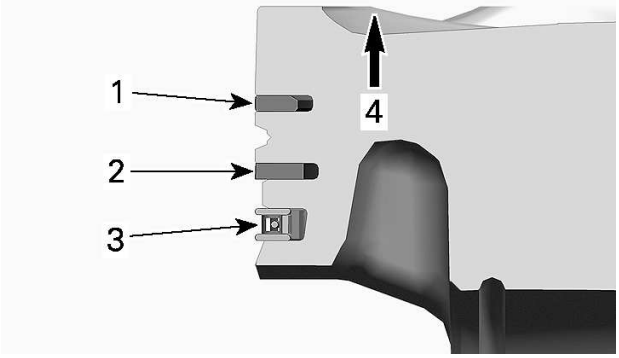


*TYPICAL*

*i. Rectangular ring*
*ii. Taper-face ring*
*iii. Oil scraper ring*
*iv. Letter “N” facing up*

**NOTICE**

**Ensure that upper and lower compression rings are not interchanged.**

2. Ensure rings rotate smoothly after installation.

# Notes

## Technician's Notes

## Related Documents

| Bulletins | |
|---|---|
| | |
| | |
| | |
| | |
| | |
| | |
| | |
| | |
| | |
| | |
| | |
| | |
| | |
| Instruction Sheets | |
| | |
| | |
| | |
| | |
| | |
| | |
| | |
| | |
| | |
| | |
| | |
| Other | |
| | |
| | |
| | |
| | |
| | |
| | |
| | |
| | |
| | |
| | |
| | |

02

# ELECTRONIC MANAGEMENT SYSTEM

# 02 Electronic Management System

# Engine Control Module (ECM) – GEN1

## SERVICE TOOLS


| Description | Part Number | Page |
|---|---|---|
| ECM ADAPTER TOOL GEN2 | (P/N 529036513) | 308–309 |
| ECM ADAPTER TOOL | (P/N 529036166) | 302 |
| FLUKE 115 MULTIMETER | (P/N 529035868) | 302, 308–309 |

## General

### *System Description*

#### *Electrical System*

#### *Engine Control Module (ECM)*

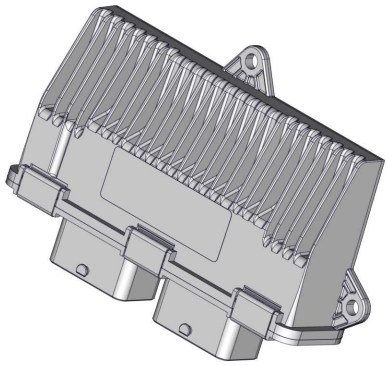

*ECM GEN1 – ME17*

The ECM controls the engine operation and the vehicle power management. To control the engine, the ECM reads the inputs from the sensors which it compares to predetermined parameters stored in the ECM (fuel and ignition maps), makes computations, and activates the outputs accordingly (injectors, ignition coils etc.).

Refer to *Engine Management System (EMS)* subsection for more information.

## Troubleshooting

### *Diagnostic Tips*

As a first troubleshooting step, always check for applicable fault codes using the BRP diagnostic software (BUDS2).

#### *Electrical Related Problems*

#### *Electrical Connections*

Pay particular attention to ensure that terminals and pins are not out of their connectors, corroded, or out of shape.

Do not apply dielectric grease or other lubricants on the ECM connectors.

**NOTICE**

**Never probe the ECM connector terminals without the adapter tool. Doing so may damage terminals.**

## Procedures

### *Engine Control Module (ECM)*

#### *ECM Location*

The ECM is located above the engine, under the steering column support.

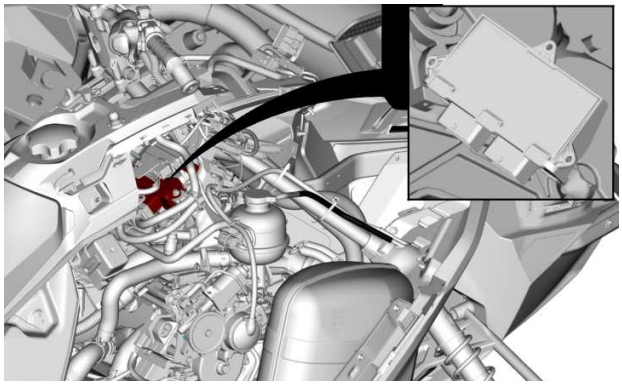

#### *ECM Connector Identification*

There are 2 connectors connected to the ECM:

– Engine harness connected to ECM-A
– Vehicle system control harness connected to ECM-B.

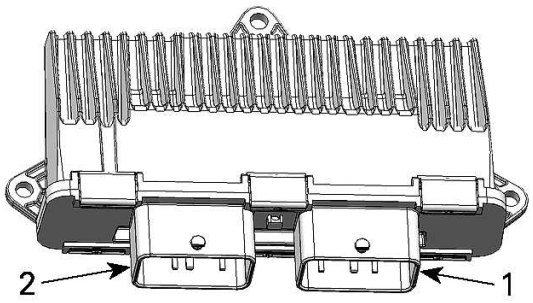


*ECM CONNECTOR IDENTIFICATION - COOLING FINS FACING OUT*

1. *Connector A*
2. *Connector B*

The ECM connectors have 48 pins.

**NOTE:** For connector information, cleaning and probing, refer to *Wiring Harness and Connectors* subsection.

#### *Quick Test to Validate ECM Operation*

1. Briefly press START/STOP button.
2. This should wake up the ECM. The ECM will then activate relay 1 for approximately 12 seconds after which it will turn off all power. If the D. E. S. S. key is installed when the START/STOP button is pressed, the power will stay on for approximately 40 seconds.

| Quick Indication that ECM Is Powered (Assuming the Observed Component Is Working) |
|---|
| Multifunction gauge comes ON. |
| Fuel pump turns on for approx. 2 seconds (if key on D.E.S.S. post installed). |

If ECM does not turn on, check the following:
- Main fuse (FA) and fuse F4.
- Battery voltage. Refer to *Charging System* subsection.
- Main relay RY1
- START/STOP switch. Refer to *Starting System* subsection.
- ECM power circuit wires and ground wires.

3. For testing of fuses and main relay RY1, refer to *Power Distribution and Grounds* subsection.

**NOTE:** When the main relay is not working, the ECM and the complete vehicle electrical system will not be powered.

### *Testing the ECM Wake Up Circuit*

1. Disconnect ECM-B connector and connect it to the ECM adapter tool.

| | |
|---|---|
| **ECM adapter tool (P/N 529036166)** |  |

2. Set the multimeter to Vdc.

| | |
|---|---|
| **Fluke 115 multimeter (P/N 529035868)** |  |

3. While pressing the START/STOP button, read voltage as follows.

| ECM Wake Up Circuit Test | | |
|---|---|---|
| **ECM Adapter Pin** | **Battery Post** | **Specification** |
| D1 | Negative (-) | Battery voltage |

4. If reading is as per specification, refer to *Testing the ECM Power Supply*.
5. If reading is out of specification:
   - Test the START/STOP switch, refer to *Starting System* subsection.
   - If the START/STOP switch tests good, test wiring and connectors from battery to ECM. Refer to *Wiring Diagram*.

### *Testing the ECM Power Supply*

1. Disconnect ECM-B connector and connect it to the ECM adapter tool.

| | |
|---|---|
| **ECM adapter tool (P/N 529036166)** |  |

2. Install a jumper wire between B-H2 and B-M2 on the ECM adapter tool.
3. Turn the ignition switch to ON.
4. Set the multimeter to Vdc.

| | |
|---|---|
| **Fluke 115 multimeter (P/N 529035868)** |  |

5. Check for voltage as follows.

| ECM Power Supply Test | | |
|---|---|---|
| **ECM Adapter Pin** | **Battery Post** | **Specification** |
| M4 | Negative (-) | Battery voltage |

If reading is out of specification, check the following:
- Main relay
- Wiring and connections, refer to the *Wiring Diagram*.

### *Testing the Continuity of ECM Ground Circuits*

1. Connect ECM-B connector on the ECM adapter tool.

| | |
|---|---|
| **ECM adapter tool (P/N 529036166)** |  |

2. Set multimeter to Ω and probe adapter terminals as per following table.

| | |
|---|---|
| **Fluke 115 multimeter (P/N 529035868)** |  |

| ECM Ground Circuit Continuity Test | | |
|---|---|---|
| ECM Adapter Pin | Battery Post | Specification |
| L1 | Negative (-) | Close to 0 Ω |
| M2 | | |
| M3 | | |

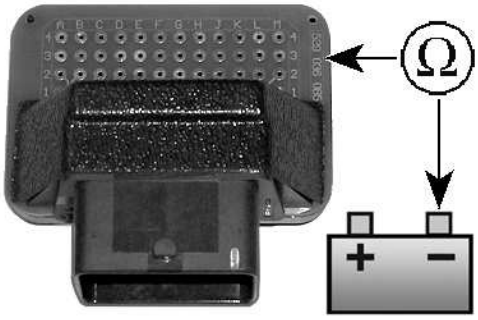

If any measurement is out of specification refer to *Power Distribution and Grounds* subsection and check the following:

- Wiring and connections
- Engine ground
- Battery ground
- Frame ground.

### *Replacing the ECM*

Prior to replacing an ECM, ensure that the engine and all related systems are functioning normally.

Proceed with an *ECM First Initialization* as it may resolve the problem.

If the ECM and the digital display are both to be replaced, always replace the digital display first.

### *Verifying the BUDS2 Version*

Make sure that the BRP diagnostic software BUDS2 is updated to the required version.

1. Start BUDS2 and logon.
2. In BUDS2, go to **About** page.

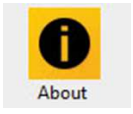


3. Validate the following:
   - **Application Version**: 21.1.0 or newer
   - **ODX Version**: 21.31.0 or newer
   - **OTX Version**: 21.36.0 or newer
   - **EDB Dump Version**: 21.18.0 or newer
   - **Workspace Version**: 21.20.0 or newer
4. If the information is different, connect the computer to *Knowledge Center* to update BUDS2.

### *Powering the Vehicle When Using BUDS2*

**NOTICE**

**Make sure the unit's battery is fully charged before undertaking this operation. Never use a battery charger to temporarily substitute the battery as it may cause the ECM to function erratically, or not at all.**

**NOTICE**

**Continuous power to the computer is mandatory while performing this operation.**

### *Programming a Blank ECM*

In case of discrepancies between this procedure and BUDS2 instructions, follow the instructions given in BUDS2.

The engine identification number (EIN) will have to be enter manually at the end of the procedure. If the actual ECM can be scan with BUDS2, get the EIN in the identification section of the **Summary** page. Otherwise, find it on the engine. Refer to the Introduction section of the appropriate service manual to find its location.

**IMPORTANT**: Make sure to have all programmable keys in hand before starting the procedure.

- If the ECM is not the root cause of the issue, it must be reset as new within 14 days from the last programming. Afterwards, it will not be possible.
- The ECM can only be reset as new if it is holding the file from the initial process. If any update is flashed into the ECM it will no longer be eligible to be reset as new.

1. Connect the vehicle to the BRP diagnostic software (BUDS2).
2. In BUDS2, go to:
   - **Summary** page
   - **Vehicle** button
   - **Health** tab.
3. Double click on **Program ECM**.

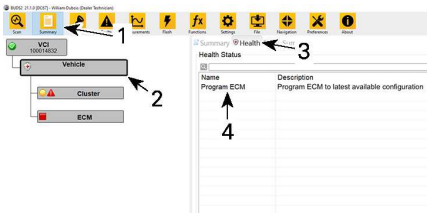


1. ***Summary*** *page*
2. ***Vehicle*** *button*
3. ***Health*** *tab*
4. ***Program ECM***

4. Make sure the vehicle model number is good.
5. Click on **Proceed**.

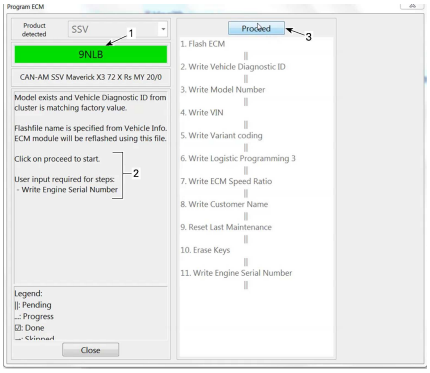


1. *Vehicle Model Number*
2. *Engine Serial Number to be entered when required*
3. ***Proceed*** *button*

6. When the **Reset Service** window appears, click on **Yes**.

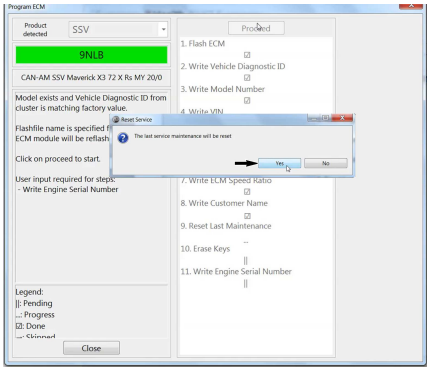


7. Enter the engine identification number.

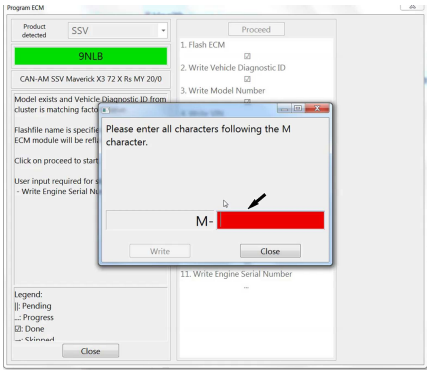


8. Click **Write**, then **Close**.

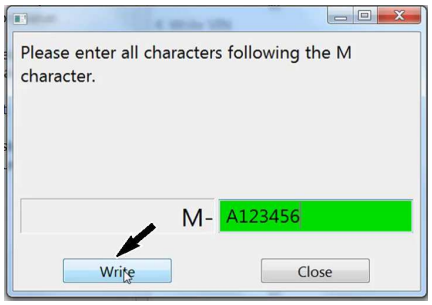


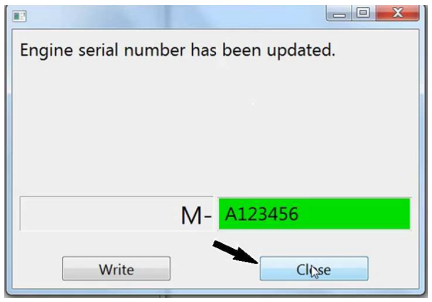


9. A message confirms that the engine identification number is entered. Close the window.

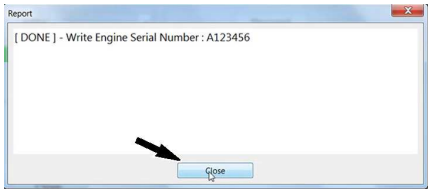


10. If the procedure is successful, the following window will show up. Close it.

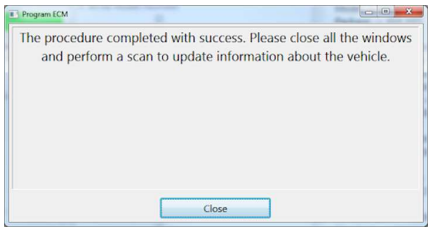


11. **Scan** the vehicle again.
12. Go to:

    - **Summary** page
    - **Vehicle** button
    - **Summary** tab.

13. Validate the following:

    - Vehicle Identification Number (VIN)
    - Vehicle Model Number
    - Engine Serial Number

    **Last Service Hour** and **Maintenance Hour** are reset to **0h00**.

The **Engine Total Hour** and **Vehicle Total Hour** can **NOT** be reset to **0h00** and will always remain at the value before the time of resetting as new.

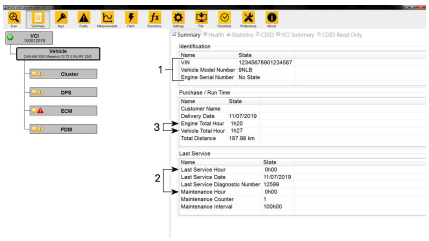

1. *Vehicle information*
2. *Reset hour*
3. *Non reset hour*

14. Install all ECM updates available for the vehicle.
15. Reset fault codes. If fault codes are generated, carry out the required service actions.
16. Perform key programming.
17. Start the engine and make sure it operates properly throughout its full engine RPM.

### *Reset the ECM as a Service Part*

1. Connect the vehicle to the BRP diagnostic software (BUDS2).
2. In BUDS2, go to:
   - **Settings** page
   - **Vehicle** button.
3. Double click on **Tools** - Reset the ECM as a Service Part.

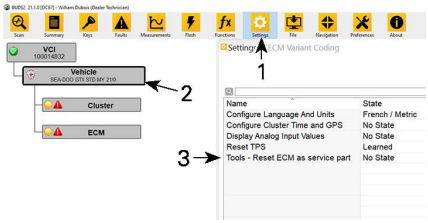

1. ***Settings** page*
2. ***Vehicle** button*
3. ***Tools***

4. Click on **Proceed**.

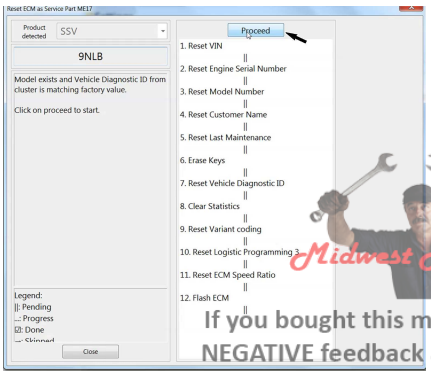

All boxes are checked when the ECM reset is completed.

5. Close the window.

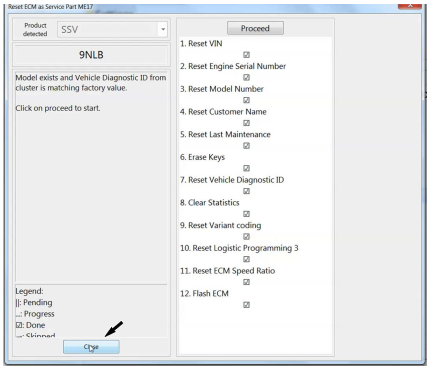

6. **Scan** the vehicle again.
7. Go to:
   - **Summary** page
   - **Vehicle** button
   - **Health** tab.

Validate the following to confirm that the ECM reset has succeeded:

- No vehicle description in the **Vehicle** button
- In the description field, **Program ECM to latest available configuration**.



1. ***Vehicle** button*
2. *Description field*

Midwest Manuals
Green Manuals
Paperless Manuals
For a Better Tomorrow
www.green-manuals.com
If you bought this manual from any other seller please leave them
NEGATIVE feedback and notify us at bestshopmanuals@gmail.com

# Engine Control Module (ECM) – GEN2

## SERVICE TOOLS

| Description | Part Number | Page |
|---|---|---|
| ECM ADAPTER TOOL GEN2 | (P/N 529036513) | 308–309 |
| ECM ADAPTER TOOL | (P/N 529036166) | 302 |
| FLUKE 115 MULTIMETER | (P/N 529035868) | 302, 308–309 |

## General

### *System Description*

### *Electrical System*

### *Engine Control Module (ECM)*

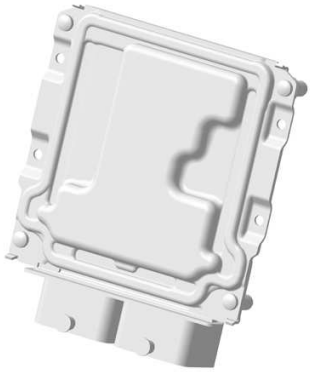

*ECM GEN2 – XCU*

The ECM controls the engine operation and the vehicle power management. To control the engine, the ECM reads the inputs from the sensors which it compares to predetermined parameters stored in the ECM (fuel and ignition maps), makes computations, and activates the outputs accordingly (injectors, ignition coils etc.).

## Troubleshooting

### *Diagnostic Tips*

As a first troubleshooting step, always check for applicable fault codes using the BRP diagnostic software (BUDS2).

### *Electrical Related Problems*

### *Electrical Connections*

Pay particular attention to ensure that terminals and pins are not out of their connectors, corroded, or out of shape.

Do not apply dielectric grease or other lubricants on the ECM connectors.

**NOTICE**

**Never probe the ECM connector terminals without the adapter tool. Doing so may damage terminals.**

## Procedures

### *Engine Control Module (ECM)*

### *ECM Location*

The ECM is located above the engine.

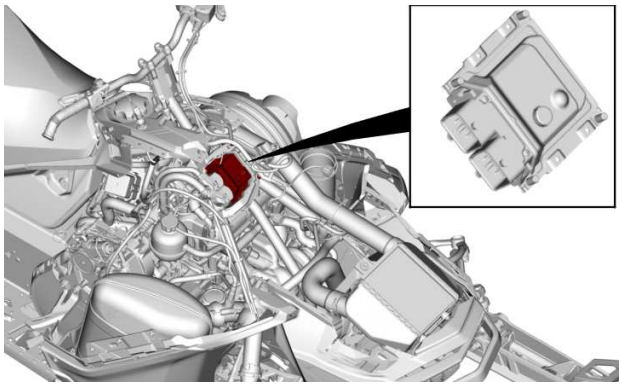

### *ECM Connector Identification*

There are 2 connectors connected to the ECM:

– Engine harness connected to ECM-13
– Vehicle system control harness connected to ECM-4.

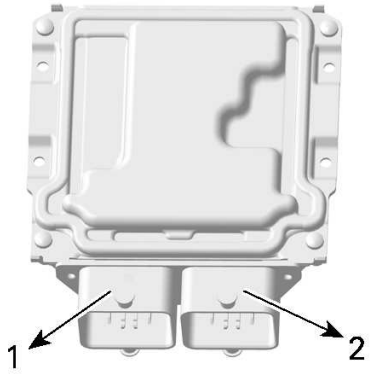


*ECM GEN2 CONNECTOR IDENTIFICATION, VIEW TO FRONT SIDE*

1. *Connector 13*
2. *Connector 4*

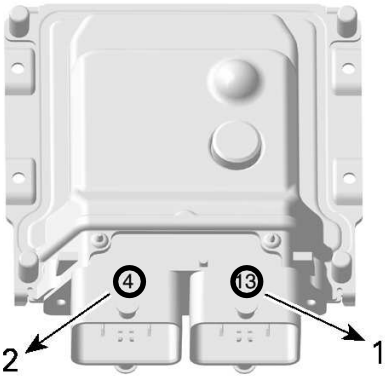


*ECM GEN2 CONNECTOR IDENTIFICATION, VIEW TO BACK SIDE*

1. *Connector 13*
2. *Connector 4*

Each ECM connector has 56 pins.

**NOTE:** For connector information, cleaning and probing, refer to *Wiring Harness and Connectors* subsection.

### *Quick Test to Validate ECM Operation*

1. Briefly press START/STOP button.

   This should wake up the ECM. The ECM will then activate relay 1 for approximately 12 seconds after which it will turn off all power. If the D. E. S. S. key is installed when the START/STOP button is pressed, the power will stay on for approximately 40 seconds.

| **Quick Indication that ECM Is Powered (Assuming the Observed Component Is Working)** |
|---|
| Multifunction gauge comes ON. |
| Fuel pump turns on for approx. 2 seconds (if key on D.E.S.S. post installed). |

   If ECM does not turn on, check the following:
   - Main fuse and fuse F4.
   - Battery voltage. Refer to *Charging System* subsection.
   - Main relay RY1
   - START/STOP switch. Refer to *Starting System* subsection.
   - ECM power circuit wires and ground wires.
2. For testing of fuses and relay RY1, refer to *Power Distribution and Grounds* subsection.

**NOTE:** When the main relay is not working, the ECM and the complete vehicle electrical system will not be powered.

### *ECM First Initialization*

This procedure performs a reset of the following values in the ECM:
- TAS (Throttle Accelerator Sensor)
- TPS (Throttle Position sensor)

This reset **must** be carried out whenever the ECM has been replaced.

This reset **may** be carried out whenever any of the following components have been replaced instead of their respective reset procedures:
- Throttle body (for TPS)

1. Connect the vehicle to the BRP diagnostic software (BUDS2).
2. In B.U.D.S., select the following:
   - **Settings** page
   - **ECM** button
   - **ECM First Initialization**
3. In the **ECM first initialization** field, click on the **Reset** button.
4. Follow the instructions in the message boxes that appear.

   If the operation is successful, a message will be displayed stating that the reset was successful.

   If an error occurred or a component is out of range, a message may be displayed. Follow the instructions in the message and repeat the procedure.
5. Check for fault codes.

   If a fault code is generated, carry out the service actions, reset the fault and repeat the reset procedure.
6. Start engine and make sure it operates normally throughout its full engine RPM range.

### *Testing the ECM Wake Up Circuit*

1. Disconnect ECM-4 connector and connect it to the ECM adapter tool.

| | |
|---|---|
| **ECM adapter tool GEN2 (P/N 529036513)** |  |

2. Set the multimeter to Vdc.

| | |
|---|---|
| **Fluke 115 multimeter (P/N 529035868)** |  |

3. While pressing the START/STOP button, read voltage as follows.

| **ECM Wake Up Circuit Test** | | |
|---|---|---|
| **ECM Adapter Pin** | **Battery Post** | **Specification** |
| 10 | Negative (-) | Battery voltage |

4. If voltage is as per specification, refer to *Testing the ECM Power Supply* in this subsection.
5. If voltage is out of specification:
   1. Test the START/STOP switch, refer to *Starting System* subsection.
   2. If the START/STOP switch tests good, test wiring and connectors from battery to ECM. Refer to *Wiring Diagram*.

### *Testing the ECM Power Supply*

1. Disconnect ECM-4 connector and connect it to the ECM adapter tool.

| ECM adapter tool GEN2 (P/N 529036513) |  |
|---|---|

2. Install a jumper wire between 4-H2 and 4-M2 on the ECM GEN2 adapter tool.
3. Turn the ignition switch to ON.
4. Set the multimeter to Vdc.

| Fluke 115 multimeter (P/N 529035868) |  |
|---|---|

5. Check for voltage as follows.

| ECM Power Supply Test | | |
|---|---|---|
| **ECM Adapter Pin** | **Battery Post** | **Specification** |
| 55 | Negative (-) | Battery voltage |
| 56 | | |

6. If voltage is not measured, check the following:
   - Main relay
   - Wiring and connections, refer to the *Wiring Diagram*.

### *Testing the Continuity of ECM Ground Circuits*

1. Connect ECM-4 connector on the ECM adapter tool.

| ECM adapter tool GEN2 (P/N 529036513) |  |
|---|---|

2. Set multimeter to Ω and probe adapter terminals as per following table.

| Fluke 115 multimeter (P/N 529035868) |  |
|---|---|

| ECM Ground Circuit Test | | |
|---|---|---|
| **ECM Adapter Pin** | **Battery Post** | **Specification** |
| 51 | Negative (-) | Close to 0 Ω (continuity) |
| 52 | | |
| 53 | | |
| 54 | | |

If any measurement is out of specification refer to *Power Distribution and Grounds* subsection and check the following:
- Wiring and connections
- Engine ground
- Battery ground
- Frame ground.

### *Replacing the ECM*

Prior to replacing an ECM, ensure that the engine and all related systems are functioning normally.

Proceed with an *ECM First Initialization* as it may resolve the problem.

If the ECM and the digital display are both to be replaced, always replace the digital display first.

### *Verifying the BUDS2 Version*

Make sure that the BRP diagnostic software BUDS2 is updated to the required version.

1. Start BUDS2 and logon.
2. In BUDS2, go to **About** page.




3. Validate the following:
   - **Application Version**: 21.1.0 or newer
   - **ODX Version**: 21.31.0 or newer
   - **OTX Version**: 21.36.0 or newer
   - **EDB Dump Version**: 21.18.0 or newer
   - **Workspace Version**: 21.20.0 or newer
4. If the information is different, connect the computer to *Knowledge Center* to update BUDS2.

### *Powering the Vehicle When Using BUDS2*

**NOTICE**

**Make sure the unit's battery is fully charged before undertaking this operation. Never use a battery charger to temporarily substitute the battery as it may cause the ECM to function erratically, or not at all.**

**NOTICE**

**Continuous power to the computer is mandatory while performing this operation.**

### *Programming a Blank ECM*

In case of discrepancies between this procedure and BUDS2 instructions, follow the instructions given in BUDS2.

The engine identification number (EIN) will have to be enter manually at the end of the procedure. If the actual ECM can be scan with BUDS2, get the EIN in the identification section of the **Summary** page. Otherwise, find it on the engine. Refer to the Introduction section of the appropriate service manual to find its location.

**IMPORTANT**: Make sure to have all programmable keys in hand before starting the procedure.

- If the ECM is not the root cause of the issue, it must be reset as new within 14 days from the last programming. Afterwards, it will not be possible.
- The ECM can only be reset as new if it is holding the file from the initial process. If any update is flashed into the ECM it will no longer be eligible to be reset as new.

1. Connect the vehicle to the BRP diagnostic software (BUDS2).
2. In BUDS2, go to:
   - **Summary** page
   - **Vehicle** button
   - **Health** tab.
3. Double click on **Program ECM**.

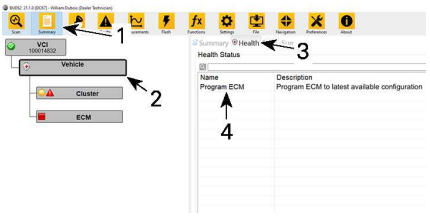


1. ***Summary*** *page*
2. ***Vehicle*** *button*
3. ***Health*** *tab*
4. ***Program ECM***

4. Make sure the vehicle model number is good.
5. Click on **Proceed**.

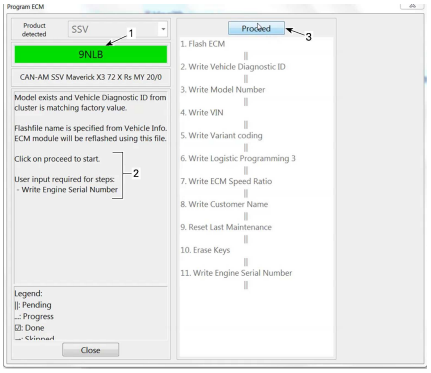


1. *Vehicle Model Number*
2. *Engine Serial Number to be entered when required*
3. ***Proceed*** *button*

6. When the **Reset Service** window appears, click on **Yes**.

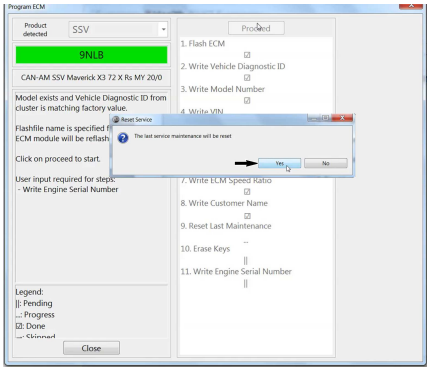


7. Enter the engine identification number.

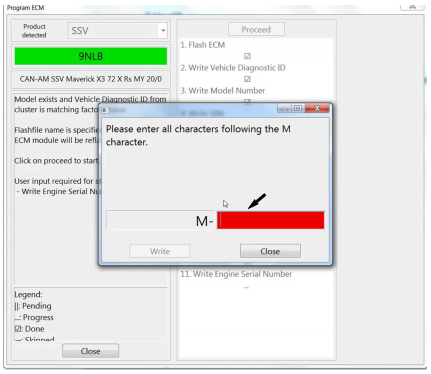

8. Click **Write**, then **Close**.

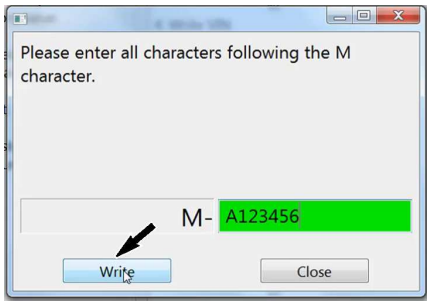


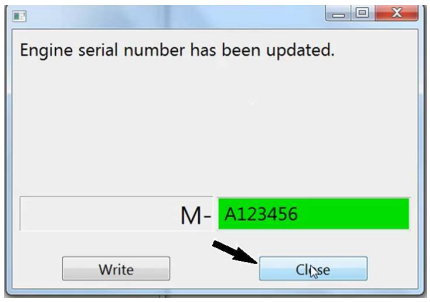


9. A message confirms that the engine identification number is entered. Close the window.

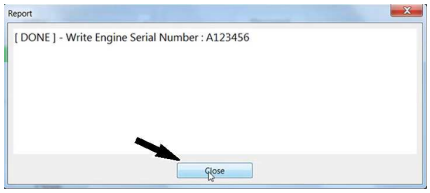


10. If the procedure is successful, the following window will show up. Close it.

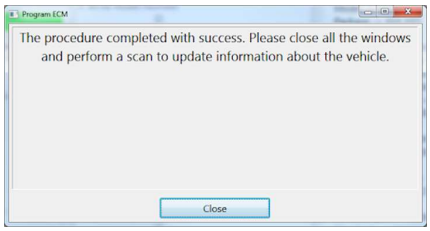


11. **Scan** the vehicle again.
12. Go to:

    – **Summary** page
    – **Vehicle** button
    – **Summary** tab.

13. Validate the following:

    – Vehicle Identification Number (VIN)
    – Vehicle Model Number
    – Engine Serial Number

    **Last Service Hour** and **Maintenance Hour** are reset to **0h00**.

    The **Engine Total Hour** and **Vehicle Total Hour** can **NOT** be reset to **0h00** and will always remain at the value before the time of resetting as new.

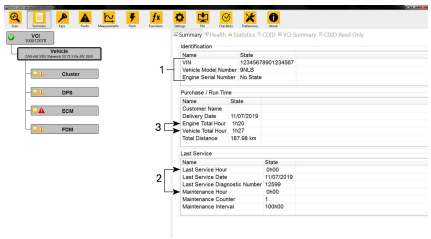

1. *Vehicle information*
2. *Reset hour*
3. *Non reset hour*

14. Install all ECM updates available for the vehicle.
15. Reset fault codes. If fault codes are generated, carry out the required service actions.
16. Perform key programming.
17. Start the engine and make sure it operates properly throughout its full engine RPM.

### *Reset the ECM as a Service Part*

1. Connect the vehicle to the BRP diagnostic software (BUDS2).
2. In BUDS2, go to:

    – **Settings** page
    – **Vehicle** button.

3. Double click on **Tools** - Reset the ECM as a Service Part.

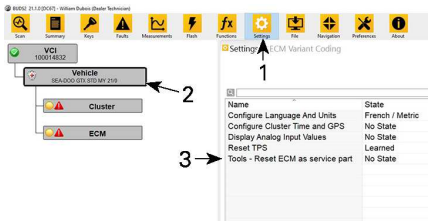


1. ***Settings** page*
2. ***Vehicle** button*
3. ***Tools***

4. Click on **Proceed**.

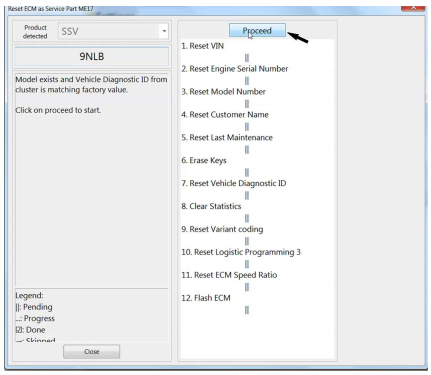

All boxes are checked when the ECM reset is completed.

5. Close the window.

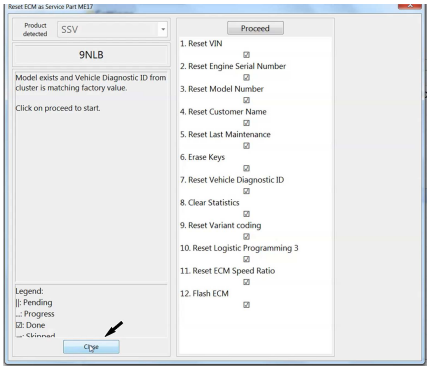


6. **Scan** the vehicle again.
7. Go to:
   - **Summary** page
   - **Vehicle** button
   - **Health** tab.

   Validate the following to confirm that the ECM reset has succeeded:
   - No vehicle description in the **Vehicle** button
   - In the description field, **Program ECM to latest available configuration**.




1. ***Vehicle*** *button*
2. *Description field*

03

# FUEL SYSTEM

# 03 Fuel System

# Electronic Fuel Injection (EFI) - GEN1

## SERVICE TOOLS

| Description | Part Number | Page |
|---|---|---|
| ECM ADAPTER TOOL GEN2 | (P/N 529036513) | 335, 342 |
| ECM ADAPTER TOOL | (P/N 529036166) | 320, 327 |
| FLUKE 115 MULTIMETER | (P/N 529035868) | 320–321, 328, 335, 343 |
| FUEL HOSE DISCONNECT TOOL | (P/N 529036037) | 322, 336 |

## SERVICE PRODUCTS

| Description | Part Number | Page |
|---|---|---|
| ENGINE OIL | | 323, 337 |

## General

This section refers to the following ECM:

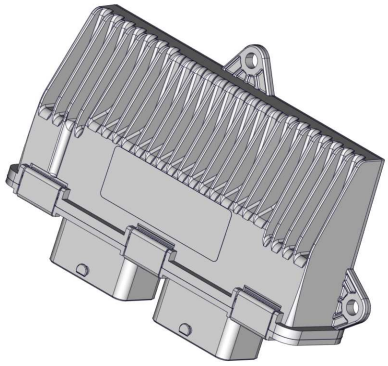

*ECM GEN1 – ME17*

**⚠ WARNING**

**When electrically disconnecting or removing the throttle body from the intake manifold, always remove the tether cord from the engine cut-off switch and disconnect the battery.**

**⚠ WARNING**

**Always disconnect battery prior to working on the fuel system. Always disconnect battery exactly in the specified order, BLACK (-) cable first. Electrical connections should be disconnected prior to disconnecting fuel lines.**

**⚠ WARNING**

**Fuel is flammable and explosive under certain conditions. Work in a well ventilated area. Do not smoke or allow open flames or sparks in the vicinity.**

**⚠ WARNING**

**Proceed with care and use appropriate safety equipment when working on the fuel system. Wipe off any fuel spillage in the engine compartment. Do not allow fuel to spill on hot engine parts and/or on electrical connectors.**

Cover the fuel line connection with an absorbent shop rag before disconnecting them. Slowly disconnect the fuel hose to minimize spilling.

**⚠ WARNING**

**Replace any damaged, leaking or deteriorated fuel lines or connections. After working on the fuel system, always pressurize the fuel system and check for fuel leaks. Refer to *Fuel System Pressurization* in *Fuel Tank and Fuel Pump* subsection.**

### *System Description*

The electronic fuel injection system (EFI) is comprised of various sensors used for detecting ongoing operating conditions of the engine and vehicle, and includes all the components that perform the required adjustments to the engine.

### *Electrical System*

### *EFI Sensors*

To control the injection system, the engine management uses input signals from the following sensors:

- Camshaft position sensor (CAPS)
- Crankshaft position sensor (CPS)
- Manifold absolute pressure and temperature sensor (MAPTS)
- Throttle position sensor (TPS) which is integrated to the throttle body (Electronic Throttle Control (ETC))
- Throttle accelerator sensor (TAS)
- Coolant Temperature Sensor (CTS)
- Oil Pressure Sensor (OPS).

Refer to *Engine Management System (EMS)* subsection for more information.

### *Air Intake System*

### *Air Filter*

Air flows through a mesh screen filter in the air intake silencer mounted over the engine. The mesh filter prevents snow from being drawn into the engine.

### *Turbo models*

After it passes through the mesh filter, an air duct (intake adapter) is used to channel the air to the turbocharger.

The intercooler then cools the air before going to the throttle body.

### *All models*

Air is then drawn in through the throttle body, the air intake manifold and into the engine.

Manifold absolute pressure and temperature are measured in the intake manifold.

### *Naturally aspirated models*

Refer to *Air Intake System* subsections for more information.

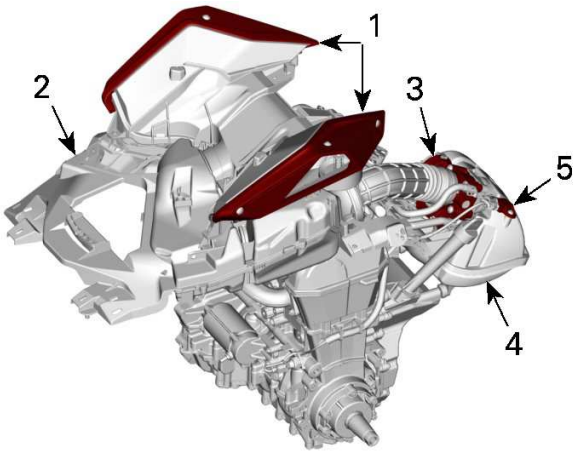


***TYPICAL***
1. *Mesh screen filter*
2. *Air intake silencer*
3. *Throttle body (Electronic Throttle Control (ETC))*
4. *Intake manifold*
5. *Manifold absolute pressure and temperature sensor (MAPTS)*

### *Turbo models*

Refer to *Air Intake System*, *Intercooler* and *Turbocharger - GEN1* subsections for more information.

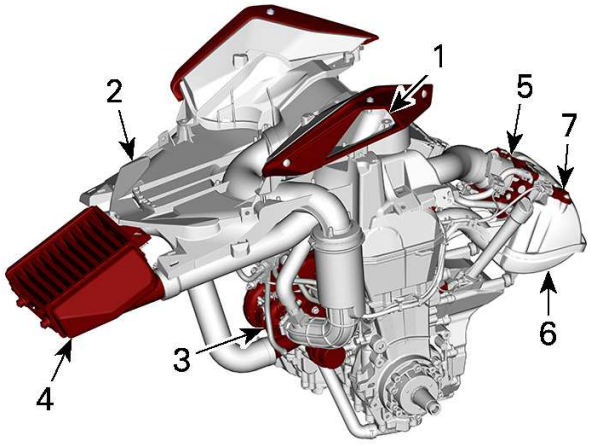


1. *Mesh screen filter*
2. *Air intake silencer*
3. *Turbocharger*
4. *Intercooler*
5. *Throttle body (Electronic Throttle Control (ETC))*
6. *Intake manifold*
7. *Manifold absolute pressure and temperature sensor (MAPTS)*

### *Throttle Body ((ETC) Electronic Throttle Control)*

Air for combustion is drawn in by the engine. The air flows through the throttle body (ETC) and is controlled by a throttle plate.

The Electronic Throttle Control (ETC) is a heated single throttle body with integrated dual throttle position sensors (TPS) and electric throttle actuator (ETA) and is mounted on the intake manifold.

The ETA allows the ECM to electronically control the throttle plate opening which regulates the amount of air that enters the engine, and therefore engine speed.

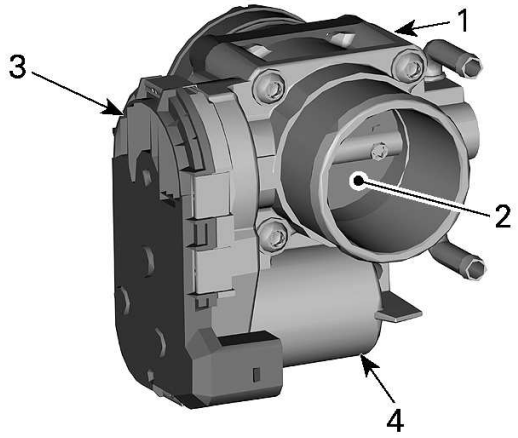


***ELECTRONIC THROTTLE CONTROL (ETC)***
1. *Throttle body (ETC)*
2. *Throttle plate*
3. *Dual Throttle Position Sensor (TPS)*
4. *Electric throttle actuator (ETA) (electric motor)*

Engine coolant flows through the throttle body (ETC) to prevent potential freezing of the throttle plate.

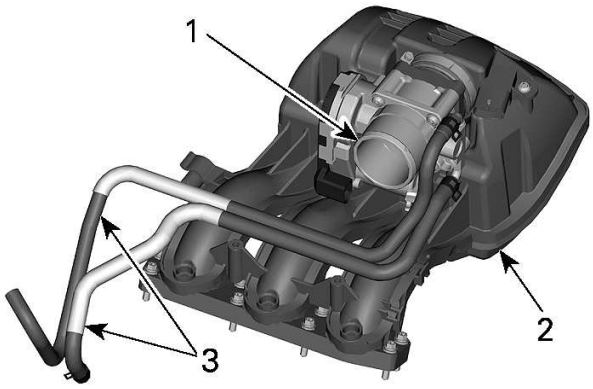


***TYPICAL - 900 ACE SHOWN***
1. *Throttle body (ETC)*
2. *Intake manifold*
3. *Coolant-heated lines*

Refer to *Intelligent Throttle Control (iTC)* subsection for more information.

### *Fuel System*

#### *Fuel Rail*

A fuel rail is mounted on the intake manifold. The fuel rail, which is used to secure the injectors to the manifold, also provides to the injectors the fuel pressure that it receives from the fuel pump.

The fuel pressure applied to the fuel rail is regulated by the fuel pressure regulator located in the fuel pump module.

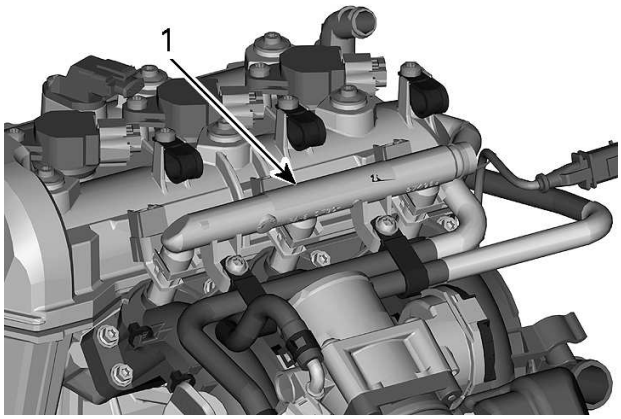


***TYPICAL - 900 ACE ENGINE SHOWN***
1. *Fuel rail*

#### *Fuel Injectors*

Each cylinder is supplied by its own injector that injects the fuel into the intake ports of the cylinder head.

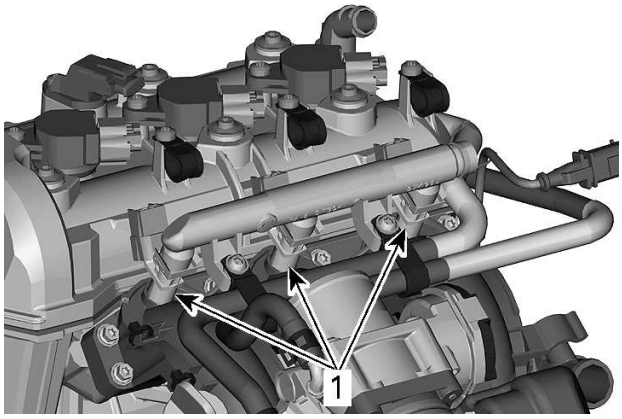


***TYPICAL - 900 ACE ENGINE SHOWN***
1. *Fuel injectors*

Fuel is injected in accordance with injection signals received from the ECM.

#### *Fuel Pump*

An electric fuel pump with an integrated pressure regulator and fuel system filters is used. For more details on the fuel pump unit, refer to *Fuel Tank and Fuel Pump* subsection.

## Idle Speed

Idle speed is not adjustable. The EMS (Engine Management System) controls the idle speed of the engine through the iTC system by controlling throttle plate opening using the ETA (electric throttle actuator).

The engine RPM may also be verified using the BRP diagnostic software (BUDS2).

In BUDS2, go to:

– **Measurements** page
– **ECM** button.

**NOTE:** The multifunction gauge and the BRP diagnostic software (BUDS2) use the same signal to provide the engine RPM indication.

## Troubleshooting

### *Diagnostic Tips*

Engine problems are not necessarily related to the fuel injection system.

It is important to ensure that the engine and propulsion system, fuel delivery and electrical systems are functioning normally.

For diagnostics purposes, use the BRP diagnostic software (BUDS2).

After a problem has been solved, be sure to clear the fault(s) recorded in the ECM using the BRP diagnostic software.

**⚠ WARNING**

**Electrical actuators and electronic modules may be powered up as soon as the START/STOP button is depressed. Always disconnect the battery prior to disconnecting any electrical or electronic parts.**

Never use a battery charger to temporarily substitute the battery as it may cause the ECM to function erratically, or not at all.

Check related-circuit fuse solidity and condition with an ohmmeter. A visual inspection could lead to a false diagnosis.

### *Poor Idling*

If poor idling is experienced, check the following:

- Poor quality fuel or water in the fuel
- Fault codes using BUDS2
- Throttle body cleanliness
- Engine leaks or other mechanical problem.

### *Electrical Related Problems*

It is important to check the following in the electrical system:

- Battery voltage
- Fuses
- Ground connections
- Wiring and connectors.

Ensure that all electronic components are original BRP recommended components. Any modification to the wiring harness may lead to poor system operation or generate fault codes.

### *Electrical Connections*

Pay particular attention to ensure that terminals and pins are not out of their connectors, corroded, or out of shape.

When probing terminals, pay attention not to deform the terminals as this could cause a loose or intermittent connection that would be difficult to troubleshoot.

**NOTE:** Do not apply dielectric grease or other lubricants on the ECM connectors.

## Procedures

### *Fuel Injector*

### *Fuel Injector Connector Location*

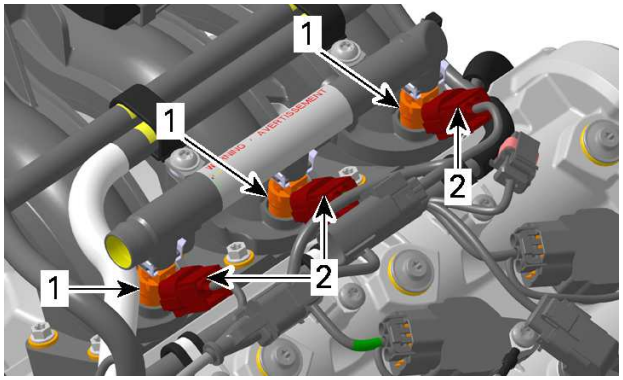


***900 ACE ENGINE SHOWN***
1. *Fuel Injectors*
2. *Fuel Injector connectors*

### *Testing the Fuel Injector Operation Using BUDS2 (Dynamic)*

**NOTE:** As a first troubleshooting step, always check for applicable fault codes using the BRP diagnostic software (BUDS2).

1. Connect the vehicle to the BRP diagnostic software (BUDS2).
2. Start engine.
3. In BUDS2, select the following:
   - **Functions** page
   - **ECM** button
   - **Activators** tab.
4. Select an injector.
5. Repeat for all injectors.
6. If the engine RPM drops momentarily when clicking on a cylinder, the injector on this cylinder is functioning normally.
7. If the engine RPM does not drop momentarily when clicking on a cylinder, this cylinder is not functioning properly. Check the following:
   - Fuel injector operation. Refer to *Testing the Fuel Injector Balance Using BUDS2*
   - Spark plug and ignition coil. Refer to *Ignition Coils and Spark Plugs - GEN1* subsection.
   - Engine condition.

### *Testing the Fuel Injector Balance Using BUDS2*

**NOTICE**

**After fuel injector activation using BUDS2, always crank engine in drowned mode to ventilate the engine of fuel.**

1. Install a fuel pressure gauge as described in *Testing the Fuel Pump Pressure* of *Fuel Tank and Fuel Pump* subsection.
2. Connect the vehicle to the BRP diagnostic software (BUDS2).
3. Press the Start button to activate the ECM.
4. In BUDS2, select the following:
   - **Functions** page
   - **ECM** button
   - **Functions** tab
   - **IO Controls - Activate Fuel Pump**.
5. Click on the **ACTIVATE** button to activate fuel pump.
6. Fuel pressure must be within specification. Refer to *Fuel Tank and Fuel Pump* subsection. Re-activate fuel pump as necessary.
7. In BUDS2, energize fuel injector 1.
8. Record the fuel pressure drop for injector 1.
9. Re-activate fuel pump.
10. Repeat the procedure for fuel injector 2 and 3 and record the pressure drop for each injector.
11. The maximum fuel pressure drop between injectors should not exceed the following specification:

| Maximum Fuel Pressure Drop Allowed Between Fuel Injectors |
|---|
| 10 kPa (1.5 lbf/in²) |

12. If the pressure drop between fuel injectors is greater than the specification, replace the injector with the least pressure drop, then repeat the test.
13. Using the valve on the fuel pressure gauge, release the pressure in the system (if so equipped).
14. Remove fuel pressure gauge and reinstall removed parts.
15. Crank engine in drowned mode (accelerator held all the way in) to ventilate the engine of the fuel that was injected during the test.

**⚠ WARNING**

**Always crank engine in drowned mode to ventilate all fuel that was injected during the test. Failure to do so may result in severe engine damage and injury.**

### *Testing for Fuel Injector Leakage*

### *Test Setup*

1. Ensure there is enough fuel in fuel tank.
2. Ensure fuel pressure from fuel pump is within specification. Refer to *Fuel Tank and Fuel Pump* subsection.

**NOTE:** Keep the pressure gauge installed for the leakage test.

3. Connect the vehicle to the BRP diagnostic software (BUDS2).
4. In BUDS2, go to:
   - **Functions** page
   - **Vehicle** or **ECM** button
   - **Functions** tab
   - **Execute Fuel Pressure Relief**.
5. Remove fuel rail with injectors from engine. However, **do not** disconnect fuel pump pressure hose from fuel rail. Refer to *FUEL injectors* in this subsection.
6. Position fuel rail so that an appropriate container may be placed under the injectors to collect any fuel leakage.

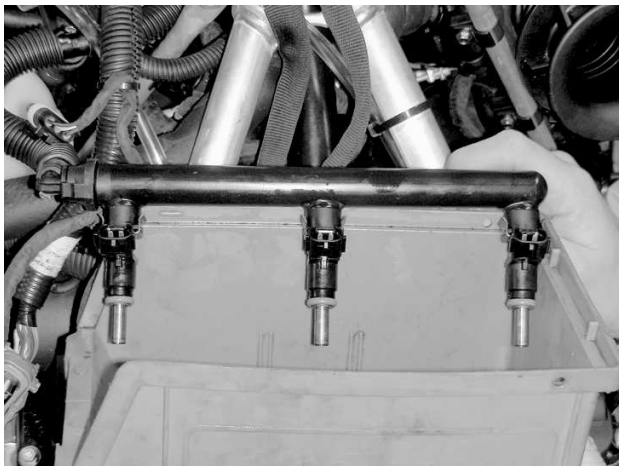

*TYPICAL - INJECTOR LEAKAGE TEST SETUP*

7. Install key on D.E.S.S. post.

### *Testing the Leakage*

1. In BUDS2, go to:
   - **Functions** page
   - **Vehicle** or **ECM** button
   - **Functions** tab
   - **IO - Activate Fuel Pump**.
2. Check for fuel leakage from the injector nozzles.
3. Monitor fuel pressure at fuel pressure gauge. If pressure drops below 372 kPa (54 lbf/in²) during the test, reactivate fuel pump as necessary.

| Fuel Injector Leak Test | |
|---|---|
| **Test Duration** | **Specification** |
| 2 minutes | 1 drop per minute maximum |

4. If test is not within specification, replace the faulty fuel injector.
5. Properly reinstall fuel rail. Refer to *Fuel Rail* in this subsection.
6. Reinstall remaining removed components.

**⚠ WARNING**

**Wipe up any spilled fuel.**

### *Testing the Fuel Injector Resistance*

1. Ensure vehicle electrical power is off.
2. Disconnect ECM-A connector from the ECM and connect it to the ECM adapter tool. Refer to *Electronic Control Module (ECM) - GEN1* subsection.

| | |
|---|---|
| **Fluke 115 multimeter (P/N 529035868)** |  |
| **ECM adapter tool (P/N 529036166)** |  |

3. Remove cover from the fuse box and locate the fuel injector fuse.
4. Check resistance value between fuse box and ECM connector terminals as follows.

| Fuel Injector Resistance Test (600 ACE) | | | |
|---|---|---|---|
| **Inj.** | **ECM Adapter Pin** | **Inj. Fuse** | **Specification @ 20 °C (68 °F)** |
| 1 | J1 | Refer to the wiring diagram | 11.4 - 12.6 Ω |
| 2 | K1 | | |

| Fuel Injector Resistance Test (900 ACE) | | | |
|---|---|---|---|
| **Inj.** | **ECM Adapter Pin** | **Inj. Fuse** | **Specification @ 20 °C (68 °F)** |
| 1 | B3 | Refer to the wiring diagram | 11.4 - 12.6 Ω |
| 2 | K1 | | |
| 3 | J1 | | |

5. If reading is within specification, carry out *Testing the Fuel Injector Input Voltage*.
6. If reading is out of specification, repeat test at HIC connector located behind the ECM support Refer to *Wiring Harness and Connectors* subsection.

| Fuel Injector Resistance Test (600 ACE) | | | |
|---|---|---|---|
| **Inj.** | **ECM Adapter Pin** | **HIC pin** | **Specification @ 20 °C (68 °F)** |
| 1 | J1 | 2 | 11.4 - 12.6 Ω |
| 2 | K1 | | |

| Fuel Injector Resistance Test (900 ACE) | | | |
|---|---|---|---|
| **Inj.** | **ECM Adapter Pin** | **HIC Pin** | **Specification @ 20 °C (68 °F)** |
| 1 | B3 | 2 | 11.4 - 12.6 Ω |
| 2 | K1 | | |
| 3 | J1 | | |

7. If reading is out of specification, remove the injector connector and check resistance value between injector pins as follows.
8. If reading is within specification, check the wire continuity between the fuse box and the HIC. Repair the wire and/ or the connector as required.

| Fuel Injector Resistance Test | | |
|---|---|---|
| **Injector Pin** | | **Specification @ 20 °C (68 °F)** |
| 1 | 2 | 11.4 - 12.6 Ω |

9. If reading is out of specification, replace the injector.

### *Testing the Fuel Injector Input Voltage*

1. Ensure both ECM connectors are properly connected.
2. Ensure the HIC connector is properly connected.
3. Disconnect the fuel injector connector.

**NOTE:** Press against tab underneath connector as illustrated to unlock it.

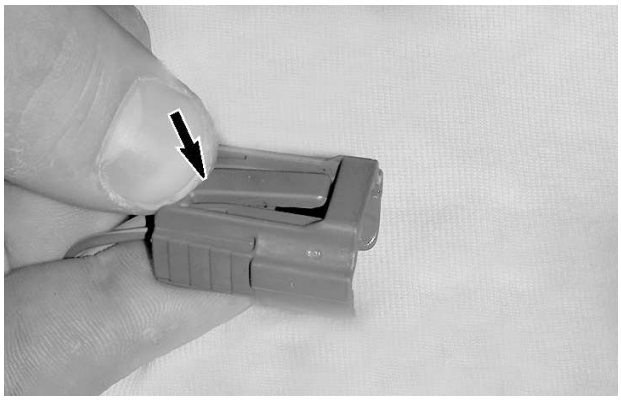

*PRESS HERE TO UNLOCK*

4. Ensure fuel injector fuse is properly installed. Refer to the appropriate wiring diagram.
5. Install key on D.E.S.S post.
6. Momentarily press the START/STOP button to wake up the ECM without holding the brakes.

**NOTE:** It is not necessary to activate the injector since it is continuously powered when the ECM is awake.

7. Set the multimeter to Vdc. Read voltage.

| **Fluke 115 multimeter (P/N 529035868)** |  |
|---|---|

| **Fuel Injector Input Voltage Test** | | | |
|---|---|---|---|
| **Inj.** | **Inj. Pin** | **Battery Post** | **Specification** |
| 1 | 2 | Negative (-) | Battery voltage |
| 2 | | | |
| 3 | | | |

8. If injector input voltage is good, carry out the following:
   - Circuit continuity test between injector and ECM, refer to *Wiring Diagram* subsection.
   - Test the injector signal, go to: *Testing the Fuel Injector Signal* subsection
9. If injector input voltage is not good, check the following:
   - Fuel injector fuse
   - Circuit continuity between fuel injector fuse and injector. Refer to *Power Distribution* and *Wiring Diagram* subsections.

### *Testing the Fuel Injector Signal*

1. Set multimeter to Vdc.

| **Fluke 115 multimeter (P/N 529035868)** |  |
|---|---|

**NOTE:** Make sure multimeter is in the **Auto Range** mode.

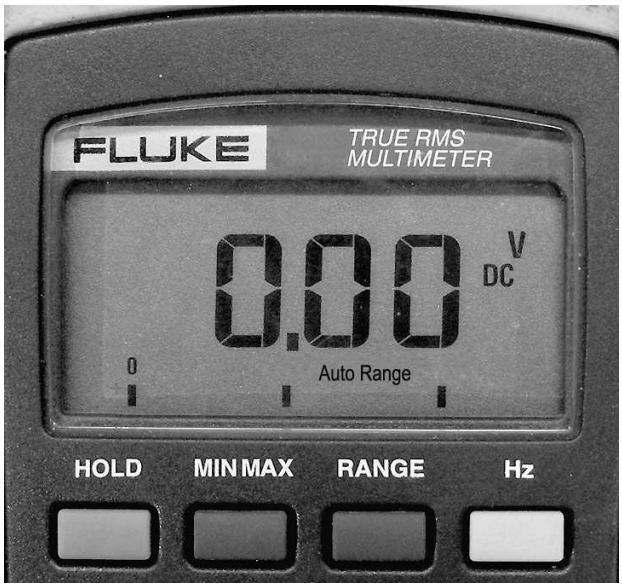


2. Press the **Hz** button so that the display shows Hz.

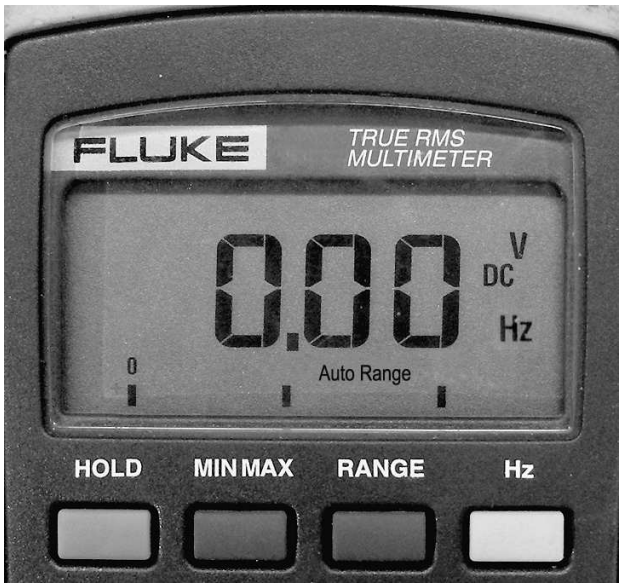


3. Connect the multimeter probes as indicated in the following table and using the BUDS2 software, activate each injector and read the frequency on the multimeter.

**NOTE:** The multimeter counts the pulses per seconds (Hertz) of current the ECM sends to the injector.

| Fuel Injector Signal Test | | | |
|---|---|---|---|
| **Inj.** | **Inj. Wire** | **Battery Post** | **Specification** |
| 1 | BN/ RD | Negative (-) | 9 Hz |
| 2 | BN/ BU | | |
| 3 | BN/ GY | | |

4. If reading is good, the control circuit is functional.
5. If there is no reading, check continuity of control circuit (ECM to injectors). Refer to *Wiring Diagram* for circuit details.

### *Removing the Fuel Injector*

1. Connect the vehicle to the BRP diagnostic software (BUDS2).
2. In BUDS2, go to:
   - **Functions** page
   - **Vehicle** or **ECM** button
   - **Functions** tab
   - **Execute Fuel Pressure Relief**.
3. Disconnect the battery, refer to *Charging System* subsection.

**⚠ WARNING**

**When removing or disconnecting the fuel injectors, always disconnect the battery.**

4. Remove parts required for access to the fuel rail and fuel injectors.
5. Disconnect the fuel injector electrical connectors.
6. Disconnect the fuel pressure hose from the fuel rail.

| | |
|---|---|
| **Fuel hose disconnect tool (P/N 529036037)** |  |



**NOTE:** Wrap a rag around the hose end to catch any fuel leakage.

7. Remove the fuel rail mounting screws.

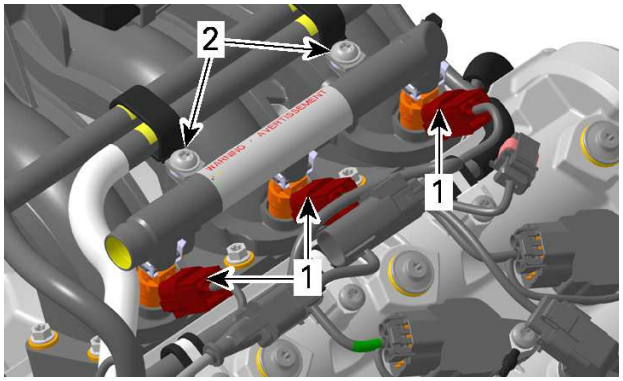


***900 ACE ENGINE SHOWN***
*1. Injector connectors*
*2. Fuel rail mounting screws*

8. Pull on fuel rail to remove the fuel rail and injectors from the engine.
9. Remove the fuel injector retaining clips from the fuel rail.

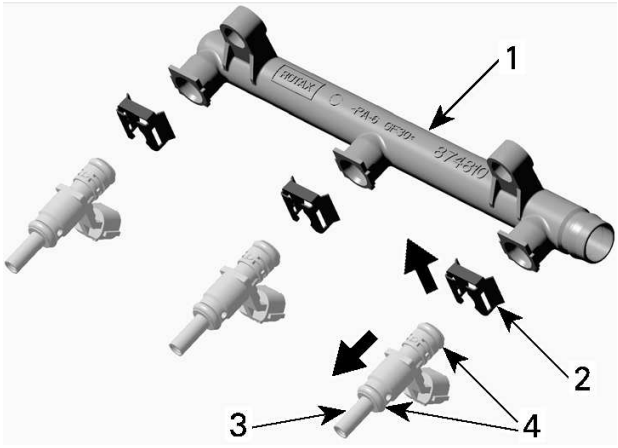


*TYPICAL - 900 ACE SHOWN*
1. *Fuel rail*
2. *Fuel injector retaining clip*
3. *Injector*
4. *Injector O-rings*

10. Pull the fuel injector(s) out of the fuel rail.
11. Remove and discard injector O-rings.

### *Installing the Fuel Injector*

The installation is the reverse of the removal procedure. However, pay attention to the following.

1. Install **NEW** O-rings on fuel injector(s).
2. Apply a thin film of engine oil to O-rings to ease insertion in rail.

| Engine oil |
|---|

3. Install fuel injector with your hand. Do not use any tool.
4. Firmly push injector until it bottoms out.
5. Install fuel rail.

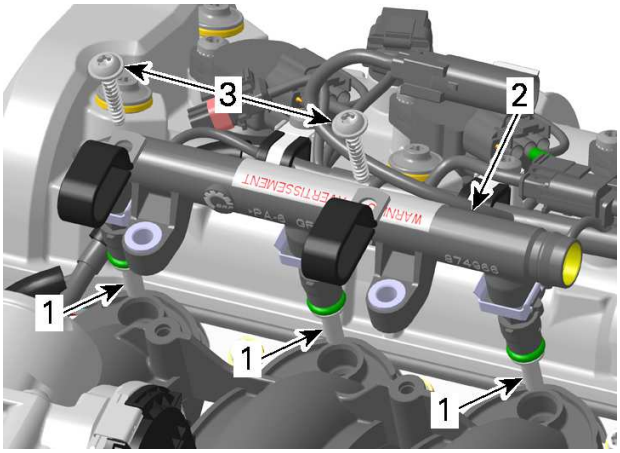


*TYPICAL - 900 ACE ENGINE SHOWN*
1. *Fuel injectors*
2. *Fuel rail*
3. *Fuel rail retaining screws*

| Tightening Torque | |
|---|---|
| Fuel rail retaining screw | 9 ± 1 Nm (80 ± 9 lbf-in) |

6. Apply engine oil on O-rings of fuel pressure hose fitting.

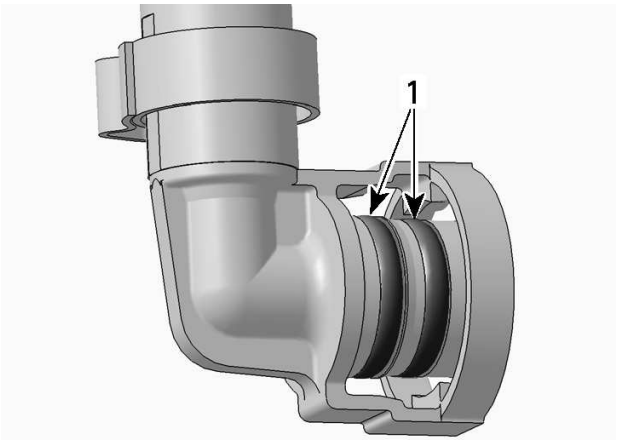


*FUEL PRESSURE HOSE FITTING*
1. *Apply oil on O-rings*

7. Connect fuel pressure hose to fuel rail.

**IMPORTANT**: Push fuel hose fitting on fuel rail until you hear a "click". Try pulling on fuel hose fitting to ensure it is properly locked.

Pressurize the fuel system and check for fuel leaks. Refer to *Fuel System Pressurization* in *Fuel Tank and Fuel Pump* subsection.

**⚠ WARNING**

**Failure to pressurize the fuel system and checking for fuel leaks may result in severe injury or a life threatening situation should a leak occur.**

8. Reinstall all remaining removed parts.

### *Throttle Body (Electronic Throttle Control (Etc))*

### *Throttle Body (ETC) Description*

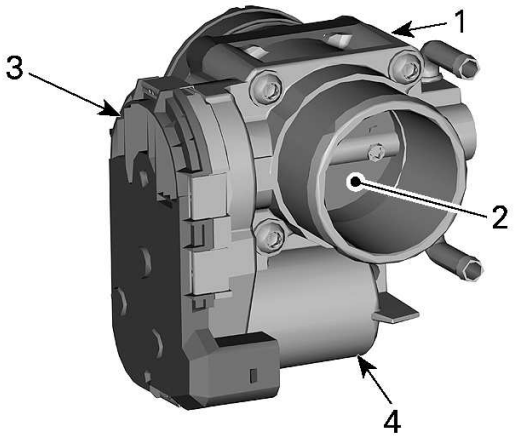


1. *Throttle body*
2. *Throttle plate*
3. *TPS (Throttle Position Sensor) (inside)*
4. *ETA (Electric Throttle Actuator) (electric motor inside)*

### *Electric Throttle Actuator (ETA)*

The electric throttle actuator (ETA) is a DC motor on the throttle body that regulates the throttle plate via a drive gear. It receives its control signal from the ECM. Pulse width modulation (PWM) is used to control the motor.

### *Throttle Plate Operating Positions*

1. Two torsional springs are connected to the throttle plate. A main spring and another one in a plunger mechanism.
2. When there is no power to the throttle actuator (ETA), the plunger mechanism maintains the throttle plate at a rest position. This also serves as the limp home position.
3. When the throttle plate is opened by the ETA as commanded by the ECM, it acts against the main spring. If the ETA failed, the return spring would bring the throttle plate back to the limp home position.

| ECM | Engine | Throttle Body |
|---|---|---|
| OFF | Stopped | Throttle actuator: Off. Throttle plate: Rest position, maintained opened at approximately 8° (1). This is also the limp home position. |
| ON | Not started | Throttle actuator: On. Throttle plate: Moves from the rest position to approximately 15°. It then moves back to the rest position. This is the diagnostic mode where the rest position, actuator opening force to overcome the return springs and the motor return rate are monitored. If any of these parameters are out of range, a fault code is initiated. |
| ON | Not started. Very cold environ ment | Throttle actuator: On. Throttle plate: Execute check for ice on throttle plate. If throttle plate does not reach the fully closed position, throttle plate is moving until closed position can be reached. |
| ON | Started. Normal operation at idle | Throttle actuator: On. Throttle plate: Moves from the rest position to idle position (approximately 1-3°) according to ECM injection and ignition maps. Throttle plate is opened and closed as necessary to control the idle speed. |
| ON | Started. Normal operation at various RPM | Throttle actuator: On. Throttle plate: Opens and closes according to ECM torque management priorities. |
| (1) Degree values are given from the fully closed position. | | |

### *Throttle Body (ETC) Faults and Effects*

**NOTE:** Among other things, a weak or broken spring and a sticky throttle plate are validated by the throttle body diagnostic mode.

| Fault | Effect |
|---|---|
| Partial failure of TAS sensor (one internal sensor only) | Limp home mode. Engine speed limited to idle.<br>ECM will use the remaining TAS sensor.<br>Fault code set and beeper activated to emit warning signals.<br>Check engine light is turned ON.<br>Driveability could be reset by releasing and reapplying the throttle. |
| Complete failure of TAS sensor (both internal sensors) | Limp home mode. Engine speed limited to 2500 RPM.<br>Fault code set and beeper activated to emit warning signals.<br>Check engine light is turned ON. |
| Any throttle body failure | Limp home mode. Engine speed limited to 2500 RPM.<br>Engine speed can still be increased up to 3200 RPM using the throttle lever.<br>Fault code set and beeper activated to emit warning signals.<br>Check engine light is turned ON. |

**NOTE:** Refer to *Diagnostic and Fault Codes* and *Intelligent Throttle Control* (iTC) subsections for more informations.

### *Lubricating the Throttle Body (ETC)*

No lubrication is required.

### *Testing the Electric Throttle Actuator (ETA)*

#### *Electric Throttle Actuator (ETA) Test with BUDS2*

1. Connect the vehicle to the BRP diagnostic software (BUDS2).
2. Install key on D.E.S.S. post.
3. Press the START/STOP button without holding the brakes to wake up the ECM.
4. In BUDS2, go to:
   - **Measurements** page
   - **ECM** button
   - **Presets** and **ECM - BASIC** tabs
   - **Throttle Opening**.
5. Slowly depress the throttle to WOT. The ETA should go from approximately 10% to 100%.

   If result is out of specification, carry out a *Throttle Position Sensor Initialization*. Refer to *Throttle Position Sensor (TPS)* in this subsection.

**NOTE:** The ETA is reset at the same time as the TPS.

6. After the reset, test ETA again.

   If the result is still out of specification, check wire continuity between ECM and throttle body before assuming the ETA is at fault.

### *Inspecting the Throttle Body (ETC)*

1. Remove parts required to access throttle body.
2. Carry out the following:
   - Inspect throttle body for cleanliness.
   - Ensure throttle plate opens fully and smoothly.
   - Check for corroded or damaged wiring or damaged ETC connectors.

### *Testing the Throttle Body (ETC) (Dynamic)*

1. Remove the parts required to access the throttle body (ETC).
2. Remove the air inlet hose from the throttle body.
3. Observe the throttle plate with the engine stopped.

   The throttle plate should be in the rest position (slightly opened).

**⚠ CAUTION**

**Keep your fingers out of the throttle plate area while the ECM turns on. The throttle actuator will cycle. This could cause serious finger injuries as throttle plate quickly moves.**

4. As you observe the throttle plate, have someone press the START/STOP button to wake up the ECM.

   The throttle plate should cycle quickly from the rest position to a partially open position (approximately 15°), then back to the rest position.
5. Install the tether cord on the D.E.S.S. post.

   The throttle plate should cycle again.
6. As you observe the throttle plate, have someone gradually and evenly pull in the throttle lever, then release it in the same way.

The throttle plate should open then close according to throttle lever position however, the movement of the throttle plate may not be linear with the displacement of the throttle lever.

7. If any test failed, proceed with *Testing the Throttle Body (ETC) (static).*

### *Testing the Throttle Body (ETC) (Static)*

**⚠ CAUTION**

**First ensure the ECM is off. Do not move the throttle plate using your fingers. Otherwise, should the START/STOP button be pressed, the ECM would turn on and quickly cycle the throttle plate which could cause serious finger injury.**

1. Using a blunt tool, push in on the throttle plate and ensure it opens smoothly within the throttle body.

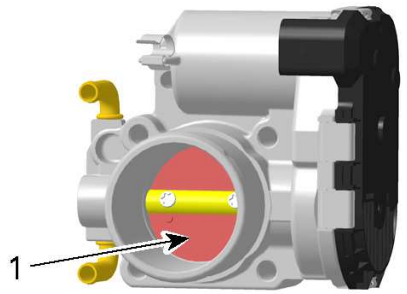


*1. Push here to open*

**NOTE:** The throttle plate must open fully and return freely to the rest position (slightly opened) when released.

2. Push throttle plate closed as indicated in following illustration. It must close completely and return freely to the rest position (slightly opened) when released.

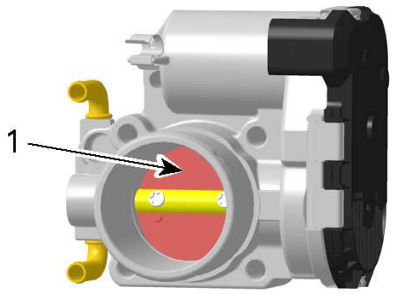


*1. Push here to close*

3. If the throttle plate does not move smoothly or does not return freely to the rest position, the problem is mechanical. Check for dirt accumulation on throttle plate shaft. It may also be an actuator or gear problem. Replace throttle body as necessary.
4. If throttle plate operates normally, the problem is electrical. Check electric throttle actuator (ETA) wiring continuity, throttle position sensor (TPS) and throttle accelerator sensor (TAS).

### *Cleaning the Throttle Body (ETC)*

1. Remove throttle body from intake manifold.
2. Check throttle body cleanliness using a flashlight. Fully open throttle plate and verify:
   - Throttle body bore
   - Throttle plate edge.

   Look for:
   - Dirt
   - Oily surfaces
   - Carbon and dirt deposits on throttle plate and the surrounding bore.
3. Clean as necessary.

**NOTICE**

**Only use an appropriate throttle body cleaner that will not damage O-rings and EFI sensors.**

4. To avoid getting dirt into engine, spray cleaner on a clean rag then rub rag against throttle plate and bore. A toothbrush may also be used.
5. Gently open throttle plate and hold fully open to clean all surfaces.
6. To remove residual dirt, spray cleaner on throttle plate and throttle bore.
7. Reinstall all removed parts.

### *Removing the Throttle Body (ETC)*

**⚠ CAUTION**

**Ensure the key is removed from D.E.S.S. post and battery cables are disconnected so that nobody can activate the electrical system, otherwise the ECM would turn on and the throttle actuator (ETA) would cycle. This could cause serious finger injury as the throttle plate moves quickly.**

1. Remove parts required to access throttle body.
2. Block coolant hoses connected to throttle body and remove them. Refer to *Intake Manifold - GEN1* subsection.

3. Disconnect ETC connector.
4. Loosen gear clamp.
5. Remove throttle body with connecting socket from intake manifold.

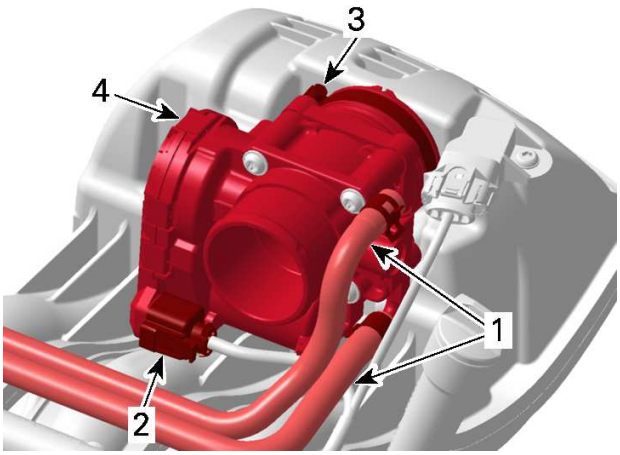


***900 ACE ENGINE SHOWN***
1. *Coolant hoses*
2. *ETC connector*
3. *Gear clamp*
4. *Throttle body with connecting socket*

### *Installing the Throttle Body (ETC)*

The installation is the reverse of the removal procedure. However, pay attention for the following.

1. Refill and bleed cooling system. Refer to *Cooling System - Vehicle Components* subsection.
2. Perform the *Throttle Position Sensor Initialization* reset procedure. Refer to *Throttle Position Sensor (TPS)* in this subsection.
3. Install all remaining removed parts, refer to applicable subsections.
4. Start engine and ensure proper idle and throttle control.

### *Throttle Position Sensor (TPS)*

#### *TPS Description*

1. The TPS is part of the throttle body (ETC).
2. The throttle position sensor (TPS) is a double potentiometer that sends signals to the ECM that are proportional to the throttle plate angle.
3. As a first troubleshooting step, always check for applicable fault codes using the BRP diagnostic software (BUDS2).

#### *Throttle Position Sensor Initialization*

**NOTE:** The TPS initialization procedure **must** be carried out whenever the throttle body (ETC) is replaced.

This operation performs a reset of the TPS basic values in the ECM. This reset is very important as the TPS values are part of the basic parameters for all fuel mapping calculations and control of several settings such as for idle speed, LIMP HOME mode and maximum RPM of the engine.

**NOTICE**

**An improperly set TPS may lead to improper idle speed (too low or too high), poor engine performance, poor engine starting and engine stop on deceleration, fault codes and possible engine damage. Emission compliance may also be affected.**

1. Install key on D.E.S.S. post.
2. Press the START/STOP button to wake up the ECM.
3. Ensure accelerator pedal is completely released.
4. Connect the vehicle to the BRP diagnostic software (BUDS2).
5. In BUDS2, select
   - **Settings** button
   - **ECM** page tab
   - **Settings** page
   - **Initialization - Reset TPS**.
6. In the **Reset TPS** box, click on the **Reset** button.

   A message will be displayed if the operation is successful.

   If an error occurred or the TPS is not within the allowed range while resetting, the ECM will generate a fault code and will not accept the setting.
7. Start engine and make sure it operates normally through its full engine RPM range.
8. Check for fault codes using BUDS2, If a fault code related to the throttle actuator appears, clear it, then carry out another Closed Throttle Reset procedure. To clear faults, refer to *diagnostic and fault codes* subsection.

#### *Testing the TPS Resistance*

1. Ensure the throttle body connector is properly connected.
2. Disconnect ECM connector A from the ECM and install it on the ECM adapter tool.

| | |
|---|---|
| **ECM adapter tool (P/N 529036166)** |  |

3. Set multimeter to Ω.

| | |
|---|---|
| **Fluke 115 multimeter (P/N 529035868)** |  |

4. Probe circuit as per following table while using your hand to manually move throttle plate.

| TPS Resistance Test | | | | | |
|---|---|---|---|---|---|
| **ECM Adapter** | | **Fully Closed Throttle Plate (1)** | | **Fully Open Throttle Plate** | |
| | | **Resistance (Ω)** | | | |
| **Pin** | | **Min.** | **Max.** | **Min.** | **Max.** |
| A-A2 | A-K4 | 875 | 1625 | 875 | 1625 |
| A-A2 | A-K3 | 954 | 1934 | 228 | 585 |
| A-A2 | A-F3 | 254 | 634 | 980 | 1983 |
| A-K3 | A-K4 | 228 | 585 | 954 | 1934 |
| A-K3 | A-F3 | 1385 | 2315 | 1385 | 2315 |
| A-K4 | A-F3 | 980 | 1983 | 254 | 634 |
| (1) To obtain the fully closed position, it is necessary to push against the throttle plate in the throttle body with your hand and hold it in this position for the measurement. | | | | | |

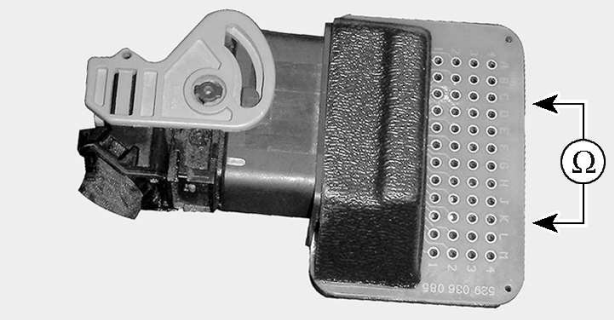


5. If any resistance value is incorrect, check wire continuity between ECM and throttle body before assuming the TPS is at fault. Refer to *Wiring Diagram* subsection.

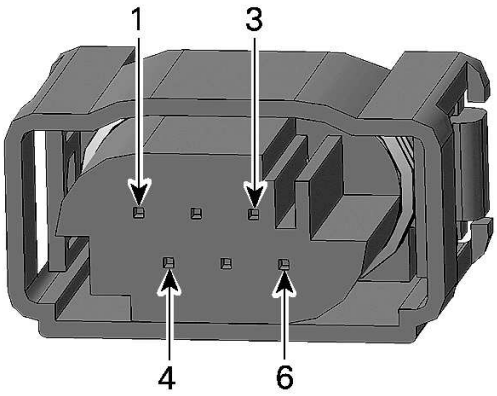


*THROTTLE BODY CONNECTOR PIN-OUT*

# Electronic Fuel Injection (EFI) – GEN2

## SERVICE TOOLS

| Description | Part Number | Page |
|---|---|---|
| ECM ADAPTER TOOL GEN2 | (P/N 529036513) | 335, 342 |
| ECM ADAPTER TOOL | (P/N 529036166) | 320, 327 |
| FLUKE 115 MULTIMETER | (P/N 529035868) | 320–321, 328, 335, 343 |
| FUEL HOSE DISCONNECT TOOL | (P/N 529036037) | 322, 336 |

## SERVICE PRODUCTS

| Description | Part Number | Page |
|---|---|---|
| ENGINE OIL | | 323, 337 |

## General

This section refers to the following ECM:

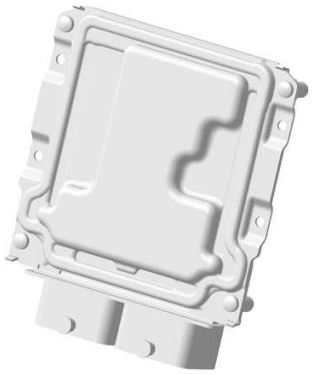

*ECM GEN2 – XCU*

**⚠ WARNING**

**When electrically disconnecting or removing the throttle body from the intake manifold, always remove the tether cord from the engine cut-off switch and disconnect the battery.**

**⚠ WARNING**

**Always disconnect battery prior to working on the fuel system. Always disconnect battery exactly in the specified order, BLACK (-) cable first. Electrical connections should be disconnected prior to disconnecting fuel lines.**

**⚠ WARNING**

**Fuel is flammable and explosive under certain conditions. Wear safety glasses and work in a well ventilated area. Do not smoke or allow open flames or sparks in the vicinity.**

**⚠ WARNING**

**Proceed with care and use appropriate safety equipment when working on the fuel system. Wipe off any fuel spillage in the engine compartment. Do not allow fuel to spill on hot engine parts and/or on electrical connectors.**

Cover the fuel line connection with an absorbent shop rag before disconnecting them. Slowly disconnect the fuel hose to minimize spilling.

**⚠ WARNING**

**Replace any damaged, leaking or deteriorated fuel lines or connections. After working on the fuel system, always pressurize the fuel system and check for fuel leaks. Refer to *Fuel System Pressurization* in *Fuel Tank and Fuel Pump* subsection.**

### *System Description*

The electronic fuel injection system (EFI) is comprised of various sensors used for detecting ongoing operating conditions of the engine and vehicle, and includes all the components that perform the required adjustments to the engine.

### *Electrical System*

### *EFI Sensors*

To control the injection system, the engine management uses input signals from the following sensors:

- Camshaft position sensor (CAPS)
- Crankshaft position sensor (CPS)
- Manifold absolute pressure and temperature sensor (MAPTS)
- Boost pressure sensor (BPS)
- Throttle position sensor (TPS) which is integrated to the throttle body (Electronic Throttle Control (ETC))
- Throttle accelerator sensor (TAS)
- Coolant Temperature Sensor (CTS)

Refer to *Engine Management System (EMS)* subsection for more information.

### *Air Intake System*

### *Air Filter*

Air flows through a mesh screen filter in the air intake silencer mounted over the engine. The mesh filter prevents snow from being drawn into the engine.

After it passes through the mesh filter, an air duct (intake adapter) is used to channel the air to the turbocharger.

The intercooler then cools the air before going to the throttle body.

Air is then drawn in through the throttle body, the air intake manifold and into the engine.

Manifold absolute pressure and temperature are measured in the intake manifold.

Refer to *Air Intake System*, *Intercooler* and *Turbocharger - GEN2* subsections for more information.

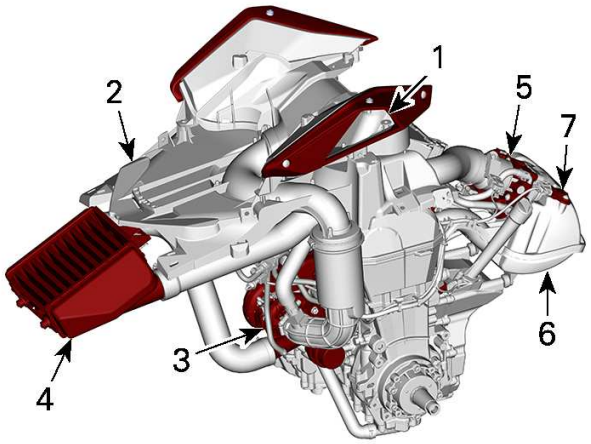


1. *Mesh screen filter*
2. *Air intake silencer*
3. *Turbocharger*
4. *Intercooler*
5. *Throttle body (Electronic Throttle Control (ETC))*
6. *Intake manifold*
7. *Manifold absolute pressure and temperature sensor (MAPTS)*

### *Throttle Body ((ETC) Electronic Throttle Control)*

Air for combustion is drawn in by the engine. The air flows through the throttle body (ETC) and is controlled by a throttle plate.

The Electronic Throttle Control (ETC) is a heated single throttle body with integrated dual throttle position sensors (TPS) and electric throttle actuator (ETA) and is mounted on the intake manifold.

The ETA allows the ECM to electronically control the throttle plate opening which regulates the amount of air that enters the engine, and therefore engine speed.

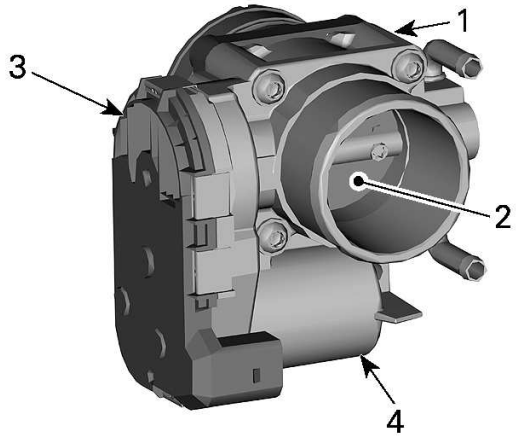


***ELECTRONIC THROTTLE CONTROL (ETC)***
1. *Throttle body (ETC)*
2. *Throttle plate*
3. *Dual Throttle Position Sensor (TPS)*
4. *Electric throttle actuator (ETA) (electric motor)*

Engine coolant flows through the throttle body (ETC) to prevent potential freezing of the throttle plate.

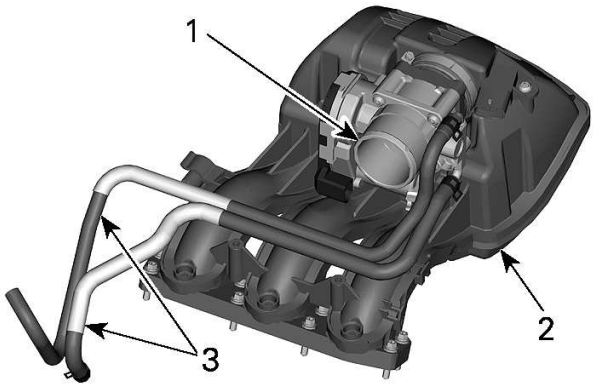


***TYPICAL - 900 ACE SHOWN***
1. *Throttle body (ETC)*
2. *Intake manifold*
3. *Coolant-heated lines*

Refer to *Intelligent Throttle Control (iTC)* subsection for more information.

### *Fuel System*

### *Fuel Rail*

A fuel rail is mounted on the intake manifold. The fuel rail, which is used to secure the injectors to the manifold, also provides to the injectors the fuel pressure that it receives from the fuel pump.

The fuel pressure applied to the fuel rail is regulated by the fuel pressure regulator located in the fuel pump module.

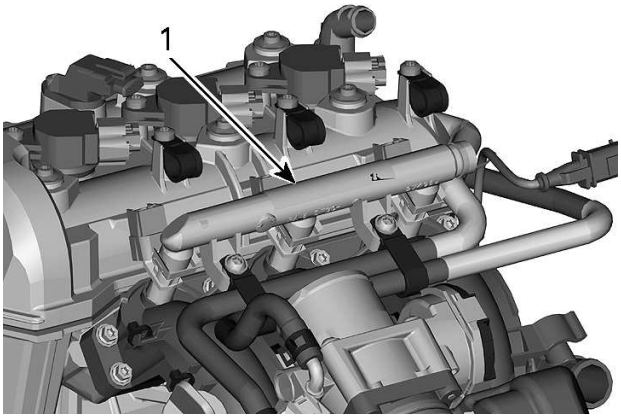


***TYPICAL - 900 ACE ENGINE SHOWN***
*1. Fuel rail*

### *Fuel Injectors*

Each cylinder is supplied by its own injector that injects the fuel into the intake ports of the cylinder head.

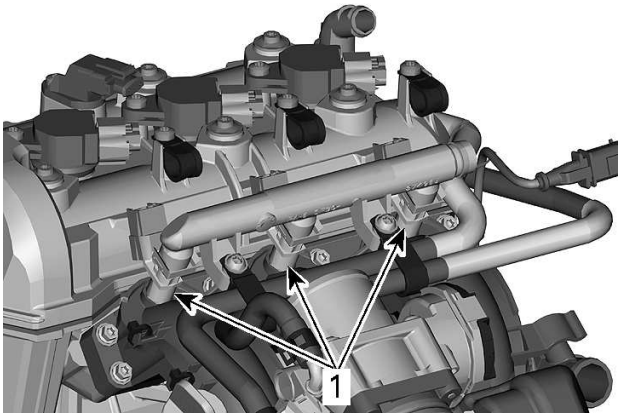


***TYPICAL - 900 ACE ENGINE SHOWN***
*1. Fuel injectors*

Fuel is injected in accordance with injection signals received from the ECM.

### *Fuel Pump*

An electric fuel pump with an integrated pressure regulator and fuel system filters is used. For more details on the fuel pump unit, refer to *Fuel Tank and Fuel Pump* subsection.

## Idle Speed

Idle speed is not adjustable. The EMS (Engine Management System) controls the idle speed of the engine through the iTC system by controlling throttle plate opening using the ETA (electric throttle actuator).

The engine RPM may also be verified using the BRP diagnostic software (BUDS2).

In BUDS2, go to:

– **Measurements** page
– **ECM** button.

**NOTE:** The multifunction gauge and the BRP diagnostic software (BUDS2) use the same signal to provide the engine RPM indication.

## Troubleshooting

### *Diagnostic Tips*

Engine problems are not necessarily related to the fuel injection system.

It is important to ensure that the engine and propulsion system, fuel delivery and electrical systems are functioning normally.

For diagnostics purposes, use the BRP diagnostic software (BUDS2).

After a problem has been solved, be sure to clear the fault(s) recorded in the ECM using the BRP diagnostic software.

**⚠ WARNING**

**Electrical actuators and electronic modules may be powered up as soon as the START/STOP button is depressed. Always disconnect the battery prior to disconnecting any electrical or electronic parts.**

Never use a battery charger to temporarily substitute the battery as it may cause the ECM to function erratically, or not at all.

Check related-circuit fuse solidity and condition with an ohmmeter. A visual inspection could lead to a false diagnosis.

### *Poor Idling*

If poor idling is experienced, check the following:

– Poor quality fuel or water in the fuel
– Fault codes using BUDS2
– Throttle body cleanliness
– Engine leaks or other mechanical problem.

### *Electrical Related Problems*

It is important to check the following in the electrical system:

– Battery voltage
– Fuses
– Ground connections
– Wiring and connectors.

Ensure that all electronic components are original BRP recommended components. Any

modification to the wiring harness may lead to poor system operation or generate fault codes.

### *Electrical Connections*

Pay particular attention to ensure that terminals and pins are not out of their connectors, corroded, or out of shape.

When probing terminals, pay attention not to deform the terminals as this could cause a loose or intermittent connection that would be difficult to troubleshoot.

**NOTE:** Do not apply dielectric grease or other lubricants on the ECM connectors.

## Procedures

### *Fuel Injector*

#### *Fuel Injector Connector Location*

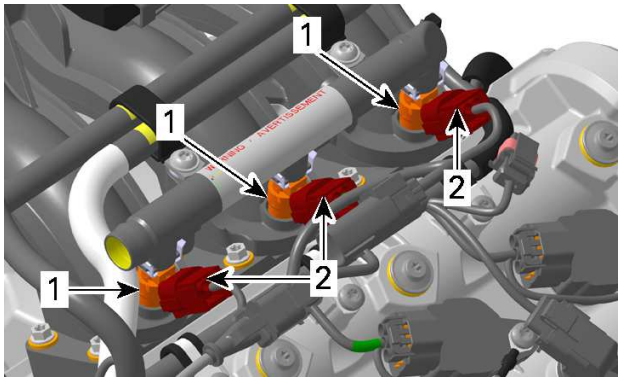


1. *Fuel Injectors*
2. *Fuel Injector connectors*

#### *Testing the Fuel Injector Operation Using BUDS2 (Dynamic)*

**NOTE:** As a first troubleshooting step, always check for applicable fault codes using the BRP diagnostic software (BUDS2).

1. Connect the vehicle to the BRP diagnostic software (BUDS2).
2. Start engine.
3. In BUDS2, select the following:
   - **Functions** page
   - **ECM** button
   - **Activators** tab.
4. Select an injector.
5. Repeat for all injectors.
6. If the engine RPM drops momentarily when clicking on a cylinder, the injector on this cylinder is functioning normally.
7. If the engine RPM does not drop momentarily when clicking on a cylinder, this cylinder is not functioning properly. Check the following:
   - Fuel injector operation. Refer to *Testing the Fuel Injector Balance Using BUDS2*
   - Spark plug and ignition coil. Refer to *Ignition Coils And Spark Plugs - GEN2* subsection.
   - Engine condition.

#### *Testing the Fuel Injector Balance Using BUDS2*

**NOTICE**

**After fuel injector activation using BUDS2, always crank engine in drowned mode to ventilate the engine of fuel.**

1. Install a fuel pressure gauge as described in *Testing the Fuel Pump Pressure* of *Fuel Tank and Fuel Pump* subsection.
2. Connect the vehicle to the BRP diagnostic software (BUDS2).
3. Press the Start button to activate the ECM.
4. In BUDS2, select the following:
   - **Functions** page
   - **ECM** button
   - **Functions** tab
   - **IO Controls - Activate Fuel Pump**.
5. Click on the **ACTIVATE** button to activate fuel pump.
6. Fuel pressure must be within specification. Refer to *Fuel Tank and Fuel Pump* subsection. Re-activate fuel pump as necessary.
7. In BUDS2, energize fuel injector 1.
8. Record the fuel pressure drop for injector 1.
9. Re-activate fuel pump.
10. Repeat the procedure for fuel injector 2 and 3 and record the pressure drop for each injector.
11. The maximum fuel pressure drop between injectors should not exceed the following specification:

| Maximum Fuel Pressure Drop Allowed Between Fuel Injectors |
|---|
| 10 kPa<br>(1.5 lbf/in²) |

12. If the pressure drop between fuel injectors is greater than the specification, replace the injector with the least pressure drop, then repeat the test.

13. Using the valve on the fuel pressure gauge, release the pressure in the system (if so equipped).
14. Remove fuel pressure gauge and reinstall removed parts.
15. Crank engine in drowned mode (accelerator held all the way in) to ventilate the engine of the fuel that was injected during the test.

**⚠ WARNING**

**Always crank engine in drowned mode to ventilate all fuel that was injected during the test. Failure to do so may result in severe engine damage and injury.**

### *Testing for Fuel Injector Leaks*

#### *Test Setup*

1. Ensure there is enough fuel in fuel tank.
2. Ensure fuel pressure from fuel pump is within specification. Refer to *Fuel Tank and Fuel Pump* subsection.

**NOTE:** Keep the pressure gauge installed for the leakage test.

3. Connect the vehicle to the BRP diagnostic software (BUDS2).
4. In BUDS2, go to:
   - **Functions** page
   - **Vehicle** or **ECM** button
   - **Functions** tab
   - **Execute Fuel Pressure Relief**.
5. Remove fuel rail with injectors from engine. However, **do not** disconnect fuel pump pressure hose from fuel rail. Refer to *FUEL injectors* in this subsection.
6. Position fuel rail so that an appropriate container may be placed under the injectors to collect any fuel leakage.

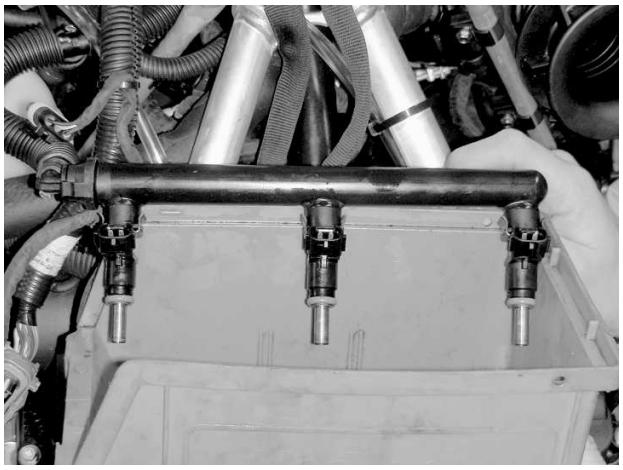

*TYPICAL - INJECTOR LEAKAGE TEST SETUP*

7. Install key on D.E.S.S. post.

#### *Testing the Leakage*

1. In BUDS2, go to:
   - **Functions** page
   - **Vehicle** or **ECM** button
   - **Functions** tab
   - **IO - Activate Fuel Pump**.
2. Check for fuel leakage from the injector nozzles.
3. Monitor fuel pressure at fuel pressure gauge. If pressure drops below 372 kPa (54 lbf/in²) during the test, reactivate fuel pump as necessary.

| Fuel Injector Leak Test | |
|---|---|
| **Test Duration** | **Specification** |
| 2 minutes | 1 drop per minute maximum |

4. If test is not within specification, replace the faulty fuel injector.
5. Properly reinstall fuel rail. Refer to *Fuel Rail* in this subsection.
6. Reinstall remaining removed components.

**⚠ WARNING**

**Wipe up any spilled fuel.**

#### *Testing the Fuel Injector Resistance*

1. Ensure vehicle electrical power is off.
2. Disconnect ECM-13 connector from the ECM.
3. Install the ECM-13 connector on the ECM adapter tool. Refer to *Electronic Control Module (ECM) - GEN2* subsection.

| | |
|---|---|
| **ECM adapter tool GEN2 (P/N 529036513)** |  |

4. Check resistance value between terminals as follows.

| | |
|---|---|
| **Fluke 115 multimeter (P/N 529035868)** |  |

| Fuel Injector Resistance Test at HIC Connector | | | |
|---|---|---|---|
| **Inj.** | **ECM Adapter Pin** | **HIC Pin** | **Specification @ 20°C (68°F)** |
| 1 | 7 | 2 | 11.4 - 12.6 Ω |
| 2 | 4 | | |
| 3 | 18 | | |

5. If reading is out of specification, remove the injector connector and check resistance value between injector pins as follows.
6. If reading is within specification, check the wire continuity between the fuse box and the HIC. Repair the wire and/ or the connector as required.

| Fuel Injector Resistance Test | | |
|---|---|---|
| **Injector Pin** | | **Specification @ 20 °C (68 °F)** |
| 1 | 2 | 11.4 - 12.6 Ω |

7. If reading is out of specification, replace injector.

### *Testing the Fuel Injector Input Voltage*

1. Ensure both ECM connectors are properly connected.
2. Ensure the HIC connector is properly connected.
3. Disconnect the fuel injector connector.
4. Ensure fuel injector fuse is properly installed. Refer to the appropriate wiring diagram.
5. Install key on D.E.S.S post.
6. Momentarily press the START/STOP button to wake up the ECM without holding the brakes.

**NOTE:** It is not necessary to activate the injector since it is continuously powered when the ECM is awake.

7. Set the multimeter to Vdc. Read voltage.

| | |
|---|---|
| **Fluke 115 multimeter (P/N 529035868)** |  |

| Fuel Injector Input Voltage Test | | | |
|---|---|---|---|
| **Inj.** | **Inj. Pin** | **Battery Post** | **Specification** |
| 1 | 2 | Negative (-) | Battery voltage |
| 2 | | | |
| 3 | | | |

8. If injector input voltage is good, carry out the following:
   - Circuit continuity test between injector and ECM, refer to *Wiring Diagram* subsection.
   - Test the injector signal, go to: *Testing the Fuel Injector Signal* in this subsection.
9. If injector input voltage is not good, check the following:
   - Fuel injector fuse
   - Circuit continuity between fuel injector fuse and injector. Refer to *Power Distribution* and *Wiring Diagram* subsections.

### *Testing the Fuel Injector Signal*

1. Set multimeter to Vdc.

| | |
|---|---|
| **Fluke 115 multimeter (P/N 529035868)** |  |

**NOTE:** Make sure multimeter is in the **Auto Range** mode.

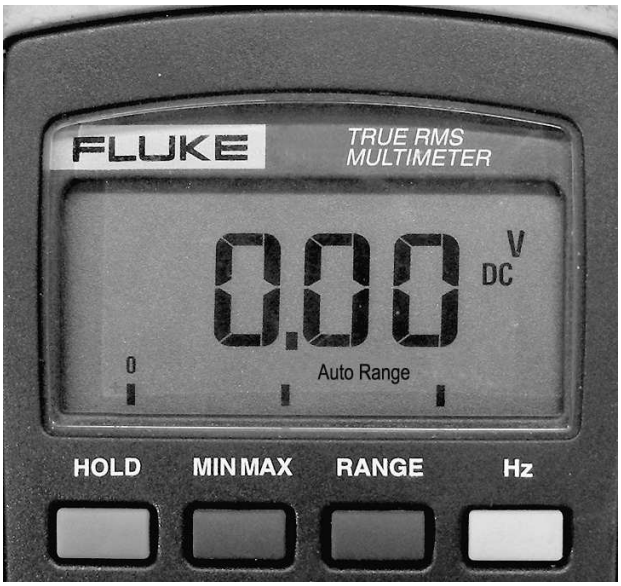


2. Press the **Hz** button so that the display shows Hz.

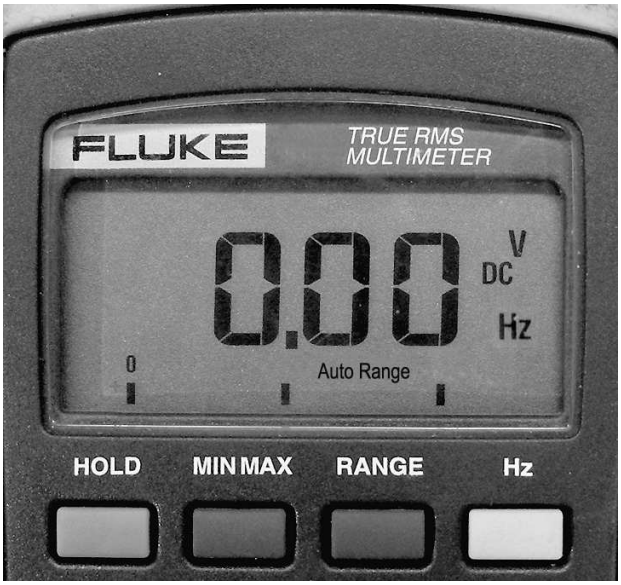


3. Connect the multimeter probes as indicated in the following table and using the BUDS2 software, activate each injector and read the frequency on the multimeter.

**NOTE:** The multimeter counts the pulses per seconds (Hertz) of current the ECM sends to the injector.

| Fuel Injector Signal Test | | | |
|---|---|---|---|
| **Inj.** | **Inj. Wire** | **Battery Post** | **Specification** |
| 1 | BN/ RD | Negative (-) | 9 Hz |
| 2 | BN/ BU | | |
| 3 | BN/ GY | | |

4. If reading is good, the control circuit is functional.
5. If there is no reading, check continuity of control circuit (ECM to injectors). Refer to *Wiring Diagram* for circuit details.

***Removing the Fuel Injector***

1. Connect the vehicle to the BRP diagnostic software (BUDS2).
2. In BUDS2, go to:
   - **Functions** page
   - **Vehicle** or **ECM** button
   - **Functions** tab
   - **Execute Fuel Pressure Relief**.
3. Disconnect the battery, refer to *Charging System* subsection.

**⚠ WARNING**

**When removing or disconnecting the fuel injectors, always disconnect the battery.**

4. Remove parts required for access to the fuel rail and fuel injectors.
5. Disconnect the fuel injector electrical connectors.
6. Disconnect the fuel pressure hose from the fuel rail.

| | |
|---|---|
| **Fuel hose disconnect tool (P/N 529036037)** |  |



**NOTE:** Wrap a rag around the hose end to catch any fuel leakage.

7. Remove the fuel rail mounting screws.

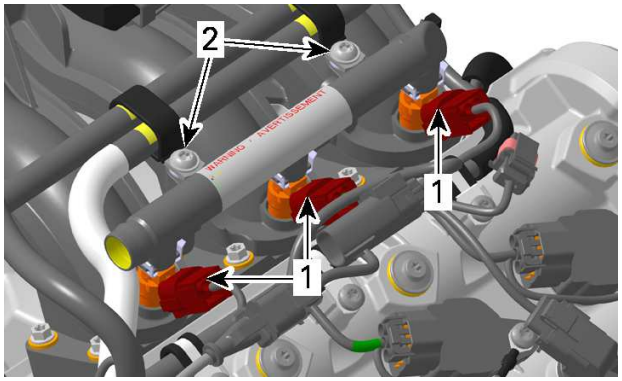


*1. Injector connectors*
*2. Fuel rail mounting screws*

8. Pull on fuel rail to remove the fuel rail and injectors from the engine.
9. Remove the fuel injector retaining clips.

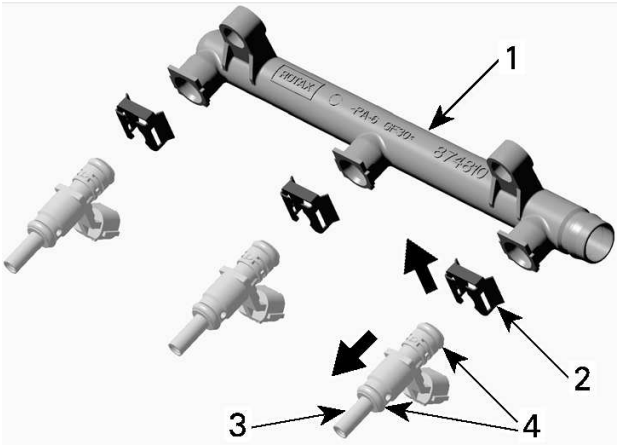


*1. Fuel rail*
*2. Fuel injector retaining clip*
*3. Injector*
*4. Injector O-rings*

10. Pull the fuel injector(s) out of the fuel rail.
11. Remove and discard injector O-rings.

### *Installing the Fuel Injector*

The installation is the reverse of the removal procedure. However, pay attention to the following.

1. Install **NEW** O-rings on fuel injector(s).
2. Apply a thin film of engine oil to O-rings to ease insertion in rail.

| **Engine oil** |
|---|

3. Install fuel injector with your hand. Do not use any tool.
4. Firmly push injector until it bottoms out.
5. Install fuel rail.

| **Tightening Torque** | |
|---|---|
| Fuel rail retaining screw | 9 ± 1 Nm (80 ± 9 lbf-in) |

6. Apply engine oil on O-rings of fuel pressure hose fitting.

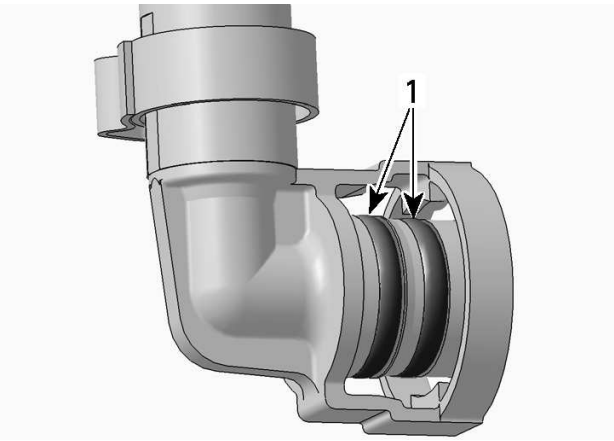


*FUEL PRESSURE HOSE FITTING*
1. *Apply oil on O-rings*

7. Connect fuel pressure hose to fuel rail.

**IMPORTANT**: Push fuel hose fitting on fuel rail until you hear a "click". Try pulling on fuel hose fitting to ensure it is properly locked.

Pressurize the fuel system and check for fuel leaks. Refer to *Fuel System Pressurization* in *Fuel Tank and Fuel Pump* subsection.

**⚠ WARNING**

**Failure to pressurize the fuel system and checking for fuel leaks may result in severe injury or a life threatening situation should a leak occur.**

8. Reinstall all remaining removed parts.

### *Throttle Body (Electronic Throttle Control (ETC))*

### *Throttle Body (ETC) Description*

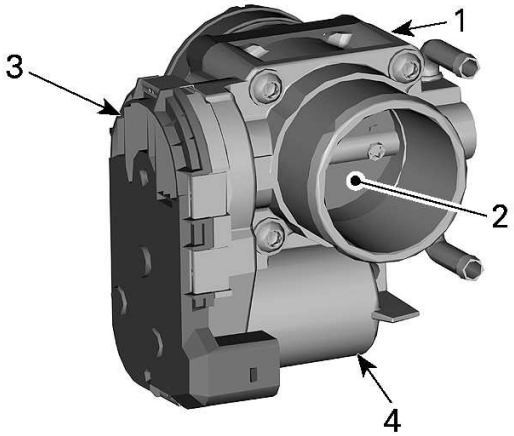


1. *Throttle body*
2. *Throttle plate*
3. *TPS (Throttle Position Sensor) (inside)*
4. *ETA (Electric Throttle Actuator) (electric motor inside)*

### *Electric Throttle Actuator (ETA)*

The electric throttle actuator (ETA) is a DC motor on the throttle body that regulates the throttle plate via a drive gear. It receives its control signal from the ECM. Pulse width modulation (PWM) is used to control the motor.

### *Throttle Plate Operating Positions*

1. Two torsional springs are connected to the throttle plate. A main spring and another one in a plunger mechanism.
2. When there is no power to the throttle actuator (ETA), the plunger mechanism maintains the throttle plate at a rest position. This also serves as the limp home position.
3. When the throttle plate is opened by the ETA as commanded by the ECM, it acts against the main spring. If the ETA failed, the return spring would bring the throttle plate back to the limp home position.

| ECM | Engine | Throttle Body |
|---|---|---|
| OFF | Stopped | Throttle actuator: Off. Throttle plate: Rest position, maintained opened at approximately 8° (1). This is also the limp home position. |
| ON | Not started | Throttle actuator: On. Throttle plate: Moves from the rest position to approximately 15°. It then moves back to the rest position. This is the diagnostic mode where the rest position, actuator opening force to overcome the return springs and the motor return rate are monitored. If any of these parameters are out of range, a fault code is initiated. |
| ON | Not started. Very cold environment | Throttle actuator: On. Throttle plate: Execute check for ice on throttle plate. If throttle plate does not reach the fully closed position, throttle plate is moving until closed position can be reached. |

Midwest Manuals
Green Manuals
Paperless Manuals For a Better Tomorrow
www.green-manuals.com
If you bought this manual from any other seller please leave them NEGATIVE feedback and notify us at bestshopmanuals@gmail.com

| ECM | Engine | Throttle Body |
|---|---|---|
| ON | Started. Normal operation at idle | Throttle actuator: On. Throttle plate: Moves from the rest position to idle position (approximately 1-3°) according to ECM injection and ignition maps. Throttle plate is opened and closed as necessary to control the idle speed. |
| ON | Started. Normal operation at various RPM | Throttle actuator: On. Throttle plate: Opens and closes according to ECM torque management priorities. |
| (1) Degree values are given from the fully closed position. | | |

### *Throttle Body (ETC) Faults and Effects*

**NOTE:** Among other things, a weak or broken spring and a sticky throttle plate are validated by the throttle body diagnostic mode.

| Fault | Effect |
|---|---|
| Partial failure of TAS sensor (one internal sensor only) | Limp home mode. Engine speed limited to idle.<br>ECM will use the remaining TAS sensor.<br>Fault code set and beeper activated to emit warning signals.<br>Check engine light is turned ON.<br>Driveability could be reset by releasing and reapplying the throttle. |
| Complete failure of TAS sensor (both internal sensors) | Limp home mode. Engine speed limited to 2500 RPM.<br>Fault code set and beeper activated to emit warning signals.<br>Check engine light is turned ON. |
| Any throttle body failure | Limp home mode. Engine speed limited to 2500 RPM.<br>Engine speed can still be increased up to 3200 RPM using the throttle lever.<br>Fault code set and beeper activated to emit warning signals.<br>Check engine light is turned ON. |

**NOTE:** Refer to *Diagnostic and Fault Codes* and *Intelligent Throttle Control* (iTC) subsections for more informations.

### *Lubricating the Throttle Body (ETC)*

No lubrication is required.

### *Testing the Electric Throttle Actuator (ETA)*

#### *Electric Throttle Actuator (ETA) Test with BUDS2*

1. Connect the vehicle to the BRP diagnostic software (BUDS2).
2. Install key on D.E.S.S. post.
3. Press the START/STOP button without holding the brakes to wake up the ECM.
4. In BUDS2, go to:
   - **Measurements** page
   - **ECM** button
   - **Presets** and **ECM - BASIC** tabs
   - **Throttle Opening**.

5. Slowly depress the throttle to WOT. The ETA should go from approximately 10% to 100%.
6. If result is out of specification, carry out a *Throttle Position Sensor Initialization*. Refer to *Throttle Position Sensor (TPS)* in this subsection.

**NOTE:** The ETA is reset at the same time as the TPS.

7. After the reset, test ETA again.
8. If the result is still out of specification, check wire continuity between ECM and throttle body before assuming the ETA is at fault.

### *Inspecting the Throttle Body (ETC)*

1. Remove parts required to access throttle body.
2. Carry out the following:
   - Inspect throttle body for cleanliness.
   - Ensure throttle plate opens fully and smoothly.
   - Check for corroded or damaged wiring or damaged ETC connectors.

### *Testing the Throttle Body (ETC) (Dynamic)*

1. Remove the parts required to access the throttle body (ETC).
2. Remove the air inlet hose from the throttle body.
3. Observe the throttle plate with the engine stopped.

   The throttle plate should be in the rest position (slightly opened).

**⚠ CAUTION**

**Keep your fingers out of the throttle plate area while the ECM turns on. The throttle actuator will cycle. This could cause serious finger injuries as throttle plate quickly moves.**

4. As you observe the throttle plate, have someone press the START/STOP button to wake up the ECM.

   The throttle plate should cycle quickly from the rest position to a partially open position (approximately 15°), then back to the rest position.
5. Install the tether cord on the D.E.S.S. post.

   The throttle plate should cycle again.
6. As you observe the throttle plate, have someone gradually and evenly pull in the throttle lever, then release it in the same way.

   The throttle plate should open then close according to throttle lever position however, the movement of the throttle plate may not be linear with the displacement of the throttle lever.
7. If any test failed, proceed with *Testing the Throttle Body (ETC) (static).*

### *Testing the Throttle Body (ETC) (Static)*

**⚠ CAUTION**

**First ensure the ECM is off. Do not move the throttle plate using your fingers. Otherwise, should the START/STOP button be pressed, the ECM would turn on and quickly cycle the throttle plate which could cause serious finger injury.**

1. Using a blunt tool, push in on the throttle plate and ensure it opens smoothly within the throttle body.

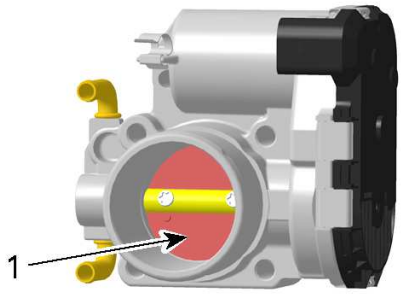


*1. Push here to open*

**NOTE:** The throttle plate must open fully and return freely to the rest position (slightly opened) when released.

2. Push throttle plate closed as indicated in following illustration. It must close completely and return freely to the rest position (slightly opened) when released.

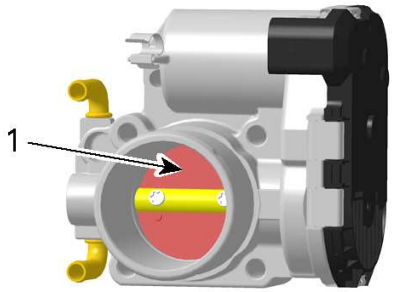


*1. Push here to close*

3. If the throttle plate does not move smoothly or does not return freely to the rest position, the problem is mechanical. Check for dirt accumulation on throttle plate shaft. It may also be an actuator or gear problem. Replace throttle body as necessary.
4. If throttle plate operates normally, the problem is electrical. Check electric throttle actuator (ETA) wiring continuity, throttle position sensor (TPS) and throttle accelerator sensor (TAS).

### *Cleaning the Throttle Body (ETC)*

1. Remove throttle body from intake manifold.
2. Check throttle body cleanliness using a flashlight. Fully open throttle plate and verify:
   - Throttle body bore
   - Throttle plate edge.

   Look for:
   - Dirt
   - Oily surfaces
   - Carbon and dirt deposits on throttle plate and the surrounding bore.
3. Clean as necessary.

**NOTICE**

**Only use an appropriate throttle body cleaner that will not damage O-rings and EFI sensors.**

4. To avoid getting dirt into engine, spray cleaner on a clean rag then rub rag against throttle plate and bore. A toothbrush may also be used.
5. Gently open throttle plate and hold fully open to clean all surfaces.
6. To remove residual dirt, spray cleaner on throttle plate and throttle bore.
7. Reinstall all removed parts.

### *Removing the Throttle Body (ETC)*

**⚠ CAUTION**

**Ensure the key is removed from D.E.S.S. post and battery cables are disconnected so that nobody can activate the electrical system, otherwise the ECM would turn on and the throttle actuator (ETA) would cycle. This could cause serious finger injury as the throttle plate moves quickly.**

1. Remove parts required to access throttle body.
2. Block coolant hoses connected to throttle body and remove them. Refer to *Intake Manifold - GEN2* subsection.
3. Disconnect BPS and ETC connector.
4. Loosen gear clamp.
5. Remove throttle body with connecting socket from intake manifold.

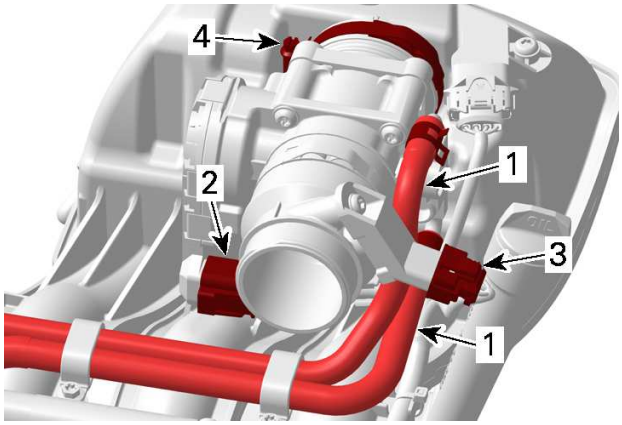


1. *Coolant hoses*
2. *ETC connector*
3. *BPS connector*
4. *Gear clamp*

### *Installing the Throttle Body (ETC)*

The installation is the reverse of the removal procedure. However, pay attention to the following.

1. Make sure to index connecting socket notch with the intake manifold tab.

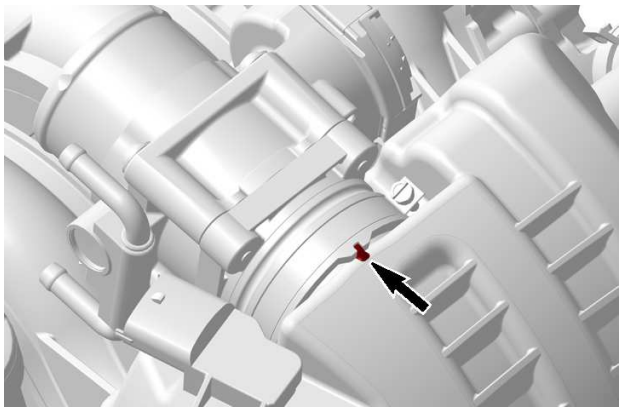

***INTAKE MANIFOLD TAB***

2. Install connecting socket clamp in proper position and tighten to specification.

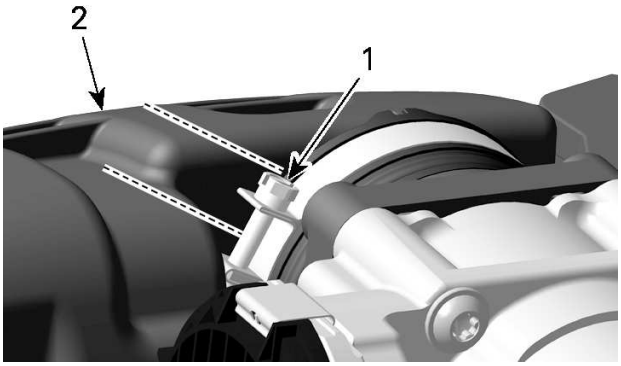


***ALLOWED POSITION OF CLAMP SCREW***
1. *Screw of clamp*
2. *Intake manifold*

| Tightening Torque | |
|---|---|
| Connecting socket clamp | 4 ± 0.5 Nm (35 ± 4 lbf-in) |

3. Refill and bleed cooling system. Refer to *Cooling System - Vehicle Components* subsection.
4. Perform the *Throttle Position Sensor Initialization* reset procedure. Refer to *Throttle Position Sensor (TPS)* in this subsection.
5. Install all remaining removed parts, refer to applicable subsections.
6. Start engine and ensure proper idle and throttle control.

### *Throttle Position Sensor (TPS)*

#### *TPS Description*

1. The TPS is part of the throttle body (ETC).
2. The throttle position sensor (TPS) is a double potentiometer that sends signals to the ECM that are proportional to the throttle plate angle.
3. As a first troubleshooting step, always check for applicable fault codes using the BRP diagnostic software (BUDS2).

#### *Throttle Position Sensor Initialization*

**NOTE:** The TPS initialization procedure **must** be carried out whenever the throttle body (ETC) is replaced.

This operation performs a reset of the TPS basic values in the ECM. This reset is very important as the TPS values are part of the basic parameters for all fuel mapping calculations and control of several settings such as for idle speed, LIMP HOME mode and maximum RPM of the engine.

**NOTICE**

**An improperly set TPS may lead to improper idle speed (too low or too high), poor engine performance, poor engine starting and engine stop on deceleration, fault codes and possible engine damage. Emission compliance may also be affected.**

1. Install key on D.E.S.S. post.
2. Press the START/STOP button to wake up the ECM.
3. Ensure accelerator pedal is completely released.
4. Connect the vehicle to the BRP diagnostic software (BUDS2).
5. In BUDS2, select
   - **Settings** button
   - **ECM** page tab
   - **Settings** page
   - **Initialization - Reset TPS**.
6. In the **Reset TPS** box, click on the **Reset** button.

   A message will be displayed if the operation is successful.

   If an error occurred or the TPS is not within the allowed range while resetting, the ECM will generate a fault code and will not accept the setting.
7. Start engine and make sure it operates normally through its full engine RPM range.
8. Check for fault codes using BUDS2, If a fault code related to the throttle actuator appears, clear it, then carry out another Closed Throttle Reset procedure. To clear faults, refer to *Diagnostic and Fault Codes* subsection.

#### *Testing the TPS Resistance*

1. Ensure the throttle body connector is properly connected.
2. Disconnect ECM-13 connector from the ECM and install it on the ECM adapter tool.

| | |
|---|---|
| **ECM adapter tool GEN2 (P/N 529036513)** |  |

3. Set multimeter to Ω.

| | |
|---|---|
| **Fluke 115 multimeter (P/N 529035868)** |  |

4. Probe circuit as per following table while using your hand to manually move throttle plate.

| TPS Resistance Test | | | | | |
|---|---|---|---|---|---|
| **ECM Adapter Tool** | | **Fully Closed Throttle Plate (1)** | | **Fully Open Throttle Plate** | |
| | | **Resistance (Ω)** | | | |
| **Pin** | | **Min.** | **Max.** | **Min.** | **Max.** |
| 26 | 3 | 875 | 1625 | 875 | 1625 |
| 26 | 21 | 954 | 1934 | 228 | 585 |
| 26 | 40 | 254 | 634 | 980 | 1983 |
| 21 | 3 | 228 | 585 | 954 | 1934 |
| 21 | 40 | 1385 | 2315 | 1385 | 2315 |
| 3 | 40 | 980 | 1983 | 254 | 634 |
| (1) To obtain the fully closed position, it is necessary to push against the throttle plate in the throttle body with your hand and hold it in this position for the measurement. | | | | | |

5. If any resistance value is incorrect, check wire continuity between ECM and throttle body before assuming the TPS is at fault. Refer to *Wiring Diagram* subsection.

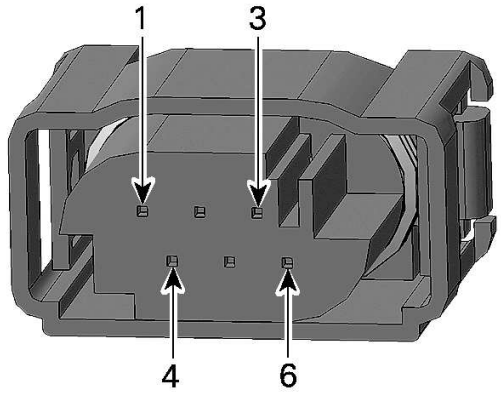


*THROTTLE BODY CONNECTOR PIN-OUT*

# Notes

## Technician's Notes

## Related Documents

| Bulletins | |
|---|---|
| | |
| | |
| | |
| | |
| | |
| | |
| | |
| | |
| | |
| | |
| | |
| | |
| | |
| **Instruction Sheets** | |
| | |
| | |
| | |
| | |
| | |
| | |
| | |
| | |
| | |
| | |
| | |
| | |
| **Other** | |
| | |
| | |
| | |
| | |
| | |
| | |
| | |
| | |
| | |
| | |
| | |
| | |

04

# ELECTRICAL SYSTEM

# 04 ELECTRICAL SYSTEM

# Ignition Coils and Spark Plugs

## SERVICE TOOLS


| Description | Part Number | Page |
|---|---|---|
| ECM ADAPTER TOOL GEN2 | (P/N 529036513) | 353 |
| ECM ADAPTER TOOL | (P/N 529036166) | 348 |
| FLUKE 115 MULTIMETER | (P/N 529035868) | 347–348, 352–353 |


## General

This section refers to the following ECM:

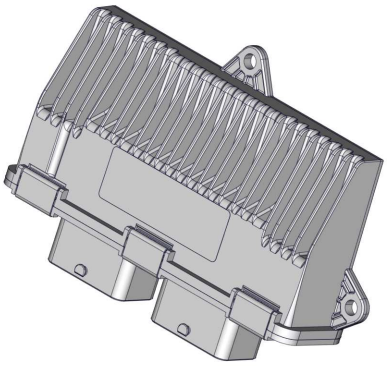

**⚠ WARNING**

**Torque wrench tightening specifications must be strictly adhered to.**
**Locking devices when removed (e.g.: locking tabs, elastic stop nuts, self-locking fasteners, cotter pins, etc.) must be replaced.**

Hoses, cables or locking ties removed during a procedure must be reinstalled as per factory standards.

**⚠ WARNING**

**Never check for engine ignition spark from an open coil and/or spark plug as spark may cause potential fuel vapors to ignite. Always use an approved spark tester.**

## Maintenance

Verify the spark plug gap. For spark plug removal and installation, refer to *Spark Plug* further in this subsection.

**NOTICE**

**Do not adjust gap on this type of spark plug. The adjustment could weaken negative electrodes which may lead to electrode breakage and severe engine damage.**

| Engine | Spark Plug Type | Gap mm (in) |
|---|---|---|
| 600 ACE | NGK MR7BI-8 | 0.7 to 0.8 mm (.028 to .031 in) **NOT** adjustable |
| 900 ACE | NGK MR8BI-8 | |

## Procedures

### *Ignition Coils*

#### *Ignition Coil Access*

1. Disconnect the stator connector. Refer to *Stator Connector Access* in the *Magneto and Starter - GEN1* subsection.
2. Remove the upper body module. Refer to *Body* subsection.

#### *Testing the Ignition Coil using BUDS2*

1. Connect the vehicle to the BRP diagnostic software (BUDS2). Refer to *Communication Tools* subsection.
2. In BUDS2, select:
   - **Functions** page
   - **ECM** button
   - **Activators** tab.
3. Energize the ignition coil to be tested.
4. You should hear the spark occurring. If in doubt, use a sealed **vapor proof** spark tester

or an inductive spark tester as available from tool suppliers, to prevent a spark from occurring.
5. If there is no ignition at one or more coils, carry out *Testing the Ignition Coil Input Voltage*.
6. If spark is weak, try a new spark plug. If spark is still weak, try a new ignition coil.

**NOTE:** The voltage required to produce a spark in the combustion chamber is higher when the engine is running.

### *Testing the Ignition Coil Input Voltage*

Make sure the fuel pump fuse and the relay are good before testing.

1. Disconnect the applicable ignition coil connector.
2. Install key on D.E.S.S. post.
3. Set emergency engine stop switch to RUN.
4. Briefly press on START/RER switch to wake up ECM.
5. Set the multimeter to Vdc.

| | |
|---|---|
| **Fluke 115 multimeter (P/N 529035868)** |  |

6. Measure voltage.

**NOTICE**

**Test is valid only if ECM is active (gauge will be on).**

| Ignition Coil Input Voltage Test | | |
|---|---|---|
| **Ign. Coil Connector Pin** | **Battery Post** | **Specification** |
| 1 | Negative (-) | Battery voltage |

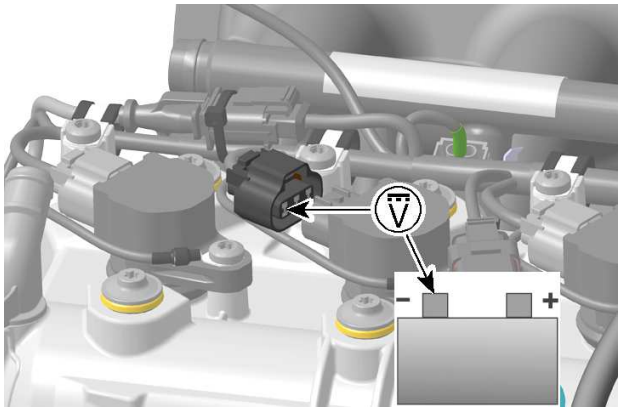


*900 ACE ENGINE SHOWN - IGNITION COIL INPUT VOLTAGE TEST*

7. If reading is within specification, carry out a *Testing the Ignition Coil Resistance*.
8. If reading is out of specification, carry out a *Testing the Ignition Coil Power Circuit Continuity*.

### *Testing the Ignition Coil Power Circuit Continuity*

1. Remove key from D.E.S.S. post.
2. Ensure emergency engine stop switch is set to STOP.
3. Locate and remove the fuel pump fuse.
4. Set the multimeter to Ω.

| | |
|---|---|
| **Fluke 115 multimeter (P/N 529035868)** |  |

5. Read resistance of the desired ignition coil circuit.

| Ignition Coil Power Circuit Continuity Test (without Electro-Mechanical Reverse) | | | |
|---|---|---|---|
| **Ign. Coil** | **Coil Connector Pin** | **Fuse Box Terminal** | **Specification** |
| 1 | 1 | B4 | Close to 0 Ω |
| 2 | 1 | | |
| 3 | 1 | | |

| Ignition Coil Power Circuit Continuity Test (with Electro-Mechanical Reverse) | | | |
|---|---|---|---|
| **Ign. Coil** | **Coil Connector Pin** | **Fuse Box Terminal** | **Specification** |
| 1 | 1 | A3 | Close to 0 Ω |
| 2 | 1 | | |
| 3 | 1 | | |

6. If test fails at any ignition coil, test the following items separately and repair/ replace wiring or terminals from fuse box to the applicable ignition coil. Refer to *Wiring Diagram* for details.
   - Wiring from fuse box to HIC
   - Wiring from HIC to ignition coil.

### *Testing the Ignition Coil Resistance*

An ignition coil with a good resistance measurement can still be faulty. Current leakage can occur

at high voltage levels which is not detectable with an ohmmeter. It may be necessary to replace the ignition coil to verify that the coil is faulty or not.

1. Remove ignition coil. Refer to *Removing the Ignition Coil* in this subsection.
2. Perform a visual inspection of the ignition coils. Check for corrosion, bent pins, loose or burnt contacts, and cracked or torn insulator.
3. Using a multimeter, test the resistance of the primary winding.

| **Fluke 115 multimeter (P/N 529035868)** |  |
|---|---|




***PRIMARY WINDING***

| **Ignition Coil Power Circuit Continuity Test** | | |
|---|---|---|
| **Ignition Coil Pin** | | **Specification @ 20 °C (68 °F)** |
| 1 | 3 | 0.79 - 0.97 Ω |

**NOTICE**

**The secondary winding on this type of ignition coil cannot be tested.**

4. If reading is out of specification, replace ignition coil.
5. If reading is within specification, carry out *Testing the Ignition Coil Control Circuit Continuity*.

### *Testing the Ignition Coil Control Circuit Continuity*

1. Connect the ECM connector A to the ECM adapter tool.

| **ECM adapter tool (P/N 529036166)** |  |
|---|---|

2. Disconnect ignition coil connector.
3. Test for continuity of circuit as per following table.

| **Fluke 115 multimeter (P/N 529035868)** |  |
|---|---|

| **Ignition Coil Control Circuit Continuity Test 600 ACE** | | | |
|---|---|---|---|
| **Ign. Coil** | **Coil Connector Pin** | **ECM Adapter Pin** | **Specification** |
| 1 | 3 | M1 | Close to 0 Ω |
| 2 | 3 | M2 | |

| **Ignition Coil Control Circuit Continuity Test 900 ACE** | | | |
|---|---|---|---|
| **Ign. Coil** | **Coil Connector Pin** | **ECM Adapter Pin** | **Specification** |
| 1 | 3 | M4 | Close to 0 Ω |
| 2 | 3 | M2 | |
| 3 | 3 | M1 | |

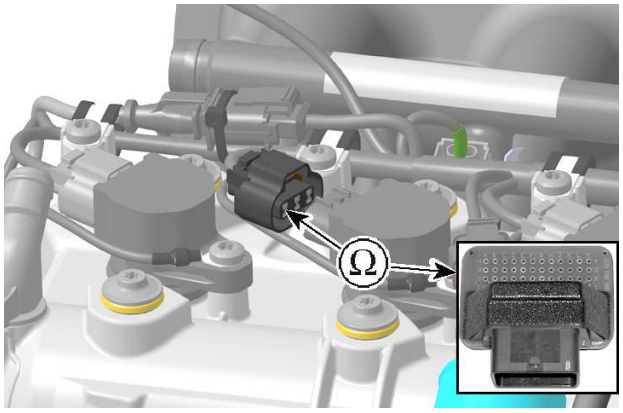


***900 ACE ENGINE SHOWN - IGNITION COIL CONTROL CIRCUIT TEST***

4. If reading is out of specification, repair the connector or replace the engine wiring harness.

### *Removing the Ignition Coil*

1. Unplug CAPS (camshaft position sensor).

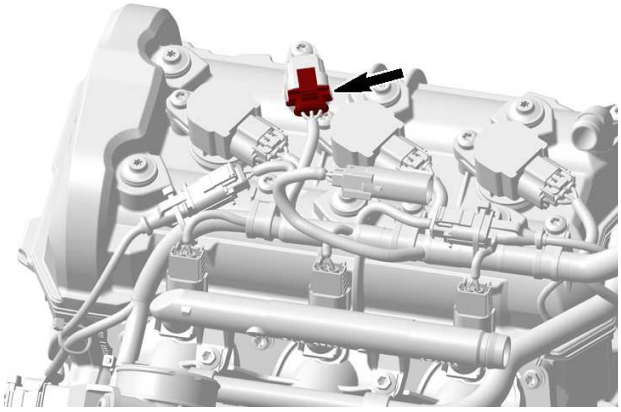

*900 ACE ENGINE SHOWN*

2. Remove:
   - Ignition coil retaining screws.
   - Ground connector.
3. Disconnect ignition coil connectors.

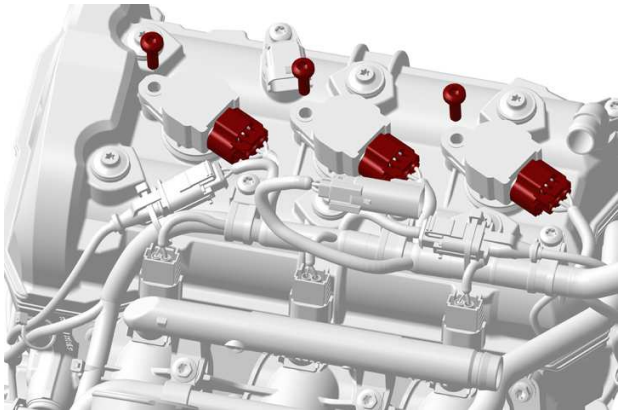

*900 ACE ENGINE SHOWN*

**NOTICE**

**Do not pry on ignition coil with a tool.**

4. Remove ignition coils with gaskets from spark plug by rotating coil side to side as you pull up.

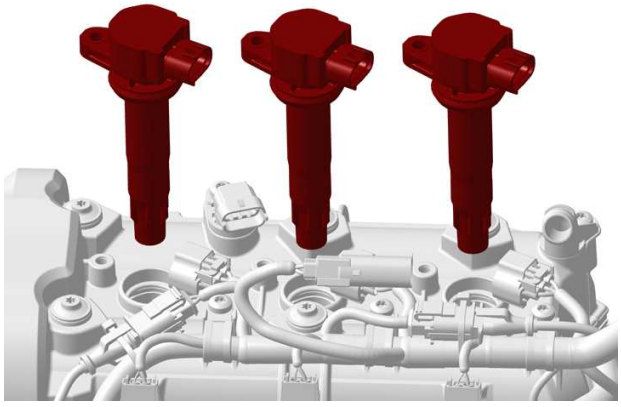

*900 ACE ENGINE SHOWN*

### *Installing the Ignition Coil*

1. Install the ignition coil on the spark plug.
2. Align the retaining screw hole of the ignition coil with the threaded hole on the valve cover.
3. Push the ignition coil all the way down until it rests on the valve cover.
4. Place the GND connector on the ignition coil and install the retaining screw.

| Tightening Torque | |
|---|---|
| Ignition coil retaining screw | 9 ± 1 Nm (80 ± 9 lbf-in) |

5. Connect ignition coil connectors.

### *Spark Plugs*

### *Removing the Spark Plugs*

1. Remove ignition coils.
2. Using a spark plug socket, release the torque applied to the spark plug.

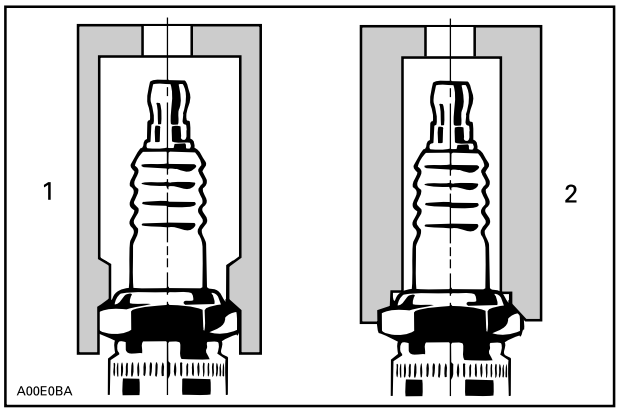


*1. Approved socket*
*2. Improper socket*

3. Clean the spark plug area with pressurized air.
4. Unscrew spark plug.
5. Use the ignition coil to take spark plug out of spark plug hole.

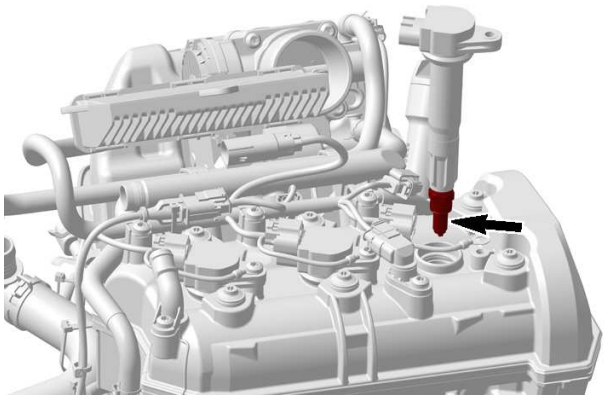

*900 ACE ENGINE SHOWN*

### *Troubleshooting a Fouled Spark Plug*

1. Fouling of the spark plug is indicated by irregular running or misfiring of the engine, decreased engine speed due to misfiring, reduced performance, and increased fuel consumption.
2. Other possible causes are: use of an incorrect or bad fuel, defective ignition system, incorrect spark plug gap, loss of compression, or lubricating oil entering the combustion chamber.
3. The plug face of a fouled spark plug has either a wet or dry black carbon deposit. Such coatings form a conductive connection between the center electrode and the ground electrode.

### *Spark Plug Analysis*

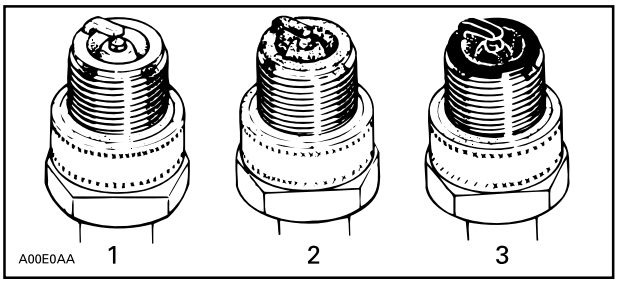


***TYPICAL***
*1. Overheated (light gray, white)*
*2. Normal (light brown, brown)*
*3. Fouled (black, wet or dry, dark deposits, gray, melted coating)*

The plug face reveals the condition of the engine, operating condition, method of driving and fuel mixture. For this reason it is advisable to inspect the spark plug at prescribed intervals, examining the plug face (i.e. the part of the plug projecting into the combustion chamber).

### *Installing the Spark Plug*

Prior to installation make sure that contact surfaces of the cylinder head and spark plug are free of grime.

1. Use a wire gauge to confirm electrode gap is as specified. Refer to *Technical Specifications* subsection.

**NOTE:** If spark plug gap is incorrect, use another spark plug.

2. Hand screw spark plug into cylinder head, then tighten with a torque wrench and an appropriate socket.

| Tightening Torque | |
|---|---|
| Spark plug | 13 ± 1 Nm<br>(115 ± 9 lbf-in) |

3. Install ignition coil.

# Ignition Coils and Spark Plugs - GEN2

## SERVICE TOOLS

| Description | Part Number | Page |
|---|---|---|
| ECM ADAPTER TOOL GEN2 | (P/N 529036513) | 353 |
| ECM ADAPTER TOOL | (P/N 529036166) | 348 |
| FLUKE 115 MULTIMETER | (P/N 529035868) | 347–348, 352–353 |



## General

This section refers to the following ECM:

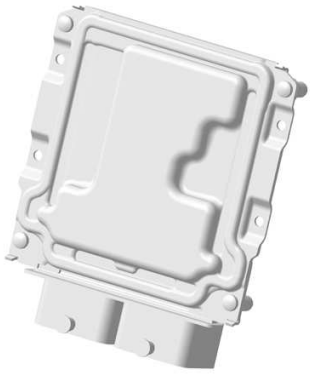

**⚠ WARNING**

**Torque wrench tightening specifications must be strictly adhered to.**
**Locking devices when removed (e.g.: locking tabs, elastic stop nuts, self-locking fasteners, cotter pins, etc.) must be replaced.**

Hoses, cables or locking ties removed during a procedure must be reinstalled as per factory standards.

**⚠ WARNING**

**Never check for engine ignition spark from an open coil and/or spark plug as spark may cause potential fuel vapors to ignite. Always use an approved spark tester.**

## Maintenance

Verify the spark plug gap. For spark plug removal and installation, refer to *Spark Plug* further in this subsection.

**NOTICE**

**Do not adjust gap on this type of spark plug. The adjustment could weaken negative electrodes which may lead to electrode breakage and severe engine damage.**

| Spark Plug | |
|---|---|
| Manufacturer and Type | NGK LMAR9AI-8D |
| Electrode gap | 0.7 to 0.8 mm (.028 to .031 in) **NOT** adjustable |

## Procedures

### *Ignition Coils*

#### *Ignition Coil Access*

1. Disconnect the stator connector. Refer to *Stator Connector Access* in the *Magneto and Starter - GEN2* subsection.
2. Remove the upper body module. Refer to *Body* subsection.

#### *Testing the Ignition Coil using BUDS2*

1. Connect the vehicle to the BRP diagnostic software (BUDS2). Refer to *Communication Tools* subsection.
2. In BUDS2, select:
   - **Functions** page
   - **ECM** button
   - **Activators** tab.
3. Energize the ignition coil to be tested.
4. You should hear the spark occurring. If in doubt, use a sealed **vapor proof** spark tester or an inductive spark tester as available from tool suppliers, to prevent a spark from occurring.

5. If there is no ignition at one or more coils, carry out *Testing the Ignition Coil Input Voltage*.
6. If spark is weak, try a new spark plug. If spark is still weak, try a new ignition coil.

**NOTE:** The voltage required to produce a spark in the combustion chamber is higher when the engine is running.

### *Testing the Ignition Coil Input Voltage*

Make sure the fuel pump fuse and the relay are good before testing.

1. Disconnect the applicable ignition coil connector.
2. Install key on D.E.S.S. post.
3. Set emergency engine stop switch to RUN.
4. Briefly press on START/RER switch to wake up ECM.
5. Set the multimeter to Vdc.

| | |
|---|---|
| **Fluke 115 multimeter (P/N 529035868)** |  |

6. Measure voltage.

**NOTICE**

**Test is valid only if ECM is active (gauge will be on).**

| Ignition Coil Input Voltage Test | | | |
|---|---|---|---|
| **Ign. Coil** | **Coil Connector Pin** | **Battery Post** | **Specification** |
| 1 | 1 | Negative (-) | Battery voltage |
| 2 | 1 | | |
| 3 | 1 | | |

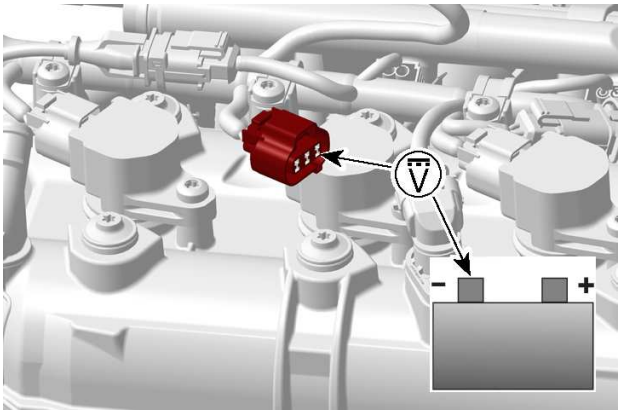


*IGNITION COIL INPUT VOLTAGE TEST*

7. If reading is within specification, carry out a *Testing the Ignition Coil Resistance*.
8. If reading is out of specification, carry out a *Testing the Ignition Coil Power Circuit Continuity*.

### *Testing the Ignition Coil Power Circuit Continuity*

1. Remove key from D.E.S.S. post.
2. Ensure emergency engine stop switch is set to STOP.
3. Locate and remove the fuel pump fuse.
4. Set the multimeter to Ω.

| | |
|---|---|
| **Fluke 115 multimeter (P/N 529035868)** |  |

5. Read resistance of the desired ignition coil circuit.

| Ignition Coil Power Circuit Continuity Test (without Electro-Mechanical Reverse) | | | |
|---|---|---|---|
| **Ign. Coil** | **Coil Connector Pin** | **Fuse Box Terminal** | **Specification** |
| 1 | 1 | B4 | Close to 0 Ω |
| 2 | 1 | | |
| 3 | 1 | | |

| Ignition Coil Power Circuit Continuity Test (with Electro-Mechanical Reverse) | | | |
|---|---|---|---|
| **Ign. Coil** | **Coil Connector Pin** | **Fuse Box Terminal** | **Specification** |
| 1 | 1 | A3 | Close to 0 Ω |
| 2 | 1 | | |
| 3 | 1 | | |

6. If reading is out of specification, test the following items separately and repair/ replace wiring or terminals from fuse box to the applicable ignition coil. Refer to *Wiring Diagram* for details.
   - Wiring from fuse box to HIC
   - Wiring from HIC to ignition coil.
7. If test succeeds, continue with a ground circuit continuity test.

| Ignition Coil Power Circuit Continuity Test | | | |
|---|---|---|---|
| Ign. Coil | Coil Connector Pin | Battery Post | Specification |
| 1 | 2 | Negative (-) | Close to 0 Ω |
| 2 | 2 | | |
| 3 | 2 | | |

8. If test fails, repair the connector or replace the engine wiring harness.

### *Testing the Ignition Coil Resistance*

An ignition coil with a good resistance measurement can still be faulty. Current leakage can occur at high voltage levels which is not detectable with an ohmmeter. Replacing the ignition coil may be necessary as a test.

1. Remove ignition coil. Refer to *Removing the Ignition Coil* in this subsection.
2. Perform a visual inspection of the ignition coils. Check for corrosion, bent pins, loose or burnt contacts, and cracked or torn insulator.
3. Using a multimeter, test the resistance of primary winding.

| Fluke 115 multimeter (P/N 529035868) |  |
|---|---|



*PRIMARY WINDING*

| Ignition Coil Power Circuit Continuity Test | | |
|---|---|---|
| Ignition Coil Pin | | Specification @ 20 °C (68 °F) |
| 1 | 3 | 0.79 - 0.97 Ω |

**NOTICE**

**The secondary winding on this type of ignition coil cannot be tested.**

4. If reading is out of specification, replace ignition coil.
5. If reading is within specification, carry out *Testing the Ignition Coil Control Circuit Continuity*.

### *Testing the Ignition Coil Control Circuit Continuity*

1. Disconnect ECM-13 connector. Refer to *Electronic Control Module - GEN2* subsection.
2. Connect ECM-13 connector to ECM adapter tool.

| ECM adapter tool GEN2 (P/N 529036513) |  |
|---|---|

3. Disconnect ignition coil connector.
4. Test for continuity of circuit as per following table.

| Fluke 115 multimeter (P/N 529035868) |  |
|---|---|

| Ignition Coil Control Circuit Continuity Test | | | |
|---|---|---|---|
| Ign. Coil | Coil Connector Pin | ECM Adapter Pin | Specification |
| 1 | 3 | 56 | Close to 0 Ω |
| 2 | 3 | 54 | |
| 3 | 3 | 55 | |

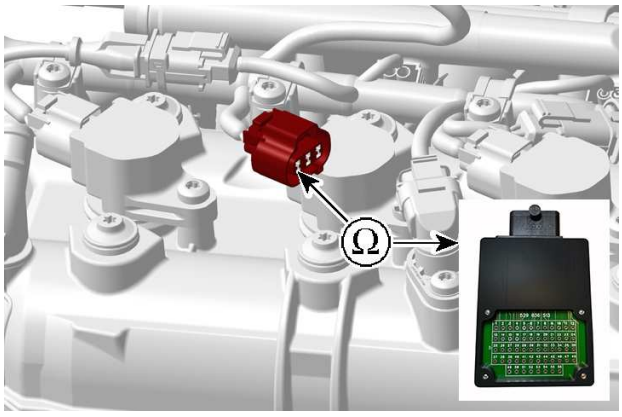

*IGNITION COIL CONTROL CIRCUIT TEST*

5. If reading is out of specification, repair the connector or replace the engine wiring harness.

### *Removing the Ignition Coil*

1. Unplug the CAPS.

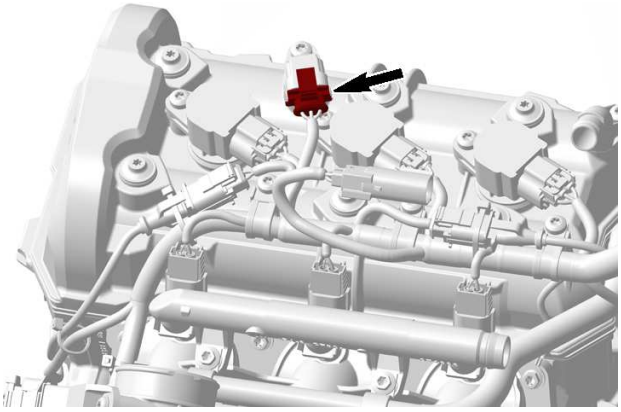

2. Remove ignition coil retaining screws.
3. Disconnect ignition coil connectors.

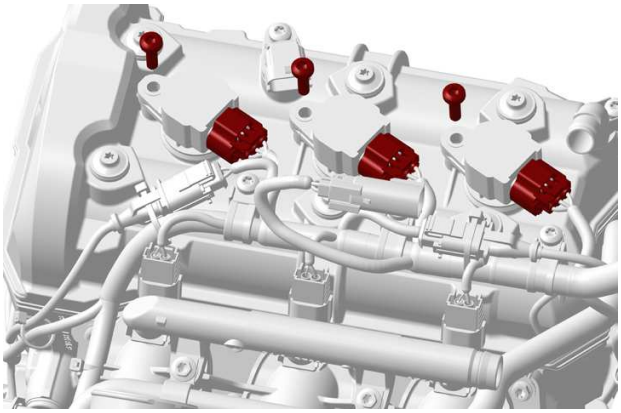

**NOTICE**

**Do not pry on ignition coil with a tool.**

4. Remove ignition coils with gaskets from spark plug by rotating coil side to side as you pull up.

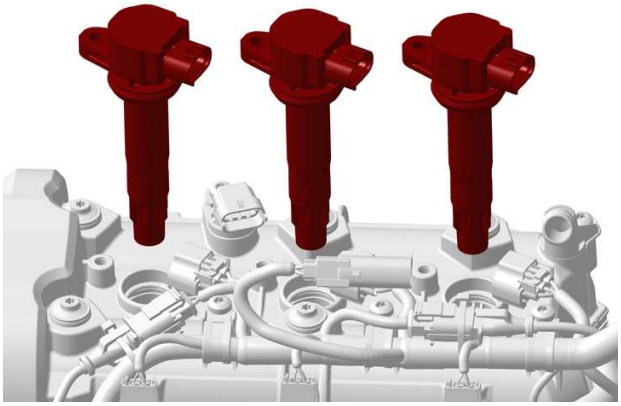

### *Inspecting the Ignition Coil*

### *Installing the Ignition Coil*

1. Install the ignition coil on the spark plug.
2. Align the retaining screw hole of the ignition coil with the threaded hole on the valve cover.
3. Push the ignition coil all the way down until it rests on the valve cover.
4. Install and tighten retaining screw.

| Tightening Torque | |
|---|---|
| Ignition coil retaining screw | 9 ± 1 Nm (80 ± 9 lbf-in) |

5. Connect ignition coil connectors.

### *Spark Plugs*

### *Removing the Spark Plugs*

1. Remove ignition coils.
2. Using a spark plug socket, release the torque applied to the spark plug.

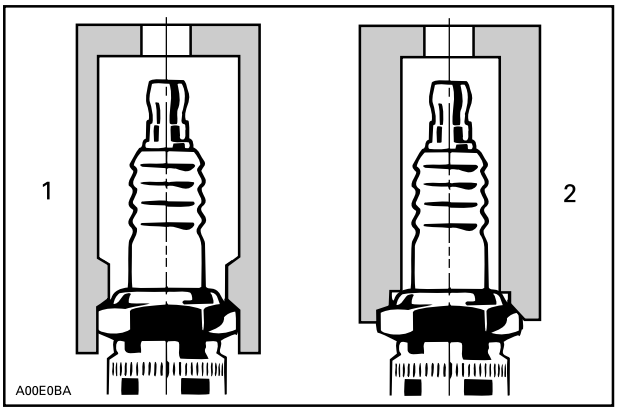


*1. Approved socket*
*2. Improper socket*

3. Clean the spark plug area with pressurized air.
4. Unscrew spark plug.
5. Use the ignition coil to take spark plug out of spark plug hole.

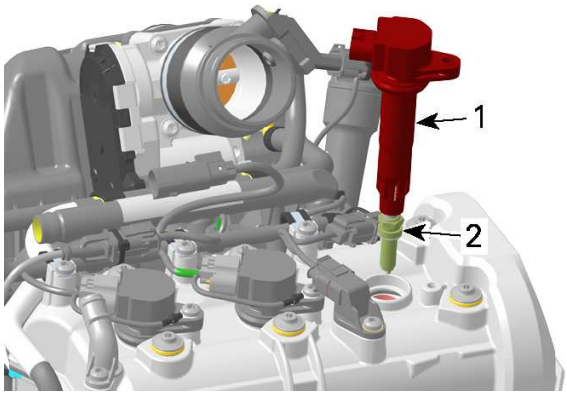


*1. Ignition coil*
*2. Spark plug*

### *Troubleshooting a Fouled Spark Plug*

1. Fouling of the spark plug is indicated by irregular running or misfiring of the engine,

decreased engine speed due to misfiring, reduced performance, and increased fuel consumption.
2. Other possible causes are: use of an incorrect or bad fuel, defective ignition system, incorrect spark plug gap, loss of compression, or lubricating oil entering the combustion chamber.
3. The plug face of a fouled spark plug has either a wet or dry black carbon deposit. Such coatings form a conductive connection between the center electrode and the ground electrode.

### *Spark Plug Analysis*

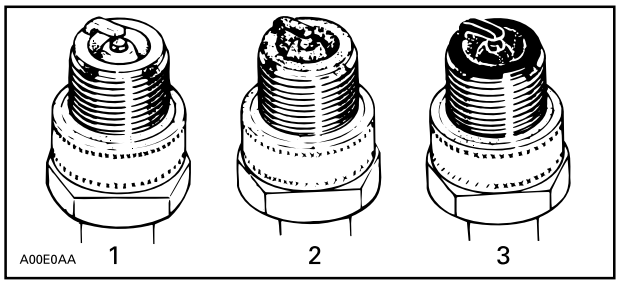


***TYPICAL***
*1. Overheated (light gray, white)*
*2. Normal (light brown, brown)*
*3. Fouled (black, wet or dry, dark deposits, gray, melted coating)*

The plug face reveals the condition of the engine, operating condition, method of driving and fuel mixture. For this reason it is advisable to inspect the spark plug at prescribed intervals, examining the plug face (i.e. the part of the plug projecting into the combustion chamber).

### *Installing the Spark Plug*

Prior to installation make sure that contact surfaces of the cylinder head and spark plug are free of grime.

1. Use a wire gauge to confirm electrode gap is as specified. Refer to *Technical Specifications* subsection.

**NOTE:** If spark plug gap is incorrect, use another spark plug.

2. Hand screw spark plug into cylinder head, then tighten with a torque wrench and an appropriate socket.

| Tightening Torque | |
|---|---|
| Spark plug | 13 ± 1 Nm<br>(115 ± 9 lbf-in) |

3. Install ignition coil.

# Notes

## Technician's Notes

## Related Documents

| Bulletins | |
|---|---|
| | |
| | |
| | |
| | |
| | |
| | |
| | |
| | |
| | |
| | |
| | |
| | |
| | |
| **Instruction Sheets** | |
| | |
| | |
| | |
| | |
| | |
| | |
| | |
| | |
| | |
| | |
| | |
| | |
| **Other** | |
| | |
| | |
| | |
| | |
| | |
| | |
| | |
| | |
| | |
| | |
| | |
| | |

05

# TECHNICAL SPECIFICATIONS

# 05 Technical Specifications

## Engine - 600 ACE

| Engine | | | |
|---|---|---|---|
| Engine type | | | ROTAX® 600 ACE<br>4-stroke, double overhead camshaft (DOHC), dry sump, liquid cooled |
| Number of cylinders | | | 2 |
| Number of valves | | | 4 valves per cylinder (self adjusting hydraulic valve lifters) |
| Bore | | | 74 mm<br>(2.91 in) |
| Stroke | | | 69.7 mm<br>(2.74 in) |
| Displacement | | | 599.54 cm³<br>(36.59 in³) |
| Compression ratio | | | 12.0 : 1 |
| Maximum HP RPM | | | 7250 ± 100 RPM |
| Intake valve opening | | | 3° BTDC |
| Intake valve closing | | | 37° ABDC |
| Exhaust valve opening | | | 44° BBDC |
| Exhaust valve closing | | | 6° ATDC |
| Valve stem diameter | Intake | New | 4.958 to 4.972 mm<br>(.1952 to .1957 in) |
| | | Service limit | 4.94 mm<br>(.1945 in) |
| | Exhaust | New | 4.956 to 4.970 mm<br>(.1951 to .1957 in) |
| | | Service limit | 4.94 mm<br>(.194 in) |
| Valve guide inner diameter | | New | 4.992 to 5.012 mm<br>(.1965 to .1973 in) |
| | | Service limit | 5.050 mm<br>(.1988 in) |

Midwest Manuals
Green Manuals
Paperless Manuals
For a Better Tomorrow
www.green-manuals.com
If you bought this manual from any other seller please leave them
NEGATIVE feedback and notify us at bestshopmanuals@gmail.com

| Engine | | | |
|---|---|---|---|
| Valve spring free length | | New | 31.35 mm (1.2343 in) |
| | | Service limit | 29.50 mm (1.1614 in) |
| Valve seat contact width | Intake | New | 1.05 to 1.35 mm (.0413 to .0531 in) |
| | | Service limit | 1.70 mm (.067 in) |
| | Exhaust | New | 1.25 to 1.45 mm (.0492 to .0571 in) |
| | | Service limit | 1.80 mm (.071 in) |
| Piston measurement | | New | 73.95 to 73.966 mm (2.9114 to 2.912 in) |
| | | Service limit | 73.92 mm (2.91 in) |
| Piston/cylinder wall clearance | | New | 0.037 to 0.067 mm (.0015 to .0026 in) |
| | | Service limit | 0.08 mm (.0031 in) |
| Piston ring type | | 1st | Upper compression ring, rectangular |
| | | 2nd | Lower compression ring, tapered face |
| | | 3rd | Oil scraper ring |
| Ring end gap | Rectangular | New | 0.20 to 0.35 mm (.0079 to .0138 in) |
| | | Service limit | 1.20 mm (.0472 in) |
| | Taper-face | New | 0.30 to 0.50 mm (.0118 to .0197 in) |
| | | Service limit | 1.20 mm (.0472 in) |
| | Oil scraper ring | New | 0.20 to 0.70 mm (.0079 to .0276 in) |
| | | Service limit | 1.20 mm (.0472 in) |

| Engine | | | |
|---|---|---|---|
| Ring/piston groove clearance | Rectangular | New | 0.030 to 0.066 mm (.0012 to .0026 in) |
| | | Service limit | 0.12 mm (.0047 in) |
| | Taper-face | New | 0.020 to 0.056 mm (.0008 to .0022 in) |
| | | Service limit | 0.12 mm (.0047 in) |
| | Oil scraper ring | New | 0.010 to 0.040 mm (.0004 to .0016 in) |
| | | Service limit | 0.15 mm (.0059 in) |
| Cylinder bore | | New | 74.003 to 74.017 mm (2.9135 to 2.9141 in) |
| Cylinder taper | | Maximum New | 0.030 mm (.0012 in) |
| | | Service limit | 0.05 mm (.002 in) |
| Cylinder out of round | | Maximum New | 0.008 mm (.0003 in) |
| | | Service limit | 0.03 mm (.0012 in) |
| Camshaft bearing journal diameter | PTO | New | 25.947 to 25.960 mm (1.0215 to 1.022 in) |
| | | Service limit | 25.92 mm (1.0205 in) |
| | MAG/Center | New | 22.947 to 22.960 mm (.9034 to .9039 in) |
| | | Service limit | 22.92 mm (.9024 in) |
| Camshaft holder bore diameter | PTO | New | 26.00 to 26.021 mm (1.0236 to 1.0244 in) |
| | | Service limit | 26.05 mm (1.0256 in) |
| | MAG/Center | New | 23.00 to 23.021 mm (.9055 to .9063 in) |
| | | Service limit | 23.05 mm (.9075 in) |

| Engine | | | |
|---|---|---|---|
| Camshaft journal radial play | PTO/Center/MAG | New | 0.040 to 0.074 mm (.0016 to .0029 in) |
| | | Service limit | 0.090 mm (.0035 in) |
| Camshaft lobe height | Intake | New | 38.70 to 38.90 mm (1.5236 to 1.5315 in) |
| | | Service limit | 38.68 mm (1.5228 in) |
| | Exhaust | New | 39.40 to 39.60 mm (1.5512 to 1.5591 in) |
| | | Service limit | 39.38 mm (1.5504 in) |
| Hydraulic valve lifter diameter | | New | 28.354 to 28.370 mm (1.1163 to 1.1169 in) |
| | | Service limit | 28.340 mm (.093 ft) |
| Hydraulic valve lifter radial clearance | | Service limit | 0.100 mm (.0039 in) |
| Crankshaft bearing journal diameter | | New | 35.990 to 36.006 mm (1.4169 to 1.4176 in) |
| | | Service limit | 35.960 mm (1.4157 in) |
| Crankshaft radial play | | Service limit | 0.080 mm (.0031 in) |
| Crankshaft axial play | | New | 0.120 - 0.392 mm (.0047 - .0154 in) |
| | | Service limit | 0.450 mm (.0177 in) |
| Crankshaft pin diameter | | New | 35.979 to 35.995 mm (1.416 to 1.417 in) |
| | | Service limit | 35.969 mm (1.416 in) |
| Crankshaft deflection | MAG | Maximum | 0.050 mm (.002 in) |
| | Center | Maximum | 0.050 mm (.002 in) |
| | PTO | Maximum | 0.050 mm (.002 in) |

| Engine | | | |
|---|---|---|---|
| Crankshaft plain bearing inside diameter | Service limit | | 36.08 mm<br>(1.4205 in) |
| Connecting rod big end diameter | Service limit | | 36.06 mm<br>(1.4197 in) |
| Connecting rod big end radial play | Service limit | | 0.08 mm<br>(.0031 in) |
| Connecting rod big end axial play | New | | 0.100 to 0.352 mm<br>(.0039 to .0139 in) |
| | Service limit | | 0.450 mm<br>(.0177 in) |
| Connecting rod small end diameter | New | | 17.010 to 17.020 mm<br>(.6697 to .6701 in) |
| | Service limit | | 17.060 mm<br>(.6717 in) |
| Piston pin diameter | New | | 16.996 to 17.000 mm<br>(.6691 to .6693 in) |
| | Service limit | | 16.986 mm<br>(.6687 in) |
| Connecting rod small end radial play | Service limit | | 0.04 mm<br>(.0016 in) |

| Cooling System | | | |
|---|---|---|---|
| Coolant | Type | Recommended | BRP Extended Life Pre-Mixed Coolant |
| | | Alternative, or if not available | Ethyl glycol and distilled water (50%/50%) or coolant specifically formulated for aluminum engines |
| | Quantity | | 5.0 l<br>(1.32 gal(liq.,US)) |
| Thermostat opening temperature | | | 75 °C<br>(167 °F) |
| Radiator cap opening pressure | | | 110 kPa<br>(16 lbf/in²) |

| **Lubrication System** | | | |
|---|---|---|---|
| Lubrication | Type | | Dry sump. Replaceable oil filter |
| | Oil filter | | BRP Rotax paper type, replaceable |
| | Minimum engine oil pressure | | 60 kPa (8.7 lbf/in²) @ idle speed |
| | | | 350 kPa (50.8 lbf/in²) @ 4000 to 7250 RPM |
| | Engine oil | Capacity (oil change with filter) | 2.1 l (2.22 qt(liq.,US)) |
| | | Recommended | XPS 4T 0W40 synthetic oil |
| | | Alternative, or if not available | SAE 0W 40 API service SN synthetic oil |

| **Fuel System** | | | |
|---|---|---|---|
| Fuel injection type | | | Mulitpoint fuel injection |
| Throttle body type | | | 46 mm heated Dell'Orto throttle body with iTC (intelligent Throttle Control) |
| Idle speed | Normal idle | Standard/ ECO mode | 1500 ± 100 RPM |
| | | Sport | 1650 ± 100 RPM |
| | Fast idle at -40 °C (-40 °F) | | 2100 ± 100 RPM |
| Fuel | | Type | Regular Unleaded |
| | | Octane Rating | 87 AKI ((R+M)/2) |
| | | | 92 (RON) |

| **Electrical System** | | |
|---|---|---|
| Magneto generator output | Except Skandic and Tundra | 420 W @ 6000 RPM @ 14 V |
| | Skandic and Tundra | 650 W @ 6000 RPM @ 14 V |
| Magneto stator resistance (between any pair of yellow wires) | | 0.1 to 1 Ohm @ 20 °C (68 °F) |
| Ignition type | | IDI (Inductive Digital Ignition) |

| Electrical System | | |
|---|---|---|
| Ignition timing | | Not adjustable |
| Spark plug | Make and type | NGK MR7BI-8 |
| | Gap | 0.7 to 0.8 mm (.028 to .031 in) |
| Ignition coil | Primary | 0.79 to 0.97 Ω |
| Maximum power engine speed | | 7250 ± 200 RPM |

# Engine - 900 ACE

| Engine | | | |
|---|---|---|---|
| Engine type | | | ROTAX® 900 ACE<br>4-stroke, double overhead camshaft (DOHC), dry sump, liquid cooled |
| Number of cylinders | | | 3 |
| Number of valves | | | 4 valves per cylinder (self adjusting hydraulic valve lifters) |
| Bore | | | 74 mm<br>(2.91 in) |
| Stroke | | | 69.7 mm<br>(2.74 in) |
| Displacement | | | 899.31 cm³<br>(54.88 in³) |
| Compression ratio | | | 12.0 : 1 |
| Maximum HP RPM | | | 7300 ± 100 RPM |
| Intake valve opening | | | 5° ATDC |
| Intake valve closing | | | 40° ABDC |
| Exhaust valve opening | | | 40° BBDC |
| Exhaust valve closing | | | 5° BTDC |
| Valve stem diameter | Intake | New | 4.958 to 4.972 mm<br>(.1952 to .1957 in) |
| | | Service limit | 4.940 mm<br>(.1945 in) |
| | Exhaust | New | 4.956 to 4.970 mm<br>(.1951 to .1957 in) |
| | | Service limit | 4.940 mm<br>(.1945 in) |
| Valve guide inner diameter | | New | 4.992 to 5.012 mm<br>(.1965 to .1973 in) |
| | | Service limit | 5.050 mm<br>(.1988 in) |

Midwest Manuals
Green Manuals
Paperless Manuals
For a Better Tomorrow
www.green-manuals.com
If you bought this manual from any other seller please leave them
NEGATIVE feedback and notify us at bestshopmanuals@gmail.com

| Engine | | | |
|---|---|---|---|
| Valve out of round | | New | 0.005 mm (.0002 in) |
| | | Service limit | 0.060 mm (.0024 in) |
| Valve spring free length | | New | 31.35 mm (1.2343 in) |
| | | Service limit | 29.50 mm (1.1614 in) |
| Valve seat contact width | Intake | New | 1.05 to 1.35 mm (.0413 to .0531 in) |
| | | Service limit | 1.70 mm (.0669 in) |
| | Exhaust | New | 1.25 to 1.45 mm (.0492 to .0571 in) |
| | | Service limit | 1.80 mm (.0709 in) |
| Cylinder head warpage | | Service limit | 0.15 mm (.0059 in) |
| Piston measurement | | New | 73.950 to 73.966 mm (2.9114 to 2.912 in) |
| | | Service limit | 73.920 mm (2.9102 in) |
| Piston/cylinder wall clearance | | New | 0.037 to 0.067 mm (.0015 to .0026 in) |
| | | Service limit | 0.080 mm (.0031 in) |
| Piston ring type | | 1st | Upper compression ring, rectangular |
| | | 2nd | Lower compression ring, tapered face |
| | | 3rd | Oil scraper ring |

| Engine | | | |
|---|---|---|---|
| Ring end gap | Rectangular | New | 0.20 to 0.35 mm (.0079 to .0138 in) |
| | | Service limit | 1.20 mm (.0472 in) |
| | Taper-face | New | 0.30 to 0.50 mm (.0118 to .0197 in) |
| | | Service limit | 1.20 mm (.0472 in) |
| | Oil scraper ring | New | 0.20 to 0.70 mm (.0079 to .0276 in) |
| | | Service limit | 1.20 mm (.0472 in) |
| Ring/piston groove clearance | Rectangular | New | 0.030 to 0.066 mm (.0012 to .0026 in) |
| | | Service limit | 0.120 mm (.0047 in) |
| | Taper-face | New | 0.020 to 0.056 mm (.0008 to .0022 in) |
| | | Service limit | 0.120 mm (.0047 in) |
| | Oil scraper ring | New | 0.010 to 0.040 mm (.0004 to .0016 in) |
| | | Service limit | 0.150 mm (.0059 in) |
| Cylinder bore | | New | 74.003 to 74.017 mm (2.9135 to 2.9141 in) |
| Cylinder taper | | Maximum New | 0.030 mm (.0012 in) |
| | | Service limit | 0.050 mm (.002 in) |
| Cylinder out of round | | Maximum New | 0.008 mm (.0003 in) |
| | | Service limit | 0.03 mm (.0012 in) |

| Engine | | | |
|---|---|---|---|
| Camshaft bearing journal diameter | PTO | New | 25.967 to 25.980 mm (1.0223 to 1.0228 in) |
| | | Service limit | 25.940 mm (1.0213 in) |
| | Center | New | 22.957 to 22.970 mm (.9038 to .9043 in) |
| | | Service limit | 22.930 mm (.9028 in) |
| | MAG | New | 22.967 to 22.980 mm (.9042 to .9047 in) |
| | | Service limit | 22.940 mm (.9031 in) |
| Camshaft holder bore diameter | PTO | New | 26.00 to 26.021 mm (1.0236 to 1.0244 in) |
| | | Service limit | 26.05 mm (1.0256 in) |
| | MAG/Center | New | 23.00 to 23.021 mm (.9055 to .9063 in) |
| | | Service limit | 23.05 mm (.9075 in) |
| Camshaft journal radial clearance | PTO/MAG | New | 0.020 to 0.054 mm (.0008 to .0021 in) |
| | | Service limit | 0.080 mm (.0031 in) |
| | Center | New | 0.030 to 0.064 mm (.0012 to .0025 in) |
| | | Service limit | 0.090 mm (.0035 in) |
| Camshaft lobe height | Intake | New | 38.35 to 38.55 mm (1.51 to 1.518 in) |
| | | Service limit | 38.33 mm (1.509 in) |
| | Exhaust | New | 38.35 to 38.55 mm (1.51 to 1.518 in) |
| | | Service limit | 38.33 mm (1.509 in) |

| Engine | | | |
|---|---|---|---|
| Hydraulic valve lifter diameter | | New | 28.354 to 28.370 mm (1.1163 to 1.1169 in) |
| | | Service limit | 28.340 mm (.093 ft) |
| Hydraulic valve lifter radial clearance | | Service limit | 0.100 mm (.0039 in) |
| Crankshaft bearing journal diameter | | New | 35.990 to 36.006 mm (1.4169 to 1.4176 in) |
| | | Service limit | 35.960 mm (1.4157 in) |
| Crankshaft radial play | | Service limit | 0.08 mm (.003 in) |
| Crankshaft axial play | | New | 0.120 to 0.353 mm (.0047 to .0139 in) |
| | | Service limit | 0.450 mm (.0177 in) |
| Crankshaft deflection | MAG | Maximum | 0.050 mm (.002 in) |
| | Center | Maximum | 0.050 mm (.002 in) |
| | PTO | Maximum | 0.080 mm (.003 in) |
| Crankshaft plain bearing inside diameter | | Service limit | 36.08 mm (1.4205 in) |
| Connecting rod big end diameter | | Service limit | 36.06 mm (1.4197 in) |
| Connecting rod big end radial play | | Service limit | 0.08 mm (.0031 in) |
| Connecting rod big end axial play | | New | 0.100 to 0.352 mm (.0039 to .0139 in) |
| | | Service limit | 0.450 mm (.0177 in) |
| Connecting rod small end diameter | | New | 17.010 to 17.020 mm (.6697 to .6701 in) |
| | | Service limit | 17.060 mm (.6717 in) |

| Engine | | |
|---|---|---|
| Piston pin diameter | New | 16.996 to 17.000 mm (.6691 to .6693 in) |
| | Service limit | 16.986 mm (.6687 in) |
| Connecting rod small end radial play | Service limit | 0.04 mm (.0016 in) |
| Chain guide groove depth | Service limit | 1 mm (.039 in) |
| Oil pressure regulator spring free length | New | 46 mm (1.811 in) |
| | Service limit | 45 mm (1.772 in) |
| Oil pump radial clearance | Service limit | 0.25 mm (.0098 in) |
| Oil pump axial clearance | Service limit | 0.15 mm (.0059 in) |

| Cooling System | | | |
|---|---|---|---|
| Coolant | Type | Recommended | BRP Extended Life Pre_Mixed Coolant |
| | | Alternative, or if not available | Ethyl glycol and distilled water (50%/ 50% coolant specifically formulated for aluminum engines |
| | Quantity | | 6 l (1.59 gal(liq.,US)) |
| Thermostat opening temperature | | | 75 °C (167 °F) |
| Coolant tank cap opening pressure | | | 110 kPa (16 lbf/in²) |

| Lubrication System | |
|---|---|
| Type | Dry sump. Replaceable oil filter |
| Oil filter | BRP Rotax paper type, replaceable |

| **Lubrication System** | | | |
|---|---|---|---|
| Engine oil pressure at 100 °C (212 °F) engine oil temperature | | At idle | 60 kPa (8.7 lbf/in²) |
| | | Between 4000 to 7250 RPM | 350 kPa (50.8 lbf/in²) |
| Engine oil | Capacity | Engine oil and engine oil filter replacement | 3.3 l (3.5 qt(liq.,US)) |
| | Type | Recommended | XPS 4T 0W40 synthetic oil |
| | | Alternative, or if not available | SAE 0W 40 API service SM synthetic oil |

| **Fuel System** | | | |
|---|---|---|---|
| Fuel injection type | | | Multipoint fuel injection |
| Throttle body type | | | 46 mm heated Dell'Orto throttle body with iTC (intelligent Throttle Control) |
| Idle speed | Normal idle | Standard/ECO Mode | 1300 ± 100 RPM |
| | | Sport Mode | 1500 ± 100 RPM |
| | Fast idle at -40 °C (-40 °F) | | 1850 ± 100 RPM |
| Fuel | | Type | Regular Unleaded |
| | | Octane Rating | 87 AKI ((R+M)/2) |
| | | | 92 (RON) |

| **Electrical System** | | |
|---|---|---|
| Magneto generator output | Expedition Sport<br>Grand Touring Sport<br>Renegade | 420 W @ 6000 RPM @ 14 V |
| | Expedition LE/SE/SWT<br>Grand Touring Limited<br>Skandic | 650 W @ 6000 RPM @ 14 V |
| Magneto stator resistance (between any pair of yellow wires) | | 0.1 to 1 Ohm @ 20 °C (68 °F) |
| Ignition type | | IDI (Inductive Digital Ignition) |
| Ignition timing | | Not adjustable |

| Electrical System | | |
|---|---|---|
| Spark plug | Make and type | NGK MR8BI-8 |
| | Gap | 0.70 to 0.80 mm (.028 to .031 in) |
| Ignition coil | Primary | 0.79 to 0.97 Ω |
| Maximum power engine speed | | 7250 ± 200 RPM |

# Engine - 900 ACE Turbo

| Engine | | | |
|---|---|---|---|
| Engine | | Type | ROTAX® 900 ACE TURBO |
| | | Configuration | 4-stroke, double overhead camshaft (DOHC), dry sump,liquid cooled |
| | | Declination | 130 HP Turbo w/o Intercooler (GEN2) |
| | | | 180 HP Turbo with Intercooler (GEN2) |
| Number of cylinders | | | 3 |
| Number of valves | | | 4 valves per cylinder (self adjusting hydraulic valve lifters) |
| Bore | | | 74 mm (2.91 in) |
| Stroke | | | 69.7 mm (2.74 in) |
| Displacement | | | 899.31 cm³ (54.88 in³) |
| Compression ratio | | | 9.1 ± 0.3 |
| Maximum HP RPM | | 130 HP Turbo w/o Intercooler (GEN2) | 7400 ± 100 RPM |
| | | 180 HP Turbo with Intercooler (GEN2) | 7900 ± 100 RPM |
| Intake valve opening | | | 5° ATDC |
| Intake valve closing | | | 25° ABDC |
| Exhaust valve opening | | | 40° BBDC |
| Exhaust valve closing | | | 5° BTDC |
| Valve stem diameter | Intake | New | 4.958 to 4.972 mm (.1952 to .1957 in) |
| | | Service limit | 4.940 mm (.1945 in) |
| | Exhaust | New | 4.956 to 4.970 mm (.1951 to .1957 in) |
| | | Service limit | 4.940 mm (.1945 in) |

Midwest Manuals
Green Manuals
Paperless Manuals For a Better Tomorrow www.green-manuals.com
If you bought this manual from any other seller please leave them NEGATIVE feedback and notify us at bestshopmanuals@gmail.com

| Engine | | | |
|---|---|---|---|
| Valve out of round | | New | 0.005 mm (.0002 in) |
| | | Service limit | 0.060 mm (.0024 in) |
| Valve guide inner diameter | | New | 4.992 to 5.012 mm (.1965 to .1973 in) |
| | | Service limit | 5.050 mm (.1988 in) |
| Valve spring free length | | New | 31.35 mm (1.2343 in) |
| | | Service limit | 29.50 mm (1.1614 in) |
| Valve seat contact width | Intake | New | 1.05 to 1.35 mm (.041 to .053 in) |
| | | Service limit | 1.70 mm (.067 in) |
| | Exhaust | New | 1.25 to 1.45 mm (.049 to .057 in) |
| | | Service limit | 1.80 mm (.071 in) |
| Cylinder head warpage | | Service limit | 0.15 mm (.0059 in) |
| Piston diameter | | New | 73.950 to 73.966 mm (2.9114 to 2.912 in) |
| | | Service limit | 73.920 mm (2.9102 in) |
| Piston/cylinder clearance | | New | 0.037 to 0.067 mm (.0015 to .0026 in) |
| | | Service limit | 0.080 mm (.0031 in) |
| Piston ring type | | 1st | Upper compression ring, rectangular |
| | | 2nd | Lower compression ring, tapered face |
| | | 3rd | Oil scraper ring |

| Engine | | | |
|---|---|---|---|
| Ring end gap | Rectangular | New | 0.20 to 0.35 mm (.008 to .014 in) |
| | Tapered face | | 0.30 to 0.50 mm (.012 to .02 in) |
| | Oil scraper ring | | 0.20 to 0.70 mm (.008 to .028 in) |
| | Rectangular | Service limit | 1.20 mm (.047 in) |
| | Tapered face | | 1.20 mm (.047 in) |
| | Oil scraper ring | | 1.20 mm (.047 in) |
| Ring/piston groove clearance | Rectangular | New | 0.030 to 0.066 mm (.0012 to .0026 in) |
| | Tapered face | | 0.020 to 0.056 mm (.0008 to .0022 in) |
| | Oil scraper ring | | 0.010 to 0.040 mm (.0004 to .0016 in) |
| | Rectangular | Service limit | 0.120 mm (.0047 in) |
| | Tapered face | | 0.120 mm (.0047 in) |
| | Oil scraper ring | | 0.150 mm (.0059 in) |
| Cylinder bore | | New | 74.003 to 74.017 mm (2.9135 to 2.9141 in) |
| Cylinder taper | | Maximum New | 0.030 mm (.0012 in) |
| | | Service limit | 0.050 mm (.002 in) |
| Cylinder out of round | | Maximum New | 0.008 mm (.0003 in) |
| | | Service limit | 0.030 mm (.0012 in) |

| Engine | | | |
|---|---|---|---|
| Camshaft bearing journal diameter | PTO | New | 25.967 to 25.980 mm (1.0223 to 1.0228 in) |
| | | Service limit | 25.940 mm (1.0213 in) |
| | Center | New | 22.957 to 22.970 mm (.9038 to .9043 in) |
| | | Service limit | 22.930 mm (.9028 in) |
| | MAG | New | 22.967 to 22.980 mm (.9042 to .9047 in) |
| | | Service limit | 22.940 mm (.9031 in) |
| Camshaft holder bore diameter | PTO | New | 26.000 to 26.021 mm (1.024 to 1.024 in) |
| | | Service limit | 26.050 mm (1.026 in) |
| | MAG/Center | New | 23.000 to 23.021 mm (.906 to .906 in) |
| | | Service limit | 23.050 mm (.907 in) |
| Camshaft journal radial clearance | PTO and MAG | New | 0.020 to 0.054 mm (.001 to .002 in) |
| | | Service limit | 0.080 mm (.003 in) |
| | Center | New | 0.03 to 0.064 mm (.001 to .003 in) |
| | | Service limit | 0.090 mm (.004 in) |
| Camshaft lobe height | Intake | New | 37.40 to 37.60 mm (1.472 to 1.48 in) |
| | | Service limit | 37.38 mm (1.472 in) |
| | Exhaust | New | 38.35 to 38.55 mm (1.51 to 1.518 in) |
| | | Service limit | 38.33 mm (1.509 in) |

| Engine | | | |
|---|---|---|---|
| Hydraulic valve lifter diameter | | New | 28.354 to 28.370 mm (1.1163 to 1.1169 in) |
| | | Service limit | 28.340 mm (1.1157 in) |
| Hydraulic valve lifter radial clearance | | Service limit | 0.100 mm (.0039 in) |
| Crankshaft bearing journal diameter | | New | 35.990 to 36.006 mm (1.4169 to 1.4176 in) |
| | | Service limit | 35.960 mm (1.4157 in) |
| Crankshaft radial play | | Service limit | 0.08 mm (.0031 in) |
| Crankshaft axial play | | New | 0.120 to 0.352 mm (.005 to .014 in) |
| | | Service limit | 0.450 mm (.018 in) |
| Crankshaft pin diameter | | New | 35.979 to 35.995 mm (1.4165 to 1.4171 in) |
| | | Service limit | 35.969 mm (1.4161 in) |
| Crankshaft deflection | MAG | Maximum | 0.050 mm (.002 in) |
| | Center | | 0.050 mm (.002 in) |
| | PTO | | 0.050 mm (.002 in) |
| Crankshaft plain bearing inner diameter | | Service limit | 36.080 mm (1.4205 in) |
| Connecting rod big end diameter | | Service limit | 36.06 mm (1.4197 in) |
| Connecting rod big end radial play | | Service limit | 0.08 mm (.0031 in) |
| Connecting rod big end axial play | | New | 0.100 to 0.352 mm (.004 to .014 in) |
| | | Service limit | 0.450 mm (.018 in) |

| Engine | | |
|---|---|---|
| Connecting rod small end diameter | New | 18.010 to 18.020 mm (.7091 to .7094 in) |
| | Service limit | 18.060 mm (.711 in) |
| Piston pin diameter | New | 17.996 to 18.00 mm (.7085 to .7087 in) |
| | Service limit | 17.986 mm (.7081 in) |
| Connecting rod small end radial clearance | Service limit | 0.040 mm (.0016 in) |
| Chain guide groove depth | Service limit | 1 mm (.039 in) |
| Oil pressure regulator spring free length | New | 46 mm (1.811 in) |
| | Service limit | 45 mm (1.772 in) |
| Oil pump radial clearance | Service limit | 0.25 mm (.0098 in) |
| Oil pump axial clearance | Service limit | 0.15 mm (.0059 in) |

| Lubrication System | | | |
|---|---|---|---|
| Type | | | Dry sump |
| Oil filter | | | Replaceable cartridge oil filter |
| Minimum engine oil pressure at 100 °C (212 °F) oil temperature | | At idle | 100 kPa (14.5 lbf/in²) |
| | | At 4000 RPM | 300 kPa (43.51 lbf/in²) |
| | | Between 6000 to 8000 RPM | 400 kPa (58.02 lbf/in²) |
| Engine oil | Capacity | Engine oil and engine oil filter replacement | 3.3 l (3.5 qt(liq.,US)) |
| | Type | Recommended | XPS 4T 0W40 synthetic oil |
| | | Alternative, or if not available | 4-stroke SAE 0W40 synthetic oil meeting specifications API service classification SM or SN |

| Cooling System | | | |
|---|---|---|---|
| Coolant | Type | Recommended | XPS Extended Life Pre-Mixed Coolant |
| | | Alternative, or if not available | Ethyl glycol/water mix (50%/50%) coolant specifically designed for aluminum engines |
| Thermostat | Starts to open | | 75 °C (167 °F) |
| | Fully open | | 95 °C (203 °F) |

| Turbo Charger | | |
|---|---|---|
| Rotor shaft bearing leakage test | Service limit | 50% |
| Rotor radial clearance | Service limit | Minimum of 0.1 mm (.004 in) |
| Rotor shaft axial clearance | Service limit | Maximum of 0.1 mm (.004 in) |
| Movement of waste gate actuator rod | 130 HP (GEN2) | At 43 kPa (6.24 lbf/in²) air pressure - 1 ± 0.5 mm (.039 ± .02 in) movement |
| | | At 57 kPa (8.27 lbf/in²) air pressure - 5 ± 0.8 mm (.197 ± .031 in) movement |
| | 180 HP (GEN2) | At 70 kPa (10.15 lbf/in²) air pressure - 1 ± 0.5 mm (.039 ± .02 in) movement |
| | | At 107.5 kPa (15.59 lbf/in²) air pressure - 5 ± 0.8 mm (.197 ± .031 in) movement |
| Turbine flange warpage | Service limit | Maximum of 0.1 mm (.004 in) |

| **Fuel System** | | | |
|---|---|---|---|
| Fuel injection type | | | Electronic Fuel Injection (EFI) , 1 injector per cylinder |
| Throttle body type | | | 46 mm heated throttle body with iTC (Intelligent Throttle Control) |
| Idle speed | Normal idle | Standard/ECO mode | 1200 ± 100 RPM (not adjustable) |
| | | SPORT mode | 1500 ± 100 RPM (not adjustable) |
| | Fast idle at -40 °C (-40 °F) | | 1850 RPM ± 100 RPM (not adjustable) |
| Fuel | Type | | Premium Unleaded |
| | Octane Rating | | 91 AKI ((R+M)/2) |
| | | | 95 (RON) |

| **Electrical System** | | |
|---|---|---|
| Magneto generator output | Renegade series w/o Smart-Shox | 420 W @ 6000 RPM @ 14 V |
| | All other | 650 W @ 6000 RPM @ 14 V |
| Magneto stator resistance (between any pair of yellow wires) | | 0.1 to 1 Ohm @ 20 °C (68 °F) |
| Ignition type | | IDI (Inductive Discharge Ignition) |
| Ignition timing | | Not adjustable |
| Spark plug | Make and type | NGK LMAR9AI-8D |
| | Gap | 0.7 to 0.8 mm (.028 to .031 in) |
| Ignition coil | Primary | 0.80 to 0.97 Ω |
| Maximum power engine speed | 130 HP Turbo w/o Intercooler (GEN2) | 7400 ± 200 RPM |
| | 180 HP Turbo with Intercooler (GEN2) | 7900 ± 200 RPM |

# Notes

## Technician's Notes

## Related Documents

| Bulletins | |
|---|---|
| | |
| | |
| | |
| | |
| | |
| | |
| | |
| | |
| | |
| | |
| | |
| | |
| Instruction Sheets | |
| | |
| | |
| | |
| | |
| | |
| | |
| | |
| | |
| | |
| | |
| | |
| Other | |
| | |
| | |
| | |
| | |
| | |
| | |
| | |
| | |
| | |
| | |
| | |

(Expanded)

# Electronic Control Module (ECM) – Gen 2

## General

This section refers to the following ECM:

**Figure 1. ECM Gen 2**

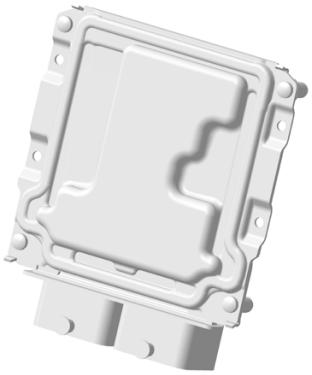

*ECM GEN 2*

The following tools are required to test most of the electrical parts.

| | |
|---|---|
| Fluke 115 Multimeter<br><br>(P/N 529035868) |  |
| ECM Adapter Tool Gen 2<br><br>(P/N 529036513) | 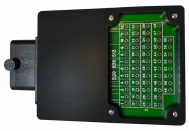 |

Refer to *Wiring Diagram Information* for diagnostic tips on troubleshooting electrical problems.

| NOTICE |
|---|
| **It is recommended to always disconnect the battery when replacing any electrical component. Always disconnect battery as specified, BLACK (-) cable first.** |

# System Description

## Electrical System

The ECM controls the engine operation and the vehicle power management.

To control the engine, the ECM reads the inputs from the sensors which it compares to predetermined parameters stored in the ECM (fuel and ignition maps), makes computations, and activates the outputs accordingly (injectors, ignition coils etc.).

# Troubleshooting

## Diagnostic Tips

**IMPORTANT**: When solving an electrical problem, the first thing to do is to check the battery condition as well as its cables and connections.

Make sure the battery is fully charged or install a power pack for any tests that involve a prolonged "key ON" period. If battery voltage gets too low, not only test results can be altered, but the vehicle electrical system may not operate normally.

Pay attention to ground wires. They could become loose or corroded which causes them to act as an additional load in a circuit, dropping voltage and reducing current to components. Some components may be grounded through their outer casing and mounted hardware. This should also be considered.

### Electrical Connectors

Pay particular attention to ensure that pins are not out of their connectors, loose, or damaged. The troubleshooting procedures may not cover problems resulting from one of these causes.

When probing terminals, pay attention not to deform the terminals as this could cause a loose or intermittent connection that would be difficult to troubleshoot.

**NOTE:** Do not apply dielectric grease or other lubricants on the ECM connectors.

| NOTICE |
| --- |
| **Ensure all terminals are properly crimped on wires and connector housings are properly fastened. When replacing any electric or electronic part(s), always check electrical connections. Make sure that they are clean, corrosion-free, tight and make good contact. The voltage and current might be too weak to go through dirty or corroded connector pins or terminals.** |

# Procedures

## Engine Control Module (ECM)

**NOTE:** As a first troubleshooting step, always check for applicable fault codes using the BRP diagnostic software (BUDS2).

### Locating the ECM

The ECM is located under the upper body module. Refer to *Body* subsection for procedure.

**Figure 2. ECM Location – Parts removed for clarity**

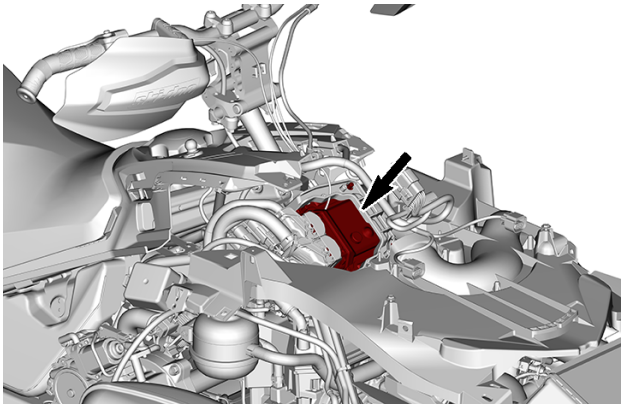

***ECM LOCATION – PARTS REMOVED FOR CLARITY***

### ECM Connector Identification

There are 2 connectors connected to the ECM:

– Engine harness connected to ECM-A
– Vehicle system control harness connected to ECM-B.

**Figure 3. ECM Gen 2 Connector Identification, Front Side**

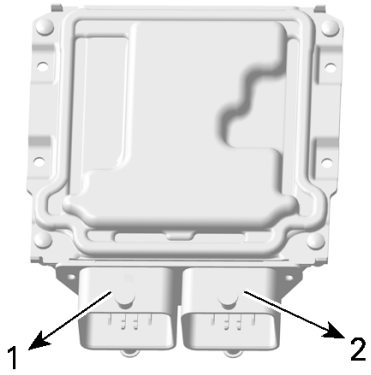


***ECM GEN 2 CONNECTOR IDENTIFICATION, FRONT SIDE***

1. *Connector ECM-A*
2. *Connector ECM-B*

**Figure 4. ECM Gen 2 Connector Identification, Back Side**

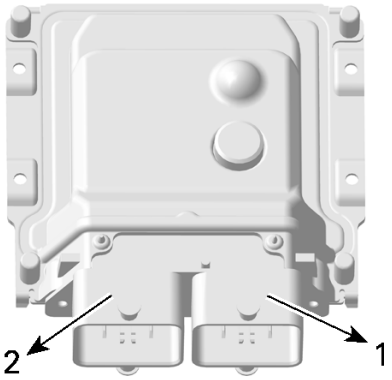


*ECM GEN 2 CONNECTOR IDENTIFICATION, BACK SIDE*

1. *Connector ECM-A*
2. *Connector ECM-B*

Each ECM connector has 56 pins.

**NOTE:** For connector information, cleaning and probing, refer to *Wiring Harness and Connectors* subsection.

## Quick Test to Validate ECM Operation

Briefly press **Start** button.

This should wake up the ECM. The ECM will then activate relay 1 for approximately 12 seconds after which it will turn off all power.

If the D.E.S.S. key is installed when the **Start** button is pressed, the power will stay on for approximately 5 minutes.

| **Quick Indication That ECM is Powered (Assuming the Observed Component is Working)** |
|---|
| Multifunction gauge comes ON. |
| Fuel pump turns on for approx. 2 seconds (if key on D.E.S.S. post installed). |

If ECM does not turn on, check the following:

– Fuse FA (Main) and F4 (ECM)
– Battery voltage. Refer to *Charging System* subsection.
– Relay RY1 (Main)
– **Start** button. Refer to *Starting System* subsection.
– ECM power circuit wires and ground wires.

For testing of fuses and relay, refer to *Power Distribution and Grounds* subsection.

**NOTE:** When relay is not working, the ECM and the complete vehicle electrical system will not be powered.

## ECM First Initialization

This procedure performs a reset of the following values in the ECM:

– TAS (Throttle Accelerator Sensor)
– TPS (Throttle Position Sensor) integrated in the ETC (Electronic Throttle Control)

This reset **must** be carried out whenever the ECM has been replaced.

This reset **may** be carried out whenever any of the following components have been replaced instead of their respective reset procedures:

– Throttle Body (For TPS).

1. Connect the vehicle to the latest applicable BRP diagnostic software version. Refer to *Communication Tools* subsection.
2. In BUDS2, go to:
   – **Settings** page
   – **ECM** button
   – **ECM First Initialization**.
3. In the **ECM First Initialization** field, click on the **Reset** button.
4. Follow the instructions in the message boxes that appear.

   If the operation is successful, a message will be displayed stating that the reset was successful.

   If an error occurred or a component is out of range, a message may be displayed. Follow the instructions in the message and repeat the procedure.
5. Check for fault codes.

   If a fault code is generated, carry out the service actions, reset the fault and repeat the reset procedure.
6. Start engine and make sure it operates normally throughout its full engine RPM range.

## Testing the ECM Wake Up Circuit

1. Disconnect ECM-B connector and connect it to the ECM adapter tool.
2. Set the multimeter to Vdc.
3. While pressing the **Start** button, read voltage as follows.

| ECM Wake Up Circuit Test | | |
|---|---|---|
| **ECM Adapter** | **Chassis** | **Results** |
| Pin 4 | GND | Close to battery voltage |

If voltage is as per specification, refer to *Testing the ECM Power Supply* in this subsection.

If voltage is out of specification:

– Test the **Start** button, refer to *Starting System* subsection.
– If the **Start** button tests good, test wiring and connectors from battery to ECM. Refer to *Wiring Diagram*.

## Testing the ECM Power Supply

1. Disconnect ECM-B connector and connect it to the ECM adapter tool.
2. Turn the ignition switch to ON.
3. Set the multimeter to Vdc.
4. Check for voltage as follows.

| ECM Power Supply Test | | |
|---|---|---|
| **ECM Adapter** | **Battery** | **Results** |
| Pin 4-55<br>Pin 4–56 | Negative (-) post | Close to battery voltage |

If voltage is out of specification, check the following:

– Main relay

– Wiring and connections. Refer to *Wiring Diagram*.

## Testing the Continuity of ECM Ground Circuits

1. Connect ECM-B connector on the ECM adapter tool.
2. Set multimeter to Ω and probe adapter terminals as per following table.

| ECM Ground Circuit Test | | |
|---|---|---|
| **ECM Adapter** | **Battery** | **Results** |
| Pin 4–51<br>Pin 4–52<br>Pin 4–53<br>Pin 4–54 | Negative (-) post | Close to 0 Ω (continuity) |

If any measurement is out of specification refer to *Power Distribution and Grounds* subsection and check the following:

– Wiring and connections
– Engine ground
– Battery ground
– Frame ground.

## Replacing the ECM

Prior to replacing an ECM, ensure that all the recommendations in the general introduction of this section have been followed.

**NOTE:** Proceed with an *ECM First Initialization* as it may resolve the problem.

If the ECM and the digital display are both to be replaced, always replace the digital display first.

## Removing the ECM

**NOTE:** If a new ECM is to be installed, first read the procedures in *Replacing the ECM* in this subsection.

1. Disconnect battery cables.

| NOTICE |
|---|
| **Always disconnect the BLACK negative (-) battery cable first, then disconnect RED positive (+) cable.** |

2. Disconnect both ECM connectors from ECM.
3. Unscrew all retaining screws and pull out ECM.

**Figure 5. ECM Fasteners**

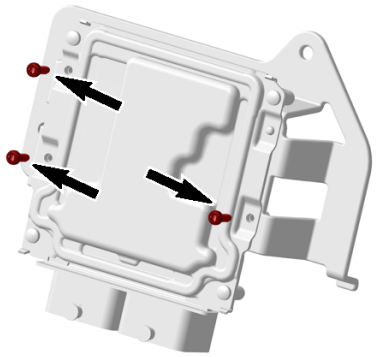

*ECM FASTENERS*

## Installing the ECM

The installation is the reverse of the removal procedure. However, pay attention to the following.

1. Align bracket pin with location bore and place ECM onto the bracket. Tighten retaining screws to specification.

**Figure 6. ECM Installation**

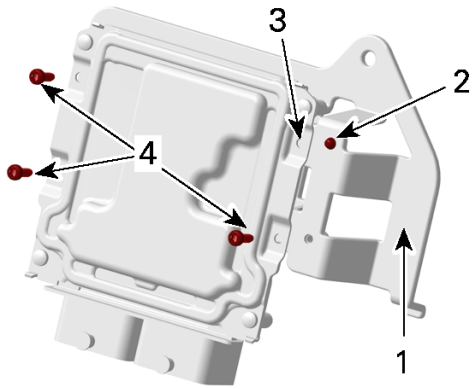


*ECM INSTALLATION*

1. *Bracket*
2. *Bracket pin*
3. *Location bore*
4. *Retaining screws*

| Tightening Torque | |
|---|---|
| ECM screws new bracket | 2.2 ± 0.2 Nm<br>(19 ± 2 lbf-in) |
| ECM screws reused bracket | 1.8 ± 0.2 Nm<br>(16 ± 2 lbf-in) |

2. Reconnect ECM connectors.
3. Reconnect battery cables.

| NOTICE |
| --- |
| **Always reconnect the RED positive (+) battery cable first, then reconnect BLACK negative (-) cable.** |

4. If a new ECM is installed, refer to *Replacing the ECM* in this subsection.

## Programming the ECM

1. Connect the vehicle to the BRP diagnostic software (BUDS2)
2. In BUDS2, click the **Scan** button to read the new ECM.
3. Select:
   - **Summary** page
   - **ECM** button
   - **Health** tab
   - **Programming the ECM**.
4. Follow the instructions on screen.
5. Perform the **Throttle Position Sensor Initialization** procedure.
6. Start the engine and ensure proper operation.
7. Reinstall removed parts.

# Pairing the Engine Cut-off Switch (D.E.S.S Post)

This procedure must be performed when the vehicle is equipped with the following ECM.

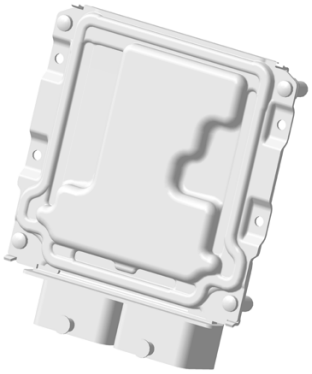

When the engine cut-off switch and/or the ECM are replaced, it is mandatory to pair these components together to allow vehicle key(s) recognition.

1. With the vehicle connected to the BRP diagnostic software (BUDS2), select the following:
   - **Summary** page
   - **Vehicle** button
   - **Health** tab
2. Double click on the message “IMOB is not Initialized”.

   The message “KEY NOT INITIALIZED” is also indicated in the lower part of the screen.

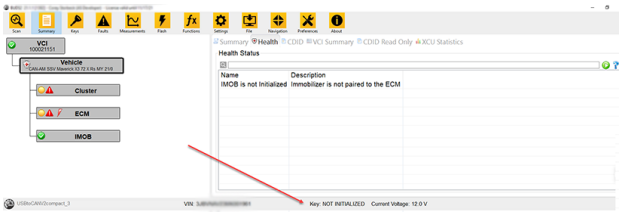


3. Press “YES” in the new box to launch the procedure.

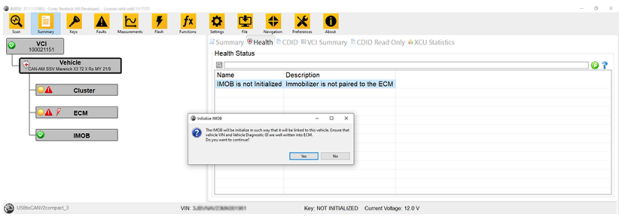


4. Press “OK” to close the next box that confirm that the procedure is successful.

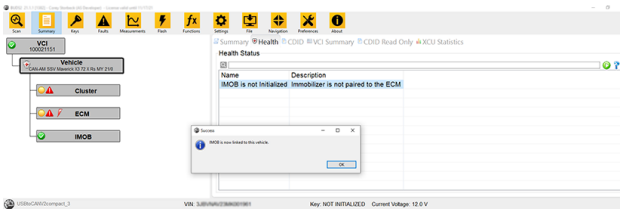


5. Remove the D.E.S.S. key from the post to complete the procedure.
6. Reinstall the key and return in BUDS2.
7. The message is gone and “KEY ON” is now indicated in the lower part of the screen.




8. Programming extra keys is now possible.

# DIAGNOSTIC AND FAULT CODES

## GENERAL

**Some newer fault codes are only available on the BRP dealer only site, most can be found with a Google search**

### FAULT CODE TABLES

| PCODE | MODULE | DESCRIPTION | CAUSE | ACTION |
|---|---|---|---|---|
| P0106 | ECM | Manifold air pressure sensor voltage not plausible. | Vacuum leakage between throttle body and plenum (ex: rubber hose disconnected, loose screws, missing gasket at cylinder head flange, missing injector o-rings, cracks) Air intake duct or filter severely clogged MAPTS sensor Defective Damaged circuit wires, damaged connector or damaged ECM pins, ECM voltage supply. | Make sure sensor connector is fully inserted. Measure voltage between harness connector MAPTS-1and MAPTS-3 (expected value: 4.8 to 5.1 volts). |
| P0107 | ECM | Manifold air pressure sensor voltage too low. | Voltage on system circuit MAPTS-4 reached a low value. Sensor may be disconnected. Circuit wires MAPTS-3 or MAPTS-4 may be disconnected. MAPTS-4 is shorted to ground No 5 volts supply on MAPTS-3 circuit. Damaged sensor. | Make sure sensor's connector is fully inserted. Measure voltage between harness connector MAPTS-1 and MAPTS-3 with the vehicle turned on (expected value: 4.8 to 5.1 volts) Check continuity between ECMA-H2 and MAPTS-1. Check continuity between ECMA-B4 and MAPTS-3. Check continuity between ECMA-G4 and MAPTS-4. |
| P0108 | ECM | Manifold air pressure sensor voltage too high. | Voltage on system circuit MAPTS-4 reached a high value. Circuit wire MAPTS-4 shorted to a supply Circuit wire MAPTS-1 is not connected. Damaged sensor. | Make sure sensor's connector is fully inserted. Measure voltage between harness connector MAPTS-1 and MAPTS-3 with the vehicle turned on (expected value: 4.8 to 5.1 volts) Check continuity between ECMA-H2 and MAPTS-1. Check continuity between ECMA-B4 and MAPTS-3. Check continuity between ECMA-G4 and MAPTS-4. |

| PCODE | MODULE | DESCRIPTION | CAUSE | ACTION |
|---|---|---|---|---|
| P0112 | ECM | Manifold air temperature sensor voltage too high. | Voltage on system circuit MAPTS-2 reached a high value. Sensor may be disconnected. Circuit wires MAPTS-1 or MAPTS-2 may be disconnected. Damaged sensor. | Make sure sensor's connector is fully inserted. If it is correct then disconnect it and perform the following tests. Check MAPTS sensor pins 1 and 2 for approximately 2280 to 2736 ohms at 19 to 21°C (66 to 70°F). If the sensor resistivity is out of range replace the sensor. Check system circuits ECMA-H3 for continuity to terminal 2 of the MAPTS sensor. Check system circuits ECMA-H2 for continuity to terminal 1 of the MAPTS sensor. |
| P0113 | ECM | Manifold air temperature sensor voltage too low. | Voltage on system circuit MAPTS-2 reached a low value. System circuit MAPTS-2 shorted to ground. Damaged sensor. | Disconnect the sensor and check for a change in the fault code. If the fault code stays the same, look for a short circuit on the harness. If the fault code is different, replace the sensor. Check MAPTS sensor pins 1 and 2 for approximately 2280 to 2736 ohms at 19 to 21°C (66 to 70°F). If the sensor resistivity is out of range replace the sensor. If the sensor resistivity is correct according to the specified temperature range then check circuit wire MAPTS-2 for a short to the ground. |
| P0117 | ECM | Engine coolant temperature sensor voltage too high. | Voltage on system circuit CTS-2 reached a high value. Sensor may be disconnected. Circuit wires CTS-1 or CTS-2 may be disconnected. Circuit CTS-2 shorted to 5 or 12 volts. Damaged sensor. | Make sure sensor's connector is fully inserted. Check system circuit ECMA-1A for continuity to terminal 1 of the CTS connector and ECMA-J2 for continuity to terminal 2 of the CTS connector. Check CTS resistivity on the sensor pins for approximately 2280 to 2736 ohms at 19 to 21°C (66 to 70°F). If the sensor resistivity is out of range replace the sensor. |

Midwest Manuals
Green Manuals
Paperless Manuals
For a Better Tomorrow
If you bought this manual from any other seller please leave them NEGATIVE feedback and notify me at bestshopmanuals@gmail.com

| PCODE | MODULE | DESCRIPTION | CAUSE | ACTION |
|---|---|---|---|---|
| P0118 | ECM | Engine coolant temperature sensor voltage too low. | Voltage on system circuit CTS-2 reached a low value. Circuit wire CTS-2 shorted to ground. Damaged sensor. | Disconnect the sensor and check for a change in the fault code. If the fault code stays the same, look for a short circuit on the harness. If the fault code is different, replace the sensor. Check system circuit CTS-2 for resistivity to ground (Expected value = 1.2 Kohms when ECMA connector is still connected). Check system circuit ECMA-1A for continuity to terminal 1 of the CTS connector and ECMA-J2 for continuity to terminal 2 of the CTS connector. Check CTS sensor pins for approximately 2280 to 2736 ohms at 19 to 21°C (66 to 70°F). If the sensor resistivity is out of range replace the sensor. |
| P0122 | ECM | First Throttle Accelerator Sensor (TAS) Short circuit to GND | Damaged circuit wires, damaged throttle position sensor or damaged ECM pins. | Make sure sensor connector is fully inserted. Measure resistance from connector: ECMB-K1 to TAS-D (expected value: < 2 ohms). Measure resistance from connector: ECMB-K3 to TAS-E (expected value: < 2 ohms). Measure resistance from connector: ECMB-E1 to TAS-F (expected value: < 2 ohms). |
| P0123 | ECM | First Throttle Accelerator Sensor (TAS) shorted to supply | Damaged circuit wires, damaged throttle position sensor or damaged ECM pins. | Make sure sensor connector is fully inserted. Measure resistance from connector: ECMB-K1 to TAS-D (expected value: < 2 ohms). Measure resistance from connector: ECMB-K3 to TAS-E (expected value: < 2 ohms). Measure resistance from connector: ECMB-E1 to TAS-F (expected value: < 2 ohms). |

| PCODE | MODULE | DESCRIPTION | CAUSE | ACTION |
|---|---|---|---|---|
| P0127 | ECM | Torque reduction due to high manifold air temperature. | Temperature detected by the MAPTS sensor exceeded the maximum limit. Could happen during extended idling at high ambient temperatures or very low speed with load | |
| P0201 | ECM | Injector Cyl. #1 (PTO) open circuit. | Circuit wires INJ1-1 or INJ1-2 open circuit. Blown fuse. Disconnected injector connector. Disconnected HIC connector. Injector coil open circuit, | Check fuel injector fuse. Make sure injector connector is fully inserted. Make sure HIC connector is connected. Check system circuit ECMA-B3 for continuity to pin 2 of INJ1 connector. Check system circuit INJ-1 for continuity to the fusebox. Check injector resistivity for approximately 14.5 ohms. |
| P0202 | ECM | Injector Cyl. #2 (MAG) open circuit. | Circuit wires INJ2-1 or INJ2-2 open circuit. Blown fuse. Disconnected injector connector. Disconnected HIC connector. Injector coil open circuit. | Check fuel injector fuse. Make sure injector connector is fully inserted. Make sure HIC connector is connected. Check system circuit ECMA-K1 for continuity to pin 2 of INJ1 connector. Check system circuit INJ-1 for continuity to the fusebox. Check injector resistivity for approximately 14.5 ohms. |
| P0217 | ECM | Torque reduction due to high engine coolant temperature. | Warm riding condition, lack of cooling. | Check coolant level. Check for air pocket in cooling system. |
| P0222 | ECM | 2nd Throttle Accelerator Sensor (TAS) shorted to GND | Damaged circuit wires, damaged throttle position sensor or damaged ECM pins. | Make sure sensor connector is fully inserted. Measure resistance from connector: ECMB-J3 to TAS-A (expected value: < 2 ohms). Measure resistance from connector: ECMB-B3 to TAS-B (expected value: < 2 ohms). Measure resistance from connector: ECMB-A3 to TAS-C (expected value: < 2 ohms). |

| PCODE | MODULE | DESCRIPTION | CAUSE | ACTION |
|---|---|---|---|---|
| P0223 | ECM | 2nd Throttle Accelerator Sensor (TAS) shorted to supply | Damaged circuit wires, damaged throttle position sensor, or damaged ECM pins. | Make sure sensor connector is fully inserted. Measure resistance from connector: ECMB-J3 to TAS-A (expected value: < 2 ohms). Measure resistance from connector: ECMB-B3 to TAS-B (expected value: < 2 ohms). Measure resistance from connector: ECMB-A3 to TAS-C (expected value: < 2 ohms). |
| P0231 | ECM | Fuel pump open circuit or shorted to ground. | There is no load on circuit wire ECMB-M1 or it is shorted to ground. Blown fuse. Fuel pump connector is not connected. Fuel pump motor is open. | Check fuse. Make sure the fuel pump connector is fully inserted. Open ECM ACTIVATION page in B.U.D.S. Activate fuel pump and check if it reacts as expected. With vehicule power ON check voltage on FP-C connector (Expected value = battery voltage). Check system circuit ECMB-M1 for continuity to FP-A connector. Measure resistance between FP-C and FP-A (expected value: < 2 ohms) |
| P0232 | ECM | Fuel pump shorted to battery. | Circuit wire ECMB-M1 is shorted to 12 volts. Fuel pump motor is stuck or shorted. | Disconnect the fuel pump and check if the fault disapears. If it does then replace the fuel pump. Ckeck if system circuits FP-A and FP-C are shorted together. |
| P0261 | ECM | Injector Cyl. #1 (PTO) shorted to ground. | Circuit wire INJ1-1 is shorted to ground. | Disconnect injector 1. Measure resistance between injector pin 1 and 2 (Expected value = 10 to 15 ohms). With vehicule power ON and engine not running, check the voltage on pin 2 of the INJ2 connector (Expected value = around 3.3 volts). If the voltage is close to 12 volts check for a short to 12 volts on this circuit. |

| PCODE | MODULE | DESCRIPTION | CAUSE | ACTION |
|---|---|---|---|---|
| P0262 | ECM | Injector Cyl. #1 (PTO) shorted to battery. | Circuit wire INJ1-1 is shorted to battery. Injector coil is shorted. | Disconnect injector 1. Measure resistance between injector pin 1 and 2 (Expected value = 10 to 15 ohms). With vehicule power ON and engine not running, check the voltage on pin 2 of the INJ2 connector (Expected value = around 3.3 volts). If the voltage is close to 12 volts check for a short to 12 volts on this circuit. |
| P0264 | ECM | Injector Cyl. #2 (MAG) shorted to ground. | Circuit wire INJ2-1 is shorted to ground. Injector coil is open | Disconnect injector 2. Measure resistance between injector pin 1 and 2 (Expected value = 10 to 15 ohms). With vehicule power ON and engine not running, check the voltage on pin 2 of the INJ2 connector (Expected value = around 3.3 volts). If the voltage is close to 12 volts check for a short to 12 volts on this circuit. |
| P0265 | ECM | Injector Cyl. #2 (MAG) shorted to battery. | Circuit wire INJ2-1 is shorted to battery. Injector coil is shorted. | Disconnect injector 2. Measure resistance between injector pin 1 and 2 (Expected value = 10 to 15 ohms). With vehicule power ON and engine not running, check the voltage on pin 2 of the INJ2 connector (Expected value = around 3.3 volts). If the voltage is close to 12 volts check for a short to 12 volts on this circuit. |
| P0335 | ECM | Crankshaft signal fault. | Slow engine cranking due to low battery voltage Intermittent signal from crankshaft position sensor. Damaged circuit wires, damaged sensor. Sensor may not be properly secured. | Verify that the battery is properly charged Make sure sensor connector is fully inserted. Measure resistance from connector: ECMA-H1 to CPS-1 (Expected value: < 2 ohms). Measure resistance from connector: ECMA-K2 to CPS-2 (Expected value: < 2 ohms). |

| PCODE | MODULE | DESCRIPTION | CAUSE | ACTION |
|---|---|---|---|---|
| P0340 | ECM | Engine phase determination error. | CAPS signal not plausible, damaged circuit wires, damaged connector or damaged tooth wheel. | Make sure sensor connector is fully inserted. Measure voltage between harness connector CAPS-3 and CAPS-1 (expected value: 11 to 13 volts). Measure resistance between connector ECMA-E2 to CAPS-2. (expected value : <2 ohms) |
| P0359 | ECM | Ignition coil Cyl. #2 (MAG) shorted to battery. | Circuit wire IGN2-3 is shorted to battery. Ignition coil is damaged. | Disconnect ignition coil #2. With vehicule power ON and engine not running check voltage on pin 3 of IGN2 connector. (Expected value = 0 volt). If voltage is close to 12 volts, check for a short on this circuit. |
| P0360 | ECM | Ignition coil Cyl. #1 (PTO) shorted to battery. | Circuit wire IGN1-3 is shorted to battery. Ignition coil is damaged. | Disconnect ignition coil #1. With vehicule power ON and engine not running check voltage on pin 3 of IGN1 connector. (Expected value = 0 volt). If voltage is close to 12 volts, check for a short on this circuit. |
| P0361 | ECM | ECM ignition coil driver #2 (MAG) fault | Ignition coil or HIC connector not connected or damaged. Blown fuse. Broken wire or terminal. | Check if HIC connector connected. Check ignition fuse. Check circuit wire IGN2-3. |
| P0362 | ECM | ECM ignition coil driver #1 (PTO) fault | Ignition coil or HIC connector not connected or damaged. Blown fuse. Broken wire or terminal. | Check if HIC connector connected. Check ignition fuse. Check circuit wire IGN1-3. |
| P0480 | ECM | Fan relay circuit | Blown fuse, damaged or disconnected relay, damaged circuit wires, damaged connectors or damaged ECM output pins. | Check fuse. Disconnect Fan relay. Measure voltage between harness connector CFM-4 and ground (expected value: 11 to 13 volts). Measure resistance from harness connector: ECMB-J4 to CFM-2 (expected value: < 2 ohms). With the engine turned off measure voltage between CFM-2 and ground (expected value: 11 to 13 volts). Use BUDS to activate the fan and measure voltage between CFM-2 and ground (expected value: close to 0 volts). Check fuse F4 |

| PCODE | MODULE | DESCRIPTION | CAUSE | ACTION |
|---|---|---|---|---|
| P0513 | ECM | Invalid Access Key Detected | A non stored access key was detected when key switch was turned to ON. If no access key is available, program a new one and retry. | |
| P0520 | ECM | Engine oil pressure switch functional problem. | Defective oil pressure switch, damaged circuit wires, damaged connector or loose terminals, damaged ECM pins. | Measure resistance between harness connector EOP and ground when engine stopped (expected value < 2 ohms). Measure resistance between harness connector EOP and ground when engine running (expected value = open). Measure resistance from harness connector: EOP to ECMA-E3 (expected value: < 2 ohms). Check if HIC connector is properly connected (engine harness to the vehicle harness). |
| P0523 | ECM | Engine oil pressure switch sticking | Disconnected oil pressure switch Damaged oil pressure switch, damaged circuit wires, damaged connector, damaged ECM pins. | Measure resistance between harness connector EOP and ground when engine stopped (expected value < 2 ohms). Measure resistance between harness connector EOP and ground when engine running (expected value = open). Measure resistance from harness connector: EOP to ECMA-E3 (expected value: < 2 ohms). Check if HIC connector is properly connected (engine harness to the vehicle harness). |
| P0524 | ECM | Low oil pressure. | Oil level too low Engine mechanical problem Defective oil pressure switch, damaged circuit wires, damaged connector, damaged ECM pins. Vehicle was turned upside down with the engine running | Check oil level. Check system circuit ECMA-E3 for continuity to the terminal of the OPS connector. Check oil pressure. If the vehicle was turned upside down while the engine was running, delete the fault |
| P0560 | ECM | Non-plausibility error on system voltage | ECU internal failure in reading system voltage | Replace ECU if fault is persisting |

| PCODE | MODULE | DESCRIPTION | CAUSE | ACTION |
|---|---|---|---|---|
| P0562 | ECM | Battery voltage too low. | Battery voltage dropped under 11 volts. | Check battery voltage for 11 to 13 volts with engine stopped. Check battery voltage for 13.5 to 14.5 volts with engine speed above 2500 RPM. Check connections on regulator. Check charging system. |
| P0563 | ECM | Battery voltage too high. | Battery voltage exceeded 15.6 volts. | Check battery voltage for 11 to 13 volts with engine stopped. Check battery voltage for 13.5 to 14.5 volts with engine speed above 2500 RPM. Check connections on regulator. Check charging system. |
| P060D | ECM | Throttle Accelerator Sensor (TAS) signals not synchronized. | Throttle Accelerator Sensors (TAS) plausibility check error. | Make sure sensor connector is fully inserted. Check voltages on connector TAS-F and TAS-C. Voltage on pin TAS-F must be 2 times greater than voltage on pin TAS-C at any given position of the lever. Check for 5 volts on pin TAS-A and TAS-D. |
| P060E | ECM | Electrical Throttle Actuator (ETA) control fault | Damaged wiring harness Damaged TPS Damaged ECM | Disconnect throttle body Measure resistance between ETC pin 3 and 5 (expected value = 2 to 3 ohms). Disconnect ECMA. Measure resistance from harness connector: ETC-5 to ECMA-L1 (expected value: < 2 ohms). Measure resistance from harness connector: ETC-3 to ECMA-L2 (expected value: < 2 ohms). |
| P0610 | ECM | Variant Coding error. | Faulty variant coding, faulty programming, wrong ECM after replacement | |

| PCODE | MODULE | DESCRIPTION | CAUSE | ACTION |
|---|---|---|---|---|
| P062C | ECM | Loss of vehicle speed information from multifunction gauge. | ECM lost communication with the cluster.<br>Multifunction gauge may be disconnected.<br>Loss of power on the multidunction gauge.<br>Loss of communication with the multidunction gauge via the CAN bus.<br>CAN bus lines shorted together.<br>CAN bus line shorted to ground. | Make sure the multidunction gauge connector is fully inserted.<br>Check for bent pin on the cluster connector<br>Measure voltage between harness connector MG-8 and ground with the vehicle turned on (expected value: 11 to 13 volts).<br>Measure voltage between harness connector MG-9 and ground with the vehicle turned off (expected value: 11 to 13 volts).<br>Measure resistivity between harness connector MG-11 for continuity to the ground (Expected value < 2 ohms).<br>Check continuity between harness connector MG-24 and ECMB-C1<br>Check continuity between harness connector MG-23 and ECMB-C2<br>Resistance between harness connector MG-23 and MG-24 should be around 120 ohms<br>Verify that harness connector MG-23 and MG-24 are not shorted to ground or anything else |

Midwest Manuals
Green Manuals
Paperless Manuals
For a Better Tomorrow
If you bought this manual from any other seller please leave them NEGATIVE feedback and notify me at bestshopmanuals@gmail.com

| PCODE | MODULE | DESCRIPTION | CAUSE | ACTION |
|---|---|---|---|---|
| P0685 | ECM | Lighting relay circuit | Blown fuse, damaged or disconnected relay, damaged circuit wires, damaged connectors or damaged ECM output pins. | Check fuse. Disconnect lighting relay. Measure voltage between harness connector FB-D1 and ground (expected value: 11 to 13 volts). Measure voltage between harness connector FB-D2 and ground (expected value: 11 to 13 volts). Measure resistance from harness connector: ECMB-G1 to FB-C2 (expected value: < 2 ohms). With the engine turned off measure voltage between FB-C2 and ground (expected value: 11 to 13 volts). With the engine turned on measure voltage between FB-C2 and ground (expected value: close to 0 volts). Measure resistance between terminals 85 and 86 on the 2 relays (expected value: 70 to 90 ohms). |
| P0686 | ECM | Lighting relay circuit shorted to ground or open circuit | Blown fuse, damaged or disconnected relay, damaged circuit wires, damaged connectors or damaged ECM output pins. | Check fuse. Disconnect lighting relay. Measure voltage between harness connector FB-D1 and ground (expected value: 11 to 13 volts). Measure voltage between harness connector FB-D2 and ground (expected value: 11 to 13 volts). Measure resistance from harness connector: ECMB-G1 to FB-C2 (expected value: < 2 ohms). With the engine turned off measure voltage between FB-C2 and ground (expected value: 11 to 13 volts). With the engine turned on measure voltage between FB-C2 and ground (expected value: close to 0 volts). Measure resistance between terminals 85 and 86 on the 2 relays (expected value: 70 to 90 ohms). |

| PCODE | MODULE | DESCRIPTION | CAUSE | ACTION |
|---|---|---|---|---|
| P0687 | ECM | Lighting relay circuit shorted to battery + | Damaged relay, damaged circuit wires, damaged connector or damaged ECM output pins. | Check fuse. Disconnect lighting relay. Measure voltage between harness connector FB-D1 and ground (expected value: 11 to 13 volts). Measure voltage between harness connector FB-D2 and ground (expected value: 11 to 13 volts). Measure resistance from harness connector: ECMB-G1 to FB-C2 (expected value: < 2 ohms). With the engine turned off measure voltage between FB-C2 and ground (expected value: 11 to 13 volts). With the engine turned on measure voltage between FB-C2 and ground (expected value: close to 0 volts). Measure resistance between terminals 85 and 86 on the 2 relays (expected value: 70 to 90 ohms). |
| P0691 | ECM | Fan relay circuit shorted to ground or open circuit | Blown fuse, damaged or disconnected relay, damaged circuit wires, damaged connectors or damaged ECM output pins. | Check fuse. Disconnect Fan relay. Measure voltage between harness connector CFM-4 and ground (expected value: 11 to 13 volts). Measure resistance from harness connector: ECMB-J4 to CFM-2 (expected value: < 2 ohms). With the engine turned off measure voltage between CFM-2 and ground (expected value: 11 to 13 volts). Use BUDS to activate the fan and measure voltage between CFM-2 and ground (expected value: close to 0 volts). Check fuse F4 |

| PCODE | MODULE | DESCRIPTION | CAUSE | ACTION |
|---|---|---|---|---|
| P0692 | ECM | Fan relay circuit shorted to battery + | Damaged relay, damaged circuit wires, damaged connector or damaged ECM output pins. | Check fuse. Disconnect Fan relay. Measure voltage between harness connector CFM-4 and ground (expected value: 11 to 13 volts). Measure resistance from harness connector: ECMB-J4 to CFM-2 (expected value: < 2 ohms). With the engine turned off measure voltage between CFM-2 and ground (expected value: 11 to 13 volts). Use BUDS to activate the fan and measure voltage between CFM-2 and ground (expected value: close to 0 volts). Check fuse F4 |
| P1120 | ECM | Wrong ratio between both throttle position sensor (TPS) | Damaged wiring harness Damaged TPS Damaged ECM | Make sure the TPS connector is fully inserted. Reset TPS postion. Measure voltage between harness connector ETC-6 and ETC-2 with the vehicle turned on (expected value: 3.3 volts) Check for short between ETC-1 or ETC-4 and a supply or a ground Check continuity between harness connector ETC-1 and ECMA-F3 Check continuity between harness connector ETC-4 and ECMA-K3 Check continuity between harness connector ETC-6 and ECMA-K4 Check continuity between harness connector ETC-2 and ECMA-A2 |
| P160E | ECM | Electrical Throttle Actuator (ETA) control fault | Damaged wiring harness Damaged TPS Damaged ECM | Disconnect throttle body Measure resistance between ETC pin 3 and 5 (expected value = 2 to 3 ohms). Disconnect ECMA. Measure resistance from harness connector: ETC-5 to ECMA-L1 (expected value: < 2 ohms). Measure resistance from harness connector: ETC-3 to ECMA-L2 (expected value: < 2 ohms). |

| PCODE | MODULE | DESCRIPTION | CAUSE | ACTION |
|---|---|---|---|---|
| P1610 | ECM | Electrical Throttle Actuator (ETA) shorted to supply | Damaged ETC module, damaged circuit wires, damaged connector or damaged ECM output pins. | Disconnect ETC module. Check for a short between ECMA-L1 or ECMA-L2 and a supply Measure resistance from connector: ECMA-L1 to ETC-5 (expected value: < 2 ohms). Measure resistance from connector: ECMA-L2 to ETC-3 (expected value: < 2 ohms). |
| P1611 | ECM | Electrical Throttle Actuator (ETA) shorted to ground | Damaged ETC module, damaged circuit wires, damaged connector or damaged ECM output pins. | Disconnect ETC module. Check for a short between ECMA-1L or ECMA-L2 and gnd Measure resistance from connector: ECMA-L1 to ETC-5 (expected value: < 2 ohms). Measure resistance from connector: ECMA-L2 to ETC-3 (expected value: < 2 ohms). |
| P1612 | ECM | Electrical Throttle Actuator (ETA) signal not plausible | Damaged ETC module, damaged circuit wires, damaged connector or damaged ECM output pins. | Disconnect ETC module. Measure resistance from connector: ECMA-L1 to ETC-5 (expected value: < 2 ohms). Measure resistance from connector: ECMA-L2 to ETA-3 (expected value: < 2 ohms). |
| P1613 | ECM | Electrical Throttle Actuator (ETA) open electrical load | Damaged ETC module, damaged circuit wires, damaged connector or damaged ECM output pins. | Disconnect ETC module. Measure resistance from connector: ECMA-L1 to ETC-5 (expected value: < 2 ohms). Measure resistance from connector: ECMA-L2 to ETA-3 (expected value: < 2 ohms). Measure resistance between ETC-5 and ETC-3 (expected value < 5 ohms) |

| PCODE | MODULE | DESCRIPTION | CAUSE | ACTION |
|---|---|---|---|---|
| P1614 | ECM | Electronic throttle control (ETC) return spring check not passed | Throttle mechanical adjustment. No TPS reset after throttle body/ECM replacement. Damaged throttle body | Check throttle plate movement. Check idle stop for wear. Check throttle position sensor angle at idle, expected value 1-4.5 degrees Perform THROTTLE POSITION SENSOR RESET in B.U.D.S. with throttle grip accelerator not activated since at least 30 seconds. Refer to the SERVICE MANUAL for more details. |
| P1615 | ECM | Electronic throttle control (ETC) position deviation fault | Throttle mechanical adjustment. No TPS reset after throttle body/ECM replacement. | Check throttle plate movement. Check idle stop for wear. Check throttle position sensor angle at idle, expected value 1-4.5 degrees Perform THROTTLE POSITION SENSOR RESET in B.U.D.S. with throttle grip accelerator not activated since at least 30 seconds. Refer to the SERVICE MANUAL for more details. |
| P1616 | ECM | Electronic throttle control (ETC) check of limp-home position failed | Throttle mechanical stop. No TPS reset after throttle body/ECM replacement. | Check throttle plate movement. Check idle stop for wear. Check throttle position sensor angle at idle, expected value 1-4.5 degrees Perform THROTTLE POSITION SENSOR RESET in B.U.D.S. with throttle grip accelerator not activated since at least 30 seconds. Refer to the SERVICE MANUAL for more details. |
| P1619 | ECM | TPS adaptation failure | Wrong throttle body mechanical position during reset of closed TPS or no TPS reset after ECM replacement. | Check idle stop for wear. Perform THROTTLE POSITION SENSOR RESET in B.U.D.S. with throttle grip accelerator not activated since at least 30 seconds. |
| P1620 | ECM | TPS adaptation failure | Wrong throttle body mechanical position during reset of closed TPS or no TPS reset after ECM replacement. | Check idle stop for wear. Perform THROTTLE POSITION SENSOR RESET in B.U.D.S. with throttle grip accelerator not activated since at least 30 seconds. |

| PCODE | MODULE | DESCRIPTION | CAUSE | ACTION |
|---|---|---|---|---|
| P1621 | ECM | TPS adaptation cancelled lower mechanical stop failed | Throttle mechanical stop. No TPS reset after throttle body/ECM replacement. | Check idle stop for wear. Ensure throttle plate is against throttle stop. Check throttle Position sensor angle at idle. Perform THROTTLE POSITION SENSOR RESET in B.U.D.S. with throttle grip accelerator not activated since at least 30 seconds. Refer to the SERVICE MANUAL for more details. |
| P1622 | ECM | TPS adaptation failed | Throttle mechanical stop. No TPS reset after throttle body/ECM replacement. | Check idle stop for wear. Check throttle position sensor angle at idle. Perform THROTTLE POSITION SENSOR RESET in B.U.D.S. with throttle grip accelerator not activated since at least 30 seconds. Refer to the SERVICE MANUAL for more details. |
| P1672 | ECM | Accessories relay circuit shorted to battery + | Damaged relay, damaged circuit wires, damaged connector or damaged ECM output pins. | Check fuse. Disconnect lighting relay. Measure voltage between harness connector FB-C6 and ground (expected value: 11 to 13 volts). Measure voltage between harness connector FB-C5 and ground (expected value: 11 to 13 volts). Measure resistance from harness connector: ECMB-J2 to FB-D5 (expected value: < 2 ohms). With the engine turned off measure voltage between FB-D5 and ground (expected value: 11 to 13 volts). With the engine turned on measure voltage between FB-D5 and ground (expected value: close to 0 volts). Measure resistance between terminals 85 and 86 on the 2 relays (expected value: 70 to 90 ohms). |

| PCODE | MODULE | DESCRIPTION | CAUSE | ACTION |
|---|---|---|---|---|
| P1673 | ECM | Accessories relay circuit shorted to ground or open circuit | Blown fuse, damaged or disconnected relay, damaged circuit wires, damaged connectors or damaged ECM output pins. | Check fuse. Disconnect lighting relay. Measure voltage between harness connector FB-C6 and ground (expected value: 11 to 13 volts). Measure voltage between harness connector FB-C5 and ground (expected value: 11 to 13 volts). Measure resistance from harness connector: ECMB-J2 to FB-D5 (expected value: < 2 ohms). With the engine turned off measure voltage between FB-D5 and ground (expected value: 11 to 13 volts). With the engine turned on measure voltage between FB-D5 and ground (expected value: close to 0 volts). Measure resistance between terminals 85 and 86 on the 2 relays (expected value: 70 to 90 ohms). |
| P1674 | ECM | Accessories relay circuit | Blown fuse, damaged or disconnected relay, damaged circuit wires, damaged connectors or damaged ECM output pins. | Check fuse. Disconnect lighting relay. Measure voltage between harness connector FB-C6 and ground (expected value: 11 to 13 volts). Measure voltage between harness connector FB-C5 and ground (expected value: 11 to 13 volts). Measure resistance from harness connector: ECMB-J2 to FB-D5 (expected value: < 2 ohms). With the engine turned off measure voltage between FB-D5 and ground (expected value: 11 to 13 volts). With the engine turned on measure voltage between FB-D5 and ground (expected value: close to 0 volts). Measure resistance between terminals 85 and 86 on the 2 relays (expected value: 70 to 90 ohms). |
| P16C0 | ECM | ECU ADC plausibility check | Monitoring plausibility check failed. | Check for ECM fault. |
| P16C1 | ECM | ECU ADC test failed | Monitoring plausibility check failed. | Check for ECM fault. |

| PCODE | MODULE | DESCRIPTION | CAUSE | ACTION |
|---|---|---|---|---|
| P16C2 | ECM | ECU monitoring error | Monitoring plausibility check failed. | Check for ECM fault. |
| P16C3 | ECM | Throttle Accelerator Sensors (TAS) monitoring check fault | Monitoring plausibility check failed. | Check for ECM fault. |
| P16C4 | ECM | Engine speed monitoring check fault | Monitoring plausibility check failed. | Check for ECM fault. |
| P16C5 | ECM | Safety fuel cut-off activated monitoring check level 1 | Monitoring plausibility check failed. | Check for ECM fault. |
| P16C6 | ECM | Safety fuel cut-off activated monitoring check level 2 | Monitoring plausibility check failed. | Check for ECM fault. |
| P16C7 | ECM | Throttle valve plausibility check failed | Monitoring plausibility check failed. | Check for ECM fault. |
| P16C8 | ECM | Permitted throttle valve position monitoring check exceeded | Monitoring plausibility check failed. | Check for ECM fault. |
| P16C9 | ECM | function monitoring: monitoring of the emergency switch in level 2 (DFC_MoFEmgcySwOff) | Monitoring plausibility check failed. | Check for ECM fault. |
| P1790 | ECM | Driving mode selector switch | Driving mode selector switch has the up and down selection pressed at the same time | Check for a short between ECMB-D3 or ECO-A with ECM-A1 or ECO-B Check for a short between ECMB-E3 or ECO-C with ECM-A1 or ECO-B |
| P20EB | ECM | Main relay de-energized too late or sticking | Damaged circuit wires Damaged connectors Damaged ECM output pins Damaged main relay | Disconnect main relay. Measure resistance between terminals 85 and 86 on relay (expected value: 70 to 90 ohms). Measure resistance between terminals 30 and 87 on relay (expected value: open circuit). Disconnect relay and measure resistance between terminals FB-A4 and ground (expected value: open circuit). |

| PCODE | MODULE | DESCRIPTION | CAUSE | ACTION |
|---|---|---|---|---|
| P212C | ECM | Throttle position sensor #2 voltage too low. | Low voltage or short to ground on circuit wire ETC-4.<br>No 3.3 volts supply on ETC-6.<br>ETC-1 is shorted to ground<br>Damaged sensor. | Make sure the TPS connector is fully inserted.<br>Reset TPS postion.<br>Measure voltage between harness connector ETC-6 and ETC-2 with the vehicle turned on (expected value: 3.3 volts)<br>Check continuity between harness connector ETC-4 and ECMA-K3<br>Check continuity between harness connector ETC-6 and ECMA-K4<br>Check continuity between harness connector ETC-2 and ECMA-A2<br>Check for a short between ETC-4 and a supply |
| P212D | ECM | Throttle position sensor #2 voltage too high. | Voltage on circuit wire ETC-4 too high.<br>Circuit wire ETC-4 shorted to a supply.<br>Circuit wire ETC-2 is open. | Make sure the TPS connector is fully inserted.<br>Reset TPS postion.<br>Measure voltage between harness connector ETC-6 and ETC-2 with the vehicle turned on (expected value: 3.3 volts)<br>Check continuity between harness connector ETC-4 and ECMA-K3<br>Check continuity between harness connector ETC-6 and ECMA-K4<br>Check continuity between harness connector ETC-2 and ECMA-A2<br>Check for a short between ETC-4 and a supply |
| P2279 | ECM | Air leak from intake plenum | Cracked plenum<br>Leak in air intake system.<br>TPS learning position not done correctly.<br>MAP Sensor problem.<br>Throttle body air leakage. | Reset TPS postion.<br>Check for faulty Air Pressure Sensor.<br>Check for faulty TPS.<br>Check for cracked plenum.<br>Check for leak on the throttle body |
| P2299 | ECM | Throttle and break paddle are used at the same time | | |

| PCODE | MODULE | DESCRIPTION | CAUSE | ACTION |
|---|---|---|---|---|
| P2621 | ECM | Throttle position sensor #1 voltage too low. | Low voltage or short to ground on circuit wire ETC-1. No 3.3 volts supply on ETC-6. ETC-1 is shorted to ground Damaged sensor. | Make sure the TPS connector is fully inserted. Reset TPS postion. Measure voltage between harness connector ETC-6 and ETC-2 with the vehicle turned on (expected value: 3.3 volts) Check continuity between harness connector ETC-1 and ECMA-F3 Check continuity between harness connector ETC-6 and ECMA-K4 Check continuity between harness connector ETC-2 and ECMA-A2 Check for a short between ETC-1 and a supply |
| P2622 | ECM | Throttle position sensor #1 voltage too high. | Voltage on circuit wire ETC-1 too high. Circuit wire ETC-1 shorted to a supply. Circuit wire ETC-2 is open. | Make sure the TPS connector is fully inserted. Reset TPS postion. Measure voltage between harness connector ETC-6 and ETC-2 with the vehicle turned on (expected value: 3.3 volts) Check continuity between harness connector ETC-1 and ECMA-F3 Check continuity between harness connector ETC-6 and ECMA-K4 Check continuity between harness connector ETC-2 and ECMA-A2 Check for a short between ETC-1 and a supply |
| U0167 | ECM | No communication with DESS key. | Damaged circuit wires, damaged or disconnected DESS post, damaged DESS key. | Measure voltage between harness connector RFID-D and ground (expected value: 11 to 13 volts). Check continuity betweem hesness connector RFID-A and ECMB-F2 Check continuity betweem hesness connector RFID-B and ECMB-E4 Check continuity betweem hesness connector RFID-C and ECMB-B2 |

| PCODE | MODULE | DESCRIPTION | CAUSE | ACTION |
|---|---|---|---|---|
| U0400 | ECM | Variant coding failure software incompatibility | Faulty variant coding. Faulty programming. | Try updating the ECM. If the problem persists, make sure the ECM part number is correct for the model it is installed on. |
| U0426 | ECM | DESS key communication error. | Damaged circuit wires, damaged or disconnected DESS post, damaged DESS key. | Measure voltage between harness connector RFID-D and ground (expected value: 11 to 13 volts). Check continuity betweem hesness connector RFID-A and ECMB-F2 Check continuity betweem hesness connector RFID-B and ECMB-E4 Check continuity betweem hesness connector RFID-C and ECMB-B2 |
| U300A | ECM | State of the DESS key switch not plausible | Damaged wiring harness Damaged RFID module | Measure voltage between harness connector RFID-D and ground (expected value: 11 to 13 volts). Check continuity betweem hesness connector RFID-A and ECMB-F2 Check continuity betweem hesness connector RFID-B and ECMB-E4 Check continuity betweem hesness connector RFID-C and ECMB-B2 |

# WHAT'S NEW 2023


ROBIN MARTEL
GLOBAL PRODUCT MANAGER – SKI-DOO, GPS

STEVE COWING
MEDIA RELATIONS MANAGER - SNOWMOBILES




ski-doo

# SKI-DOO : WHAT'S NEW AGENDA

20 years ago, Ski-Doo dropped a bomb

# …And 20 years later, the REVolution continues










2003 | 2008 | 2013 | 2017 | 2023






# Introducing the REV Gen5 platform with specific designs tailored for Trail and Deep Snow riding



ARE YOU READY ?!?!

# The REV Gen5 Trail is simply AWESOME !

- HIGH-TECH MODERN LOOK
- UNMATCHED NIGHTTIME VISION
- REFINED RIDING EXPERIENCE





# The REV Gen5 Trail Platform is redesigned with next-level refinements!

## HIGH-TECH MODERN LOOK




CLUB BRP 2023

# The new tapered bodywork combines sleek aerodynamics with a refined cockpit



*Model shown with accessories*

# The new REV Gen5 Trail Platform is redesigned with next-level refinements!

## UNMATCHED NIGHTTIME VISION




CLUB BRP 2023


The new trail headlights with 4 high-performance LED modules
High-tech beauty with pure Ski-Doo DNA




Much more than a signature light!

# The new REV Gen5 Trail Platform is redesigned with next-level refinements!

## REFINED RIDING EXPERIENCE

Sound-reducing exhaust shield

Quieter and efficient CVT cooling system




Intuitive KYB Pro shocks adjustment

4th engine mount
*(also on Deep Snow version)*

CLUB BRP 2023

# The REV Gen5 trail design provides a more refined riding experience




## The relocation of the cold air intake for the CVT system reduces the sound level for the driver

# New sound-reducing panels for a quieter ride



**CVT acoustic layers and cold air duct**



**Exhaust acoustic panel assembly**

# Underneath the REV Gen5 skin, the refinement continues

**Adding a 4th engine mount**



*Also available on Deep Snow REV Gen5*

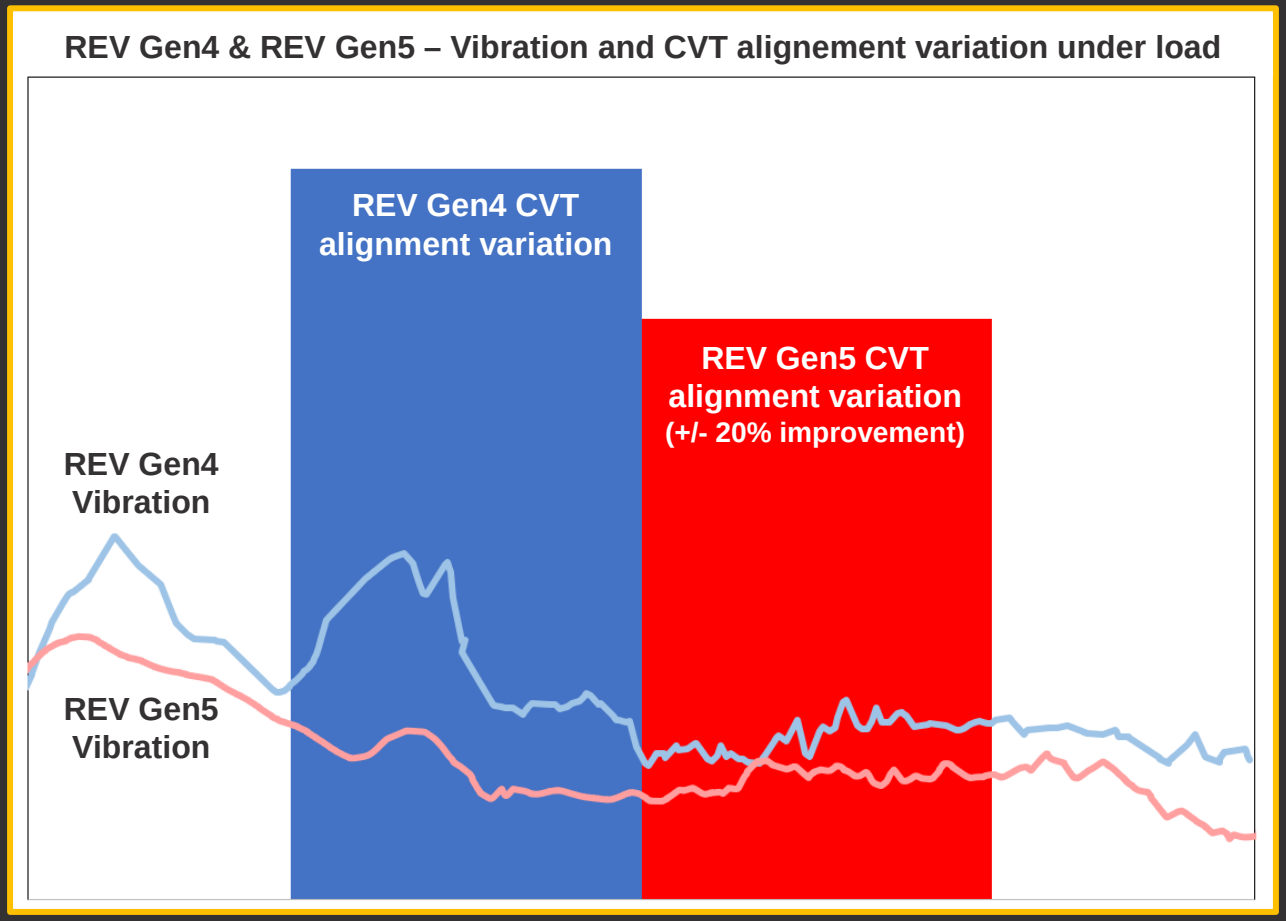


**Resulting in reduced vibration level, better CVT alignment and further improved belt life**

# New intuitive 3-positions compression adjustment clickers on the KYB Pro EA-3 shocks






# MY23 MXZ package offering

## NEW MXZ Blizzard

*replacing the TNT and X packages and available in-season*




In white: New features vs MY22 TNT package

## MXZ X-RS

*available during spring-only*

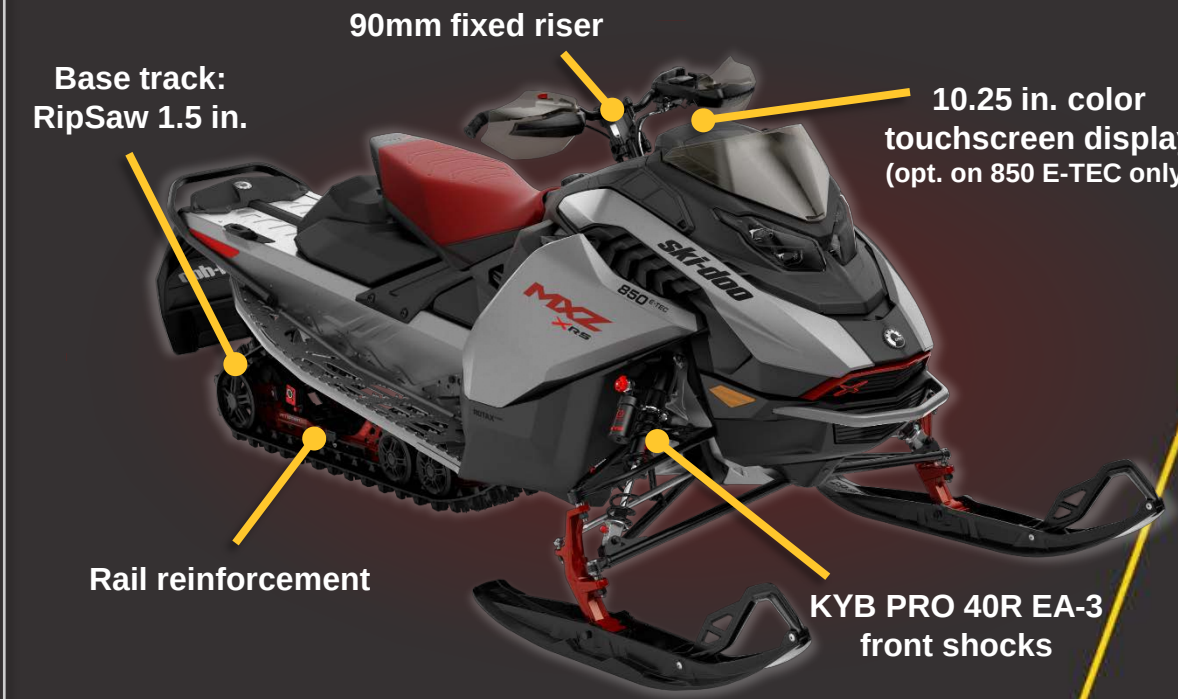


In white: New features vs MY22 X-RS package

**Revamping the MXZ into the ultimate trail performance weapon**

# REV Gen5 is available on select 850 E-TEC trail models



*MXZ Blizzard*



*MXZ X-RS*



*Renegade Adrenaline*



*Renegade X*



*Renegade X-RS*

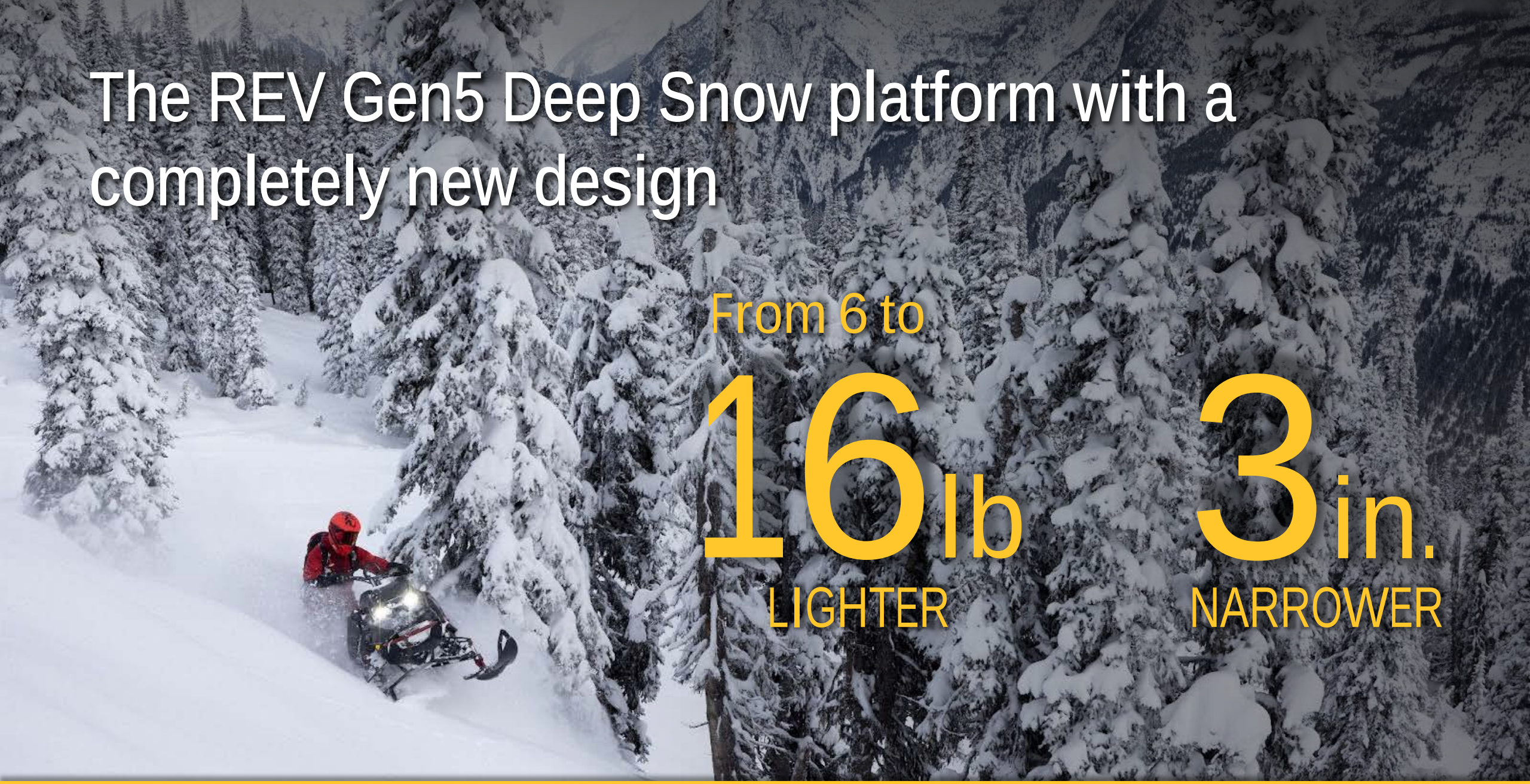
The REV Gen5 Deep Snow platform with a completely new design
From 6 to
16 lb
LIGHTER
3 in.
NARROWER
Delivering the most precise and predictable sidehilling

# The Deep Snow REV Gen5 is new from front to back!




Lighter tunnel radiator

Relocated spare belt

Flat console

Standard storage

Lightweight LED headlights

Lighter 3.0 in. track

Completely revised rear suspension

High-efficiency CVT cooling compartment

Quick-removal drive shaft
*(also on Trail version)*

Narrower running boards

Narrower bodywork

4th engine mount
*(also on Trail version)*

CLUB BRP 2023

# The Deep Snow REV Gen5 is new from front to back!

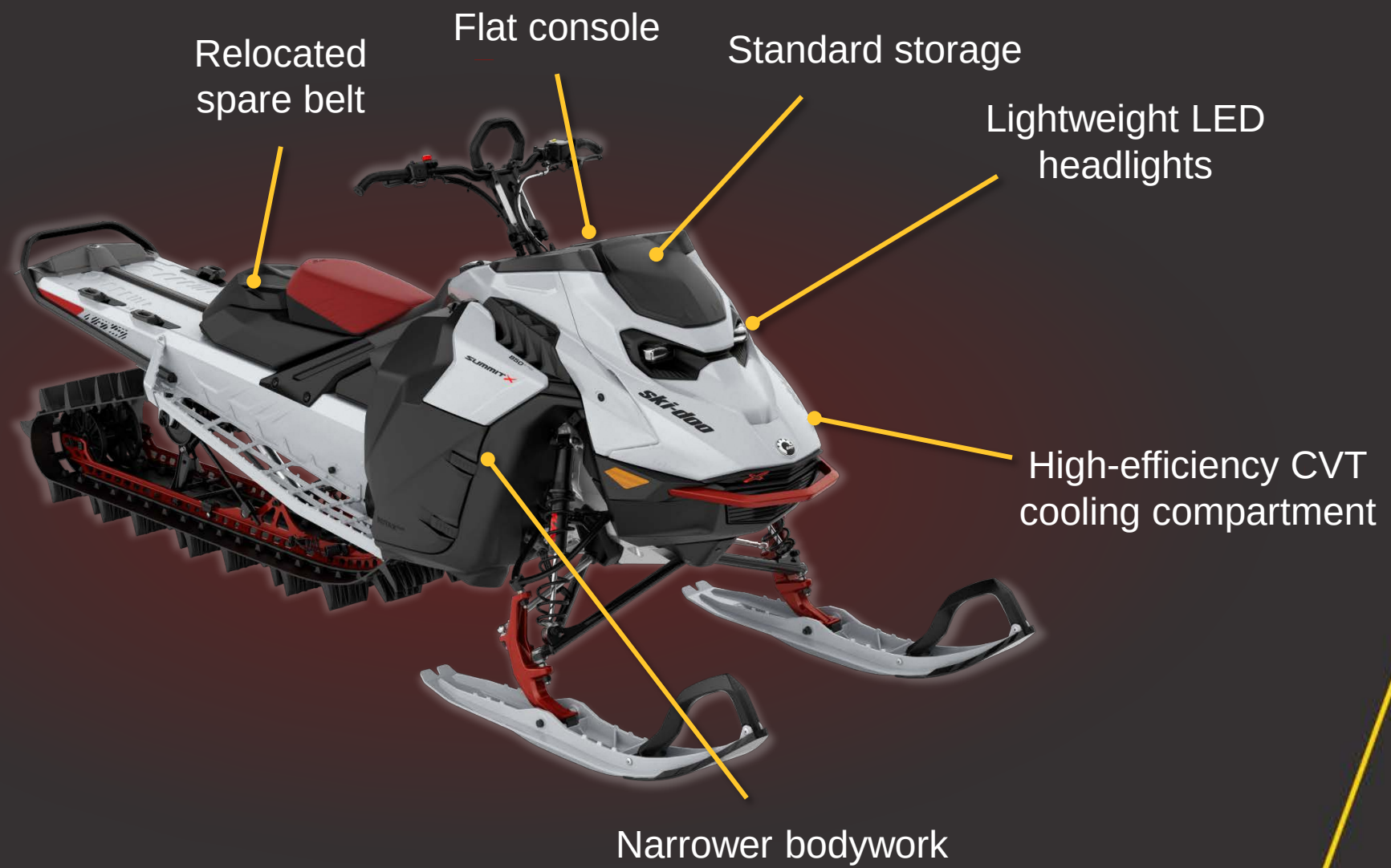

# The new technically sculpted Deep Snow bodywork is slimer than ever !

*Top view*

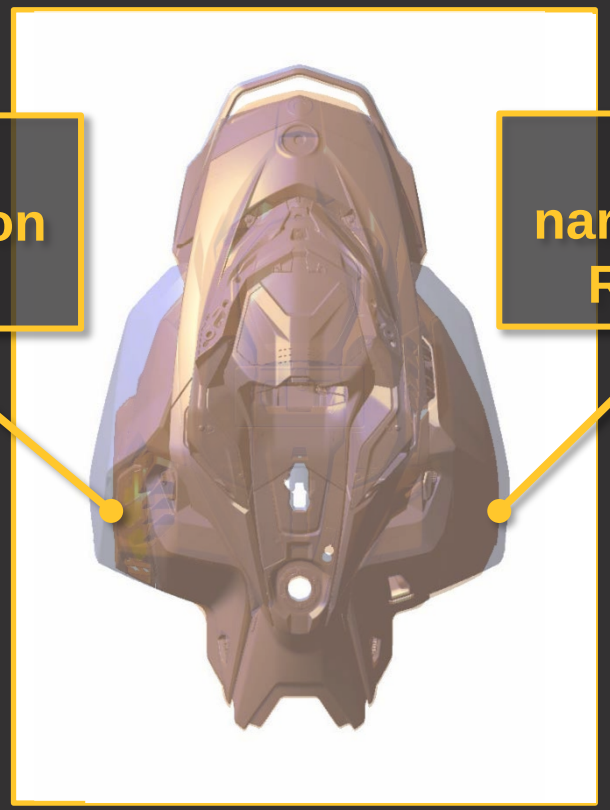


REV Gen4

**REV Gen5**

*Model shown with accessories*

The new compact design allows the rider to see the spindles while riding even with a narrow 34 in. ski-stance



Building confidence in highly technical maneuvers and tight situations

# Redesigned Deep Snow specific console




Ultra-easy to swipe-off the snow, less exposed to branches

# Deep Snow LED headlights strike the perfect balance between practicality and lightweight





- **2.0 lb lighter than REV Gen4**
- **More than 2,400 Lumens***
  **High (1,376) + Low (1,032)**
- **Sport-bike-inspired independent Low (LH) and High (RH+LH) beams**

*On premium deep snow version
Standard deep snow version: 2,064 lumens

# All REV Gen5 get an easy-access glovebox




*Model shown with accessories*

# The first enclosed CVT system in the industry



**Benefits:**

- Much narrower vehicle
- Better CVT cooling system
- Further increased belt life

# The CVT venting system pulls twice as much cold air compared to the engine air intake !

Internal backing plate

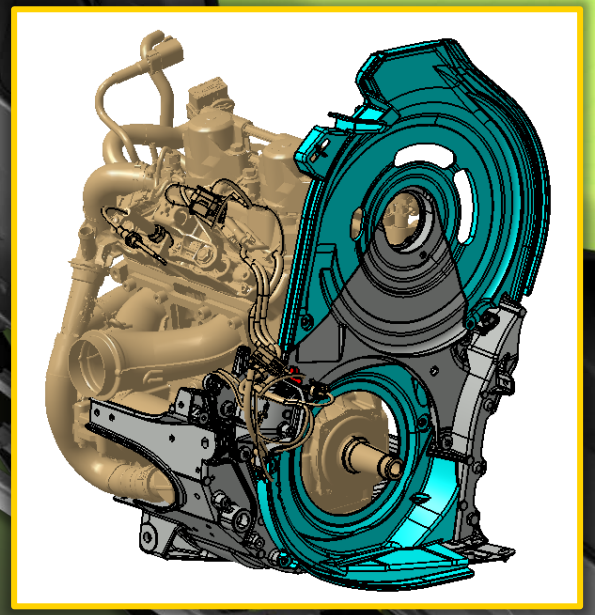

Warm air outlet

Warm air outlet

Cold air inlets w/ snow chicane

# So tight that we relocated the spare belt compartment



# The Deep Snow REV Gen5 is new from front to back!

Lighter tunnel radiator




Narrower running boards

CLUB BRP 2023

# The running boards are 1.5 in. narrower on each side with improved snow evacuation

**REV Gen5**

1.5 in.



1.5 in.

*REV Gen4*



*REV Gen4*

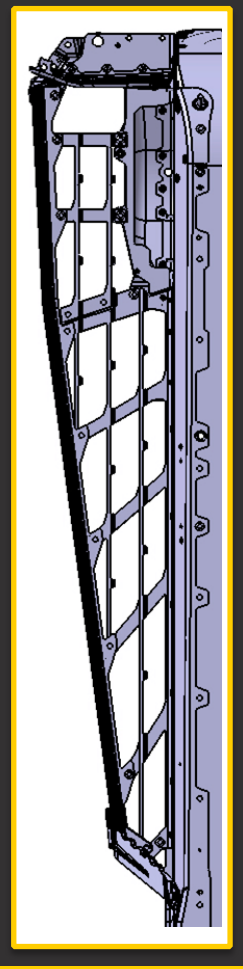

**Open surface: 47.5%**

+11.5%

***REV Gen5***
*X, Expert, Freeride*

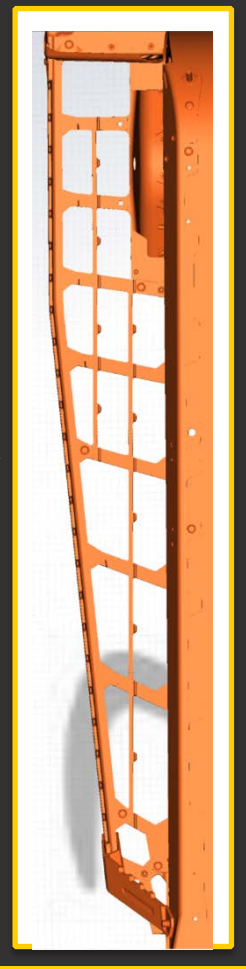

**Open surface: 53%**

*REV Gen4*

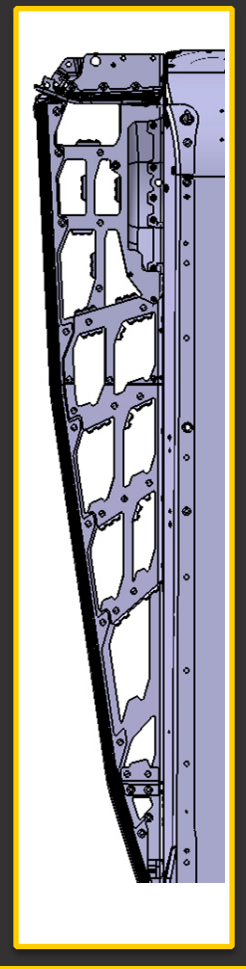

**Open surface: 36%**

+14%

***REV Gen5***
*SP, Edge*

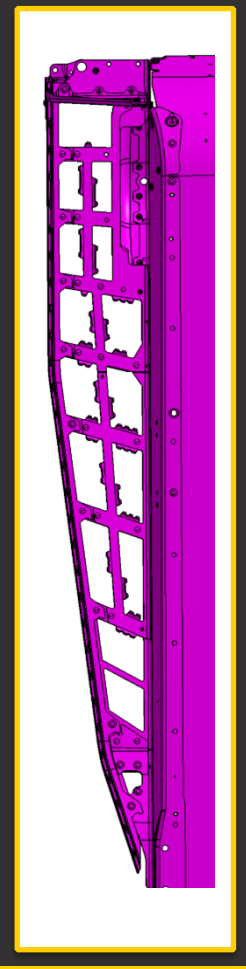

**Open surface: 41%**

# The new Deep Snow specific tunnel radiator is lighter while maintaining peace-of-mind cooling efficiency

*REV Gen4*

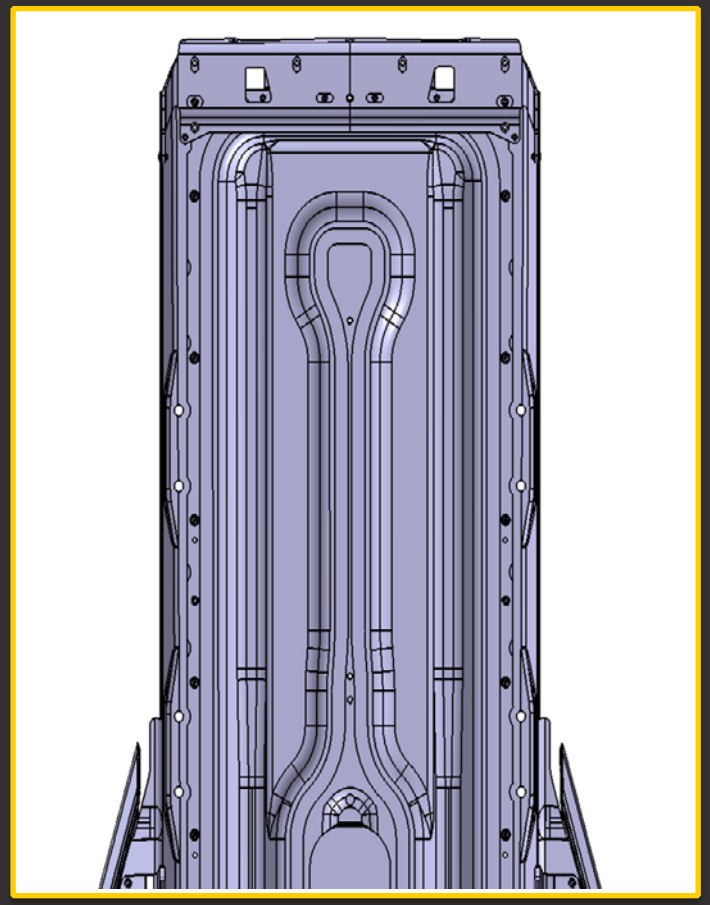

***REV Gen5***

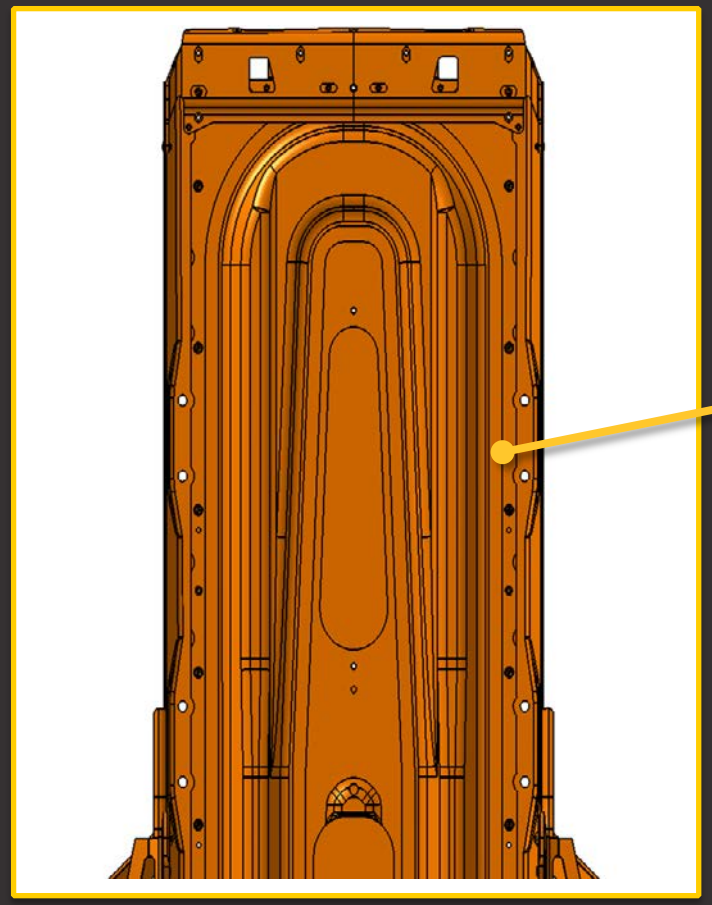

Upper aluminum sheet at 1.8mm instead of 2mm

**Weight saving is close to 1.5 lbs Dry and 3.0 lbs Wet on a 165” short tunnel**

# The new Deep Snow REV Gen5 is new from front to back!

Lighter 3.0 in. track

Completely revised rear suspension

Quick-removal driveshaft
*(also on Trail version)*




CLUB BRP 2023

# The tMotion X with 90% new parts sets new standards

- **New geometry**
  - Longer front arm
  - Rear arm moved back
  - More controlled weight transfer
- **- 3.0 lbs weight saving**
- **Increased capacity**
  - + 25mm more travel




With reduced unsprung weight and increased capacity

# tMotion X: What's changed?

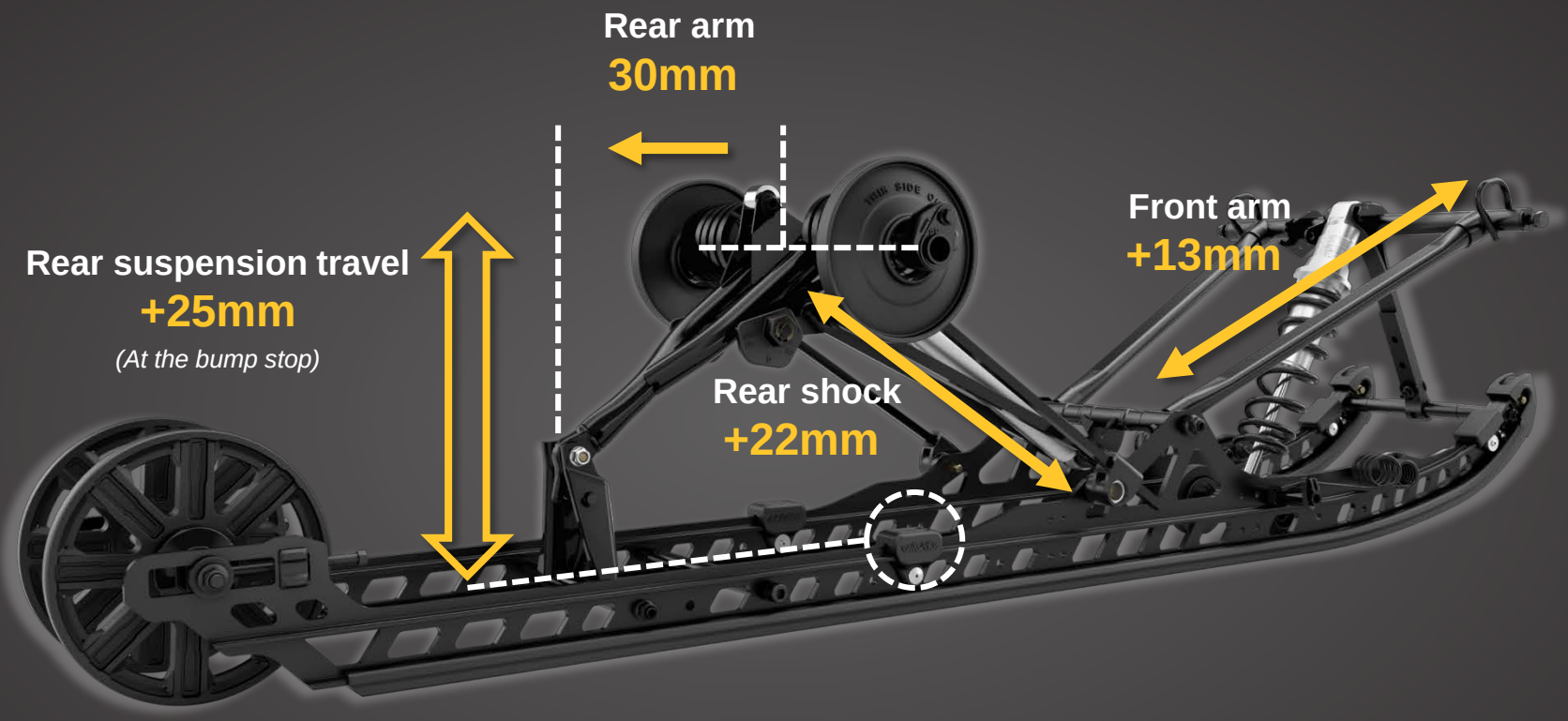

# NEW PowderMax X-Light 3.0 in. with FlexEdge

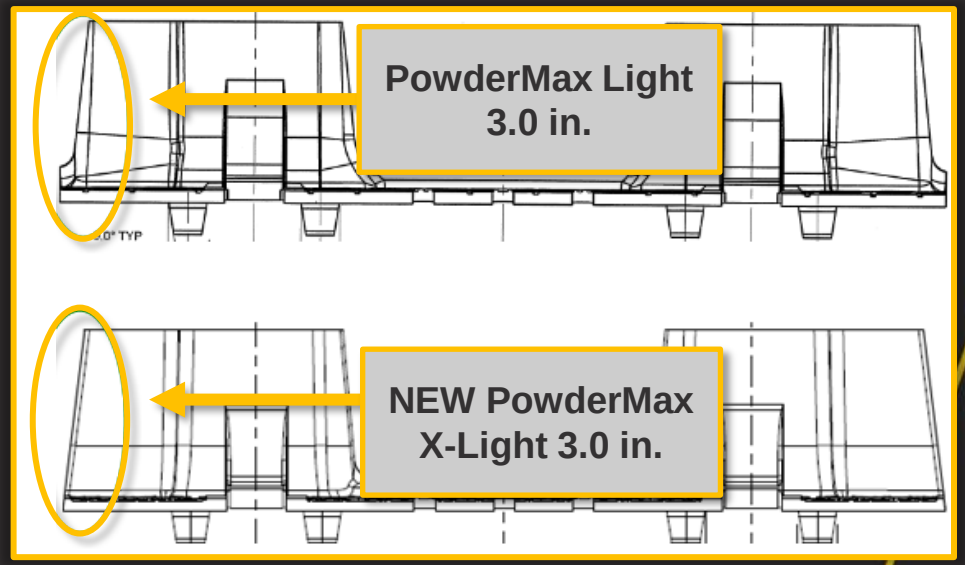


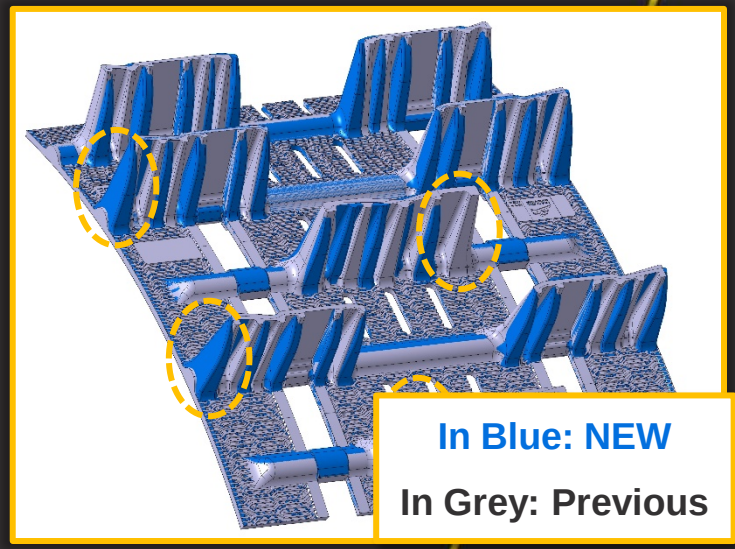


- **Up to 4 lb lighter**
- **Improved traction**
- **More durable**

CLUB 2023

# Quick-removal driveshaft: New sealed bottom gear to separate the wet and dry side

***No longer necessary to open the chaincase to remove the drive axle***

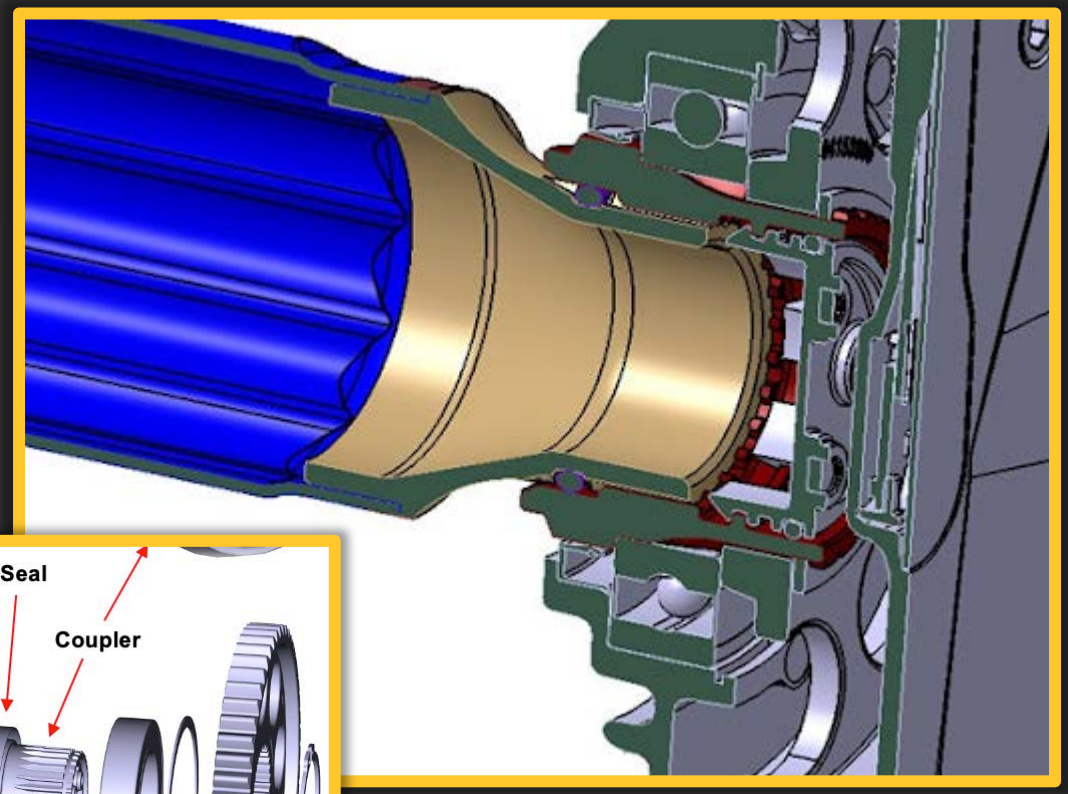

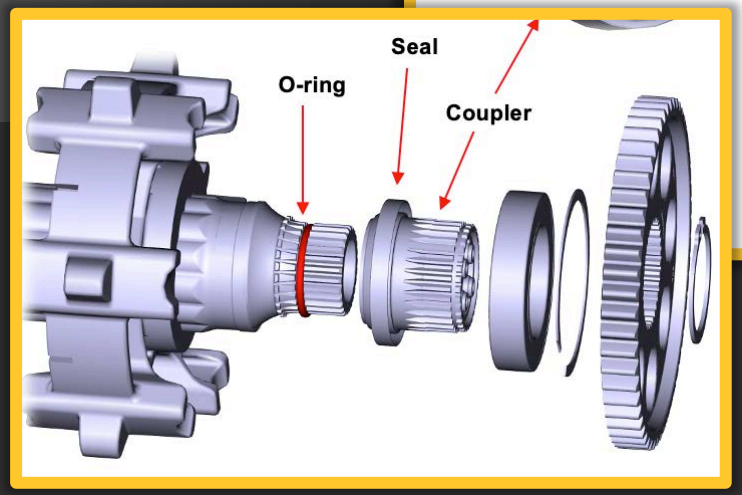


*Also on Trail REV Gen5*

**Track changes are now QUICKER, SIMPLIER and CHEAPER !**

# REV Gen5 is on all Summit and Freeride packages

*In-season* | *Spring-only*



*Summit SP*
*(No 600R E-TEC available)*

*Summit Edge*

*Summit X*

*Summit X w/ Expert Pkg*

*Freeride*

# The Expert Package becomes even more specialized!



**Adjustable brake lever**

**Expert specific** lighter **and predictable**
3.0 in. track

Completely revised rear suspension **with Expert exclusive rear arm**

**Improved adjustable limiter strap**

**Precise Pilot DS4 skis**

CLUB BRP 2023

*In Blue:*
*Differences with other REV Gen5 Deep Snow models*

# NEW tMotion XT designed for the most technical terrain




**Adjustable limiter strap with more range**

- *50 vs 30 mm*
- *PRECISION+ → shorter center*

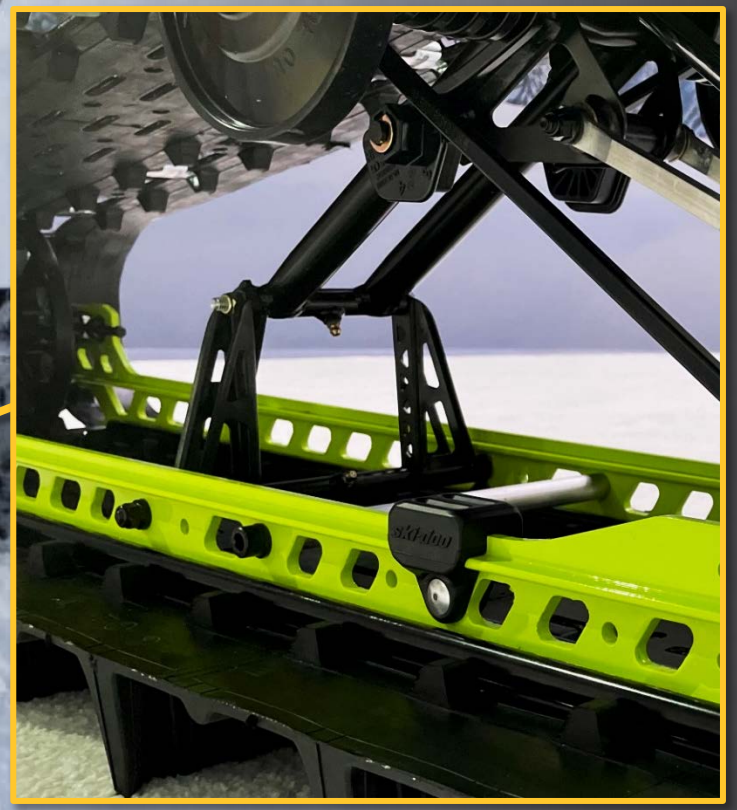

**Fixed rear arm**

- *More precise, stable and predictable*
- *Improved sidehilling performance*

*Model shown with accessories*

# NEW PowderMax X-Light 3.0 in.

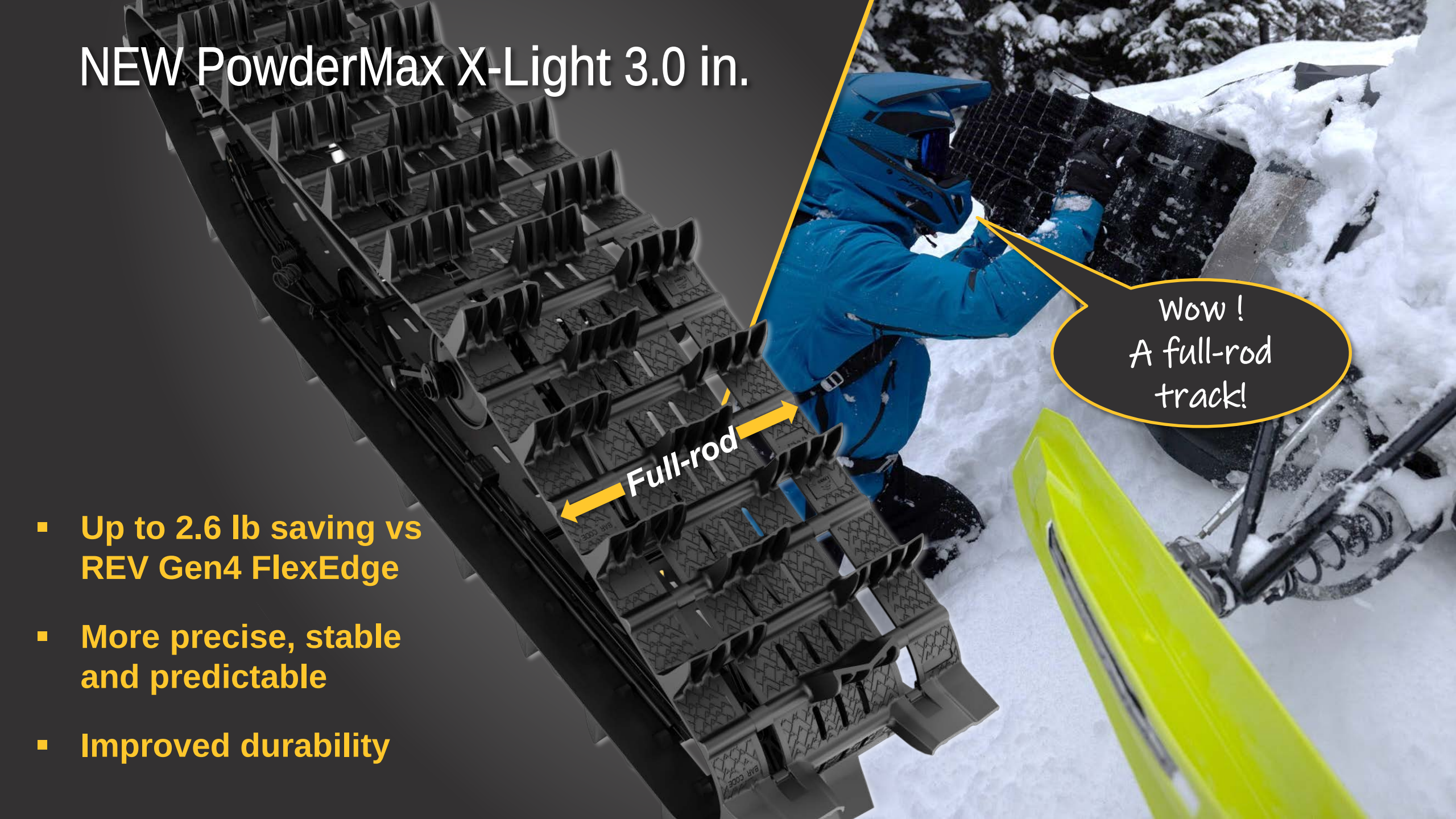


- **Up to 2.6 lb saving vs REV Gen4 FlexEdge**
- **More precise, stable and predictable**
- **Improved durability**

# NEW Pilot DS 4 Skis

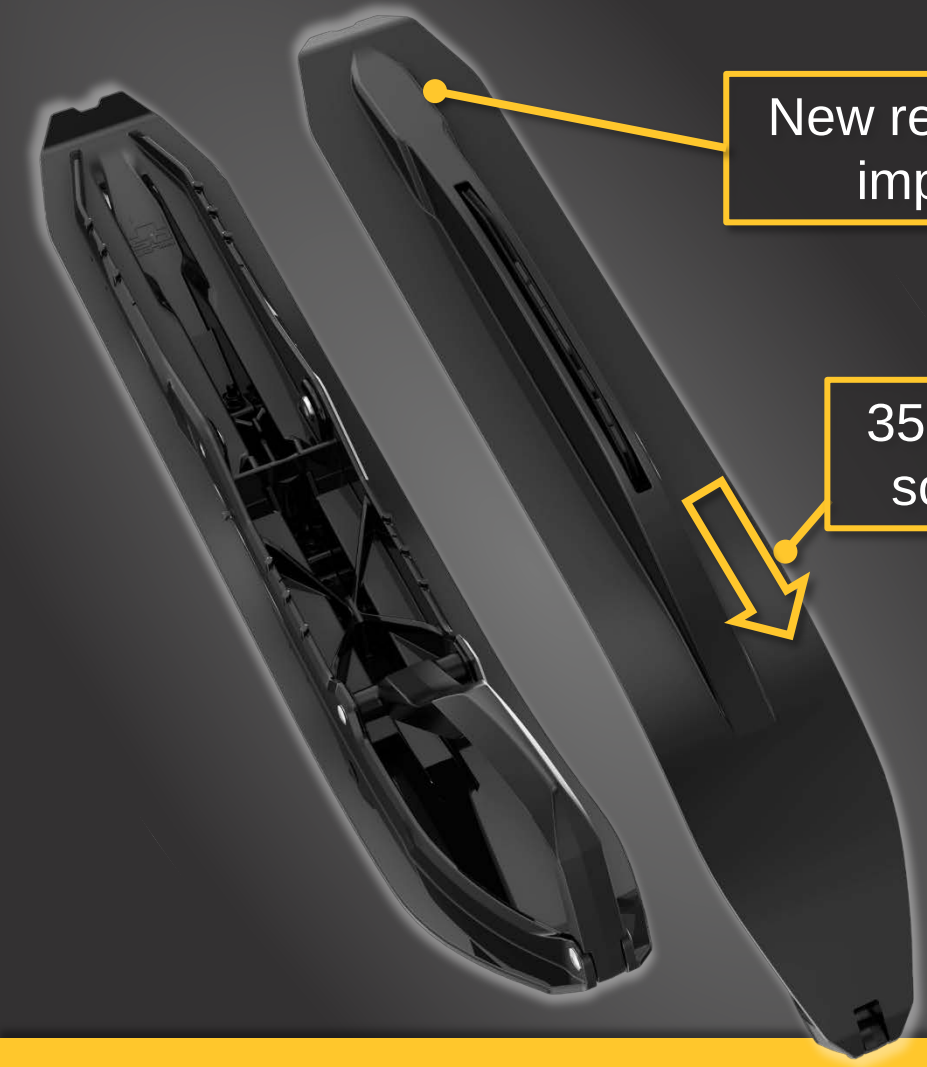

New rear keel design to improve stability

35mm Longer flat sole in the front



More stable in sidehilling, more precision and control in rough conditions

# NEW Adjustable Brake Lever

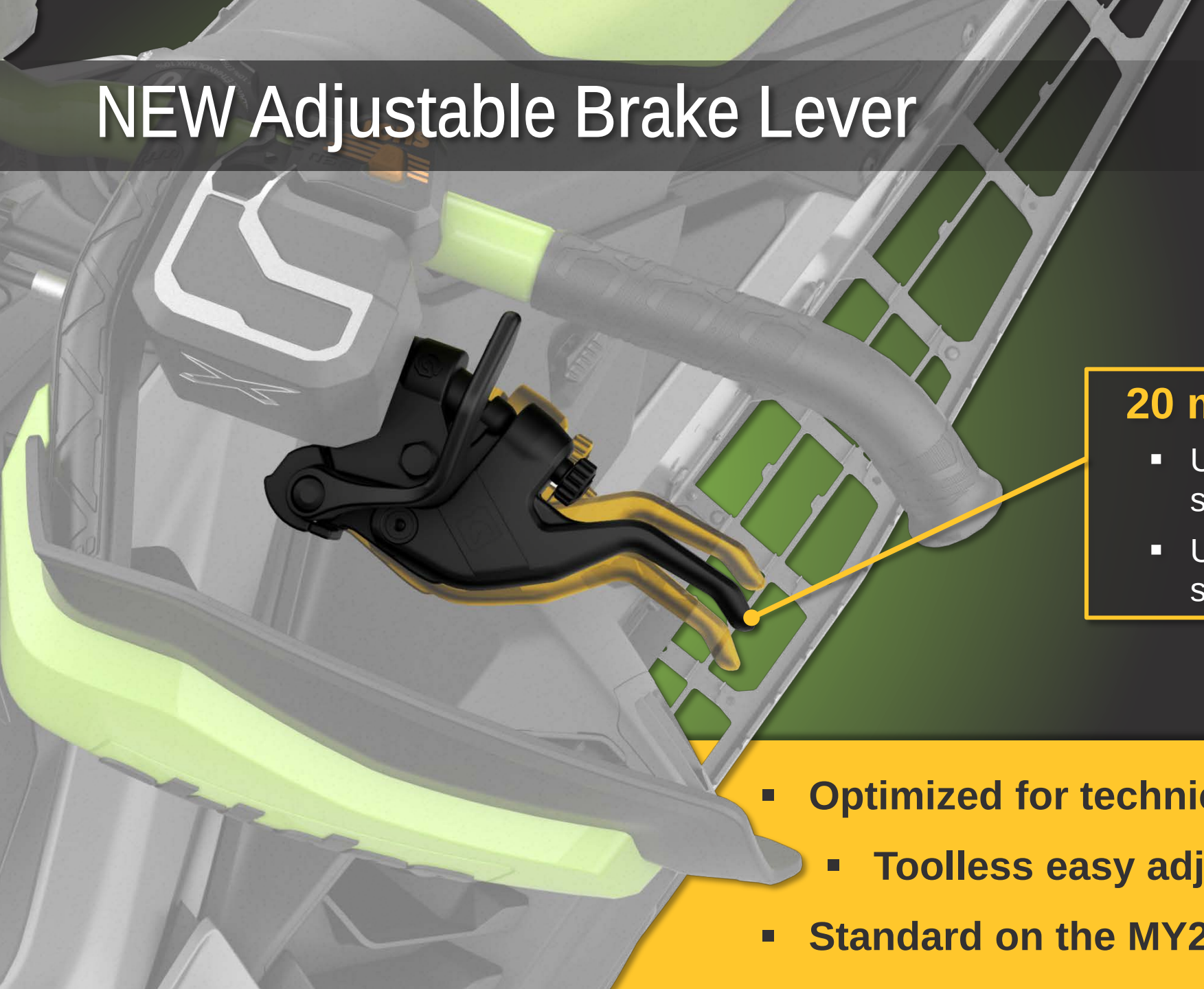

## 20 mm adjustability range

- Up to 15.5mm closer than the standard lever
- Up to 4.5mm farther than the standard lever

- **Optimized for technical riding with 1 or 2 fingers**
- **Toolless easy adjustment**
- **Standard on the MY23 Expert and Freeride**

# Which one is for who?

*In-season* *Spring-only*



## *Summit SP*

*(No 600R E-TEC available)*

**Most affordable Deep Snow option**



## *Summit Edge*

**Well-balanced in-season with premium spring flavor**



## *Summit X*

**Agile, playful and effortless now at 34-in.**



## *Summit X w/ Expert Pkg*

**Stiffer ride and specialized for the most technical riding**



## *Freeride*

**Extreme capacity with a stand out style**

# SKI-DOO : WHAT'S NEW AGENDA

20 years ago, Ski-Doo dropped a bomb

The NEW undisputed champion


The NEW undisputed champion
180 HP
850 E-TEC TURBO R
WITH THE SAME RENOWNED THROTTLE RESPONSE
WITH THE SAME OUTSTANDING REFINEMENT
WITH THE SAME VALUED PEACE OF MIND
WITH MORE POWER
The most powerful factory 2-stroke Turbo in the industry. Period.

# Everyone benefits from the R




## Delivering MORE BOOST and MORE POWER at ALL ALTITUDES!

# 3 complete *Turbo-Winters* with a flawless track record


2020


2021


2022

## 2023: 850 E-TEC Turbo *R* specific changes

- Revised cylinder head: better spark plug cooling
- New injectors
- Reinforced CVT components
- Reinforced chain
- REV Gen5 airbox
- New ECU
- More boost from sea-level to high-altitude
  - Ranges from 1.5 up to 6.5 psi
  - Average of +1.5 to 2 psi over the previous 165hp 850 E-TEC Turbo



*Model shown with accessories*

## Ski-Doo is the undeniable leader in 2-stroke turbo knowledge

# SKI-DOO : WHAT'S NEW AGENDA

20 years ago, Ski-Doo dropped a bomb

The NEW undisputed champion

Next-level connectivity and ride experience

# 10.25” Color Touchscreen Display with BRP Connect

*REV Gen5 spring-model option*




CLOSE TO

**60%**

MORE SCREEN SURFACE

THAN ITS CLOSEST COMPETITOR

Featuring an all-around new design on its larger customizable touchscreen display with improved connectivity functions

- New elegant and premium design
- Intuitive interface
- Enhance connectivity experience



# New elegant and premium design

## A large and redesigned display with an emphasis on readability while riding

### New elegant design




### Optimized integration on REV Gen5

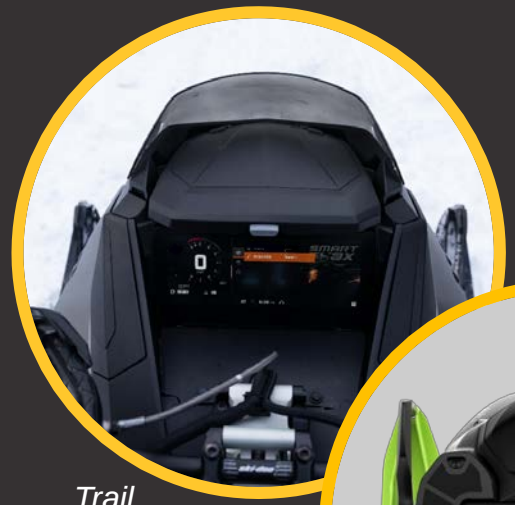

*Trail*




*Deep Snow*

### Larger & better display

10.25”

# Intuitive interface

A simple, predictable and consistent interface that exemplifies “ease of use” with touchscreen and hand control capabilities

## Touchscreen display




*Trail and Deep Snow*

## New handlebar control module

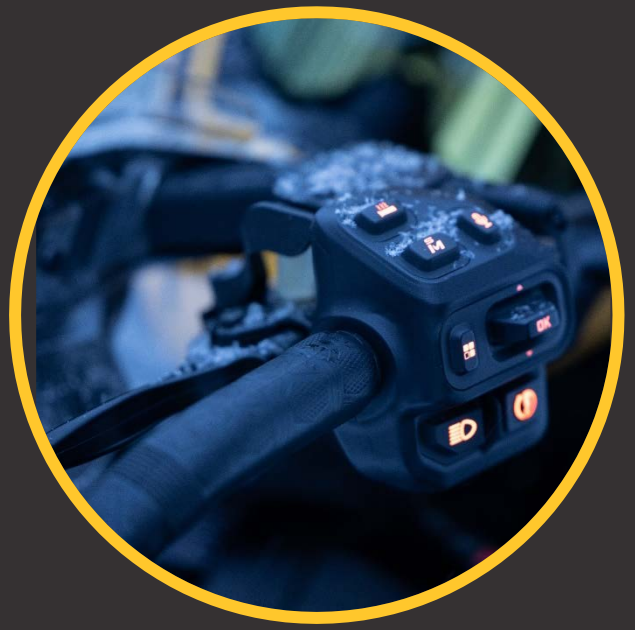

*Trail only*

## Many customizable options

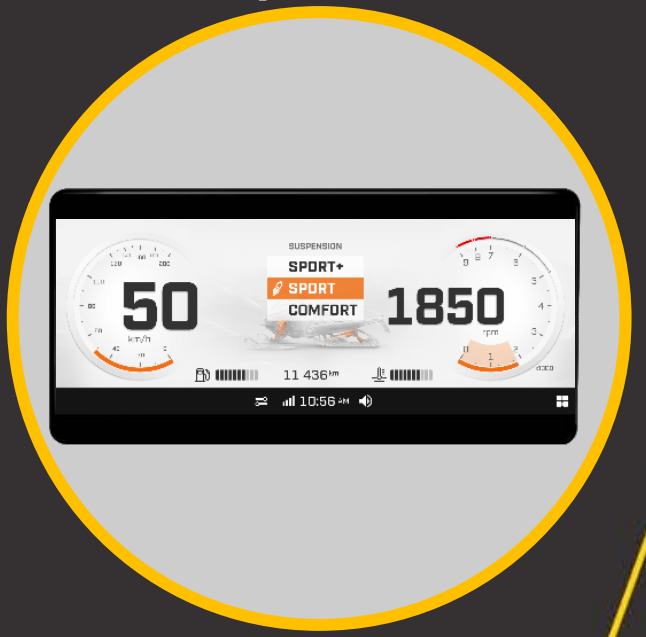

# Enhanced connectivity experience

Simple and intuitive experience that is elevated with BRP connectivity

**GPS navigation with BRP GO!**

**Bluetooth connection is easier than ever**

**OTA updates via Wi-Fi**

# Apps and control overview

## Apps menu




## Gauge *(Dark mode)*




*(Light mode)*




## Vehicle










## Phone




## Media

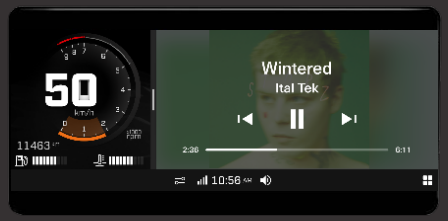


## Navigation

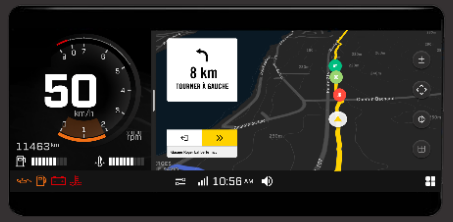


## Drive Stats




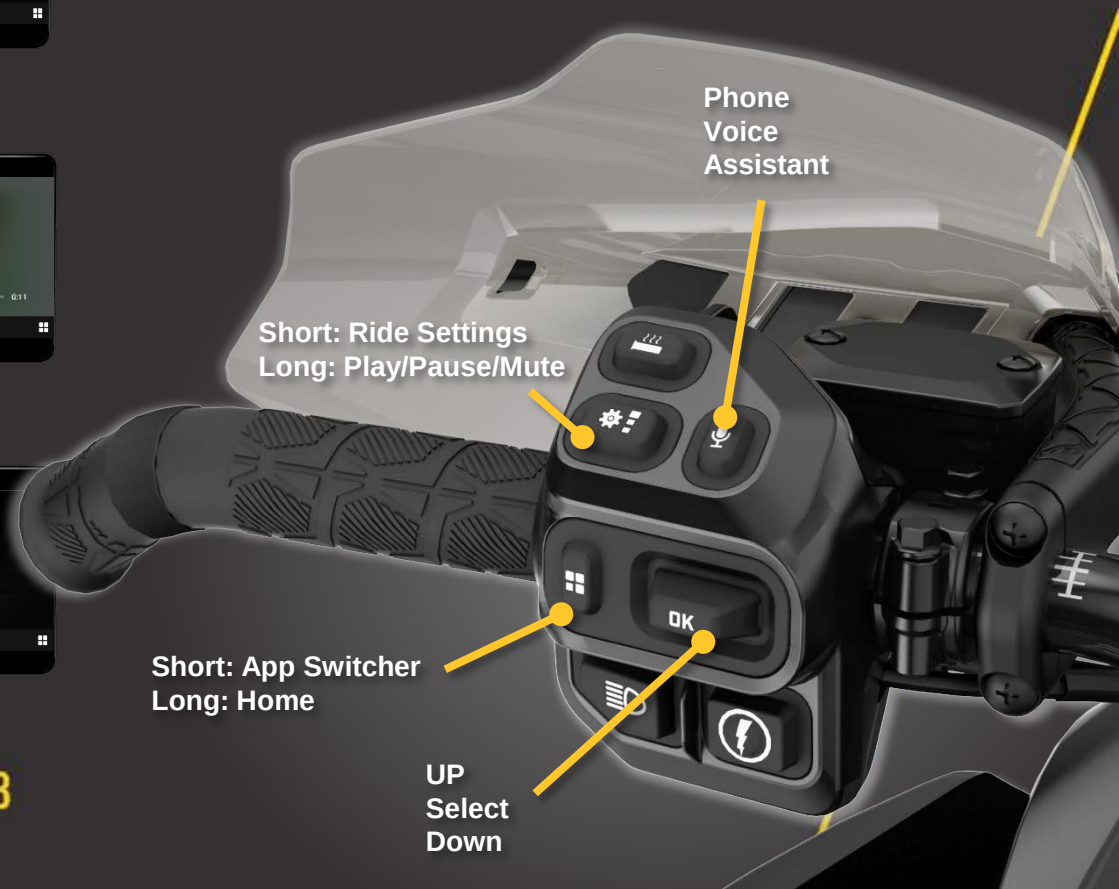


CLUB BRP 2023

# App switcher and Ride settings functions

## App Switcher

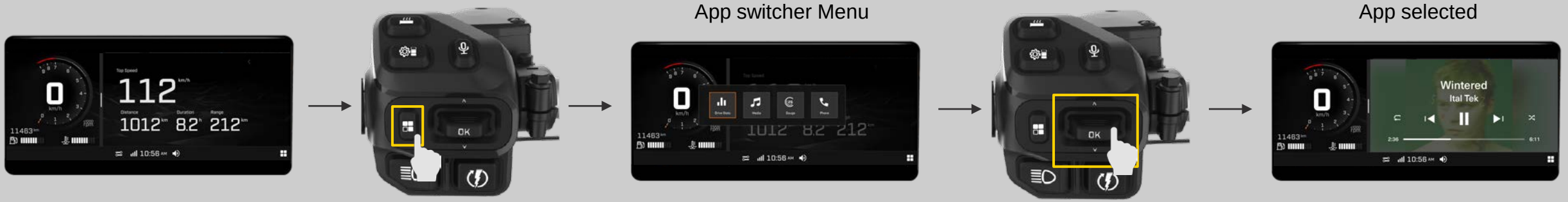


## Ride Settings

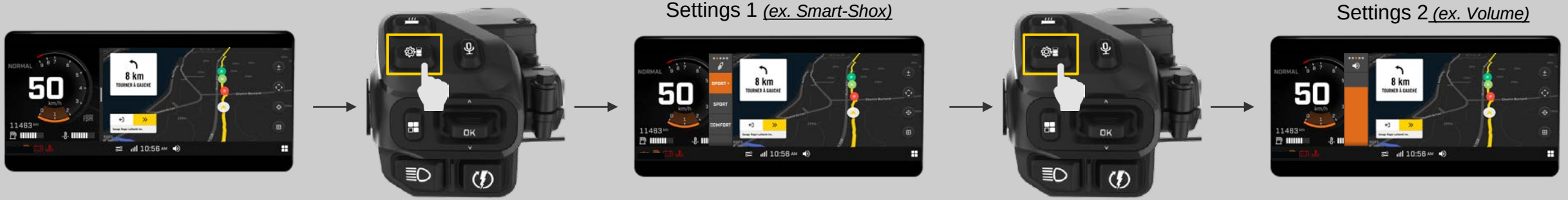

# SKI-DOO : WHAT'S NEW AGENDA

20 years ago, Ski-Doo dropped a bomb

The NEW undisputed champion

Next-level connectivity and rider's experience

A ride for everyone

# MXZ Neo and Summit Neo models: Mid-Sized design to develop rider's skills and confidence level

AFFORDABLE

ATTRACTIVE AND FUN

EASY TO USE




*Models shown with accessories*

While delivering a full-size *Ski-Doo Feeling* !

# Mid-sized sleds at mid-sized prices!

## MXZ NEO




Starting at

**$6,399** USD

$7,999 CAD

## SUMMIT NEO




Starting at

**$6,999** USD

$8,699 CAD

**Excluding freight, PDI and Commodity Surcharge*

# MXZ Neo and Summit Neo specific configuration delivers full-blown fun factor

- Narrower and small diameter handlebar
- Lower handlebar height
- Neo throttle lever

MXZ: Neo compact trail seat
Summit: Deep snow compact seat

ROTAX 600 EFI engine – 40 HP
Electric start standard

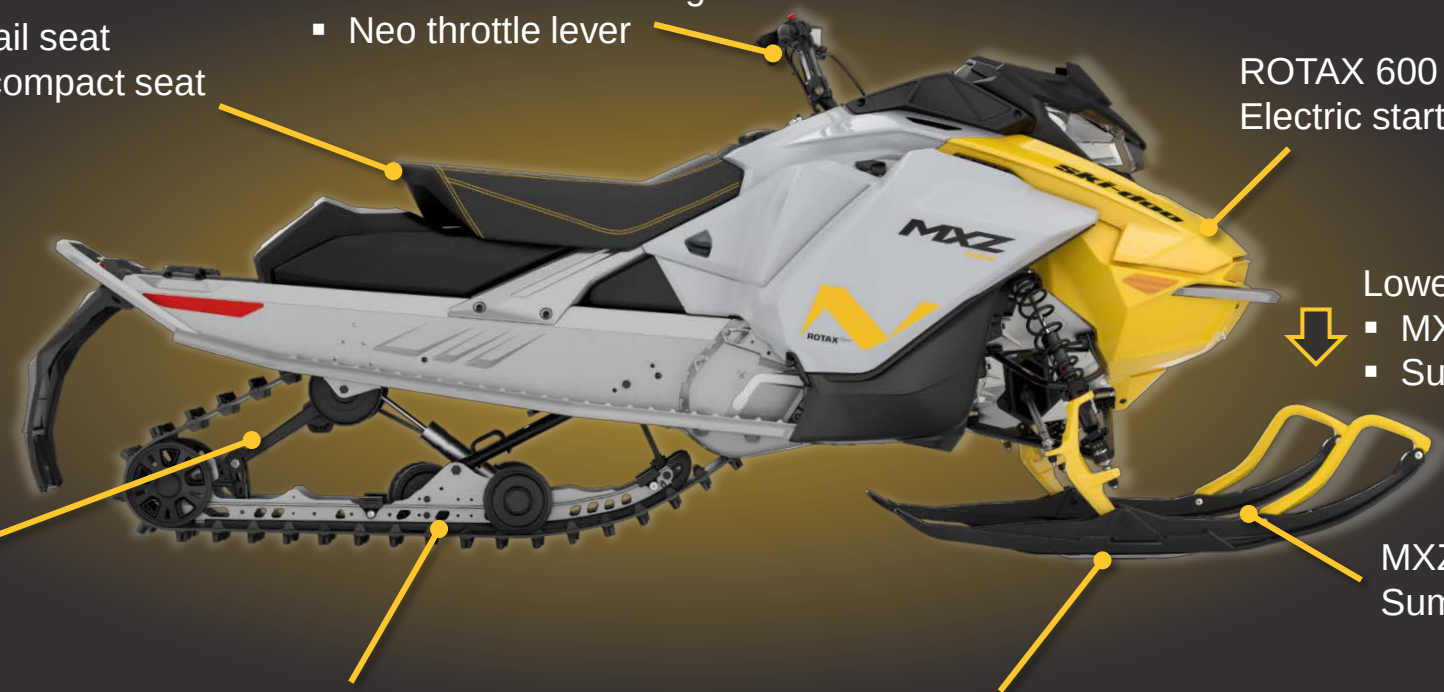


Lower ride height
- MXZ: -45 mm
- Summit: -35 mm

Neo single-shock
rear suspension

MXZ: 39 in. ski-stance
Summit: 34 in. ski-stance

MXZ: 120x14x1.0 in. Cobra
Summit: 146x14x1.6 in. Cobra FlexEdge

MXZ: Pilot 5.7
Summit: Pilot DS2



## Giving a whole new generation of customers access to the sport

# Or get a Neo+ with upgraded features and more performance

For only

**$800** USD **more**

Over the Neo package MSRP

$1,000 CAD

MXZ: **Transparent handguards with handlebar cover**
Summit: **Flexible handguards with mountain grab handle**

**+15 HP**

ROTAX 600 EFI engine – **55 HP**



**Premium coloration** with **painted tunnel**

MXZ: 120x**15x1.25 in. RipSaw**
Summit: 146x**15x1.75 in. Hurricane FlexEdge**

**KYB HPG** front shocks



*In Blue:*
*Features over the standard Neo package*

## Offering amazing consumer value

# Be fast, very limited quantities available !

***MXZ Neo***
*$6,399 USD*
*$7,999 CAD*




***Summit Neo***
*$6,999 USD*
*$8,699 CAD*




***MXZ Neo+***
*$7,199 USD*
*$8,999 CAD*




***Summit Neo+***
*$7,799 USD*
*$9,699 CAD*




CLUB BRP 2023

# MXZ 120 and MXZ 200 models provide a great platform for very young enthusiasts




**MXZ 120**
**$3,699 USD**
**$4,499 CAD**




**MXZ 200**
**$4,999 USD**
**$5,999 CAD**

**Excluding freight, PDI and Commodity Surcharge*

*Models shown with accessories*

## Now there really is a Ski-Doo for everyone in the family!

# Other Lineup Updates



Models shown with accessories

# MY23 Expedition and Skandic lineup: Simplified structure and updated engine offering



## EXPEDITION

| | | | |
|---|---|---|---|
| **SPORT** | **16 in.** | 600 EFI<br>600 ACE | 900 ACE |
| **XTREME** | **20 in.** | 850 E-TEC<br>**NEW – 900 ACE Turbo *R*** | |
| **LE** | **20 in.**<br>**24 in.** | 600R E-TEC<br>900 ACE | **NEW – 900 ACE Turbo**<br>**NEW – 900 ACE Turbo *R*** |
| *Spring-only* | | | |
| **SE** | **20 in.** | **NEW – 850 E-TEC**<br>900 ACE | **NEW – 900 ACE Turbo**<br>**NEW – 900 ACE Turbo *R*** |



## SKANDIC

| | | | |
|---|---|---|---|
| **SPORT** | **20 in.** | 600 EFI | |
| **NEW – LE** | **20 in.**<br>**24 in.*** | 600 EFI<br>600 ACE | 600R E-TEC*<br>900 ACE* |
| *Spring-only* | | | |
| **NEW – SE** | **20 in.**<br>**24 in.*** | 600R E-TEC<br>900 ACE | |

# The new spring-only Skandic SE raises the bar




**Loaded with premium utility features**

# Due to overwhelming demand, the *Launch Mode* is back!

Now available on REV Gen4

**Renegade X and Renegade X-RS**

**900 ACE Turbo *R***

with the 7.8 in. wide LCD color display*



*Selectable spring option

# Complete Lineup Review




*Model shown with accessories*

# TRAIL



# 2023 MXZ Lineup: Spring-Only Models

| SPRING ONLY | X-RS | SPRING ONLY | ~~X~~ |
|---|---|---|---|

850 E-TEC
600R E-TEC

**REV Gen5** (850 E-TEC) **w/ Premium LED**
REV Gen4 (600R E-TEC)

**KYB Pro 40R EA-3 front shocks**
KYB Pro 40 **EA-3** center and rear shocks
**Rails reinforcement**
**90mm riser**
**1.5 in. RipSaw** or 1.5 in. Ice Ripper XT track
~~7.8 in. color display~~ **10.25 in. touchscreen** (850 E-TEC only opt.)
Smart-Shox (850 E-TEC only opt.) with Pilot X **and Pilot TX skis**
~~QAS with Pilot TX~~



Black

Platinum Silver / Spartan Red

CLUB BRP 2023

# 2023 MXZ Lineup: In-Season Models

NEW

| Blizzard | ~~TNT~~ | Sport | Neo / Neo+ |
|---|---|---|---|
| 850 E-TEC<br>600R E-TEC | | 600 EFI | **600 EFI – 40** (Neo)<br>**600 EFI – 55** (Neo+) |
| **REV Gen5** (850 E-TEC) **w/ Premium LED**<br>REV Gen4 (600R E-TEC) | | REV Gen4 | REV Gen4 |
| **KYB Pro 36 EA-3 front shocks**<br>**HPG Plus center shock**<br>**KYB Pro 36 EA-3 rear shock**<br>**Forward steering column**<br>**Rack steering system**<br>**90mm riser**<br>1.25 in. RipSaw or 1.25 in. Ice Ripper XT track<br>**7.2 in. digital display** | | **RAS X front suspension** | **Smaller ergonomics**<br>**Neo rear suspension**<br>**39 in. adjustable ski stance**<br>**120x14x1.0 in. track**<br><br>**Neo+ adds:**<br>**+15 HP**<br>**15x1.25 in. track**<br>**HPG front shocks**<br>**Steering pad**<br>**Premium coloration** |



Neo Yellow

Black



Neo Yellow / Black



Neo Yellow / Black *(Neo+)*

Neo Yellow / Catalyst Grey *(Neo)*

CLUB BRP 2023

# 2023 Renegade Lineup: Spring-Only Models

## SPRING ONLY — X-RS

850 E-TEC

900 ACE Turbo R

**REV Gen5** (850 E-TEC) **w/ Premium LED**
REV Gen4 (900 ACE Turbo R)

KYB Pro 36 **EA-3** front shocks
KYB Pro 40 **EA-3** center and rear shocks
**10.25 in. touchscreen** (850 E-TEC only opt.)
**Launch Mode** with 7.8 in. color display
(900 ACE Turbo R only opt.)
Smart-Shox with Pilot X **and Pilot TX skis**
~~QAS with Pilot TX~~



Platinum Silver / Spartan Red

Black

## SPRING ONLY — X-RS w/ Competition Pkg

600R E-TEC

REV Gen4



Black

## SPRING ONLY — X

850 E-TEC
600R E-TEC
900 ACE Turbo R

**REV Gen5** (850 E-TEC) **w/ Premium LED**
REV Gen4 (600R E-TEC / 900 ACE Turbo R)

**10.25 in. touchscreen** (850 E-TEC only opt.)
**Launch Mode** with 7.8 in. color display
(900 ACE Turbo R only opt.)
~~QAS with Pilot TX~~



Neo Yellow

Black

CLUB BRP 2023

# 2023 Renegade Lineup: In-Season Models

| Enduro | Adrenaline | Sport |
|---|---|---|
| 850 E-TEC<br>600R E-TEC<br>900 ACE Turbo R<br>900 ACE Turbo<br>900 ACE | 850 E-TEC<br>600R E-TEC<br>900 ACE Turbo R<br>900 ACE Turbo<br>900 ACE | 600 EFI<br>600 ACE |
| REV Gen4 | **REV Gen5** (850 E-TEC) **w/ Standard LED**<br>REV Gen4 (All others) | REV Gen4<br>**RAS X front suspension** |










CLUB BRP 2023

# 2023 Grand Touring Lineup

## Limited

900 ACE Turbo R
900 ACE Turbo
900 ACE

REV Gen4

Luxury package available

- Premium coloration
- 7.8 in. color display
- Studded track



Platinum Silver /
Spartan Red
*(Luxury package only)*

Black *(standard)*

## Sport

900 ACE
600 ACE

REV Gen4

**RAS X front suspension**



Neo Yellow / Black

CLUB 2023

# CROSSOVER



*Model shown with accessories*

# 2023 Backcountry Lineup: Spring-Only Models

**SPRING ONLY** X-RS

850 E-TEC

REV Gen4

39 in. **RAS X** (spindle) adjustable front suspension



Black

Platinum Silver / Manta Green

**SPRING ONLY** X

850 E-TEC

REV Gen4

39 in. **RAS X** (spindle) adjustable front suspension



Black

Catalyst Grey / Spartan Red

CLUB 2023

# 2023 Backcountry Lineup: In-Season Models

| Backcountry | Sport |
| --- | --- |
| 850 E-TEC<br>600R E-TEC | 600 EFI |
| REV Gen4 | REV Gen4 |
| 39 in. **RAS X** (spindle) adjustable front suspension | 39 in. **RAS X** (spindle) adjustable front suspension |
| **Black HPG front shocks** | |
| 15 x 146 x 1.6 Cobra | |
| **16 x 146 x 2.0 PowderMax opt.** | |



Black

Catalyst Grey / Neo Yellow



Neo Yellow / Black

CLUB BRP 2023

# 2023 Expedition Lineup

| SPRING ONLY | SE | LE | ~~SWT~~ |
|---|---|---|---|
| | **850 E-TEC**<br>~~600R E-TEC~~<br>**900 ACE Turbo *R***<br>**900 ACE Turbo**<br>900 ACE | 600R E-TEC<br>**900 ACE Turbo *R***<br>**900 ACE Turbo**<br>900 ACE | |
| | REV Gen4 | REV Gen4 | |
| | 39 in. **RAS X** (spindle) adjustable front suspension<br>**Black** HPG front shocks | 39 in. **RAS X** (spindle) adjustable front suspension<br>**Black** HPG front shocks<br>20- and **24-in.** wide track options | |



Black

Catalyst Grey / Orange Crush



Black

Arctic Desert / Black

CLUB BRP 2023

# 2023 Expedition Lineup

## Xtreme

850 E-TEC
**900 ACE Turbo *R***

REV Gen4

39 in. **RAS X** (spindle) adjustable front suspension



Black / Spartan Red

## Sport

900 ACE
600 ACE
600 EFI

REV Gen4

39 in. **RAS X** (spindle) adjustable front suspension



Neo Yellow / Black

CLUB BRP 2023

# DEEP SNOW



# 2023 Summit Lineup: Spring-Only Models

**SPRING ONLY**

## X w/ Expert Package

850 E-TEC
**850 E-TEC Turbo *R***

**REV Gen5 w/ Premium LED**

**tMotion XT**
**PowderMax X-Light 3.0 in.** (full-width rods) / ~~2.5 in.~~
**10.25 in. touchscreen** (opt.)
**Adjustable brake lever**
**Pilot DS4 skis**
Adjustable limiter strap **with more range**
KYB Pro 36 **EA-3** rear shock



Platinum Silver / Manta Green *(Painted)*

Timeless Black *(Painted)*

**SPRING ONLY**

## X

850 E-TEC
**850 E-TEC Turbo *R***

**REV Gen5 w/ Premium LED**

**tMotion X**
**PowderMax X-Light with FlexEdge 3.0 in.** (opt.)
**10.25 in. touchscreen** (opt.)
**34 in. ski stance**



Catalyst Grey / Spartan Red

Timeless Black *(Painted)*

CLUB BRP 2023

# 2023 Summit Lineup: In-Season Models

## Edge

850 E-TEC

**REV Gen5 w/ Premium LED**

**tMotion X**
**PowderMax X-Light with**
**FlexEdge 3.0 in.** (opt.)
**Black** HPG front shocks



Catalyst Grey / Neo Yellow

Timeless Black *(Painted)*

## SP

850 E-TEC
~~600R E-TEC~~

**REV Gen5 w/ Standard LED**

**tMotion X**
**PowderMax X-Light with**
**FlexEdge 3.0 in.** (opt.)
**Black** HPG front shocks



Catalyst Grey / Neo Yellow

Timeless Black *(Painted)*

CLUB BRP 2023

## Neo / Neo+

**600 EFI – 40** (Neo)
**600 EFI – 55** (Neo+)

REV Gen4

**Smaller ergonomics**
**Neo rear suspension**
**34 in. adjustable ski stance**
**146x14x1.6 in. track**

**Neo+ adds:**
**+15 HP**
**15x1.75 in. track**
**HPG front shocks**
**Handlebar grab strap**
**Premium coloration**



Neo Yellow / Black *(Neo+)*

Neo Yellow / Catalyst Grey *(Neo)*

# 2023 Freeride Lineup

**SPRING ONLY**

## Freeride

850 E-TEC

**850 E-TEC Turbo *R***

**REV Gen5 w/ Premium LED**

**tMotion X**

**PowderMax X-Light with FlexEdge 3.0 in.**

**10.25 in. touchscreen** (opt.)

**Adjustable brake lever**

KYB Pro 36~~R~~ **EA-3** front shocks

KYB Pro 40 **EA-3** center and rear shocks



Timeless Black / Spartan Red *(Painted)*

CLUB 2023

# SPORT-UTILITY




*Model shown with accessories*

# 2023 Skandic Lineup: In-Season Models

SPRING ONLY

## NEW SE

600R E-TEC
900 ACE

REV Gen4

**Three (3) 20-in. wide track options**
**Two (2) 24-in. wide track options**
**135L utility cargo box**
**7.2 in. digital display**
**Heated visor plug**
**9.8 in. ski liners**
**HPG center shock**



Black

Catalyst Grey / Orange Crush

## NEW LE

600R E-TEC
600 EFI
900 ACE
600 ACE

REV Gen4

20 or **24-in.** (600R E-TEC and 900 ACE only) wide track options



Black

Arctic Desert / Black

## Sport

600 EFI

REV Gen4



Neo Yellow / Black

CLUB BRP 2023

# 2023 Tundra Lineup

| LT | Sport |
| --- | --- |
| 600 EFI<br>600 ACE | 600 EFI<br>600 ACE |
| REV Gen4 | REV Gen4 |
| **Black painted tunnel** | |



Black



Neo Yellow / Black

CLUB BRP 2023

# YOUTH




*Model shown with accessories*

# 2023 Youth Lineup

| MXZ 120 | MXZ 200 |
| --- | --- |
| 123cc | 192cc |
| Manual start | Electric start |







CLUB BRP 2023

# SKI-DOO : WHAT'S NEW RECAP

The REV Gen5 platform, tailored specifically for
Deep Snow and Trail applications

New Rotax 850 E-TEC Turbo R:
The most powerful factory-built 2-stroke turbo in the industry

New 10.25" Color Touchscreen Display delivers
next-level connectivity and ride experience

MXZ and Summit Neo models along with MXZ 120 and 200
provide a ride for everyone



# PRODUCT SPEC BOOK

VEHICLES • ACCESSORIES • PARTS • MAINTENANCE
APPAREL • PLAY AND LICENSING PRODUCTS

2023

# PRODUCT SPEC BOOK
2023

## VEHICLE SPECIFICATIONS


**5** Rotax Engines
**6** Summit X with Expert Package
**8** Summit X
**10** Summit Edge
**12** Summit SP
**14** Summit Neo
**16** Freeride
**18** Backcountry X-RS
**20** Backcountry X
**22** Backcountry
**24** Backcountry Sport
**26** Renegade X-RS with Competition Package
**28** Renegade X-RS
**30** Renegade X
**32** Renegade Enduro
**34** Renegade Adrenaline
**36** Renegade Sport
**38** MXZ X-RS
**40** MXZ Blizzard
**42** MXZ Sport
**44** MXZ Neo
**46** MXZ 120/200
**48** Grand Touring Limited
**50** Grand Touring Sport
**52** Expedition Xtreme
**54** Expedition SE
**56** Expedition LE
**58** Expedition Sport
**60** Tundra LT
**62** Tundra Sport
**64** Skandic SE
**66** Skandic LE
**68** Skandic Sport
**70** Comparative Chart


## ACCESSORIES


**77** Platform/Accessory Fit Guide
**78** LinQ Accessories
**82** Fuel & Oil Caddies
**82** Storage
**93** Sleigh, Racks & Holders
**96** Seats & Backrests
**100** Windshields & Wind Protection
**107** Handguards & Handlebar
**109** Mirrors
**110** Adjustable Risers & Extension Kits
**113** LED Lights
**114** Bumpers, Hitches & Winches
**122** Protection & Reinforcement
**126** Toe-Holds, Footrests & Knee Pads
**128** Suspension & Fox Shock Kits
**130** Vent Kits & Prefilters
**132** Cooling & Lubrication
**133** Electrical & Electronics
**137** Trailering & Covers
**140** Garage & Truck Sled Decks


## PARTS


**143** Traction & Control
**154** Propulsion
**156** Electrical


## MAINTENANCE


**159** Oils & Maintenance Products
**162** Care Products


## APPAREL


**165** Sizing chart
**166** TECHNOLOGY GUIDE
**178** Helmets
**180** Goggles
**181** Riding Gear Deep Snow
**185** Riding Gear Trail
**193** Riding Gear Utility
**194** Boots and Socks
**195** TekVests
**195** Bags
**196** Base layers
**197** Sportswear Performance
**199** Sportswear Premium
**202** Sportswear Signature
**205** Headwear
**207** Kids and Teens
**210** Play and Licensing products


THAT ski-doo FEELING


For advertising purposes, some scenes depicted in this brochure include professional riders and racers executing maneuvers or performances under ideal and/or controlled conditions. Do not attempt any of these or any other risky maneuvers if they're beyond your level of riding ability, as well as your understanding and respect for the performance of your snowmobile. Always ride responsibly and safely. Always observe applicable local laws and regulations. Always wear the appropriate protective clothing, including a helmet. And remember, if you're going to drink, please don't ride. Because of its ongoing commitment to product quality and innovation, Bombardier Recreational Products Inc. (BRP) reserves the right, at any time, to discontinue or change specifications, prices, designs, features, models or equipment without incurring any obligation. Some models depicted herein may include optional equipment. Prices are based on Manufacturer Suggested Retail Prices. Dealer may sell for a different price. Taxes are not included. BRP is a proud member of the SSCC (Snowmobiling Safety Certification Committee), Machine Safety Standard, Operator Safety Training, Safe Trails, ISMA (International Snowmobile Manufacturers Association), National Snowmobile Foundation and Tread Lightly! Inc. By being a member of these important snowmobiling associations, we recognize and support their efforts in sharing the responsibility in promoting the growth of our sport. Isolfil is a registered trademark of Yarns and Threads For Textile. mcFIT is registered trademark of MCTECH Corporation. PrimaLoft Gold, PrimaLoft Silver and PrimaLoft Black are registered trademarks of Albany International Corp. Sympatex is a registered trademark of Sympatex Technologies GmbH. Dri-Lex is a registered trademark of Faytex Corp. Vespel, Teflon HT and Kevlar are trademarks of E.I. DuPont de Nemours & Co. Thermolite and Cordura are registered trademarks of INVISTA for durable fabrics. Thermocool is a registered trademark of ADVANSA. Velcro is a registered trademark of Velcro Industries. Scott is a trademark of Scott Sports SA. M-FORGE® Composite is a patented and registered trademark of MAT GROUP™ TekVest is a registered trademark of Tekrider. Fidlock is a registered trademark of Fidlock GmbH. clim8® is a trademark of clim8 SAS and is registered in the US and other countries. Terra is a trademark of Superwinch LLC. Bluetooth is a registered trademark of Bluetooth SIG, Inc. Warn is a registered trademark of Warn Industries Inc. GTX is a trademark of Castrol Limited used under license. Montana and Zumo are registered trademarks of Garmin Ltd. NGK is a registered trademark of NGK Spark Plugs, Ltd. Extender Trail III, Trail Blazer IV, Executive, Flat-top and Dooly are trademarks and registered trademarks of Woody's International Engineering and Manufacturing, Inc. RipSaw, RipSaw Lite, ICE Ripper, ICE Ripper XT, ICE Attak and Powder Max are trademarks of Camoplast Inc. Lexan is a registered trademark of SABIC Innovative Plastics. Superclamp II is a trademark of Bowdriks Industries. FOX is a registered trademark of Fox Racing Canada, Kolpin and Impact are registered trademarksof Kolpin Powersports Inc. Yuasa is a registered trademark of YUASA Batteries Inc. Schumacher® and the Schumacher logo are registered trademarks of Schumacher Electric Corporation. Depending onlocation, products are distributed by BRP US Inc., Bombardier Recreational Products Inc., BRP European Distribution SA, BRP Finland Oy., BRP Australia Pty Ltd. or Bombardier Recreational, Products Motores da Amazonia Ltda. In the U.S.A., products are distributed by BRP US Inc. In Canada, products are distributed by Bombardier Recreational Products Inc. ®/TM and the BRP logo are trademarks and registered of Bombardier Recreational Products Inc. or its affiliates. All other company and/or product names are trademarks or registered trademarks of their respective holders. © 2022 BRP. All rights reserved. Printed in Canada.


// SKI-DOO.COM



# VEHICLE SPECIFICATIONS

// VEHICLE SPECIFICATIONS


| | |
|---|---|
| 5 | ROTAX ENGINES |
| 6 | SUMMIT X WITH EXPERT PACKAGE |
| 8 | SUMMIT X |
| 10 | SUMMIT EDGE |
| 12 | SUMMIT SP |
| 14 | SUMMIT NEO |
| 16 | FREERIDE |
| 18 | BACKCOUNTRY X-RS |
| 20 | BACKCOUNTRY X |
| 22 | BACKCOUNTRY |
| 24 | BACKCOUNTRY SPORT |
| 26 | RENEGADE X-RS WITH COMPETITION PACKAGE |
| 28 | RENEGADE X-RS |
| 30 | RENEGADE X |
| 32 | RENEGADE ENDURO |
| 34 | RENEGADE ADRENALINE |
| 36 | RENEGADE SPORT |
| 38 | MXZ X-RS |
| 40 | MXZ BLIZZARD |
| 42 | MXZ SPORT |
| 44 | MXZ NEO |
| 46 | MXZ 120/200 |
| 48 | GRAND TOURING LIMITED |
| 50 | GRAND TOURING SPORT |
| 52 | EXPEDITION XTREME |
| 54 | EXPEDITION SE |
| 56 | EXPEDITION LE |
| 58 | EXPEDITION SPORT |
| 60 | TUNDRA LT |
| 62 | TUNDRA SPORT |
| 64 | SKANDIC SE |
| 66 | SKANDIC LE |
| 68 | SKANDIC SPORT |
| 70 | COMPARATIVE CHART |




# ROTAX® ENGINES



**ROTAX 2-STROKE ENGINES**
Heart-thumping power, lightweight design, proven reliability – E-TEC direct-injection engine technology delivers the most sought-after attributes in the snowmobile industry.

Our lineup of 2-stroke engines now includes the brand-new 600 EFI (Electronic Fuel Injection) engine. Reliable, affordable and easy to use, it's an entry-level engine that far exceeds what you thought an entry-level engine had to be.

With the E-TEC engine lineup you also get:
- Industry-leading fuel economy[2]
- Excellent oil economy
- Virtually no smoke or smell
- Light, linear throttle pull
- Automatic summerization process

**NEW 850 E-TEC TURBO R**
- 180 hp up to 8,000 ft[1]
- World's most powerful factory-built 2-stroke turbo

**850 E-TEC**
- 165 horsepower[1]
- Up to 19 mpg (12.3 L/100 km)[2]

**600R E-TEC**
- 125 horsepower[1]
- Up to 21 mpg (11.3 L/100 km)[2]

**600 EFI**
- 85 horsepower[1]
- Up to 18 mpg (13.3 L/100 km)[2]

E-TEC engines are the best-selling 2-stroke engines in snowmobiling.[4]

**ROTAX ACE™ 4-STROKE ENGINES**
With the Advanced Combustion Efficiency (ACE) family of engines, BRP engineers optimized the combustion system, reduced mechanical friction, and freed intake and exhaust breathing. The result is the most efficient engine in snowmobiling. Not only are they efficient, they're a pleasure to operate and own. Very little maintenance is required; they run smoothly and produce a nice, solid – yet quiet – sound.

**900 ACE TURBO R**
- Rotax-designed turbocharger
- 180 horsepower[1]
- Cable-activated throttle with reconfigured iTC

**900 ACE TURBO - 150 WITH iTC**
- 150 horsepower[1]
- Up to 19.4 mpg (12.1 L/100 km)[3]

**900 ACE TURBO - 130 WITH iTC**
- Rotax-designed turbocharger
- 130 horsepower[1]

**900 ACE WITH iTC**
- 3 cylinders
- 95 horsepower[1]
- Up to 21.8 mpg (10.8 L/100 km)[3]

**600 ACE WITH iTC**
- 2 cylinders
- 62 horsepower[1]
- Up to 29 mpg (8 L/100 km) – the most fuel-efficient in the entire industry[3]

ACE engines are the best-selling 4-stroke engines in snowmobiling.[4]

**INTELLIGENT THROTTLE CONTROL**
Standard on the ACE engines, the iTC™ system delivers a whole different snowmobiling experience.

- **Driving Modes:** A button on the console enables you to select one of three driving modes. Standard mode ensures a smooth start and linear acceleration; Sport enables full performance and quicker acceleration; ECO® limits top speed and acceleration rates for a more relaxed, fuel-conserving ride.
- **Finger Throttle:** The throttle block can be rotated forward for use as a finger throttle, if preferred. Great for changing hand positions on a long ride and for more control through bumps.

*1 Observed metric horsepower based on internal dyno test performed in optimal conditions.*
*2 Data based on internal engineering trail testing.*
*3 Data based on internal engineering trail testing in ECO mode.*
*4 Based on retail sale results as of December 31, 2019.*

XPS
Experience the advantage of XPS. Oil and care products engineered to extend the life of your ride, tested in the world's harshest conditions, and designed to optimize your vehicle's performance. Learn more at XPSlubricants.com

# SUMMIT® X® WITH EXPERT PACKAGE

The ultimate deep-snow sled with features sharpened for technical terrain riding.



SUMMIT X WITH EXPERT PACKAGE
154 850 E-TEC TURBO R SHOWN

## // WHAT'S NEW

- REV® Gen5 platform
- Rotax® 850 E-TEC® Turbo R engine available
- tMotion™ XT rear suspension with rigid rear arm
- Premium LED headlights
- PowderMax[1] X-Light 3 in. with full-width rods
- Narrower running boards and bodywork
- 10.25 in. color touchscreen display with BRP Connect available
- Adjustable limiter strap with more range
- Adjustable brake lever
- Pilot™ DS 4 skis



SUMMIT X WITH EXPERT PACKAGE
165 850 E-TEC TURBO R SHOWN

## // PACKAGE HIGHLIGHTS

- Rotax 850 E-TEC engine available
- Premium shock package with stiffer calibration
- Short tunnel with lightweight snowflap
- RAS™ 3 front suspension with 34 in. ski stance
- E-TEC SHOT™ starter standard
- Full-length extruded profile running boards with large openings
- Flexible handguards
- Short riser block (120 mm/4.7 in.)
- Sea-level calibration available on select configurations
- Ultra compact and lightweight deep-snow seat
- Belt monitoring system
- Brake reservoir protector

| ROTAX ENGINE | 850 E-TEC TURBO R | 850 E-TEC |
|---|---|---|
| Engine details | Liquid-cooled, two-stroke, turbocharged, eRAVE™ | Liquid-cooled, two-stroke, eRAVE |
| Horsepower | 180 up to 8,000 ft. | 165 |
| Cylinders – Displacement | 2 – 849 cc | 2 – 849 cc |
| Bore – Stroke (mm) | 82 – 80.4 | 82 – 80.4 |
| Carburation | E-TEC direct injection with additional booster injectors | E-TEC direct injection with additional booster injectors |
| Fuel type – Octane | Premium unleaded – 91 | Premium unleaded – 91 |
| Fuel tank (L/US gal) | 36/9.5 | 36/9.5 |
| Oil tank capacity (L/qt) | 3.4/3.6 | 3.4/3.6 |

| POWERTRAIN | | |
|---|---|---|
| Drive clutch | pDrive™ with clickers | pDrive with clickers |
| Driven clutch | QRS Vent Plus | QRS Vent Plus |
| Drive sprocket pitch | 89 mm/3.5 in. | 89 mm/3.5 in. |

| DRY WEIGHT | |
|---|---|
| Dry weight | 449 lb (154 in.)<br>456 lb (165 in.)<br>462 lb (175 in.)<br>430 lb (154 in.)<br>437 lb (165 in.) |

| DIMENSIONS | |
|---|---|
| Overall vehicle length | 3,188 mm/125.5 in. (154 in.)<br>3,299 mm/129.9 in. (165 in.)<br>3,454 mm/136 in. (175 in.) |
| Overall vehicle width | 1,080 to 1,110 mm/42.5 to 43.7 in. |
| Overall vehicle height | 1,306 mm/51.4 in. |
| Ski stance | 864 mm/34 in. adjustable |
| Track (Length x Width x Profile) | PowderMax X-Light:<br>154 x 16 x 3.0 in.<br>165 x 16 x 3.0 in.<br>175 x 16 x 3.0 in. (850 E-TEC Turbo R only) |

| COLOR |
|---|
| Platinum Silver / Manta Green (painted) |
| Timeless Black (painted) |

| SUSPENSION | |
|---|---|
| Front suspension | RAS 3 |
| Front shock | HPG[1] Plus with lightweight springs |
| Front suspension travel | 207 mm/8.2 in. |
| Rear suspension | tMotion XT |
| Center shock | HPG Plus with lightweight spring |
| Rear shock | KYB[1] Pro 36 EA-3 |
| Rear suspension travel | 264 mm/10.4 in. |

| FEATURES | |
|---|---|
| Platform | REV Gen5 |
| Skis | Pilot DS 4 |
| Seating | Deep-snow ultra-compact and lightweight |
| Handlebar | Tapered with J-hooks/Grab handle |
| Riser block height | 120 mm/4.7 in. |
| Starter | SHOT |
| Reverse | RER™ |
| Brake system | Brembo[1] with adj. lever |
| Heated throttle lever/grips | Standard |
| Gauge type | 4.5 in. digital<br>10.25 in. touchscreen (opt.) |
| Windshield | Optional |
| Runner – Carbide | Square 3/8 in. – 4 in. |
| Bumpers (front/rear) | Std/Std |

## // FEATURE HIGHLIGHTS

**1 REV Gen5 deep-snow platform**

Lighter, narrower and more refined for improved technical riding and a next-level experience that's all about spending unforgettable days in the deep stuff.

**2 Rotax 850 E-TEC Turbo R engine**

The most powerful factory-built 2-stroke turbocharged engine in snowmobiling. Its instant response cranks out a full 180 HP up to 8,000 feet of elevation. Sophisticated design keeps weight down and integrates flawlessly with the REV Gen5 chassis for maximum agility. Factory install ensures peace of mind and incredible reliability.

**3 PowderMax X-Light with full-width rods**

This lighter, redesigned track unique to the Expert package, has a stiffer edge that complements the tMotion XT for more rigidity in the rear skid.




SUMMIT X WITH EXPERT PACKAGE
165 850 E-TEC TURBO R SHOWN

**4 tMotion™ XT with rigid rear arm**

In addition to 3 lbs of weight savings and increased capacity, the tMotion XT dons a locked rear arm for more rigidity in technical maneuvers.

**5 10.25 in. color touchscreen display with BRP Connect**

A high-resolution infotainment system that puts an interactive, informative and customizable experience that's both seamless and simple, right at your fingertips.

**6 E-TEC SHOT starter**

Push-button start with almost no added weight. Uses energy stored in the lightweight ultracapacitor to turn the magneto and with E-TEC technology, start the engine.

# SUMMIT® X®

Longer climbs, tighter tree lines and deeper powder.



SUMMIT X
154 850 E-TEC SHOWN



SUMMIT X
165 850 E-TEC TURBO R SHOWN

## // WHAT'S NEW

- REV® Gen5 platform
- Rotax® 850 E-TEC® Turbo R engine available
- tMotion™ X rear suspension
- Premium LED headlights
- PowderMax[1] X-Light 3 in. with FlexEdge[1] available
- Narrower running boards and body work
- 10.25 in. color touchscreen display with BRP Connect available
- RAS™ 3 front suspension with 34 in. ski stance

## // PACKAGE HIGHLIGHTS

- Rotax 850 E-TEC engine available
- Short tunnel with lightweight snowflap
- E-TEC SHOT™ starter available
- Full-length extruded profile running boards with large openings
- Low handlebar strap
- Sea-level calibration available on select configurations
- Compact and lightweight deep-snow seat
- Pilot DS 3 skis
- Belt monitoring system

| ROTAX ENGINE | 850 E-TEC TURBO R | 850 E-TEC |
|---|---|---|
| Engine details | Liquid-cooled, two-stroke, turbocharged, eRAVE™ | Liquid-cooled, two-stroke, eRAVE |
| Horsepower | 180 up to 8,000 ft. | 165 |
| Cylinders – Displacement | 2 – 849 cc | 2 – 849 cc |
| Bore – Stroke (mm) | 82 – 80.4 | 82 – 80.4 |
| Carburation | E-TEC direct injection with additional booster injectors | E-TEC direct injection with additional booster injectors |
| Fuel type – Octane | Premium unleaded – 91 | Premium unleaded – 91 |
| Fuel tank (L/US gal) | 36/9.5 | 36/9.5 |
| Oil tank capacity (L/qt) | 3.4/3.6 | 3.4/3.6 |

| POWERTRAIN | | |
|---|---|---|
| Drive clutch<br>Driven clutch | pDrive™ with clickers<br>QRS Vent Plus | pDrive with clickers<br>QRS Vent Plus |
| Drive sprocket pitch | 89 mm/3.5 in. | 89 mm/3.5 in. |

| DRY WEIGHT | | |
|---|---|---|
| Dry weight | 448 lb (154 in.)<br>454 lb (165 in.) | 429 lb (154 in.)<br>436 lb (165 in.) |

| DIMENSIONS | |
|---|---|
| Overall vehicle length | 3,188 mm/125.5 in. (154 in.)<br>3,299 mm/129.9 in. (165 in.) |
| Overall vehicle width | 1,080 to 1,110 mm/42.5 to 43.7 in. |
| Overall vehicle height | 1,395 mm/54.9 in. |
| Ski stance | 864 mm/34 in. adjustable |
| Track<br>(Length x Width x Profile) | PowderMax Light with FlexEdge:<br>154 x 16 x 2.5 in.<br>165 x 16 x 2.5 in. (sea-level opt. only)<br>PowderMax X-Light with FlexEdge:<br>154 x 16 x 3.0 in.<br>165 x 16 x 3.0 in. |

| COLOR | |
|---|---|
| Catalyst Grey / Spartan Red | |
| Timeless Black (painted) | |

| SUSPENSION | |
|---|---|
| Front suspension | RAS 3 |
| Front shock | HPG[1] Plus with lightweight springs |
| Front suspension travel | 207 mm/8.2 in. |
| Rear suspension | tMotion X |
| Center shock | HPG Plus with lightweight spring |
| Rear shock | HPG Plus |
| Rear suspension travel | 264 mm/10.4 in. |

| FEATURES | |
|---|---|
| Platform | REV Gen5 |
| Skis | Pilot DS 3 |
| Seating | Deep-snow compact and lightweight |
| Handlebar | Tapered with J-hooks/Grab handle |
| Riser block height | 165 mm/6.5 in. |
| Starter | SHOT, Electric (opt. select models), Manual (opt. select models) |
| Reverse | RER™ |
| Brake system | Brembo[1] |
| Heated throttle lever/grips | Standard |
| Gauge type | 4.5 in. digital<br>10.25 in. touchscreen (opt.) |
| Windshield | Optional |
| Runner – Carbide | Square 3/8 in. – 4 in. |
| Bumpers (front/rear) | Std/Std |

## // FEATURE HIGHLIGHTS

**1 REV Gen5 deep-snow platform**

Lighter, narrower and more refined for improved technical riding and a next-level experience that's all about spending unforgettable days in the deep stuff.

**2 Rotax 850 E-TEC Turbo R engine**

The most powerful factory-built 2-stroke turbocharged engine in snowmobiling. Its instant response cranks out a full 180 HP up to 8,000 feet of elevation. Sophisticated design keeps weight down and integrates flawlessly with the REV Gen5 chassis for maximum agility. Factory install ensures peace of mind and incredible reliability.

**3 HPG Plus shock package**

Highest quality KYB[1] lightweight high-pressure gas shocks front and rear. Rebuildable and revalvable.

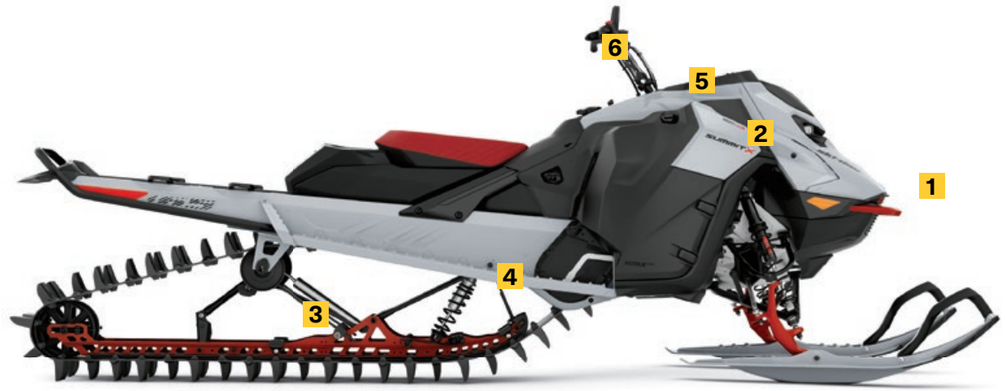


SUMMIT X
165 850 E-TEC TURBO R SHOWN

**4 Improved profile running boards**

Front-to-back extruded grid-style board allowing snow to pass through easily, preventing washout and trenching, plus clears footrests for grip. Flatter foot position for comfort and control.

**5 10.25 in. color touchscreen display with BRP Connect**

A high-resolution infotainment system that puts an interactive, informative and customizable experience that's both seamless and simple, right at your fingertips.

**6 E-TEC SHOT starter**

Push-button start with almost no added weight. Uses energy stored in the lightweight ultracapacitor to turn the magneto and with E-TEC technology, start the engine.

# SUMMIT® EDGE®

This high-end in-season package is loaded with proven technical features.



SUMMIT EDGE
165 850 E-TEC SHOWN



SUMMIT EDGE
165 850 E-TEC SHOWN

## // WHAT'S NEW

- REV® Gen5 platform
- tMotion™ X rear suspension
- Premium LED headlights
- PowderMax[1] X-Light 3 in. with FlexEdge[1] available
- Narrower running boards and body work

## // PACKAGE HIGHLIGHTS

- Rotax® 850 E-TEC® engine
- High-quality HPG[1] shock package
- RAS™ 3 front suspension with lightweight ski spindle and revised ski stopper
- E-TEC SHOT™ starter standard
- Deep-snow running boards with large openings
- Compact and lightweight deep-snow seat
- Pilot™ DS 3 skis
- Belt monitoring system

| ROTAX ENGINE | 850 E-TEC |
|---|---|
| Engine details | Liquid-cooled, two-stoke, eRAVE™ |
| Horsepower | 165 |
| Cylinders – Displacement | 2 – 849 cc |
| Bore – Stroke (mm) | 82 – 80.4 |
| Carburation | E-TEC direct injection with additional booster injectors |
| Fuel type – Octane | Premium unleaded – 91 |
| Fuel tank (L/US gal) | 36/9.5 |
| Oil tank capacity (L/qt) | 3.4/3.6 |

| POWERTRAIN | |
|---|---|
| Drive clutch | pDrive™ with clickers |
| Driven clutch | QRS Vent Plus |
| Drive sprocket pitch | 89 mm/3.5 in. |

| DRY WEIGHT | |
|---|---|
| Dry weight | 445 lb (154 in.)<br>448 lb (165 in.)<br>454 lb (175 in.) |

| DIMENSIONS | |
|---|---|
| Overall vehicle length | 3,188 mm/125.5 in. (154 in.)<br>3,299 mm/129.9 in. (165 in.)<br>3,454 mm/136 in. (175 in.) |
| Overall vehicle width | 1,080 to 1,110 mm/42.5 to 43.7 in. |
| Overall vehicle height | 1,395 mm/54.9 in. |
| Ski stance | 930 mm/36 in. adjustable |
| Track (Length x Width x Profile) | PowderMax Light with FlexEdge:<br>154 x 16 x 2.5 in.<br>PowderMax X-Light with FlexEdge:<br>154 x 16 x 3.0 in.<br>165 x 16 x 3.0 in.<br>175 x 16 x 3.0 in. |

| COLOR |
|---|
| Catalyst Grey / Neo Yellow |
| Timeless Black (painted) |

| SUSPENSION | |
|---|---|
| Front suspension | RAS 3 |
| Front shock | HPG |
| Front suspension travel | 215 mm/8.5 in. |
| Rear suspension | tMotion |
| Center shock | HPG |
| Rear shock | HPG |
| Rear suspension travel | 264 mm/10.4 in. |

| FEATURES | |
|---|---|
| Platform | REV Gen5 |
| Skis | Pilot DS 3 |
| Seating | Deep-snow compact and lightweight |
| Handlebar | Tapered U-shaped aluminum with J-hooks/Low grab handle |
| Riser block height | 165 mm/6.5 in. |
| Starter | SHOT |
| Reverse | RER™ |
| Brake system | Brembo[†] |
| Heated throttle lever/grips | Standard |
| Gauge type | 4.5 in. digital |
| Windshield | Optional |
| Runner – Carbide | Square 3/8 in. – 4 in. |
| Bumpers (front/rear) | Std/Std |

## // FEATURE HIGHLIGHTS

**1 REV Gen5 deep-snow platform**
Lighter, narrower and more refined for improved technical riding and a next-level experience that's all about spending unforgettable days in the deep stuff.

**2 Rotax 850 E-TEC engine**
Incredible power and unmatched dynamic response with exclusive E-TEC direct-injection technology. Exceptional, proven durability and excellent fuel and oil economy.

**3 Short tunnel**
Shorter tunnel length without snowflap for greater deep-snow capabilities with more clearance and lighter overall weight. Standard rear fender with LinQ-ready attachment points.




SUMMIT EDGE
165 850 E-TEC SHOWN

**4 High-quality HPG shock package**
Extremely capable high-pressure gas shocks by KYB.[†]

**5 tMotion X rear suspension**
With 90% new parts, this complete redesign increases capacity and reduces weight by 2.5 lbs.

**6 E-TEC SHOT starter**
Push-button start with almost no added weight. Uses energy stored in the lightweight ultracapacitor to turn the magneto and with E-TEC technology, start the engine.

# SUMMIT® SP®

An excellent deep-snow machine for any rider.



SUMMIT SP
165 850 E-TEC SHOWN



SUMMIT SP
165 850 E-TEC SHOWN

## // WHAT'S NEW

- REV® Gen5 platform
- tMotion™ X rear suspension
- LED headlights
- PowderMax† X-Light 3 in. with FlexEdge† available
- Narrower running boards and body work

## // PACKAGE HIGHLIGHTS

- Rotax® 850 E-TEC® engine
- High-quality HPG† shock package
- RAS™ 3 front suspension with lightweight ski spindle and revised ski stopper
- E-TEC SHOT™ starter available
- Deep-snow running boards with large openings
- Glove box with 3.5 L of storage
- Low handlebar strap
- Pilot™ DS 3 skis
- Belt monitoring system

| ROTAX ENGINE | 850 E-TEC |
|---|---|
| Engine details | Liquid-cooled, two-stroke, eRAVE™ |
| Horsepower | 165 |
| Cylinders – Displacement | 2 – 849 cc |
| Bore – Stroke (mm) | 82 – 80.4 |
| Carburation | E-TEC direct injection with additional booster injectors |
| Fuel type – Octane | Premium unleaded – 91 |
| Fuel tank (L/US gal) | 36/9.5 |
| Oil tank capacity (L/qt) | 3.4/3.6 |

| POWERTRAIN | |
|---|---|
| Drive clutch | pDrive™ with clickers |
| Driven clutch | QRS Vent Plus |
| Drive sprocket pitch | 73 mm/2.86 in. (146 in.)<br>89 mm/3.5 in. (154 – 165 in.) |

| DRY WEIGHT | |
|---|---|
| Dry weight | 447 lb (146 in.)<br>443 lb (154 in.)<br>447 lb (165 in.) |

| DIMENSIONS | |
|---|---|
| Overall vehicle length | 3,208 mm/122.4 in. (146 in.)<br>3,318 mm/130.6 in. (154 in.)<br>3,451 mm/135.9 in. (165 in.) |
| Overall vehicle width | 1,080 to 1,110 mm/42.5 to 43.7 in. |
| Overall vehicle height | 1,395 mm/54.9 in. |
| Ski stance | 930 mm/36 in. adjustable |
| Track (Length x Width x Profile) | PowderMax II with FlexEdge:<br>146 x 16 x 2.5 in.<br>PowderMax Light with FlexEdge:<br>154 x 16 x 2.5 in.<br>165 x 16 x 2.5 in.<br>PowderMax X-Light with FlexEdge:<br>154 x 16 x 3.0 in.<br>165 x 16 x 3.0 in. |

| COLOR | |
|---|---|
| Catalyst Grey / Neo Yellow | |
| Timeless Black (painted) | |

| SUSPENSION | |
|---|---|
| Front suspension | RAS 3 |
| Front shock | HPG |
| Front suspension travel | 215 mm/8.5 in. |
| Rear suspension | tMotion X |
| Center shock | HPG |
| Rear shock | HPG |
| Rear suspension travel | 264 mm/10.4 in. |

| FEATURES | |
|---|---|
| Platform | REV Gen5 |
| Skis | Pilot DS 3 |
| Seating | Deep-snow |
| Handlebar | Tapered with J-hooks/Grab handle |
| Riser block height | 165 mm/6.5 in. |
| Starter | Electric, SHOT (opt.),<br>Manual (opt. select models) |
| Reverse | RER™ |
| Brake system | Brembo† |
| Heated throttle lever/grips | Standard |
| Gauge type | 4.5 in. digital |
| Windshield | Optional |
| Runner – Carbide | Square 3/8 in. – 4 in. |
| Bumpers (front/rear) | Std/Std |



## // FEATURE HIGHLIGHTS

**1 REV Gen5 deep snow platform**
Lighter, narrower and more refined for improved technical riding and a next-level experience that's all about spending unforgettable days in the deep stuff.

**2 PowderMax X-Light with FlexEdge Track**
Refreshed with a new lug pattern and optimized to trim weight, this new track brings faster track speeds and better traction.

**3 Lightweight ski spindle**
Lightweight alloy spindle with revised geometry and new ski stopper to reduce ski drag for more predictable handling and a confidence-inspiring ride in technical sidehills and rough terrain.




SUMMIT SP
165 850 E-TEC SHOWN

**4 High-quality HPG shock package**
Extremely capable high-pressure gas shocks by KYB.†

**5 tMotion X rear suspension**
With 90% new parts, this complete redesign increases capacity and reduces weight by 2.5 lbs.

**6 E-TEC SHOT starter**
Push-button start with almost no added weight. Uses energy stored in the lightweight ultracapacitor to turn the magneto and with E-TEC technology, start the engine.

# SUMMIT® NEO®

A brand new sled with compact ergonomics that gives riders of any age a less intimidating experience with a full-size fun factor.

## // PACKAGE HIGHLIGHTS

- REV® Gen4 platform
- Compact ergonomics
- Rotax 600 EFI – 40 engine
- RAS™ 3 front suspension
- Neo rear suspension
- Motion control shocks
- 146 x 14 x 1.6 Cobra† with FlexEdge† track
- Pilot™ DS 2 skis
- Electric start
- RER™ reverse
- pDrive™ clutch

## // NEO+ PACKAGE

- Rotax® 600 EFI – 55 engine
- HPG† Front shocks
- 146 x 15 x 1.75 Hurricane† with FlexEdge track
- Low mountain strap
- Handguards



SUMMIT NEO SHOWN



SUMMIT NEO+ SHOWN

| ROTAX ENGINE | 600 EFI – 55 | 600 EFI – 40 |
|---|---|---|
| Engine details | Liquid-cooled, two-stroke | Liquid-cooled, two-stroke |
| Horsepower | 55 | 40 |
| Cylinders – Displacement | 2 – 599.4 cc | 2 – 599.4 cc |
| Bore – Stroke (mm) | 72.3 – 73 | 72.3 – 73 |
| Carburation | EFI | EFI |
| Fuel type – Octane | Regular unleaded – 87 | Regular unleaded – 87 |
| Fuel tank (L/US gal) | 36/9.5 | 36/9.5 |
| Oil tank capacity (L/qt) | 3.4/3.6 | 3.4/3.6 |

| POWERTRAIN | | |
|---|---|---|
| Drive clutch<br>Driven clutch | pDrive<br>QRS Lite | pDrive<br>QRS Lite |
| Drive sprocket pitch | 73 mm/2.86 in. | 73 mm/2.86 in. |

| DRY WEIGHT | | |
|---|---|---|
| Dry weight | 430 lb (Neo+) | 419 lb (Neo) |

| DIMENSIONS | |
|---|---|
| Overall vehicle length | 3,174 mm/125 in. |
| Overall vehicle width | 1,080 to 1,110 mm/42.5 to 43.7 in. |
| Overall vehicle height | 1,095 mm/43 in. |
| Ski stance | 864 mm/34 in. adjustable |
| Track<br>(Length x Width x Profile) | Cobra with FlexEdge (Neo):<br>146 x 14 x 1.35 in.<br>Hurricane with FlexEdge (Neo+):<br>146 x 15 x 1.75 in. |

| COLOR |
|---|
| Neo Yellow / Catalyst Grey (Neo) |
| Neo Yellow / Black (Neo+) |

| SUSPENSION | |
|---|---|
| Front suspension | RAS 3 |
| Front shock | Motion Control (Neo)/HPG (Neo+) |
| Front suspension travel | 196 mm/7.7 in. |
| Rear suspension | Neo |
| Center shock | Torsion spring |
| Rear shock | Motion Control |
| Rear suspension travel | 220 mm/8.7 in. |

| FEATURES | |
|---|---|
| Platform | REV Gen4 |
| Skis | Pilot DS 2 |
| Seating | Deep-snow compact and lightweight |
| Handlebar | Narrow standard with J-hooks<br>Grab handle (Neo+) |
| Riser block height | 90 mm/3.5 in. |
| Starter | Electric |
| Reverse | RER |
| Brake system | Brembo† |
| Heated throttle lever/grips | Standard |
| Gauge type | 4.5 in. digital |
| Windshield | Optional |
| Runner – Carbide | Square 3/8 in. (optional) |
| Bumpers (front/rear) | Std/Std |

## // FEATURE HIGHLIGHTS



SUMMIT NEO+ SHOWN

### 1 REV Gen4 Neo off-trail platform

Built to go just about anywhere and loaded with mountain-inspired features for traction and flotability. The new Summit Neo re-imagines the REV Gen4 platform with a compact feel and delivers insane value to riders of any experience level.

### 2 Compact Ergonomics

Makes the vehicule easier to control and less intimidating. Includes lower vehicle height, smaller seat, lower handlebars, narrow handlebar grips and a shorter deplacement throttle lever.

### 3 600 EFI – 40 & 55 engines

Plenty of horsepower kick for a variety of experience levels and a truly high degree of reliability and ease of use with this electronic fuel injection two-stroke. Standard with electric start.

# FREERIDE™

Live large, live free
and go big.



FREERIDE 165
850 E-TEC TURBO R SHOWN

## // WHAT'S NEW

- REV® Gen5 platform
- Rotax® 850 E-TEC® Turbo R engine available
- tMotion™ X rear suspension
- Premium LED headlights
- PowderMax[1] X-Light 3 in. with FlexEdge[1] available
- Narrower running boards and body work
- 10.25" color touchscreen display with BRP Connect available
- Adjustable brake lever

## // PACKAGE HIGHLIGHTS

- Rotax 850 E-TEC engine available
- High-performance KYB[1] Pro shock package with lightweight springs
- Short tunnel with lightweight snowflap
- RAS™ 3 front suspension with lightweight ski spindle and revised ski stopper
- E-TEC SHOT™ starter standard
- Full-length extruded profile running boards with large openings
- Sway bar quick-disconnect
- Low handlebar strap
- Sea-level calibration available on select configurations
- Compact and lightweight deep-snow seat
- Pilot™ DS 3 skis
- Belt monitoring system

| ROTAX ENGINE | 850 E-TEC TURBO R | 850 E-TEC |
|---|---|---|
| Engine details | Liquid-cooled, two-stroke, turbocharged, eRAVE™ | Liquid-cooled, two-stroke, eRAVE |
| Horsepower | 180 up to 8,000 ft. | 165 |
| Cylinders – Displacement | 2 – 849 cc | 2 – 849 cc |
| Bore – Stroke (mm) | 82 – 80.4 | 72.3 – 73 |
| Carburation | E-TEC direct injection with additional booster injectors | E-TEC direct injection with additional booster injectors |
| Fuel type – Octane | Premium unleaded – 91 | Premium unleaded – 91 |
| Fuel tank (L/US gal) | 36/9.5 | 36/9.5 |
| Oil tank capacity (L/qt) | 3.4/3.6 | 3.4/3.6 |

| POWERTRAIN | | |
|---|---|---|
| Drive clutch<br>Driven clutch | pDrive™ with clickers<br>QRS Vent Plus | pDrive with clickers<br>QRS Vent Plus |
| Drive sprocket pitch | 89 mm/3.5 in. | 73 mm/2.86 in. (146 in.)<br>89 mm/3.5 in. (154–165 in.) |

| DRY WEIGHT | | |
|---|---|---|
| Dry weight | 461 lb (154 in.)<br>466 lb (165 in.) | 447 lb (146 in.)<br>442 lb (154 in.)<br>446 lb (165 in.) |

| DIMENSIONS | |
|---|---|
| Overall vehicle length | 3,058 mm/120.4 in. (146 in.)<br>3,188 mm/125.5 in. (154 in.)<br>3,299 mm/129.9 in. (165 in.) |
| Overall vehicle width | 1,080 to 1,110 mm/42.5 to 43.7 in. |
| Overall vehicle height | 1,395 mm/54.9 in. |
| Ski stance | 930 mm/36 in. adjustable |
| Track<br>(Length x Width x Profile) | PowderMax II with FlexEdge:<br>146 x 16 x 2.5 in.<br>PowderMax Light with FlexEdge:<br>154 x 16 x 2.5 in.<br>165 x 16 x 2.5 in. (sea-level opt. only)<br>PowderMax X-Light with FlexEdge:<br>154 x 16 x 3.0 in.<br>165 x 16 x 3.0 in. |

| COLOR | |
|---|---|
| Timeless Black / Spartan Red (painted) | |

| SUSPENSION | |
|---|---|
| Front suspension | RAS 3 |
| Front shock | KYB Pro 36 EA-3 w/ lightweight springs |
| Front suspension travel | 215 mm/8.5 in. |
| Rear suspension | tMotion X |
| Center shock | KYB Pro 40 EA-3 w/ lightweight spring |
| Rear shock | KYB Pro 40 EA-3 |
| Rear suspension travel | 264 mm/10.4 in. |

| FEATURES | |
|---|---|
| Platform | REV Gen5 |
| Skis | Pilot DS 3 |
| Seating | Deep-snow compact and lightweight |
| Handlebar | Tapered U-shaped aluminum with J-hooks/Low grab handle |
| Riser block height | 165 mm/6.5 in. |
| Starter | 850 E-TEC: SHOT, Electric (opt. Select models)<br>850 E-TEC Turbo R: SHOT |
| Reverse | RER™ |
| Brake system | Brembo[1] |
| Heated throttle lever/grips | Standard |
| Gauge type | 4.5 in. digital<br>10.25 in. touchscreen (opt.) |
| Windshield | Optional |
| Runner – Carbide | Square 3/8 in. – 4 in. |
| Bumpers (front/rear) | Std/Std |

## // FEATURE HIGHLIGHTS

**1 REV Gen5 deep snow platform**

Lighter, narrower and more refined for improved technical riding and a next-level experience that's all about spending unforgettable days in the deep stuff.

**2 Rotax 850 E-TEC Turbo R engine**

The first-ever factory-built 2-stroke turbocharged engine in any industry. It boasts instant response and a full 165 HP up to 8,000 feet of elevation. Sophisticated design integrates flawlessly with the REV Gen4 platform for maximum agility. Factory installation ensures peace of mind and incredible reliability.

**3 tMotion™ X rear suspension with reinforced rails**

With 90% new parts, this complete redesign increases capacity and reduces weight by 2.5 lbs. Reinforced rails ensure maximum durability in those big drops and jumps.




FREERIDE 165
850 E-TEC TURBO R SHOWN

**4 High-performance KYB Pro shock package with lightweight springs**

Lightweight, extreme-capability, extreme-durability shocks for control in the toughest conditions. Easy adjust-equipped for dialed-in compression.

**5 10.25 in. color touchscreen display with BRP Connect**

A high-resolution infotainment system that puts an interactive, informative and customizable experience that's both seamless and simple, right at your fingertips.

**6 E-TEC SHOT starter**

Push-button start with almost no added weight. Uses energy stored in the lightweight ultracapacitor to turn the magneto and with E-TEC technology, starts the engine.

# BACKCOUNTRY™ X-RS®

The most aggressive crossover vehicle with snocross attitude and go-anywhere capability.



BACKCOUNTRY X-RS
154 850 E-TEC SHOWN

## // PACKAGE HIGHLIGHTS

- Rotax® 850 E-TEC® engine
- High-performance KYB[1] Pro shock package
- 7.8 in. wide LCD display with BRP Connect available
- RAS™ X front suspension
- cMotion™ rear suspension
- E-TEC SHOT™ starter available
- RS running boards
- Glove box with 4 L/1 gal of storage
- *ULTIMATE* color options with panel wrap: Supreme look and finish, maximum protection
- Backlit multifunction handlebar controls
- pDrive™ clutch with clickers
- Transparent handguards
- Open toe-hold
- Pilot™ DS 2 skis
- Adjustable ski stance
- Belt monitoring system

| ROTAX ENGINE | 850 E-TEC |
|---|---|
| Engine details | Liquid-cooled, two-stroke, eRAVE™ |
| Horsepower | 165 |
| Cylinders – Displacement | 2 – 849 cc |
| Bore – Stroke (mm) | 82 – 80.4 |
| Carburation | E-TEC direct injection with additional booster injectors |
| Fuel type – Octane | Premium unleaded – 91 |
| Fuel tank (L/US gal) | 36/9.5 |
| Oil tank capacity (L/qt) | 3.4/3.6 |

| POWERTRAIN | |
|---|---|
| Drive clutch<br>Driven clutch | pDrive with clickers<br>QRS Vent Plus |
| Drive sprocket pitch | 73 mm/2.86 in. |

| DRY WEIGHT | |
|---|---|
| Dry weight | 472 lb (146 in.)<br>485 lb (154 in.) |

| DIMENSIONS | |
|---|---|
| Overall vehicle length | 3,174 mm/125 in. (146 in.)<br>3,284 mm/129.3 in. (154 in.) |
| Overall vehicle width | 1,140 to 1,180 mm/44.9 to 46.5 in. |
| Overall vehicle height | 1,283 mm/50.5 in. |
| Ski stance | 1,000 mm / 39 in. adjustable |
| Track<br>(Length x Width x Profile) | Cobra: 146 x 15 x 1.6 in.<br>Ice Cobra: 146 x 15 x 1.6 in.<br>PowderMax[1]: 146 x 16 x 2.0 in.<br>154 x 16 x 2.0 in.<br>154 x 16 x 2.5 in. |

| COLOR | |
|---|---|
| *ULTIMATE* Platinum Silver / Manta Green | |
| *ULTIMATE* Black | |

| SUSPENSION | |
|---|---|
| Front suspension | RAS X |
| Front shock | KYB Pro 36 R EA |
| Front suspension travel | 220 mm/8.7 in. |
| Rear suspension | cMotion |
| Center shock | KYB Pro 40 EA |
| Rear shock | KYB Pro 40 EA |
| Rear suspension travel | 239 mm/9.4 in. (154, 165 in.) |

| FEATURES | |
|---|---|
| Platform | REV® Gen4 |
| Skis | Pilot DS 2 |
| Seating | Trail performance |
| Handlebar | U-shaped aluminum with J-hooks/<br>Transparent handguards |
| Riser block height | 120 mm/4.7 in. |
| Starter | Electric, SHOT<br>(opt. select configurations) |
| Reverse | RER™ |
| Brake system | Brembo[1] |
| Heated throttle lever/grips | Standard |
| Gauge type | 7.2 in. digital<br>Large panoramic 7.8 in. wide LCD color display in option |
| Windshield | Optional |
| Runner – Carbide | Round 7/16 in. – 4 in. |
| Bumpers (front/rear) | Std/Std |

## // FEATURE HIGHLIGHTS

**1 Rotax 850 E-TEC engine**

Next generation of the most advanced direct-injection 2-stroke engine technology. Designed for reliability and durability with proven 4-stroke and long-lasting automotive technologies.

**2 High-performance KYB Pro shock package**

Extreme-capability, extreme-durability shocks for control in the toughest conditions. Easy adjust-equipped for dialed-in compression and rebound.

**3 cMotion 146 or 154 rear suspension**

Crossover-specific suspension uses best principles of the rMotion™ trail and tMotion™ mountain skids for confident cornering and agile boondocking.




BACKCOUNTRY X-RS
146 850 E-TEC SHOWN

**4 Large panoramic 7.8 in. wide LCD color display available**

Wide-screen full-color display lets riders truly customize their ride from behind the bars. Choose your preferred sled info, and see app-integrated information in a split-screen format with GPS, Bluetooth[1] music, helmet-to-helmet communication and more.

**5 RS running boards**

Designed for aggressive stand-up riding, they are flatter for most of their length, wider and strong. Thicker aluminum sheet, plus front and rear reinforcements to withstand tough landings.

**6 E-TEC SHOT starter**

Push-button start with almost no added weight. Uses energy stored in the lightweight ultracapacitor to turn the magneto and with E-TEC technology, start the engine.

# BACKCOUNTRY™ X®

A 50-50 sled with the most advanced technology, plus off-trail capability and rough-trail performance.



BACKCOUNTRY X
146 850 E-TEC SHOWN



BACKCOUNTRY X
146 850 E-TEC SHOWN

## // PACKAGE HIGHLIGHTS

- Rotax® 850 E-TEC® engine
- High-performance shock package
- 7.8 in. wide LCD display with BRP Connect available
- RAS™ X crossover front suspension
- cMotion™ rear suspension
- E-TEC SHOT™ starter available
- Improved deep-snow running boards with large openings
- Glove box with 4 L/1 gal of storage
- Low windshield
- Backlit multifunction handlebar controls
- pDrive™ clutch with clickers
- Transparent handguards
- Open toe-hold
- Pilot™ DS 2 skis
- Adjustable ski stance
- Belt monitoring system

| ROTAX ENGINE | 850 E-TEC |
|---|---|
| Engine details | Liquid-cooled, two-stroke, eRAVE™ |
| Horsepower | 165 |
| Cylinders – Displacement | 2 – 849 cc |
| Bore – Stroke (mm) | 82 – 80.4 |
| Carburation | E-TEC direct injection with additional booster injectors |
| Fuel type – Octane | Premium unleaded – 91 |
| Fuel tank (L/US gal) | 36/9.5 |
| Oil tank capacity (L/qt) | 3.4/3.6 |

| POWERTRAIN | |
|---|---|
| Drive clutch | pDrive with clickers |
| Driven clutch | QRS Vent Plus |
| Drive sprocket pitch | 73 mm/2.86 in. |

| DRY WEIGHT | |
|---|---|
| Dry weight | 462 lb |

| DIMENSIONS | |
|---|---|
| Overall vehicle length | 3,174 mm/125 in. |
| Overall vehicle width | 1,140 to 1,180 mm/44.9 to 46.5 in. |
| Overall vehicle height | 1,283 mm/50.5 in. |
| Ski stance | 1,000 mm/39 in. adjustable |
| Track (Length x Width x Profile) | Cobra: 146 x 15 x 1.6 in.<br>Ice Cobra: 146 x 15 x 1.6 in.<br>PowderMax†: 146 x 16 x 2.0 in. |

| COLOR |
|---|
| Catalyst Grey / Spartan Red |
| Timeless Black |

| SUSPENSION | |
|---|---|
| Front suspension | RAS X |
| Front shock | HPG† Plus |
| Front suspension travel | 220 mm/8.7 in. |
| Rear suspension | cMotion |
| Center shock | HPG Plus |
| Rear shock | KYB† Pro 36 EA |
| Rear suspension travel | 239 mm/9.4 in. |

| FEATURES | |
|---|---|
| Platform | REV® Gen4 |
| Skis | Pilot DS 2 |
| Seating | Trail performance |
| Handlebar | U-shaped aluminum with J-hooks/ Transparent handguards |
| Riser block height | 120 mm/4.7 in. |
| Starter | Electric, SHOT (opt. select configurations) |
| Reverse | RER™ |
| Brake system | Brembo† |
| Heated throttle lever/grips | Standard |
| Gauge type | 7.2 in. digital<br>Large panoramic 7.8 in. wide LCD color display in option |
| Windshield | 360 mm/14 in. |
| Runner – Carbide | Square 3/8 in. – 4 in. |
| Bumpers (front/rear) | Std/Std |

## // FEATURE HIGHLIGHTS

**1 Rotax 850 E-TEC engine**

Next generation of the most advanced direct-injection 2-stroke engine technology. Designed for reliability and durability with proven 4-stroke and long-lasting automotive technologies.

**2 Premium shock package**

HPG Plus front and center shocks. KYB Pro 36 Easy-Adjust rear shock featuring compression adjustment. All four shocks are aluminum and rebuildable/revalvable.

**3 cMotion rear suspension**

Crossover-specific suspension uses best principles of the rMotion™ trail and tMotion™ mountain skids for confident cornering and agile boondocking.




BACKCOUNTRY X
146 850 E-TEC SHOWN

**4 Large panoramic 7.8 in. wide LCD color display available**

Wide-screen full-color display lets riders truly customize their ride from behind the bars. Choose your preferred sled info, and see app-integrated information in a split-screen format with GPS, Bluetooth† music, helmet-to-helmet communication and more.

**5 Pilot DS2 skis**

Single keel with excellent sidehilling bite, thanks to thin outer edges. Narrow and thin, yet stiff. Shorter behind the spindle with flat tail for easier counter-steering and sidehilling.

**6 E-TEC SHOT starter**

Push-button start with almost no added weight. Uses energy stored in the lightweight ultracapacitor to turn the magneto and with E-TEC technology, start the engine.

# BACKCOUNTRY™

Loaded with crossover-specific features for spending equal time riding on- or off-trail.



BACKCOUNTRY
600R E-TEC SHOWN



BACKCOUNTRY
146 850 E-TEC SHOWN

## // WHAT'S NEW

- Optional PowderMax[1] 146 x 16 x 2.0 in. track

## // PACKAGE HIGHLIGHTS

- Rotax® 850 E-TEC® and 600R E-TEC engines available
- High-quality HPG[1] shock package
- 4.5 in. digital display
- RAS™ X crossover front suspension
- cMotion™ rear suspension
- Electric starter
- Improved deep-snow running boards with large openings
- Glove box with 4 L/1 gal of storage
- Low windshield with deflectors
- pDrive™ clutch with clickers
- Transparent handguards
- Open toe-hold
- Pilot™ DS 2 skis
- Adjustable ski stance
- Belt monitoring system (850 E-TEC only)

| ROTAX ENGINE | 850 E-TEC | 600R E-TEC |
|---|---|---|
| Engine details | Liquid-cooled, two-stroke, eRAVE™ | Liquid-cooled, two-stroke, eRAVE |
| Horsepower | 165 | 125 |
| Cylinders – Displacement | 2 – 849 cc | 2 – 599.4 cc |
| Bore – Stroke (mm) | 82 – 80.4 | 72.3 – 73 |
| Carburation | E-TEC direct injection with additional booster injectors | E-TEC direct injection |
| Fuel type – Octane | Premium unleaded – 91 | Premium unleaded – 91 |
| Fuel tank (L/US gal) | 36/9.5 | 36/9.5 |
| Oil tank capacity (L/qt) | 3.4/3.6 | 3.4/3.6 |

| POWERTRAIN | | |
|---|---|---|
| Drive clutch<br>Driven clutch | pDrive with clickers<br>QRS Vent Plus | pDrive with clickers<br>QRS Vent |
| Drive sprocket pitch | 73 mm/2.86 in. | 73 mm/2.86 in. |

| DRY WEIGHT | | |
|---|---|---|
| Dry weight | 482 lb | 466 lb |

| DIMENSIONS | |
|---|---|
| Overall vehicle length | 3,174 mm/125 in. |
| Overall vehicle width | 1,140 to 1,180 mm/44.9 to 46.5 in. |
| Overall vehicle height | 1,283 mm/50.5 in. |
| Ski stance | 1,000 mm/39 in. adjustable |
| Track<br>(Length x Width x Profile) | Cobra:<br>146 x 15 x 1.6 in.<br>PowderMax:<br>146 x 16 x 2.0 in. |

| COLOR |
|---|
| Catalyst Grey / Neo Yellow |
| Timeless Black |

| SUSPENSION | |
|---|---|
| Front suspension | RAS X |
| Front shock | HPG |
| Front suspension travel | 220 mm/8.7 in. |
| Rear suspension | cMotion |
| Center shock | HPG |
| Rear shock | HPG |
| Rear suspension travel | 239 mm/9.4 in. |

| FEATURES | |
|---|---|
| Platform | REV® Gen4 |
| Skis | Pilot DS 2 |
| Seating | Trail performance |
| Handlebar | U-shaped aluminum with J-hooks/ Transparent handguards |
| Riser block height | 120 mm/4.7 in. |
| Starter | Electric |
| Reverse | RER™ |
| Brake system | Brembo[1] |
| Heated throttle lever/grips | Standard |
| Gauge type | 4.5 in. digital display |
| Windshield | 360 mm/14 in. |
| Runner – Carbide | Square 3/8 in. – 4 in. |
| Bumpers (front/rear) | Std/Std |

## // FEATURE HIGHLIGHTS

### 1 Rotax 850 E-TEC and 600R E-TEC engines

Incredible power and unmatched dynamic response with exclusive E-TEC direct-injection technology. Plasma-coated, mono-block cylinders are used for exceptional durability, while the precision of E-TEC injection means you get excellent fuel and oil economy.

### 2 High-quality HPG shock package

Extremely capable high-pressure gas shocks by KYB.[1]

### 3 cMotion rear suspension

Crossover-specific suspension uses best principles of the rMotion™ trail and tMotion™ mountain skids for confident cornering and agile boondocking.




BACKCOUNTRY
146 850 E-TEC SHOWN

### 4 Deep-snow running boards

Massive, strategically shaped openings keep the boards clear. A tall extruded edge adds stiffness and has aggressive boot grips.

### 5 Pilot DS 2 skis

Single keel with excellent sidehilling bite, thanks to thin outer edges. Narrow and thin, yet stiff. Shorter behind the spindle with flat tail for easier counter-steering and sidehilling.

### 6 pDrive clutch with clickers

Clicker ramps allow easy adjustment for top RPM. Ultra-responsive shifting, impressive RMP consistency, lightweight and maintenance-free.

# BACKCOUNTRY™ SPORT

For the value-oriented 50-50 rider wanting an advanced platform and modern engine technology.



BACKCOUNTRY SPORT
146 600 EFI SHOWN

## // PACKAGE HIGHLIGHTS

- Rotax® 600 EFI engine
- 4.5 in. digital display
- RAS™ X crossover front suspension
- cMotion™ rear suspension
- Electric starter
- Deep-snow running boards with large openings
- Glove box with 4 L/1 gal of storage
- Low windshield
- pDrive™ clutch
- Brembo† brake
- Standard with two sets of LinQ® attachment points
- Pilot™ DS 2 skis
- Adjustable ski stance

| ROTAX ENGINE | 600 EFI |
|---|---|
| Engine details | Liquid-cooled, two-stroke |
| Horsepower | 85 |
| Cylinders – Displacement | 2 – 599.4 cc |
| Bore – Stroke (mm) | 72.3 – 73 |
| Carburation | EFI |
| Fuel type – Octane | Regular unleaded – 87 |
| Fuel tank (L/US gal) | 36/9.5 |
| Oil tank capacity (L/qt) | 3.4/3.6 |

| POWERTRAIN | |
|---|---|
| Drive clutch | pDrive |
| Driven clutch | QRS |
| Drive sprocket pitch | 73 mm/2.86 in. |

| DRY WEIGHT | |
|---|---|
| Dry weight | 446 lb |

| DIMENSIONS | |
|---|---|
| Overall vehicle length | 3,174 mm/125 in. |
| Overall vehicle width | 1,140 to 1,180 mm/44.9 to 46.5 in. |
| Overall vehicle height | 1,283 mm/50.5 in. |
| Ski stance | 1,000 mm/39 in. adjustable |
| Track (Length x Width x Profile) | Cobra: 146 x 15 x 1.35 in. PowderMax†: 146 x 16 x 2.0 in. opt. |

| COLOR |
|---|
| Neo Yellow / Black |

| SUSPENSION | |
|---|---|
| Front suspension | RAS X |
| Front shock | Motion Control |
| Front suspension travel | 220 mm/8.7 in. |
| Rear suspension | cMotion |
| Center shock | Motion Control |
| Rear shock | HPG† |
| Rear suspension travel | 239 mm/9.4 in. |

| FEATURES | |
|---|---|
| Platform | REV® Gen4 |
| Skis | Pilot DS 2 |
| Seating | Trail compact |
| Handlebar | U-shaped aluminum with J-hooks |
| Riser block height | 120 mm/4.7 in. |
| Starter | Electric |
| Reverse | RER™ |
| Brake system | Brembo |
| Heated throttle lever/grips | Standard |
| Gauge type | 4.5 in. digital display |
| Windshield | 360 mm/14 in. |
| Runner – Carbide | Square 3/8 in. – 4 in. |
| Bumpers (front/rear) | Std/Std |

## // FEATURE HIGHLIGHTS

**1 Rotax 600 EFI engine**
600cc-class fuel-injected engine delivering 85 horsepower and outstanding economy at an incredible value. Design based on the 600R E-TEC® with proven reliability and ease of ownership at its core with an outsized fun factor.

**2 Electric start**
Saves time and energy, adding immense value for the rider.

**3 cMotion rear suspension**
Crossover-specific suspension uses best principles of the rMotion™ trail and tMotion™ mountain skids for confident cornering and agile boondocking.




BACKCOUNTRY SPORT
146 600 EFI SHOWN

**4 RAS X crossover front suspension**
An updated version of our RAS X trail front end for capability on- and off-trail. Light steering feel optimized for crossover usage with adjustable stance.

**5 Pilot DS2 skis**
Single keel with excellent sidehilling bite, thanks to thin outer edges. Narrow and thin, yet stiff. Shorter behind the spindle with flat tail for easier counter-steering and sidehilling.

**6 Ergo-step side panels**
Design offers natural progression to any of three riding positions for cornering on-trail – from neutral to extreme-forward position.

# RENEGADE® X-RS® WITH COMPETITION PACKAGE

Powerful, lightweight and highly capable race-ready features.



RENEGADE X-RS
WITH COMPETITION PACKAGE SHOWN

## // PACKAGE HIGHLIGHTS

- Rotax® 600R E-TEC® engine
- Racing KYB† Pro shock package
- 7.2 in. digital display
- RAS™ X front suspension
- rMotion™ X rear suspension
- Manual starter
- RS running boards
- pDrive™ clutch
- Low windshield with deflectors
- Two-ply Ripsaw† II Track
- Forward steering post position
- Transparent handguards
- Reinforced rails
- Open toe-hold
- Pilot™ X skis
- Low-profile 90mm riser block
- Backlit multifunction handlebar controls

| ROTAX ENGINE | 600R E-TEC |
|---|---|
| Engine details | Liquid-cooled, two-stroke, eRAVE™ |
| Horsepower | 125 |
| Cylinders – Displacement | 2 – 599.4 cc |
| Bore – Stroke (mm) | 72.3 – 73 |
| Carburation | E-TEC direct injection |
| Fuel type – Octane | Premium unleaded – 91 |
| Fuel tank (L/US gal) | 36/9.5 |
| Oil tank capacity (L/qt) | 3.4/3.6 |

| POWERTRAIN | |
|---|---|
| Drive clutch | pDrive with clickers |
| Driven clutch | QRS |
| Drive sprocket pitch | 73 mm/2.86 in. |

| DRY WEIGHT | |
|---|---|
| Dry weight | 468 lb |

| DIMENSIONS | |
|---|---|
| Overall vehicle length | 3,038 mm/119.6 in. |
| Overall vehicle width | 1,209 – 1,232 – 1,255 mm/47.6 – 48.5 – 49.4 in. |
| Overall vehicle height | 1,267 mm/49.9 in. |
| Ski stance | 1,090 mm/43 in. adjustable |
| Track (Length x Width x Profile) | RipSaw II 2-ply: 137 x 15 x 1.25 in. |

| COLOR |
|---|
| Black |

| SUSPENSION | |
|---|---|
| Front suspension | RAS X |
| Front shock | KYB Pro 40 R EA |
| Front suspension travel | 265 mm/10.4 in. |
| Rear suspension | rMotion™ X |
| Center shock | KYB Pro 40 EA (double-rate springs) |
| Rear shock | KYB Pro 40 EA |
| Rear suspension travel | 292 mm/11.5 in. |

| FEATURES | |
|---|---|
| Platform | REV® Gen4 |
| Skis | Pilot X |
| Seating | Trail performance |
| Handlebar | U-shaped aluminum with J-hooks/ Transparent handguards |
| Riser block height | 90 mm/3.5 in. |
| Starter | Manual |
| Reverse | RER™ |
| Brake system | Brembo† |
| Heated throttle lever/grips | Standard |
| Gauge type | 7.2 in. digital display |
| Windshield | 360 mm/14 in. |
| Runner – Carbide | Round 1/2 – 4 in. |
| Bumpers (front/rear) | Std/Std |

## // FEATURE HIGHLIGHTS

**1 Rotax 600R E-TEC engine**
The Rotax 600R E-TEC engine with second-generation E-TEC technology offers immediate throttle response, crisp acceleration while continuing to set the bar for reliability, and 2-stroke oil and fuel economy.

**2 Competition shock package**
The most robust shock package in the lineup for a race-ready setup.

**3 Heavy-duty reinforcement**
Competition-ready with reinforced rails and rear suspension plus heavy-duty track tensioner, acceleration link rods and arm extension.




RENEGADE X-RS
WITH COMPETITION PACKAGE SHOWN

**4 RS riser**
90 mm height for a more aggressive rider position.

**5 Two-ply RipSaw racing track**
Two-ply for extra durability. Excellent traction in all conditions.

**6 Rack steering system**
Derived from the MXZx race sled, further increases steering precision and straight tracking for a nimble and predictable ride in extreme bumps.

# RENEGADE® X-RS®

A hard-charging, race-inspired machine with the most advanced features and technology.



RENEGADE X-RS
850 E-TEC SHOWN

## // WHAT'S NEW

- REV® Gen5 platform (850 E-TEC® only)
- 10.25" color touchscreen display with BRP Connect available (850 E-TEC only)
- Smart-Shox™ semi-active suspension available with Pilot™ X or Pilot TX skis
- Premium LED headlights

## // PACKAGE HIGHLIGHTS

- Rotax® 850 E-TEC and 900 ACE™ Turbo R engines available
- High-performance KYB† Pro shock package
- 7.8 in. wide LCD display with BRP Connect available (900 ACE Turbo R)
- RAS™ X front suspension
- rMotion™ X rear suspension
- Electric starter
- RS running boards
- pDrive™ clutch
- Forward steering post position (850 E-TEC)
- Rack steering system
- Forward adjustable riser
- Transparent handguards
- Open toe-hold
- Backlit multifunction handlebar controls

| ROTAX ENGINE | 850 E-TEC | 900 ACE TURBO R |
|---|---|---|
| Engine details | Liquid-cooled, two-stroke, eRAVE™ | Liquid-cooled, four-stroke D.O.H.C., dry sump, turbocharged |
| Horsepower | 165 | 180 |
| Cylinders – Displacement | 2 – 849 cc | 3 – 899 cc |
| Bore – Stroke (mm) | 82 – 80.4 | 73 – 69.7 |
| Carburation | E-TEC direct injection with additional booster injectors | EFI |
| Fuel type – Octane | Premium unleaded – 91 | Premium unleaded – 91 |
| Fuel tank (L/US gal) | 36/9.5 | 36/9.5 |
| Oil tank capacity (L/qt) | 3.4/3.6 | 3.3/3.5 |

| POWERTRAIN | | |
|---|---|---|
| Drive clutch<br>Driven clutch | pDrive with clickers<br>QRS Vent | pDrive<br>QRS Vent |
| Drive sprocket pitch | 73 mm/2.86 in. | 73 mm/2.86 in. |

| DRY WEIGHT | | |
|---|---|---|
| Dry weight | 496 lb | 533 lb |

| DIMENSIONS | |
|---|---|
| Overall vehicle length | 3,038 mm/119.6 in. |
| Overall vehicle width | 1,209 – 1,232 – 1,255 mm/47.6 – 48.5 – 49.4 in. |
| Overall vehicle height | 1,267 mm/49.9 in. |
| Ski stance | 1,092 mm/43 in. adjustable |
| Track<br>(Length x Width x Profile) | RipSaw†:<br>137 x 15 x 1.25 in.<br>Ice Ripper† XT:<br>137 x 15 x 1.25 in.<br>137 x 15 x 1.5 in. |

**COLOR**

Platinum Silver / Spartan Red

Black

| SUSPENSION | |
|---|---|
| Front suspension | RAS X |
| Front shock | KYB Pro 36 EA-3 (REV Gen5)<br>KYB Pro 36 EA (REV Gen4)<br>KYB Pro Smart-Shox opt. |
| Front suspension travel | 265 mm/10.4 in. |
| Rear suspension | rMotion X |
| Center shock | KYB Pro 40 EA-3 (REV Gen5)<br>KYB Pro 40 EA (REV Gen4) |
| Rear shock | KYB Pro 40 EA-3 (REV Gen5)<br>KYB Pro 40 EA (REV Gen4)<br>KYB Pro Smart-Shox opt. |
| Rear suspension travel | 292 mm/11.5 in. |

| FEATURES | |
|---|---|
| Platform | REV Gen5 (850 E-TEC only)<br>REV Gen4 |
| Skis | Pilot X<br>Pilot TX (opt. w/ Smart-Shox) |
| Seating | Trail performance (2-stroke engines)<br>Trail with storage (4-stroke engines) |
| Handlebar | U-shaped aluminum with J-hooks/<br>Transparent handguards |
| Riser block height | Adjustable 120 mm/4.7 in. |
| Starter | Electric |
| Reverse | RER™ (850 E-TEC)<br>Electro-mechanical (900 ACE Turbo R) |
| Brake system | Brembo† |
| Heated throttle lever/grips | Standard |
| Gauge type | 7.2 in. digital display<br>7.8 in. wide LCD color (opt. 900 ACE Turbo R)<br>10.25 in. touchscreen (opt. 850 E-TEC) |
| Windshield | Ultra-low (850 E-TEC), Optional (900 ACE Turbo R) |
| Runner – Carbide | Round 1/2 – 4 in. |
| Bumpers (front/rear) | Std/Std |



## // FEATURE HIGHLIGHTS

**1 REV Gen5 trail platform**

A sleek new design that brings a whole new level of refinement, connectivity and good looks to the trails.

**2 Smart-Shox**

An industry-first, Smart-Shox semi-active suspension instantly reads terrain and rider input to automatically dial in your suspension to give you the optimal ride in any conditions.

**3 High-performance KYB Pro shock**

Extreme capability, extreme durability shocks for control in the toughest conditions. Easy adjust-equipped for dialed in compression.




RENEGADE X-RS
850 E-TEC SHOWN

**4 Rack steering system**

Derived from the MXZx race sled, further increases steering precision and straight tracking for a nimble and predictable ride in extreme bumps.

**5 10.25 in. color touchscreen display with BRP Connect**

A high-resolution infotainment system that puts an interactive, informative and customizable experience that's both seamless and simple, right at your fingertips.

**6 RS Running boards**

Designed for aggressive stand-up riding, they are flatter for most of their length, wider and strong. Thicker aluminum sheet, plus front and rear reinforcements to withstand tough landings.

# RENEGADE® X®

High-performance and high-tech features for the most demanding rider.



RENEGADE X
600R E-TEC SHOWN



RENEGADE X
850 E-TEC SHOWN

## // WHAT'S NEW

- REV® Gen5 platform (850 E-TEC® only)
- 10.25" color touchscreen display with BRP Connect available (850 E-TEC only)
- Premium LED headlights

## // PACKAGE HIGHLIGHTS

- Rotax® 850 E-TEC on REV Gen5 platform
- Rotax® 600R E-TEC and 900 ACE™ Turbo R available
- High-performance shock package
- 7.8 in. wide LCD display with BRP Connect available (900 ACE Turbo R)
- RAS™ X front suspension
- rMotion™ X rear suspension
- Electric starter
- pDrive™ clutch
- Forward adjustable riser
- Transparent handguards
- Backlit multifunction handlebar controls

| ROTAX ENGINE | 850 E-TEC | 600R E-TEC | 900 ACE TURBO R |
|---|---|---|---|
| Engine details | Liquid-cooled, two-stroke, eRAVE™ | Liquid-cooled, two-stroke, eRAVE | Liquid-cooled, four-stroke D.O.H.C., dry sump, turbocharged |
| Horsepower | 165 | 125 | 180 |
| Cylinders – Displacement | 2 – 849 cc | 2 – 599.4 cc | 3 – 899 cc |
| Bore – Stroke (mm) | 82 – 80.4 | 72.3 – 73 | 73 – 69.7 |
| Carburation | E-TEC direct injection with additional booster injectors | E-TEC direct injection | EFI |
| Fuel type – Octane | Premium unleaded – 91 | Premium unleaded – 91 | Premium unleaded – 91 |
| Fuel tank (L/US gal) | 36/9.5 | 36/9.5 | 36/9.5 |
| Oil tank capacity (L/qt) | 3.4/3.6 | 3.4/3.6 | 3.3/3.5 |

| POWERTRAIN | | | |
|---|---|---|---|
| Drive clutch<br>Driven clutch | pDrive with clickers<br>QRS Vent | pDrive with clickers<br>QRS | pDrive<br>QRS Vent |
| Drive sprocket pitch | 73 mm/2.86 in. | 73 mm/2.86 in. | 73 mm/2.86 in. |

| DRY WEIGHT | | | |
|---|---|---|---|
| Dry weight | 486 lb | 470 lb | 524 lb |

| DIMENSIONS | |
|---|---|
| Overall vehicle length | 3,038 mm/119.6 in. |
| Overall vehicle width | 1,209 – 1,232 – 1,255 mm/47.6 – 48.5 – 49.4 in. |
| Overall vehicle height | 1,267 mm/49.9 in. |
| Ski stance | 1,090 mm / 43 in. adjustable |
| Track<br>(Length x Width x Profile) | RipSaw†:<br>137 x 15 x 1.25 in.<br>Ice Ripper†† XT:<br>137 x 15 x 1.25 in.<br>137 x 15 x 1.5 in. |

| COLOR |
|---|
| Neo Yellow / Black |
| Black |

| SUSPENSION | |
|---|---|
| Front suspension | RAS X |
| Front shock | HPG† Plus |
| Front suspension travel | 243 mm/9.6 in. |
| Rear suspension | rMotion X |
| Center shock | HPG Plus |
| Rear shock | KYB† Pro 36 EA-3 (REV Gen5)<br>KYB Pro 36 EA (REV Gen4) |
| Rear suspension travel | 292 mm/11.5 in. |

| FEATURES | |
|---|---|
| Platform | REV Gen5 (850 E-TEC only)<br>REV Gen4 |
| Skis | Pilot™ X |
| Seating | Trail performance (2-stroke engines)<br>Trail with storage (4-stroke engines) |
| Handlebar | U-shaped aluminum with J-hooks/<br>Transparent handguards |
| Riser block height | Adjustable-120 mm/4.7 in. |
| Starter | Electric |
| Reverse | RER™ (E-TEC engines)<br>Electro-mechanic (ACE engines) |
| Brake system | Brembo† |
| Heated throttle lever/grips | Standard |
| Gauge type | 7.2 in. digital |
| Windshield | 360 mm/14 in. |
| Runner – Carbide | Round 7/16 – 4 in. |
| Bumpers (front/rear) | Std/Std |

## // FEATURE HIGHLIGHTS

**1 REV Gen5 trail platform**

A sleek new design that brings a whole new level of refinement, connectivity and good looks to the trails.

**2 Rotax 850 E-TEC and 900 ACE Turbo R engines**

Two incredibly powerful and reliable options, offering top performance for the most demanding riders.

**3 Premium shock package**

HPG Plus front and center shocks. KYB Pro 36 EA rear shock featuring compression adjustment with easy-adjust knob. All four shocks are aluminum and rebuildable/revalvable.




RENEGADE X
850 E-TEC SHOWN

**4 rMotion X rear suspension**

Built upon the same principles rMotion suspensions are renowned for, and then some. Completely redesigned for unmatched big-bump absorption and incredible comfort. Longer front arm with exclusive adjustable-angle design fits ideally with RAS X front suspension, creating superior cornering on trail.

**5 10.25 in. color touchscreen display with BRP Connect**

A high-resolution infotainment system that puts an interactive, informative and customizable experience that's both seamless and simple, right at your fingertips.

**6 Three track choices**

Superior performance assured with your choice of factory-installed Ripsaw or studded Ice Ripper tracks.

# RENEGADE® ENDURO™

Adventure-ready with
top-tier technology,
comfort and performance.



RENEGADE ENDURO
900 ACE TURBO SHOWN

## // PACKAGE HIGHLIGHTS

- Five Rotax® engines available
- 7.8 in. wide LCD display with BRP Connect
- rMotion™ X rear suspension with Air Control Suspension (ACS) rear shock
- RAS™ X front suspension
- Visor plug standard
- pDrive™ clutch
- Studded track standard
- Electric starter
- Glove box with 4 L/1 gal of storage
- Heated trail seat with 7 L/1.85 gal of storage
- Medium windshield (17 in.) with air deflectors
- Heavy-duty front bumper
- Pilot™ TX adjustable skis

| ROTAX ENGINE | 850 E-TEC® | 600R E-TEC | 900 ACE™ TURBO R | 900 ACE TURBO | 900 ACE |
|---|---|---|---|---|---|
| Engine details | Liquid-cooled, two-stroke, eRAVE™ | Liquid-cooled, two-stroke, eRAVE | Liquid-cooled, four-stroke D.O.H.C., dry sump, turbocharged | Liquid-cooled, four-stroke D.O.H.C., dry sump, turbocharged | Liquid-cooled, four-stroke D.O.H.C., dry sump |
| Horsepower | 165 | 125 | 180 | 130 | 95 |
| Cylinders – Displacement | 2<br>849 cc | 2<br>599.4 cc | 3<br>899 cc | 3<br>899 cc | 3<br>899 cc |
| Bore – Stroke (mm) | 82 – 80.4 | 72.3 – 73 | 73 – 69.7 | 73 – 69.7 | 73 – 69.7 |
| Carburation | E-TEC direct injection with additional booster injectors | E-TEC direct injection | EFI | EFI | EFI |
| Fuel type<br>Octane | Premium unleaded<br>91 | Premium unleaded<br>91 | Premium unleaded<br>91 | Premium unleaded<br>91 | Regular unleaded<br>87 |
| Fuel tank (L/US gal) | 36/9.5 | 36/9.5 | 36/9.5 | 36/9.5 | 36/9.5 |
| Oil tank capacity (L/qt) | 3.4/3.6 | 3.4/3.6 | 3.3/3.5 | 3.3/3.5 | 3.3/3.5 |
| **POWERTRAIN** | | | | | |
| Drive clutch<br>Driven clutch | pDrive with clickers<br>QRS Vent | pDrive with clickers<br>QRS | pDrive<br>QRS Vent | pDrive<br>QRS Vent | pDrive<br>QRS |
| Drive sprocket pitch | 73 mm/2.86 in. | 73 mm/2.86 in. | 73 mm/2.86 in. | 73 mm/2.86 in. | 73 mm/2.86 in. |
| **DRY WEIGHT** | | | | | |
| Dry weight | 518 lb | 502 lb | 556 lb | 552 lb | 531 lb |

| DIMENSIONS | |
|---|---|
| Overall vehicle length | 3,038 mm/119.6 in. |
| Overall vehicle width | 1,217 mm/47.9 in. |
| Overall vehicle height | 1,331 mm/52.4 in. |
| Ski stance | 1,090 mm/43 in. adjustable |
| Track<br>(Length x Width x Profile) | Ice Ripper† XT:<br>137 x 15 x 1.25 in. |

| SUSPENSION | |
|---|---|
| Front suspension | RAS X |
| Front shock | HPG† |
| Front suspension travel | 235 mm/9.3 in. |
| Rear suspension | rMotion X |
| Center shock | HPG |
| Rear shock | ACS (Air Control Suspension) |
| Rear suspension travel | 276 mm/10.9 in. |

**COLOR**

Black / Neo Yellow

Black

| FEATURES | |
|---|---|
| Platform | REV® Gen4 |
| Skis | Pilot TX |
| Seating | Trail heated with storage |
| Handlebar | U-shaped aluminum with J-hooks |
| Riser block height | 120 mm/4.7 in. |
| Starter | Electric |
| Reverse | RER™ (E-TEC engines) Electro-mechanic (ACE engines) |
| Air radiator | |
| Brake system | Brembo† |
| Heated throttle lever/grips | Standard |
| Gauge type | 7.8 in. wide LCD color display |
| Windshield | 430 mm/17 in. |
| Runner – Carbide | Adjustable blade 1/4 – 4 in. |
| Bumpers (front/rear) | Heavy-duty/Std |



## // FEATURE HIGHLIGHTS

**1 Rotax 850 E-TEC and 900 ACE Turbo R engines**

Two incredibly powerful and reliable options, offering top performance for the most demanding riders.

**2 rMotion X rear suspension with Air Control Shock (ACS)**

rMotion X redefines big-bump capability in the harshest terrain, while improving overall handling thanks to a longer front arm with adjustable-angle design. Combined with ACS and its on-the-fly preload settings, you have the best of both handling and adjustable comfort.

**3 RAS X front suspension**

Flatter cornering and precision handling in all conditions. Developed in tandem with the rMotion X rear suspension to raise the bar in trail snowmobile chassis performance. Wider, adjustable ski stance and +10 mm of suspension stroke maximize stability, capability and comfort.




RENEGADE ENDURO
900 ACE TURBO SHOWN

**4 Standard studded track**

1.25 in. Ice Ripper XT direct from the factory with carbide studs for added grip.

**5 7.8 in. LCD color display with BRP Connect**

Wide-screen full-color display lets riders truly customize their ride from behind the bars. Choose your preferred sled info, and see app-integrated information in a split-screen format with GPS, Bluetooth† music, helmet-to-helmet communication and more.

**6 Pilot TX skis**

Redesigned with a longer front keel to provide more positive ski traction and less darting, this ski lets riders dial in their preferred amount of ski bite.

# RENEGADE® ADRENALINE®

Tight cornering, big bumps, high speed and rough trails—this sled conquers it all.



RENEGADE® ADRENALINE
850 E-TEC SHOWN

## // WHAT'S NEW

- REV® Gen5 platform with LED headlights (850 E-TEC® only)

## // PACKAGE HIGHLIGHTS

- Five Rotax® engines available
- High-quality HPG[1] shock package
- pDrive™ clutch
- rMotion™ X rear suspension
- Electric starter
- Glove box with 4 L/1 gal of storage
- Transparent handguards
- Low windshield (14 in.) with air deflectors
- Pilot™ X skis

| ROTAX ENGINE | 850 E-TEC | 600R E-TEC | 900 ACE™ TURBO R | 900 ACE TURBO | 900 ACE |
|---|---|---|---|---|---|
| Engine details | Liquid-cooled, two-stroke, eRAVE™ | Liquid-cooled, two-stroke, eRAVE | Liquid-cooled, four-stroke D.O.H.C., dry sump, turbocharged | Liquid-cooled, four-stroke D.O.H.C., dry sump, turbocharged | Liquid-cooled, four-stroke D.O.H.C., dry sump |
| Horsepower | 165 | 125 | 180 | 130 | 95 |
| Cylinders – Displacement | 2<br>849 cc | 2<br>599.4 cc | 3<br>899 cc | 3<br>899 cc | 3<br>899 cc |
| Bore – Stroke (mm) | 82 – 80.4 | 72.3 – 73 | 73 – 69.7 | 73 – 69.7 | 73 – 69.7 |
| Carburation | E-TEC direct injection with additional booster injectors | E-TEC direct injection | EFI | EFI | EFI |
| Fuel type<br>Octane | Premium unleaded<br>91 | Premium unleaded<br>91 | Premium unleaded<br>91 | Premium unleaded<br>91 | Regular unleaded<br>87 |
| Fuel tank (L/US gal) | 36/9.5 | 36/9.5 | 36/9.5 | 36/9.5 | 36/9.5 |
| Oil tank capacity (L/qt) | 3.4/3.6 | 3.4/3.6 | 3.3/3.5 | 3.3/3.5 | 3.3/3.5 |

| POWERTRAIN | | | | | |
|---|---|---|---|---|---|
| Drive clutch<br>Driven clutch | pDrive with clickers<br>QRS Vent | pDrive with clickers<br>QRS | pDrive<br>QRS Vent | pDrive<br>QRS Vent | pDrive<br>QRS |
| Drive sprocket pitch | 73 mm/2.86 in. | 73 mm/2.86 in. | 73 mm/2.86 in. | 73 mm/2.86 in. | 73 mm/2.86 in. |

| DRY WEIGHT | | | | | |
|---|---|---|---|---|---|
| Dry weight | 486 lb | 470 lb | 524 lb | 518 lb | 497 lb |

| DIMENSIONS | |
|---|---|
| Overall vehicle length | 3,038 mm/119.6 in. |
| Overall vehicle width | 1,217 mm/47.9 in. |
| Overall vehicle height | 1,267 mm/49.9 in. |
| Ski stance | 1,090 mm/43 in. adjustable |
| Track<br>[Length x Width x Profile] | RipSaw[1]:<br>137 x 15 x 1.25 in. |

| SUSPENSION | |
|---|---|
| Front suspension | RAS™ X |
| Front shock | HPG |
| Front suspension travel | 235 mm/9.3 in. |
| Rear suspension | rMotion X |
| Center shock | HPG |
| Rear shock | HPG |
| Rear suspension travel | 292 mm/11.5 in. |

### COLOR

Neo Yellow / Black

Black

### FEATURES

| | |
|---|---|
| Platform | REV Gen5 (850 E-TEC only)<br>REV Gen4 |
| Skis | Pilot X |
| Seating | Trail performance (2-stroke engines)<br>Trail with storage (4-stroke engines) |
| Handlebar | U-shaped aluminum with J-hooks/ Transparent handguards |
| Riser block height | 120 mm/4.7 in. |
| Starter | Electric |
| Reverse | RER™ (E-TEC engines)<br>Mechanical (ACE engines) |
| Brake system | Brembo[1] |
| Heated throttle lever/grips | Standard |
| Gauge type | 4.5 in. digital display |
| Windshield | 360 mm/14 in. |
| Runner – Carbide | Square 3/8 in. – 4 in. |
| Bumpers (front/rear) | Std/Std |



## // FEATURE HIGHLIGHTS

**1 REV Gen5 trail platform**

A sleek new design that brings a whole new level of refinement, connectivity and good looks to the trails.

**2 Rotax 850 E-TEC and 900 ACE Turbo R engines**

Two incredibly powerful and reliable options, offering top performance for the most demanding riders.

**3 rMotion X rear suspension**

Built upon the same principles rMotion suspensions are renowned for, and then some. Completely redesigned for unmatched big-bump absorption and incredible comfort. Longer front arm with exclusive adjustable-angle design fits ideally with RAS X front suspension, creating superior cornering on trail.




RENEGADE ADRENALINE
850 E-TEC SHOWN

**4 RAS X front suspension**

Flatter cornering and precision handling in all conditions. Developed in tandem with the rMotion X rear suspension to raise the bar in trail snowmobile chassis performance. Wider, adjustable ski stance and +10mm of suspension stroke maximize stability, capability and comfort.

**5 High-quality HPG shock package**

Extremely capable high-pressure gas shocks by KYB[1].

**6 Pilot X skis**

Completely redesigned skis to match flawlessly with the most ride-compliant suspensions in the industry. Offering more positive ski traction and reduced darting for confident performance.

# RENEGADE® SPORT

Value-oriented with exceptional handling, bump capability and light off-trail riding.



RENEGADE SPORT
600 EFI SHOWN

## // WHAT'S NEW

- RAS™ X front suspension

## // PACKAGE HIGHLIGHTS

- Rotax® 600 ACE™ with 420W magneto and 600 EFI engines available
- HPG† rear shock
- 4.5 in. digital display
- SC†–5M rear suspension
- Standard electric start
- Glove box with 4 L/1 gal of storage
- Low windshield (14 in.)
- D.E.S.S.™ key (600 ACE)
- Brembo† brake
- Ergo-step side panels
- U-shaped aluminum handlebar with integrated J-hooks
- Pilot™ 5.7 skis

| ROTAX ENGINE | 600 EFI | 600 ACE |
|---|---|---|
| Engine details | Liquid-cooled, two-stroke | Liquid-cooled, four-stroke D.O.H.C., dry sump |
| Horsepower | 85 | 62 |
| Cylinders – Displacement | 2 – 599.4 cc | 2 – 600 cc |
| Bore – Stroke (mm) | 72.3 – 73 | 73 – 69.7 |
| Carburation | EFI | EFI |
| Fuel type – Octane | Regular unleaded – 87 | Regular unleaded – 87 |
| Fuel tank (L/US gal) | 36/9.5 | 36/9.5 |
| Oil tank capacity (L/qt) | 3.4/3.6 | 2.1/2.2 |

| POWERTRAIN | | |
|---|---|---|
| Drive clutch | pDrive™ | eDrive™ 2 |
| Driven clutch | QRS | QRS |
| Drive sprocket pitch | 73 mm/2.86 in. | 73 mm/2.86 in. |

| DRY WEIGHT | | |
|---|---|---|
| Dry weight | 440 lb | 469 lb |

| DIMENSIONS | |
|---|---|
| Overall vehicle length | 3,038 mm/119.6 in. |
| Overall vehicle width | 1,217 mm/47.9 in. |
| Overall vehicle height | 1,267 mm/49.9 in. |
| Ski stance | 1,090 mm/43 in. adjustable |
| Track (Length x Width x Profile) | Cobra: 137 x 15 x 1.35 in. |

**COLOR**

Neo Yellow / Black

| SUSPENSION | |
|---|---|
| Front suspension | RAS X |
| Front shock | Motion Control |
| Front suspension travel | 235 mm/9.3 in. |
| Rear suspension | SC-5M |
| Center shock | Motion Control |
| Rear shock | HPG |
| Rear suspension travel | 245 mm/9.6 in. |

| FEATURES | |
|---|---|
| Platform | REV® Gen4 |
| Skis | Pilot 5.7 |
| Seating | Trail compact (600 EFI)<br>Trail performance (600 ACE) |
| Handlebar | U-shaped aluminum with J-hooks |
| Riser block height | 120 mm/4.7 in. |
| Starter | Electric |
| Reverse | RER™ (600 EFI)<br>Mechanical (600 ACE) |
| Brake system | Brembo |
| Heated throttle lever/grips | Standard |
| Gauge type | 4.5 in. digital display |
| Windshield | 360 mm/14 in. |
| Runner – Carbide | Square 3/8 in – 4 in. |
| Bumpers (front/rear) | Std/Std |

## // FEATURE HIGHLIGHTS

**1 Rotax 600 ACE and 600 EFI engines**

Two easy-to-own, reliable and fuel-efficient choices. 62 hp* (600 ACE) or 85 hp* (600 EFI) versions ensure great performance and an incredible value.

**2 HPG rear shock**

High-quality KYB† high-pressure gas shock for excellent performance and reliability.

**3 Electric start**

Saves time and energy, adding immense value for the rider.




RENEGADE SPORT
600 EFI SHOWN

**4 Ergo-step side panels**

Design offers natural progression to three natural positions for different cornering styles, including a new, extreme-forward position.

**5 RAS X front suspension**

Flatter cornering and precision handling in all conditions. Wider, adjustable ski stance and +10mm of suspension stroke maximize stability, capability and comfort.

**6 Pilot 5.7 skis**

Delivers outstanding grip and bite in corners with virtually no darting.

# MXZ® X-RS®

A non-compromising race-inspired sled capable of taking on the roughest trails with ease.





MXZ X-RS
850 E-TEC SHOWN

## // WHAT'S NEW

- REV® Gen5 platform (850 E-TEC® only)
- 10.25" color touchscreen display with BRP Connect available (850 E-TEC only)
- Smart-Shox™ semi-active suspension available with Pilot™ X or Pilot TX skis
- KYB† Pro 40R front shocks
- Renforts de rail de suspension

## // PACKAGE HIGHLIGHTS

- Rotax® 850 E-TEC and 600R E-TEC engines
- High-performance KYB† Pro shock package
- RAS™ X front suspension
- rMotion™ X rear suspension
- Electric starter
- RS running boards
- pDrive™ clutch
- Backlit multifunction handlebar controls
- Forward steering post position
- Rack steering system
- Low-profile 90mm riser block
- Transparent handguards
- Open toe-hold
- Pilot X skis

| ROTAX ENGINE | 850 E-TEC | 600R E-TEC |
|---|---|---|
| Engine details | Liquid-cooled, two-stroke, eRAVE™ | Liquid-cooled, two-stroke, eRAVE |
| Horsepower | 165 | 125 |
| Cylinders – Displacement | 2 – 849 cc | 2 – 599.4 cc |
| Bore – Stroke (mm) | 82 – 80.4 | 72.3 – 73 |
| Carburation | E-TEC direct injection with additional booster injectors | E-TEC direct injection |
| Fuel type – Octane | Premium unleaded – 91 | Premium unleaded – 91 |
| Fuel tank (L/US gal) | 36/9.5 | 36/9.5 |
| Oil tank capacity (L/qt) | 3.4/3.6 | 3.4/3.6 |

| POWERTRAIN | | |
|---|---|---|
| Drive clutch<br>Driven clutch | pDrive with clickers<br>QRS Vent | pDrive with clickers<br>QRS |
| Drive sprocket pitch | 73 mm/2.86 in. | 73 mm/2.86 in. |

| DRY WEIGHT | | |
|---|---|---|
| Dry weight | 493 lb | 479 lb |

| DIMENSIONS | |
|---|---|
| Overall vehicle length | 2,925 mm/115.2 in. |
| Overall vehicle width | 1,209 – 1,232 – 1,255 mm/47.6 – 48.5 – 49.4 in. |
| Overall vehicle height | 1,267 mm/49.9 in. |
| Ski stance | 1,090 mm/43 in. adjustable |
| Track<br>(Length x Width x Profile) | RipSaw†:<br>129 x 15 x 1.5 in.<br>Ice Ripper† XT:<br>129 x 15 x 1.5 in. |

| COLOR |
|---|
| Platinum Silver / Spartan Red |
| Black |

| SUSPENSION | |
|---|---|
| Front suspension | RAS X |
| Front shock | KYB Pro 40 R EA-3<br>KYB Pro Smart-Shox (opt.) |
| Front suspension travel | 265 mm/10.4 in. |
| Rear suspension | rMotion X |
| Center shock | KYB Pro 40 R EA-3 |
| Rear shock | KYB Pro 40 R EA-3<br>KYB Pro Smart-Shox (opt.) |
| Rear suspension travel | 292 mm/11.5 in. |

| FEATURES | |
|---|---|
| Platform | REV Gen5 (850 E-TEC only)<br>REV Gen4 |
| Skis | Pilot X<br>Pilot TX (opt. w/ Smart-Shox) |
| Seating | Trail performance |
| Handlebar | U-shaped aluminum with J-hooks/ Transparent handguards |
| Riser block height | 90 mm/3.5 in. |
| Starter | Electric |
| Reverse | RER™ |
| Brake system | Brembo† |
| Heated throttle lever/grips | Standard |
| Gauge type | 7.2 in. digital display |
| Windshield | Optional |
| Runner – Carbide | Round 1/2 – 4 in. |
| Bumpers (front/rear) | Std/Std |



## // FEATURE HIGHLIGHTS

**1 REV Gen5 trail platform**
A sleek new design that brings a whole new level of refinement, connectivity and good looks to the trails.

**2 Smart-Shox**
An industry-first, Smart-Shox semi-active suspension instantly reads terrain and rider input to automatically dial in your suspension to give you the optimal ride in any conditions.

**3 High-performance KYB Pro shock package**
Extreme-capability, extreme-durability shocks for control in the toughest conditions. Easy adjust-equipped for dialed-in compression and/or rebound.




MXZ X-RS
850 E-TEC SHOWN

**4 RS running boards**
Designed for aggressive stand-up riding, they are flatter for most of their length, wider and strong. Thicker aluminum sheet, plus front and rear reinforcements to withstand tough landings.

**5 10.25 in. color touchscreen display with BRP Connect**
A high-resolution infotainment system that puts an interactive, informative and customizable experience that's both seamless and simple, right at your fingertips.

**6 Rack steering system**
Derived from the MXZx race sled, further increases steering precision and straight tracking for a nimble and predictable ride in extreme bumps.

# MXZ® BLIZZARD®

High-tech features and racing
DNA for hard-core trail riders.





MXZ BLIZZARD
850 E-TEC SHOWN

## // WHAT'S NEW

- REV® Gen5 platform with premium LED headlights (850 E-TEC® only)
- KYB† Pro 36 EA-3 front and rear shocks
- Rack steering system
- 7.2 in. digital display
- Forward steering post position

## // PACKAGE HIGHLIGHTS

- Rotax® 850 E-TEC and 600R E-TEC engines
- RAS™ X front suspension
- rMotion™ X rear suspension
- Electric starter
- pDrive™ clutch
- Backlit multifunction handlebar controls
- Low windshield (14 in.) with air deflectors
- Transparent handguards
- Open toe-hold
- Lower 90mm riser

| ROTAX ENGINE | 850 E-TEC | 600R E-TEC |
|---|---|---|
| Engine details | Liquid-cooled, two-stoke, eRAVE™ | Liquid-cooled, two-stroke, eRAVE |
| Horsepower | 165 | 125 |
| Cylinders – Displacement | 2 – 849 cc | 2 – 599.4 cc |
| Bore – Stroke (mm) | 82 – 80.4 | 72.3 – 73 |
| Carburation | E-TEC direct injection with additional booster injectors | E-TEC direct injection |
| Fuel type – Octane | Premium unleaded - 91 | Premium unleaded - 91 |
| Fuel tank (L/US gal) | 36/9.5 | 36/9.5 |
| Oil tank capacity (L/qt) | 3.4/3.6 | 3.4/3.6 |

| POWERTRAIN | | |
|---|---|---|
| Drive clutch<br>Driven clutch | pDrive with clickers<br>QRS Vent | pDrive with clickers<br>QRS |
| Drive sprocket pitch | 73 mm/2.86 in. | 73 mm/2.86 in. |

| DRY WEIGHT | | |
|---|---|---|
| Dry weight | 480 lb | 466 lb |

| DIMENSIONS | |
|---|---|
| Overall vehicle length | 2,925 mm/115.2 in. |
| Overall vehicle width | 1,209 - 1,232 - 1,255 mm/47.6 - 48.5 - 49.4 in. |
| Overall vehicle height | 1,267 mm/49.9 in. |
| Ski stance | 1,090 mm/43 in. adjustable |
| Track<br>(Length x Width x Profile) | RipSaw†:<br>129 x 15 x 1.25 in.<br>Ice Ripper† XT:<br>129 x 15 x 1.25 in. |

| COLOR |
|---|
| Neo Yellow |
| Black |

| SUSPENSION | |
|---|---|
| Front suspension | RAS X |
| Front shock | KYB Pro 36 EA-3 |
| Front suspension travel | 265 mm/10.4 in. |
| Rear suspension | rMotion X |
| Center shock | HPG† Plus |
| Rear shock | KYB Pro 36 EA-3 |
| Rear suspension travel | 292 mm/11.5 in. |

| FEATURES | |
|---|---|
| Platform | REV Gen5 (850 E-TEC only)<br>REV Gen4 |
| Skis | Pilot™ X |
| Seating | Trail performance |
| Handlebar | U-shaped aluminum with J-hooks/<br>Transparent handguards |
| Riser block height | 90 mm/3.5 in. |
| Starter | Electric |
| Reverse | RER™ |
| Brake system | Brembo† |
| Heated throttle lever/grips | Standard |
| Gauge type | 7.2 in. digital display |
| Windshield | 360 mm/14 in. |
| Runner – Carbide | Round 7/16 in – 4 in. |
| Bumpers (front/rear) | Std/Std |

## // FEATURE HIGHLIGHTS

### 1 REV Gen5 trail platform

A sleek new design that brings a whole new level of refinement, connectivity and good looks to the trails.

### 2 Rotax 850 E-TEC and 600R E-TEC engines

Incredible power and unmatched dynamic response with exclusive E-TEC direct-injection technology. Plasma-coated, mono-block cylinders are used for exceptional durability, while the precision of E-TEC injection means you get excellent fuel and oil economy.

### 3 Performance shock package

KYB Pro 36 Easy-Adjust front and rear shocks featuring compression adjustment. HPG Plus center shock. All four shocks are aluminum and rebuildable/revalvable.




MXZ BLIZZARD
850 E-TEC SHOWN

### 4 rMotion X rear suspension

Built upon the same principles rMotion suspensions are renowned for, and then some. Completely redesigned for unmatched big-bump absorption and incredible comfort. Longer front arm with exclusive adjustable angle design ideally mates with RAS X front suspension creating superior cornering on-trail.

### 5 RAS X front suspension

Flatter cornering and precision handling in all conditions. Developed in tandem with the rMotion X rear suspension to raise the bar in trail snowmobile chassis performance. Wider, adjustable ski stance and +10mm of suspension stroke maximize stability, capability and comfort.

### 6 Rack steering system

Derived from the MXZx race sled, further increases steering precision and straight tracking for a nimble and predictable ride in extreme bumps.

# MXZ® SPORT

Dynamic trail performance and value-oriented features.



MXZ SPORT
600 EFI SHOWN

## // WHAT'S NEW

- RAS™ X front suspension

## // PACKAGE HIGHLIGHTS

- Rotax® 600 EFI engine
- 4.5 in. digital display
- SC¹-5M rear suspension
- Electric starter standard
- Low windshield (14 in.)
- U-shaped aluminum handlebar with integrated J-hooks
- Ergo-step side panels

| ROTAX ENGINE | 600 EFI |
|---|---|
| Engine details | Liquid-cooled, two-stroke |
| Horsepower | 85 |
| Cylinders – Displacement | 2 - 599.4 cc |
| Bore – Stroke (mm) | 72.3.7 – 73 |
| Carburation | EFI |
| Fuel type – Octane | Regular unleaded - 87 |
| Fuel tank (L/US gal) | 36/9.5 |
| Oil tank capacity (L/qt) | 3.4/3.6 |

| POWERTRAIN | |
|---|---|
| Drive clutch | pDrive™ |
| Driven clutch | QRS |
| Drive sprocket pitch | 73 mm/2.86 in. |

| DRY WEIGHT | |
|---|---|
| Dry weight | 435 lb |

| DIMENSIONS | |
|---|---|
| Overall vehicle length | 2,925 mm/115.2 in. |
| Overall vehicle width | 1,217 mm/47.9 in. |
| Overall vehicle height | 1,267 mm/49.9 in. |
| Ski stance | 1,090 mm/43 in. adjustable |
| Track (Length x Width x Profile) | RipSaw¹: 129 x 15 x 1.25 in. |

| COLOR |
|---|
| Neo Yellow / Black |

| SUSPENSION | |
|---|---|
| Front suspension | RAS X |
| Front shock | Motion Control |
| Front suspension travel | 235 mm/9.3 in. |
| Rear suspension | SC-5M |
| Center shock | Motion Control |
| Rear shock | Motion Control |
| Rear suspension travel | 245 mm/9.6 in. |

| FEATURES | |
|---|---|
| Platform | REV® Gen4 |
| Skis | Pilot™ 5.7 |
| Seating | Trail compact |
| Handlebar | U-shaped aluminum with J-hooks |
| Riser block height | 120 mm/4.7 in. |
| Starter | Electric |
| Reverse | RER™ |
| Brake system | Brembo¹ |
| Heated throttle lever/grips | Standard |
| Gauge type | 4.5 in. digital display |
| Windshield | 360 mm/14 in. |
| Runner – Carbide | Square 3/8 in. – 4 in. |
| Bumpers (front/rear) | Std/Std |

## // FEATURE HIGHLIGHTS

**1 Rotax 600 EFI engine**
600cc-class fuel-injected engine delivering 85 horsepower and outstanding economy at an incredible value. Design based on the 600R E-TEC® with proven reliability and ease of ownership at its core with an outsized fun factor.

**2 Brembo disc brake**
Fade-resistant, world-renowned stopping power from hydraulic brake. Braided stainless-steel line delivers a direct, solid feel and greater braking efficiency.

**3 SC-5M rear suspension**
Offers great balance of comfort and performance.




MXZ SPORT
600 EFI SHOWN

**4 RAS X front suspension**
Flatter cornering and precision handling in all conditions. Wider, adjustable ski stance and +10mm of suspension stroke maximize stability, capability and comfort.

**5 Pilot 5.7 skis**
Delivers outstanding grip and bite in corners with virtually no darting.

**6 Ergo-step side panels**
Design offers natural progression to three natural positions for different cornering styles, including a new, extreme-forward position.

# MXZ® NEO®

A brand new trail sled with compact ergonomics that gives riders of any age a less intimidating experience with a full-size fun factor.



MXZ NEO SHOWN



MXZ NEO+ SHOWN

## // NEO+ PACKAGE

- Rotax® 600 EFI – 55 engine
- HPG[1] front shocks
- 120 x 15 x 1.25 RipSaw[1] track
- Handguards
- Steering cover
- Premium look

## // PACKAGE HIGHLIGHTS

- REV® Gen4 platform
- Intermediate size
- Rotax 600 EFI – 40 engine
- RAS™ X front suspension
- Neo rear suspension
- Motion control shocks
- 120 x 14 x 1.0 Cobra track
- pDrive™ clutch
- Pilot™ 5.7 skis
- RER™ electronic reverse

| ROTAX ENGINE | 600 EFI – 55 | 600 EFI – 40 |
|---|---|---|
| Engine details | Liquid-cooled, two-stoke | Liquid-cooled, two-stoke |
| Horsepower | 55 | 40 |
| Cylinders – Displacement | 2 – 599.4 cc | 2 – 599.4 cc |
| Bore – Stroke (mm) | 72.3 – 73 | 72.3 – 73 |
| Carburation | EFI | EFI |
| Fuel type – Octane | Regular unleaded - 87 | Regular unleaded - 87 |
| Fuel tank (L/US gal) | 36/9.5 | 36/9.5 |
| Oil tank capacity (L/qt) | 3.4/3.6 | 3.4/3.6 |

| POWERTRAIN | | |
|---|---|---|
| Drive clutch<br>Driven clutch | pDrive<br>QRS Lite | pDrive<br>QRS Lite |
| Drive sprocket pitch | 73 mm/2.86 in. | 73 mm/2.86 in. |

| DRY WEIGHT | | |
|---|---|---|
| Dry weight | 404 lb | 412 lb (Neo+) |

| DIMENSIONS | |
|---|---|
| Overall vehicle length | 2,880 mm/113.4 in. (Neo) |
| Overall vehicle width | 1,157 to 1,202 mm/45.6 to 47.3 in. |
| Overall vehicle height | 1,060 mm/41.7 in. |
| Ski stance | 1,000 mm/39 in. adjustable |
| Track<br>(Length x Width x Profile) | Cobra (Neo):<br>120 x 14 x 1.0 in.<br>RipSaw (Neo+):<br>120 x 15 x 1.25 in. |

## COLOR

Neo Yellow / Catalyst Grey (Neo)

Neo Yellow / Black (Neo+)

| SUSPENSION | |
|---|---|
| Front suspension | RAS X |
| Front shock | Motion Control |
| Front suspension travel | 175 mm/6.9 in. |
| Rear suspension | Neo |
| Center shock | Torsion spring |
| Rear shock | Motion Control |
| Rear suspension travel | 212 mm/8.3 in. |

| FEATURES | |
|---|---|
| Platform | REV Gen4 |
| Skis | Pilot 5.7 |
| Seating | Trail ultra-compact |
| Handlebar | Narrow standard with J-hooks/ Handguards |
| Riser block height | 90 mm/3.5 in. |
| Starter | Electric |
| Reverse | RER |
| Brake system | Brembo[1] |
| Heated throttle lever/grips | Standard |
| Gauge type | 4.5 in. digital display |
| Windshield | Optional |
| Runner – Carbide | Square 3/8 in – 4 in. (Opt.) |
| Bumpers (front/rear) | Std/Std |

## // FEATURE HIGHLIGHTS



MXZ NEO+ SHOWN

### 1 REV® Gen4 Neo trail platform

The MXZ Neo brings newcomers and experienced riders alike an outsized fun-factor on the trail. A high level of control and a peppy attitude bring big value to a compact frame.

### 2 Compact Ergonomics

Makes the vehicle easier to control and less intimidating. Includes lower vehicle height, smaller seat, lower handlebars, narrow handlebar grips and a shorter deplacement throttle lever.

### 3 600 EFI - 40 & 55 engines

Plenty of horsepower kick for a variety of experience levels and a truly high degree of reliability and ease of use with this electronic fuel injection two-stroke. Standard with electric start.

# MXZ® 120/200

Now, there's a new way to share the fun and excitement with the whole family.



MXZ 120
SHOWN



MXZ 200
SHOWN

## // PACKAGE HIGHLIGHTS

- 120cc or 200cc 4-stroke engine
- A-arm front suspension with hydraulic twin tube shocks
- Sliderail rear suspension
- Tether switch
- Handlebar grips with handwarmers

| ENGINE | 200 | 120 |
|---|---|---|
| Engine details | Air cooled, four-stroke | Air cooled, four-stroke |
| Horsepower | 9 | 6.5 |
| Cylinders – Displacement | 1 – 192 cc | 1 – 123 cc |
| Bore – Stroke (mm) | 70 – 50 | 56 – 50 |
| Carburation | Carburetor | Carburetor |
| Fuel type – Octane | Regular unleaded - 87 | Regular unleaded - 87 |
| Fuel tank (L/US gal) | 8.3/2.2 | 1.9/0.5 |
| Oil tank capacity (L/qt) | 0.55/0.15 | 0.55/0.15 |

| POWERTRAIN | | |
|---|---|---|
| Drive clutch<br>Driven clutch | CVT System | Centrifugal |
| Drive sprocket pitch | 66 mm/2.59 in. | 66 mm/2.59 in. |

| DRY WEIGHT | | |
|---|---|---|
| Dry weight | 217 lb | 170 lb |

| DIMENSIONS | | |
|---|---|---|
| Overall vehicle length | 1,854 mm/73 in. | 2,134 mm/84 in. |
| Overall vehicle width | 914 mm/36 in. | 914 mm/36 in. |
| Overall vehicle height | 864 mm/34 in. | 864 mm/34 in. |
| Ski stance | 775 mm/30.5 in. adjustable | 775 mm/30.5 in. adjustable |
| Track<br>(Length x Width x Profile) | Cobra:<br>93 x 10 x 1.0 in. | Cobra:<br>67 x 10 x 0.75 in. |

| COLOR |
|---|
| Neo Yellow |

| SUSPENSION | |
|---|---|
| Front suspension | A-arms |
| Front shock | Hydraulic twin-tube |
| Front suspension travel | 102 mm/4.5 in. |
| Rear suspension | Neo |
| Center shock | Slide rail, adjustable torsion spring |
| Rear suspension travel | 203 mm/8.5 in. (200)<br>102 mm/4.5 in. (120) |

| FEATURES | |
|---|---|
| Platform | Youth |
| Starter | Electric (200)<br>Manual (120) |
| Brake system | Hydraulic (200)<br>Adjustable band (120) |
| Heated throttle lever/grips | Standard |
| Windshield | Low |
| Bumpers (front/rear) | Youth/Youth |





# GRAND TOURING LIMITED

The ultimate in 2-up trail comfort and technology with dynamic engine options.



GRAND TOURING LIMITED
900 ACE TURBO SHOWN



GRAND TOURING LIMITED
900 ACE TURBO R W/ LIMITED PACKAGE SHOWN

## // PACKAGE HIGHLIGHTS

- Three Rotax® engines available: 900 ACE™ Turbo R, 900 ACE Turbo, 900 ACE
- Luxury Package available: Includes 7.8 in. wide LCD display with BRP Connect, premium Platinum Silver color and studded track
- RAS™ X front suspension
- rMotion™ X rear suspension with Air Control Suspension (ACS)
- Premium Protection: 23 in. ultra-high windshield, side panel wind deflectors, rear snow deflector and running boards with small openings
- Large rear LinQ® cargo box with 62 L/16.1 gal of storage
- Premium heated 2-up seat with heated passenger handholds and air deflectors
- Heated boot plug
- Heated visor outlets for driver and passenger
- pDrive™ clutch
- Electro-mechanical reverse
- Ergo-step side panels
- SilentDrive™ system
- Forward adjustable riser
- Heavy-duty rear bumper
- Glove box with 4 L/1 gal of storage
- Backlit multifunction handlebar controls
- Pivoting mirrors

| ROTAX ENGINE | 900 ACE TURBO R | 900 ACE TURBO | 900 ACE |
|---|---|---|---|
| Engine details | Liquid-cooled, four-stroke D.O.H.C., dry sump, turbocharged | Liquid-cooled, four-stroke D.O.H.C., dry sump, turbocharged | Liquid-cooled, four-stroke D.O.H.C., dry sump |
| Horsepower | 180 | 130 | 95 |
| Cylinders – Displacement | 3 – 899 cc | 3 – 899 cc | 3 – 899 cc |
| Bore – Stroke (mm) | 73 – 69.7 | 73 – 69.7 | 73 – 69.7 |
| Carburation | EFI | EFI | EFI |
| Fuel type – Octane | Premium unleaded – 91 | Premium unleaded – 91 | Regular unleaded – 87 |
| Fuel tank (L/US gal) | 36/9.5 | 36/9.5 | 36/9.5 |
| Oil tank capacity (L/qt) | 3.3/3.5 | 3.3/3.5 | 3.3/3.5 |

| POWERTRAIN | | | |
|---|---|---|---|
| Drive clutch<br>Driven clutch | pDrive<br>QRS Vent | pDrive<br>QRS Vent | pDrive<br>QSR |
| Drive sprocket pitch | 36 mm/1.43 in. | 36 mm/1.43 in. | 36 mm/1.43 in. |

| DRY WEIGHT | | | |
|---|---|---|---|
| Dry weight | 590 lb | 586 lb | 559 lb |

| DIMENSIONS | |
|---|---|
| Overall vehicle length | 3,127 mm/123.1 in. |
| Overall vehicle width | 1,217 mm/47.9 in. |
| Overall vehicle height | 1,513 mm/59.6 in. |
| Ski stance | 1,090 mm/43 in. adjustable |
| Track<br>(Length x Width x Profile) | Silent Track II:<br>137 x 15 x 1.25 in.<br>Studded Silent Track II:<br>137 x 15 x 1.25 in. (Luxury Package) |

| COLOR | |
|---|---|
| Platinum Silver / Spartan Red (Luxury Package) | |
| Black | |

| SUSPENSION | |
|---|---|
| Front suspension | RAS X |
| Front shock | HPG† |
| Front suspension travel | 225 mm/8.9 in. |
| Rear suspension | rMotion X |
| Center shock | HPG |
| Rear shock | ACS (Air Control Suspension) |
| Rear suspension travel | 276 mm/10.9 in. |

| FEATURES | |
|---|---|
| Platform | REV® Gen4 |
| Skis | Pilot™ 5.7 SL |
| Seating | 2-up heated |
| Handlebar | Standard |
| Riser block height | Adjustable–120 mm/4.7 in. |
| Starter | Electric |
| Reverse | Electro-mechanic |
| Air radiator | Fan (Turbo engines only) |
| Brake system | Brembo† |
| Heated throttle lever/grips | Standard (driver and passenger) |
| Gauge type | 7.2 in. digital display<br>7.8 in. wide LCD color display (Luxury Package) |
| Windshield | 585 mm/23 in. with mirrors |
| Runner – Carbide | Round 1/2 – 4 in. |
| Bumpers (front/rear) | Std/Heavy-duty |



## // FEATURE HIGHLIGHTS

### 1 Rotax 900 ACE Turbo R engine

Now the most powerful 4-stroke engine ever offered in a Ski-Doo. Ferocious instant acceleration and top speed through bigger fuel injectors, increased boost and optimized intake and exhaust systems. The new cable activated iTC throttle better matches a performance rider's profile while offering three driving modes.

### 2 Premium Protection

23 in. ultra-high windshield, side panel wind deflectors, rear snow deflector and running boards with small openings all make for the most comfortable ride possible.

### 3 Luxury Package

Three premium features consisting of a distinctive Platinum Silver and Spartan Red colorway, 7.8-in wide LCD display with BRP Connect and a studded Silent Track II.




GRAND TOURING LIMITED
900 ACE TURBO R W/ LIMITED PACKAGE SHOWN

### 4 rMotion X rear suspension with Air Control Shock (ACS)

rMotion X redefines big-bump capability in the harshest terrain, while improving overall handling thanks to a longer front arm with adjustable-angle design. Combined with ACS and its on-the-fly preload settings, you have the best of both handling and adjustable comfort.

### 5 Large cargo box

Hard-top weather-resistant LinQ box adds 62 L (16.1 gal) of storage on the tunnel.

### 6 Heated 2-up seat

Premium 2-up heated seat with backrest, including handholds.

# GRAND TOURING SPORT

Trail comfort and 2-up features with precision handling and savvy style.



GRAND TOURING SPORT
900 ACE SHOWN

## // WHAT'S NEW

- RAS™ X front suspension

## // PACKAGE HIGHLIGHTS

- Rotax® 900 ACE™ and 600 ACE engines with 420W magneto
- 23 in. ultra-high windshield with side deflectors
- 2-up seat with heated passenger handholds and air deflectors
- SC¹-5M rear suspension
- Heated driver's visor power outlet
- pDrive™ clutch (900 ACE)
- Pivoting mirrors
- Reversible throttle lever (thumb or finger activated)
- Brembo¹ brake
- iTC™ Engine mapping modes (Standard, Sport or ECO™)
- Pilot™ 5.7 SL skis
- Mechanical reverse
- SilentDrive™ system

| ROTAX ENGINE | 900 ACE | 600 ACE |
|---|---|---|
| Engine details | Liquid-cooled, four-stroke D.O.H.C., dry sump | Liquid-cooled, four-stroke D.O.H.C., dry sump |
| Horsepower | 95 | 62 |
| Cylinders – Displacement | 3 – 899 cc | 2 – 600 cc |
| Bore – Stroke (mm) | 73 – 69.7 | 73 – 69.7 |
| Carburation | EFI | EFI |
| Fuel type – Octane | Regular unleaded – 87 | Regular unleaded – 87 |
| Fuel tank (L/US gal) | 36/9.5 | 36/9.5 |
| Oil tank capacity (L/qt) | 3.3/3.5 | 2.1/2.2 |

| POWERTRAIN | | |
|---|---|---|
| Drive clutch | pDrive | eDrive™ 2 |
| Driven clutch | QRS | QRS |
| Drive sprocket pitch | 36 mm/1.43 in. | 36 mm/1.43 in. |

| DRY WEIGHT | | |
|---|---|---|
| Dry weight | 530 lb | 509 lb |

| DIMENSIONS | |
|---|---|
| Overall vehicle length | 3,127 mm/123.1 in. |
| Overall vehicle width | 1,217 mm/47.9 in. |
| Overall vehicle height | 1,513 mm/59.6 in. |
| Ski stance | 1,090 mm/43 in. adjustable |
| Track (Length x Width x Profile) | Silent Track II: 137 x 15 x 1.25 in. |

| COLOR |
|---|
| Black / Neo Yellow |

| SUSPENSION | |
|---|---|
| Front suspension | RAS™ X |
| Front shock | Motion Control |
| Front suspension travel | 225 mm/8.9 in. |
| Rear suspension | SC-5M |
| Center shock | Motion Control |
| Rear shock | HPG¹ |
| Rear suspension travel | 245 mm/9.6 in. |

| FEATURES | |
|---|---|
| Platform | REV® Gen4 |
| Skis | Pilot 5.7 SL |
| Seating | 2-up |
| Handlebar | Standard |
| Riser block height | 120 mm/4.7 in. |
| Starter | Electric |
| Reverse | Mechanical |
| Brake system | Brembo |
| Heated throttle lever/grips | Standard (driver and passenger) |
| Gauge type | 4.5 in. digital display |
| Windshield | 585 mm/23 in. with mirrors |
| Runner – Carbide | Round 1/2 – 4 in. |
| Bumpers (front/rear) | Std/Std |

## // FEATURE HIGHLIGHTS

**1 Rotax 900 ACE and 600 ACE engines**
Two reliable, low-maintenance choices with proven ACE technology and Intelligent Throttle Control (iTC) with three driving modes. The 62 hp* 600 ACE is the industry's fuel-economy leader**, and the 95 hp* 900 ACE ensures lively performance at an incredible value.

**2 RAS X front suspension**
Flatter cornering and precision handling in all conditions. Wider, adjustable ski stance and +10mm of suspension stroke maximize stability, capability and comfort.

**3 HPG rear shock**
High-quality KYB¹ high-pressure gas shock for excellent performance and reliability.




GRAND TOURING SPORT
900 ACE SHOWN

**4 SilentDrive system**
Track drivers, interior track design and suspension geometry designed to reduce sound to the rider that are clearly noticeable as well as up to 70% less vibration to the rider's feet.

**5 Ultra-high windshield**
Sculpted to offer improved rider and passenger wind deflection.

**6 2-up seat**
Comfortable 2-up seat with backrest, including handholds.

# EXPEDITION® XTREME™

The high-performance sport-utility sled with capability to go just about anywhere.



EXPEDITION XTREME
900 ACE TURBO R SHOWN

## // WHAT'S NEW

- Two Rotax® engines available: 850 E-TEC® and 900 ACE™ Turbo R

## // PACKAGE HIGHLIGHTS

- KYB† Pro 36 Easy-Adjust rear shock
- HPG™ Plus front shocks
- RAS™ X crossover front suspension
- SC†-5U articulating rear suspension with locking mechanism (no tool required)
- 20 in. wide Multi-LinQ® plate with 125 lb/56.7 kg cargo capacity
- Air radiator with fan
- Deep-snow running boards with large openings
- pDrive™ clutch with clickers
- Low handlebar strap
- Flexible handguards
- Electric start
- Pilot™ DS 3 skis
- Adjustable ski stance

| ROTAX ENGINE | 850 E-TEC | 900 ACE TURBO R |
|---|---|---|
| Engine details | Liquid-cooled, two-stroke, eRAVE™ | Liquid-cooled, four-stroke D.O.H.C., dry sump, turbocharged |
| Horsepower | 165 | 180 |
| Cylinders – Displacement | 2 – 849 cc | 3 – 899 cc |
| Bore – Stroke (mm) | 82 – 80.4 | 73 – 69.7 |
| Carburation | E-TEC direct injection with additional booster injectors | EFI |
| Fuel type – Octane | Premium unleaded – 91 | Premium unleaded – 91 |
| Fuel tank (L/US gal) | 42/11.1 | 42/11.1 |
| Oil tank capacity (L/qt) | 3.4/3.6 | 3.3/3.5 |

| POWERTRAIN | | |
|---|---|---|
| Drive clutch<br>Driven clutch | pDrive with clickers<br>QRS Vent Plus | pDrive<br>QRS Vent |
| Drive sprocket pitch | 73 mm/2.86 in. | 73 mm/2.86 in. |

| DRY WEIGHT | | |
|---|---|---|
| Dry weight | 596 lb | 634 lb |

| DIMENSIONS | |
|---|---|
| Overall vehicle length | 3,293 mm/129.6 in. |
| Overall vehicle width | 1,140 to 1,180 mm/44.9 to 46.5 in. |
| Overall vehicle height | 1,280 mm/50.4 in. |
| Ski stance | 1,000 mm/39 in. adjustable |
| Track (Length x Width x Profile) | Cobra WT: 154 x 20 x 1.8 in. |

| COLOR |
|---|
| Black / Spartan Red |

| SUSPENSION | |
|---|---|
| Front suspension | RAS X |
| Front shock | HPG Plus |
| Front suspension travel | 220 mm/8.7 in. |
| Rear suspension | SC-5U |
| Center shock | HPG Plus |
| Rear shock | KYB Pro 36 |
| Rear suspension travel | 239 mm/9.4 in. |

| FEATURES | |
|---|---|
| Platform | REV® Gen4 |
| Skis | Pilot DS 3 |
| Seating | 1-up modular with rear seat storage |
| Handlebar | Standard with J-hooks/Grab handle |
| Riser block height | 145 mm/5.7 in. |
| Starter | Electric |
| Reverse | RER™ (850 E-TEC)<br>Electro-mechanic (Turbo R) |
| Air radiator | High-efficiency w/ fan (4-stroke)<br>Fan (2-stroke) |
| Brake system | Brembo† |
| Heated throttle lever/grips | Standard |
| Gauge type | 4.5 in. digital display |
| Windshield | 360 mm/14 in. |
| Runner – Carbide | Square 3/8 in. – 4 in. |
| Bumpers (front/rear) | Heavy-duty/Std |

## // FEATURE HIGHLIGHTS

**1 Rotax 900 ACE Turbo R engine**

Now the most powerful engine ever offered in a Ski-Doo. Ferocious instant acceleration and top speed through bigger fuel injectors, increased boost and optimized intake and exhaust systems. The new cable activated iTC™ throttle better matches a performance rider's profile while offering three driving modes.

**2 Rotax 850 E-TEC engine**

Next generation of the most advanced direct-injection two-stroke engine technology. Designed for reliability and durability with proven four-stroke and long-lasting automotive technologies.

**3 Like a Summit® with a 20 in. wide track**

The REV Gen4 platform paired with the RAS X crossover front suspension allows effortless maneuvers in deep snow, while the 20 x 154 x 1.8 in. Cobra track provides incredible flotation and traction.




EXPEDITION XTREME
900 ACE TURBO R SHOWN

**4 KYB Pro 36 piggyback rear shock with compression adjustment**

Extreme-capability, extreme-durability shocks with compression adjustment for optimized control in the toughest conditions. Lightweight aluminum and rebuildable/revalvable.

**5 SC-5U articulating rear suspension**

The articulated rail maximizes deep-snow traction in reverse, and its toolless locking mechanism is ideal for towing.

**6 Multi-LinQ plate**

Standard LinQ adaptable storage. Fits 16- and 20-inch-wide LinQ accessories to maximize accessory options. Up to 125 lb (56.7 kg) of cargo capacity.

# EXPEDITION® SE

The utmost touring sport-utility vehicle with an incredible list of work and luxury features.



EXPEDITION SE
900 ACE TURBO SHOWN



EXPEDITION SE
850 E-TEC SHOWN

## // WHAT'S NEW

- Four Rotax® engines available: 850 E-TEC®, 900 ACE™ Turbo R, 900 ACE Turbo and 900 ACE

## // PACKAGE HIGHLIGHTS

- Air Control Suspension (ACS) rear shock
- RAS™ X crossover front suspension
- 7.8 in. wide LCD display with BRP Connect available
- SC¹-5U articulating rear suspension with locking mechanism (no tool required)
- 20 in. wide Multi-LinQ® plate with 125 lb/56.7 kg cargo capacity
- Air radiator with fan
- Deep-snow running boards with large openings
- Removable passenger seat with heated grips
- Ultra-large LinQ utility cargo box with 135 L/35.7 US gal of storage
- Hitch receiver with 1,500 lb/680 kg towing capacity when equiped with an HD rear bumper. (1,200 lb/544 kg std.)
- High-capacity battery
- Forward adjustable riser
- Easy-shift transmission (H-L-N) with RER™ electronic reverse (2-stroke)/electro-mechanical reverse (4-stroke)
- 23 in. ultra-high windshield with side deflectors
- Pivoting mirrors
- Pilot™ 7.4 skis
- Heated driver's visor power outlet
- pDrive™ clutch
- Backlit multifunction handlebar controls

| ROTAX ENGINE | 850 E-TEC | 900 ACE TURBO R | 900 ACE TURBO | 900 ACE |
|---|---|---|---|---|
| Engine details | Liquid-cooled, two-stroke, eRAVE™ | Liquid-cooled, four-stroke D.O.H.C., dry sump, turbocharged | Liquid-cooled, four-stroke D.O.H.C., dry sump, turbocharged | Liquid-cooled, four-stroke D.O.H.C., dry sump |
| Horsepower | 165 | 180 | 130 | 95 |
| Cylinders – Displacement | 2 - 849 cc | 3 – 899 cc | 3 – 899 cc | 3 – 899 cc |
| Bore – Stroke (mm) | 82 – 80.4 | 73 – 69.7 | 73 – 69.7 | 73 – 69.7 |
| Carburation | E-TEC direct injection with additional booster injectors | EFI | EFI | EFI |
| Fuel type – Octane | Premium unleaded – 91 | Premium unleaded – 91 | Premium unleaded – 91 | Regular unleaded – 87 |
| Fuel tank (L/US gal) | 42/11.1 | 42/11.1 | 42/11.1 | 42/11.1 |
| Oil tank capacity (L/qt) | 3.4/3.6 | 3.3/3.5 | 3.3/3.5 | 3.3/3.5 |
| **POWERTRAIN** | | | | |
| Drive clutch<br>Driven clutch | pDrive with clickers<br>QRS Vent Plus | pDrive<br>QRS Vent | pDrive<br>QRS Vent | pDrive<br>QRS |
| Drive sprocket pitch | 73 mm/2.86 in. | 73 mm/2.86 in. | 73 mm/2.86 in. | 73 mm/2.86 in. |
| **DRY WEIGHT** | | | | |
| Dry weight | 654 lb | 694 lb | 689 lb | 666 lb |

| DIMENSIONS | |
|---|---|
| Overall vehicle length | 3,256 mm/128.2 in. |
| Overall vehicle width | 1,200 to 1,240 mm/47.7 to 48.8 in. |
| Overall vehicle height | 1,513 mm/59.6 in. |
| Ski stance | 1,000 mm/39 in. adjustable |
| Track (Length x Width x Profile) | Silent Cobra WT: 154 x 20 x 1.5 in.<br>Silent Ice Cobra WT: 154 x 20 x 1.5 in. opt.<br>Silent Cobra WT: 154 x 20 x 1.8 in. opt. |

| SUSPENSION | |
|---|---|
| Front suspension | RAS X |
| Front shock | HPG† |
| Front suspension travel | 220 mm/8.7 in. |
| Rear suspension | SC-5U |
| Center shock | HPG |
| Rear shock | ACS (Air Control Suspension) |
| Rear suspension travel | 239 mm/9.4 in. |

| COLOR |
|---|
| Catalyst Grey / Orange Crush |
| Black |

| FEATURES | |
|---|---|
| Platform | REV® Gen4 |
| Skis | Pilot 7.4 |
| Seating | 2-up modular with underseat storage |
| Handlebar | Standard with J-hooks/Grab handle |
| Riser block height | Adjustable- 120 mm/4.7 in. |
| Starter | Electric |
| Reverse | RER (2-stroke) Electro-mechanic (ACE engines) |
| Air radiator | High-efficiency w/ fan (4-stroke) Fan (2-stroke) |
| Brake system | Brembo† |
| Heated throttle lever/grips | Standard (driver and passenger) |
| Gauge type | 7.2 in. wide digital 7.8 in. wide LCD color (opt. on ACE engines) |
| Windshield | 585 mm/23 in. with mirrors |
| Runner – Carbide | Square 3/8 in. – 4 in. |
| Bumpers (front/ rear) | Heavy-duty/Hitch receiver |

## // FEATURE HIGHLIGHTS

**1 Rotax 900 ACE Turbo R engine**

Now the most powerful 4-stroke engine ever offered in a Ski-Doo. Ferocious instant acceleration and top speed through bigger fuel injectors, increased boost and optimized intake and exhaust systems. The new cable activated iTC throttle better matches a performance rider's profile while offering three driving modes.

**2 SC-5U rear suspension with Air Control Shock (ACS)**

The articulated rail maximizes deep-snow traction in reverse, and its toolless locking mechanism is ideal for towing. Combined with ACS and its on-the-fly preload settings, you have the best of both utility functions and adjustable comfort.

**3 Ultra-large LinQ utility cargo box**

135 L/35.7 US gal of lockable, weather-resistant storage capacity. Incorporated hatchet and saw holder, plus attachment points for bungees and two 16 in. LinQ positions on top for expandable accessory use.




EXPEDITION SE
850 E-TEC SHOWN

**4 Multi-LinQ plate**

Standard LinQ adaptable storage. Fits 16- and 20-inch-wide LinQ accessories to maximize accessory options. Up to 125 lb (56.7 kg) of cargo capacity.

**5 Large panoramic 7.8 in. wide LCD color display available**

Wide-screen full-color display lets riders truly customize their ride from behind the bars. Choose your preferred sled info, and see app integrated-information in a split-screen format with GPS, Bluetooth† music, helmet-to-helmet communication and more.

**6 Three utility track choices**

Choose from three different factory-installed Silent Cobra tracks, with or without carbine studs for extra traction in icy conditions.

# EXPEDITION® LE

A hybrid touring sport-utility vehicle with premium features for off-trail exploration and on-trail cruises.



EXPEDITION LE
900 ACE TURBO SHOWN

## // WHAT'S NEW

- Four Rotax® engines available: 600R E-TEC®, 900 ACE™ Turbo R, 900 ACE Turbo and 900 ACE engines
- Available with 20 in. or 24 in. track options

## // PACKAGE HIGHLIGHTS

- 20 in. wide Multi-LinQ® plate with 125 lb/56.7 kg cargo capacity
- RAS™ X crossover front suspension
- SC¹-5U articulating rear suspension with locking mechanism (no tool required)
- Air radiator with fan
- Deep-snow running boards with large openings
- Removable passenger seat with heated grips
- Hitch receiver with 1,500 lb/680 kg towing capacity when equiped with an HD rear bumper. (1,200 lb/544 kg std.)
- High-capacity battery
- Easy-shift transmission (H-L-N) with RER™ electronic reverse (2-stroke)/electro-mechanical reverse (4-stroke)
- 23 in. ultra-high windshield with side deflectors
- Pivoting mirrors
- Pilot™ 7.4 skis
- Heated driver's visor power outlet
- Low handlebar strap
- pDrive™ clutch

| ROTAX ENGINE | 600R E-TEC | 900 ACE TURBO R | 900 ACE TURBO | 900 ACE |
|---|---|---|---|---|
| Engine details | Liquid-cooled, two-stroke, eRAVE™ | Liquid-cooled, four-stroke D.O.H.C., dry sump, turbocharged | Liquid-cooled, four-stroke D.O.H.C., dry sump, turbocharged | Liquid-cooled, four-stroke D.O.H.C., dry sump |
| Horsepower | 125 | 180 | 130 | 95 |
| Cylinders – Displacement | 2 – 599.4 cc | 3 – 899 cc | 3 – 899 cc | 3 – 899 cc |
| Bore – Stroke (mm) | 72.3 – 73 | 73 – 69.7 | 73 – 69.7 | 73 – 69.7 |
| Carburation | E-TEC direct injection | EFI | EFI | EFI |
| Fuel type – Octane | Premium unleaded – 91 | Premium unleaded – 91 | Premium unleaded – 91 | Regular unleaded – 87 |
| Fuel tank (L/US gal) | 42/11.1 | 42/11.1 | 42/11.1 | 42/11.1 |
| Oil tank capacity (L/qt) | 3.4/3.6 | 3.3/3.5 | 3.3/3.5 | 3.3/3.5 |

| POWERTRAIN | | | | |
|---|---|---|---|---|
| Drive clutch<br>Driven clutch | pDrive with clickers<br>QRS Vent | pDrive<br>QRS Vent | pDrive<br>QRS Vent | pDrive<br>QRS |
| Drive sprocket pitch | 73 mm/2.86 in. | 73 mm/2.86 in. | 73 mm/2.86 in. | 73 mm/2.86 in. |

| DRY WEIGHT | | | | |
|---|---|---|---|---|
| Dry weight 20 in. track | 617 lb | 670 lb | 666 lb | 640 lb |
| Dry weight 24 in. track | 626 lb | 681 lb | 676 lb | 650 lb |

| DIMENSIONS | |
|---|---|
| Overall vehicle length | 3,256 mm/128.2 in. |
| Overall vehicle width | 1,200 to 1,240 mm/47.7 to 48.8 in. |
| Overall vehicle height | 1,513 mm/59.6 in. |
| Ski stance | 1,000 mm/39 in. adjustable |
| Track (Length x Width x Profile) | Silent Cobra WT: 154 x 20 x 1.5 in. 154 x 24 x 1.5 in. |

| SUSPENSION | |
|---|---|
| Front suspension | RAS X |
| Front shock | HPG† |
| Front suspension travel | 220 mm/8.7 in. |
| Rear suspension | SC-5U |
| Center shock | HPG |
| Rear shock | HPG |
| Rear suspension travel | 239 mm/9.4 in. |

| COLOR |
|---|
| Arctic Desert / Black |
| Black |

| FEATURES | |
|---|---|
| Platform | REV® Gen4 |
| Skis | Pilot 7.4 |
| Seating | 2-up modular with underseat storage |
| Handlebar | Standard with J-hooks/Grab handle |
| Riser block height | 145 mm/5.7 in. |
| Starter | Electric |
| Reverse | RER (600R E-TEC) Electro-mechanic (ACE engines) |
| Air radiator | High-efficiency w/ fan (4-stroke) Fan (2-stroke) |
| Brake system | Brembo† |
| Heated throttle lever/grips | Standard (driver and passenger) |
| Gauge type | 4.5 in. digital display |
| Windshield | 585 mm/23 in. with mirrors |
| Runner – Carbide | Square 3/8 in. – 4 in. |
| Bumpers (front/ rear) | Heavy-duty/Hitch receiver |



## // FEATURE HIGHLIGHTS

### 1 Rotax 900 ACE Turbo R engine

Now the most powerful 4-stroke engine ever offered in a Ski-Doo. Ferocious instant acceleration and top speed through bigger fuel injectors, increased boost and optimized intake and exhaust systems. The new cable activated iTC throttle better matches a performance rider's profile while offering three driving modes.

### 2 Utility 2-up seat

The ideal combination of comfort and convenience. Driver and passenger seat offering comfort and maneuverability for the driver, and convenience and protection for the passenger. Shielded and heated passenger hand grips.

### 3 SC-5U articulating rear suspension

The articulated rail maximizes deep-snow traction in reverse, and its toolless locking mechanism is ideal for towing.




EXPEDITION LE
900 ACE TURBO SHOWN

### 4 RAS X crossover front suspension

An updated version of our RAS X trail front end for capability on- and off-trail. Light steering feel optimized for crossover usage with adjustable stance.

### 5 20 in. and 24 in. wide tracks available

A wide range of options built to offer superb flotation and meet any towing needs.

### 6 Multi-LinQ plate

Standard LinQ adaptable storage. Fits 16- and 20-inch-wide LinQ accessories to maximize accessory options. Up to 125 lb (56.7 kg) of cargo capacity.

# EXPEDITION® SPORT

Ultra-responsive chassis for on- or off-trail rides and extensive array of sport-utility and 2-up features.



EXPEDITION SPORT
900 ACE SHOWN

## // WHAT'S NEW

- Three Rotax® engines available: 900 ACE™, 600 ACE and 600 EFI

## // PACKAGE HIGHLIGHTS

- pDrive™ clutch
- RAS™ X crossover front suspension
- SC[1]-5U articulating rear suspension with locking mechanism (no tool required)
- Brembo[1] brake
- 420W magneto available with Rotax® ACE engines
- Heavy duty rear bumper with tongue-type hitch
- Air radiator with fan and engine oil cooler
- 2-up seat with removable LinQ® passenger backrest and handholds
- Deep-snow running boards with large openings
- Standard with 2 sets of LinQ attachment points
- Adjustable ski stance
- Pilot™ DS 2 skis

| ROTAX ENGINE | 600 EFI | 900 ACE | 600 ACE |
|---|---|---|---|
| Engine details | Liquid-cooled, two-stroke | Liquid-cooled, four-stroke D.O.H.C., dry sump | Liquid-cooled, four-stroke D.O.H.C., dry sump |
| Horsepower | 85 | 95 | 62 |
| Cylinders – Displacement | 2 – 599.4 cc | 3 – 899 cc | 2 – 600.0 cc |
| Bore – Stroke (mm) | 72.3 – 73 | 73 – 69.7 | 73 – 69.7 |
| Carburation | EFI | EFI | EFI |
| Fuel type – Octane | Regular unleaded – 87 | Regular unleaded – 87 | Regular unleaded – 87 |
| Fuel tank (L/US gal) | 36/9.5 | 36/9.5 | 36/9.5 |
| Oil tank capacity (L/qt) | 3.4/3.6 | 3.3/3.5 | 2.1/2.2 |

| POWERTRAIN | | | |
|---|---|---|---|
| Drive clutch<br>Driven clutch | pDrive<br>QRS | pDrive<br>QRS | eDrive™ 2<br>QRS |
| Drive sprocket pitch | 73 mm/2.86 in. | 73 mm/2.86 in. | 73 mm/2.86 in. |

| DRY WEIGHT | | | |
|---|---|---|---|
| Dry weight | 504 lb | 578 lb | 532 lb |

| DIMENSIONS | |
|---|---|
| Overall vehicle length | 3,309 mm/130.3 in. |
| Overall vehicle width | 1,140 to 1,180 mm/44.9 to 46.5 in. |
| Overall vehicle height | 1,513 mm/59.6 in. |
| Ski stance | 1,000 mm/39 in. adjustable |
| Track<br>(Length x Width x Profile) | Charger:<br>154 x 16 x 1.5 in. |

| COLOR |
|---|
| Black / Neo Yellow |

| SUSPENSION | |
|---|---|
| Front suspension | RAS X |
| Front shock | Motion Control |
| Front suspension travel | 210 mm/8.3 in. |
| Rear suspension | SC-5U |
| Center shock | Motion Control |
| Rear shock | HPG[1] |
| Rear suspension travel | 239 mm/9.4 in. |

| FEATURES | |
|---|---|
| Platform | REV® Gen4 |
| Skis | Pilot DS 2 |
| Seating | 2-up |
| Handlebar | Standard with J-hooks |
| Riser block height | 145 mm/5.7 in. |
| Starter | Electric |
| Reverse | RER™ (600 EFI)<br>Mechanical<br>(ACE engines) |
| Air radiator | Fan (4-stroke only) |
| Brake system | Brembo |
| Heated throttle lever/grips | Standard (driver only) |
| Gauge type | 4.5 in. digital display |
| Windshield | 585 mm/23 in. |
| Runner – Carbide | Square 3/8 in. – 4 in. |
| Bumpers (front/rear) | Std/Heavy Duty<br>with tongue-type hitch |

## // FEATURE HIGHLIGHTS

**1 Three engine choices**
This versatile model benefits from three reliable, easy-to-own and fuel-efficient engine choices with the right power for any rider.

**2 Modular 2-up seat**
Easily remove or install the passenger backrest and handholds with the LinQ system.

**3 RAS X crossover front suspension**
An updated version of our RAS X trail front end for capability on- and off-trail. Light steering feel optimized for crossover usage with adjustable stance.




EXPEDITION SPORT
900 ACE SHOWN

**4 Air radiator with fan**
Extra cooling capacity when pulling heavy load, in low-snow conditions or at low speed.

**5 Deep-snow running boards**
Massive, strategically shaped openings keep the boards clear. A tall extruded edge adds stiffness and has aggressive boot grips.

**6 SC-5U articulating rear suspension**
The articulated rail maximizes deep-snow traction in reverse, and its toolless locking mechanism is ideal for towing.

# TUNDRA™ LT

Great off-trail and deep-snow performance with light-utility capability.



TUNDRA LT
600 ACE SHOWN

## // WHAT'S NEW

- Painted tunnel

## // PACKAGE HIGHLIGHTS

- Rotax® 600 EFI and 600 ACE™ engine with 650W magneto available
- HPG[1] rear shock
- LTS telescopic front suspension
- SC[1]-5U articulating rear suspension with locking mechanism (no tool required)
- Brembo[1] brake
- Heavy-duty rear bumper with tongue-type hitch
- Air radiator with fan
- Standard electric start
- Deep-snow running boards with large openings
- Standard with two sets of LinQ® attachment points
- Pilot™ DS 2 skis
- Low handlebar strap

| ROTAX ENGINE | 600 EFI | 600 ACE |
|---|---|---|
| Engine details | Liquid-cooled, two-stroke | Liquid-cooled, four-stroke D.O.H.C., dry sump |
| Horsepower | 85 | 62 |
| Cylinders – Displacement | 2 – 599.4 cc | 2 – 600 cc |
| Bore – Stroke (mm) | 72.3 – 73 | 73 – 69.7 |
| Carburation | EFI | EFI |
| Fuel type – Octane | Regular unleaded – 87 | Regular unleaded – 87 |
| Fuel tank (L/US gal) | 36/9.5 | 36/9.5 |
| Oil tank capacity (L/qt) | 3.4/3.6 | 2.1/2.2 |

| POWERTRAIN | | |
|---|---|---|
| Drive clutch | pDrive™ | eDrive™ 2 |
| Driven clutch | QRS | QRS |
| Drive sprocket pitch | 73 mm/2.86 in. | 73 mm/2.86 in. |

| DRY WEIGHT | | |
|---|---|---|
| Dry weight | 491 lb | 515 lb |

| DIMENSIONS | |
|---|---|
| Overall vehicle length | 3,259 mm/129.3 in. |
| Overall vehicle width | 994 mm/39.1 in. |
| Overall vehicle height | 1,513 mm/59.6 in. |
| Ski stance | 813 mm/32 in. |
| Track (Length x Width x Profile) | Charger: 154 x 16 x 1.5 in. |

| COLOR |
|---|
| Black |

| SUSPENSION | |
|---|---|
| Front suspension | LTS |
| Front shock | Motion Control |
| Front suspension travel | 150 mm/5.9 in. |
| Rear suspension | SC-5U |
| Center shock | Motion Control |
| Rear shock | HPG |
| Rear suspension travel | 239 mm/9.4 in. |

| FEATURES | |
|---|---|
| Platform | REV® Gen4 |
| Skis | Pilot DS 2 |
| Seating | Short 2-up |
| Handlebar | Standard with J-hooks/ Grab handle |
| Riser block height | 145 mm/5.7 in. |
| Starter | Electric |
| Reverse | RER™ (600 EFI) Mechanical (600 ACE) |
| Air radiator | Fan |
| Brake system | Brembo |
| Heated throttle lever/grips | Standard |
| Gauge type | 4.5 in. digital display |
| Windshield | 430 mm/17 in. |
| Runner – Carbide | Square 3/8 in. – 4 in. |
| Bumpers (front/rear) | Std/Heavy-duty with tongue-type hitch |

## // FEATURE HIGHLIGHTS

**1 Rotax 600 ACE and 600 EFI engines**
Two easy-to-own, reliable and fuel-efficient choices. 62 hp* (600 ACE) or 85 hp* (600 EFI) versions ensure great performance and an incredible value.

**2 154 in. track length**
Provides extra flotation and traction when riding in deep-snow.

**3 LTS front suspension**
Industry-exclusive telescopic front suspension enables a large, flat belly pan for exceptional deep-snow flotation.




TUNDRA LT
600 ACE SHOWN

**4 Air radiator with fan**
Extra cooling capacity when pulling heavy load, in low-snow conditions or at low speed.

**5 SC-5U articulating rear suspension**
The articulated rail maximizes deep-snow traction in reverse, and its toolless locking mechanism is ideal for towing.

**6 Heavy-duty rear bumper**
For extra protection and extreme utility.

# TUNDRA™ SPORT

Economical, nimble and fun light-utility vehicle.



TUNDRA SPORT
600 ACE SHOWN

## // PACKAGE HIGHLIGHTS

- Rotax® 600 EFI and 600 ACE™ engine with 650W magneto available
- HPG† rear shock
- LTS telescopic front suspension
- cMotion™ rear suspension
- Brembo† brake
- Heavy-duty rear bumper
- Air radiator with fan (600 ACE only)
- Standard electric start
- Deep-snow running boards with large openings
- Standard with two sets of LinQ® attachment points
- Pilot™ DS 2 skis

| ROTAX ENGINE | 600 EFI | 600 ACE |
|---|---|---|
| Engine details | Liquid-cooled, two-stroke | Liquid-cooled, four-stroke D.O.H.C., dry sump |
| Horsepower | 85 | 62 |
| Cylinders – Displacement | 2 – 599.4 cc | 2 – 600 cc |
| Bore – Stroke (mm) | 72.3 – 73 | 73 – 69.7 |
| Carburation | EFI | EFI |
| Fuel type – Octane | Regular unleaded – 87 | Regular unleaded – 87 |
| Fuel tank (L/US gal) | 36/9.5 | 36/9.5 |
| Oil tank capacity (L/qt) | 3.4/3.6 | 2.1/2.2 |

| POWERTRAIN | | |
|---|---|---|
| Drive clutch | pDrive™ | eDrive™ 2 |
| Driven clutch | QRS | QRS |
| Drive sprocket pitch | 73 mm/2.86 in. | 73 mm/2.86 in. |

| DRY WEIGHT | | |
|---|---|---|
| Dry weight | 466 lb | 486 lb |

| DIMENSIONS | |
|---|---|
| Overall vehicle length | 3,110 mm/122.4 in. |
| Overall vehicle width | 994 mm/39.1 in. |
| Overall vehicle height | 1,369 mm/53.9 in. |
| Ski stance | 813 mm/32 in. |
| Track (Length x Width x Profile) | Cobra: 146 x 16 x 1.6 in. |

| COLOR |
|---|
| Neo Yellow / Black |

| SUSPENSION | |
|---|---|
| Front suspension | LTS |
| Front shock | Motion Control |
| Front suspension travel | 150 mm/5.9 in. |
| Rear suspension | cMotion |
| Center shock | Motion Control |
| Rear shock | HPG |
| Rear suspension travel | 245 mm/9.6 in. |

| FEATURES | |
|---|---|
| Platform | REV® Gen4 |
| Skis | Pilot DS 2 |
| Seating | Short 2-up |
| Handlebar | Standard with J-hooks/ Grab handle |
| Riser block height | 145 mm/5.7 in. |
| Starter | Electric |
| Reverse | RER™ (600 EFI) Mechanical (600 ACE) |
| Air radiator | Fan (600 ACE only) |
| Brake system | Brembo |
| Heated throttle lever/grips | Standard |
| Gauge type | 4.5 in. digital display |
| Windshield | 430 mm/17 in. |
| Runner – Carbide | Square 3/8 in. – 4 in. |
| Bumpers (front/rear) | Std/Heavy-duty |

## // FEATURE HIGHLIGHTS

**1 Rotax 600 ACE and 600 EFI engines**
Two easy-to-own, reliable and fuel-efficient choices. 62 hp* (600 ACE) or 85 hp* (600 EFI) versions ensure great performance and an incredible value.

**2 146 in. track length**
Outstanding versatility on rough trails or in deep snow.

**3 LTS front suspension**
Industry-exclusive telescopic front suspension enables a large, flat belly pan for exceptional deep-snow flotation.




TUNDRA SPORT
600 ACE SHOWN

**4 Air radiator with fan (600 ACE only)**
Extra cooling capacity when pulling heavy load, in low-snow conditions or at low speed.

**5 cMotion rear suspension**
Crossover-specific suspension uses best principles of the rMotion™ trail and tMotion™ mountain skids for confident cornering and agile boondocking.

**6 Heavy-duty rear bumper**
For extra protection and extreme utility.

# SKANDIC® SE

New spring-only package with premium utility features for ultimate off-trail traction and flotation.





SKANDIC SE
900 ACE SHOWN

## // WHAT'S NEW

- Available with five 20 in. or 24 in. track options
- Ultra large LinQ® utility cargo box with 135 L/35.7 US gal of storage
- Heated driver's visor power outlet
- 7.2 in. digital display
- Pilot™ 7.4 skis w/ liners
- HPG† center and rear shocks

## // PACKAGE HIGHLIGHTS

- Tow Rotax® engines available: 600R E-TEC® and 900™ ACE engines
- Multi-LinQ plate with 125 lb/56 kg cargo capacity
- LTS telescopic front suspension
- SC†-5U articulating rear suspension with locking mechanism (no tool required)
- Removable passenger seat with grips
- 23 in. Ultra-high windshield with side deflectors
- Air radiator with fan
- Standard electric start
- Deep-snow running boards with large openings
- Easy Shift transmission (H-L-N) with RER™ electronic reverse (2 stroke) / electro-mechanical reverse (4 stroke)
- Pivoting mirrors
- pDrive™ clutch
- Low handlebar strap

| ROTAX ENGINE | 600R E-TEC | 900 ACE |
|---|---|---|
| Engine details | Liquid-cooled, two-stroke, eRAVE™ | Liquid-cooled, four-stroke D.O.H.C., dry sump |
| Horsepower | 125 | 95 |
| Cylinders – Displacement | 2 – 599.4 cc | 3 – 899 cc |
| Bore – Stroke (mm) | 72.3 – 73 | 73 – 69.7 |
| Carburation | E-TEC direct injection | EFI |
| Fuel type – Octane | Premium unleaded – 91 | Regular unleaded – 87 |
| Fuel tank (L/US gal) | 42/11.1 | 42/11.1 |
| Oil tank capacity (L/qt) | 3.4/3.6 | 3.3/3.5 |

| POWERTRAIN | | |
|---|---|---|
| Drive clutch<br>Driven clutch | pDrive with clickers<br>QRS | pDrive<br>QRS |
| Drive sprocket pitch | 73 mm/2.86 in. | 73 mm/2.86 in. |

| DRY WEIGHT | | |
|---|---|---|
| Dry weight 20 in track | 632 lb | 656 lb |
| Dry weight 24 in track | 669 lb | 693 lb |

| DIMENSIONS | |
|---|---|
| Overall vehicle length | 3,222 mm/126.9 in. |
| Overall vehicle width | 1,089 mm/42.8 in. |
| Overall vehicle height | 1,513 mm/59.6 in. |
| Ski stance | 889 mm/35 in. |
| Track (Length x Width x Profile) | Silent Cobra WT: 154 x 20 x 1.5 in.<br>Silent Cobra WT: 154 x 20 x 1.8 in.<br>Silent Ice Cobra WT: 154 x 20 x 1.5 in.<br><br>Silent Cobra SWT: 154 x 24 x 1.5 in. opt.<br>Silent Ice Cobra SWT: 154 x 24 x 1.5 in. opt. |

| COLOR |
|---|
| Catalyst Grey / Orange Crush |
| Black |

| SUSPENSION | |
|---|---|
| Front suspension | LTS |
| Front shock | Motion Control |
| Front suspension travel | 150 mm/5.9 in. |
| Rear suspension | SC-5U |
| Center shock | HPG |
| Rear shock | HPG |
| Rear suspension travel | 239 mm/9.4 in. |

| FEATURES | |
|---|---|
| Platform | REV® Gen4 |
| Skis | Pilot 7.4 w/ liners |
| Seating | 2-up modular with underseat storage |
| Handlebar | Standard with J-hooks/Grab handle |
| Riser block height | 145 mm/5.7 in. |
| Starter | Electric |
| Reverse | RER (2-stroke)<br>Electro-mechanic (ACE engines) |
| Air radiator | High-efficiency w/ fan (4-stroke)<br>Fan (2-stroke) |
| Brake system | Brembo† |
| Heated throttle lever/grips | Standard (driver only) |
| Gauge type | 7.2 in. digital display |
| Windshield | 585 mm/23 in. with mirrors |
| Runner – Carbide | Square 3/8 – 4 in. |
| Bumpers (front/rear) | Full wrap-around/Hitch receiver |



## // FEATURE HIGHLIGHTS

**1 Multi-LinQ plate**

Standard LinQ adaptable storage. Fits 16- and 20-inch-wide LinQ accessories to maximize accessory options. Up to 125 lb (56.7 kg) of cargo capacity.

**2 Ultra large LinQ utility cargo box**

135 L/35.7 US gal of lockable, weather resistant storage capacity. Incorporated hatchet and saw holder, plus attachment points for bungees and two 16 in. LinQ positions on top for expandable accessory use.

**3 LTS front suspension**

Industry-exclusive telescopic front suspension enables a large, flat belly pan for exceptional deep-snow flotation.




SKANDIC SE
900 ACE SHOWN

**4 Ski liners**

Added flotation for extreme capability when your day takes you into the deep stuff.

**5 20 in. and 24 in. wide tracks available**

A wide range of options built to offer superb flotation and meet any towing needs.

**6 SC-5U articulating rear suspension**

The articulated rail maximizes deep-snow traction in reverse, and its toolless locking mechanism is ideal for towing.

# SKANDIC® LE

Additional in-season options for hardworking off-trail performance and towing capacity.



SKANDIC LE
600 EFI SHOWN



SKANDIC LE
900 ACE SHOWN

## // WHAT'S NEW

- Available with 20 in. or 24 in. track options

## // PACKAGE HIGHLIGHTS

- Four Rotax® engines available: 600R E-TEC®, 900 ACE™, 600 ACE and 600 EFI engines
- HPG† rear shock
- Multi-LinQ plate with 125 lb/56.7 kg cargo capacity
- LTS telescopic front suspension
- SC†-5U articulating rear suspension with locking mechanism (no tool required)
- Removable passenger seat with grips
- 23 in. ultra-high windshield with side deflectors
- Hitch receiver with 1,500 lb/680 kg towing capacity when equiped with an HD rear bumper. (1,200 lb/544 kg std.)
- Air radiator with fan
- Standard electric start
- Deep-snow running boards with large openings
- Easy-shift transmission (H-L-N) with RER™ electronic reverse (2-stroke)/electro-mechanical reverse (4-stroke)
- Pivoting mirrors
- pDrive™ clutch
- Low handlebar strap
- Pilot™ 7.4 skis

| ROTAX ENGINE | 600R E-TEC | 600 EFI | 900 ACE | 600 ACE |
|---|---|---|---|---|
| Engine details | Liquid-cooled, two-stroke, eRAVE™ | Liquid-cooled, two-stroke | Liquid-cooled, four-stroke D.O.H.C., dry sump | Liquid-cooled, four-stroke D.O.H.C., dry sump |
| Horsepower | 125 | 85 | 95 | 62 |
| Cylinders – Displacement | 2 599.4 cc | 2 599.4 cc | 3 899 cc | 2 600 cc |
| Bore – Stroke (mm) | 72.3 – 73 | 72.3 – 73 | 73 – 69.7 | 73 – 69.7 |
| Carburation | E-TEC direct injection | EFI | EFI | EFI |
| Fuel type Octane | Premium unleaded 91 | Regular unleaded 87 | Regular unleaded 87 | Regular unleaded 87 |
| Fuel tank (L/US gal) | 42/11.1 | 42/11.1 | 42/11.1 | 42/11.1 |
| Oil tank capacity (L/qt) | 3.4/3.6 | 3.4/3.6 | 3.3/3.5 | 2.1/2.2 |

| POWERTRAIN | | | | |
|---|---|---|---|---|
| Drive clutch Driven clutch | pDrive with clicker QRS | pDrive QRS | pDrive QRS | eDrive™ 2 QRS |
| Drive sprocket pitch | 73 mm/2.86 in. | 73 mm/2.86 in. | 73 mm/2.86 in. | 73 mm/2.86 in. |

| DRY WEIGHT | | | | |
|---|---|---|---|---|
| Dry weight 20 in track | 596 lb | 575 lb | 620 lb | 698 lb |
| Dry weight 24 in track | 633 lb | | 657 lb | |

| DIMENSIONS | |
|---|---|
| Overall vehicle length | 3,222 mm/126.9 in. |
| Overall vehicle width | 1,089 mm/42.8 in. |
| Overall vehicle height | 1,513 mm/59.6 in. |
| Ski stance | 889 mm/35 in. |
| Track (Length x Width x Profile) | Silent Cobra WT: 154 x 20 x 1.5 in.<br>Silent Cobra SWT: 154 x 24 x 1.5 in. (opt. 900 ACE and 600R) |

| SUSPENSION | |
|---|---|
| Front suspension | LTS |
| Front shock | Motion Control |
| Front suspension travel | 150 mm/5.9 in. |
| Rear suspension | SC-5U |
| Center shock | Motion Control |
| Rear shock | HPG |
| Rear suspension travel | 239 mm/9.4 in. |

| COLOR |
|---|
| Arctic Desert / Black |
| Black |

| FEATURES | |
|---|---|
| Platform | REV® Gen4 |
| Skis | Pilot 7.4 |
| Seating | 2-up modular with underseat storage |
| Handlebar | Standard with J-hooks/ Grab handle |
| Riser block height | 145 mm/5.7 in. |
| Starter | Electric |
| Reverse | RER (2-stroke) Electro-mechanic (ACE engines) |
| Air radiator | High-efficiency w/ fan (4-stroke) Fan (2-stroke) |
| Brake system | Brembo† |
| Heated throttle lever/grips | Standard (driver only) |
| Gauge type | 4.5 in. digital display |
| Windshield | 585 mm/23 in. with mirrors |
| Runner – Carbide | Square 3/8 in. – 14 in. |
| Bumpers (front/rear) | Heavy Duty/ Hitch receiver |



## // FEATURE HIGHLIGHTS

**1 Multi-LinQ plate**

Standard LinQ adaptable storage. Fits 16- and 20-inch-wide LinQ accessories to maximize accessory options. Up to 125 lb (56.7 kg) of cargo capacity.

**2 Skandic 2-up seat**

The ideal combination of comfort and convenience. Driver and passenger seat offering comfort and maneuverability for the driver, and convenience for the passenger.

**3 LTS front suspension**

Industry-exclusive telescopic front suspension enables a large, flat belly pan for exceptional deep-snow flotation.




SKANDIC LE
900 ACE SHOWN

**4 Four engine options**

This versatile model benefits from four reliable and easy-to-own engine choices. Powerful 4- and 2-stroke options ensure the right match for any rider.

**5 20 in. and 24 in. wide tracks available**

A wide range of options built to offer superb flotation and meet any towing needs.

**6 SC-5U articulating rear suspension**

The articulated rail maximizes deep-snow traction in reverse, and its toolless locking mechanism is ideal for towing.

# SKANDIC® SPORT

The best 20 in. utility value in snowmobiling.



SKANDIC SPORT
600 EFI SHOWN

## // PACKAGE HIGHLIGHTS

- Rotax® 600 EFI engine
- HPG† rear shock
- LTS telescopic front suspension
- SC†-5U articulating rear suspension with locking mechanism (no tool required)
- 1-up modular with rear seat storage
- Medium (17 in.) windshield with air deflectors
- Standard electric start
- Deep-snow running boards with large openings
- RER™ electronic reverse
- pDrive™ clutch with slider shoes

| ROTAX ENGINE | 600 EFI |
|---|---|
| Engine details | Liquid-cooled, two-stroke |
| Horsepower | 85 |
| Cylinders – Displacement | 2 – 599.4 cc |
| Bore – Stroke (mm) | 72.3 – 73 |
| Carburation | EFI |
| Fuel type – Octane | Regular unleaded – 87 |
| Fuel tank (L/US gal) | 42/11.1 |
| Oil tank capacity (L/qt) | 3.4/3.6 |

| POWERTRAIN | |
|---|---|
| Drive clutch | pDrive |
| Driven clutch | QRS |
| Drive sprocket pitch | 73 mm/2.86 in. |

| DRY WEIGHT | |
|---|---|
| Dry weight | 520 lb |

| DIMENSIONS | |
|---|---|
| Overall vehicle length | 3,259 mm/129.3 in. |
| Overall vehicle width | 1,089 mm/42.8 in. |
| Overall vehicle height | 1,369 mm/53.9 in. |
| Ski stance | 889 mm/35 in. |
| Track (Length x Width x Profile) | Utility WT 154 x 20 x 1.25 in. |

| COLOR |
|---|
| Black / Neo Yellow |

| SUSPENSION | |
|---|---|
| Front suspension | LTS |
| Front shock | Motion Control |
| Front suspension travel | 150 mm/5.9 in. |
| Rear suspension | SC-5U |
| Center shock | Motion Control |
| Rear shock | HPG |
| Rear suspension travel | 239 mm/9.4 in. |

| FEATURES | |
|---|---|
| Platform | REV® Gen4 |
| Skis | Pilot™ 7.4 |
| Seating | 1-up modular with rear seat storage |
| Handlebar | Standard with J-hooks |
| Riser block height | 145 mm/5.7 in. |
| Starter | Electric |
| Reverse | RER |
| Brake system | Brembo† |
| Heated throttle lever/grips | Standard |
| Gauge type | 4.5 in. digital display |
| Windshield | 430 mm/17 in. |
| Runner – Carbide | Square 3/8 in. – 4 in. |
| Bumpers (front/rear) | Std/Std |

## // FEATURE HIGHLIGHTS

**1 Rotax 600 EFI engine**
600cc-class fuel-injected engine delivering 85 horsepower and outstanding economy at an incredible value. Design based on the 600R E-TEC® with proven reliability and ease of ownership at its core with an outsized fun factor.

**2 Utility 1-up seat**
Big comfort with premium ride quality feel. Storage compartment behind the seat.

**3 LTS front suspension**
Industry-exclusive telescopic front suspension enables a large, flat belly pan for exceptional deep-snow flotation.




SKANDIC SPORT
600 EFI SHOWN

**4 Pilot 7.4 skis**
Designed to provide better reverse capability, more floatation off trail and more positive steering on trail and while hauling loads.

**5 20 in. wide track**
Superb flotation and towing capability.

**6 SC-5U articulating rear suspension**
The articulated rail maximizes deep-snow traction in reverse, and its toolless locking mechanism is ideal for towing.

# COMPARATIVE CHART

| SPECIFICATIONS | | DEEP-SNOW | | | | | | CROSSOVER | | | | | | | | | |
|---|---|---|---|---|---|---|---|---|---|---|---|---|---|---|---|---|---|
| | | SUMMIT | | | | | FREERIDE | BACKCOUNTRY | | BACKCOUNTRY | | | RENEGADE | | | | |
| | | | | | | NEW | | | | | | | | | | | |
| | |  X WITH EXPERT PACKAGE |  X |  EDGE |  SP |  NEO |  FREERIDE |  X-RS | |  X |  BACKCOUNTRY |  SPORT |  X-RS WITH COMPETITION PACKAGE |  X-RS |  X |  ENDURO |  ADRENALINE |  SPORT |
| COLOR | | Platinum Silver / Manta Green (painted) Timeless Black (painted) | Catalyst Grey / Spartan Red Timeless Black (painted) | Catalyst Grey / Neo Yellow Timeless Black (painted) | Catalyst Grey / Neo Yellow Timeless Black (painted) | Neo Yellow / Catalyst Grey (Neo) Neo Yellow / Black (Neo+) | Timeless Black / Spartan Red (painted) | *ULTIMATE* Platinum Silver / Manta Green *ULTIMATE* Black | | Catalyst Grey / Spartan Red Timeless Black | Catalyst Grey / Neo Yellow Timeless Black | Black / Neo Yellow | Black | Platinum Silver / Spartan Red Black | Neo Yellow / Black Black | Black / Neo Yellow Black | Neo Yellow / Black Black | Neo Yellow / Black |
| FEATURES | *Platform* | REV Gen5 | REV Gen5 | REV Gen5 | REV Gen5 | REV Gen4 | REV Gen5 | REV Gen4 | | REV Gen4 | REV Gen4 | REV Gen4 | REV Gen4 | REV Gen5 (850 E-TEC only) REV Gen4 | REV Gen5 (850 E-TEC only) REV Gen4 | REV Gen4 | REV Gen5 (850 E-TEC only) REV Gen4 | REV Gen4 |
| | *Skis* | Pilot DS 4 | Pilot DS 3 | Pilot DS 3 | Pilot DS 3 | Pilot DS 2 | Pilot DS 3 | Pilot DS 2 | | Pilot DS 2 | Pilot DS 2 | Pilot DS 2 | Pilot X | Pilot X Pilot TX (opt. w/ Smart-Shox) | Pilot X | Pilot TX | Pilot X | Pilot 5.7 |
| | *Seating* | Deep-snow ultra-compact and lightweight | Deep-snow compact and lightweight | Deep-snow compact and lightweight | Deep-snow | Deep-snow compact and lightweight | Deep-snow compact and lightweight | Trail performance | | Trail performance | Trail performance | Trail compact | Trail performance | Trail performance (2-stroke engines) Trail with storage (4-stroke engines) | Trail performance (2-stroke engines) Trail with storage (4-stroke engines) | Trail heated with storage | Trail performance (2-stroke engines) Trail with storage (4 -stroke engines) | Trail compact (600 EFI) Trail performance (600 ACE) |
| | *Handlebar* | Tapered with J-hooks/ Grab handle | Tapered with J-hooks/ Grab handle | Tapered U-shaped aluminum with J-hooks/ Low grab handle | Tapered with J-hooks/ Grab handle | Narrow standard with J-hooks Grab handle (Neo+) | Tapered U-shaped aluminum with J-hooks/ Low grab handle | U-shaped aluminum with J-hooks/ Transparent handguards | | U-shaped aluminum with J-hooks/ Transparent handguards | U-shaped aluminum with J-hooks/ Transparent handguards | U-shaped aluminum with J-hooks | U-shaped aluminum with J-hooks/ Transparent handguards | U-shaped aluminum with J-hooks/ Transparent handguards | U-shaped aluminum with J-hooks/ Transparent handguards | U-shaped aluminum with J-hooks | U-shaped aluminum with J-hooks/ Transparent handguards | U-shaped aluminum with J-hooks |
| | *Starter* | SHOT | SHOT, Electric (opt. select models), Manual (opt. select models) | SHOT | Electric, SHOT (opt.), Manual (opt. select models) | Electric | 850 E-TEC: SHOT, Electric (opt. Select models) 850 E-TEC Turbo R: SHOT | Electric, SHOT (opt. select configurations) | | Electric, SHOT (opt. select configurations) | Electric | Electric | Manual | Electric | Electric | Electric | Electric | Electric |
| | *Reverse* | RER | RER | RER | RER | RER | RER | RER | | RER | RER | RER | RER | RER (850 E-TEC) Electro-mechanical (900 ACE Turbo R) | RER (E-TEC engines) Electro-mechanic (ACE engines) | RER (E-TEC engines) Electro-mechanic (ACE engines) | RER™ (E-TEC engines) Mechanical (ACE engines) | RER (600 EFI) Mechanical (600 ACE) |
| | *Windshield height (in.)* | Optional | Optional | Optional | Optional | Optional | Optional | Optional | | 14 | 14 | 14 | 14 | Ultra-low (850 E-TEC), Optional (900 ACE Turbo R) | 14 | 17 | 14 | 14 |
| GAUGE | *Type* | 4.5 in. digital 10.25 in. touchscreen (opt.) | 4.5 in. digital 10.25 in. touchscreen (opt.) | 4.5 in. digital | 4.5 in. digital | 4.5 in. digital | 4.5 in. digital 10.25 in. touchscreen (opt.) | 7.2 in. digital Large panoramic 7.8 in. wide LCD color display in option | | 7.2 in. digital Large panoramic 7.8 in. wide LCD color display in option | 4.5 in. digital display | 4.5 in. digital display | 7.2 in. digital display | 7.2 in. digital display 7.8 in. wide LCD color (opt. 900 ACE Turbo R) 10.25 in. touchscreen (opt. 850 E-TEC) | 7.2 in. digital | 7.8 in. wide LCD color display | 4.5 in. digital display | 4.5 in. digital display |
| SUSPENSION | *Front suspension* | RAS 3 | RAS 3 | RAS 3 | RAS 3 | RAS 3 | RAS 3 | RAS X | | RAS X | RAS X | RAS X | RAS X | RAS X | RAS X | RAS X | RAS X | RAS X |
| | *Front shock* | HPG Plus with lightweight springs | HPG Plus with lightweight springs | HPG | HPG | Motion Control (Neo)/ HPG (Neo+) | KYB Pro 36 EA-3 w/ lightweight springs | KYB Pro 36 R EA | | HPG Plus | HPG | Motion Control | KYB Pro 40 R EA | KYB Pro 36 EA-3 (REV Gen5) KYB Pro 36 EA (REV Gen4) KYB Pro Smart-Shox opt. | HPG Plus | HPG | HPG | Motion Control |
| | *Rear suspension* | tMotion XT | tMotion X | tMotion | tMotion | Neo | tMotion X | cMotion | | cMotion | cMotion | cMotion | rMotion X | rMotion X | rMotion X | rMotion X | rMotion X | SC-5M |
| | *Center shock* | HPG Plus with lightweight spring | HPG Plus with lightweight spring | HPG | HPG | Torsion spring | KYB Pro 40 EA-3 w/ lightweight spring | KYB Pro 40 EA | | HPG Plus | HPG | Motion Control | KYB Pro 40 EA (double-rate springs) | KYB Pro 40 EA-3 (REV Gen5) KYB Pro 40 EA (REV Gen4) | HPG Plus | HPG | HPG | Motion Control |
| | *Rear shock* | KYB Pro 36 EA-3 | HPG Plus | HPG | HPG | Motion Control | KYB Pro 40 EA-3 | KYB Pro 40 EA | | KYB Pro 36 EA | HPG | HPG | KYB Pro 40 EA | KYB Pro 40 EA-3 (REV Gen5) KYB Pro 40 EA (REV Gen4) KYB Pro Smart-Shox opt. | KYB† Pro 36 EA-3 ( REV Gen5) KYB Pro 36 EA (REV Gen4) | ACS (Air Control Suspension) | HPG | HPG |
| ROTAX ENGINE | *Engine* | 850 E-TEC Turbo R 850 E-TEC | 850 E-TEC Turbo R 850 E-TEC | 850 E-TEC | 850 E-TEC | 600 EFI – 55 600 EFI – 40 | 850 E-TEC Turbo R 850 E-TEC | 850 E-TEC | | 850 E-TEC | 850 E-TEC 600R E-TEC | 600 EFI | 600R E-TEC | 850 E-TEC 900 ACE Turbo R | 850 E-TEC 600R E-TEC 900 ACE Turbo R | 850 E-TEC 600R E-TEC 900 ACE Turbo R 900 ACE Turbo 900 ACE | 850 E-TEC 600R E-TEC 900 ACE Turbo R 900 ACE Turbo 900 ACE | 600 EFI 600 ACE |
| | *Fuel tank (L / US gal)* | 36 / 9.5 | 36 / 9.5 | 36 / 9.5 | 36 / 9.5 | 36 / 9.5 | 36 / 9.5 | 36 / 9.5 | | 36 / 9.5 | 36 / 9.5 | 36 / 9.5 | 36 / 9.5 | 36 / 9.5 | 36 / 9.5 | 36 / 9.5 | 36 / 9.5 | 36 / 9.5 |
| TRACK | *Lenght x Width x Profile (in.)* | PowderMax X-Light: 154 x 16 x 3.0 165 x 16 x 3.0 175 x 16 x 3.0 (850 E-TEC Turbo R only) | PowderMax Light with FlexEdge: 154 x 16 x 2.5 165 x 16 x 2.5 (sea-level opt. only) PowderMax X-Light with FlexEdge: 154 x 16 x 3.0 165 x 16 x 3.0 | PowderMax Light with FlexEdge: 154 x 16 x 2.5 PowderMax X-Light with FlexEdge: 154 x 16 x 3.0 165 x 16 x 3.0 175 x 16 x 3.0 | PowderMax II with FlexEdge: 146 x 16 x 2.5 PowderMax Light with FlexEdge: 154 x 16 x 2.5 165 x 16 x 2.5 PowderMax X-Light with FlexEdge: 154 x 16 x 3.0 165 x 16 x 3.0 | Cobra with FlexEdge (Neo): 146 x 14 x 1.35 Hurricane with FlexEdge (Neo+): 146 x 15 x 1.75 | PowderMax II with FlexEdge: 146 x 16 x 2.5 PowderMax Light with FlexEdge: 154 x 16 x 2.5 165 x 16 x 2.5 sea-level opt. only PowderMax X-Light with FlexEdge: 154 x 16 x 3.0 165 x 16 x 3.0 | Cobra: 146 x 15 x 1.6 Ice Cobra: 146 x 15 x 1.6 PowderMax: 146 x 16 x 2.0 154 x 16 x 2.0 154 x 16 x 2.5 | | Cobra: 146 x 15 x 1.6 Ice Cobra: 146 x 15 x 1.6 PowderMax: 146 x 16 x 2.0 | Cobra: 146 x 15 x 1.6 PowderMax: 146 x 16 x 2.0 | Cobra: 146 x 15 x 1.35 PowderMax: 146 x 16 x 2.0 opt. | RipSaw II 2-ply: 137 x 15 x 1.25 | RipSaw: 137 x 15 x 1.25 Ice Ripper XT: 137 x 15 x 1.25 137 x 15 x 1.5 | RipSaw: 137 x 15 x 1.25 Ice Ripper XT: 137 x 15 x 1.25 137 x 15 x 1.5 | Ice Ripper XT: 137 x 15 x 1.25 | RipSaw: 137 x 15 x 1.25 | Cobra: 137 x 15 x 1.35 |
| OVERALL DIMENSIONS | *Ski stance (in.)* | 34 adjustable | 34 adjustable | 36 adjustable | 36 adjustable | 34 adjustable | 36 adjustable | 39 adjustable | | 39 adjustable | 39 adjustable | 39 adjustable | 43 adjustable | 43 adjustable | 43 adjustable | 43 adjustable | 43 adjustable | 43 adjustable |
| | *Length (in.)* | 125.5 (154 in.) 129.9 (165 in.) 136 (175 in.) | 125.5 (154 in.) 129.9 (165 in.) | 125.5 (154 in.) 129.9 (165 in.) 136 (175 in.) | 122.4 (146 in.) 130.6 (154 in.) 135.9 (165 in.) | 125.5 | 120.4 (146 in.) 125.5 (154 in.) 129.9 (165 in.) | 125 (146 in.) 129.3 (154 in.) | | 125 | 125 | 125 | 119.6 | 119.6 | 119.6 | 119.6 | 119.6 | 119.6 |
| | *Width (in.)* | 42.5 to 43.7 | 42.5 to 43.7 | 42.5 to 43.7 | 42.5 to 43.7 | 42.5 to 43.7 | 42.5 to 43.7 | 44.9 to 46.5 | | 44.9 to 46.5 | 44.9 to 46.5 | 44.9 to 46.5 | 47.6 – 48.5 – 49.4 | 47.6 – 48.5 - 49.4 | 47.6 - 48.5 - 49.4 | 47.9 | 47.9 | 47.9 |
| | *Height (in.)* | 51.4 | 54.9 | 54.9 | 54.9 | 43 | 54.9 | 50.5 | | 50.5 | 50.5 | 50.5 | 49.9 | 49.9 | 49.9 | 52.4 | 49.9 | 49.9 |
| ESTIMATED DRY WEIGHT | *By engine (lb)* | 850 E-TEC Turbo: 449 (154 in.) 456 (165 in.) 462 (175 in.) 850 E-TEC: 430 (154 in.) 437 (165 in.) | 850 E-TEC Turbo R: 448 (154 in.) 454 (165 in.) 850 E-TEC: 429 (154 in.) 436 (165 in.) | 445 (154 in.) 448 (165 in.) 454 (175 in.) | 447 (146 in.) 443 (154 in.) 447 (165 in.) | 600 EFI – 55: 430 (Neo+) 600 EFI – 40: 419 (Neo) | 850 E-TEC Turbo R: 461 (154 in.) 466 (165 in.) 850 E-TEC: 447 (146 in.) 462 (154 in.) 446 (165 in.) | 472 (146 in.) 485 (154 in.) | | 462 | 850 E-TEC: 482 600R E-TEC: 466 | 446 | 468 | 850 E-TEC: 496 900 ACE Turbo R: 533 | 850 E-TEC: 486 600R E-TEC: 470 900 ACE Turbo R: 524 | 850 E-TEC: 518 600R E-TEC: 502 900 ACE Turbo R: 556 900 ACE Turbo: 552 900 ACE: 531 | 850 E-TEC: 486 600R E-TEC: 470 900 ACE Turbo R: 524 900 ACE Turbo: 518 900 ACE: 497 | 600 EFI: 440 600 ACE: 469 |

| SPECIFICATIONS | | TRAIL MXZ X-RS | TRAIL MXZ NEW BLIZZARD | TRAIL MXZ SPORT | TRAIL MXZ NEW NEO | TRAIL MXZ NEW 120/200 | TRAIL GRAND TOURING LIMITED | TRAIL GRAND TOURING SPORT | SPORT-UTILITY EXPEDITION XTREME | SPORT-UTILITY EXPEDITION SE | SPORT-UTILITY EXPEDITION LE | SPORT-UTILITY EXPEDITION SPORT |
|---|---|---|---|---|---|---|---|---|---|---|---|---|
| COLOR | | Platinum Silver / Spartan Red<br>Black | Neo Yellow<br>Black | Neo Yellow / Black | Neo Yellow / Catalyst Grey (Neo)<br>Neo Yellow / Black (Neo+) | Neo Yellow | Platinum Silver / Spartan Red (Luxury Package)<br>Black | Black / Neo Yellow | Black / Spartan Red | Catalyst Grey / Orange Crush<br>Black | Arctic Desert / Black<br>Black | Black / Neo Yellow |
| FEATURES | Platform | REV Gen5 (850 E-TEC only)<br>REV Gen4 | REV Gen5 (850 E-TEC only)<br>REV Gen4 | REV Gen4 | REV Gen4 | Youth | REV Gen4 | REV Gen4 | REV Gen4 | REV Gen4 | REV Gen4 | REV Gen4 |
| | Skis | Pilot X<br>Pilot TX (opt. w/ Smart-Shox) | Pilot X | Pilot 5.7 | Pilot 5.7 | | Pilot 5.7 SL | Pilot 5.7 SL | Pilot DS 3 | Pilot 7.4 | Pilot 7.4 | Pilot DS 2 |
| | Seating | Trail performance | Trail performance | Trail compact | Trail ultra-compact | | 2-up heated | 2-up | 1-up modular with rear seat storage | 2-up modular with underseat storage | 2-up modular with underseat storage | 2-up |
| | Handlebar | U-shaped aluminum with J-hooks/<br>Transparent handguards | U-shaped aluminum with J-hooks/<br>Transparent handguards | U-shaped aluminum with J-hooks | Narrow standard with J-hooks/ handguards | | Standard | Standard | Standard with J-hooks/<br>Grab handle | Standard with J-hooks/Grab handle | Standard with J-hooks/Grab handle | Standard with J-hooks |
| | Starter | Electric | Electric | Electric | Electric | Electric (200)<br>Manual (120) | Electric | Electric | Electric | Electric | Electric | Electric |
| | Reverse | RER | RER | RER | RER | | Electro-mechanic | Mechanical | RER (850 E-TEC)<br>Electro-mechanic (Turbo R) | RER (2-stroke)<br>Electro-mechanic (ACE engines) | RER (600R E-TEC)<br>Electro-mechanic (ACE engines) | RER (600 EFI)<br>Mechanical (ACE engines) |
| | Windshield height (in.) | Optional | 14 | 14 | Optional | Low | 23 with mirrors | 23 with mirrors | 14 | 23 with mirrors | 23 with mirrors | 23 |
| GAUGE | Type | 7.2 in. digital display | 7.2 in. digital display | 4.5 in. digital display | 4.5 in. digital display | | 7.2 in. digital display<br>7.8 in. wide LCD color display (Luxury Package) | 4.5 in. digital display | 4.5 in. digital display | 7.2 in. wide digital<br>7.8 in. wide LCD color (opt. on ACE engines) | 4.5 in. digital display | 4.5 in. digital display |
| SUSPENSION | Front suspension | RAS X | RAS X | RAS X | RAS X | A-arms | RAS X | RAS X | RAS X | RAS X | RAS X | RAS X |
| | Front shock | KYB Pro 40 R EA-3<br>KYB Pro Smart-Shox opt. | KYB Pro 36 EA-3 | Motion Control | Motion Control | Hydraulic twin-tube | HPG | Motion Control | HPG Plus | HPG | HPG | Motion Control |
| | Rear suspension | rMotion X | rMotion X | SC-5M | Neo | Neo | rMotion X | SC-5M | SC-5U | SC-5U | SC-5U | SC-5U |
| | Center shock | KYB Pro 40 R EA-3 | HPG Plus | Motion Control | Torsion spring | Slide rail, adjustable torsion spring | HPG | Motion Control | HPG Plus | HPG | HPG | Motion Control |
| | Rear shock | KYB Pro 40 R EA-3<br>KYB Pro Smart-Shox opt. | KYB Pro 36 EA-3 | Motion Control | Motion Control | | ACS (Air Control Suspension) | HPG | KYB Pro 36 | ACS (Air Control Suspension) | HPG | HPG |
| ROTAX ENGINE | Engine | 850 E-TEC<br>600R E-TEC | 850 E-TEC<br>600R E-TEC | 600 EFI | 600 EFI – 55<br>600 EFI – 40 | 200<br>120 | 900 ACE Turbo R<br>900 ACE Turbo<br>900 ACE | 900 ACE<br>600 ACE | 850 E-TEC<br>900 ACE Turbo R | 850 E-TEC<br>900 ACE Turbo R<br>900 ACE Turbo<br>900 ACE | 600R E-TEC<br>900 ACE Turbo R<br>900 ACE Turbo<br>900 ACE | 600 EFI<br>900 ACE<br>600 ACE |
| | Fuel tank (L / US gal) | 36 / 9.5 | 36 / 9.5 | 36 / 9.5 | | 0.55 / 0.15 | 36 / 9.5 | 36 / 9.5 | 42 / 11.1 | 42 / 11.1 | 42 / 11.1 | 36 / 9.5 |
| TRACK | Lenght x Width x Profile (in.) | RipSaw:<br>129 x 15 x 1.5<br>Ice Ripper XT:<br>129 x 15 x 1.5 | RipSaw:<br>129 x 15 x 1.25<br>Ice Ripper XT:<br>129 x 15 x 1.25 | RipSaw:<br>129 x 15 x 1.25 | Cobra (Neo):<br>120 x 14 x 1.0<br>RipSaw (Neo+):<br>120 x 15 x 1.25 | Cobra:<br>93 x 10 x 1.0 (200)<br>67 x 10 x 0.75 (120) | Silent Track II:<br>137 x 15 x 1.25<br>Studded Silent Track II:<br>137 x 15 x 1.25<br>(Luxury Package) | Silent Track II:<br>137 x 15 x 1.25 | Cobra WT:<br>154 x 20 x 1.8 | Silent Cobra WT:<br>154 x 20 x 1.5<br>Silent Ice Cobra WT:<br>154 x 20 x 1.5 opt.<br>Silent Cobra WT:<br>154 x 20 x 1.8 opt. | Silent Cobra WT:<br>154 x 20 x 1.5<br>154 x 24 x 1.5 | Charger:<br>154 x 16 x 1.5 |
| OVERALL DIMENSIONS | Ski stance (in.) | 43 adjustable | 43 adjustable | 43 adjustable | 39 adjustable | 30.5 adjustable | 43 adjustable | 43 adjustable | 39 adjustable | 39 adjustable | 39 adjustable | 39 adjustable |
| | Length (in.) | 115.2 | 115.2 | 115.2 | 113.4 (Neo) | 73 (200)<br>84 (120) | 123.1 | 123.1 | 129.6 | 128.2 | 128.2 | 130.3 |
| | Width (in.) | 47.6 - 48.5 - 49.4 | 47.6 - 48.5 - 49.4 | 47.9 | 45.6 to 47.3 | 36 | 47.9 | 47.9 | 44.9 to 46.5 | 47.7 to 48.8 | 47.7 to 48.8 | 44.9 to 46.5 |
| | Height (in.) | 49.9 | 49.9 | 49.9 | 41.7 | 34 | 59.6 | 59.6 | 50.4 | 59.6 | 59.6 | 59.6 |
| ESTIMATED DRY WEIGHT | By engine (lb) | 850 E-TEC:<br>493<br>600R E-TEC:<br>479 | 850 E-TEC:<br>480<br>600R E-TEC:<br>466 | 435 | 600 EFI – 55:<br>404<br>600 EFI – 40:<br>412 (Neo+) | 217 (200)<br>170 (120) | 900 ACE Turbo R:<br>590<br>900 ACE Turbo:<br>586<br>900 ACE:<br>559 | 900 ACE:<br>530<br>600 ACE:<br>509 | 850 E-TEC:<br>596<br>900 ACE Turbo R:<br>634 | 850 E-TEC:<br>654<br>900 ACE Turbo R:<br>694<br>900 ACE Turbo:<br>689<br>900 ACE:<br>666 | **20 in. track**<br>600R E-TEC: 617<br>900 ACE Turbo R: 670<br>900 ACE Turbo: 666<br>900 ACE: 640<br>**24 in. track**<br>600R E-TEC: 626<br>900 ACE Turbo R: 681<br>900 ACE Turbo: 676<br>900 ACE: 640 | 600 EFI:<br>504<br>900 ACE:<br>578<br>600 ACE:<br>532 |

| SPECIFICATIONS | | SPORT-UTILITY | | | | |
|---|---|---|---|---|---|---|
| | | TUNDRA | | SKANDIC | | |
| | | | | NEW | NEW | |
| | |  LT |  SPORT |  SE |  LE |  SPORT |
| COLOR | | Black | Neo Yellow / Black | Catalyst Grey / Orange Crush Black | Arctic Desert / Black Black | Black / Neo Yellow |
| FEATURES | Platform | REV Gen4 | REV Gen4 | REV Gen4 | REV Gen4 | REV Gen4 |
| | Skis | Pilot DS 2 | Pilot DS 2 | Pilot 7.4 w/ liners | Pilot 7.4 | Pilot 7.4 |
| | Seating | Short 2-up | Short 2-up | 2-up modular with underseat storage | 2-up modular with underseat storage | 1-up modular with rear seat storage |
| | Handlebar | Standard with J-hooks/ Grab handle | Standard with J-hooks/ Grab handle | Standard with J-hooks/ Grab handle | Standard with J-hooks/ Grab handle | Standard with J-hooks |
| | Starter | Electric | Electric | Electric | Electric | Electric |
| | Reverse | RER (600 EFI) Mechanical (600 ACE) | RER (600 EFI) Mechanical (600 ACE) | RER (2-stroke) Electro-mechanic (ACE engines) | RER (2-stroke) Electro-mechanic (ACE engines) | RER |
| | Windshield height (in.) | 17 | 17 | 23 with mirrors | 23 with mirrors | 17 |
| GAUGE | Type | 4.5 in. digital display | 4.5 in. digital display | 7.2 in. digital display | 4.5 in. digital display | 4.5 in. digital display |
| SUSPENSION | Front suspension | LTS | LTS | LTS | LTS | LTS |
| | Front shock | Motion Control | Motion Control | Motion Control | Motion Control | Motion Control |
| | Rear suspension | SC-5U | cMotion | SC-5U | SC-5U | SC-5U |
| | Center shock | Motion Control | Motion Control | HPG | Motion Control | Motion Control |
| | Rear shock | HPG | HPG | HPG | HPG | HPG |
| ROTAX ENGINE | Engine | 600 EFI 600 ACE | 600 EFI 600 ACE | 600R E-TEC 900 ACE | 600R E-TEC 600 EFI 900 ACE 600 ACE | 600 EFI |
| | Fuel tank (L / US gal) | 36 / 9.5 | 36 / 9.5 | 42 / 11.1 | 42 / 11.1 | 42 / 11.1 |
| TRACK | Lenght x Width x Profile (in.) | Charger: 154 x 16 x 1.5 | Cobra: 146 x 16 x 1.6 | Silent Cobra WT: 154 x 20 x 1.5 154 x 20 x 1.8 Silent Ice Cobra WT: 154 x 20 x 1.5 154 x 24 x 1.5. opt. Silent Ice Cobra SWT: 154 x 24 x 1.5 opt. | Silent Cobra WT: 154 x 20 x 1.5 Silent Cobra SWT: 154 x 24 x 1.5 (opt. 900 ACE and 600R) | Utility WT: 154 x 20 x 1.25 |
| OVERALL DIMENSIONS | Ski stance (in.) | 32 | 32 | 35 | 35 | 35 |
| | Length (in.) | 129.3 | 122.4 | 126.9 | 126.9 | 129.3 |
| | Width (in.) | 39.1 | 39.1 | 42.8 | 42.8 | 42.8 |
| | Height (in.) | 59.6 | 53.9 | 59.6 | 59.6 | 53.9 |
| ESTIMATED DRY WEIGHT | By engine (lb) | 600 EFI: 491 600 ACE: 515 | 600 EFI: 466 600 ACE: 486 | **20 in. track** 600R E-TEC: 632 900 ACE: 656 **24 in. track** 600R E-TEC: 669 900 ACE: 693 | **20 in. track** 600R E-TEC: 596 600 EFI: 575 900 ACE: 620 600 ACE: 698 **24 in. track** 600R E-TEC: 633 900 ACE: 657 | 520 |



# ACCESSORIES

# // ACCESSORIES


77 PLATFORM/ACCESSORY FIT GUIDE
78 LinQ ACCESSORIES
82 FUEL & OIL CADDIES
82 STORAGE
93 SLEIGH, RACKS & HOLDERS
96 SEATS & BACKRESTS
100 WINDSHIELDS & WIND PROTECTION
107 HANDGUARDS & HANDLEBAR
109 MIRRORS
110 ADJUSTABLE RISERS & EXTENSION KITS
113 LED LIGHTS
114 BUMPERS, HITCHES & WINCHES
122 PROTECTION & REINFORCEMENT
126 TOE-HOLDS, FOOTRESTS & KNEE PADS
128 SUSPENSION & FOX SHOCK KITS
130 VENT KITS & PREFILTERS
132 COOLING & LUBRICATION
133 ELECTRICAL & ELECTRONICS
137 TRAILERING & COVERS
140 GARAGE & TRUCK SLED DECKS


## SKI-DOO ACCESSORIES LIMITED WARRANTY*

// 1-YEAR ON BRP ACCESSORIES

*Purchased at an authorized BRP dealership/distributor or on a BRP-authorized online store. Other exclusions may apply, see complete limited warranty or contact your Ski-Doo authorized dealer. Unless otherwise stipulated or required by law, this limited warranty does not apply to factory-installed accessories.



# GET THE RIGHT ACCESSORIES FOR YOUR SLED

You'll see a list of platforms like REV Gen4 (Narrow and Wide), REV-XP, REV-XS, REV-XM and REV-XU after the descriptions in this catalog—these indicators tell you which accessories fit your snowmobile.

**Use this chart to find the platform you're riding and choose the right items to personalize your ride.**



*REV GEN4 (NARROW)*



*REV GEN4 (WIDE)*

## 2023

| MODEL | ENGINE | PLATFORM |
|---|---|---|
| ***MXZ®*** | | |
| X-RS® Blizzard® | 850 E-TEC | **REV Gen5** |
| X-RS® Blizzard® Sport | 600R E-TEC 600 EFI | **REV Gen4 (Narrow)** |
| Neo | 600 EFI | **REV Gen4 (Narrow)** |
| ***BACKCOUNTRY™*** | | |
| X-RS® X® Backcountry™ Sport | All | **REV Gen4 (Narrow)** |
| ***RENEGADE®*** | | |
| X-RS® X® Adrenaline® | 850 E-TEC | **REV Gen5** |
| X-RS® X® Adrenaline® Sport | 600R E-TEC 600 EFI | **REV Gen4 (Narrow)** |
| X-RS® X® Adrenaline® Sport | 900 ACE 900 ACE Turbo 900 ACE Turbo R 600 ACE | **REV Gen4 (Wide)** |
| Enduro™ | All | **REV Gen4 (Wide)** |
| ***GRAND TOURING*** | | |
| Limited Sport | All | **REV Gen4 (Wide)** |
| ***SUMMIT®*** | | |
| X® X® with Expert Package Edge® SP® | All | **REV Gen5** |
| Neo | 600 EFI | **REV Gen4 (Narrow)** |
| ***FREERIDE™*** | | |
| | All | **REV Gen5** |
| ***EXPEDITION®*** | | |
| Sport | All | **REV Gen4 (Wide)** |
| LE SE Xtreme™ | All | **REV Gen4 (Wide) 20"** |
| LE | All | **REV Gen4 (Wide) 24"** |
| ***TUNDRA™*** | | |
| LT Sport | All | **REV Gen4 (Wide)** |
| ***SKANDIC®*** | | |
| LE SE Sport | All | **REV Gen4 (Wide) 20"** |
| LE SE | All | **REV Gen4 (Wide) 24"** |

## 2022

| MODEL | ENGINE | PLATFORM |
|---|---|---|
| ***MACH Z™*** | | |
| | 900 ACE Turbo R | **REV Gen4 (Wide)** |
| ***MXZ®*** | | |
| X-RS® X® TNT® Sport | All | **REV Gen4 (Narrow)** |
| ***BACKCOUNTRY™*** | | |
| X-RS® X® Backcountry™ Sport | All | **REV Gen4 (Narrow)** |
| ***RENEGADE®*** | | |
| X-RS® X® Adrenaline® Sport | 850 E-TEC 600R E-TEC 600 EFI | **REV Gen4 (Narrow)** |
| X-RS® X® Adrenaline® Sport | 900 ACE 900 ACE Turbo 900 ACE Turbo R 600 ACE | **REV Gen4 (Wide)** |
| Enduro™ | All | **REV Gen4 (Wide)** |
| ***GRAND TOURING*** | | |
| Limited Sport | All | **REV Gen4 (Wide)** |
| ***SUMMIT®*** | | |
| X® X® with Expert Package SP | All | **REV Gen4 (Narrow)** |
| ***FREERIDE™*** | | |
| | All | **REV Gen4 (Narrow)** |
| ***EXPEDITION®*** | | |
| Sport | All | **REV Gen4 (Wide)** |
| LE SE Xtreme™ | All | **REV Gen4 (Wide) 20"** |
| SWT | All | **REV Gen4 (Wide) 24"** |
| ***TUNDRA™*** | | |
| | All | **REV Gen4 (Wide)** |
| ***SKANDIC®*** | | |
| WT Sport | All | **REV Gen4 (Wide) 20"** |
| SWT | All | **REV Gen4 (Wide) 24"** |

// YOU CAN ALSO VISIT THE SKI-DOO OWNERS CENTER: HTTPS://WWW.SKI-DOO.COM/OWNERS/PREVIOUS-MODEL-YEARS.HTML

# LinQ SYSTEM ACCESSORIES

## // FAST, EASY AND SECURE

**A BRP EXCLUSIVE, LinQ IS A TOOL-LESS SYSTEM FOR NEAR-INSTANT INSTALLATION OF ACCESSORIES.**

- LinQ accessories to transform your machine to fit the moment.
- No tools needed: quickly install and remove accessories by hand.
- Stylish, fully integrated solution to your cargo needs.
- Sturdy mounting system that holds up in every terrain.

TUNNEL POSITIONS

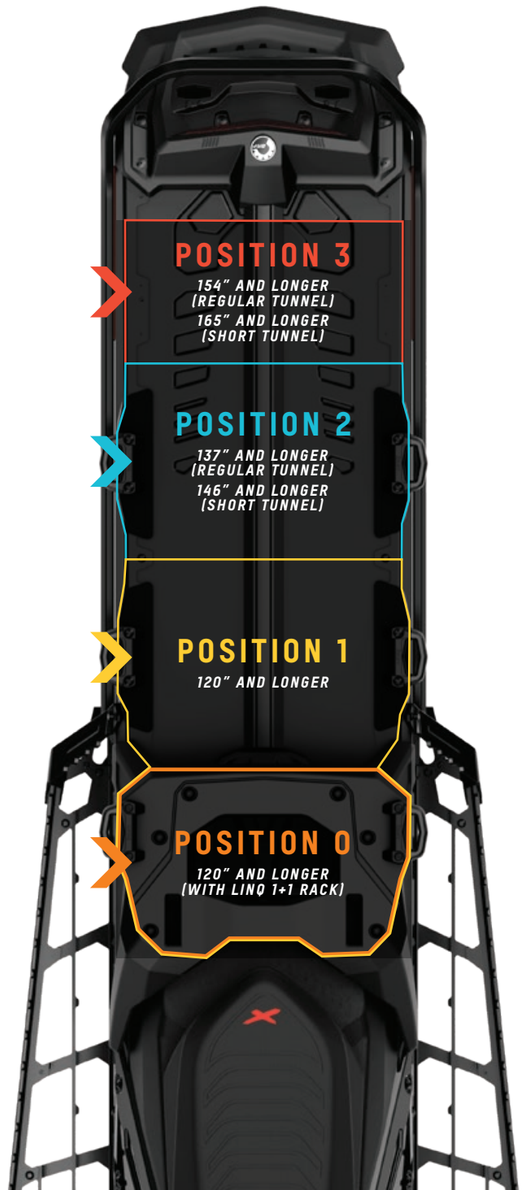


**LinQ is the industry standard in fast, secure and easy accessory attachment. Here's how you can use multiple LinQ items together to create the perfect ride.**

## REV GEN5, NEO AND REV GEN4 VEHICLES MULTIPLE TUNNEL CONFIGURATIONS

| | POSITION 0 | POSITION 1 | | | POSITION 2 | | POSITION 3 |
|---|---|---|---|---|---|---|---|
| | 120" AND LONGER | 120" | 129" AND LONGER | | 137" AND LONGER (REGULAR TUNNEL) 146" AND LONGER (SHORT TUNNEL) | | 154" AND LONGER (REGULAR TUNNEL) 165" AND LONGER (SHORT TUNNEL) |
| | ON LINQ 1+1 RACK | ON MXZ NEO TUNNEL | ON THE TUNNEL | ON TOP OF LINQ STACKABLE FUEL CADDY | ON THE TUNNEL | BEHIND THE FUEL CADDY | ON THE TUNNEL |
| **LinQ OIL CADDY** 860202445 | NO | YES | YES | YES | YES | YES | NO |
| **LinQ STACKABLE FUEL CADDY** 860202246 | NO | YES | YES | NO | NO too heavy for this position | NO | NO |
| **LinQ FUEL CADDY** 860202247 | NO | YES | YES | NO | NO too heavy for this position | NO | NO |
| **LinQ DEEP SNOW PRO BAG** 860202456 | YES | NO | YES | YES | YES except 146" (Short Tunnel) | YES except 146" (Short Tunnel) | NO |
| **LinQ TRAIL PRO BAG** 860201986 | YES | NO | YES | YES | YES except 146" (Short Tunnel) | YES except 146" (Short Tunnel) | NO |
| **LinQ SLIM WATERPROOF TUNNEL BAG** 860202451 | NO | NO | YES position #1 and #2 required | NO | YES position #1 and #2 required | YES position #2 and #3 required | YES position #2 and #3 required |
| **LinQ SNOWBOARD/SKI RACK** 860202191 | NO | NO | NO | NO | YES position #0 and #2 required | YES position #0 and #2 required | NO |
| **LinQ ROLL-TOP BAG** 715008110 | YES | NO | YES | YES | YES on 146" and up | NO | NO |
| **LinQ ADVENTURE TUNNEL BAG** 860202444 | NO | NO | YES position #1 and #2 required | NO | YES position #1 and #2 required | NO | NO |
| **LinQ MODULAR CARGO BOX – 10 L** 715005494 | NO | NO | YES | NO | YES except 146" (Short Tunnel) | YES except 146" (Short Tunnel) | NO |
| **LinQ THERMAL BOX** 219400964 | NO | NO | YES except when LinQ 1 + 1 Backrest is installed | NO | NO too heavy for this position | NO | NO |
| **LinQ ADVENTURE CARGO BOX** 860202448 | NO | NO | NO | NO | YES position #1 and #2 required on 146" and up | | NO |
| **LinQ CARGO BOX – 62 L** 860202446 | NO | NO | YES position #1 and #2 required | NO | YES position #1 and #2 required | NO | NO |
| **LinQ CARGO BOX – 40 L** 860202442 | NO | NO | YES position #1 and #2 required | NO | YES position #1 and #2 required | NO | NO |
| **LinQ SR21 TUNNEL BAG** 860202449 | NO | YES | YES except when LinQ 1 + 1 Backrest and 1 + 1 Seat are installed | | YES | NO | NO |
| **LinQ SPORT BAG** 860202447 | YES | YES | YES | YES | YES | YES | NO |
| **LinQ URBAN BAG** 219401026 | YES | NO | YES | YES | YES on 146" and up | NO | NO |
| **LinQ TOOL BOX** 715008111 | NO | NO | YES except with 1 + 1 Seat | NO | NO too heavy for this position | NO | NO |
| **LinQ SADDLEBAGS** 860200624 | NO | YES | YES | NO | NO | NO | NO |
| **UNIVERSAL LinQ RACK** 860202208 | NO | YES | YES | NO | YES | YES | NO |
| **LinQ REMOVABLE SNOW FLAP** 860201914 | NO | NO | YES Specific installation required, see instruction sheet for details. | | YES Specific installation required, see instruction sheet for details. | | YES Does not fit Short Tunnel. |

# LinQ ACCESSORIES REQUIREMENTS CHART

| | COMPATIBILITY / REQUIREMENTS | | | | COMPATIBILITY / REQUIREMENTS | | |
|---|---|---|---|---|---|---|---|
| | REV GEN5, NEO, REV GEN4 16" | | REV GEN4 20" – 24"* | | RADIAN LYNX | REV-XM, REV-XS, REV-XP, REV-XU 16" | REV-XU 20" – 24" |
| | 2022 AND UP | 2021 AND PRIOR | 2023 AND PRIOR | | 2022 AND UP | | |
| **LinQ ACCESSORIES WITH 16" BASE** | LinQ anchors mounted 16 inches apart, center-to-center. Can be used on Can-Am ATV and SSV vehicles, Sea-Doo watercrafts and Ski-Doo snowmobiles. | | | | | | |
| **LinQ OIL CADDY – 1 GAL** **860202445** | LinQ Cargo Base Kit **860201806** *(for installation on LinQ Stackable Fuel Caddy or on stackable LinQ accessories)* | LinQ Cargo Base Kit **860201806** *(for installation on tunnel or on stackable LinQ accessories)* | LinQ Cargo Base Kit **860202482** *(for installation on tunnel)* or **860201806** *(for installation on stackable LinQ accessories)* | | LinQ Cargo Base Kit **860201806** *(for installation on LinQ Stackable Fuel Caddy or on stackable LinQ accessories)* | LinQ Cargo Base Kit **860201806** | LinQ Adaptor Plate **860200945** and LinQ Cargo Base Kit **860201806** |
| **LinQ STACKABLE FUEL CADDY – 4 GAL** **860202246** | No further requirements | LinQ Cargo Base Kit **860201806** *(for installation on tunnel)* | LinQ Cargo Base Kit **860202482** *(for installation on tunnel)* | | No further requirements | LinQ Cargo Base Kit **860201806** and Shim Kit **860201432** | |
| **LinQ FUEL CADDY – 3 GAL** **860202247** | | | | | | LinQ Cargo Base Kit **860201806** | |
| **LinQ DEEP SNOW PRO BAG – 30 L** **860202456** | LinQ Cargo Base Kit **860201806** *(for installation on LinQ Stackable Fuel Caddy or on stackable LinQ accessories)* | LinQ Cargo Base Kit **860201806** *(for installation on tunnel or on stackable LinQ accessories)* | LinQ Cargo Base Kit **860202482** *(for installation on tunnel)* or **860201806** *(for installation on stackable LinQ accessories)* | | LinQ Cargo Base Kit **860201806** *(for installation on LinQ Stackable Fuel Caddy or on stackable LinQ accessories)* | LinQ Cargo Base Kit **860201806** and Shim Kit **860201432** | |
| **LinQ TRAIL PRO BAG** **860201986** | | | | | | | |
| **LinQ SLIM WATERPROOF TUNNEL BAG – 26 L** **860202451** | No further requirements | LinQ Cargo Base Kit 2 X **860201806** *(for installation on tunnel)* | LinQ Cargo Base Kit 2x **860202482** *(for installation on tunnel)* | | No further requirements | Not compatible | Not compatible |
| **SLIM TUNNEL BAG WITH SOFT STRAPS – 15 L** **860202440** | | | | | | LinQ Cargo Base Kit 2x **860201806** *(Not compatible on REV-XS)* | |
| **LinQ SNOWBOARD/SKI RACK** **860202191** | | LinQ Cargo Base Kit **860201806** *(for installation on tunnel)* | Not compatible | | | Not compatible | |
| **LinQ ROLL-TOP BAG – 40 L** **715008110** | LinQ Cargo Base Kit **860201806** *(for installation on LinQ Stackable Fuel Caddy or on stackable LinQ accessories)* | LinQ Cargo Base Kit **860201806** *(for installation on tunnel or on stackable LinQ accessories)* | LinQ Cargo Base Kit **860202482** *(for installation on tunnel)* or **860201806** *(for installation on stackable LinQ accessories)* | | LinQ Cargo Base Kit **860201806** *(for installation on LinQ Stackable Fuel Caddy or on stackable LinQ accessories)* | LinQ Cargo Base Kit **860201806** and Shim Kit **860201432** | LinQ Adaptor Plate **860200945** and LinQ Cargo Base Kit **860201806** |
| **TUNNEL BACKPACK WITH LinQ SOFT STRAP – 28 L** **860200939** | No further requirements | LinQ Cargo Base Kit 2 X **860201806** *(for installation on tunnel)* | Not compatible | | No further requirements | LinQ Cargo Base Kit 2x **860201806** *(Not compatible on REV-XS)* | Not compatible |
| **LinQ ADVENTURE TUNNEL BAG – 40 L** **860202444** | | | | | | Not compatible | |
| **LinQ THERMAL BOX – 16 L** **219400964** | | LinQ Cargo Base Kit **860201806** *(for installation on tunnel)* | LinQ Cargo Base Kit **860202482** *(for installation on tunnel)* | | | LinQ Cargo Base Kit **860201806** and Shim Kit **860201432** | LinQ Adaptor Plate **860200945** and LinQ Cargo Base Kit **860201806** |
| **LinQ ADVENTURE CARGO BOX – 90 L** **860202448** | | LinQ Cargo Base Kit 2 X **860201806** *(for installation on tunnel)* | LinQ Cargo Base Kit 2x **860202482** *(for installation on tunnel)* | | | REV-XM requires LinQ Cargo Base Kit 2x **860201806** *(Not compatible with REV-XU, REV-XP and REV-XS)* | Not compatible |
| **LinQ CARGO BOX – 62 L** **860202446** | | | | | | Not compatible | |
| **LinQ CARGO BOX – 40 L** **860202442** | | | | | | REV-XM requires LinQ Cargo Base Kit 2x **860201806** *(Not compatible with REV-XU, REV-XP and REV-XS)* | |
| **LinQ SR 21 TUNNEL BAG – 21 L** **860202449** | LinQ Cargo Base Kit **860201806** *(for installation on LinQ Stackable Fuel Caddy or on stackable LinQ accessories)* | LinQ Cargo Base Kit **860201806** *(for installation on tunnel or on stackable LinQ accessories)* | LinQ Cargo Base Kit **860202482** *(for installation on tunnel)* or **860201806** *(for installation on stackable LinQ accessories)* | | LinQ Cargo Base Kit **860201806** *(for installation on LinQ Stackable Fuel Caddy or on stackable LinQ accessories)* | Not compatible | |
| **LinQ SPORT BAG – 17 L** **860202447** | | | | | | LinQ Cargo Base Kit **860201806** *(Not compatible with REV-XU)* | LinQ Adaptor Plate **860200945** and LinQ Cargo Base Kit **860201806** |
| **LinQ URBAN BAG** **219401026** | | | | | | LinQ Cargo Base Kit **860201806** and Shim Kit **860201432** | |
| **LinQ TOOL BOX – 19 L** **715008111** | No further requirements | LinQ Cargo Base Kit **860201806** *(for installation on tunnel)* | LinQ Cargo Base Kit **860202482** *(for installation on tunnel)* | | No further requirements | LinQ Cargo Base Kit **860201806** and Shim Kit **860201432** | LinQ Adaptor Plate **860200945** and LinQ Cargo Base Kit **860201806** |
| **LinQ MODULAR CARGO BOX – 10 L** **715005494** | No further requirements | LinQ Cargo Base Kit **860201806** *(for installation on tunnel)* | LinQ Cargo Base Kit **860202482** or **860201806** *(for installation on tunnel)* | | LinQ Cargo Base Kit **860201806** | | |
| **LinQ RACKS & HOLDERS** | | | | | | | |
| **LinQ UNIVERSAL RACK** **860202208** | No further requirements | LinQ Cargo Base Kit **860201806** *(for installation on tunnel)* | LinQ Cargo Base Kit **860202482** *(for installation on tunnel)* | | No further requirements | LinQ Cargo Base Kit **860201806** | Not compatible |
| **LinQ TOOL HOLDER** **860201846** | | | | | | | LinQ Cargo Base Kit **860201806** |

*Skandic Sport 2022 and 2021 may have specific requirements. Please refer to product descriptions.*

# FUEL & OIL CADDIES

### LinQ FUEL CADDY – 1 GALLON

REV Gen5, Neo, REV Gen4, XS, XM, XR, XP, XU

**860201774** • Canada only*
**860201775** • US only*



- 1 US gallon (3.78 liter) capacity.
- Smaller size for less weight.
- Can be used in position 1 or 2 and on top of LinQ Stackable Fuel Caddy.
- Easy pour design for sleds or power tools.
- Doesn't fit Grand Touring REV-XS.

### LinQ OIL CADDY – 1 GALLON

REV Gen5, Neo, REV Gen4, XS, XM, XR, XP, XU

**860202445**



- 1 US gallon (3.78 liter) capacity.
- Can be used in position 1 or 2.
- Can be used on top of LinQ Stackable Fuel Caddy.
- Doesn't fit Grand Touring REV-XS.
- See table on pages 80 and 81 for requirements.

### LinQ STACKABLE FUEL CADDY – 4 GALLONS

REV Gen5, Neo, REV Gen4, XU, XS, XM, XR

**860202246**



- Quick, easy and secure installation with LinQ system.
- No-Spill spout for easy use.
- 3.7 US gallon (14 liter) capacity.
- Single LinQ tunnel bag or LinQ oil caddy stacks on top for more storage.
- Meets the new latest Flame Mitigation Device (FMD) standard.
- Cannot be used with Luggage Rack Reinforcement Plates (860200798).
- See table on pages 80 and 81 for requirements.

### LinQ FUEL CADDY – 3 GALLONS

REV Gen5, Neo, REV Gen4, XS, XM, XR, XP, XU

**860202247**



- Quick, easy and secure installation with LinQ system.
- No-Spill spout for easy use.
- 3 US gallon (11 L) capacity.
- Meets the new latest Flame Mitigation Device (FMD) standard.
- Doesn't fit Grand Touring REV-XS.
- Cannot be used with Luggage Rack Reinforcement Plates (860200798).
- See table on pages 80 and 81 for requirements.

# STORAGE

### LinQ DEEP SNOW PRO BAG – 30 L

REV Gen5, Summit Neo, REV Gen4, XU, XS, XM, XR

**860202456**



- Watertight (with TiZip )—our highest level of waterproofing.
- Lightweight—uses one set of LinQ fasteners.
- Fits positions 1, 2 and on top of LinQ Stackable Fuel Caddy.
- Expandable 9 to 30 liters (2—6 US gallons, 550–1,831 cu in) capacity.
- Improved Shovel Holder System.
- See table on pages 80 and 81 for requirements.

### DEEP SNOW PRO BAG COVER LID

Fits on Deep Snow Pro Bag and LinQ Trail Pro Bag

**860202132**



- Replacement cover for Deep Snow Pro Bag.
- Improved Shovel Holder System on lid.
- Mesh pocket under the lid for easy, quick access to smaller items.

*While supplies last.



### SEAT STORAGE BOX – 6 L

REV Gen5 (Trail), REV Gen4 (Narrow)

**860202532**



- Low-profile integrated storage box utilizing the battery area.
- Added storage capacity of 1.5 L (0.4 US gallons, 916 cu in) with battery and 6 L for a vehicle without the battery.
- Same height as battery cover.
- Rainproof liner included.
- Works with Deluxe Tool Kit (860202029) (not included).
- Allows use of LinQ tunnel accessories.
- Does not work with 1 + 1 seat.

### LinQ SLIM WATERPROOF TUNNEL BAG – 26 L

REV Gen5, Summit Neo, REV Gen4 (137" and longer)

**860202451**



- Rigid bottom and top design.
- Allows storage of removable snow flap.
- Waterproof inner roll top.
- Shovel can be stored while assembled on top of the bag.
- 16 to 26 liters (4.2 to 6.9 US gallons, 976 to 1,587 cu in) capacity.
- Fit on the tunnel in positions 1 & 2 and 2 & 3.
- See table on pages 80 and 81 for requirements.

### SLIM TUNNEL BAG WITH SOFT STRAPS – 15 L

137" and longer with 1-up and 2-up seats (except XU 20" and 24" and XS)

**860202440**



- Low profile, positioned flat on tunnel, for convenient out-of-the-way storage.
- Easy access full wrap-around zipper.
- Top mount shovel pocket.
- 15 liters (4 US gallons, 915 cu in) capacity.
- See table on pages 80 and 81 for requirements.

### SHOVEL WITH SAW HANDLE

**860201919**



- Design with better cutting edge.
- Features integrated saw handle.
- Blade flips 90° to pull snow away.
- Can be dismantled for easy storage.

### SAW & HANDLE REPLACEMENT FOR SHOVEL

**520002004**



- D-shaped handle.

### 2.8 M AVALANCHE PROBE

**520000408**



- Lightweight, durable and strong ½ inch (12 mm) aluminum tubing construction.
- 7–16" (40 cm) color-coded sections.
- Weight: 13 oz (370 g).

### SKI-DOO PULLING STRAP

**860202195**




- Save your back and get unstuck the easy way.
- Lightweight, compact, affordable.
- Extremely robust material.
- Available in yellow only. 2 per pack.

## STORAGE

### LinQ DEEP SNOW SEAT BAG – 5 L

REV Gen4 Summit and Freeride (without battery) — **860201274**



- 5 liters (1.3 US gallons, 305 cu in) capacity.
- Improved design with greater capacity than the LinQ Seat Bag (860201355).
- Thermoformed hard plastic base.
- Requires Low Profile Battery Compartment Cover (860201505).

### EXTREME SEAT BAG – 5 L

REV-XM, XP, XU Tundra Xtreme — **860200745**



- A must for extreme deep snow riding.
- Low-profile bag lets you add storage without getting in the way of your riding needs.
- Fully integrated and allows for the REV-XM seat to easily clip on/off in seconds without taking away any tunnel space.
- Works in conjunction with REV-XM seat.
- 5 liters (1.2 US gallons, 305 cu in) capacity.
- Inner zipper to access underseat compartment.

### LinQ SNOWBOARD/SKI RACK

REV Gen5, Summit Neo, REV Gen4 16", 146" and longer
Fits short tunnel — **860202191**



- Newly redesigned—simpler, quicker and easier way to attach skis or snowboards.
- Fits 2 snowboards or 1 pair of skis and poles.
- Easy to adjust from skis to boards or back in seconds.
- Fits all sizes of skis, snowboards and snowsurfs.
- Easy release straps can be operated with gloves on.
- Rubber cushions protect edges and hold ski poles securely without damage.
- Non-intrusive positioning.
- Can be installed with stock bumper using the Reinforcement Kit (860202385).
- Works with the new hitch and Adventure rear bumpers also.
- See table on pages 80 and 81 for requirements.

### LinQ SNOWBOARD/SKI RACK REINFORCEMENT KIT

Fits with LinQ Snowboard/Ski Rack (860202191) except REV Gen5 and Renegade X-RS, Grand Touring, MXZ, Expedition Sport and Tundra LT — **860202385**



- Use to install the LinQ Snowboard/Ski Rack with the stock rear bumper.
- Adds strength and support to the tunnel.

### PROTECTIVE DECAL FOR LinQ SNOWBOARD/SKI RACK

*(Not illustrated)* — **516006982**

- To protect your tunnel from ski tip scratches when using the LinQ Snowboard/Ski Rack.

### RISER BLOCK BAG

REV Gen5 (Deep Snow), REV Gen4 with 235 mm riser, XP Summit, XU Tundra, Skandic, XM (for risers 175 mm and up) — **860201564** • Long

REV Gen5 (Deep Snow), REV Gen4 with 165 mm riser and longer, REV-XM, XP, XR, XU Tundra — **860201550** • Short



- Innovative 2-pocket carry bag for secure storage around the steering riser block.
- 3W heated insulated pocket design reduces the chance of water bottles freezing and increases the battery life of small electronic equipment.
- Includes RCA adaptor kit.
- Requires Heated Visor Kit (860201234) for REV-XU, XM, XS, XP, XR and (860201283) for REV Gen4, sold separately.

### OIL SUPPORT CADDY/GOGGLE BAG

REV-XM, XS — **860200614**



- Multi-purpose bag.
- Allows you to easily access and carry an extra liter of XPS oil or a spare set of goggles.
- Installs conveniently on top of the CVT cooling system.
- Models without E-TEC engine need the Acoustic Plate (512060847).



### GOGGLE DRYING BAG

Neo, REV Gen4 (Narrow) — **860201691**



- Designed specifically for a spare set of goggles.
- Under hood heat clears and dries wet fogged goggles.
- Protects goggles during the ride.

### LinQ MODULAR CARGO BOX

REV Gen5, Summit Neo, REV Gen4 — **715005494** • 10 liters (2.6 gallons)



- 10 liters (2.6 gallons) of hard-sided modular storage capacity.
- Heavy duty construction with weather-resistant sealed lid.
- Stackable with single LinQ bag or additional modular boxes for the ideal storage solution.
- See table on pages 80 and 81 for requirements.

### COMBO BAG – 30 L

REV Gen4 (Wide) Renegade (except Renegade Sport) — **860201821**



- Works with Comfort Seat (REV Gen4 (Wide)).
- 30 liters (6 US gallons, 1,831 cu in) capacity.
- Provides additional storage while not using any tunnel space.
- Compatible with LinQ tunnel accessories.
- Multiple compartments with easy access.
- Thermoformed hard plastic base, semi-rigid top and sides.
- Waterproof inner lining.

### SR50 UTILITY BAG – 50 L

REV Gen4 (Wide) 20" and 24" — **860201939**



- Replaces passenger seat in seconds for additional storage.
- Quick release straps to easily access storage underneath.
- Waterproof to keep your cargo dry.
- 50 liters (11 US gallons, 3,052 cu in) capacity.
- Works with the 135-liters LinQ Utility Cargo Box (860201781).

### COMBO BAG – 31 L

REV Gen5 (Trail), REV Gen4 (Narrow)
(MXZ, Backcountry and Renegade except Sport models) — **860201475**



- 31 liters (8.2 US gallons, 1,892 cu in) capacity.
- Multiple compartments with easy access.
- Thermoformed hard plastic base, semi-rigid top and sides.
- Vehicles with pull start require the Battery Cover (860201407).

### LinQ ROLL-TOP BAG – 40 L

REV Gen5, Summit Neo, REV Gen4, XU — **715008110**



- Fully waterproof roll-top design secures gear tightly.
- 40 liters (10.6 US gallons, 2,441 cu in) of adjustable capacity.
- Heavy-duty rigid plastic base.
- Foam-lined bottom for additional protection.
- Integrated handle for easy transportation on/off the vehicle.
- See table on pages 80 and 81 for requirements.

### NEW LinQ URBAN BAG

REV Gen5, Summit Neo, REV Gen4 — **219401026** • Black



- Versatile LinQ storage solution with up to 40 liters (10.5 US gallons) of added storage.
- Heavy-duty construction with high-quality zippers and water resistant outer shell.
- Easy-access large roll-top opening.
- Reversible integrated flap with water-resistant storage.
- Integrated vehicle key holder.
- Waterproof removable liner with integrated pocket and laptop storage.
- Backpack Option includes adjustable, removable shoulder system, ergo-fitted back padding and lightweight shoulder system design.
- See table on pages 80 and 81 for requirements.

### TUNNEL BACKPACK WITH LinQ SOFT STRAP – 28 L

137" and longer (except XU 20" and 24") — **860200939** • Black, **860200940** • Orange



- Includes a compartment for the Ski-Doo Shovel (860201919) and 2.8 m Avalanche Probe (520000408) (not included).
- Quick-disconnect system instantly transforms the bag into a backpack.
- 28 liters (7.4 US gallons, 1709 cu in) capacity.
- See table on pages 80 and 81 for requirements.

## STORAGE

### LinQ ADVENTURE TUNNEL BAG – 40 L

REV Gen5, Summit Neo, REV Gen4 137" and longer — **860202444**



- 40 liters (10.6 US gallons, 2,441 cu in) capacity.
- Thermoformed hard base and semi-rigid sides and top.
- Cover can be removed for easier access.
- Multiple compartments, separators and fixation points for hooks or bungee cords.
- Inside goggle soft pocket.
- See table on pages 80 and 81 for requirements.

### LinQ THERMAL BOX – 16 L

REV Gen5, Summit Neo, REV Gen4, XM, XS, XP, XU (except Grand Touring) — **219400964**



- Rotomolded design with 16 liters (4.2 US gallons, 976 cu in) capacity.
- High quality foam insulation for optimal performance hot or cold.
- Does not fit with 1+1 backrest.
- See table on pages 80 and 81 for requirements.

### LinQ ADVENTURE CARGO BOX – 90 L

REV Gen5, Summit Neo, REV Gen4, XM, 146" and up — **860202448**



- Extra large 90 liters (24 US gallons, 1,465 cu in) capacity.
- Uses 16" LinQ mounts in position 1 and 2.
- Easy on and off.
- 2 LinQ anchors can be added on lid of box to install 16" LinQ accessories or additional storage.
- Rugged and tough rotomolded plastic construction.
- Not compatible with short tunnel.
- See table on pages 80 and 81 for requirements.

### LinQ CARGO BOX – 62 L

REV Gen5, Summit Neo, REV Gen4 137" and up — **860202446**



- Standard on Grand Touring Limited model.
- Optional LinQ mounts can be added on top for even more capacity.
- 62 liters (16.3 gallons, 3,765 cu in) capacity.
- See table on pages 80 and 81 for requirements.

### LinQ CARGO BOX BAG – 62 L

Fits with LinQ Cargo Box (860202446) — **860201635**



- Easy to take everything with you on arrival.
- 62 liters (16.3 gallons, 3,765 cu in) capacity.

### LinQ CARGO BOX TOP COVER

Fits with LinQ Cargo Box (860202446) — **860201808** • Silver; **860201768** • Black



- Matches the color of the vehicle perfectly.

### LinQ CARGO BOX – 40 L

Fits 137" and longer (except all XU and XS models) — **860202442**



- Rigid molded plastic construction with integrated design.
- Provides dry, safe storage.
- 40 liters (11 US gallons, 2,441 cu in) capacity.
- See table on pages 80 and 81 for requirements.



### CARGO BAG – 80 L

REV Gen5, Neo, REV Gen4, XM, XP, XU, Backcountry, Freeride, Renegade, Summit, Tundra, 137" and up — **860200801**



- Rugged all-purpose utility design.
- Sealed PVC construction.
- 80 liters (21 US gallons, 4,882 cu in ) capacity.
- Integrated attachment system.
- Includes rain cover for added resistance to the elements.
- Can also double as travel/duffle bag.

### LinQ RETROFIT KIT FOR CARGO BAG

*(Not illustrated)* — **860200941**

- 4 straps to adapt the Cargo Bag (860200801) to LinQ system.
- LinQ Cargo Base Kit (2x) (860201806) not included but required to mount the bag on the tunnel.

### LinQ TRAIL PRO BAG – 30 L

REV Gen5, Summit Neo, REV Gen4, XU, XS, XM, XR — **860201986**



- Premium bag with our highest level of waterproofing.
- Watertight zipper (TiZip).
- Map holder and quick access storage compartment on lid.
- Mesh pocket under the lid for easy, quick access to smaller items.
- Brightly colored interior makes locating items easier.
- Lightweight and mounts securely using one set of LinQ anchors.
- Expandabl capacity of 9 to 30 liters (2–6 US gallon, 550–1,831 cu in).
- See table on pages 80 and 81 for requirements.

### TRAIL PRO BAG COVER LID

Fits on Deep Snow Pro Bag and LinQ Trail Pro Bag — **860202383**



- Replacement cover for Trail Pro Bag.
- Map holder and quick access storage compartment on lid.
- Mesh pocket under the lid for easy, quick access to smaller items.

### LinQ SR 21 TUNNEL BAG – 21 L

REV Gen5, Neo, REV Gen4 — **860202449**



- Semi-rigid expandable LinQ tunnel bag.
- 21 liters (5.5 US gallons, 1,282 cu in) capacity.
- Can be installed on top of LinQ Stackable Fuel Caddy or behind seat.
- Easy one-second on/off tool-less system.
- See table on pages 80 and 81 for requirements.

### LinQ SPORT BAG – 17 L

REV Gen5, Neo, REV Gen4, XM, XS, XP, XR (except GTX, Grand Touring) — **860202447**



- 17 liters (4.5 US gallons, 1,037 cu in) capacity.
- Rigid bottom, semi-rigid top.
- Does not fit on REV-XU Tundra with a rack.
- See table on pages 80 and 81 for requirements.

### LinQ TRAIL SEAT BAG – 11 L

REV Gen5 (Trail), REV Gen4 (Narrow) MXZ, Backcountry and Renegade (except Sport models) — **860201275**



- 11 liters (2.9 US gallons, 671 cu in) capacity.
- Thermoformed hard plastic base, semi-rigid sides and top.
- Vehicles with pull start require the Battery Cover (860201407).

### LinQ SEAT BAG – 4 L

REV Gen4 (Narrow) — **860201355**



- Integrated storage that stays out of the way.
- 4 liters (1 US gallons, 244 cu in) capacity.
- Easy on/off.
- Can be used with tunnel bags or fuel caddies.
- Vehicles with pull start require the Battery Cover (860201407).
- Thermoformed hard plastic base.

## STORAGE

### HANDLEBAR BAG – 2 L

REV Gen5 (Trail), REV Gen4 without mountain strap | **860201565**



- 2.3 liters (0.6 US gallons, 122 cu in) capacity.
- Semi-rigid construction.
- Mounted sturdily with clamp setup.
- Can be removed easily with vehicle's tool.
- Inside soft liner.
- Water-resistant.
- Thermoformed hard plastic base.
- Features a pocket to separate items.

### LinQ TOOL BOX – 19 L

REV Gen5, Summit Neo, REV Gen4, XU, XM, XS, XP | **715008111**



- 19 liters (5 US gallons, 1,160 cu in) capacity.
- Weather-resistant design features a sealed cover.
- See table on pages 80 and 81 for requirements.

### LinQ SADDLEBAGS – 26 L

REV Gen5, Neo, REV Gen4 16", XP, XR, XM, XS (except Grand Touring, GTX and MXZ X-RS) | **860200624**



- Premium semi-rigid saddlebags using the LinQ mounting system.
- Easy attach and remove.
- Can be used in conjunction with additional LinQ mounted accessories at the same time.
- 26 liters (6.9 US gallons, 1,587 cu in) capacity, (2 x 13 L (2 x 3.45 US gallons)).
- LinQ Fastener included (715001707).
- Requires LinQ Cargo Base kit (860201806) for installation on REV Gen4 16" tunnels (2021 and prior).

### COMBO BAG – 45 L

REV-XP, XR, XS | **860200623***



- Uses easy on/off clip system.
- No need to remove seat.
- Multiple pockets.
- 45 liters (11.9 US gallons, 2,746 cu in) capacity.

### TUNNEL BAG – 40 L

REV-XP, XR, XS, XM, XU Tundra | **860200824**



- Includes a compartment for the Ski-Doo Shovel (860201919) (not included).
- Chassis premarked for easier installation of bag on tunnel.
- 40 liters (10.6 US gallons, 2,441 cu in) capacity.
- Extension provides more cargo space when required.

### TUNNEL BAG – 25 L

REV-XP, XR, XM, XS, XU | **860200826**



- Uses our cleat and bag retaining system (Patent USD607,313).
- Innovative thermoformed tunnel bag, designed for a slick look and rigid structure.
- Chassis premarked for easier installation of bag on tunnel.
- 25 liters (6.6 US gallons, 1,526 cu in) capacity.

### MODULAR TUNNEL BAG EXTENSION – 38 L

REV-XR GTX and Grand Touring, REV-XS Grand Touring | **860200173***



- Versatile multi-configuration bag.
- Use alone, with or without Fuel Caddy, or with Semi-Rigid Tunnel Bag (860200174).
- Installs horizontally or vertically and removes easily.
- 38 liters (10 US gallons, 2,319 cu in) capacity.

*While supplies last.



### LinQ UTILITY CARGO BOX – 135 L

REV Gen4 20" and 24" | **860201781**



- Massive capacity of 135 liters (36 US gallons, 8,238 cu in).
- 4 LinQ anchors (860201806) can be added on lid of box to install 16" LinQ accessories or additional storage.
- Slots molded in for plywood dividers.
- Rugged and tough rotomolded plastic construction.
- Integrated axe and saw holders.
- Removable/lockable lid.
- Dedicated hooks for bungee cords or elastic net to expand storage capacity on top of the box.
- 4 fixation hook points to secure cargo in the box and 4 molded handle features for ease of transportation.
- Multi LinQ Plate Retrofit Kit (860202133) required for REV Gen4 Skandic Sport.

### EXTRA LARGE XU BAG – 150 L

REV-XU Skandic, XU Expedition | **860201179***



- Extra large 150 liters (40 US gallons, 9,154 cu in) capacity bag shaped to fit utility model racks.
- Weather-resistant polyester, includes compartment organizer.

### CARGO BOX – 75 L

REV-XU Skandic WT, SWT, Expedition SE, LE, Xtreme MY19 and prior | **860200395**



- 75 liters (19.8 US gallons, 4,577 cu in) capacity.
- Made of durable polyethylene.
- Provides additional secure storage.
- Convenient flip top provides easy access to stored goods.
- Standard on SE 2019 and prior models.

### RACK AND NET KIT FOR CARGO BOX

**860201025**



- Rack to carry additional items on top of Cargo Box.
- Net to better secure items inside Cargo Box (860200395).

### CENTER CARGO BOX – 20 L

REV-XU Skandic and Expedition | **860200732**



- 20 liters (5.28 US gallons, 1,221 cu in) capacity.
- Easily interchangeable with passenger seat.
- Provides additional storage space.
- Can be padlocked.
- Can be installed in conjunction with Cargo Box (860200395).

### UNDER-SEAT STORAGE BAG

REV-XU Skandic and Expedition | **860201063**



- Padded bag protects your items and makes them easy to transport.

## STORAGE ACCESSORIES

### HEATED TANK BAG – 2 L

REV-XR, XU | **860201127**



- Easy-access bag with full-length zipper.
- Map pocket.
- Access gas cap without removing bag.
- 3W heated, insulated pocket for battery-powered electronics, e.g., cell, GPS.
- Access to the 12V plug-in port.
- 2.4 liters (0.6 US gallons, 122 cu in) capacity.
- Includes RCA adaptor plug kit.
- Requires Heated Visor Kit (860201234) (not included but required for installation).

*While supplies last.

## STORAGE ACCESSORIES

### 3W HEATER FOR BAGS — 515176786



- Replacement or additional heater for heated bags.

### DASHBOARD BAG – 2 L

REV-XP — **860201176**



- Easy-access bag designed to provide extra storage.
- 2 liters (0.5 US gallons, 116 cu in) capacity.

### BATTERY COVER

| | |
|---|---|
| REV Gen4 16" without battery[1] | **860201720** |
| Neo, REV Gen4 16" with battery[2] | **511001210** |



- Stock on REV Gen4 (Wide).
- [1]Support bracket and plastic cover included.
- [2]Plastic cover included.
- Required when installing Comfort Seat (860201551, 860201633) on REV Gen4 (Narrow).

### BATTERY COVER

| | |
|---|---|
| REV Gen4 16" (Narrow) without battery[1] | **860201407** |
| REV Gen4 16" with battery[2] | **511001053** |



- Use in conjunction with LinQ Seat Bag (860201355), LinQ Trail Seat Bag (860201275), LinQ Combo Bag (860201475) or LinQ 1 + 1 Seat System (860201268) on models without a battery.
- Stock on REV Gen5 (Trail), Neo and REV Gen4 (Narrow) with battery.
- [1]Support bracket and plastic cover included.
- [2]Plastic cover included.

### LOW PROFILE BATTERY COMPARTMENT COVER

REV Gen4 16" without battery — **860201505**



- Required for REV Gen4 sleds without battery for LinQ Deep Snow Seat Bag (860201274) and for improved aesthetics.

### GLOVEBOX FOR ONE-PIECE LIGHTWEIGHT HOOD

| | |
|---|---|
| REV Gen4 Summit and Freeride (2020-2021), Summit Expert (2022) with one-piece lightweight hood | **860202193** |
| REV Gen4 Summit and Freeride (2022) with one-piece lightweight hood | **860202572** |



- Adds storage to one-piece lightweight hoods.
- Provides an additionnal 4.6 liters (1.2 gallons, 280 cu in) capacity.
- Approximately 2 water bottles or 2 pairs of goggles.
- Easy access for smaller items.
- Bright yellow interior to find objects easier.
- Water resistant.
- Includes new mount to reposition the factory gauge.
- Works with a windshield or deflector.
- Compatible with USB intelligent Power Outlet Kit (860202433) and 12-Volt Power Outlet Kits (860201423).

### GLOVEBOX EXTENSION / CELL PHONE HOLDER

Neo, REV Gen4 — **860202072**



- Doubles the storage with additional 3.5 liters (0.9 US gallon, 211 cu in) capacity (includes Glovebox Extension (517305966)).
- Can be used with or without windshield.
- Door allows for perfect positioning and mounting of a cell phone.
- Cell Phone heater included.
- Requires USB intelligent Power Outlet Kit (860202433) and Harness Extension for Cellphone Holder and USB plug (515178153) for installation.
- For screen size up to 6.4" (16.26 cm) x 3.3" (8.38 cm).
- Fits all cell phones with a 6.4" screen or smaller.
- Works with capacitive and resistive touch screen technology.
- Not compatible with Summit and Freeride with one-piece lightweight hood.
- Does not include cell phone.



### GLOVEBOX EXTENSION / GPS SUPPORT

Neo, REV Gen4 — **860201249**



- Doubles the storage with additional 4 liters (1 US gallon, 244 cu in) capacity.
- Can be used with or without windshield.
- GPS sold separately.
- Door allows for perfect positioning and mounting of GPS.
- Replaces stock storage compartment cover.
- Not compatible with Summit and Freeride with one-piece lightweight hood.

### NEW GLOVEBOX EXTENSION / GPS SUPPORT

| | |
|---|---|
| REV Gen5 (Trail) | **860202436** • 5 liter (1.3 US gallon) |
| REV Gen5 (Deep Snow) | **860202501** • 6 liter (1.6 US gallon) |

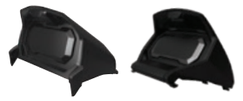

**860202436** **860202501**

- Increases storage by an additional capacity.
- Door allows for perfect positionning and mounting of GPS.
- Replaces stock storage compartment cover.
- Can be used with or without windshield.
- Garmin Zumo 590 GPS sold separately.
- Ready to receive Cellphone Holder 860202372.

### NEW HARNESS EXTENSION FOR USB PLUG

*(Not illustrated)*

REV Gen5 — **515178153**

- Required for USB intelligent Power Outlet Kit 860202433 when installed on REV Gen4 models.

### GLOVEBOX REPLACEMENT DOOR / CELLPHONE HOLDER

*(Not illustrated)*

Fits with Glovebox Extension (860201249) — **860202169**

- Replacement door to update Glovebox Extension with a Cellphone Holder.
- Door allows for perfect positioning and mounting of a cell phone.
- Cell phone heater included.
- Requires USB Intelligent Power Outlet Kit (860202433) and Harness Extension for Cellphone Holder and USB plug (515178153) for installation.
- For screen size up to 6.4" (16.26 cm) x 3.3" (8.38 cm).
- Works with capacitive and resistive touch screen technology.

### NEW CELLPHONE HOLDER

REV Gen5 — **860202372**



- New design is independent of the Glove Box Extension door.
- Water resistant door allows for perfect phone positioning.
- Heating element preserves cell phone battery longer.
- Features capacitive and resistive touch screen technology.
- Spring system in back plate automatically adjusts for thickness.
- USB Intelligent Power Outlet is included for charging.
- Fits all cellphones within 7.2" (185 mm) x 3.3" (85 mm) x (15 mm) dimensions.
- Works with almost all charger wires.
- Does not include cell phone or charging wires.
- Can be used with or without windshield.
- Requires Glovebox Extension (860202436 or 860202501) depending on the vehicle.

### GLOVEBOX LINER

REV-XM, XS 2014 and up — **860201084***



- Padded inner liner protects items.
- Design seals against snow intrusion.
- Glovebox Extension compatible.
- Can be used with 3W Heater for Bags (515176786) (not included).

### GLOVEBOX LINER

Neo, REV Gen4 — **860201270**



- Thermoformed liner has a soft finish interior.
- Features one pocket to separate items.
- Not compatible with Lightweight Hood (860202087).

**While supplies last.*

## LinQ ACCESSORIES AND REPLACEMENT PARTS FOR LinQ STORAGE ACCESSORIES

**MULTI LinQ PLATE RETROFIT KIT** | Skandic Sport | **860202133**



- Retrofit to add Multi LinQ Plate on Skandic Sport.
- Allows more LinQ configurations on the tunnel.
- Includes rear double light.

**LinQ LOCK** | **860201968** • Pack of 1 with 2 keys<br>**860202478** • Pack of 2 with 4 keys



- Simple way to lock most LinQ accessories in place.
- Retrofits most LinQ accessories.
- Lock cover prevents snow and ice build-up.
- Not compatible with LinQ Tool Holder, LinQ Working Light, LinQ 4.2 US gal (16L) cooler and LinQ Tool Box.

**LinQ FASTENER** | **715001707**



- Works with LinQ Snowboard/Ski Rack (860201255/860201222/860202191) and LinQ Saddlebags (860200624).
- Tool-less installation and removal.
- Sold in pairs.

**LinQ CARGO BASE KIT** | **860201806**



- Unique mounting fastener usable on any LinQ System accessory.
- Includes: 2 Cargo LinQ bases and hardware.

**LinQ CARGO BASE KIT** | REV Gen4 (Wide) 20" and 24" equipped with the Multi LinQ Plate | **860202482**



- Unique mounting fastener usable on any LinQ System accessory.
- Includes: 2 Cargo LinQ bases and hardware for Multi LinQ Plate (860202133).

**LinQ CARGO BASE RETROFIT KIT** | REV Gen4 (Wide) 20" and 24"equipped with the Multi LinQ Plate | **860201812**



- Hardware to fit LinQ Cargo Base Kit on 20" and 24" tunnels with Multi LinQ Plate Retrofit Kit (860202133).

**LinQ PROTECTIVE DECAL KIT**

| | |
|---|---|
| REV Gen5, Summit Neo | **516010972** |
| REV Gen4 | **516007627** |



- Durable Lexan[1] decals to protect your tunnel.
- 2 decals included.

**LinQ PROTECTIVE DECAL KIT** | REV-XS, XM, XP, XU Tundra | **860200767**



- Replacement item on model years 2013 and up but required for using the LinQ accessories on model years 2012 and prior.
- 2 decals included.



**RUBBER LATCH SERVICE KIT FOR LinQ TUNNEL ACCESSORIES**
*(Not illustrated)*
LinQ Tunnel Bags and LinQ Fuel and Oil Caddies. | **860201057**

**LinQ REPAIR KIT T-LOCK ALUMINUM**
*(Not illustrated)*
**860201753** • Left Side
**860201754** • Right Side

- Replaces LinQ mechanism.
- Includes lever, T-lock and hardware.

**LinQ REPAIR KIT T-LOCK PLASTIC**
*(Not illustrated)*
**860201137** • Left Side
**860201138** • Right Side

- Replaces LinQ mechanism.
- Includes lever, T-lock and hardware.

**SHIMS FOR LinQ ACCESSORIES** | REV-XS, XM, XP, XU 16" | **860201432**



- Required to fit LinQ accessories on REV-XS, XM, XP and XU Tundra.
- See last column of the chart on page 79 for accessories that require shims.
- Does not fit 120" models.

**LinQ ADAPTOR PLATE** | REV-XU 20" and 24" | **860200945**



- Allows installation of LinQ Cargo Base (860201806) on embossed REV-XU tunnels.

# SLEIGH, RACKS & HOLDERS

## RACKS

**LinQ SLEIGH** | Fits on vehicles equiped with Tongue Hitch | **860202544**



- Comes with an easy to retract protective cover that prevents snow intrusion while still allowing the installation of LinQ accessories on the sleigh top.
- LinQ accessories can be installed on top and inside (LinQ Cargo Base Kit not included).
- Made of high-molecular-weight polyethylene.
- 2-part removable cover.
- Rain resistant.
- Carbide ready (860201044).
- Slots for dividers precast in. (Dividers not included.)
- Dimensions 81" (206 cm) L x 33" (84 cm) W x 21" (54 cm) H.
- Volume 485 L (110 US gallons, 29 597 cu in).
- Weight capacity: 750 lb (340 kg) TOTAL (including top); max on top 75 lb (34 kg).
- Spring dampened pull bar.

**LinQ UNIVERSAL RACK** | REV Gen5, Neo, REV Gen4 | **860202208**



- This Universal Rack can make generic accessories LinQ compatible.
- Allows a multitude of products and configurations on LinQ tunnels.
- See table on pages 80 and 81 for requirements.

## RACKS

### LinQ UNIVERSAL RACK – OTHER BRANDS

Other vehicles with tunnel of 15" to 17" wide (378 mm to 432 mm) — **860202357**



- Universal rack designed to fit non-LinQ tunnels (Ski-Doo and competitive brands).
- Install LinQ accessories on non-LinQ compatible tunnels.
- Allows a multitude of products and configurations on almost any sled.
- Double the storage by adding another on longer tunnels.
- Includes installation hardware for side mounting.
- Fits 14.875 to 17 inch (37.8 cm to 43.2 cm) wide tunnels.

### LinQ REAR CARGO RACK

REV Gen4 (Wide) 20" and 24" — **860201800**



- Replaces passenger seat for extra cargo capacity.
- Simple attachment.
- Retains underseat access with clever hinge system.
- Allows use of more LinQ bags.

### LinQ REAR CARGO RACK

REV-XU Skandic and Expedition — **860200914**



- Provides mounting point for LinQ Cargo Base Kit (860201806).
- Compatible with LinQ fuel caddies and tunnel bags.
- Easily interchangeable with passenger seat.
- Provides additional cargo space.

### CARGO RACK KIT

REV Gen4 146" Backcountry (except Backcountry X-RS) , Summit SP, Tundra — **860202217**

REV Gen4 154" Summit SP, Tundra, Expedition Sport — **860202223**



- Maximizes tunnel cargo capacity.
- Integrated anchor points for bungees or tie downs.
- Adds functionality with mounts for LinQ Tool Holders (860201846).

### LUGGAGE RACK REINFORCEMENT PLATES

REV-XM, XP, XR, XS, XU Tundra — **860200798**



- Additional reinforcement for your long and short rear racks.
- Made of high strength steel.
- Sold in pairs.

### CARGO RACK KIT

REV Gen4 (Wide) 20" Expedition Xtreme and Skandic Sport — **860202245**

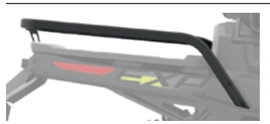

- A convenient way to maximize tunnel cargo space.
- Required to install the Chain Saw Holder (860201827).
- Includes the rack and hardware.
- 1¼" Hitch included.

### REAR RACK EXTENSION

REV-XU Skandic and Expedition — **860200700**



- Delivers increased cargo space.
- Does not fit with XU Heavy-Duty Rear Bumper (860201106).



## HOLDERS

### LinQ AXE HOLDER

REV Gen5, Neo, REV Gen4, XM, XS, XU,137" and up — **860201854**



- Securely mounts on either side of the tunnel using LinQ anchors.
- Universal sizing to fit a wide variety of axes.
- Can be mounted on either side of the vehicle.

### CHAIN SAW HOLDER

REV Gen4 (Wide) 20" and 24" — **860201827**



- Securely mounts to rear of vehicle.
- Retains full function of LinQ accessories, including cargo box.
- Compatible with most blades up to 18".
- Cargo Rack Kit (860202245) required for Expedition Xtreme and Skandic Sport.
- Not compatible with LinQ Adventure Cargo Box (860202448).

### LinQ ICE AUGER HOLDER

REV Gen4 (Wide) 20" and 24" except Skandic Sport and Expedition Xtreme — **860201828**



- Securely mounts to right side of vehicle.
- Easy on/off and installation.
- Retains full function of LinQ accessories.
- Handles augers with up to 10" blades.
- May be installed with Heavy-Duty Hitch Rear Bumper (860201795)

### LinQ GUN BOOT HOLDER

REV Gen4 (Wide) 20" and 24" except Skandic Sport and Expedition Xtreme — **860201829**



- Securely mounts to side of vehicle.
- Easy on and off LinQ installation.
- Retains full function of LinQ accessories.
- Can be installed on either side of the tunnel.
- Required for Gun Boot use on vehicle.
- May be installed with Heavy-Duty Hitch Rear Bumper (860201795).

### GUN BOOT HOLDER

REV-XU Skandic, XU Expedition — **860200984***



- Can be installed on either side of the sled, facing forward or rearward and at any angle.
- Required for Gun Boot use on vehicle.

### LinQ TOOL HOLDER

REV Gen5, Neo, REV Gen4, XS, XM — **860201846**



- Designed for universal applications.
- Convenient swivel latch allows tools like a shovel to be stored in multiple positions.
- Designed specifically for winter use.
- Sold in pairs.
- See table on pages 80 and 81 for requirements.

### GUN BOOT 6.0 IMPACT† BY KOLPIN†

**715001419**



- Features largest interior room of all Kolpin Gun Boot cases.
- Extra room for pistol-grip-type weapons and small bipods.
- Easily fits firearms up to 51" (130 cm) in total length.
- Provides ample room for 60 mm scopes.
- Hatchback design allows easy access.
- Snap-close cover with locking capability.
- Ergonomically designed handle and molded attachment points for sling.
- Designed to accommodate left- and right-hand bolt-action rifles and shotguns.
- Includes removable, shock-absorbing foam and nylon impact liner for superior interior protection.
- Requires Gun Boot Holder (860200984 or 860201829) for installation.

*While supplies last.

# SEATS & BACKRESTS

## SEATS

### HEATED SEAT

REV Gen4 (Wide) 20" and 24" — **860202032**



- Adds warmth in the coldest conditions.
- Multiple High/Low/OFF settings.

### PASSENGER HEATED SEAT

REV Gen4 (Wide) 20" and 24" (Expedition Xtreme and Skandic Sport) — **860202033**



- Complete seat adds warmth for a passenger.
- 1 + 1 configuration.
- Includes heated handles.
- Passenger Backrest (860202036) can be added for more comfort.
- Same seat as 860202037 with heat added.
- High/Low/Off settings.

### HEATED SEAT

Neo, REV Gen4 16" — **860201633**



- Adds warmth in the coldest conditions.
- Multiple High/Low/OFF settings.
- Same base platform as Comfort Seat (860201551) providing additional hip support via wider cushion design.
- Integrated rear storage.
- Battery Cover with Support (860201720) required for REV Gen4 (Narrow) without battery.
- Battery cover (511001210) required for Neo and REV Gen4 (Narrow) with battery.
- 2 Summit seat posts (510006693) required for installation on REV Gen4 (Narrow) Summit 2020 and prior.
- 2 seat post (510007122) required for installation on REV Gen4 (Narrow) Summit and all Sport models, 2021 and up.

### COMFORT SEAT

REV Gen5 (Trail), Neo, REV Gen4 16" — **860201551**



- Provides additional support and length.
- Provides additional hip support via wider cushion design.
- Integrated rear storage.
- Battery Cover with Support (860201720) required for REV Gen4 (Narrow) without battery.
- Battery cover (511001210) required for REV Gen5, Neo and REV Gen4 (Narrow) with battery.
- 2 Summit Seat Posts (510006693) required for installation on REV Gen4 (Narrow) Summit 2020 and prior.
- 2 Seat Posts (510007122) required for installation on REV Gen4 (Narrow) Summit and all Sport models, 2021 and up.
- Not compatible with Battery Cover (860201407).

### HEATED SEAT

REV-XS, XM — **860201458**

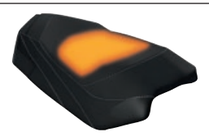

- Add warmth with this heated seat.

### LOW PROFILE SEAT

REV Gen5, Neo, REV Gen4 16" — **860202344**



- Compact design for freedom of movement.
- Great support for deep snow.
- Easy tool-less installation.
- 155 mm (6") height.

### LIGHTWEIGHT PERFORMANCE SEAT

REV Gen5, Neo, REV Gen4 16" — **860202221**



- Ultra-compact design for active riders.
- Our smallest, lightest seat at 1.27 kg (2.8 lb.).
- Allows easier side-to-side changes.
- 100 mm (4") height.
- Provides great freedom of movement.
- Gripper style vinyl resists wear and tear and provides better control.
- Stock on the Summit X with Expert package.



### FORTY7C PERFORMANCE SEAT

REV Gen5, Neo, REV Gen4 16" — **860201736**



- Developed by Deep Snow expert Carl Kuster.
- Provides even greater freedom of movement.
- Lower, narrower and lighter than stock Summit seat.
- Integrated grip areas.

### LinQ 1 + 1 SEAT SYSTEM

REV Gen5, Neo, REV Gen4 16" — **860202348**



- The ultimate in modular seating.
- Allows quick changes between 1-up and 2-up riding.
- Ergonomically correct positions for driver and passenger.
- Two easy tool-less steps:
  1 – Clip in seat.
  2 – Add LinQ 1 + 1 Backrest.
- Battery Cover with Support (860201407) required for vehicle without battery.

### LinQ 1 + 1 SEAT SYSTEM

REV-XM, XS, XP, XR (except GTX, Grand Touring), XU Tundra — **860202347**



- The ultimate in modular seating.
- Allows quick changes between 1-up and 2-up riding.
- Ergonomically correct positions for driver and passenger.
- Two easy tool-less steps:
  1 – Clip in seat.
  2 – Add LinQ 1 + 1 Backrest.

### NEW DRIVER SEAT

REV Gen5, Neo, REV Gen4 16" (except Grand Touring) — **860202523**



- Longer, wider and flatter design provides more hip support.
- Modular design allows easy installation of LinQ Passenger Seat – Sport.
- Seat mounting posts included.

### NEW LinQ PASSENGER SEAT – SPORT

REV Gen5, Neo, REV Gen4 16" (except Grand Touring and Tundra) — **860202325**



- The ultimate modular seating solution.
- Quickly changes from riding solo to riding with a passenger.
- Provides comfortable, ergonomically correct positions for both driver and passenger.
- Easy tool-less clip in attachment with the LinQ system.
- Compatible with LinQ Lock and Passenger Backrest.
- Requires LinQ 1+1 rack (860202414) and Driver Seat (860202523) or MXZ seat for installation.

### NEW LinQ 1 + 1 RACK

REV Gen5, Neo, REV Gen4 16" (except Grand Touring and Tundra) — **860202414**



- Required for LinQ Sport Passenger Seat use.
- Great looks with or without the passenger seat mounted.
- Provides an additionnal LinQ position (for soft accessories only) when passenger seat isn't in use.
- Made of lightweight die cast aluminum.

### 1 + 1 SEAT

REV Gen5, Neo, REV Gen4 16" (except Grand Touring and Expedition) — **860201766**



- Quick, easy installation and ideal ergonomics for driver and passenger.
- Full tunnel capacity is maintained and allows additional accessories to be added.
- Battery Cover with Support (860201407) required for vehicle with rewind.

### 1 + 1 SEAT

REV-XM, XS, XP, XR (except GTX, Grand Touring), XU Tundra — **860200665**



- Quick, easy installation and ideal ergonomics for driver and passenger.
- Full tunnel capacity is maintained and allows additional accessories to be added.

## SEATS

### LinQ 1 + 1 SEAT HEATED GRIPS



| | |
|---|---|
| Neo, REV Gen4 16" with 1 + 1 seat and passenger seat with handles, REV Gen4 (Wide) 20" and 24" with passenger seat with handles | **860201840** |
| REV-XS, XM 2016-2019 | **860202030*** |

- Allow your passenger to ride in comfort in all conditions.
- Easy unplug.
- Requires Seat Wiring Harness (515178588) for installation on REV Gen4 (Wide) 20" and 24" models.

### 2-UP SEAT



REV-XP, XR, XM, XS, XU Tundra — **860201314**

- Extended seat providing convenient 2-up riding.
- Complete seat assembly with passenger strap.
- Replaces existing seat in seconds.
- Ideal use with LinQ Snowboard/Ski Rack (860201222).

### COMPACT PASSENGER SEAT



REV Gen5 (Trail), Neo, REV Gen4 16" — **860202220**

- Longer seat allows for a passenger while being more compact than the 1+1 seat.
- Easy, tool-less installation.
- Complete assembly features a passenger strap.
- Tunnel capacity is maintained for additional accessories.
- 180 mm (7") height.
- Battery Cover with Support (860201720) required for REV Gen4 (Narrow) without battery.
- Battery Cover with Support (511001210) required for Neo and REV Gen4 (Narrow) with battery.

### PASSENGER SEAT



REV Gen4 20" and 24" — **860202037**

- Passenger seat to transform into a 1 + 1 configuration.
- Includes safety handles.
- Passenger Backrest (860202036) can be added for more comfort.
- Stock on REV Gen4 Expedition LE, SE.

### PASSENGER BACKREST



REV Gen4 20" and 24" — **860202036**

- Passenger backrest to complement the Passenger Seat (860202037) for added back comfort.
- Passenger Seat required for installation.
- Stock on REV Gen4 Expedition LE, SE.

### PASSENGER MUFFS FOR 1 + 1 SEAT



| | |
|---|---|
| REV Gen4, XS, XM 2018 and prior with 1+1 Seat | **860200831*** |
| | **860201028**** |

- Muffs fit snugly around the passenger handles and provide total warmth even on the coldest days.
- Easy to install and remove.

*Fits seat with handles and handguards.
**Fits seat with handles only.

### PASSENGER MUFFS FOR 1 + 1 SEAT



REV Gen5 (Trail), Neo, REV Gen4, XS, XM 2019 and up with 1+1 Seat. — **860201929**

- Ultra warm passenger muffs with fleece liner.
- Designed for extreme cold conditions.
- Easy to remove in warmer weather.
- Fits with REV Gen4 new handles.

*While supplies last.



### HEATED GRIPS WITH GUARDS FOR 1 + 1 SEAT



REV-XS, XM 2016 and up — **860201322**

- Allow your passenger to ride in comfort in all conditions.
- Self disconnect.

## BACKRESTS

### LinQ 1 + 1 SEAT BACKREST



| | |
|---|---|
| REV Gen5 (Trail), Neo, REV Gen4 16" | **860202360** |
| REV-XM, XS, XP, XR (except GTX, Grand Touring), XU Tundra | **860202362** |

- Option for 1 + 1 Seat when not sold as a kit.
- Can be locked using a padlock (not included).

### LinQ 1 + 1 BACKREST ANCHOR BASE KIT



| | |
|---|---|
| REV Gen5 (Trail), Neo, REV Gen4 16" | **860202059** |
| REV-XM, XS | **860202060** |

- Allows installation of LinQ 1 + 1 Backrest on more than one vehicle.

### RUBBER LATCH FOR LinQ 1 + 1 BACKREST

*(Not illustrated)*

**510005617** • Left Side
**510005618** • Right Side

### ADJUSTABLE BACKREST



REV-XP, XR, XM, XS, XU Tundra — **860200823**

- Adjustable and works in conjunction with 2-Up Seat (860201314).
- Positionable for passenger or driver use.
- Rigid steel frame and integrated foam pad.
- Easy, tool-less removal when not needed.

### PASSENGER SEAT / BACKREST



REV-XU Skandic, XU Expedition — **619400068**

### PASSENGER BACKREST



REV-XU Skandic, XU Expedition — **860200060**

- Enhances the comfort level of your seat by adding this backrest option.

# WINDSHIELDS & WIND PROTECTION

*// EASILY CHOOSE YOUR IDEAL WINDSHIELD*

| ADJUSTABLE WINDSHIELDS | | LOWEST POSITION | HIGHEST POSITION |
|---|---|---|---|
| 1 *HIGH TO ULTRA HIGH* | 860201782 | 23" (58.5 cm) | 27" (68.5 cm) |
| 2 *MEDIUM TO HIGH* | 860201493 | 19" (48.5 cm) | 23" (58.5 cm) |
| 3 *LOW TO MEDIUM* | 860201820 | 14.5" (37 cm) | 17" (43 cm) |

| WINDSHIELDS | | HEIGHT |
|---|---|---|
| 4 *ULTRA HIGH* | 860202124 | 27.5" (70 cm) |
| 5 *HIGH* | 860201495 | 23" (58.5 cm) |
| 6 *MEDIUM* | 860201258 / 860202471 | 17" (43 cm) |
| 7 *LOW* | 860201448 / 860202472<br>860202470 / 860202602 | 14" (36 cm) |
| 8 *ULTRA LOW* | 860201259 | 8" (20 cm) |
| 9 *CENTRAL DEFLECTOR* | 517305875 | For REV Gen4 platform |

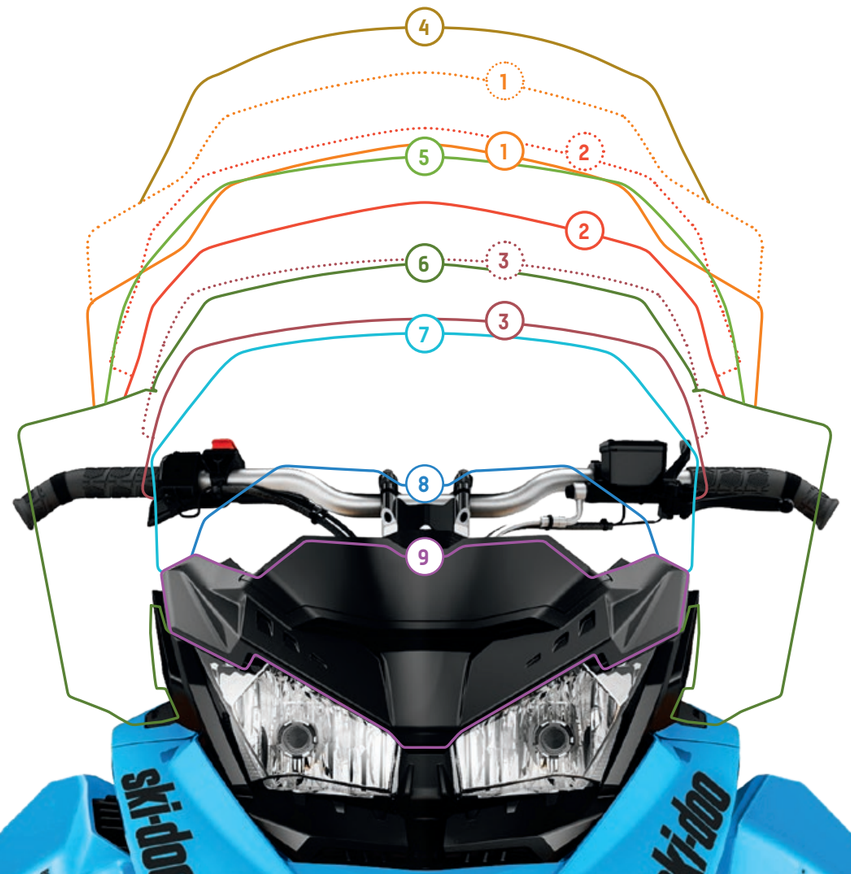




## REV GEN5

**NEW WINDSHIELD SIDE DEFLECTORS**
*(Not illustrated)*

REV Gen5 (Trail) — **860202469**

- Added wind protection for use with low height windshields.

**NEW LOW WINDSHIELD**

REV Gen5 (Trail) — **860202470**



- Low height – 14" (36 cm) in length.
- Offers additionnal wind protection with integrated style.
- Injection molded for clarity.
- Includes windshield support.

**NEW MEDIUM WINDSHIELD**
*(Not illustrated)*

REV Gen5 (Trail) — **860202471**

- Medium height – 17" (43 cm) in length.
- Offers additionnal wind protection with integrated style.
- Injection molded for clarity.
- Compatible with Windshield-Mount Mirrors.
- Complete kit includes windshield, side deflectors, windshield support and hardware.

**NEW POWDER DEFLECTOR**
*(Not illustrated)*

REV Gen5 (Deep Snow) — **860202601**

- Deflects snow to the sides and away from the rider's face.
- Compatible with Low Windshield.

**NEW LOW WINDSHIELD**
*(Not illustrated)*

REV Gen5 (Deep Snow) — **860202602**

- Low height – 19" (48 cm) in length.
- Offers additionnal wind protection with integrated style.
- Compatible with Powder Deflector.

**NEW LOW WINDSHIELD**

Youth — **860202570**



- Low height – 14" (36 cm) in length.
- Offers protection with integrated style.
- Thermoformed molded for clarity.

## REV GEN4

**ADJUSTABLE WINDSHIELD LOW TO MEDIUM**

Neo, REV Gen4 — **860201820** • Smoke



- Quickly change your level of wind protection with the flip of a lever.
- Compatible with Glove Box Extension (860201249).
- Adjustable range of 14.5" (37 cm) to 17" (43 cm).
- Windshield support included.

## REV GEN4

### ADJUSTABLE WINDSHIELD MEDIUM TO HIGH

Neo, REV Gen4 (except X-RS)

**860201493** • Smoke



- Quickly change your level of wind protection with the flip of a lever.
- Compatible with Glove Box Extension (860201249).
- Adjustable range of 19" (48.5 cm) to 23" (58.5 cm).
- Side deflectors and windshield support not included.
- Not compatible with One-Piece Lightweight Hood.

### ADJUSTABLE WINDSHIELD HIGH TO ULTRA HIGH

Neo, REV Gen4 (except X-RS)

**860201782** • Smoke



- Quickly change your level of wind protection with the flip of a lever.
- Compatible with Glove Box Extension (860201249).
- Adjustable range of 23" (58.5 cm) to 27" (68.5 cm).
- Side deflectors and windshield support not included.
- Not compatible with One-Piece Lightweight Hood.

### ULTRA LOW WINDSHIELD

Neo, REV Gen4

**860201259** • Smoke



- 8" (20 cm) in length.
- Sporty and aggressive look.
- Windshield support not included.

### LOW WINDSHIELD

Neo, REV Gen4

**860201448** • Smoke



- 14" (36 cm) in length.
- High quality, best durability.
- Includes low windshield support.

### LOW WINDSHIELD

Neo, REV Gen4

**860202472** • Dark Smoke



- 14" (36 cm) in length.
- High quality, best durability.
- Includes low windshield support.

### MEDIUM WINDSHIELD KIT

Neo, REV Gen4

**860201258** • Smoke



- 17" (43 cm) in length.
- Offers a generous amount of protection with integrated style.
- Injection molded for clarity.
- Compatible with Windshield-Mount Mirrors.
- Complete kit includes windshield, side deflectors, windshield support and hardware.
- Not compatible with One-Piece Lightweight Hood.

### HIGH WINDSHIELD

Neo, REV Gen4 (except X-RS)

**860201495** • Smoke



- 23" (58.5 cm) in length.
- Side deflectors and windshield support not included.
- Compatible with Windshield-Mount Mirrors.
- Not compatible with One-Piece Lightweight Hood.

### ULTRA HIGH WINDSHIELD

Neo, REV Gen4 (except X-RS)

**860202124**



- New shape.
- 27.5" (70 cm) length.
- Provides maximum wind protection.
- Side deflectors and support not included.
- Compatible with Windshield-Mount Mirrors.
- Not compatible with One-Piece Lightweight Hood.



### WINDSHIELD SIDE DEFLECTOR KIT

Neo, REV Gen4 – For low and ultra low windshields

**860201449** • Smoke



- Increases wind deflection for windshields.
- Compatible with Adjustable Windshield – Low to Medium (860201820).
- Not compatible with One piece Lightweight Hood.

### WINDSHIELD SIDE DEFLECTOR KIT

Neo, REV Gen4 – For low and ultra low windshields

**860202473** • Dark Smoke



- Increases wind deflection for windshields.
- Compatible with Adjustable Windshield – Low to Medium (860201820).
- Not compatible with One-Piece Lightweight Hood.

### WINDSHIELD SIDE DEFLECTOR KIT

Neo, REV Gen4 – For medium and higher windshields

**860201256** • Smoke



- Increased wind deflection for windshields.
- Compatible with Windshield-Mount Mirrors.

### SIDE PANEL DEFLECTOR KIT

REV Gen4 (Wide)

**860201879** • Smoke



- Added wind protection.
- Standard on the Grand Touring Limited.

### WINDSHIELD SUPPORT

Neo, REV Gen4 – For ultra low and low windshields

**517305749** • Black
**517306380** • Manta Green
**517306375** • Sunburst Yellow



### WINDSHIELD SUPPORT

Neo, REV Gen4 – For medium and high windshields

**517306183** • Black
**517306456** • Sunburst Yellow



- Not compatible with One-Piece Lightweight Hood.

### CENTRAL DEFLECTOR

Neo, REV Gen4

**517305875** • Black
**517306432** • Sunburst Yellow
**517306433** • Manta Green
**517306473** • White Bright
**517306697** • Lava Red
**517306764** • Orange Crush
**517307054** • Labrador Blue
**517307061** • Nordic Teal
**517307383** • Catalyst Grey



## REV-XS & REV-XM

### ULTRA LOW WINDSHIELD

REV-XM, XS

**860200901** • Smoke



- 6" (15 cm) in length.

## REV-XS & REV-XM

### MEDIUM SPORT PERFORMANCE FLARED WINDSHIELD



REV-XM, XS — **860200696** • Smoke

- 12" (31 cm) in length.
- One piece with integrated deflectors.

### MEDIUM INJECTED WINDSHIELD AND SIDE DEFLECTOR KIT



REV-XM, XS — **860200759** • Smoke

- 13.5" (34 cm) in length.
- Offers a generous amount of protection with integrated style.
- Medium side deflectors ready to receive Windshield Mirrors (860200694).
- Includes medium windshield support.

### HIGH WINDSHIELD



REV-XM, XS — **860200928** • Smoke

- 18" (46 cm) in length.
- Side deflectors and windshield support not included.

### HIGH SPORT PERFORMANCE FLARED WINDSHIELD



REV-XM, XS — **860200602** • Smoke*

- 16" (41 cm) in length.
- One piece with integrated deflectors.
- Redirects snow in deep powder conditions.

### ULTRA HIGH WINDSHIELD



REV-XM, XS — **860201185** • Clear

- 24" (60 cm) in length.
- Our largest sport windshield ever.
- One piece with integrated deflectors.
- Maximum wind protection, for extreme cold conditions.

### EXTRA HIGH WINDSHIELD



REV-XM, XS — **860201182** • Smoke*

- 20" (51 cm) in length.
- Standard on 2016-2018 Grand Touring Sport.
- Side deflectors and windshield support not included.

### WINDSHIELD SIDE DEFLECTOR KIT



REV-XM, XS – For low and ultra low windshields — **860201012** • Smoke
REV-XM, XS – For medium and high windshields — **860200912** • Smoke

- Increases wind deflection for windshields.
- Ready for Windshield Mirrors (860200694).

### WINDSHIELD SIDE DEFLECTOR KIT



REV-XM, XS – For medium and higher windshields — **860201221** • Smoke

- Adds lower body wind protection.
- Ready for Windshield Mirrors (860200694).
- Standard on 2016-2019 Grand Touring Sport.

*While supplies last.



### WINDSHIELD BASE



REV-XM, XS – For ultra low, low and one-piece windshields — **517305403** • Grey, **517305617** • Manta Green, **517305808** • Sunburst Yellow — **517305948** • Lava Red, **517305952** • White, **860200937** • Black

REV-XM, XS – For medium and high windshields — **860200944** • Black

- Colored plastic trim.
- Hardware not included.

## REV-XP

### ULTRA LOW FIXED WINDSHIELD



REV-XP — **860200646** • Smoke with X graphic

- 6" (15 cm) in length.

### LOW WINDSHIELD AND SIDE DEFLECTOR KIT



REV-XP — **860200545** • Smoke

- 12" (30 cm) in length.
- Same complete kit as found on the 2011–2012 X package models.
- Retrofittable on earlier REV-XP snowmobile models.
- Includes low windshield, side deflector and base kit.

### MEDIUM WINDSHIELD KIT



REV-XP — **860200478** • Smoke

- Includes medium injected windshield, dark smoke side deflector kit and base kit.

### SPORT PERFORMANCE FLARED WINDSHIELD



REV-XP — **860200547** • Smoke

- 17.5" (44.5 cm) in length.
- One piece with integrated side deflectors.
- Complete with base mounting kit.

### ULTRA HIGH WINDSHIELD



REV-XP — **860200225** • Clear with fading*

- 23" (58 cm) in length.

*Note: J-hooks need to be removed to install windshield.*

### WINDSHIELD SIDE DEFLECTOR KIT



REV-XP — **860200084** • Dark Smoke

- For medium and high windshields.
- Increases wind deflection.

*While supplies last.

## REV-XP

**WINDSHIELD BASE KIT** — REV-XP — **860200089** • Black



- For ultra low and low windshields.
- Plastic trim for windshields.

**WINDSHIELD BASE KIT** — REV-XP — **860200091** • Black



- For medium, high and ultra high windshields.
- Plastic trim for windshields.

## REV-XR & REV-XU

**SPORT PERFORMANCE FLARED WINDSHIELD** — REV-XR, XU — **860200438** • Smoke*



- 17.5" (44.5 cm) in length.
- One piece with integrated side deflectors.
- Top flare maximizes wind protection and redirects snow in deep powder conditions.
- Complete with base mounting kit.

**SPORT PERFORMANCE FLARED WINDSHIELD** — REV-XR, XU — **860200453** • Smoke



- 14" (35.6 cm) in length.
- One piece with integrated side deflectors.
- Top flare maximizes wind protection and redirects snow in deep powder conditions.
- Complete with base mounting kit.

**EXTRA HIGH ONE-PIECE WINDSHIELD** — REV-XR, XU — **860201000** • Clear



- 23" (58 cm) in length.
- One piece with integrated deflectors.
- Maximum wind protection, for extreme cold conditions.
- Ready to receive Windshield-Mount Mirrors (517305787).
- No windshield base required.

**WINDSHIELD SIDE DEFLECTOR KIT** — REV-XR, XU — **860200234** • Smoke



- Increased wind deflection for windshields.

*Note: Fits medium and high windshields using base kit (860200229).*

**WINDSHIELD BASE KIT** — REV-XR, XU — **860200229** • Black



- For medium and high windshields.
- Black plastic trim.

**While supplies last.*



**WINDSHIELD BASE KIT** — REV-XR, XU — **860200230** • Black



- For extra high and ultra high windshields.
- Black plastic trim.

# HANDGUARDS & HANDLEBAR

## HANDGUARDS

**FLEXIBLE HANDGUARDS** — REV Gen5, Neo, Youth, REV Gen4, XS, XM, XP, XR, XU — **860201561** • Black



- Designed to withstand roll-overs and tough boondocking conditions.
- Feature smaller size deflector made of flexible material.
- Mounts feature a flexible base.
- Does not fit with medium to ultra high windshields.
- Fits with Pivoting Mirror Kit for Handguards (860200893).

**TRANSPARENT HANDGUARDS** — REV Gen5, Neo, REV Gen4, XS, XM, XP, XR, XU — **860200789** • Clear



- Design delivers better protection and great style.
- Comes with Black/Grey colored interchangeable caps.
- Appropriate for trail riding.
- Sold in pairs.
- Does not fit with medium to ultra high windshields.

**TRANSPARENT HANDGUARDS** — REV Gen5, Neo, REV Gen4, XS, XM, XP, XR, XU — **860202474** • Dark Smoke



- Design delivers better protection and great style.
- Comes with Black/Grey colored interchangeable caps.
- Appropriate for trail riding.
- Sold in pairs.
- Does not fit with medium to ultra high windshields.

**HANDGUARD EXTENSION KIT** — Vehicles with Transparent Handguards — **860200781**



- Semi-rigid, won't collapse at high speed.
- Delivers additional hand protection from the elements.
- Can be installed and removed in seconds.

**HANDGUARD CAPS** — Vehicles with Transparent Handguards or Flexible Handguards

**860201344** • Sunburst Yellow / Black
**860201345** • Race Orange / Black
**860201346** • Black / Grey
**860201347** • White / Black
**860201648** • Lava Grey
**860201457** • Orange Crush / Black
**860201649** • Manta Green / Black
**860202098** • Octane Blue / Black



- Colored caps let you customize your look.
- Sold in pairs.

## HANDLEBAR ACCESSORIES

### DEEP SNOW LOW GRAB HANDLE

REV Gen5, Neo, REV Gen4 — **860201975**



- Provides more freedom of movement in active riding.
- Standard on Summit X with Expert package 2020 and up. Standard on Summit and Freeride 2021 and up.
- Not compatible with Handlebar Bag (860201565).

### GRAB HANDLE

REV Gen5, Neo, REV Gen4 — **860202035**



- Molded rubber grab handle used for side-hilling maneuvers.
- Not compatible with Handlebar Bag (860201565).

### PERFORMANCE SMALL DIAMETER HANDLEBAR

REV Gen5, Neo, REV Gen4 — **860201974**



- Narrow design used for more agile and precise maneuvers in mountain or trail applications, ideal for smaller hand grip.
- Smaller diameter providers a lighter, easier grip.
- 20 mm (0.79 in) grip, 22 mm (0.87 in) clamper diameter at riser.
- Less hand fatigue.
- Grips included.

### HANDLEBAR PAD

REV Gen5, Neo, REV Gen4 – Vehicles without grab handle — **860201581**




### HANDLEBAR MUFFS

Does not fit vehicles with large handlebar pad
Fits with all handguards 2015 and up — **860201144***




- Ultra-warm handlebar muffs with fleece liner.
- Designed for extreme cold conditions.
- Easy to remove in warmer weather.
- Can be used on handlebars with or without handguards and mirrors.
- Inner skeleton allows muffs to keep their shape and gives more space for hand movement.
- Transparent section allows visibility and easy manipulation of control switches.

*Note: Never use handlebar muffs with finger throttle lever.*

### NEW HANDLEBAR MUFFS

REV Gen5, Neo, REV Gen4, (except Grand Touring 2016 and up) — **860202207**



- Ultra-warm muffs with faux-fur liner for extreme cold conditions.
- Thermoformed construction allows muffs to keep their shape and provides more space for hand movement.
- Robust attachment system with magnetic opening and closure.
- Easy to install and remove with gloves on.
- Large transparent section allows visibility of control switches.

*Note: Never use handlebar muffs with finger throttle lever.*

### BRAKE RESERVOIR GUARD

REV Gen5 (Deep Snow), Summit Neo, REV Gen 4 Summit and Freeride — **860202519**



- Increases impact protection for the brake reservoir.
- Window to see fluid level.
- Cast aluminum construction.
- Detailed technical finish.

### DEEP SNOW PERFORMANCE GRIPS

Fits with Performance Small Diameter Handlebar — **860202096**



- Aggressive pattern for extra grip.
- 20 mm (0.79 in) inner diameter grip.

*While supplies last.



### TRAIL PERFORMANCE GRIPS

REV Gen5, Neo, REV Gen4, XM, XS, XU — **860201802**



- Aggressive pattern for extra grip.
- 22 mm (0.87 in) inner diameter grip.
- Doesn't fit on Performance Small Diameter Handlebar (860201974).

# MIRRORS

### PIVOTING MIRROR KIT FOR HANDGUARDS

Vehicles with Transparent Handguards or Flexible Handguards — **860200893**



- Perfectly integrated design and style.
- Mirrors fold away when not in use for easy storage or when covering vehicle.
- Sold in pairs.

### WINDSHIELD-MOUNT MIRRORS

REV Gen5, Neo, REV Gen4 with medium and higher windshields — **860201285**



- Mirror shape creates an integrated look.
- Mounts on medium and higher windshield side deflectors and can be adjusted for 1-up or 2-up riding.
- Mirrors can fold away when not in use for easy storage or when covering vehicle.

### WINDSHIELD-MOUNT MIRRORS

REV-XU, XR (with extra high one-piece windshield) — **517305787**



- 3" (7.6 cm) round reflector with adjustable angle.

### MIRROR KIT

REV-XM, XS, XP, XR, XU (with medium and higher windshield side deflectors) — **860200694**



- Windshield extension mount design.
- Sold in pairs.

### MIRROR KIT

REV-XM, XS (except 1200) — **860200607**



- Side panels mount design.
- Sold in pairs.
- Premarked side panels make installation easier.

### MIRROR KIT

REV-XP, XR, XU Tundra — **860200693***



- Side panels body mount design.
- Sold in pairs.

*While supplies last.

# ADJUSTABLE RISERS & EXTENSION KITS

### // ADJUSTABLE RISERS

- Instantly modify your handlebar height to adapt to changing riding conditions.
- Utilize the lower position for trail/sit-down riding: extend to maximum height in seconds for stand-up riding.
- No tools required to make the adjustment, just flip the lever.
- Patent pending US20150360713A1.
- Work with all stock cable except MXZ/Renegade/Backcountry 2017–2018.

### // EXTENSION KIT

- Handlebar Extension Kit to fit all riding styles.







| | | | ADJUSTABLE RISERS | | | | EXTENSION KITS | | | | | | | | FORWARD ADJUSTABLE RISER |
|---|---|---|---|---|---|---|---|---|---|---|---|---|---|---|---|
| | | | 860201834 | 860201549 | 860201276 | | 860201944 | 860201427 | 860201718 | 860201632 | 860201428 | 860201560 | 860201392 | 860201320 | 860201836 |
| MODELS | PACKAGES | ENGINES | (125-165 mm) | (150-210 mm) | (175-235 mm) | | (95 mm) | (120 mm) | (145 mm) | (165 mm) | (190 mm) | (210 mm) | (235 mm) | (120 mm) (riser) | (45 mm) (extension) |
| SUMMIT | (X, SP and Edge) with 165 mm riser (2018 and up) | 600R, 850 ETEC | 860201880 | | 512061066 | | 860201880 | 860201880 | | | | | 512061066 | | |
| | (X and SP) with 190 mm riser (2017) | 600R, 850 ETEC | 860201880 | | | | 860201880 | 860201880 | 512061224 | | | | | | |
| | (X package EXPERT) with 120 mm riser | 600R, 850 ETEC | | 512061224 | 512061066 | | | | | | 512061066 | 512061066 | 512061066 | | |
| SUMMIT NEO | Premium and Base with 120 mm riser | 600 EFI | | | | | | | | | | | | | |
| FREERIDE | 137-146" with 145 mm riser (2020 and prior) | 600R, 850 ETEC | 860201880 | | 512061066 | | 860201880 | 860201880 | | | | | 512061066 | | |
| | 146-154-165" with 165 mm riser | 600R, 850 ETEC | 860201880 | | 512061066 | | 860201880 | 860201880 | | | | | 512061066 | | |
| EXPEDITION | (SE) with 120 mm *Forward Adjustable riser* | 600R, 850 ETEC | | 512061224 | 512061066 | | | | | | 512061066 | 512061066 | 512061066 | | |
| | | 600 ACE, 900 ACE, 900T, 900T D | | | | | | | | | | | | | |
| | | 900 Turbo R | | | | | | | | | | | | | |
| | (Sport, LE, Xtreme, SWT) with 145 mm riser | 600 EFI | | | | | 512061367 | 512061367 | | | | | | 512061367 | |
| | | 600R, 850 ETEC | 860201880 | | 512061066 | | 860201880 | 860201880 | | | | | 512061066 | 860201880 | 860201880 |
| | | 600 ACE, 900 ACE, 900T, 900T D | | | | | | | | | | | | | |
| | | 900 Turbo R | | | | | | | | | | | | | |
| SKANDIC | (WT, SWT and Sport) with 145 mm riser | 600 EFI | | | | | 512061367 | 512061367 | | | | | | 512061367 | |
| | | 600R, 850 ETEC | 860201880 | | 512061066 | | 860201880 | 860201880 | | | | | 512061066 | 860201880 | 860201880 |
| | | 600 ACE, 900 ACE, 900T, 900T D | | | | | | | | | | | | | |
| TUNDRA | (LT and Sport) with 145 mm riser | 600 EFI | | | | | 512061367 | 512061367 | | | | | | 512061367 | |
| | | 600 ACE, 900 ACE, 900T, 900T D | | | | | | | | | | | | | |
| BACKCOUNTRY | (Backcountry, X, X-RS, Sport) with 120 mm riser | 600R, 850 ETEC | 860201880* | 512061224 | 512061066 | | | | 860201880* | 860201880* | 512061066 | 512061066 | 512061066 | | 860201880* |
| RENEGADE | (Adrenaline, Enduro and Sport) with 120 mm riser | 600 EFI | | | | | | | | | | | | | |
| | | 600R, 850 ETEC | 860201880* | 512061224 | 512061066 | | | | 860201880* | 860201880* | 512061066 | 512061066 | 512061066 | | 860201880* |
| | | 600 ACE, 900 ACE, 900T, 900T D | | | | | | | | | | | | | |
| | | 900 Turbo R | | | | | | | | | | | | | |
| | (X and X-RS) 137" with 120 mm *Forward Adjustable riser* | 600R, 850 ETEC | 860201880* | 512061224 | 512061066 | | | | 860201880* | 860201880* | 512061066 | 512061066 | 512061066 | | 860201880* |
| | | 900 Turbo R | | | | | | | | | | | | | |
| MXZ | (TNT and Blizzard) with 120 mm riser (2020 and prior) | 600R, 850 ETEC | 860201880* | 512061224 | 512061066 | | | | 860201880* | 860201880* | 512061066 | 512061066 | 512061066 | | 860201880* |
| | (X and X-RS ) with 120 mm *Forward Adjustable riser* (2020 and prior) | 600R, 850 ETEC | 860201880* | 512061224 | 512061066 | | | | 860201880* | 860201880* | 512061066 | 512061066 | 512061066 | | 860201880* |
| | (Blizzard and X-RS) with 90 mm riser (2023) | 600R, 850 ETEC | | 512061224 | 512061066 | | | | | | 512061066 | 512061066 | 512061066 | | |
| | (Sport) with 120 mm riser | 600 EFI | | | | | | | | | | | | | |
| MXZ NEO | Premium and Base with 120 mm riser | 600 EFI | | | | | | | | | | | | | |
| GRAND TOURING | (Sport) with 120 mm riser | 600 ACE, 900 ACE, 900T, 900T D | | | | | | | | | | | | | |
| | (Limited) with 120 mm *Forward Adjustable riser* | 600R, 850 ETEC | | 512061224 | 512061066 | | | | | | 512061066 | 512061066 | 512061066 | | |
| | | 600 ACE, 900 ACE, 900T, 900T D | | | | | | | | | | | | | |
| | (LE) with 120 mm *Forward Adjustable riser* | 600 ACE, 900 ACE, 900T, 900T D | | | | | | | | | | | | | |
| | | 900 Turbo R | | | | | | | | | | | | | |

*Stock on vehicle.*
*No further requirement.*
*Must order indicated cable.*
*No fit, no adequate cable available.*
** Only for 2017 and 2018.*

## ADJUSTABLE RISERS & EXTENSION KITS

### ADJUSTABLE RISER FOR STRAIGHT HANDLEBAR (REV-XS, XM, XP)



| | |
|---|---|
| MXZ and Renegade with 4.5" (115 mm) or 5.1" (130 mm) stock riser 2013 and up[†] | **860201116** • Black / Aluminum |
| Backcountry (2011 and up) with 6.3" (160 mm) riser block[††] | **860200634** • Black / Aluminum |
| Summit SP, REV-XU Skandic—vehicles with 8" (205 mm) riser block[†††] | **860200972** • Black / Aluminum |

- [†]Adjustable length: 4.7" to 6.3" (120 mm to 160 mm) high.
- [†]Requires steering pad (506152541) for MXZ, Renegade X-RS and Grand Touring XS.
- [††]Adjustable length: 5.1" to 8" (130 mm to 205 mm) high.
- [†††]Adjustable length: 7.3" to 9.8" (185 mm to 250 mm) high.

### ADJUSTABLE RISER FOR TAPERED HANDLEBAR (REV-XS, XM, XP)

*(Not illustrated)*

| | |
|---|---|
| Summit X, Freeride, Expedition XU—vehicles with 5.1" (130 mm) riser block | **860200973** • Black / Aluminum |

- Works with all stock cables and wiring.
- For REV-XP platform; requires Steering Pad (506152717) (not included).
- Adjustable length: 4.5" to 6.9" (115 mm to 175 mm) high.
- Brake line (507032535) required for Freeride 2011 only. To be ordered separately.

### EXTENSION KIT FOR STRAIGHT HANDLEBAR



| | |
|---|---|
| REV-XS (except Grand Touring and Expedition), XR, XP, XU Tundra | **860200820** • 6.3" (160 mm) |
| REV-XS Renegade Backcountry (2011 and up) with 6.3" (160 mm) riser block | **860200821** • 8" (205 mm) |
| REV-XM Summit SP, REV-XU Skandic and Tundra—vehicles with 8" (205 mm) riser block | **860200822** • 9.8" (250 mm) |

- Handlebar Extension Kit to fit all riding styles.
- Works with all stock wiring and cables.



# LED LIGHTS

### NEW AUXILIARY LED LIGHT



REV Gen5 (Deep Snow), Summit Neo, REV Gen4 Summit and Freeride — **860202429**

- Riser mounted adjustable auxiliary light for deep snow sleds.
- Provides 1375 extra lumens of light.
- Weighs 540 grams.
- Flips up when needed and folds down out of the way when not in use to avoid damage.
- Integrated switch automatically shuts light off when folded down.
- Operates with the high beam switch.
- Compatible with only ultra-low windshield on REV Gen4.
- Compatible with Tall and Short Riser.
- Required Harness (515179306) on REV Gen4 Summit and Freeride and Summit Neo.
- Not compatible with glovebox extensions 860202072 and 860201249 on REV Gen 4.
- Not compatible with glovebox extension 860202501 on REV Gen 5.

### NEW AUXILIARY LED LIGHT HARNESS

*(Not illustrated)*

Summit Neo, REV Gen4 (Summit and Freeride) — **515179306**

- Required for Auxiliary LED Light 860202429 use on REV GEN4 Summit and Freeride.

### NEW AUXILIARY LED WIDE LIGHT



REV Gen5 (Trail) — **860202428**

- Integrated design for factory look.
- LED lights add 2,000 additional lumens in an intense, super-wide foglight-type pattern.
- Covers the dark zone directly in front of the vehicle and to the sides.
- Easy to install with a simple plug-and-play hook-up.

### NEW AUXILIARY HI BEAM



REV Gen5 (Trail) — **860202430**

- LED lamps add 2,752 additional lumens of Hi-Beam light wider and lower than the stock Hi-Beam.
- Easily to install in the nose with a simple plug-and-play hook-up.
- Operates with in tandem with the stock Hi-Beam Switch.

### AUXILIARY LED LIGHT



REV-XM, XS (except Expedition Sport) — **860201235***

- 10 LED lamps provide more than 2,100 additional lumens in an intense, super-wide foglight-type pattern.
- Three-position OFF-ON-HI switch gives you the option of riding with these lights off, always on or only when switching to your high beams.
- Say goodbye to sacrificing close range lighting when switching to high beams.
- Easily installs below stock headlight with a simple plug-and-play hook-up.

### AUXILIARY LED LIGHT



| | |
|---|---|
| REV Gen4 (Wide) | **860201650*** |
| Neo, REV Gen4 (Narrow) | **860201818** |

- 8 LEDs provide more than 2,500 additional lumens for an intense super-wide foglight-type pattern.
- Say goodbye to sacrificing close range lighting when switching to high beams.
- Easily installs on hood with a simple plug-and-play hook-up.
- Dynamic scoop design integrates perfectly with REV Gen4 platform.
- Not compatible with One-Piece Lightweight Hood.

**Auxiliary Light Bracket Kit (860202315) required for installation on 2-stroke models with air radiator.*

### HIGH BEAM AUXILIARY LED LIGHTS



Neo, REV Gen4 — **860201651**

- Increases considerably the stock high beam output.
- Light covers more distance for great night visibility.
- Works with existing Auxillary LED Lights (860201818, 860201650).
- Not compatible with One-Piece Lightweight Hood.

**While supplies last.*

## LED LIGHTS

### SIGNATURE LED LIGHTS FOR HANDGUARDS

REV Gen5, Neo, REV Gen4, with Transparent or Flexible Handguards — **860201587**



- Delivers a unique look at night.
- Replaces stock handguard cap with LED light.
- Includes wiring harness.
- Sold in pairs.

### FRONT BUMPER LED WORKING LIGHTS

REV Gen4 (Wide) except Tundra and Skandic — **860201771**



- Adjustable work lights.
- Perfect for low light tasks.
- Point the light where you need it.
- Used with Full Wrap-Around Bumpers (860201676, 860201822, 860202027).
- Sold in pairs with toggle switch.
- Not compatible with Full Wrap-Around Front Bumpers (860201982, 860201983, 860201984).

### LinQ WORKING LIGHT

Neo, REV Gen4 — **860201849**



- Convenient LinQ mount with swivel allows you to adjust as needed.
- Ultra-bright 1,000 lumens output.
- Works when at idle.
- Requires 12V outlet (860201888) for REV Gen4 (Wide) 20" and 24" and 12V outlet (860202069) for Neo and REV Gen4 (Narrow) 16".

# BUMPERS, HITCHES & WINCHES

## BUMPERS

### NEW ADVENTURE FRONT PLATE

REV Gen5, Neo, REV Gen4 (except Skandic and Tundra)

- **860202563** • Manta Green
- **860202328** • Black
- **860202411** • Neo Yellow
- **860202410** • Spartan Red



- Between a bumper and a skid plate.
- Made of stacked lightweight aluminum plates.
- Adds a visual impact and extra protection.
- Requires XC Cast or Heavy-Duty Front Bumper.
- Required for Full Wrap-Around Front Bumpers installation.

### NEW XC CAST FRONT BUMPER

REV Gen5, Neo, REV Gen4 (except Skandic and Tundra) — **860202327**



- Add extra protection and attitude with this bumper.
- Lightweight cast aluminum heat treated construction.
- Works with or without the Adventure Front Plate.
- Works with all skid plates.

### ADVENTURE FRONT BUMPER

REV Gen4 (Narrow)

- **860201511** • Black / White*
- **860201474** • White / Black*
- **860201599** • Green / Black*
- **860201681** • Black / Black*
- **860201898** • Lava Red / Black*
- **860201897** • Octane Blue / Black*
- **860202135** • Yellow / Black*



- Made of stacked lightweight aluminum plates.
- Makes a visual impact and provides added protection.
- Not compatible on vehicle equipped with SAS suspension.

*While supplies last.



### FRONT BUMPER

Neo, REV Gen4 (Narrow)

- **860201445** • White*
- **502007460** • Black



- Easy-install bumper changes the appearance of your sled in minutes.

### FRONT BUMPER

REV-XM, XS

- **860201175** • Sunburst Yellow
- **860201168** • Orange Crush
- **860201167** • Black
- **860201172** • Fusion Red*
- **860201173** • Manta Green



- Easy-install bumper changes the appearance of your sled in minutes.

### XC FRONT BUMPER

REV-XM, XS — **860201318** • Black — **860201099** • Aluminum



- The ultimate front protection for your sled, providing additional front and lateral protection.
- Large center grab area for additional leverage.
- Heavy-duty performance with lightweight aluminum construction.

### FULL WRAP-AROUND FRONT BUMPER

| | |
|---|---|
| REV Gen4 (Wide) 24" Skandic | **860201984** |
| REV Gen4 (Wide) 16" Tundra | **860201982*** |
| REV Gen4 (Wide) 20" Skandic | **860201983**** |



- Modular full wrap-around front bumper system.
- Tubular steel construction for strength on mid section.
- Protects side panels while still allowing access to them.

*Heavy-Duty Front Bumper (860202198) required for installation.*
***Requires Heavy-Duty Front Bumper (860202198) for Skandic Sport.*

### SIDE PANEL PROTECTORS

REV Gen4 (Wide) Tundra, 20" Skandic — **860202199**



- Use with Full Wrap-Around Front Bumper (860201982 or 860201983).
- Strong steel construction.
- Protects side panels and hood.
- Both swing out-of-the-way for easy access.
- Clean, rugged look.

### FULL WRAP-AROUND FRONT BUMPER

| | |
|---|---|
| REV Gen4 (Wide) 24" Expedition | **860202027*** |
| REV Gen4 (Wide) 20" Expedition | **860201822** |
| REV Gen4 (Wide) 16" | **860201676**** |



- Modular full wrap-around front bumper system.
- Lightweight tubular steel construction for strength on mid section.
- Protects front and side panels while still allowing access to them.
- Requires Lightweight Y-Shaped Aluminum Bumper (860201881) and Heavy-Duty Front Bumper (860201819) for installation.

*Not compatible with Side Panel Protectors (860201677).*
***Not compatible with Driver Footrest (860201932, 860201613, 860201614).*

### SIDE PANEL PROTECTORS

REV Gen4 (Wide) 16", REV Gen4 Expedition 20" — **860201677**



- Attaches to Full Wrap-Around Front Bumper (860201822 and 860201676).
- Lightweight aluminum construction.
- Provides protection to side panels and hood.
- Swings out-of-the-way for easy access.
- Rugged look.

*While supplies last.

## BUMPERS

### LIGHTWEIGHT Y-SHAPED ALUMINUM BUMPER

| | |
|---|---|
| REV Gen4 (Wide) (except Skandic and Tundra) | **860201881*** |



- Aluminum construction.
- Offers great protection from frontal impacts by rocks, trees and other debris.
- Required for the installation of Full Wrap-Around Front Bumpers (860201822, 860201676 and 860202027).

### HEAVY-DUTY FRONT BUMPER

| | |
|---|---|
| REV Gen4 (Wide) (except Skandic and Tundra) | **860201819** |
| REV Gen4 (Wide) Tundra and Skandic | **860202198** |



- Reinforced lightweight aluminum construction.
- Required for the installation of Full Wrap-Around Front Bumpers (860201676, 860201822 and 860202027).
- Standard on REV Gen4 (Wide) Renegade Enduro, Expedition LE and Expedition SE.

### 1¼" TRAILMAKER FRONT BUMPER RECEIVER

| | |
|---|---|
| REV Gen4 (Wide) 20" and 24" (except Skandic) | **860201825** |



- Receiver for use with Full Wrap-Around Front Bumper (860201822 and 860202027).
- Allows use of 1¼" draw bar on front of sled.

### HEAVY-DUTY FRONT BUMPER WITH 2" RECEIVER

| | |
|---|---|
| REV-XU Skandic | **860200987** |



- Increases front protection.
- Integrated 2" Multi-Mount Receiver.
- Works with 2" Multi-Mount Drawbar (860201117) and Multi-Mount Winch (860200992).
- Note: Not compatible with Prefilter Grille Kit (860201152).

### EXTRA FRONT BUMPER

| | |
|---|---|
| REV-XU Expedition | **860200350** |



- Heavy-duty front bumper.

### FULL WRAP-AROUND FRONT BUMPER

| | |
|---|---|
| REV-XU Tundra | **860200572*** |



- Full 1.25" (3.8 cm) diameter heavy-duty steel wrap-around model.
- Delivers added protection to front of sled and side panels.
- Attaches to existing bumper and footrests.

### EXTRA FRONT BUMPER

| | |
|---|---|
| REV-XU Skandic | **860200561** |



- Heavy-duty front bumper.

*While supplies last.



### NEW ADVENTURE REAR BUMPER

| | |
|---|---|
| Neo – 120" | **860202224** • Neo Yellow/Black |



- Stunning style that matches the Adventure Front Plate.
- Constructed with a combination of lightweight extruded and heat treated cast aluminum for strength – like the XC Cast Bumper.

### NEW ADVENTURE REAR BUMPER 16"

| | | |
|---|---|---|
| REV Gen5, REV Gen4 – 129" | **860202412** • Black / Black<br>**860202396** • Neo Yellow | **860202540** • Spartan Red |



- Stunning style that matches the Adventure Front Plate.
- Constructed with a combination of lightweight extruded and heat treated cast aluminum for strength – like the XC Cast Bumper.

### NEW ADVENTURE REAR BUMPER 16"

| | | |
|---|---|---|
| REV Gen5, REV Gen4 – 137" and 146" with short tunnel | **860202397** • Black / Black<br>**860202398** • Neo Yellow | **860202539** • Spartan Red |



- Stunning style that matches the Adventure Front Plate.
- Constructed with a combination of lightweight extruded and heat treated cast aluminum for strength – like the XC Cast Bumper.
- Compatible with LinQ Snowboard/Ski.
- Available in all tunnels lengths and multiple colors.

### NEW ADVENTURE REAR BUMPER 16"

| | | |
|---|---|---|
| REV Gen5, Neo, REV Gen 4 – 146" and 154" with short tunnel | **860202400** • Black / Black<br>**860202560** • Manta Green | **860202401** • Neo Yellow<br>**860202543** • Spartan Red |



- Stunning style that matches the Adventure Front Plate.
- Constructed with a combination of lightweight extruded and heat treated cast aluminum for strength – like the XC Cast Bumper.
- Compatible with LinQ Snowboard/Ski.
- Available in all tunnels lengths and multiple colors.

### NEW ADVENTURE REAR BUMPER 16"

| | | |
|---|---|---|
| REV Gen5, REV Gen4 – 154" and 165" with short tunnel | **860202340** • Black / Black<br>**860202561** • Manta Green | **860202402** • Neo Yellow<br>**860202542** • Spartan Red |



- Stunning style that matches the Adventure Front Plate.
- Constructed with a combination of lightweight extruded and heat treated cast aluminum for strength – like the XC Cast Bumper.
- Compatible with LinQ Snowboard/Ski.
- Available in all tunnels lengths and multiple colors.

### NEW ADVENTURE REAR BUMPER 16"

| | | |
|---|---|---|
| REV Gen5, REV Gen4 – 165" and 176" with short tunnel | **860202403** • Black / Black<br>**860202562** • Manta Green | **860202404** • Neo Yellow<br>**860202541** • Spartan Red |



- Stunning style that matches the Adventure Front Plate.
- Constructed with a combination of lightweight extruded and heat treated cast aluminum for strength – like the XC Cast Bumper.
- Compatible with LinQ Snowboard/Ski.
- Available in all tunnels lengths and multiple colors.

### ADVENTURE REAR BUMPER 16"

| | |
|---|---|
| REV Gen4 – 129" | **860202317** • Black / Black* |



- Matches the Adventure front bumper.
- Stunning style and construction.
- Made of lightweight stacked aluminum plates.

### ADVENTURE REAR BUMPER 16"

| | |
|---|---|
| REV Gen4 137" (except Renegade Enduro and Renegade Sport) | **860201478** • White / Black*<br>**860201597** • Green / Black* |



- Matches the Adventure front bumper.
- Stunning style and construction.
- Made of lightweight stacked aluminum plates.
- Doesn't fit REV Gen4 146" short tunnel.

*While supplies last.

## BUMPERS

### ADVENTURE REAR BUMPER 16”

| | | |
|---|---|---|
| REV Gen4 137” regular tunnel and 146” short tunnel | | **860202149** • Black / Black* |



- Matches the Adventure front bumper.
- Stunning style and construction.
- Made of lightweight stacked aluminum plates.

### ADVENTURE REAR BUMPER 16”

| | | |
|---|---|---|
| REV Gen4 146” and 154” with short tunnel | **860202150** • Black / Black | **860202157** • Black / Lava Red* |



- Matches the Adventure front bumper.
- Stunning style and construction.
- Made of lightweight stacked aluminum plates.

### ADVENTURE REAR BUMPER 16”

| | | |
|---|---|---|
| REV Gen4 154” and 165” with short tunnel | **860202151** • Black / Black | **860202159** • Black / Lava Red*<br>**860202158** • Octane Blue / Black* |



- Matches the Adventure front bumper.
- Stunning style and construction.
- Made of lightweight stacked aluminum plates.

### ADVENTURE REAR BUMPER 16”

| | | |
|---|---|---|
| REV Gen4 165” and 175” with short tunnel | **860202152** • Black / Black | **860202161** • Black / Lava Red*<br>**860202160** • Octane Blue / Black* |

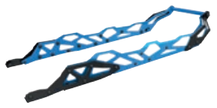

- Matches the Adventure front bumper.
- Stunning style and construction.
- Made of lightweight stacked aluminum plates.

### HEAVY-DUTY REAR BUMPER

| | |
|---|---|
| REV Gen5, Neo, REV Gen4 16”–146” | **860201610** • Black |
| REV Gen5, REV Gen4 16”–154” | **860201726** • Black |
| REV Gen5, REV Gen4 16”–165” | **860201727** • Black |
| REV Gen5, REV Gen4 16”–175” | **860201467** • Black* |



- Premium finish heavy-duty aluminum bumper for REV Gen4 platform.
- Does not detract from deep snow performance.
- Cannot be used on vehicles with short tunnel.

### REAR BUMPER

| | | |
|---|---|---|
| REV Gen5, REV Gen4 (Narrow) 129” | **518328745** • Black | **518329479** • White |
| REV Gen5, REV Gen4 (Narrow) 137” | **518328746** • Black | |
| REV Gen5, Neo, REV Gen4 (Narrow) 146” | **518329553** • Black | |
| REV Gen5, REV Gen4 (Narrow) 154” | **518328501** • Black | **518329152** • White* |
| REV Gen5, REV Gen4 (Narrow) 165” | **518328697** • Black | |
| REV Gen4 (Narrow) 175” | **518328834** • Black | |
| REV Gen4 (Wide) – Tundra 137” | **518330033** • Black | |



- Easy-install bumper changes the appearance of your sled in minutes.
- Cannot be used on vehicles with short tunnel.

### REAR BUMPER

| | |
|---|---|
| REV-XP, XR, XS (120” and 137”) | **518325481** • Black |



- Easy-install bumper changes the appearance of your sled in minutes.

*While supplies last.



### XU HEAVY-DUTY REAR BUMPER

| | |
|---|---|
| XU Skandic SWT, XU Expedition SWT | **860201106** • Aluminum |
| XU Skandic WT, Expedition SE, LE, Xtreme 2019 and prior | **860200991** • Aluminum* |



- Ready to accept 2” Receiver (860201062).
- Essential for modular towing options.
- Provides complete rear protection.
- Works hard during intense use.
- Features convenient hand-gripping area.

### HITCH REAR BUMPER

| | |
|---|---|
| REV Gen5, REV Gen4 16” – 129” | **860201433** • Black |
| REV Gen5, REV Gen4 16” – 137” | **860201471** • Black |
| REV Gen5, Neo, REV Gen4 16” – 146” | **860201612** • Black |
| REV Gen5, REV Gen4 16” – 154” | **860201250** • Black |
| REV Gen5, REV Gen4 16” – 165” | **860201424** • Black |
| REV Gen4 16” – 175” | **860201472** • Black |



- Required for hitch use.
- Easy attachment with no cutting or drilling.
- Can be used with the Lin0 Snowboard/Ski Rack (860202191).
- Does not fit with vehicles with short tunnel.

### HITCH REAR BUMPER FOR SHORT TUNNEL

| | |
|---|---|
| REV Gen5 (Deep Snow) short tunnel 146” | **860202647** |
| REV Gen5 (Deep Snow), REV Gen4 short tunnel Summit Edge 154” | **860202646** |
| REV Gen5 (Deep Snow), REV Gen4 short tunnel Summit Edge 165” | **860202648** |
| REV Gen5 (Deep Snow), REV Gen4 short tunnel Summit Edge 175” | **860202649** |
| REV Gen4 short tunnel Summit and Freeride 146” (except Summit Edge) | **860202213** |
| REV Gen4 short tunnel Summit and Freeride 154” (except Summit Edge) | **860202214** |
| REV Gen4 short tunnel Summit and Freeride 165” (except Summit Edge) | **860202215** |
| REV Gen4 short tunnel Summit 175” (except Summit Edge) | **860202216** |



- Required for hitch use and towing.
- Easy mounting with no cutting.
- Also reinforces the tunnel.
- Can be used with the Lin0 Snowboard/Ski Rack (860202191).

### HITCH REAR BUMPER

| | |
|---|---|
| REV-XP, XM – 146” | **860200953** • Black |
| REV-XP, XM – 154” | **860200954** • Black |
| REV-XP, XM – 163” | **860200955** • Black |
| REV-XP, XM – 174” | **860201135** • Black |



- Heavy-duty aluminum bumper for hitch applications.
- Easy attachment with no cutting or drilling.
- Doesn’t fit Grand Touring SE, LE.

### HITCH REAR BUMPER

| | |
|---|---|
| REV-XS, XR, XP – 120” and 137” | **860200952** • Black |
| REV-XS MXZ – 129” | **860201306** • Black |
| REV-XS Renegade X-RS, XM Freeride, XU Tundra – 137” | **860201307** • Black |
| REV-XS, XP, XR, XU Tundra – 120” and 137” | **860200803** • Black* |



- Heavy-duty aluminum bumper for hitch applications.
- Easy attachment with no cutting or drilling.
- Doesn’t fit Grand Touring SE, LE.

*Does not fit on 137” Freeride.

### HEAVY-DUTY HITCH REAR BUMPER

| | |
|---|---|
| REV Gen4 (Wide) 24” | **860201942** |
| REV Gen4 (Wide) 20” | **860201795** |



- Essential for modular towing options.
- Provides complete rear protection.
- Features convenient hand-gripping area.
- Adds towing capacity of 300 lb (136 kg), up to 1,500 lb (680 kg) total.
- 1¼” hitch receiver included.

*While supplies last.

## HITCHES

### 1 ¼" FRONT RECEIVER

REV Gen4 (Wide) Skandic and Tundra — **860201991**



- Receiver for use with wrap-around front bumpers for LTS suspension models.
- Allows use of 1 ¼" draw bar on front of sled.

### C-TYPE HITCH

REV Gen5, Neo, REV Gen4 16", XP, XR, XS, XM, XU Tundra — **860201381**



- Heavy-duty C-type hitch works in conjunction with hitch rear bumper.

### TONGUE TYPE HITCH

REV Gen5, Neo, REV Gen4 16", XP, XR, XS, XM, XU Tundra — **860200902**



- Heavy-duty tongue type hitch works in conjunction with hitch rear bumper.

### HEAVY-DUTY TONGUE HITCH

REV Gen4 20" and 24", XU 20" and 24" — **860201023** • Grey



- Cast stainless steel construction.
- Mounting pattern for Heavy-Duty Hitch Rear Bumpers and Multi-Mount Drawbars.
- Fits on Heavy-Duty Rear Bumper 20" and 24" (860201795, 860201942)
- Fits on Multi-Mount Drawbar.

### HITCH TONGUE

**511000521**



- Easily transforms the C-Type Hitch (860201381) into a tongue-type hitch.

### 1¼" TRAILER HITCH

REV Gen4 Expedition Xtreme and Skandic Sport — **860202062**



- Allowing quick switching of towing hook-ups or winch use.
- Stock on REV Gen4 Expedition LE, SE.

### 1¼" MULTI-MOUNT DRAWBAR WITH NEW HITCH PIN

Fits on 1 ¼" Trailer Hitch (860202062) and Front Receiver (860201991, 860201825) — **860201804**



- Allows quick installation and removal of different towing platforms.
- Use with tongue or J-Hook style hitches as needed.

### 2" MULTI-MOUNT DRAWBAR

Fits on XU with Rear 2" Receiver (860201062) or Heavy-Duty Front Bumper (860200987) — **860201117**



- Allows quick installation and removal of different towing platforms.
- Compatible with J-Hitch (860201142) and Heavy-Duty Tongue Hitch (860201023).



### FRONT & REAR HITCH DRAWBAR

Fits on XU Rear 2" Receiver (860201062) or Heavy-Duty Front Bumper (860200987) — **715000972**



- Fits 2" receiver hitch.
- Hitch ball not included.

### J-HITCH

REV Gen4 20" and 24", XU 20" and 24" — **860201142**



- Fits on Heavy-Duty Rear Bumper 20" and 24" (860201795, 860201942).
- Fits on Multi-Mount Drawbar (860201804, 860201117).
- Spring-loaded latch system for quick, secure hook-up.

### 2" RECEIVER FOR HEAVY-DUTY REAR BUMPER

Fits on XU Heavy-Duty Rear Bumpers WT (860200991) or SWT (860201106) — **860201062**



- Easy installation.
- Standard 2" size for wide compatibility.
- Allows quick switching of towing hook-ups or winch use.
- Does not fit with stock tongue hitch 2016–2018.

## ACCESSORIES

### HD 2500 WINCH

REV Gen4 (Wide) 20" and 24" — **860202331**




- Ergonomic clutch handle.
- Rugged all-steel gears and bushings, provides more torque and longer life.
- Automatic 100% load-holding brake.
- Sealed solenoid for all weather protection.
- Weather-sealed handlebar mounted switch.
- Corded 10 ft. (3m) weather sealed hand-held remote.
- Pulling strength capability of 2,500 lb (1,134 kg).
- 50 ft. of 3⁄16" (15.2 m of 4.8 mm) wire steel cable.
- Heavy-duty 4-way roller fairlead.
- EC compliant.
- Fits Heavy-Duty Hitch Rear Bumper (860201795) and 1 ¼" Trailer Hitch Receiver.

### HAWSE GUIDE

**860201143**



- Replaces Roller Fairlead for longer cable life.
- For use with synthetic cable only.
- Replaces Roller Fairlead when Synthetic Cable (715004254) is installed.

# PROTECTION & REINFORCEMENT

## REV GEN5, NEO & REV GEN4

### NEW SKID PLATE

| | | |
|---|---|---|
| REV Gen5 (Deep Snow) | **860202417** • Black<br>**860202418** • Yellow | **860202603** • Catalyst Grey<br>**860202423** • Manta Green |



- Narrower than a Full Body, but wider than an Extreme skid plate in size – good blend of protection and agility.
- Injection molded process provides perfect fit and easier installation with a clean look. Smooth surfaces also reduce drag.
- 4-mm thick high impact resistance polypropylene for durability.
- Attachment kit included.
- Chassis is premarked for easy installation.

### NEW FULL BODY SKID PLATE

| | |
|---|---|
| REV Gen5 (Trail) | **860202420** • Black<br>**860202421** • Neo Yellow |



- Injection molded process delivers clean lines, a perfect fit and easier installation. Smooth surfaces reduce drag.
- 4 mm thick high impact resistance polypropylene for durability.
- Attachment kit included.
- Chassis is premarked for easy installation.

### FULL BODY SKID PLATE

| | | |
|---|---|---|
| Neo, REV Gen4 (Narrow) | NEW **860202604** • Neo Yellow<br>**860201583** • Octane Blue<br>**860201618** • Manta Green<br>**860201227** • Black | **860201441** • Sunburst Yellow<br>**860201442** • Orange Crush<br>**860201443** • White<br>**860201809** • Lava Red |



- Injection molded process delivers clean lines, a perfect fit and easier installation. Smooth surfaces reduce drag.
- 4 mm thick high impact resistance polypropylene for durability.
- Attachment kit included.
- Chassis is premarked for easy installation.

### FULL BODY SKID PLATE

| | | |
|---|---|---|
| REV Gen4 (Wide) 16" Tundra | | **860202044** • Black |
| REV Gen4 (Wide) 20" | | **860202045** • Black |
| REV Gen4 (Wide) 24" | | **860202046** • Black |



- 3-part kit includes main center section and easily removable extensions under running boards that protect brake and chaincase.
- Made of high molecular weight polyethylene.
- Provides maximum underbelly protection.

### FULL BODY SKID PLATE

| | | |
|---|---|---|
| REV Gen4 (Wide) 16" and 20" | **860202391** • Sunburst Yellow<br>**860201847** • Lava Red<br>**860201848** • Manta Green | **860201653** • Black<br>**860201810** • White |



- Injection molded process provides smooth surface, better definition, a perfect fit and easier installation.
- For assertive riders who demand the utmost protection.
- Smooth bottom surface to reduce drag.
- 4 mm thick, high impact resistance polypropylene for durability.
- Extra wide, covers vital primary clutch, chaincase and front heat exchanger components to provide maximum underbelly protection.
- Attachment kit included.
- Chassis is premarked for easy installation.
- Except Expedition SWT, Skandic and Tundra

### FULL BODY SKID PLATE

| | |
|---|---|
| REV Gen4 (Wide) 24" Expedition SWT | **860202043** • Black |



- 3-part kit includes main center section and easily removable extensions under running boards that protect brake and chaincase.
- Made of high molecular weight polyethylene.
- Provides maximum underbelly protection.



### EXTREME SKID PLATE

| | | |
|---|---|---|
| Neo, REV Gen4 (Narrow) | **860202392** • Orange Crush<br>**860202178** • Lava Red | **860201738** • Black<br>**860202177** • Octane Blue |



- Injection molded process provides smooth surface, better definition, a perfect fit and easier installation.
- For assertive riders who demand the utmost protection.
- Smooth bottom surface to reduce drag.
- 4-mm thick, high impact resistance polypropylene for durability.
- Attachment kit included.
- Chassis is premarked for easy installation.

### RACING SKID PLATE

| | |
|---|---|
| Neo, REV Gen4 (Narrow) | **860201579** • Black |



- Injection molded process provides smooth surface, better definition, a perfect fit and easier installation.
- For assertive riders who demand the utmost protection.
- Smooth bottom surface to reduce drag.
- 4 mm thick, high impact resistance polypropylene for durability.
- Attachment kit included.
- Chassis is premarked for easy installation.

### TUNNEL RADIATOR PROTECTOR

| | |
|---|---|
| REV Gen5, REV Gen4 16"–137" (except short tunnel) | **860201830** |
| REV Gen5, Neo, REV Gen4 16"–146" (except short tunnel) | **860201831** |
| REV Gen5, REV Gen4 16"–154" (except short tunnel) | **860201832** |
| REV Gen5, REV Gen4 16"–165" (except short tunnel) | **860201833** |



- Used on vehciles equiped with front tunnel protector to provide the additional protection required with studded tracks.
- Made of aluminum.

## REV-XM & REV-XS

### EXTREME SKID PLATE

| | | |
|---|---|---|
| REV-XM, XS | **860201145** • Manta Green*<br>**860201146** • Sunburst Yellow*<br>**860200606** • Black*<br>**860200741** • Yellow* | **860200742** • Orange Crush*<br>**860201032** • Lava Red*<br>**860201033** • White* |



- Injection molded process provides better definition, a perfect fit and easier installation.
- For assertive riders who demand the utmost protection.
- Smooth bottom surface to reduce drag.
- 4 mm thick, high impact resistance polypropylene for durability.
- Attachment kit included.
- Chassis is premarked for easy installation.
- Includes marking for 4-stroke oil change cut-out.

### FULL BODY SKID PLATE

| | | |
|---|---|---|
| REV-XM, XS | **860200605** • Black*<br>**860200739** • Yellow*<br>**860200740** • Orange Crush* | **860201035** • White<br>**860201147** • Manta Green* |



- Wide shape for full protection and maximum flotation.
- Injection molded process provides better definition, a perfect fit and easier installation.
- For assertive riders who demand the utmost protection.
- Smooth bottom surface to reduce drag.
- 4-mm thick, high impact resistance polypropylene for durability.
- Extra wide, covers vital primary clutch, chaincase and front heat exchanger components to provide maximum underbelly protection.
- Attachment kit included.
- Chassis is premarked for easy installation.
- Includes marking for 4-stroke oil change cut-out.

**While supplies last.*

## EXTREME & FULL BODY SKID PLATES

### FULL BODY SKID PLATE

REV-XU Expedition SE, Xtreme, LE (2009-2019) — **860200563**



- Provides additional underbelly protection in off-trail conditions.
- Made of high molecular weight polyethylene.
- Helps glide on snow and prevents snow from sticking to the frame.
- Works with A-arm protectors.
- Standard on REV-XU Expedition SE (2009–2019).

### REAR SKID PLATE

REV-XU Expedition — **860201361**



- Extra underbelly protection.
- Protects components such as brakes and gearbox from impacts.
- High molecular weight polyethylene.
- Can be combined with Full Body Skid Plate (860200563) for maximum protection.
- REV-XU Expedition SWT not compatible with Rear Rack Extension (860200700).

### FULL BODY SKID PLATE

REV-XP — **860200287***



- High molecular weight polyethylene embossed with Ski-Doo logo.
- For assertive riders who demand the utmost protection.
- Attachment kit included.
- Chassis is premarked for easy installation.

### FULL BODY SKID PLATE

| | |
|---|---|
| REV-XU WT 2016 and up | **860201342** |
| REV-XU SWT 2016 and up | **860201343** |
| REV-XU Tundra | **860200601** |



- High molecular weight polyethylene.
- Provides maximum underbelly protection in off-trail conditions.
- Helps glide on snow and prevents snow from sticking to the frame.

### FRAME UNDERBELLY BRACE KIT / S-MODULE REINFORCEMENT KIT

REV-XM, XS, XP, XR, XU Expedition — **860200905***



- S module reinforcement, standard on 600 RS racing sled.
- Compatible with Ski-Doo skid plates.

### SKID PLATE FASTENER KIT

*(Not illustrated)*

REV-XP, XR, XS, XM — **860200808**

- Made to fit and hold your skid plate securely in place.

*While supplies last.



## REINFORCEMENT

### TUNNEL REINFORCEMENT

REV Gen4 Summit X with Expert package, Summit X and Freeride 154"–165" with tMotion Adjustable Limiter Strap (860201861) — **860201995**



- Additional strength and traction along the running board.
- Machined aluminum extrusions.
- Colors to add some style.
- Provides more support and boot traction for aggressive riders.
- Compatible with tMotion Adjustable Limiter (860201861).
- Does not fit with Remote Limiter Strap Adjuster (860201855 and 860201496).

### TUNNEL REINFORCEMENT

MXZ Neo, REV Gen4 MXZ and Renegade (except Renegade Backcountry, Backcountry X and X-RS and MXZ X-RS) — **860201584** • White* / **860201465** • Black



- Additional strength and traction along the running board.
- Machined aluminum extrusions.
- Colors to add some style.
- Provides more support and boot traction for aggressive riders.

### TUNNEL REINFORCEMENT

Summit Neo, REV Gen4 Summit SP, Backcountry, Backcountry X — **860201636** • Black / **860201730** • Octane Blue



- Additional strength and traction along the running board.
- Machined aluminum extrusions.
- Colors to add some style.
- Provides more support and boot traction for aggressive riders.
- Not compatible with tMotion Adjustable Limiter (860201861).

### TUNNEL REINFORCEMENT

REV Gen4 Summit X (except with Expert package), Freeride 154"–165" — **860201638** • Black / **860201783** • Lava Red* / **860201734** • Octane Blue*

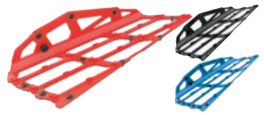

- Additional strength and traction along the running board.
- Machined aluminum extrusions.
- Colors to add some style.
- Provides more support and boot traction for aggressive riders.
- Not compatible with tMotion Adjustable Limiter (860201861).

### CHASSIS REINFORCEMENT KIT

REV-XS — **860200521** • Viper Red* / **860200813** • Aluminum* / **860200814** • Black* / **860200815** • Yellow*



- Provides additional reinforcement to your tunnel along with improved grip.
- Easy installation.
- Except Renegade Backcountry and Backcountry X

### RAIL REINFORCEMENT

REV Gen4 146" to 165" with tMotion and cMotion rear suspensions — **860201005**



- Increases rail strength and longevity.

### RAIL REINFORCEMENT

REV Gen5, REV Gen4, XM, XP 146" and up with tMotion and cMotion rear suspensions — **860201464**



- Lightweight cast aluminum construction.
- Increases rail strength and longevity.
- Can replace stock stiffner on Freeride.

*While supplies last.

# TOE-HOLDS, FOOTRESTS & KNEE PADS

## TOE-HOLDS

### REWIND COVER

Summit Neo, REV Gen4 (Narrow) Summit, Backcountry, Freeride | **860201463**



- Covers rewind handle to let your knees slide smoothly.
- Allows installation of Knee Pads (860201917).

### ADJUSTABLE TOE-HOLDS

REV Gen5 (Deep Snow), Summit Neo, REV Gen4 16" Summit, Freeride, Backcountry and Expedition 16" | **860201765**



- Die-cast aluminum part.
- Allows user to adjust toe-hold position for different riding styles and control.
- Foldable for ease floorboard access.
- Adjustable 3" (7.6 cm) rearward and 1.5" (3.8 cm) upward.
- Forward/backward and top/down adjustments.

### ADJUSTABLE TOE-HOLDS

MXZ Neo, REV Gen4 MXZ, Renegade and Grand Touring | **860201305***



- Adjustable solid toe-holds (non-folding).
- Provide 0.6" (1.5 cm) vertical and 1.6" (4 cm) horizontal adjustment range.
- Work with both size rubber shims and Lateral Footrests (860201402).

### FIXED TOE-HOLDS

REV Gen5 (Deep Snow), Summit Neo, REV Gen4 Summit, Freeride and Backcountry | **860201510**



- Fixed toe-holds for control and leverage when boondocking.

### SHIM KIT FOR TOE-HOLDS

MXZ Neo, REV Gen4 (Narrow) MXZ and Renegade | **860201408**



- Spacers in two heights (10 mm, 20 mm) let you determine how tight your boots fit the toe-holds.

### ADJUSTABLE TOE-HOLDS KIT

REV-XP, XR, XS, XU Tundra, XM (except 600 ACE and 900 ACE) | **860200743** • Aluminum*



- Kit provides easy adjustment to the toe-holds to match your riding style.

### TUNNEL GRIP PLATES

Fit all models (except Youth) | **860200164**



- Lightweight plastic grip plates for extra side boot grip in rough riding conditions.
- Developed for the 600 Race sled.
- Sold in pairs with complete hardware.

*While supplies last.



## FOOTRESTS

### DRIVER FOOTREST

MXZ Neo, REV Gen4 MXZ, Renegade, Backcountry and Grand Touring | **860201932** • Black, **860201613** • White, **860201614** • Manta Green



- Customize the fit and function of your sled.
- Offers a natural angled platform for riders that push with their feet.
- Machined aluminum extrusions in different colors, add traction and style.
- Fits with Lateral Footplates (860201402).

### FRONT FOOTREST

REV-XS, XM | **860200906**



- A must for aggressive riders.
- Sloped plate provides a relaxed ankle position during long rides.

### LATERAL FOOTPLATES

Neo, REV Gen4 (except Renegade Enduro, Grand Touring Limited and Expedition SE) | **860201402**



- Cast aluminum outer support for riders that use their feet to push in corners, or desire a more locked feel.
- Does not fit with air suspension.
- Not compatible with models equipped with SAS (Smart-Shock Semi-Active Suspension).

### REAR FOOTREST

REV Gen5, REV Gen4 (Summit SP) | **860201504**



- Additional boot grip on rear tunnel.
- Integrated design, looks and functions great.

### REAR FOOTREST KIT

REV-XM | **860200889***



- Provides additional boot grip at the rear of the tunnel when climbing.

## KNEE PADS

### KNEE PADS

Neo, REV Gen4 without manual reverse | **860201917**



- Designed for a perfect fit on REV Gen4 (Narrow).
- Provide comfort, impact absorption and extra knee grip.
- Injection molded soft material.
- Easy install with peel-off adhesive.
- REV Gen4 (Narrow): Rewind Cover (860201463) required if pull start.

### SECOND STEP KNEE PADS

REV Gen4 (Wide) 16" | **860202063**



- Designed to add extra knee grip and absorbing impacts when leaning forward in aggressive cornering situations.
- Injection molded soft material.
- Easy install with peel-off adhesive.

### MANUAL REVERSE KNEE PADS

REV Gen4 (Wide) 16" with manual reverse | **860201916**



- Provides comfort, impact protection and extra grip.
- Injection molded soft material.
- Easy install with peel-off adhesive.

*While supplies last.

# SUSPENSION & FOX† SHOCK KITS

## SUSPENSION

### REMOTE COUPLER BLOCK ADJUSTER

REV Gen4 129" and 137" with rMotion rear suspension (2020 and prior), MXZ Sport, Renegade Sport, Grand Touring Sport (2021 & up) — **860201902***

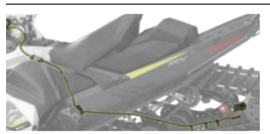

- Allows rider to attune ski-loading to current trail conditions.
- Quickly change coupler block position with a twist of the wrist.
- Go from uncoupled to your preferred coupled setting instantly.
- Coupled = less transfer, more weight on skis under acceleration.
- Uncoupled = more transfer, easier to lift skis under acceleration.
- Patent pending.

### TMOTION ADJUSTABLE LIMITER STRAP

| | |
|---|---|
| REV Gen5 (Deep Snow) | NEW 860202439 |
| REV Gen4 (Narrow) with tMotion and cMotion rear suspensions (except Freeride 146" 2020 and prior and Backcountry X-RS) | 860201861 |



- Quickly change limiter strap length by flipping a lever, to attune ride and handling to snow conditions and terrain.
- Shortening keeps the front end lower and improves track approach angle.
- Lengthening increases transfer and lifts the front end higher.
- Adjustment is equivalent to 2 holes on a conventional strap (1.3"/34 mm).
- Slim, non-intrusive design.
- 2 initial settings to choose from: holes 3 to 5 or 2 to 4 (compared to conventional strap hole positions).
- US patent 9022156.

### TMOTION ADJUSTABLE LIMITER STRAP REPLACEMENT PARTS KIT

*(Not illustrated)*

REV-XM — **860201426**

### NEW TMOTION RIGID ARM

REV Gen5 (Deep Snow) — **860202413**



- Convert a tMotion X to a fixed arm tMotion XT suspension.
- Fixed rear arm for technical riding in steep terrain.
- Improves sidehilling performance.
- More precise and predictable while sacrificing some ease and agility.

### FRONT SUSPENSION WIDENING KIT

REV Gen5 (Deep Snow), REV Gen4 Summit and Freeride with 36" RAS 3 front suspension — **860201588**



- Adjustable width 38.4"–40.1" (975–1,019 mm).
- Includes X package shock absorbers and springs.

### RAS X FRONT SUSPENSION UPGRADE KIT (WITHOUT SHOCKS)

REV Gen4 MXZ, Renegade and Grand Touring with RAS 3 front suspension — **860202187**



- Update your sled RAS 3 to the new RAS X configuration.
- Provides wider ski stance offering sure-footed cornering with improved bump performance.
- Kit includes new spindles and A-Arms and all necessary hardware.
- Compatible with Pilot X Skis.

### FRONT SUSPENSION KIT (36")

REV-XM, XS, XP — **860201153**



- To update your sled to the REV-XM Summit X with T3 package.
- Delivers the agility of the original S-36 handling package, plus the benefits of the RAS 2.
- Better straightline tracking on big bumps.
- Lighter weight.
- Great styling.
- HPG shocks.
- Ski stance adjustable from 35.7" (90 cm) to 37.4" (95 cm).

*While supplies last.



### FRONT SUSPENSION KIT (42" WITH SHOCKS)

REV-XM, XS, XP without 42" front suspension — **860201353**



- To update your sled to the RAS 2 X package configuration.
- 42" (107 cm) RAS 2 front suspension kit.
- Updates sleds to lastest REV-XS trail front end.
- Better straightline tracking on big bumps.
- Lighter weight.
- Great styling.
- HPG Plus R shocks with rebound adjustment.
- Includes spindle compatible with Pilot TS ski.

### NEW RETROFITTABLE SWAY BAR

Neo — **860202206**



- Kit gives the rider the benefit of a sway bar stability trails.

### SWAY BAR QUICK-DISCONNECT LINK KIT

| | |
|---|---|
| Summit Neo, REV Gen4 Summit and Freeride, XM and XP Summit 2013 to 2020 | 860200811 |
| REV-XP Summit 2012 and prior | 860200667* |



- Kit allows you to utilize the benefits of a sway bar on rough trails and quickly disconnect it for sidehilling.
- Sold individually.

### NEW REAR SUSPENSION COIL

Neo — **860202457**



- Higher capacity springs for use with passengers or larger riders.

### NEW SHOCK UPGRADE KIT

Neo Base — **860202210**



- Premium front shock upgrade for base Neo model.
- KYB 36mm high pressure gas shock absorber.
- Spring preload adjustment.
- Reverse mounting (body up) to minimize unsprung weight.

## KYB SHOCKS

### KYB PERFORMANCE SHOCKS KIT

REV Gen4 with RAS X suspension (except SAS) — **860202466**



- Race Edition KYB shock absorbers.
- Piggy Back 46 mm bodies with 16 mm shaft.
- Feature separate adjustments for high- and low-speed compression plus rebound damping.
- Kashima coated for friction-free performance and long life.
- Fits RAS X front suspension.

## FOX SHOCK KITS

### FRONT SHOCKS – LIGHTWEIGHT FLOAT 3 EVOL QS

REV Gen4 (Summit and Freeride) — **860202277**



- Two separate air chambers replace coil springs and offer multiple tuning options. The QS3 adjustments offer three positions for easy and quick compression and rebound adjustments.

- FEATURES:
  - Optimized lightweight shock design.
  - One piece, aluminum mounting hardware.
  - High-flow velocity-sensitive damping.
  - Internal groove position sensitive technology.
  - Fully rebuildable and re-tuneable.
  - Ski stance: 34" and 36".

### REAR TRACK SHOCKS – LIGHTWEIGHT FLOAT 3 QS3 (CENTER) / 1.5 ZERO QSR WITH LOCK-OUT (REAR)

REV Gen4 Summit and Freeride 146", 154", 165" with tMotion — **860202278**



- This FOX kit features the Lightweight Float 3 center and 1.5 Zero with lock-out rear shocks to help your sled get skinny. The center shock features QS3 three position adjustment for quick and easy compression and rebound adjustments. The rear features QS3 compression adjustment plus a lockout feature.

- FEATURES:
  - Optimized lightweight shock design
  - One piece, aluminum mounting hardware
  - High-flow velocity-sensitive damping
  - Internal groove position sensitive technology
  - Fully rebuildable and re-tuneable
  - Fits 146"-165" track lengths

### FRONT SHOCKS – LIGHTWEIGHT 1.5 ZERO QS3-R

REV Gen4 (Summit and Freeride, except Summit Expert) — **860202275**



- The newest version of FOX's renowned lightweight shocks and springs to fit deep snow sleds. They feature QS3 three position adjustment for quick and easy compression and rebound adjustments and fit S-36 front suspensions.

- FEATURES:
  - Optimized lightweight spring and shock design.
  - FOX ice scraper technology (FIST).
  - One piece, aluminum mounting hardware.
  - High-flow velocity-sensitive damping.
  - Internal groove position sensitive technology.
  - Fully rebuildable and re-tuneable.
  - Ski stance: 34" and 36".

### REAR TRACK SHOCKS – LIGHTWEIGHT 1.5 ZERO QS3-R (CENTER) / LIGHTWEIGHT 1.5 ZERO QSR WITH LOCKOUT (REAR)

REV Gen4 Summit and Freeride 146", 154", 165" with tMotion — **860202276**



- The newest version of FOX's renowned lightweight shocks to fit deep snow rear suspensions. The center shock features QS3 three position adjustment for quick and easy compression and rebound adjustments. The rear features QS3 compression adjustment plus a lockout feature.

- FEATURES:
  - Optimized lightweight spring and shock design.
  - FOX ice scraper technology (FIST).
  - One piece, aluminum mounting hardware.
  - High-flow velocity-sensitive damping.
  - Internal groove position sensitive technology.
  - Fully rebuildable and re-tuneable.
  - Fits 146"–165" track lengths.

# VENT KITS & PREFILTERS

### PREFILTER GRILLE KIT

Neo, REV Gen4 (Narrow) — **860201224**



- Reduces water and snow intrusion with a clean, integrated look.
- Easily removable bottom grille.
- Snap-in top grille.
- Airbox pop-off valve filter.



### UPPER PREFILTER AND POP-OFF VALVE FILTER KIT

MXZ Neo, REV Gen4 (Narrow) — **860201756***



### AIRBOX POP-OFF VALVE FILTER KIT

REV Gen4 850 E-TEC, 600R E-TEC, 600 EFI — **860201755***



### HEAVY-DUTY AIR INTAKE FILTERS

Neo, REV Gen4 — **860201399**



- Filters prevent water intrusion and snow buildup.
- Reinforced intake filters, preventing damage in heavy use.
- Replacement for stock filters.
- Not compatible with One-Piece Lightweight Hood

### PREFILTER GRILLE KIT

REV-XM, XS — **860200610**



- Fully integrated overmolded prefilter snap-in grilles.
- Repels and prevents snow from entering bottom pan and hood openings.
- Kit includes easily removable bottom pan grille, lower pan cover plugs, hood grille, and air-box pop-off valve prefilter.

### REPLACEMENT FRONT PREFILTER

REV-XM, XS — **517305029**



### PREFILTER GRILLE KIT

REV-XU Expedition, Skandic — **860201152**

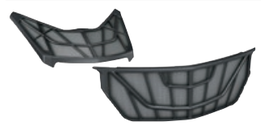

- Keeps snow and moisture out, lets air in.
- Plastic frame molded over mesh for strength.
- Installs easily.
- Totally integrated design.
- Kit includes filters for bottom pan and hood openings.
- Not compatible with Heavy-Duty Front Bumper with 2" Receiver (860200987).

### VENT KIT FOR SIDE PANELS

REV-XM — **860200609**



- Fast air-evacuating overmolded prefilter vents.
- Easy do-it-yourself installation onto premarked production side panels.
- 1¾" holesaw required.
- Use in conjunction with your stock vehicle panels.
- For racing applications only.
- Kit includes vents for both side panels (24x).
- Foam with foil included.

### VENT KIT

All models — **860200684**



- Assortment of replacement or additional vents (7x) with hardware.
- Can be installed on most body panels with relatively flat surface and 2.5 to 3.2 mm thickness.

*While supplies last.*

# COOLING & LUBRICATION

| | | |
|---|---|---|
| **LinQ LIGHTWEIGHT SNOWFLAP EXTENSION** | REV Gen5, REV Gen4 (with short tunnel) | **860202393** |



- Removable snowflap extension that helps engine cooling in hardpack, low and icy snow conditions when installed.
- Stows on the tunnel when not in use.
- Installs on the stock lightweight snowflap of Summit and Freeride models with short tunnel.
- Compatible with stock and hitch bumpers.

| | | |
|---|---|---|
| **LinQ REMOVABLE SNOW FLAP** | REV Gen5 and REV Gen4 Freeride and Summit 154" and longer<br>Summit Neo, REV Gen4 146" Backcountry, Summit, Freeride: specific installation required, see instruction sheet for details | **860201914** |



- Lets you play in the deep powder with no restriction.
- Retains cooling properties when installed.
- Stows on tunnel when not in use.
- Installs with stock snowflap.
- Does not fit with Hitch Rear Bumper.
- Does not fit short tunnel.

| | | |
|---|---|---|
| **SNOWFLAP** | REV-XP, XR except GTX, Grand Touring, XU Expedition 2009 to 2019 | **860200106** • Black / Yellow<br>**860200467** • Black / Grey |



- Customize your sled.
- Hardware included.

| | | |
|---|---|---|
| **TUNNEL ICE SCRATCHERS WITH REPLACEABLE TIPS** | REV Gen 4 16" (129") and Grand Touring LTD | **860202267*** |
| | REV Gen5 (Trail), REV Gen4 16" (137" and up) and Summit XM | **860202387** |
| | REV Gen4 20" and 24" | **860202388** |



- Thoughtful design features replaceable carbide tips.
- Provides additional cooling in hard or icy snow conditions.
- Coil design allows reverse operation without damage.
- Easily stored below running board when not in use.
- Not compatible with models equipped with SAS (Smart-Shock Semi-Active Suspension).

*Not compatible with 129" and 137" Sport models with SC-5M suspension.
*Bracket (860201503) required for MXZ 129" with quick-adjusters.

| | | |
|---|---|---|
| **NEW ICE SCRATCHER** | REV Gen5 (Trail), MXZ Neo, REV Gen4 (except Summit and Freeride) | **860202330** |



- Provides additional cooling in hard and icy conditions.
- Double coil allows use in reverse without damage.
- Small and discreet, can be stored along the rail when not in use.

| | | |
|---|---|---|
| **ICE SCRATCHERS TIPS** | Fits with all Ice Scratchers | **860201446** • Delta shape |



- Ice scratcher replaceable carbide tips.

| | | |
|---|---|---|
| **RAIL ICE SCRATCHERS** | REV Gen5 (Deep Snow), Summit Neo, REV Gen4, XM, XP Summit and Freeride | **860201728** |



- Provide additional lubrication in hard and icy conditions.
- Rail mounted, small, light.
- Design expands on coil concept to allow reversing without damage.
- Easily stored when not in use.

*While supplies last.



| | | |
|---|---|---|
| **AIR RADIATOR KIT** | REV-XS 1200 4-TEC (2016 and up) | **860201401** |
| | REV Gen4 (Wide) with 600 ACE, 900 ACE, 900 ACE Turbo and 900 ACE Turbo R | **860202038** |
| | REV Gen4 (Wide) Expedition, Skandic and Tundra with 600 EFI | **860202144** |



- Provides additional cooling in extreme conditions.
- Not compatible with Auxiliary LED Light (860201235).

# ELECTRICAL & ELECTRONICS

## ELECTRICAL

| | | |
|---|---|---|
| **ENGINE HEATER KIT** | 600 ACE, 900 ACE (2018 and prior) | **860201315** |



- Improves starting in extreme cold temperatures.

| | | |
|---|---|---|
| **BLOCK HEATER KIT** | REV Gen4 (Wide) with 900 ACE Turbo and 900 ACE (2019 and up) | **860201671** |



- Allow easy starts in the coldest of conditions.
- Easy installation.

| | | |
|---|---|---|
| **PRIMER KIT** | REV-XU Tundra | **860200416** |



- Provides hassle-free starting in extreme cold temperatures.

| | | |
|---|---|---|
| **ELECTRIC STARTER KIT** | REV Gen5 (Deep Snow), Neo, REV Gen4 (Narrow) | **860201282** |
| | REV-XP, XM, XS 600 E-TEC (2009 and up), 800R, 800R E-TEC | **860200627** |
| | REV-XP with 500 SS, 600 Sport (2009 and up), XP Fan, XU Tundra | **860201085** |



- Start your sled with the simple push of a button.
- Kit components may vary per model.

| | | |
|---|---|---|
| **REWIND STARTER KIT** | REV Gen5, REV Gen4 (with 7.8 in wide LCD color display) | **NEW 860202533** |
| | 600 HO E-TEC, 800R E-TEC engines (except REV-XU Expedition, WT, SWT) | **860201053** |
| | REV Gen4 16" 600R E-TEC, 850 E-TEC and 600 EFI | **860201410** |
| | REV Gen4 20" (Wide) 850 E-TEC, 600R E-TEC, 600 EFI | **860202123** |



- Complete rewind kit for those wanting extra security.
- Rewind handle located behind panel. Instant handle access requires different side panel.

## ELECTRICAL

### USB POWER OUTLET KIT

Neo, REV Gen4 — **860201261***



- Provides clean, stable power to recharge your electronics while riding.
- Dual USB ports.
- Plug-and-play installation.
- Includes wiring harness.
- Not compatible with 7.8 in. wide LCD color display.

### 12-VOLT POWER OUTLET KITS
*(Not illustrated)*

| | |
|---|---|
| Neo, REV Gen4 | **860201423** |
| REV-XP, XR, XU Tundra (except standard 2011–2012) | **860200196** |
| REV-XM, XS | **860200632** |

- Power up all your electronics with these easy-to-mount 12V plugs.
- Install inside storage compartment.
- Wiring harness included.

### NEW USB INTELLIGENT POWER OUTLET KIT

REV Gen5, Neo, REV Gen4 — **860202433**



- Power all your electronics with this easy to mount USB plug.
- Provides 1 USB-A (QC3.0) and 1 USB-C (PD) plugs.
- Power rate : 36 watts.
- Intelligent USB charger for a quick charge when battery is low.
- Installs inside storage compartment.
- Includes wiring harness for installation on REV Gen5 models.
- Requires Harness extension for Cellphone Holder and USB plug 515178153 for installation on REV Gen4 models.
- Glovebox for one-piece lightweight hood (860202193 or 860202572) is necessary If installed on REV Gen4 lightweight hood models.
- Not compatible with 7.8 in. wide LCD color display for REV Gen 4.

*QC : quick charge*
*PD : power delivery*

### 12-VOLT POWER OUTLET REPLACEMENT KIT

**861507200**



- Wiring harness is not included.

### 12-VOLT PLUG FOR LinQ MULTI-MOUNT PLATE

| | |
|---|---|
| REV Gen4 (Wide) 20" and 24" | **860201888** |
| Neo, REV Gen4 16" | **860202069** |



- Standard 12V outlet for the rear of the vehicle.
- Multi LinQ Plate Retrofit Kit (860202133) required for installation on Skandic Sport.

### REAR 12-VOLT POWER OUTLET
*(Not illustrated)*

REV-XU Skandic and Expedition without E-TEC engine — **860200979***

- Mounts inside rear seat storage compartment.
- Wiring harness included.

### HEATED VISOR KIT
*(Not illustrated)*

| | |
|---|---|
| Neo, REV Gen4 | **860201283** |
| REV-XM, XS, XP, XR, XU Tundra | **860201234** |

- Easy install plug-in for visor kit or heated bags.
- Wiring harness included.

### HEATED PASSENGER VISOR KIT

**860200882**



- Enjoy fog-free riding with this visor kit option for your 1 + 1 Seat.
- To be used in conjunction with Heated 1 + 1 Grips with Guards (860200584).

**While supplies last.*



### 1+1 SEAT ELECTRICAL VISOR/ HEATED BOOTS WIRE HARNESS

REV Gen5, Neo, REV Gen4 — **860201981**



- Works in conjonction with the LinQ 1+1 Seat Heated Grips (860201840).
- Provides 2 extra connections: one connection for electric visor and one connection for heated boots.

### RCA ADAPTOR PLUG KIT

**515176794**



- Y plug power splitter lets you connect 2 heating components or 1 heater and 1 electrical visor.

### ELECTRIC ACCESSORIES WIRING HARNESS
*(Not illustrated)*

REV-XS, XM, XP, XR, XU Tundra (except Tundra Standard 2011–2012) — **860200817**

- Electrical kit required when combining multiple accessories.

## ELECTRONICS

### E LinQ

| | |
|---|---|
| REV Gen5 | NEW **860202354** |
| Neo, REV Gen4 (except Summit, Freeride and 600 EFI) | **860201719** |



**860202354**



**860201719**

- Combines both DESS cord and heated visor/accessory cord into one.
- Converts standard DESS cord into a powered cord.
- Easy and quick magnetic connection that self locates.
- Reduces chances of a broken connector.
- Increases freedom of movement with less cords.
- Works with any electric helmet and 12V heated visor.
- Maintains power connection 100% of the time.
- Supply power up to 3A.

### E LinQ RF DESS KEY

| | |
|---|---|
| REV Gen5 | **515179017** *(Not illustrated)* |
| Neo, REV Gen4 | **515178582** |



- Sold as replacement part for the E LinQ vehicle connector.

### DESS CORD HOLDER

REV Gen5, Neo, REV Gen4 — **278003870**



- Hook currently sold with the E LinQ vehicle connector (860201719).
- Sold both as a replacement part for the E LinQ and as an add-on for any DESS cord from the last 10 years.
- Allows rider to attach DESS cap to the jacket and provides out-of-the-way convenience when not in use.

### PROGRAMMABLE RF D.E.S.S.™ KEY

2015 and up vehicles with 600, 900 ACE, 900 ACE Turbo or 1200 engine — **860201162** • Green, **515178286** • Black



- Digitally Encoded Security System (D.E.S.S.) key's ball-and-socket design provides the rider with quick and easy start every time.
- Anti-theft technology: the key communicates with the vehicle wirelessly so the vehicle starts only when the key code matches the vehicle, for ultimate peace of mind.
- Color options facilitate differentiation between the programmed keys.
- Programmable RF D.E.S.S.™ Key can also be programmed to limit the speed of the snowmobile and engine torque, enabling first-time users and less experienced operators to learn how to operate while gaining the necessary confidence and control.

*Speed limitation is available on:*
*2015 and up 600, 900 ACE, 900 ACE Turbo models and on 2017 and up 1200 engine models.*

## ELECTRONICS

### PROGRAMMABLE D.E.S.S.™ KEY

**515178284**



- Anti-theft technology, Digitally Encoded Security System (D.E.S.S) key easily snaps onto the vehicle and provides the rider with quick and easy start every time.
- The key communicates with the vehicle wirelessly so the vehicle starts only when the key code matches the vehicle, for ultimate peace of mind.
- The Programmable D.E.S.S. Key can also be programmed to limit the speed of the snowmobile and engine torque, enabling first-time users and less experienced operators to learn how to operate while gaining the necessary confidence and control.

*Speed limitation is available on: 2014 900 Ace engines.*

### GARMIN ZUMO† 590 GPS

REV Gen5, Neo, REV Gen4 — **860201263** • US only*



- 5" (12.7 cm) sunlight readable, glove-friendly screen.
- Bluetooth† technology can pair with cell phones.
- Canadian topo maps included, trail maps can be downloaded.
- Cradle and harness included.
- Glovebox Extension/GPS Support (860201249) required for mounting.

### GARMIN ZUMO† 590 GPS MOUNT SUPPORT KIT

REV Gen5, Neo, REV Gen4 — **860201262***



- Mount for Garmin Zumo 590 GPS allows use on more than one vehicle.
- Plug-and-play wire harness.
- Included in Garmin Zumo 590 GPS (860201263 for US and 860201412 for CA).

### MONTANA GPS SUPPORT KIT

*(Not illustrated)*

REV-XS, XM — **860201029***

- Mounting kit and hardware for Garmin Montana GPS.
- To be able to use GPS on more than one vehicle.

### UNIVERSAL GPS SUPPORT KIT

REV-XR, XU — **860201018***



- Kit includes mount, wiring harness and all hardware.
- GPS sold separately.
- Requires Montana GPS and Support Kit (860201417).

### RH-5R RUGGED RADIO

**860201966** • US only



- Dual band (VHF/UHF) frequency operation.
- 5 watts of power.
- High capacity lithium-ion battery.
- FM radio.
- Emergency alarm function.
- Dual watch/dual reception.
- Backlit display illumination.
- Battery "save" function.
- Selectable scan mode.
- Includes waterproof speaker hand microphone.

### AMBIENT AIR AND ENGINE TEMPERATURE MODULE

| | |
|---|---|
| 2015 and up for all platforms | **860201021*** |
| Neo, REV Gen4 | **860201362** |



- Get both outside air and engine temps on your cluster.
- Fits both analog and digital multifunction gauge.
- Plug-and-play in vehicle harness.

*Except fan-cooled engines and 2015 P-TEK.

*While supplies last.



# TRAILERING & COVERS

### SUPERGLIDE II PRO

**860201216**

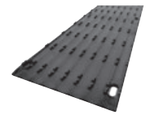

- No more ripping up the plywood on your trailer.
- Allows skis to glide with ease.
- Traction knobs incorporated for better traction.
- Exclusive venting, protects the deck of your trailer from moisture damage.
- Total length of 20' (6 m).
- Each box contains 8 pieces 8.5" x 29.5" (21.5 cm x 74.9 cm).
- Comes with 48 specially coated screws with grommets.

### SUPERGLIDE II WIDE

**860201592**

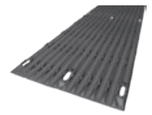

- Allows sled skis to glide with ease.
- Specifically designed traction knobs provide improved traction for your feet.
- Oval mounting channels and custom shoulder screws prevent warping by allowing for expansion and contraction that results from varying temperature.
- Exclusive venting, protects the deck of your trailer from moisture damage.
- Each box contains 8 pieces 13.5" x 29.5" (34.3 cm x 74.9 cm).
- Comes with 72 specially coated screws with grommets.
- Total length of 20' (6 m).

### SUPERGLIDE EDGE RAIL TRIM

**860201217** • Aluminum



- To secure Superglides on ramps or decks leaving an encapsulated finished edge.

### SUPER TRACTION GRID

**860201593**



- Super Traction Grids' strategic grid pattern provides incredible grip and accommodates all snowmobile tracks, even with paddles or studs.
- Each box contains 4 pieces 8.25" x 30" (20.9 cm x 76.2 cm) and hardware.

### SUPERCLAMP II

**860200950**



- Innovative trailer tie-down system.
- Silicone rubber pads to protect your skis.
- Front and middle handles allow easy maneuverability.
- Padlock compatible, becomes a theft deterrent.
- Tension adjustment knob—fits all snowmobiles.
- Comes with screw-style deck hook.

### REAR SUPERCLAMP WITH SUPERTRAC

**860201425**



- Snowmobile tie-down system for rail.
- Silicone rubber pads to protect snowmobile suspension skid.
- Tension adjustment knob—fits all snowmobiles.
- 12" (30 cm) Supertrac kit included.
- Padlock compatible, becomes a theft deterrent.

### RAMP CROSSBAR PROTECTORS

| | |
|---|---|
| 2 pieces with 6 screws | **860201672** |
| 10 pieces with 30 screws | **860201673** |
| 24 pieces with 72 screws | **860201674** |

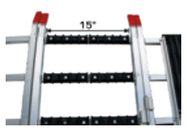


- Enhance and protect your ramp investment.
- Designed to mount over 1" ramp crossbars on solid, double and tri-fold loading ramps.
- 2 pieces together helps prevent stud damage to loading ramps from snowmobile-studded tracks while adding traction

## TRAILERING & COVERS

### SUPERTRAC KIT

**860201413** • 12"
**860201414** • 24"
**860201415** • 48"



- Includes: 1 piece Supertrac, 1 Supertrac deck hook, 2 end caps and all mounting hardware.

### T-STYLE DECK HOOK

**860200995**



- For trailers with a channel in the floor.

### SUPERTRAC DECK HOOK

REV Gen5, Neo, REV Gen4 (Narrow)

**860201416**



- For Supertrac.
- Adjustable and removable hook.

### SCREW STYLE DECK HOOK

**860200994**



- Most common.
- Comes standard with front Superclamps.
- Screws into the existing hole where you would screw the old style bar and crank into or make your own holes.

### LIGHTWEIGHT PACKABLE COVER

Neo, REV Gen4

**860202172**



- Compact, lightweight and packable.
- Covers front lights, handlebar, cluster, glovebox and seat area.
- Fits all REV Gen4 from 16" to 24".

### TUNNEL COVER

REV Gen5, Neo, REV Gen4 (Narrow) and (Wide) 16" up to 146" length sleds

**860201844**




- Protects tunnel accessories (single stacked).
- Compatible with all covers (except Grand Touring Limited).
- Easy to install.
- Not compatible with LinQ Saddlebags (860200624).



# WHICH COVER BEST FITS YOUR SLED?

| PLATFORMS AND STOCK MODELS | | EQUIVALENT CONFIGURATION AND POSSIBLE OPTIONS | | | | | | | | | | | | | | | | | | | SKU |
|---|---|---|---|---|---|---|---|---|---|---|---|---|---|---|---|---|---|---|---|---|---|
| | | 1-UP SEAT | 1.5 UP SEAT (SHORT 2-UP SEAT TUNDRA) | 2-UP SEAT and 1 + 1 SEAT | BACKREST | 1+1 PASSAGER RACK | PASSENGER HANDGRIPS | PASSENGER WIND DEFLECTORS | NO WINDSHIELD | ULTRA LOW WINDSHIELD ( 20 CM) | LOW WINDSHIELD (36 CM) | MEDIUM WINDSHIELD (43 CM) | HIGH WINDSHIELD (58.5 CM) | EXTRA HIGH WINDSHIELD | ULTRA HIGH WINDSHIELD (70 CM) | MIRRORS ON WINDSHIELD SIDE DEFLECTORS | HANDLEBAR AIR DEFLECTORS | MXZ HI-RISER KIT OR SUMMIT HI-RISER KIT | EXTRA FRONT BUMPER | LUGGAGE BOX | WRAP-AROUND BUMPER | CARGO BOX | |
| **RIDE-ON-COVER SYSTEM WITH RAP-CLIP** | | | | | | | | | | | | | | | | | | | | | |
| ***REV GEN5 (DEEP SNOW)*** | Summit (SP, Expert, EDGE, X) Freeride | • | | | | • | | | • | | • | | | | | | • | • | • | | | | **860202550** |
| ***REV GEN5 (TRAIL)*** | MXZ (blizzard, X-RS), Renegade (Adrenaline, X, X-RS), Renegate (Adrenaline, Sport, X, X-RS) | • | • | | | • | | | • | • | • | | | | | | • | • | • | | | | **860202546** |
| | With medium windshield accessory | • | • | | | • | | | | | | • | | | | • | • | • | • | | | | **860202548** |
| | With 1+1 seat accessory | | | • | • | • | • | | | | | • | • | | • | • | • | • | • | | | | **860202551** |
| ***REV GEN4 16" NEO*** | Summit (Neo) | • | | | | • | | | • | • | • | | | | | | • | • | • | | | | **860201884** |
| | Summit & Freeride with medium or high wind shield accessory | • | | | | • | | | | | | • | • | | | • | • | • | • | | | | **860201885** |
| | MXZ (Sport, Blizzard, X-RS, NEO), Backcountry (Sport, Standard, X, X-RS) | • | • | | | • | | | • | • | • | | | | | | • | • | • | | | | **860202546** |
| ***REV GEN4 16"*** | Renegade (Enduro) | • | • | | | • | | | | | | • | | | | • | • | • | • | | | | **860202548** |
| | MXZ, Renegade, Backcountry, with high or ultra high windshields accessory | • | • | | | • | | | | | | | • | | • | • | | • | • | | | | **860202552** |
| | Expedition (Sport), Grand Touring (Sport) | | | • | • | • | • | | | | | • | • | | • | • | • | • | • | | | | **860202551** |
| | Grand Touring (Limited) | | | • | • | | • | • | | | | • | • | | • | • | • | • | • | • | | | **860201887** |
| | 1up with wrap around bumper | • | | | | • | | | | | | • | • | | • | • | • | • | • | | • | | **860202608** |
| | 2up with wrap around bumper | | | • | • | • | • | | | | | • | • | | • | • | • | • | • | | • | | **860202609** |
| ***REV GEN4 LTS 16"*** | Tundra (LT & Sport) | • | • | • | | • | | | | • | • | • | | | • | • | • | • | | | • | | **860202173** |
| ***REV GEN4 20"*** | Expedition (LE, SE) | | | • | • | | • | • | | | | • | • | | • | • | • | • | • | | • | • | **860201972** |
| | Expedition Xtreme | • | | | | | | | • | • | • | • | | | | • | • | • | • | | • | • | **860201973** |
| ***REV GEN4 LTS 20" & 24"*** | Skandic (Sport) | • | | | | | | | • | • | • | • | | | | • | • | • | • | | • | • | **860201973** |
| ***REV GEN4 24"*** | Expedition (SWT) | | | • | • | | • | • | | | | • | • | | • | • | • | • | • | | • | • | **860202200** |
| **INTENSE RAP-CLIP COVER** | | | | | | | | | | | | | | | | | | | | | | | |
| ***YOUTH*** | Youth 120, Youth 200 | • | | | | | | | • | | • | | | | | • | | | | | | | **860202553** |
| ***REV-XM*** | Summit SP | • | | | | | | | | • | • | | • | | • | • | | • | • | | | | **860201375** |
| | Renegade Backcountry | • | | | | | | | | | | • | • | | | • | | • | • | | | | **860201374** |
| | REV-XM with Medium-High Windshield | • | | | | | | | | | | • | • | | | • | | • | • | | | | **860201376** |
| ***REV-XS*** | MXZ X, Renegade X | • | | | | | | | | • | • | | | | | | • | • | • | | | | **860201373** |
| | MXZ (Sport, TNT, Blizzard), Renegade (Sport, Adrenaline, Enduro) | • | | | | | | | | | | • | • | | | • | | • | • | | | | **860201374** |
| | REV-XS 1-Up with Ultra High Windshield | • | | | | | | | | | | | | • | • | • | | • | • | | | | **280000627** |
| | REV-XS with 1+1 and Backrest | | | • | • | | • | • | | | | • | • | | | • | | • | • | | | | **280000626** |
| | REV-XS with Side Panel Mirrors | • | | | | | | | | • | • | • | | | | | • | • | | | | | **280000609*** |
| | Grand Touring LE | | | • | • | | • | • | | | | | • | • | • | | | | | | | | **860201371** |
| | Grand Touring SE | | | • | • | | • | • | | | | | • | • | • | | | | | • | | | **860201372** |
| | Expedition Sport, Grand Touring Sport | | | • | • | | • | • | | | | | • | • | • | • | | • | • | | | | **280000630** |
| ***REV-XU*** | Tundra (Sport, LT, Xtreme) | • | | • | | | | | | • | • | • | | | | • | | • | • | | | | **280000650** |
| | Tundra with Extra High Windshield | • | | • | | | | | | | | | • | | • | | | | • | | | | **280000673** |
| | Expedition (LE, SE, SWT), Skandic (WT, SWT) | | | • | • | | • | • | | | | | | • | • | • | | | • | | | | **280000649** |
| | Expedition Extreme | • | | | | | | | | • | • | | | | | | | • | • | | | | **860201377** |
| **NO RAP-CLIP, NO RIDE-ON-COVER SYSTEM** | | | | | | | | | | | | | | | | | | | | | | | |
| ***REV-XP*** | Summit Sport | • | | | | | | | • | • | | | | | | • | • | | | | | | **860201387** |
| | MXZ Sport, Renegade Sport | • | | | | | | | | | | • | • | | | • | • | • | | | | | **860201388** |
| | Expedition Sport | | | • | • | | • | • | | | | | • | • | | • | | | | | | | **860201389** |
| | REV-XP with 1+1 and Backrest | | | • | • | | • | • | | | | • | • | | | • | • | • | | | | | **280000590*** |

*While supplies last.

# GARAGE & TRUCK SLED DECKS

## DELUXE TOOL KIT

**860202029**



- Casing fits perfectly in Seat Storage Box with or without battery (860202532).
- Features high-quality tools.
- Includes:
  - Stainless steel open end/ring end wrenches; 8–10mm, 10–13mm, 12–14mm, 15–17mm, 16–19mm.
  - ¼ drive ratchet with 4" extension, hexagonal 8 – 10 – 13 – 16, Torx 25 – 30 – 40, Allen 4 – 6 – 8 and Philips #2.
  - Long nose vise-grip.
  - Spring hook tool.

## SLED SHOP WHEELS

**860201805**



- Non-slip rubber grips allow this steel 4-dolly system to move your sled easily throughout the garage.
- Works with both dual and single runner skis.
- 4-wheel dolly kit (kit includes 3 dollies with 4 wheels each).

## RATCHET TIE-DOWNS

**715008309**



- 400 lb (181 kg) safe working load.
- 1" x 10' (2.5 cm x 3 m) strap with Sea-Doo, Ski-Doo and Can-Am logos.
- Deluxe ratchet with rubber handle.
- Coated hooks.
- Pack of 2.

## HEAVY-DUTY RATCHET TIE-DOWNS

**715008308** • 12" (300 mm) webbing included
**715006227** • 18" (460 mm) webbing included.



- 1,000 lb (454 kg) safe working load.
- 1.5 in. x 6 in. (38 mm x 1.8 m) strap with with Sea-Doo, Ski-Doo and Can-Am logos.
- Deluxe ratchet with rubber handle.
- Vinyl-coated hooks.
- Pack of 2.

## LOCKABLE VEHICLE FUEL CAP

**860200387**



- Lockable to protect your fuel.
- Meets latest EPA requirements.

## SKI-DOO 2" (5 CM) RUBBER HITCH CAP

**520001498**








# PARTS

## // PARTS


**145** TRACTION & CONTROL
**156** PROPULSION
**158** ELECTRICAL


## SKI-DOO LIMITED WARRANTY*

### // 1-YEAR ON GENUINE BRP PARTS

With Ski-Doo parts, you get the peace of mind of a FULL ONE-YEAR WARRANTY. And if they're installed by your authorized BRP dealer, labor is covered too. BRP-rebuilt components are a cost-effective solution.

Ski-Doo-rebuilt parts carry the same one-year warranty for major assemblies like short blocks, cylinders and crankshafts.

**Purchased at an authorized BRP dealership/distributor or on a BRP-authorized online store. Other exclusions may apply, see complete limited warranty or contact your Ski-Doo authorized dealer. Unless otherwise stipulated or required by law. This limited warranty does not apply to factory installed accessories.*



# TRACTION & CONTROL

## SKIS

### RAPID ADJUST SKI STANCE

| | |
|---|---|
| Fits all Pilot 7.4 and Pilot X skis | NEW 860202334 |
| Fits all DS-1, DS-2, DS-3 | 860201619 |



*Wide ski stance*



*Narrow ski stance*

- Quick tool-less design adjusts ski stance in seconds.
- Go from on-trail stability to off-trail agility.
- Allows for 2" of ski stance adjustment.
- Sold in pairs.
- Needs Rubber Stopper Pads (505074748) to install on DS-1 and DS-2 skis (sold individually).

### DEEP SNOW LIGHTWEIGHT SKI SPINDLE KIT

REV Gen4 with 36" ski stance — **860201976**



- Improves front dynamics when sidehilling.
- 400 g lighter than stock spindle.
- Standard on Summit X with Expert package and Freeride 154"–165" 2020 and up.

### PILOT X CONVERSION KIT

REV Gen4 MXZ, Renegade & Grand Touring — **860202310**



- Upgrades earlier models to the latest Pilot X skis.
- Completes kit including 2 Pilot X ski assemblies with pre-installed handles, 2 carbides and all required hardware.

### PILOT TS CONVERSION KIT

REV Gen4 MXZ, Renegade, Grand Touring — **860201484**



- Upgrade to the revolutionary adjustable Pilot TS skis.
- For 2016 and up REV-XS models with RAS 2 or previous vehicles with 42" RAS 2 upgrade kit and 2016 spindle (860201241).
- REV-XS 2016 and up with RAS 2, REV-XP, XR, XS with 42" RAS 2 and 2016 spindle (860201241 or 860201353).

### PILOT 7.4 UPGRADE KIT

**860202119** • Black



- Upgrade earlier models to the latest Pilot 7.4 skis.
- Complete kit including 2 Pilot 7.4 ski assemblies with pre-installed handles, 2 carbides and all required hardware.
- Does not fit with LTS suspension.

### PILOT 5.7 SKI UPGRADE KIT

**860200524** • Black



- Complete kit for upgrading earlier snowmobile models.
- Includes 2 skis, 2 handles with rivet kit, 2 Expedition carbides and all required hardware.

### PILOT DS-2 SKI KIT

**860201487** • Black



- Complete kit includes 2 ski assemblies with pre-installed handles, 2 Expedition carbides and all required hardware.

### PILOT 7.4 SKI LINER

Pilot 7.4 skis — **860202115** • Black



- Provides additional flotation and reduces ski wear.
- 260 mm (10.25") wide.
- Same durable material as 7.4 skis.
- Sold in pairs.

# // SKIS

Skis make all the difference in getting your sled to handle just how you like. We offer eight different styles of skis for you to choose from. Which one is right for you? Here are some tips on choosing the right one:

**PLATFORMS: REV GEN4 / XP / XR / XU / XS / XM / REV**

| | | | | | COLORS | | | | | | | | | | | | | | | | | |
|---|---|---|---|---|---|---|---|---|---|---|---|---|---|---|---|---|---|---|---|---|---|---|
| | | | | | Black | | Yellow | | Sunburst Yellow | | Black/Yellow | | Black/White | | Viper Red | | Lava Red | | Orange Crush | | Race Orange | | Manta Green | |
| | | | | | Left | Right | Left | Right | Left | Right | Left | Right | Left | Right | Left | Right | Left | Right | Left | Right | Left | Right | Left | Right |
| TOURING |  |  | **PILOT 5.7 SL**<br>2 carbides/ski | • Lightweight single or dual runner skis provide effortless steering at low speeds and constant grip without compromise at higher speeds.<br>• Standard use is one carbide runner—add a second to reduce darting.<br>• Great all-around trail performance. | 505072443 | | N/A | | N/A | | N/A | | N/A | | N/A | | N/A | | N/A | | N/A | | N/A | |
| UTILITY |  |  | **PILOT 7.4**<br>1 carbide/ski | • Specifically designed for utility purposes.<br>• Deeper keels allow more control while towing.<br>• Increased tip-up rear end for better reverse capability.<br>• 1 inch wider than Pilot DS-2 for improved flotation in deep snow.<br>• More aggressive cornering while keeping a light steering feeling. | 505074736 | | N/A | | N/A | | N/A | | N/A | | N/A | | N/A | | N/A | | N/A | | N/A | |
| TRAIL SPORT |  |  | **PILOT 5.7**<br>1 or 2 carbides/ski**** | • Lightweight single or dual runner skis provide effortless steering at low speeds and constant grip without compromise at higher speeds.<br>• Standard use is one carbide runner—add a second to reduce darting.<br>• Great all-around trail performance. | 505072854 | 505072855 | 505073028 | 505073029 | 505073575 | 505073576 | 505073030 | 505073031 | 505073032 | 505073033 | 505073026 | 505073027 | N/A | | 505074071 | 505074072 | 505073645 | 505073646 | 505074239 | 505074240 |
| |  |  | **PILOT TS ADJUSTABLE**<br>1 carbide/ski | • The industry's first and only adjustable ski.<br>• The Pilot TS skis allow riders to change ski bite for changing snow conditions or riding styles easily and quickly.<br>• With the Pilot TS skis you dial in the perfect setting by turning a knob on the ski leg.<br>• The ski runner has ½" (12.5 mm) of travel up and down.<br>• The thin runner and square keel design work together to eliminate darting. | 505074829 | 505074830 | N/A | | 505073851 | 505073852 | N/A | | N/A | | N/A | | N/A | | 505074067 | 505074068 | N/A | | 505074235 | 505074236 |
| |  |  | **PILOT X**<br>1 carbide/ski | • Completely redesigned from Pilot 5.7 with a new structural topside for 10% more rigidity.<br>• 31 mm longer keel with a new shape reduces darting.<br>• Adds 10% more lateral surface area and blends more smoothly with a new carbide.<br>• 11° degree reduction in approach angle. | 505074926 | 505074927 | N/A | | 505075024 | 505075025 | N/A | | N/A | | N/A | | N/A | | N/A | | N/A | | N/A | |
| |  | 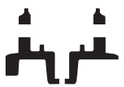 | **PILOT TX**<br>1 carbide/ski | • Improved to better match the REV Gen4 features.<br>• Redesigned top side for increased rigidity.<br>• 20 mm shorter overall length and more dramatic tip-up at the rear.<br>• 63 mm longer runner plate increases lateral surface for more effective cornering.<br>• Smoother front approach angle to reduce darting even further. | 505074776 | 505074777 | N/A | | 505075026 | 505075027 | N/A | | N/A | | N/A | | N/A | | N/A | | N/A | | N/A | |
| TRAIL PERFORMANCE |  |  | **PILOT R**<br>1 carbide/ski | • Straight from the MXZ X 600RS race sled.<br>• Very aggressive profile for sharp handling.<br>• Lightweight with high rigidity.<br>• Proven on the ISOC race circuit. | 505074670 | | N/A | | 505074690 | | N/A | | N/A | | N/A | | N/A | | N/A | | N/A | | N/A | |
| DEEP SNOW |  | 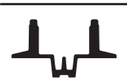 | **PILOT DS****<br>1 carbide/ski | • Designed specifically for deep snow riding.<br>• Works well in many off-trail applications from utility sleds to mountain sleds.<br>• Thin edge is effective for grabbing side hills. | 505073100 | | N/A | | N/A | | N/A | | N/A | | N/A | | N/A | | N/A | | N/A | | N/A | |
| |  |  | **PILOT DS-2**<br>1 carbide/ski | • Evolution of the DS with a deeper and shorter keel.<br>• Increased agility and less effort than the original.<br>• Great all-around ski for deep snow use.<br>• Standard on mountain sleds with 2.5" lug tracks and utility sleds. | 505073227 | | 505073277 | | 505073658 | | N/A | | 505073279 | | N/A | | 505073510 | | 505073511 | | 505073654 | | 505073354 | |
| |  | 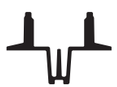 | **PILOT DS-3****<br>1 carbide/ski<br>**PILOT DS-3 REV Gen4*****<br>1 carbide/ski | • Deep snow ski designed to match the latest 3" lug and longer tracks.<br>• 0.47" (12 mm) deeper keel than DS-2.<br>• Works well for aggressive riders using the biggest tracks. | 505073588<br>505074746 | | N/A<br>N/A | | 505073627<br>505074756[i] | | N/A<br>N/A | | N/A<br>N/A | | N/A<br>505074747 | | N/A<br>N/A | | 505074023<br>505074757 | | N/A<br>N/A | | 505073990<br>505074755 | |

***Does not fit REV Gen4. ***Fits only REV Gen4. ****Second carbide can be added to ski by drilling marked additional holes.*
*Note: The use of aggressive skis, ski carbide runners or studs will alter the handling of your snowmobile, particularly in terms of maneuverability, acceleration and braking.*
*Please refer to your Operators Guide for more details.*

## SKIS

### PILOT DS SKI LINER



| | |
|---|---|
| Pilot DS-2 skis | **860201040** • Black |
| Pilot DS skis | **860200636** • Black |

- Provides additional flotation and reduces ski wear.
- Same durable material as DS Ski.
- Sold in pairs.

### SKI SKIN



| | |
|---|---|
| Pilot 6.9 skis | **860200422** • Black |

- Provides additional flotation and reduces ski wear.
- Made of durable polyethylene.
- Sold in pairs.

### DS-3 SKI TIP KIT



| | |
|---|---|
| Fits vehicles with DS-3 skis | **860201214** • Black<br>**860201501** • Sunburst Yellow |

- Easy-install custom color tips change the appearance of your sled in minutes.
- Adds flotation on the front of the DS-3 ski.
- Sold in pairs with mounting hardware.

### SKI HANDLE RIVET KIT



| | |
|---|---|
| | **860200525** |

- Includes 2 long and 2 short aluminum rivets for repairing the handle on Pilot skis.

### SKI HANDLE



| | | |
|---|---|---|
| Pilot 5.7, 6.9, Pilot SL and Pilot TS, Pilot X and TX | **505070917** • Yellow<br>**505070963** • Black<br>**505071038** • Scarlet Red<br>**505071048** • Orange Saturn<br>**505071059** • Viper Red<br>**505071556** • Full Moon | **505072102** • White<br>**505073649** • Race Orange<br>**505073642** • Sunburst Yellow<br>**505074226** • Manta Green<br>**505074223** • Tactical Grey |

- High-density colored polyethylene loops.

### SKI HANDLE



| | | |
|---|---|---|
| Pilot 7.4, DS-1, DS-2, DS-3 | **505072976** • Black<br>**505073107** • Yellow<br>**505073108** • White<br>**505073388** • Lava Red | **505074229** • Manta Green<br>**505073513** • Orange Crush<br>**505073651** • Race Orange<br>**505073665** • Sunburst Yellow |

- High-density colored polyethylene loops.

### SKI HANDLE



| | | |
|---|---|---|
| Pilot R | **505071674** • Yellow | **505073138** • Black |

- ISR compliant race ski loop.
- High-density colored polyethylene loops.

### SKI HANDLE



| | | |
|---|---|---|
| Pilot X, Pilot TX, 5.7, 6.9, SL and TS | **505075029** • Lava Red<br>**505075028** • Sunburst Yellow | **505075275** • Manta Green<br>**505074778** • Black |

- High-density colored polyethylene loops.



## SKI-DOO PILOT* SKIS AND CARBIDES TO SUIT ALL RIDING STYLES

### NEW CARBIDES

| | |
|---|---|
| Youth | **860202555** |

- 7/16" flat top runner with 4" of 60 degree turning carbide.
- Sold in pairs.

### PILOT X CARBIDES RUNNER



| | |
|---|---|
| Pilot X and Pilot 5.7 Skis | **860202180** |

- 4" 90° carbides.

### PILOT TX CARBIDES RUNNER



| | |
|---|---|
| Pilot TX Skis – 4" 90° carbides | **860202192** |
| Pilot TX Skis – 7" 60° carbides | **860202243** |

- 12.5 mm longer runner: Increased front-end grip and steering stability.
- Smoother runner attack angle (10°) for increased predictability.

### PILOT TS CARBIDE RUNNER



| | |
|---|---|
| Pilot TS - (7" 60° tall) | **860201364** |

- Increases front end bite with an extra ¼" (6 mm) of runner depth, plus 7" of 60° carbide.
- For Pilot TS adjustable skis.
- Sold in pairs.
- Patent pending US20150314800A1.

### PILOT TS CARBIDE RUNNER



| | |
|---|---|
| Pilot TS - (7" 60° carbides - Pilot TS) | **860201240** |
| Pilot TS (stock replacement) - (5" 90° carbides) | **860201178** |

- For Pilot TS adjustable skis.
- Sold in pairs.
- Patent pending US20150314800A1.

### PILOT EXPEDITION CARBIDES



| | |
|---|---|
| Pilot X, Pilot 5.7 SL, Pilot 5.7, Pilot 7.4, Pilot DS, Pilot DS-2, Pilot DS-3 Skis | **860201044** • Square - Pack of 2<br>**860201220** • Round 7/16" - Pack of 2 |

- Protected under patent numbers US 7,413,198, US 7,389,995 and CA2535565.

### PILOT EXTREME CARBIDES



| | |
|---|---|
| Pilot X, Pilot 5.7 SL, Pilot 5.7, Pilot 7.4, Pilot DS, Pilot DS-2, Pilot DS-3 Skis | **860201045** • Round ½" - Pack of 4 |
| Pilot X, Pilot 5.7 SL, Pilot 5.7, Pilot DS, Pilot DS-2, Pilot DS-3 Skis | **860201043** • Round ½" - Pack of 2 |

- Protected under patent numbers US 7,413,198, US 7,389,995 and CA2535565.

**Protected under patent numbers US 7,413,198, US 7,389,995 and CA2535565.*
*Note: The use of aggressive skis, ski carbide runners or studs will alter the handling of your snowmobile, particularly in terms of maneuverability, acceleration and braking. Please refer to your Operators Guide for more details.*

## SKI-DOO PILOT* SKIS AND CARBIDES TO SUIT ALL RIDING STYLES

### PILOT R CARBIDES

Pilot R skis — **860201697**



- Round, 7/16" runners with 4 fixation points and 6" of 60° carbides.
- Pack of 2.

## SKI-DOO BY woodys CARBIDES

### CARBIDE RUNNER

| | |
|---|---|
| Pilot skis, except DS and DS-2 | **860202557** • Preformed 4" 60° |
| Pilot X, Pilot 5.7 SL, Pilot 5.7, Pilot DS, Pilot DS-2, Pilot DS-3 skis | **860202558** • Preformed 6" 60° |
| Pilot X, Pilot 5.7 SL, Pilot 5.7, Pilot DS, Pilot DS-2, Pilot DS-3 skis | **860202559** • Preformed 8" 60° |



- The Dooly† by Woodys has two 7/16" Flat-Top† runners mounted on a plate for each ski.
- Four contact lines on snow surface help decrease darting of sled as it makes own groove in a trail.
- When in a turn, only one of the Dooly bars is in contact with the snow or ice.
- A Dooly with 4", 6" or 8" of carbide on both runners provides the same turning power as a single runner with 4", 6" or 8" of turning carbide.
- Sold individually.

### ACE SKI RUNNER

Pilot X, Pilot 5.7 SL, Pilot 5.7, Pilot 7.4, Pilot DS, Pilot DS-2, Pilot DS-3 skis

| | |
|---|---|
| **860201969** • Preformed 6" 60° | |
| **860201970** • Preformed 8" 60° | |



- Woodys ACE single runner line uses a 3/8" x 1/2" preformed steel square bar.
- Taller profile and more aggressive, providing excellent control in all conditions.
- Works great in deep snow.
- Carries innovative features like 60° carbide inserts that are guaranteed not to come out under any conditions, Flat-Top design, rounded wear pads, full-length hardweld and bevel-cut host bar that doesn't snag trailer edge.
- Pack of 2.

### EXECUTIVE† CARBIDES

Pilot X, Pilot 5.7 SL, Pilot 5.7, Pilot 7.4, Pilot DS, Pilot DS-2, Pilot DS-3 skis — **860200580**

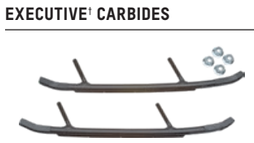

- 1/2" round preformed material swedged at each end to best fit ski contour fitted with 8" of 60° turning carbide.
- Performance trail riders are known to use this runner.
- Provides proper balance with a studded track.
- Pack of 2.

### EXTENDER TRAIL III† CARBIDES

Pilot X, Pilot 5.7 SL, Pilot 5.7, Pilot 7.4, Pilot DS, Pilot DS-2, Pilot DS-3 skis — **860200578**



- 1/2" round preformed material swedged at each end to best fit ski contour.
- 4" of 60° turning carbide provides positive cornering control.
- Pack of 2.

### TRAIL BLAZER IV† CARBIDES

Pilot X, Pilot 5.7 SL, Pilot 5.7, Pilot 7.4, Pilot DS, Pilot DS-2, Pilot DS-3 skis — **860200579**



- 1/2" round preformed material swedged at each end to best fit ski contour.
- With 6" of 60° turning carbide, this runner is designed for trail riders looking for performance in cornering power and control.
- Pack of 2.

## WHEELS & SLIDER SHOES

### SLIDER WITH VESPEL† INSERTS

| | |
|---|---|
| All models with 163" and longer tunnels | **503194816** |
| All models with 154" and shorter tunnels | **503194815** |



- Uses DuPont Vespel inserts for less friction.
- Can be cut to desired length.
- Better fuel efficiency, more power and increased vehicle speed due to reduced friction between the track clips and slides.
- Reduced need for maintenance and associated costs.
- Extended life due to enhanced wear characteristics of Vespel polyamide over incumbent UHMW PE.
- Allows riders to operate sleds in less than acceptable snow and trail conditions since water from snow is not needed for lubricity as with incumbent UHMW PE slide rails.

**Protected under patent numbers US 7,413,198, US 7,389,995 and CA2535565. ‡While supplies last.*
*Note: The use of aggressive skis, ski carbide runners or studs will alter the handling of your snowmobile, particularly in terms of maneuverability, acceleration and braking.*
*Please refer to your Operators Guide for more details.*



### SLIDER SHOES



- Custom color-matched slider shoes with built-in wear marker.
- Long-lasting, impact-resistant.
- For all slide rail lengths.
- Easy-cut to desired length.

| MODELS | |
|---|---|
| 146" SC-5 – Mountain & tMotion | **503191499** • Black<br>**503191695** • Yellow<br>**503191947** • White |
| 154" SC-5 – Mountain & tMotion | **503191198** • Black<br>**503191696** • Yellow<br>**503191948** • White |
| 163" SC-5 – Mountain & tMotion | **503191501** • Black<br>**503191697** • Yellow<br>**503191949** • White |
| REV Gen4 154" | **503194251** • Black |
| REV Gen4 165" | **503194520** • Orange<br>**503194254** • Black |
| REV Gen4 175" | **503194413** • Black<br>**503194906** • Manta Green<br>**503194908** • Sunburst Yellow |
| 120" SC-5 & rMotion | **503191301** • Black<br>**503191693** • Yellow<br>**503191945** • White |
| rMotion and rMotion X 120" | **503192562** • Red |
| rMotion and rMotion X 137" | **503191306** • Black<br>**503191694** • Yellow<br>**503191946** • White<br>**503192563** • Red |
| 137" rMotion Grand Touring 900 ACE | **503193449** • Black |
| 174" tMotion | **503193819** • Black |
| REV-XS 174" | **503194506** • Sunburst Yellow<br>**503194505** • White |

### LIGHTWEIGHT WHEEL



- Color-matched lightweight snowmobile wheels.

| MODELS | |
|---|---|
| 141 mm – REV Gen4, XM, XS, XP, XR | **503192794** • Black<br>**503191621** • Yellow<br>**503191622** • Full Moon<br>**503191942** • White |
| 152 mm – REV Gen4, XM, XS, XP, XR | **503191755** • Black |
| 180 mm – REV Gen4, XM, XS, XP, XR | **503191626** • Yellow<br>**503191627** • Full Moon<br>**503191742** • Black<br>**503191943** • White |
| 141 mm – rMotion | **503193477** • Black |
| 147 mm – rMotion | **503193376** • Black |
| 180 mm – rMotion | **503192766** • Black |

### EXTRA IDLER WHEEL KIT

| | |
|---|---|
| REV-XP, XR (except rMotion) | **860201230** • 141 mm |
| REV Gen4 Summit, Freeride and Backcountry, XM, XM Summit X with T3 package | **860201183** • 152 mm |



- Reduces drag and rolling resistance.
- Includes 2 wheels, brackets and hardware.

### 4TH REAR WHEEL KIT* - 180 MM

*(Not illustrated)*

REV-XS, XP, XR 120" and 137" — **860200358** • 180 mm

- 4th rear idler design reduces drag and rolling resistance.
- Works in conjunction with stock 3 wheel setup.

### NEW REAR WHEEL KIT

| | |
|---|---|
| Youth 200 | **7639-963** |
| Youth 120 | **7639-967** |



- Additional wheels for the rear suspension for low snow conditions.
- Includes wheels and mounts.

### NSK†

| | |
|---|---|
| **503190396 • 6004** | **503191778 • 6006** |
| **503193548 • 6005** | **293350115 • 6205** |




- High performance grease developed for extreme temperatures, water resistance and high speeds with low start torque.
- Advanced Winter Grade DUL1 double-contact seal design for optimum protection from moisture and contamination.
- Polyamide resin ball-guide cage facilitates smooth rolling contact and lubricant distribution.
- Ultra-clean steel for extended bearing life—high-grade balls for quiet and smooth operation even at high speed.
- Super finished raceways to minimize noise and improve lubricant distribution and life.

## TRACTION

# // TRACKS, YOUR CONNECTION TO THE SNOW

**POWDER MAX LIGHT**
- 3.5" (8.89 cm) pitch reduces weight and keeps snow between lugs for added performance.
- Exclusive 16" (41 cm) wide design adds flotation and traction without sacrificing maneuverability.
- Edges flex to reduce the effort to initiate roll-up.
- Available in either 2.5" or 3.0" (6.3 or 7.62 cm) lug heights.

**POWDER MAX 3 / FLEXEDGE**
- The track edges bend, making roll-up easy and predictable.
- Exclusive FlexEdge technology available in Powder Max, Powder Max 2 & 3 and Cobra 1.6 profiles.
- From 137" to 174".

| PITCH | LENGTH | WIDTH | LUG HEIGHT | PROFILE | CLIP | SKU |
|---|---|---|---|---|---|---|
| 3.5" | 154" | 16" | 2.50" | Powder Max Light | 1 clip every 2 profiles | 504153791 |
| | 154" | 16" | 3.00" | Powder Max Light | 1 clip every 2 profiles | 504153785 |
| | 165" | 16" | 2.50" | Powder Max Light | 1 clip every 2 profiles | 504153792 |
| | 165" | 16" | 3.00" | Powder Max Light | 1 clip every 2 profiles | 504153786 |
| | 175" | 16" | 3.00" | Powder Max Light | 1 clip every 2 profiles | 504153787 |
| 3.00" | 154" | 16" | 3.00" | Powder Max 3 / FlexEdge | 1 clip every 2 profiles | 504153349 |
| | 163" | 16" | 3.00" | Powder Max 3 / FlexEdge | 1 clip every 2 profiles | 504153224 |
| | 174" | 16" | 3.00" | Powder Max 3 / FlexEdge | 1 clip every 2 profiles | 504153234 |
| 2.86" | 120" | 15" | 1.25" | ICE Ripper XT | Full clip | 504153100 |
| | 120" | 15" | 1.00" | RipSaw | Full clip | 504152760 |
| | 120" | 15" | 1.25" | RipSaw | Full clip | 504152606 |
| | 129" | 15" | 1.25" | ICE Ripper XT | Full clip | 504153345 |
| | 129" | 15" | 1.25" | RipSaw | Full clip | 504153344 |
| | 129" | 15" | 1.25" | RipSaw 2 PLY | Full clip | 504153346 |
| | 129" | 15" | 1.50" | RipSaw 2 PLY | Full clip | 504153347 |
| | 129" | 15" | 1.50" | ICE Ripper XT | Full clip | 504154056 |
| | 129" | 15" | 1.60" | Cobra | Full clip | 504153420 |
| | 137" | 15" | 1,.25" | RipSaw (Silent Drive 2 System) | Full clip | 504153789 |
| | 137" | 15" | 1.25" | Ice Ripper XT (Silent Drive 2 System) | Full clip | 504154005 |
| | 137" | 15" | 1.25" | Cobra | 1 clip every 2 profiles | 504152838 |
| | 137" | 15" | 1.25" | ICE Ripper XT | Full clip | 504153101 |
| | 137" | 15" | 1.25" | RipSaw | Full clip | 504152905 |
| | 137" | 15" | 1.25" | RipSaw 2 PLY | Full clip | 504154284 |
| | 137" | 15" | 1.50" | RipSaw | Full clip | 504153237 |
| | 137" | 15" | 1.50" | ICE Ripper XT | Full clip | 504154057 |
| | 137" | 15" | 1.60" | ICE Cobra 1.6 (REV Gen4 compatible) | Full clip | 504153706 |
| | 129" | 15" | 1.60" | ICE Cobra 1.6 (REV Gen4 compatible) | Full clip | 504153705 |
| | 146" | 15" | 1.60" | ICE Cobra 1.6 (REV Gen4 compatible) | Full clip | 504153717 |
| | 146" | 15" | 1.60" | Cobra | Full clip | 504153669 |

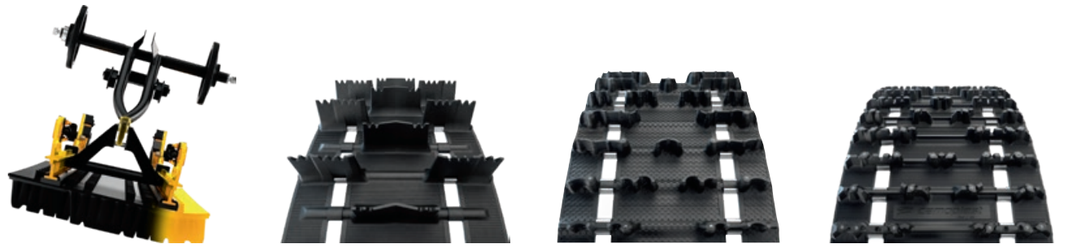

POWDER MAX 3 / FLEXEDGE | POWDER MAX 3 | ICE COBRA 1.6 | ICE RIPPER XT

| PITCH | LENGTH | WIDTH | LUG HEIGHT | PROFILE | CLIP | SKU |
|---|---|---|---|---|---|---|
| 2.86" | 137" | 16" | 1.25" | Cobra | 1 clip every 2 profiles | 504152907 |
| | 137" | 16" | 1.75" | Powder Max | 1 clip every 2 profiles | 504152803 |
| | 137" | 16" | 1.75" | Powder Max / FlexEdge | Full clip | 504153294 |
| | 137" | 16" | 2.25" | Powder Max | Full clip | 504153103 |
| | 137" | 16" | 2.25" | Powder Max / FlexEdge | Full clip | 504153293 |
| | 137" | 16" | 1.25" | RipSaw | 1 clip every 2 profiles | 504152734 |
| | 146" | 16" | 2.00" | Powder Max / FlexEdge | 1 clip every 2 profiles | 504153348 |
| | 146" | 16" | 2.00" | Powder Max | 1 clip every 2 profiles | 504153670 |
| | 146" | 16" | 2.25" | Powder Max / FlexEdge | 1 clip every 2 profiles | 504153222 |
| | 146" | 16" | 2.50" | Powder Max 2 / FlexEdge | 1 clip every 2 profiles | 504153198 |
| | 154" | 16" | 1.50" | Charger | 1 clip every 2 profiles | 504152761 |
| | 154" | 16" | 2.00" | Powder Max | Full clip | 504153173 |
| | 154" | 16" | 2.25" | Powder Max | 1 clip every 2 profiles | 504153015 |
| | 154" | 16" | 2.25" | Powder Max / FlexEdge | 1 clip every 2 profiles | 504153223 |
| | 154" | 16" | 2.50" | Powder Max 2 | 1 clip every 2 profiles | 504153009 |
| | 154" | 16" | 2.50" | Powder Max 2 / FlexEdge | 1 clip every 2 profiles | 504153199 |
| | 154" | 16" | 2.50" | ProLite | 1 clip every 2 profiles | 504153396 |
| | 154" | 20" | 1.25" | Utility | 1 clip every 3 profiles | 504152817 |
| | 154" | 20" | 1.50" | Extreme Utility | 1 clip every 3 profiles | 605613004 |
| | 154" | 20" | 1.50" | Silent Cobra WT | Full clip | 504153973 |
| | 154" | 20" | 1.50" | Silent ICE Cobra WT | Full clip | 504153974 |
| | 154" | 20" | 1.80" | Cobra WT | Full clip | 504154041 |
| | 154" | 20" | 1.25" | ICE Ripper | Full clip | 504153036 |
| | 154" | 20" | 1.50" | ICE Ripper | Full clip | 504153037 |
| | 154" | 20" | 1.75" | Powder Max | 1 clip every 3 profiles | 504153133 |
| | 163" | 16" | 2.25" | Powder Max | 1 clip every 2 profiles | 504153016 |
| | 163" | 16" | 2.50" | Powder Max 2 / FlexEdge | 1 clip every 2 profiles | 504153200 |
| 2.52" | 156" | 24" | 1.25" | ICE Ripper for SWT | Full clip | 504153927 |

## TRACTION



COBRA WT | ICE ATTAK XT | RIPSAW II 1.5 | BACKCOUNTRY X | CONQUER 280

| PITCH | LENGTH | WIDTH | LUG HEIGHT | PROFILE | CLIP | SKU |
|---|---|---|---|---|---|---|
| 3.5" | 165" | 15" | 2.8" | Conquer 280 | 1 clip every 2 profiles | C9340M |
| | 154" | 15" | 2.8" | Conquer 280 | 1 clip every 2 profiles | C9341M |
| 3.00" | 174" | 15" | 3.2" | Challenger X3.2 | 1 clip every 2 profiles | C9311M |
| 2.86" | 146" | 16" | 2.25" | Powder Max | 1 clip every 2 profiles | C9064M |
| | 137" | 16" | 1.6" | ICE Cobra 1.6* | Full clip | C9249C |
| | 137" | 15" | 1.75" | Backcountry X | Full clip | C9289C |
| | 137" | 15" | 1.5" | RipSaw II 1.5 | Full clip | C9306C |
| | 120" | 15" | 1.75" | Hurricane 175 | Full clip | C9400C |
| | 129" | 15" | 1.75" | Hurricane 175 | Full clip | C9401C |
| | 137" | 15" | 1.75" | Hurricane 175 | Full clip | C9402C |
| | 146" | 15" | 1.75" | Hurricane 175 | Full clip | C9403C |
| 2.52" | 121" | 15" | 1.22" | ICE Attak XT | Full clip | C9200H |
| | 156" | 24" | 1.75" | Cobra SWT | Full clip | C9260U |

## TRACTION ACCESSORIES

**HEAVY-DUTY SPRING KIT**
*(Not illustrated)*

Youth — **8639-208**

- Higher capacity springs for larger riders.
- Maintain handling and comfort as riders grow.

**Not compatible with REV Gen4.*

### PHANTOM SHARP STUDS & SUPPORT PLATES BY WOODY'S 5/16 – 1.325"



- All the benefits of 286 Phantom Series studs.
- Unique track design makes it the only traction product available to maintain track warranty and track life.
- Kit complete with stud, nut and support plate.
- The only traction product approved by BRP.

| MODELS | |
|---|---|
| REV Gen4, XS, XP, XR – 120" tracks | **860200729** • Pack of 84 |
| REV Gen4, XS, XP, XR – 129" & 137" tracks | **860200730** • Pack of 96 |
| REV Gen4, XS, XP, XR – (5/16 - 1.325") | **860200731** • Pack of 500 |

### 286 PHANTOM SERIES STUDS & SUPPORT PLATES BY WOODY'S



- A complete line of traction products developed specifically for Ski-Doo's REV Gen4, XS, XP, XR tracks.
- Due to the unique track design, this is the only traction product available to maintain track warranty and track life.
- Kit complete with stud, nut and support plate.
- The only traction product approved by BRP.

| MODELS | |
|---|---|
| REV Gen4, XS, XP, XR – 120" tracks • 5/16 - 1.075" | **860200718** • Pack of 84 |
| REV Gen4, XS, XP, XR – 129" & 137" tracks • 5/16 - 1.075" | **860200719** • Pack of 96 |
| REV Gen4, XS, XP, XR • 5/16 - 1.075" | **860200720** • Pack of 500 |
| REV Gen4, XS, XP, XR – 120" tracks • 5/16 - 1.325" | **860200721** • Pack of 84 |
| REV Gen4, XS, XP, XR – 129" tracks • 5/16 - 1.325" | **860201281** • Pack of 90 |
| REV Gen4, XS, XP, XR – 137" tracks • 5/16 - 1.325" | **860200722** • Pack of 96 |
| REV Gen4, XS, XP, XR • 5/16 - 1.325" | **860200723** • Pack of 500 |

### GOLD DIGGER[1] STUDS AND SUPPORT PLATES BY WOODY'S

| MODELS | |
|---|---|
| REV Gen4 Mach Z (2021) & all 1 1/4" 137" 2 ply tracks • 5/16 - 1.325" | **415128957** • Pack of 96 |



- Through-hardened carbon steel with 60° carbide insert.
- 1" head with patented track trapping design.
- Due to the unique track design, this is the only traction product available to maintain track warranty and track life.
- Kit complete with stud, nut and support plate.
- The only traction product approved by BRP.

### TUNNEL PROTECTOR KIT



- Protects your bulkhead and heat exchangers in all conditions.
- Provides proper protection for stud installation on pre-studded track.
- So unique—patent pending US20160152304.

| MODELS | |
|---|---|
| Neo 120" | **860202212** |
| REV-XP fan-cooled 120" & 137", REV-XU Tundra 137" | **860200381** |
| REV-XU Expedition (2011 & up) and Skandic SWT, WT | **860200757** |
| REV-XP (except fan-cooled), REV-XR, REV-XS 120", 129" & 137" | **860200802** |
| REV Gen4 16", 129" and 137" tracks with Ice Ripper track or Woody's studs, REV Gen4 (Wide) 20" with Ice Ripper and Silent Ice Cobra WT. | **860201280** |
| REV Gen4 with 129'' Ice Cobra, Ice Attak XT track or Ice Ripper XT (Silent Drive 2 System) | **860201688** |
| REV Gen4 with 137'' Ice Cobra, Ice Attak XT track or Ice Ripper XT (Silent Drive 2 System) | **860201692** |
| REV Gen4 with 146'' Ice Cobra, Ice Attak XT track or Ice Ripper XT (Silent Drive 2 System) | **860201693** |

### DRILL BIT

**415128884**



⚠ WARNING
Install APPROVED studs in marked locations ONLY

*To install the studs, always use the installation tools, procedures and torque specified in the instructions. Proper installation provides maximum product longevity and helps prevent track damage. BRP recommends that studs be installed by authorized BRP dealers and on approved pre-patterned tracks only. These tracks come standard on most 2022 Ski-Doo snowmobiles. Look for this symbol on your track. Woody's products are designed to fit and interact with each other. The stud nut and support plate form a complete unit. The use of aggressive skis, ski carbide runners or studs will alter the handling of your snowmobile, particularly in terms of maneuverability, acceleration and braking. Please refer to your Operators Guide for more details.*

# PROPULSION



### PERFORMANCE DRIVE BELTS

- High performance drive belts calibrated to maximize your sled's performance.
- Aramid tensile cords used in construction for extra long life and dependability, also delivers a consistent length with minimal belt shrinkage and minimal length adjustments.
- High tensile reinforced fiber elastomer undercords provide minimal dusting and long term flex life.
- Flexweave overcord for superior adhesion and crack resistance.
- Consistent performance during life of belt.
- Quality you can count on for optimum performance.
- Built with distinctive durability features for mountain, trail or fast tracks.

| SKU | DESCRIPTION |
|---|---|
| ***REV GEN5, REV GEN4, XM, XS, XP, XU, XR, REV*** | |
| 417300571 | 850 E-TEC, 900 ACE Turbo R, 900 ACE Turbo – 150 |
| 417300531 | 800R E-TEC (all model years), 800R P-TEK (all model years) |
| 417300558 | 900 ACE Turbo GT 2019, 900 ACE Turbo – 130 |
| 417300551 | 600R E-TEC, 600 E-TEC, 1200 4-TEC, 900 ACE |
| 417300586 | 600 EFI |
| 417300367 | 550 Fan (2010-2011) |
| 415060600 | Fan (2009 and prior) |
| 414860700 | 550 Fan (2012, 2014) |
| 417300585 | 600 ACE, 550 Fan |
| ***RT*** | |
| 417300189 | 1000 |
| ***ZX*** | |
| 414860700 | 500, 600 LC |
| 417300585 | 700, 800 LC |
| 417300067 | 700 (1999, 2000) |
| 415060600 | Fan |
| 417300586 | V-1000, 600 SDI (2004), V-800 |
| 417300383 | 800 SDI (2004) |
| ***UTILITY (EXCEPT REV GEN4 (WIDE) 20" & REV-XU)*** | |
| 605348425 | All 2008 models, 2007 TUV and SWT V-800 |
| 414633800 | All Fan Skandic except Tundra |
| 417300326 | Tundra RF 300 |
| 415060600 | Tundra RF 500 |
| 417300586 | Tundra RF V-800 |
| 414827600 | Old Tundra 280 Fan |
| ***S-CHASSIS*** | |
| 417300067 | Semi-cogged |
| 414860700 | Not cogged |

**PISTON KIT**

| | |
|---|---|
| 593 HO including SDI | 415129406 |
| Ski 552 | 415129542 |



- Kit includes: piston, rings, piston pin, needle bearing and circlips.



**DRIVE PULLEY CAM FOR QRS ROLLER SECONDARY CAM**

REV-XP

**417126962** • 38°
**417127372** • 42°
**417127367** • 44°
**417127325** • 44°-42°

**417126975** • 44°-33°
**417127426** • 46°-42°
**417127326** • 40°
**417127529** • 44°-40°



- Specially designed for the QRS driven pulley.
- For optimal smooth performance and durability.

**MAINTENANCE KIT FOR TRA DRIVE PULLEY**



- Includes: 1 spring cover assembly, 3 rollers assembly, 1 bushing (siding flange), 6 slider shoes, 6 O-rings, 1 circlip, 3 cotter pins and 3 lever axles.

| MODELS | |
|---|---|
| REV-XP, XR, XS, XM, XU - 2011 (550F), 2011 to 2018 (600 & 600 E-TEC sea-level) | 415129624 |
| REV-XM, XU - 2012 (1200), 2012 to 2018 (600 E-TEC high altitude), 2013 to 2019 Tundra Xtreme | 415129625 |
| REV-XP, XS, XM, XU - 2011 to 2018 (800R P-TEK & 800R E-TEC) | 415129626 |
| REV-XP, XS, XM, XU - 2008 to 2010 (800R P-TEK & 800R E-TEC) | 415129627 |
| REV-XP, XS, XM, XU - 2011 and prior (1200), 2011 and prior (600 E-TEC high altitude) | 415129708 |

**MAINTENANCE KIT FOR DRIVE PULLEY**
*(Not illustrated)*

All 2016 and up eDrive 2 Clutch with heptagonal roller. **415130055**

- Includes: 6 rollers assembly, 12 slider shoes, 3 O-rings.

**FLOATING QRS SHORT SHAFT CONVERSION KIT**

Fits 600 CARB, 600 E-TEC, 800 P-TEK and 800 E-TEC engines **860200832**



- Conversion kit allows installation of a removable floating secondary pulley.
- Also provides ability to remove driven pulley without removing countershaft.
- Includes gun-drilled lightweight shaft and all necessary parts and hardware for conversion.

**EDRIVE 2 CLUTCH**

4-TEC 1200 only 2010 and up **415130054**



- With double the number of rollers and arms compared to TRA designs, this clutch is designed for low maintenance and long life with 4-stroke powertrains.

**NGK[1] SPARK PLUGS**



- You'll see a difference with genuine NGK spark plugs.
- Solid steel terminal reduces the chance of arcing in the plug cap, which may interfere with the electric component.
- A necessity in today's ignition systems.

| MODELS | |
|---|---|
| BR9-ES | 219703120 |
| 600 CARB, 800 P-TEK - BR9-ECS (Gap 0.8 mm) | 415128524 |
| 600 H.O. E-TEC - PZFR6F | 415129375 |
| 1200 4-TEC - CR8EKB | 415129429 |
| 800R E-TEC - PFR7AB | 415129484 |
| 600 ACE - MR7B18 | 415129670 |
| 900 ACE - MR8DI8 | 415129944 |
| 850 E-TEC, 600R E-TEC - ILKR8Q | 415130154 |
| 550F, 600RS - BR9ECS | 512059552 |
| 900 ACE Turbo - LMAR9AI-8 | 715900492 |
| 600 CARB, 800R P-TEK - BR8ECS (Gap 0.8 mm) | 512060029 |
| 600 EFI - BPR8ES | 415130429 |

# ELECTRICAL

## YUASA[1] BATTERIES



- Maintenance free.
- No need to add water but periodic charging required when not in use.
- Absorbed Glass Mat (AGM) Separators—an advanced battery technology that eliminates the need to ever add water.
- Advanced lead-calcium technology—holds its specific gravity more than 3 times longer than conventional lead antimony batteries.

| MODELS | |
|---|---|
| 14 Amps Dry (12N14-3A) | **42215** |
| 20 Amps Dry (Y50N18L-A) | **410301201** |
| 3 Amps Wet (YTX4L-BS) | **410301204** |
| 18 Amps Wet (YTX20L-BS) | **410301203** |
| 18 Amps Wet (YTX20HL-PW) | **415129898** |
| 21 Amps Wet (YTX24HL-BS) | **410922962** |
| 30 Amps. Wet (YIX30L) | **515176151** |

## BATTERY CHARGER/MAINTAINER

**715005061**



- Fully automatic 3A battery charger/maintainer.
- Keeps stored lead-acid batteries charged.
- Charges and maintains small batteries.
- Microprocessor controlled multi-stage charging for added precision, safety and battery life.
- Auto-voltage detection.
- Automatically detects 6V or 12V batteries.
- Float mode monitoring automatically maintains optimum battery charge.
- Reverse hook-up protection helps protect battery and charger from damage.
- Hook attachment hangs outside the work area for safety and convenience.
- Display/on button.
- Press the display button to show the charge progress.
- Energy efficient/eco-friendly meets the highest industry standards for energy efficiency.
- Content: 3A battery charger, clamp adapter, DC adapter, 24" fused ring leads harness with weather cap and user manual.

## JUMP STARTER

**715005062**



- IPX3 water-resistant—ABS + PC plastic and enclosed output ports.
- LED battery indicator—4 LED battery indicators for easy read on battery charge level.
- Compact design/travel bag—this durable case is compact and portable.
- Fits conveniently in the travel bag, your backpack or glovebox.
- Quickly starts vehicles in emergencies.
- Great for water and power sports, motorcycles and 4 and 6 cylinder vehicles.
- 2.4A + 1A/5V USP ports—fast charging.
- Charges all USB devices, including smartphones, MP3 players and tablets.
- Smart cable—provides protection against reverse polarity, short circuit, low voltage, high temperature and reverse charging.
- Built-in LED light (3 modes).
- Content: 300CA jump starter, SA858 smart cable clamp, MC-USB to USB charging cable, travel bag and user manual.

## YUASA[1] SMART SHOT AUTOMATIC BATTERY CHARGER

Automatic 1A (1000 MA) 3-stage charge cycle

**529036481**



- The Yuasa Smart Shot Automatic Battery Charger is available in 1A charge capacity and ensures that optimum power is available from your battery when you need it.
- Charger is supplied with a fused-ring connector, in addition to the alligator clips that can be attached permanently to your battery, making charging and maintaining your battery a snap.




# MAINTENANCE

// MAINTENANCE

**159** OILS & MAINTENANCE PRODUCTS
**162** CARE PRODUCTS



*More information on XPS SKU changes to come this Spring.*

# OILS & MAINTENANCE PRODUCTS

## ENGINE OILS

### XPS 2T E-TEC SYNTHETIC OIL

NEW **9779126/779126** • 1 qt / 946 ml
NEW **9779127/779127** • 1 US gal / 3.785 L
NEW **9779128/779128** • 2.5 US gal / 9.46 L
NEW **9779129/779129** • 5 US gal / 18.92 L
NEW **9779130/779130** • 55 US gal / 205 L



- Specifically engineered to meet the unique needs of Rotax engines, it provides maximum protection against engine wear in E-TEC engines.
- Uses a highly effective package to keep engine parts lubricated, clean and free of wear.
- This low smoke, low odor formula also allows for maximum engine performance.
- Can be used in direct, semi-direct fuel injection system and high performance carburated 2-stroke engines.

### XPS 2T RACING SYNTHETIC OIL

NEW **9779180/779180** • 1 qt / 946 ml
NEW **9779181/779181** • 1 US gal / 3.785 L



- Specially designed for high-performance or racing engines.
- Top-performing synthetic oil is formulated with a highly evolved additive package that includes performance enhancing esters.
- Withstands extreme operating temperatures, high RPM and heavy loads to deliver competition-level engine protection.
- Use in high-performance 2-stroke snowmobiles and off-road motorcycle engines.

### XPS 2T SNOWMOBILE SYNTHETIC BLEND OIL

NEW **9779447/779447** • 1 qt / 946 ml
NEW **9779448/779448** • 1 US gal / 3.785 L
NEW **9779449/779449** • 2.5 US gal / 9.46 L



- Designed for all oil injection or pre-mix 2-stroke snowmobiles with electronic fuel injection or carburated engines.
- Recommended engine oil for Rotax 600 EFI engine.
- Facilitates cold starting with low-smoke emissions.
- Ensures maximum protection against wear by keeping the engine parts lubricated and clean.

### XPS 2T SNOWMOBILE PREMIUM MINERAL OIL

NEW **9779119/779119** • 1 qt / 946 ml
NEW **9779120/779120** • 1 US gal / 3.785 L
NEW **9779121/779121** • 2.5 US gal / 9.46 L
NEW **9779122/779122** • 5 US gal / 18.92 L
NEW **9779123/779123** • 55 US gal / 205 L



- Powersport formula with premium anti-wear and anti-corrosion additives.
- The carefully balanced additives optimize detergency and lubrication through a broad range of operating temperatures.
- Additional corrosion protection for wet environments and during storage.
- Safe for winter/snowmobile use.

### XPS 4T 0W-20 EXTREME COLD SYNTHETIC OIL

NEW **9779145/779145** • 1 qt / 946 ml
NEW **9779146/779146** • 1 US gal / 3.785 L
NEW **9779147/779147** • 5 US gal / 18.92 L
NEW **9779148/779148** • 55 US gal / 205 L




- EXTREME COLD engine oil is state-of-the-art, developed for easier cold starts in the most frigid, harshest winter climates.
- The custom formula promotes fast oil flow from the sump to critical engine components to ease starting.
- Protects 4-stroke snowmobiles, ATVs and power equipment from cold start engine wear.

### XPS 4T 0W-40 SYNTHETIC OIL

NEW **9779139/779139** • 1 qt / 946 ml
NEW **9779140/779140** • 1 US gal / 3.785 L
NEW **9779141/779141** • 5 US gal / 18.92 L
NEW **9779142/779142** • 55 US gal / 205 L
NEW **9779143/779143** • 265 US gal / 1,003 L
NEW **9779144/779144** • 330 US gal / 1,249 L




- Powersport formula with premium anti-wear and anti-corrosion additives.
- The best choice for high-performance snowmobile, ATV and SXS 4-stroke engines used in cold weather.
- Provides superior engine and transmission protection against heat, rust and corrosion.
- Delivers optimal performance in high and low temperatures.

### XPS 4T 0W-40 SYNTHETIC OIL CHANGE KIT

NEW **9779253/779253** • 600 ACE
NEW **9779254/779254** • 900 ACE
NEW **9779255/779255** • 1200 4-TEC



- Ultra-convenient "all-in-one" oil change kit saves time and money.
- Includes XPS Synthetic Oil, oil filter, O-rings and washer.

** Pricing not availbale due to pricing fluctuation of oil based products.*

# MAINTENANCE PRODUCTS

## OIL FILTER

**420956124**



- 900 ACE, 900 ACE Turbo, 600 ACE and 1203 engines.

## UNIVERSAL PRE-MIXED COOLANT

NEW **9779149/779149** • 1 qt / 946 ml



- Antifreeze/coolant contains the correct dilution and the necessary additives to prevent corrosion and inhibit cavitation in powersport cooling systems.
- For vehicles that normally use a 2-year antifreeze/coolant (green).

## EXTENDED LIFE PRE-MIXED COOLANT

NEW **9779150/779150** • 1 qt / 946 ml



- Antifreeze/coolant contains the correct dilution and the necessary additives to prevent corrosion and inhibit cavitation in BRP cooling systems.
- Long-life, 5-year formula specially formulated for BRP vehicles.
- Superior heat transfer.
- Ideal replacement for vehicles that normally use a 2-year antifreeze/coolant (green).
- 5 years (orange).

## DOT 4 BRAKE FLUID

NEW **9779151/779151** • 12 fl. oz. / 355 ml



- Meets or exceeds all DOT3 and DOT4 brake fluid requirements.
- High-temperature formula resists fade, and also conditions seals and O-rings in braking systems.

## RACING BRAKE FLUID RS600

NEW **9779152/779152** • 12 fl. oz. / 355 ml



- Exceeds DOT4 brake fluid requirements for extreme conditions and competition use.
- Extreme, 579-degree boiling point temperature is ideal for high-demand competition conditions to combat brake fade.
- Will not harm seals or braking system components.
- Should be added only to a clean/unfilled system to avoid dilution and diminished performance.
- Low-moisture formula slows water vapor absorption through multiple heat cycles.
- Recommended for use in Ski-Doo and Can-Am racing applications.

## PREMIUM MINERAL CHAINCASE OIL

NEW **9779155/779155** • 8.45 fl. oz. / 250 ml



- Made with high-quality mineral oil stock and contains additives to help lubricate and protect chaincases from wear and corrosion.
- Offers excellent lubrication and complete protection for all Ski-Doo snowmobiles with a conventional chaincase.

** Pricing not availbale due to pricing fluctuation of oil based products.*



## SYNTHETIC CHAINCASE OIL

NEW **9779156/779156** • 12 fl. oz. / 355 ml



- Specially developed for high-performance Ski-Doo models, it represents the best in state-of-the-art chaincase lubrication.
- This multigrade full-synthetic formula flows well at cold temperatures and won't break down at high temperatures.
- Made with additives that protect internal components from wear and corrosion and also conditions seals.
- Not for use in 2-speed snowmobile transmissions on Expedition, Skandic utility models.

## SYNTHETIC GREASE SUSPENSION

NEW **9779163/779163** • 14 oz./ 400 g



- Designed to work specifically with the components found in Can-Am and Ski-Doo vehicles suspensions.
- It is highly stable and offers optimal lubrication at both extreme cold and high temperatures while protecting suspension components from dirt and moisture, as well as corrosion under extreme washout conditions.

## SYNCHROMESH TRANSMISSION SYNTHETIC OIL

NEW **9779170/779170** • 24 fl. oz. / 710 ml



- Uses a unique combination of synthetic base stocks and additives that allow higher loads, superior shear stability and reduced oxidation compared to other synthetics and conventional API GL-5 gear oils.
- Its tremendous thermal stability and constant viscosity give exceptional wear protection and superior performance for excellent low-temperature characteristics and improved gear protection at higher temperatures.
- Recommended for use in all Ski-Doo and Lynx synchromesh transmissions requiring 75W-140 API GL-5 gear oils.
- Offers added assurance during extended drain intervals.
- Exceeds API GL-5 specifications.

## ANTI-CORROSIVE LUBRICANT

NEW **9779166/779166** • US only • 12 oz./ 340 g
NEW **9779167/779167** • Canada only • 12 oz./ 340 g



- Multipurpose lubricant that can also be used to prevent rust, corrosion and moisture intrusion.
- It contains extreme pressure additives that work as an all-around lubricant for just about anywhere lubrication is needed.

## FUEL STABILIZER

NEW **9779171/779171** • 8 fl. oz. / 236 ml



- Ethanol-compatible and will stabilize fuel in your tank to keep it from breaking down and causing hard starting, throttle hesitation and poor run quality.
- Ethanol attracts moisture, and this product contains powerful anti-corrosion additives to protect fuel system components.
- Prevents problems associated with E10 fuels.

## STORAGE OIL

NEW **9779173/779173** • 12 oz./ 350 g



- High-performance fogging oil designed to protect internal engine parts from rust and corrosion.
- It coats engine internals throughout the whole storage period and is burned away through combustion when engine is started.
- Protects engines during non-use or storage.
- Burns complete upon start up.

** Pricing not availbale due to pricing fluctuation of oil based products.*

# CARE PRODUCTS

## ALL-PURPOSE CLEANER AND DEGREASER

NEW **9779328/779328** • 22 fl. oz. / 650 ml
NEW **9779329/779329** • 2 qt / 1.89 L



- Ready-to-use formula.
- Cleans toughest dirt and grime.
- Phosphate-free eco-friendly formula.
- Low-foam easy-rinse formula.

## MATTE FINISH WATERLESS CLEANER

NEW **9779330/779330** • 22 fl. oz. / 650 ml



- Easy waterless use.
- Perfect for matte, flat and denim surfaces.
- Contains no wax or silicone.
- Leaves no unwanted streaks or marks.

## MULTI-SURFACE & GLASS CLEANER

NEW **9779331/779331** • 22 fl. oz. / 650 ml



- Easy waterless spray and wipe use.
- Polymer formula cleans and protects.
- Contains no wax or silicone.
- Leaves no unwanted streaks or marks.

## BLACK PLASTIC & RUBBER RESTORER

NEW **9779335/779335** • 7.6 fl. oz. / 225 ml



- Restores plastic, rubber and vinyl.
- Long-lasting formula.
- Protects against UV rays.

## QUICK DETAILER GLOSS ENHANCING

NEW **9779332/779332** • 4 fl. oz. / 118 ml
NEW **9779333/779333** • 16 fl. oz. / 473 ml



- Quick detail spray wax.
- Leaves a high-gloss finish at every wipe.
- Nanotechnology polymer formula.
- Repels dirt.
- No water needed.

## OFF-ROAD FOAMING WASH

NEW **9779337/779337** • 16 fl. oz. / 473 ml
NEW **9779338/779338** • 2 qt / 1.89 L



- Concentrated formula for off-road vehicles, it produces a thick foam to lift dirt and prevent scratching.
- The pH neutral formula is safe for wax and paint sealants.
- Works in pressure washers or by hand.

## MUD & DUST OFF-ROAD WASH

NEW **9779340/779340** • 33 fl. oz. / 946 ml
NEW **9779341/779341** • 2 qt / 1.89 L



- Specially formulated for off-road vehicles, it breaks the bond holding grime and dirt to your vehicle's finish.
- The formula is biodegradable, eco-friendly with no phosphates or corrosive chemicals and is low-foam for easy, quick rinsing.
- Effective on oil, grease and other stubborn grime.
- Safe for use on all surfaces.



# APPAREL

# // APPAREL


**165** *SIZING CHART*
**166** *TECHNOLOGY GUIDE*
**178** *HELMETS*
**180** *GOGGLES*
**181** *RIDING GEAR DEEP SNOW*
**185** *RIDING GEAR TRAIL*
**193** *RIDING GEAR UTILITY*
**194** *BOOTS AND SOCKS*
**195** *TEKVESTS*
**195** *BAGS*
**196** *BASE LAYERS*
**197** *SPORTSWEAR PERFORMANCE*
**199** *SPORTSWEAR PREMIUM*
**202** *SPORTSWEAR SIGNATURE*
**205** *HEADWEAR*
**207** *KIDS AND TEENS*
**210** *PLAY AND LICENSING PRODUCTS*






# SIZING CHART
## HOW TO MEASURE

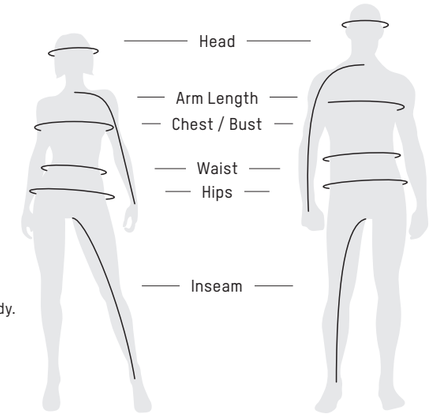


- **For best results, have someone else take your measurements.**
- **Measure body in underwear.**
- **Tape must be snug but not tight.**
- **If measurements fall between two sizes, order the larger size.**

**HEIGHT:** Without shoes, standing with heels and back against a wall.

**HEAD/HELMET:** Around your head, from the center of the forehead, above the ears and over the natural bump at the back of the head.

**ARM LENGTH:** Let the hands hang down on the side in a slightly bent position. Measure from the center of the back of your neck, along the length of your arm, to the wrist.

**CHEST/BUST:** Measure under your arms, around the fullest part of your chest.

**WAIST:** Measure around your natural waistline, keeping one finger between the tape and body.

**HIPS:** Across the fullest part of the seat.

**INSEAM:** Without shoes, from crotch to the floor.

**GLOVES:** Measure palm width.

**BOOTS:** Foot length from heel to toe.

## // WHAT CODE REPRESENTS YOUR SIZE?

1. Find your size.
2. The corresponding code is **THE CODE** you use to complete the part number on your order.
   **Example:** 440227__90
   Size: M = Code "**06**",
   therefore 440227**06**90

| SIZE | CODE |
|---|---|
| One Size | 00 |
| XS | 02 |
| SS | 03 |
| S | 04 |
| MS | 05 |
| M | 06 |
| MT | 07 |
| LS | 08 |

| SIZE | CODE |
|---|---|
| L | 09 |
| LT | 10 |
| XLS | 11 |
| XL | 12 |
| XLT | 13 |
| 2XL | 14 |
| 2XLT | 15 |
| 3XL | 16 |

| SIZE | CODE |
|---|---|
| 3XLT | 17 |
| 4XL | 18 |
| 4XLT | 19 |
| 5XL | 88 |
| 1 | 20 |
| 2 | 21 |
| 3 | 22 |
| 4 | 23 |

| SIZE | CODE |
|---|---|
| 5 | 24 |
| 6 | 25 |
| 7 | 27 |
| 8 | 28 |
| 9 | 29 |
| 10 | 30 |
| 11 | 31 |
| 12 | 32 |

| SIZE | CODE |
|---|---|
| 13 | 33 |
| 14 | 34 |
| 16 | 35 |
| 18 | 78 |
| 3-4 | 79 |
| 5-6 | 52 |
| 6-8 | 48 |
| 7-8 | 54 |

| SIZE | CODE |
|---|---|
| 10-12 | 49 |
| 14-16 | 50 |
| S/M | 72 |
| M/L | 91 |
| L/XL | 73 |

### OUTER, MID & BASE LAYERS + SPORTSWEAR

| MEN'S – REGULAR 5'7"- 6'0" | XS | S | M | L | XL | 2XL | 3XL | 4XL | 5XL |
|---|---|---|---|---|---|---|---|---|---|
| Chest | 33-35 | 35-38 | 38-41 | 41-45 | 45-49 | 49-53 | 53-57 | 57-61 | 61-65 |
| Waist | 27-29 | 29-32 | 32-35 | 35-39 | 39-43 | 43-48 | 48-52 | 52-57 | 57-62 |
| Hips (Seat) | 33-35 | 35-38 | 38-41 | 41-45 | 45-49 | 49-53 | 53-57 | 57-61 | 61-65 |
| Arm Length | 30 | 31 | 32 | 33 | 34 | 35 | 35 | 36 | 36 |
| Inseam | 31 | 31½ | 32 | 32 | 32 | 32 | 32 | 32 | 32 |

| TALL 6'1"- 6'4" | MT | LT | XLT | 2XLT | 3XLT | 4XLT |
|---|---|---|---|---|---|---|
| Chest | 38-41 | 41-45 | 45-49 | 49-53 | 53-57 | 57-61 |
| Waist | 32-35 | 35-39 | 39-43 | 43-48 | 48-52 | 52-57 |
| Hips (Seat) | 38-41 | 41-45 | 45-49 | 49-53 | 53-57 | 57-61 |
| Arm Length | 33½ | 34½ | 35½ | 36½ | 36½ | 37½ |
| Inseam | 34 | 34 | 34 | 34 | 34 | 34 |

| SHORT 5'6" AND BELOW | SS | MS | LS | XLS |
|---|---|---|---|---|
| Chest | 35-38 | 38-41 | 41-45 | 45-49 |
| Waist | 29-32 | 32-35 | 35-39 | 39-43 |
| Hips (Seat) | 35-38 | 38-41 | 41-45 | 45-49 |
| Arm Length | 29½ | 30½ | 31½ | 32½ |
| Inseam | 29½ | 30 | 30 | 30 |

| LADIES' – REGULAR 5'3"–5'8" | XS | S | M | L | XL | 2XL | 3XL | 4XL | 5XL |
|---|---|---|---|---|---|---|---|---|---|
| Chest | 32-35 | 35-37 | 37-40 | 40-43 | 43-47 | 47-51 | 51-55 | 55-59 | 59-63 |
| Waist | 26-29 | 29-31 | 31-34 | 34-37 | 37-42 | 42-46 | 46-51 | 51-55 | 55-60 |
| Hips (Seat) | 35-38 | 38-40 | 40-43 | 43-46 | 46-50 | 50-54 | 54-58 | 58-62 | 62-66 |
| Arm Length | 29 | 30 | 30 | 31 | 31 | 32 | 32 | 33 | 33 |
| Inseam | 30 | 30 | 30 | 30 | 30 | 30 | 30 | 30 | 30 |

| TALL 5'9"- 6'0" | MT | LT | XLT |
|---|---|---|---|
| Chest | 37-40 | 40-43 | 43-47 |
| Waist | 31-34 | 34-37 | 37-42 |
| Hips (Seat) | 40-43 | 43-46 | 46-50 |
| Arm Length | 31½ | 32½ | 32½ |
| Inseam | 32 | 32 | 32 |

| SHORT 5'2" AND BELOW | SS | MS | LS | XLS |
|---|---|---|---|---|
| Chest | 35-37 | 37-40 | 40-43 | 43-47 |
| Waist | 29-31 | 31-34 | 34-37 | 37-42 |
| Hips (Seat) | 38-40 | 40-43 | 43-46 | 46-50 |
| Arm Length | 28½ | 28½ | 29½ | 29½ |
| Inseam | 28 | 28 | 28 | 28 |

| JUNIOR | 2 | 3 | 4 | 5 | 6 | 7 | 8 | 10 | 12 | 14 | 16 | 18 |
|---|---|---|---|---|---|---|---|---|---|---|---|---|
| Height | 2'11" | 3'2" | 3'5" | 3'8" | 3'11" | 4'2" | 4'5" | 4'8" | 4'11" | 5'2" | 5'5" | 5'8" |
| Chest | 21 | 22 | 23 | 24 | 25 | 26 | 27 | 28½ | 30 | 31½ | 33 | 35 |
| Waist | 20 | 20½ | 21 | 21½ | 22 | 22½ | 23 | 24 | 25 | 26 | 27 | 29¾ |
| Hips (Seat) | 21 | 22 | 23 | 24 | 25 | 26 | 27 | 28½ | 30 | 31½ | 33 | 36½ |
| Arm Length | 15½ | 17 | 18½ | 20 | 21½ | 23 | 24½ | 28½ | 30 | 31½ | 33 | 33¾ |
| Inseam | 13½ | 15½ | 17½ | 19½ | 21 | 22¾ | 24½ | 26¼ | 28 | 29½ | 31 | 31½ |

### BOOTS

| MEN'S / UNISEX | 5 | 6 | 7 | 8 | 9 | 10 | 11 | 12 | 13 |
|---|---|---|---|---|---|---|---|---|---|
| EU–Unisex Shoes Size | 37 | 38 | 39.5 | 41 | 42 | 43 | 44.5 | 46 | 47 |
| Foot (in.) | 9 | 9⅜ | 9⅝ | 10 | 10⅜ | 10⅝ | 11 | 11⅜ | 11⅝ |
| Foot (cm) | 23 | 24 | 24.5 | 25.5 | 26.5 | 27 | 28 | 29 | 29.5 |

| LADIES' | 6 | 7 | 8 | 9 | 10 |
|---|---|---|---|---|---|
| | 35.5 | 37 | 38 | 39.5 | 41 |
| | 8⅛ | 9 | 9⅜ | 9⅝ | 10 |
| | 22 | 23 | 24 | 24.5 | 25.5 |

### GLOVES & MITTS

| MEN'S | XS | S | M | L | XL | 2XL | 3XL |
|---|---|---|---|---|---|---|---|
| Palm (in.) | 3 | 3¼ | 3½ | 4 | 4½ | 5 | 5½ |
| Palm (cm) | 7.5 | 8 | 9 | 10 | 11.5 | 13 | 14 |

| LADIES' | XS | S | M | L | XL | 2XL |
|---|---|---|---|---|---|---|
| | 2½ | 2¾ | 3 | 3½ | 4 | 4½ |
| | 6 | 7 | 8 | 9 | 10 | 11.5 |

| KIDS' | 2 | 4 | 6 |
|---|---|---|---|
| Hand circumference (in.) | 4⅜-5 | 5-5⅜ | 5⅜-5¾ |
| Hand length (in.) | 4-4½ | 4½-4¾ | 4¾-5 |

### HELMETS

| MEN'S & LADIES' | XS | S | M | L | XL | 2XL | 3XL |
|---|---|---|---|---|---|---|---|
| Head (in.) | 20⅞–21¼ | 21⅜–22 | 22⅛–22¾ | 23⅛–23⅝ | 24–24⅜ | 24¾–25⅛ | 25½–25⅞ |
| Head (cm) | 53–54 | 55–56 | 57–58 | 59–60 | 61–62 | 63–64 | 65–66 |

### SOCKS

| | S | M | L |
|---|---|---|---|
| Men's | — | 6–9½ | 10–13 |
| Ladies' | 4–8 | 8½–12 | — |

| | S/M | L/XL |
|---|---|---|
| Kids | 9½–12½ | 13–3 |

# PYRA HELMET

*// KEY BENEFITS*

LIGHTWEIGHT · ACCESSIBLE · DOT AND ECE CERTIFIED

*// USAGE*

DEEP SNOW, RACING

*// PRODUCT PERFORMANCE*

WARMTH · AIRFLOW · LIGHTWEIGHT




*// ERT*

Energy reduction technology helps absorb the shock in the case of a fall from both direct and rotational impacts.

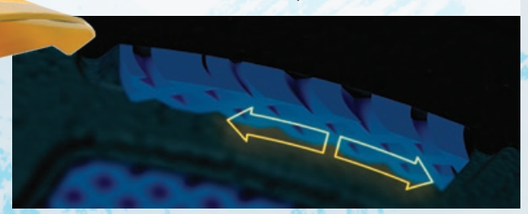

*// AIRFLOW*

Don't sweat the ride with an open chin, removable wind deflector and rear vents.






**929041**
YELLOW (10)




**929041**
RED (30)




**929041**
INDIGO BLUE (82)



**929041**
CHARCOAL GREY (07)




**929041**
GREY (09)



# EXOME HELMET

*// KEY BENEFITS*

HEATED AND NON HEATED · FOG FREE · CERTIFIED DOT

*// USAGE*

TRAIL

*// PRODUCT PERFORMANCE*

WARMTH · AIRFLOW · LIGHTWEIGHT




*// MODULARITY*

This modular helmet makes it easy for you to talk, eat and ride without taking your helmet off! Open the visor, the chin and the interior mask to adapt to your ride.



*// AIRFLOW*

The optimized mask system sucks out the moisture within your helmet for a fog free experience. The vents also allow for you to customize the air intake easily.

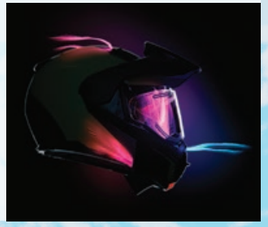

*// EXOME*



**929035**
BLACK (90)



**929074**
WHITE (01)

*// EXOME SPORT*



**929036**
YELLOW (10)



**929036**
RED (30)



**929036**
INDIGO BLUE (82)



**929036**
CHARCOAL GREY (07)



**929036**
GREY (09)

*// EXOME SPORT RADIANT*



**929037**
YELLOW (10)



**929037**
RED (30)



**929037**
INDIGO BLUE (82)



**929037**
CHARCOAL GREY (07)



**929037**
GREY (09)



BC SERIES
BY ski-doo

# MADE FOR DEEP SNOW

Our gear is born and tested in the most extreme and legendary environments of British Columbia—the aspirational mecca of big mountain riding for snowmobilers and hybrid users, all around the snowbelt of the Northern Hemisphere.

3D ENGINEERED FIT

ELEMENT PROOF

HIGH AIRFLOW

sympatex®
3 LAYER FABRIC SHELL

***BC: INSPIRED BY BRITISH COLUMBIA'S BACKCOUNTRY, BUILT BEYOND CONVENTION.***

## SPORT

*// BC KONA*

The Helium design principles inspired the foundation of the collection with a more competitive price.

MEN'S



LADIES'



## SPORT VERSATILITY

*// BC KONA +*

The Swiss Army Knife of jackets. Customize the features to your riding style and/or lifestyle.

MEN'S



## PRO COLLECTION

*// BC ASPECT*

Max mobility and stretch in a lightweight yet durable 3L design. Engineered in the lab, perfected in the field.

MEN'S



# BC KONA

***THE MOST COMPETITIVE 2 LAYER SYMPATEX, ONE PIECE SUIT AND JACKET/ PANT COMBO. BUILT FOR DEEP SNOW WITH SPECIFIC FIT, FLEX AND FEATURES.***

*// KEY BENEFITS*

ELEMENT PROOF

HIGH AIRFLOW

LIGHTWEIGHT

*// USAGE*

DEEP SNOW MOUNTAINS

*// PRODUCT PERFORMANCE*

WARMTH

WATERPROOFNESS

BREATHABILITY



**440932**
**MEN'S BC KONA ONE PIECE SUIT**
BLACK (90), BRICK RED (33), DEEP PURPLE (42), INDIGO BLUE (82)



**440931**
**MEN'S BC KONA JACKET**
ARMY GREEN (77), BLACK (90), DEEP PURPLE (42), INDIGO BLUE (82)



**440943**
**LADIES' BC KONA JACKET**
ARMY GREEN (77), BRICK RED (33), DEEP PURPLE (42)



**441682**
**LADIES' BC KONA HIGHPANTS**
BLACK (90)



**441672**
**MEN'S BC KONA HIGHPANTS**
BLACK (90), DARK NAVY (16), INDIGO BLUE (82)



# BC KONA +

***OUR MOST VERSATILE JACKET IN OUR OFFERING, WITH REMOVABLE POWDER SKIRT, REMOVABLE HOOD, LAZER CUT WRIST GATOR, THIS JACKET IS STYLED SO YOU CAN LOOK GREAT ON AND OFF THE MOUNTAIN.***

*// KEY BENEFITS*

ELEMENT PROOF

HIGH AIRFLOW

MULTI-USE

*// USAGE*

DEEP SNOW MOUNTAINS

*// PRODUCT PERFORMANCE*

WARMTH

WATERPROOFNESS

BREATHABILITY



**440959**
**MEN'S BC KONA + JACKET**
BURGUNDY (35), INDIGO BLUE (82), WHISKEY (28)



**446323**
**MEN'S GRIP GLOVES**
BLACK (90)



**446364**
**MEN'S MOUNTAIN GLOVES**
BLACK (90)

# BC ASPECT

***BUILT BY THE PROS FOR THE PROS. THIS COLLECTION IS EXTREMELY LIGHTWEIGHT AND STRETCHY, THE FIT HAS BEEN FULLY TESTED AND OPTIMIZED FOR EVEN THE MOST HARD CORE DEEP SNOW RIDERS.***

*// KEY BENEFITS*

- ELEMENT PROOF
- MAX AIRFLOW
- NO FRILLS SHELL
- MAX MOBILITY

*// USAGE*

DEEP SNOW MOUNTAINS

*// PRODUCT PERFORMANCE*

- WARMTH
- WATERPROOFNESS
- BREATHABILITY



**440942**
**MEN'S BC ASPECT ONE PIECE SUIT**
BLACK (90), BRICK RED (33), DEEP PURPLE (42), INDIGO BLUE (82)



**446352**
**MEN'S BC ASPECT LONG GLOVES**
BLACK (90)



**446354**
**MEN'S BC ASPECT SHORT GLOVES**
BLACK (90)



**440940**
**MEN'S BC ASPECT JACKET**
BLACK (90), BRICK RED (33), DARK NAVY (16), INDIGO BLUE (82)



**441678**
**MEN'S BC ASPECT HIGHPANTS**
BLACK (90), BRICK RED (33)



# sympatex® MEMBRANE

**Discover the performance of Sympatex membrane.**

sympatex®

**PERFORMANCE AND SUSTAINABILITY GO HAND IN HAND**

***LIFETIME WARRANTY***

***PTFE-FREE AND PFC-FREE MEMBRANES AND LAMINATES***

***100% RECYCLABLE MEMBRANE AND LAMINATES***

***100% WINDPROOF AND WATERPROOF PROTECTION***

***OPTIMALLY BREATHABLE***







***WWW.SYMPATEX.COM***

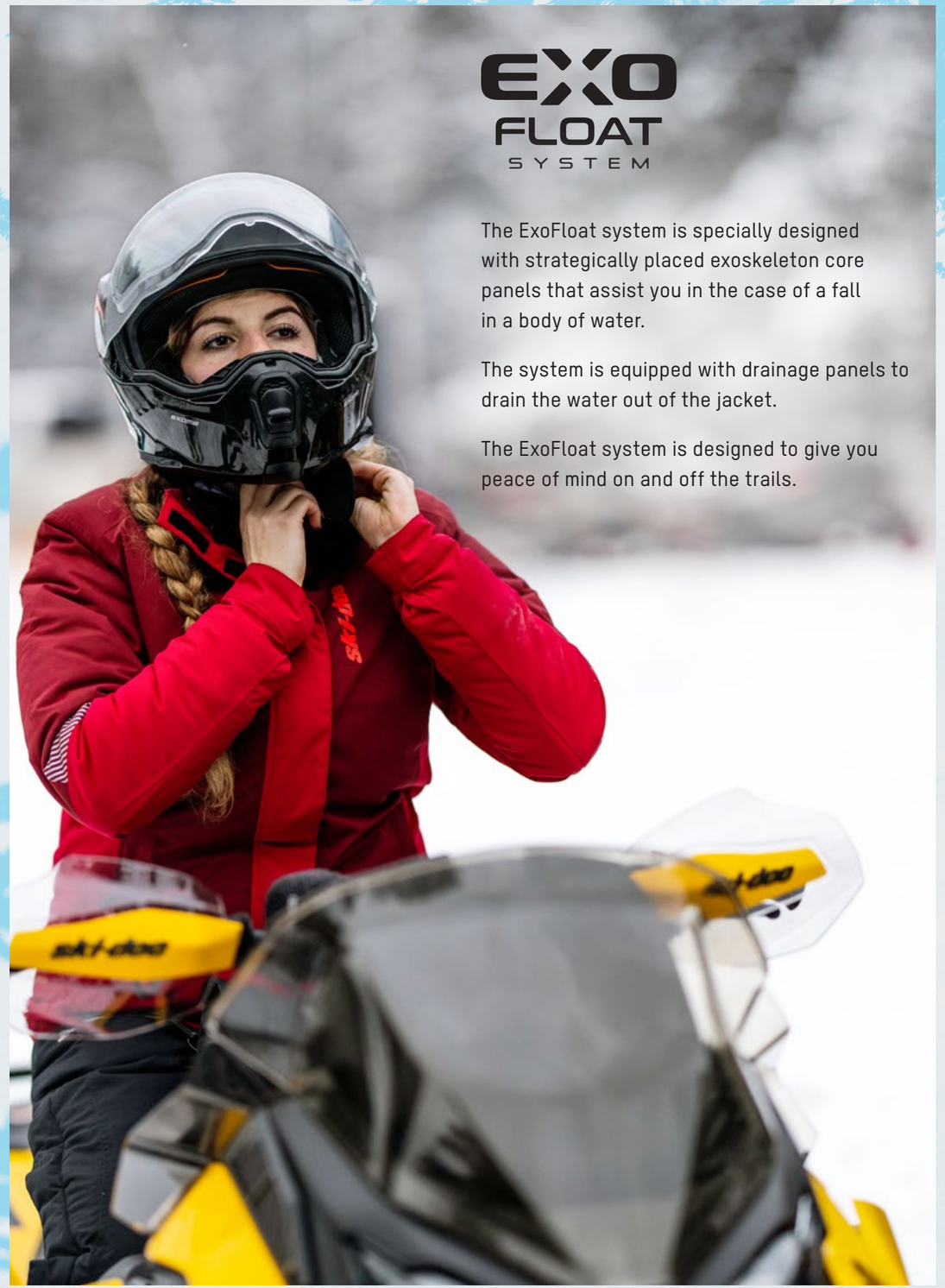

EXO FLOAT SYSTEM

The ExoFloat system is specially designed with strategically placed exoskeleton core panels that assist you in the case of a fall in a body of water.

The system is equipped with drainage panels to drain the water out of the jacket.

The ExoFloat system is designed to give you peace of mind on and off the trails.

# VASA

*// KEY BENEFITS*

STAYS AFLOAT

GREAT VALUE

REFLECTIVE

*// USAGE*

TRAIL

*// PRODUCT PERFORMANCE*

WARMTH

WATERPROOFNESS

BREATHABILITY



**440934**
**MEN'S VASA JACKET**
BLACK (90), GREEN (70), INDIGO BLUE (82), KHAKI (05)



**441674**
**MEN'S VASA HIGHPANTS**
BLACK (90), DARK NAVY (16)



**440944**
**LADIE'S VASA JACKET**
BLACK (90), BURGUNDY (35), DARK NAVY (16)



**441683**
**LADIES' VASA HIGHPANTS**
BLACK (90), DARK NAVY (16)

# EXPEDITION

### // KEY BENEFITS

TEMPERATURE REGULATION | WINDPROOF | REINFORCED | REFLECTIVE

### // USAGE

TRAIL
UTILITY

### // PRODUCT PERFORMANCE

- WARMTH
- WATERPROOFNESS
- BREATHABILITY



**440982**
**MEN'S EXPEDITION RADIANT JACKET**
**CLIM8 TECHNOLOGY**
BLACK (90)



**446346**
**EXPEDITION RADIANT GLOVES**
**CLIM8 TECHNOLOGY**
BLACK (90)



**488100**
**1 BATTERY PACK**
**FOR HEATED GEAR**
BLACK (90)



**440964**
**MEN'S EXPEDITION JACKET**
BLACK (90), KHAKI (05)



**446337**
**MEN'S EXPEDITION GLOVES**
BLACK (90), KHAKI (05)



**286814**
**MEN'S EXPEDITION HIGHPANTS**
BLACK (90), KHAKI (05)






clim8®
intelligent thermal technology inside

U.S. PATENT NO. 10,721,977

***clim8® IS AN INTELLIGENT HEATED GARMENT, THE AUTONOMOUS HEATING SYSTEM IS INTEGRATED INTO THIS GARMENT AND IS RESPONSIVE TO YOU. SET YOUR IDEAL TEMPERATURE AND LET clim8® DO THE WORK!***




### *3 KEY MESSAGES ABOUT clim8® THE TECHNOLOGY*

**intelligent heat**
clim8® autonomous heating system seamlessly integrated in your garment and responsive to you.

**smart app control**
for a personalized smart heating experience in real-time thanks to the clim8® mobile app.

**design backed by science**
body heat mapping by clim8® lab for optimal thermal comfort

# HELMETS

## HELMETS

### NEW PYRA HELMET

DOT ECE 22.06

**929041** • XS, S, M, L, XL, 2XL, 3XL

Charcoal Grey (**07**), Grey (**09**), Indigo Blue (**82**), Red (**30**), Yellow (**10**)



**Description:**
- Pyra Helmet (DOT/ECE) with plastic Composite shell.

**Features and technologies:**
- 4-year limited warranty.
- Advanced plastic composite shell with rotational impact absorbing system (ERT).
- Adjustable peak system.
- Removable wind deflector.
- Front and rear hi-max air vent system to maximize cooling.
- Removable, washable and replaceable moisture-wicking liner.
- Lightweight double-D chin strap.
- Weight: 1,295 grams for size Large.
- DOT/ECE 2206 certified.

### NEW EXOME HELMET

DOT

**929035** • XS, S, M, L, XL, 2XL, 3XL — Black (**90**)

**929074** • XS, S, M, L, XL, 2XL, 3XL — White (**01**)



**Description:**
- Exome Helmet (DOT) with plastic Composite shell.

**Features and technologies:**
- 4-year limited warranty.
- Advanced plastic composite shell.
- Modular helmet.
- Breath Evac fog-resistant mask system.
- Dual lens anti-fog visor.
- Offered with amber sun visor for best vision in snow conditions.
- 2 shell sizes for better fit and comfort.
- Quick-release chin strap.
- Eyeglasses ready.
- Includes 5 absorbent pads for the breath Evac mask.
- D.O.T. certified.

### NEW EXOME SPORT HELMET

DOT

**929036** • XS, S, M, L, XL, 2XL, 3XL

Charcoal Grey (**07**), Grey (**09**), Indigo Blue (**82**), Red (**30**), Yellow (**10**)



**Description:**
- Exome Sport Helmet (DOT) with plastic Composite shell.

**Features and technologies:**
- 4-year limited warranty.
- Advanced plastic composite shell.
- Modular helmet.
- Breath Evac fog-resistant mask system.
- Removeable peak.
- Dual lens anti-fog visor.
- Offered with amber sun visor for best vision in snow conditions.
- 2 shell sizes for better fit and comfort.
- Quick-release chin strap.
- Eyeglasses ready.
- Includes 5 absorbent pads for the breath Evac mask.
- D.O.T. certified.

### NEW EXOME SPORT RADIANT HELMET

DOT

**929037** • XS, S, M, L, XL, 2XL, 3XL

Charcoal Grey (**07**), Grey (**09**), Indigo Blue (**82**), Red (**30**), Yellow (**10**)



**Description:**
- Exome Sport Radiant Helmet (DOT) with plastic Composite shell.

**Features and technologies:**
- 4-year limited warranty.
- Advanced plastic composite shell.
- Modular helmet.
- Breath Evac fog-resistant mask system.
- Removeable peak.
- Dual lens Radiant electric heated anti-fog visor.
- Offered with amber sun visor for best vision in snow conditions.
- 2 shell sizes for better fit and comfort.
- Quick-release chin strap.
- Eyeglasses ready.
- Includes 5 absorbent pads for the breath Evac mask.
- D.O.T. certified.



### OXYGEN HELMET

DOT

**929019** • XS, S, M, L, XL, 2XL, 3XL

Black (**90**), Matte Black (**93**), White (**01**)



**Description:**
- Oxygen Helmet (DOT) with M-FORGE Composite shell.

**Features and technologies:**
- 4-year limited warranty.
- Lightweight M-FORGE® Composite shell.
- Sun visor heated chamber.
- Amplified heated visor with pivot contact system.
- Retractable amber sun visor.
- Prescription eyeglasses friendly.
- Adjustable humidity extractor vents.
- Unobstructed panoramic field of vision for an incredible mask-less riding experience.
- Durable anti-fog and anti-scratch coatings.
- NCS System: Reduces noise.
- Robust detents allow precise opening adjustments for airflow.
- Optional front LED utility light.
- Neck skirt to reduce air intrusion.
- Lightweight battery-less rear LED light for added rider safety.
- E LinQ rear magnet connector.
- Unique remote control with visor heat indicators.
- Offered with amber sun visor for best vision in snow conditions.
- Ready to receive communication system.
- Operate all features with gloved hands.
- 2 shell sizes for better fit and comfort.
- Ratcheting quick-release chin strap.
- Recyclable helmet shell for minimal environmental impact.
- Aerodynamic shape to reduce neck fatigue.
- 1,800 g ± for size large.
- D.O.T. certified.

### OXYGEN SE HELMET

DOT

**929027** • XS, S, M, L, XL, 2XL, 3XL

Army Green (**77**), Lava Red (**17**)



**Description:**
- Oxygen SE Helmet (DOT) with M-FORGE Composite shell.

**Features and technologies:**
- 4-year limited warranty.
- Special edition; includes a rear removeable curtain, a vent in the chin curtain for extra airflow, exclusive colors and a softer interior.
- Lightweight M-FORGE® Composite shell.
- Sun visor heated chamber.
- Amplified heated visor with pivot contact system.
- Retractable amber sun visor.
- Prescription eyeglasses friendly.
- Adjustable humidity extractor vents.
- Unobstructed panoramic field of vision for an incredible mask-less riding experience.
- Durable anti-fog and anti-scratch coatings.
- NCS System: Reduces noise.
- Robust detents allow precise opening adjustments for airflow.
- Optional front LED utility light.
- Neck skirt to reduce air intrusion.
- Lightweight battery-less rear LED light for added rider safety.
- E LinQ rear magnet connector.
- Unique remote control with visor heat indicators.
- Offered with amber sun visor for best vision in snow conditions.
- Ready to receive communication system.
- Operate all features with gloved hands.
- 2 shell sizes for better fit and comfort.
- Ratcheting quick-release chin strap.
- Recyclable helmet shell for minimal environmental impact.
- Aerodynamic shape to reduce neck fatigue.
- 1,850 g ± for size large.
- D.O.T. certified.

### NEW OXYGEN CARBON HELMET

DOT

**929028** • XS, S, M, L, XL, 2XL, 3XL

Black (**90**)



**Description:**
- Oxygen Carbon Helmet with M-FORGE carbon composite shell.

**Features and technologies:**
- 4-year limited warranty.
- Lightweight CARBON M-FORGE® Composite shell.
- Sun visor heated chamber.
- Amplified heated visor with pivot contact system.
- Retractable amber sun visor.
- Prescription eyeglasses friendly.
- Adjustable humidity extractor vents.
- Unobstructed panoramic field of vision for an incredible mask-less riding experience.
- Durable anti-fog and anti-scratch coatings.
- NCS System: Reduces noise.
- Robust detents allow precise opening adjustments for airflow.
- Optional front LED utility light.
- Large neck skirt with vent.
- Rear removeable curtain.
- Lightweight battery-less rear LED light for added rider safety.
- E LinQ rear magnet connector.
- Unique remote control with visor heat indicators.
- Offered with amber sun visor for best vision in snow conditions.
- Ready to receive communication system.
- Operate all features with gloved hands.
- 2 shell sizes for better fit and comfort.
- Ratcheting quick-release chin strap.
- Recyclable helmet shell for minimal environmental impact.
- Aerodynamic shape to reduce neck fatigue.
- 1,750 g ± for size large.
- D.O.T. certified.

# GOGGLES

## ORIGINAL



### NEW FLINT RADIANT GOGGLES

| | |
|---|---|
| **448751** • One size | Black (**90**) |

**Features and technologies:**
- Heated Radiant Electric lens.
- Features Injection-molded PC cylindrical lens.
- Anti-scrtach, anti-fog performance while provides distortion free vision and enhanced impact resistance.
- Thermo-formed 3 layers face foam offers best fitting.
- No-slip silicone strap keeps goggles in place.
- Removable nose guard for extra deflection against roost and debris.



### SKI-DOO TRENCH GOGGLES

| | |
|---|---|
| **448723** • One size | Black (**90**), Brick Red (**33**), Grey (**09**), Indigo Blue (**82**) |

**Features and technologies:**
- Features injection double lens which is anti-scratch, anti-fog and distortion free optics.
- Thermo-formed 3 layers face foam offers best fitting.
- No-slip silicone strap keeps goggles in place.
- Injection-molded PC cylindrical lens provides distortion free vision and enhanced impact resistance.
- A vibrant lens tint with light silver mirror that increase visual acuity in extremely flat and low light conditions.
- Removable nose guard for extra deflection against cold and debris.



### NEW EDGE GOGGLES

| | |
|---|---|
| **448724** • One size | Brick Red (**33**), Indigo Blue (**82**), Yellow (**10**) |

**Features and technologies:**
- Features Injection-molded PC cylindrical lens.
- Anti-scrtach, anti-fog performance while provides distortion free vision and enhanced impact resistance.
- Thermo-formed 3 layers face foam offers best fitting.
- No-slip silicone strap keeps goggles in place.
- Removable nose guard for extra deflection against roost and debris.
- Bonus lens included: A vibrant lens tint with light silver mirror that increase visual acuity in extremely flat and low light conditions.

## NEW XL VERSIONS



### NEW FLINT XL RADIANT GOGGLES

| | |
|---|---|
| **448763** • One size | Black (**90**) |

**Features and technologies:**
- Heated Radiant Electric lens.
- Features Injection-molded PC cylindrical lens.
- Anti-scrtach, anti-fog performance while provides distortion free vision and enhanced impact resistance.
- Thermo-formed 3 layers face foam offers best fitting.
- No-slip silicone strap keeps goggles in place.
- Removable nose guard for extra deflection against roost and debris.
- XL version is ideal for colder weather covering mor space between the goggle and the helmet.



### NEW SKI-DOO TRENCH XL GOGGLES

| | |
|---|---|
| **448761** • One size | Black (**90**), Brick Red (**33**), Grey (**09**), Indigo Blue (**82**) |

**Features and technologies:**
- Features injection double lens which is anti-scratch, anti-fog and distortion free optics.
- Wider thermo-formed 3 layers face foam offers best fitting.
- No-slip silicone strap keeps goggles in place.
- Injection-molded PC cylindrical lens provides distortion free vision and enhanced impact resistance.
- A vibrant lens tint with light silver mirror that increase visual acuity in extremely flat and low light conditions.
- Removable nose guard for extra deflection against cold and debris.
- XL version is ideal for colder weather covering mor spacee between the goggle and the helmet.



### NEW EDGE XL GOGGLES

| | |
|---|---|
| **448762** • One size | Brick Red (**33**), Indigo Blue (**82**), Yellow (**10**) |

**Features and technologies:**
- Features Injection-molded PC cylindrical lens.
- Anti-scrtach, anti-fog performance while provides distortion free vision and enhanced impact resistance.
- Wider thermo-formed 3 layers face foam offers best fitting.
- No-slip silicone strap keeps goggles in place.
- Removable nose guard for extra deflection against roost and debris.
- XL version is ideal for colder weather covering mor space between the goggle and the helmet.
- Bonus lens included: A vibrant lens tint with light silver mirror that increase visual acuity in extremely flat and low light conditions.



# RIDING GEAR DEEP SNOW

## JACKETS

MEN'S

### NEW BC KONA JACKET

**440931** • XS, S, M, L, XL, 2XL, 3XL

Army Green (**77**), Black (**90**), Deep Purple (**42**), Indigo Blue (**82**)



**Description and terrain:**
- Flexible and versatile shell.
- Use for Deep snow riding.

**Features and technologies:**
- Sympatex membrane 100% waterproof, breathable and windproof.
- 2-ply Sympatex membrane technology with lifetime warranty.
- 100% sealed seams and logos.
- Water-resistant zippers.
- Airflow vents (air in at front, air out at back tricep).
- Powder skirt.
- Backpack-friendly underarm venting.
- Offset front zipper for optimal comfort at chin.
- Reflective details for optimized visibility.
- 2 side pockets placed high for avalanche backpack strap.
- 2-way adjustment hood, integrated hood.
- E LinQ system.
- Laser-cut wrist gaiter.
- Inside cell phone pocket.
- Inside beanie pocket.
- Goggle wipe inside chest pocket.
- D-ring.

**Performance:**

Waterproofness | Breathability | Warmth

**Key benefits:**

Element Proof | High Airflow | Lightweight

### NEW BC KONA ONE PIECE SUIT

**440932** • XS, S, M, L, XL, 2XL, 3XL

Black (**90**), Brick Red (**33**), Deep Purple (**42**), Indigo Blue (**82**)



**Description and terrain:**
- Flexible and versatile shell.
- Use for Deep snow riding.

**Features and technologies:**
- Sympatex membrane 100% windproof, breathable and waterproof.
- 2 ply Sympatex membrane technology with lifetime warranty.
- Reinforcement in Cordura fabric at seat, crotch and bottom hem.
- 100% sealed seams and logos.
- Water-resistant zippers.
- Removable suspenders.
- Backpack-friendly underarm venting and chest vents.
- Collar extension zipper, off-set.
- Reflective details for optimized visibility.
- 2 side pockets placed high for avalanche backpack strap
- Cargo sized pockets with one radio holder, an elastic and a key loop.
- Preshaped knees and sleeves.
- 2-in-1 adjustable and removable hood.
- Laser-cut wrist gaiter.
- Inside cell phone pocket.
- Adjustable waistband.
- Boot gaiters and ankle adjustment.
- D-ring.

**Performance:**

Waterproofness | Breathability | Warmth

**Key benefits:**

Element Proof | High Airflow | Reinforced

LADIES'

### NEW LADIES' BC KONA JACKET

**440943** • XS, S, M, L, XL, 2XL, 3XL

Army Green (**77**), Brick Red (**33**), Deep Purple (**42**)



**Description and terrain:**
- Flexible and versatile shell.
- Use for Deep snow riding.

**Features and technologies:**
- Sympatex membrane 100% waterproof, breathable and windproof.
- 2-ply Sympatex membrane technology with lifetime warranty.
- 100% sealed seams and logos.
- Water-resistant zippers.
- Powder skirt.
- Backpack-friendly underarm venting.
- Offset front zipper for optimal comfort at chin.
- Reflective details for optimized visibility.
- 2 side pockets placed high for avalanche backpack strap.
- 2-way adjustment hood, integrated hood.
- E LinQ system.
- Laser-cut wrist gaiter.
- Inside cell phone pocket.
- Inside beanie pocket.
- Goggle wipe inside chest pocket.
- D-Ring.

**Performance:**

Waterproofness | Breathability | Warmth

**Key benefits:**

Element Proof | High Airflow | Lightweight

## JACKETS

### MEN'S

#### NEW BC KONA + JACKET

**440959** • XS, S, M, L, XL, 2XL, 3XL

Burgundy (**35**), Indigo Blue (**82**), Whiskey (**28**)



**Description and terrain:**
- Flexible and versatile shell.
- Use for Deep snow riding.

**Features and technologies:**
- Sympatex membrane 100% waterproof, breathable and windproof.
- 2-ply Sympatex membrane technology with lifetime warranty.
- 100% sealed seams.
- 2-in-1 adjustable and removable hood.
- Removable powder skirt.
- Vent system at tricep with waterproof zipper.
- Reflective details for optimized visibility.
- 2 hand pockets for lifestyle use.
- Chest pocket placed high for avalanche backpack strap.
- Pocket on forearm.
- Collar extension zipper, off-set.
- E LinQ system.
- Laser-cut wrist gaiter.
- Inside cell phone pocket.
- Inside beanie pocket.
- D-Ring.

**Performance:**

Waterproofness | Breathability | Warmth

**Key benefits:**

Element Proof | High Airflow | Multi-use

#### NEW BC ASPECT JACKET

**440940** • XS, S, M, L, XL, 2XL, 3XL

Black (**90**), Brick Red (**33**), Dark Navy (**16**), Indigo Blue (**82**)



**Description and terrain:**
- Flexible and versatile top quality shell.
- Use for Deep snow riding.

**Features and technologies:**
- Sympatex Membrane 100% waterproof, breathable and windproof.
- 3 ply Sympatex Toulon membrane technology with lifetime warranty.
- 100% seams and logos sealed.
- 3-way adjustment hood, integrated hood.
- Water resistant zippers.
- Airflow vents (air in at front, air out at back tricep).
- Reflective details for optimized visibility.
- Chest pocket, small pocket on forearm and cell phone pocket inside.
- E LinQ system.
- Collar extension snap with perforation venting holes.
- Hood fit with regular helmet size.
- Inside beanie pocket.
- D-ring.

**Performance:**

Waterproofness | Breathability | Warmth

**Key benefits:**

No-frills shell | Max airflow | Max mobility

#### NEW BC ASPECT ONE PIECE SUIT

**440942** • XS, S, M, L, XL, 2XL, 3XL

Black (**90**), Brick Red (**33**), Deep Purple (**42**), Indigo Blue (**82**)



**Description and terrain:**
- Flexible and versatile shell.
- Use for Deep snow riding.

**Features and technologies:**
- Sympatex Membrane 100% waterproof, breathable and windproof.
- 3 ply Sympatex Toulon membrane technology with lifetime warranty.
- Reinforcement in Cordura fabric at bottom hem.
- 100% sealed seams and logos.
- Water-resistant zippers.
- 3-way adjustment hood, integrated hood.
- Removable suspenders.
- Backpack-friendly underarm venting.
- Airflow vents (air in at front, air out at back tricep).
- Full-length 2-way zipper at side leg.
- Storm gaiters and adjusment at ankle.
- Cargo sized pockets and beacon/radio pockets holder.
- 2 side pockets placed high for avalanche backpack strap and an inside cell phone pocket.
- Reflective details for optimized visibility.
- E LinQ system.
- Articulated sleeves and knees.
- Goggle wipe inside pocket.
- Improved boot strap adjustment and boot hook.
- Adjustable waistband.
- Inside beanie pocket.
- D-Ring.

**Performance:**

Waterproofness | Breathability | Warmth

**Key benefits:**

No-frills shell | Max airflow | Max mobility



### MEN'S

#### MCODE JACKET

**440958** • S, M, L, XL, 2XL, 3XL

Black (**90**), Dark Navy (**16**), Denim Blue (**79**)



**Description and terrain:**
- 3-in-1 construction that combines a shell and a zipped-in puffy jacket.
- Use for crossover.

**Features and technologies:**
- 100% waterproof, breathable and windproof.
- 200 g of ThermaLoft® insulation in removable puffy jacket.
- Seams and logos 100% sealed.
- 360° reflective details for maximum visibility.
- 2-way zipper to improve comfort in sitting position.
- E LinQ system.
- Puffer with contrast panels.
- Reflective elements.
- Bonded fleece at back collar.
- Inside cell phone pocket.
- Laser-cut wrist gaiter.
- D-Ring.

**Performance:**

Waterproofness | Breathability | Warmth

**Key benefits:**

Windproof | Reflective | Multi-use

### LADIES'

#### LADIES' MCODE JACKET

**440949** • XS, S, M, L, XL, 2XL, 3XL

Dark Navy (**16**), Deep Purple (**42**)



**Description and terrain:**
- 3-in-1 construction that combines a shell and a zipped-in puffy jacket.
- Use for crossover.

**Features and technologies:**
- 100% waterproof, breathable and windproof.
- 200 g of ThermaLoft® insulation in removable puffy jacket.
- Seams and logos 100% sealed.
- 360° reflective details for maximum visibility.
- 2-way zipper to improve comfort in sitting position.
- E LinQ system.
- Puffer with contrast panels.
- Reflective elements.
- Bonded fleece at back collar.
- Inside cell phone pocket.
- Laser-cut wrist gaiter.
- D-Ring.

**Performance:**

Waterproofness | Breathability | Warmth

**Key benefits:**

Windproof | Reflective | Multi-use

## HIGHPANTS

### MEN'S

#### NEW BC KONA HIGHPANTS

**441672** • XS, S, M, L, XL, 2XL, 3XL

Black (**90**), Dark Navy (**16**), Indigo Blue (**82**)



**Description and terrain:**
- Flexible and adaptable shell.
- Use for Deep snow riding.

**Features and technologies:**
- 2-ply Sympatex membrane with lifetime warranty.
- Reinforcement in Cordura fabric at seat, crotch and bottom hem.
- 100% sealed seams and logos.
- Stretch fabric at side bib for extra comfort.
- Fleece at seat.
- Shaped knees.
- Storm gaiters with boot to lace snap connector.
- Reinforcement at inner legs, seat, knees, shins and bottom hem for abrasion resistance.
- 2-way knee-high water-resistant side zippers.
- 2-way front zipper.
- Reflective details for optimized visibility.
- Cargo pocket with ease pleat.
- Suspenders with 1 side adjustment.
- Bib pocket for smaller items.

**Performance:**

Waterproofness | Breathability | Warmth

**Key benefits:**

Element Proof | Optimized mobility | Reinforced

### LADIES'

#### NEW LADIES' BC KONA HIGHPANTS

**441682** • XS, S, M, L, XL, 2XL, 3XL

Black (**90**)



**Description and terrain:**
- Flexible and adaptable shell.
- Use for Deep snow riding.

**Features and technologies:**
- 2-ply Sympatex membrane with lifetime warranty.
- 100% sealed seams and logos.
- Stretch fabric at side bib for extra comfort.
- Fleece at seat.
- Shaped knees.
- Storm gaiters with boot to lace snap connector.
- Reinforcement at inner legs, seat, knees, shins and bottom hem for abrasion resistance.
- 2-way full-lenght water-resistant side zippers.
- Reflective details for optimized visibility.
- 1 side drop seat.
- Cargo pocket with ease pleat.
- Suspenders with 1 side adjustment.
- Bib pocket for smaller items.

**Performance:**

Waterproofness | Breathability | Warmth

**Key benefits:**

Element Proof | Optimized mobility | Reinforced

## HIGHPANTS

MEN'S

### NEW BC ASPECT HIGHPANTS

**441678** • XS, S, M, L, XL, 2XL, 3XL

Black (**90**), Brick Red (**33**)



**Description and terrain:**
- Flexible and adaptable shell.
- Use for Deep snow riding.

**Features and technologies:**
- 3 ply Sympatex Toulon membrane technologies with lifetime warranty.
- Reinforcement in Cordura fabric at bottom hem.
- 100% seams and logos sealed.
- 2 thigh vents.
- Bib pocket, 2 hand pockets & thigh cargo pocket.
- Elastic radio holder in cargo pocket, with webbing loop.
- Waist buckle adjustment.
- Suspenders with 1 side adjustment.
- 2-way full-length side zippers at leg.
- 2-way front zipper.
- Stretch fabric at side bib for extra comfort.
- Storm gaitor, boot hook and adjustment at ankle.

**Performance:**

Waterproofness | Breathability | Warmth

**Key benefits:**

No-frills shell | Max airflow | Max mobility

## HANDWEAR

MEN'S

### MOUNTAIN GLOVES

**446364** • S, M, L, XL, 2XL, 3XL

Black (**90**)



**Description and terrain:**
- Thin glove with good dextirity.
- Use for trail and Deep snow riding.

**Features and technologies:**
- Inside adhesive technology for a better grip control.
- Mild-weather glove.
- Hipora¹ waterproof, windproof and breathable glove insert.
- Shaped fingers.
- Velcro adjustment for easy sleeve fit.
- Suede at back thumb for lens wipe.
- Conductive leather at index.

**Performance:**

Waterproofness | Dextirity | Warmth

### GRIP GLOVES

**446323** • S, M, L, XL, 2XL, 3XL

Black (**90**)



**Description and terrain:**
- High-performance insulated glove with great grip feel.
- Use for trail and Deep snow riding.

**Features and technologies:**
- 100 g PrimaLoft® Gold to top hand.
- Waterproof, windproof and breathable glove insert.
- Inside adhesive technology for a better grip control, added tactility and dexterity.
- Light insulation at back hand only (85 g Primaloft Gold), for warmth without compromising grip.
- Print design on back hand to minimize snow accumulation.
- Rubber finger print for improved grip.
- Fully shaped fingers.
- Boxed fingertips to avoid air infiltration.
- Neoprene wrist with adjustment.
- Padded and reinforced palm.
- Leather palm construction for toughness.
- Suede at back thumb for lens wipe.
- Conductive leather at index.

**Performance:**

Waterproofness | Dextirity | Warmth

### NEW BC ASPECT SHORT GLOVES

**446354** • S, M, L, XL, 2XL, 3XL

Black (**90**)



**Description and terrain:**
- Breathable glove with some insulation perfect for moderate temperatures.
- Use in Deep snow riding.

**Features and technologies:**
- Pittards goat leather - resistant to the elements, stain resistant and durable leather.
- Sympatex fabric 2L.
- Light insulation at back hand (60 g Primaloft Gold) and grip taped insulation at palm, for warmth without compromising grip (60 g Primaloft Grip Control).
- Wateproof and windproof membrane.
- Xstatic mesh lined for antibacterial and stay dry moisture managment.
- Wrist strap adjustment with velcro to fit under a sleeve.
- Extra grip leather at palm and thumb.
- Shaped and articulated fingers for maximum grip control.
- Conductive leather at index for touchscreen.
- Wiper on left index + suede at back thumb for lens wipe.

**Performance:**

Waterproofness | Dextirity | Warmth



MEN'S

### NEW BC ASPECT LONG GLOVES

**446352** • S, M, L, XL, 2XL, 3XL

Black (**90**)



**Description and terrain:**
- Breathable glove with some insulation perfect for moderate temperatures.
- Use in Deep snow riding.

**Features and technologies:**
- Pittards goat leather - resistant to the elements, stain resistant and durable leather.
- Sympatex fabric 2L.
- Light insulation at back hand (60 g Primaloft Gold) and grip taped insulation at palm, for warmth without compromising grip (60 g Primaloft Grip Control).
- Wateproof and windproof membrane.
- Xstatic mesh lined for antibacterial and stay dry moisture managment.
- Wide and long cuff with elastic cord adjustment and puller at hem to fit over the sleeve.
- Inside adhesive technology for a better grip control.
- Shaped and articulated fingers for maximum grip control.
- Conductive leather at index for touchscreen.
- Wiper on left index + suede at back thumb for lens wipe.

**Performance:**

Waterproofness | Dextirity | Warmth

# RIDING GEAR TRAIL

## JACKETS

MEN'S

### NEW VASA JACKET

**440934** • S, M, MT, L, LT, XL, XLT, 2XL, 3XL

Black (**90**), Green (**70**), Indigo Blue (**82**), Khaki (**05**)



**Description and terrain:**
- New style featuring the Exofloat System.
- Use on trails.

**Features and technologies:**
- Critical seams and logos sealed.
- 200 g insulation + 60g Exo Float technology.
- Fabric performance 5,000 mm/5,000 g.
- Polar fleece at front body and top arms.
- Reflective details on back and sleeves for maximum visibility.
- E LinQ system.
- Underarm vents.
- Inner cuff.
- Brushed knit inside collar.
- Adjustable bottom hem and sleeve cuffs.
- Mesh at hem and as sleeves for water drainage.
- 2 handpockets.
- YKK zippers throughout.
- Inside cell phone pocket.
- D-ring.

**Performance:**

Waterproofness | Breathability | Warmth

**Key benefits:**

Stay Afloat | Great value | Reflective

LADIES'

### NEW LADIE'S VASA JACKET

**440944** • XS, S, M, L, XL, 2XL, 3XL

Black (**90**), Burgundy (**35**), Dark Navy (**16**)



**Description and terrain:**
- New style featuring the Exofloat System.
- Use on trails.

**Features and technologies:**
- Critical seams and logos sealed.
- 200 g insulation + 60g Exo Float technology.
- Fabric performance 5,000 mm/5,000 g.
- Polar fleece at front body and top arms.
- Reflective details on back and sleeves for maximum visibility.
- E LinQ system.
- Underarm vents.
- Inner cuff.
- Brushed knit inside collar.
- Adjustable bottom hem and sleeve cuffs.
- Mesh at hem and as sleeves for water drainage.
- 2 handpockets.
- YKK zippers throughout.
- Inside cell phone pocket.
- D-ring.

**Performance:**

Waterproofness | Breathability | Warmth

**Key benefits:**

Stay Afloat | Great value | Reflective

# JACKETS

MEN'S

## X-TEAM JACKET

**440937** • XS, S, M, MT, L, LT, XL, XLT, 2XL
**442453** • 2XLT, 3XL, 3XLT, 4XL, 5XL

Black (**90**), Charcoal Grey (**07**), Dark Navy (**16**), Heather Charcoal (**29**), Indigo Blue (**82**)



**Description and terrain:**
- Warm jacket with a racing look.
- Use on active trails.

**Features and technologies:**
- 100% waterproof, breathable and windproof.
- 200 g of PrimaLoft® Black insulation.
- Fabric performance 10,000 mm/5,000 g.
- 100% seams and logos sealed.
- Radiant Core technology to keep warm.
- Additionnal removable collar to seal air entry.
- 2 handpockets, 1 napoleon pocket with chamois and 1 inner mesh pocket.
- 360° reflective details for maximum visibility.
- Polar fleece at front body and top arms for added warmth.
- Double center front flap insulated for heat retention and wind protection.
- 200 g of Primaloft Black insulation.
- E LinQ system wire cable.
- Powder skirt.
- Underarm vent.
- Shaped sleeves.
- Adjustable cuffs with thumb hole gaiter.
- YKK zippers throughout and YKK AquaGuard at hand pockets.
- Inside cell phone pocket.
- Laser-cut wrist gaiter.

**Performance:**
Waterproofness: ++ | Breathability: + | Warmth: +

**Key benefits:**
Windproof: ++ | Reflective: + | Fleece lined: +

## LADIES' X-TEAM JACKET

**440945** • XS, S, M, L, XL, 2XL, 3XL

Black (**90**), Dark Navy (**16**), Deep Purple (**42**), Heather Charcoal (**29**)



**Description and terrain:**
- Warm jacket with a racing look.
- Use on trails.

**Features and technologies:**
- 100% waterproof, breathable and windproof.
- 200 g of PrimaLoft® Black insulation.
- Fabric performance 10,000 mm/5,000 g.
- Seams and logos 100% sealed.
- Radiant Core technology to keep warm.
- Additionnal removable collar to seal air entry.
- 2 handpockets, 1 napoleon pocket with chamois and 1 inner mesh pocket.
- 360° reflective details for maximum visibility.
- Polar fleece at front body and top arms for added warmth.
- Double center front flap insulated for heat retention and wind protection.
- E LinQ system wire cable.
- Powder skirt.
- Shaped sleeves.
- Adjustable cuffs.
- Laser-cut wrist gaiter.
- YKK zippers throughout and YKK AquaGuard at hand pockets.
- 2-way zipper at center front.
- Inside cell phone pocket.
- Underarm vent.

**Performance:**
Waterproofness: + | Breathability: + | Warmth: +

**Key benefits:**
Windproof: ++ | Reflective: + | Fleece lined: +

LADIES'

MEN'S

## RACING JACKET

**440933** • XS, S, M, L, XL, 2XL, 3XL

Orange (**12**)



**Description and terrain:**
- Racing look shell.

**Features and technologies:**
- Softshell-like fabric with windproof, water repellent and breathability properties.
- 2 large pockets at front.
- Watertight YKK zippers throughout.
- Room at upper back for identification.
- 2 front and 1 rear zippered vent.
- Longer back hem.
- Adjustable hem and sleeve hem.
- D-ring.

## WARM-UP COAT

**440957** • One size

Black (**90**)



**Description and terrain:**
- Warm coat to wear over.
- Use by the racing team members.

**Features and technologies:**
- Critical seams and logos sealed.
- Fabric performance 10,000 mm/5,000 g.
- Insulated pre-race overcoat.
- 200 g insulation.
- Hood fits over a Ski-Doo snocross helmet.
- Large handwearmer pockets with fleece lining.

MEN'S

## ABSOLUTE O TEAM EDITION JACKET

**440939** • S, M, L, XL, 2XL, 3XL

Black with Graphics (**94**)



**Description and terrain:**
- Warmest jacket in our collection.
- Use on trails.

**Features and technologies:**
- 100% windproof, waterproof and highly breathable membrane.
- 200 g of PrimaLoft® Gold insulation plus a removable inner liner with 100 g of PrimaLoft® Gold.
- 2 ply Sympatex membrane technology with lifetime warranty.
- 100% seams and logos sealed.
- Radiant Core technology to keep warm.
- Reflective details for optimized visibility.
- Removable hood with clip system.
- Removable and adjustable collar to seal air entry.
- Quadruple center front flaps insulated for heat retention and wind protection.
- E LinQ system.
- Underarm vents.
- 2 handpockets, 1 napoleon pocket with chamois and 1 inner mesh pocket.
- Inside cell phone pocket.
- D-ring.
- YKK zippers.

**Performance:**
Waterproofness: + | Breathability: + | Warmth: +

**Key benefits:**
Element proof: + | Max warmth: + | High airflow: +

## ABSOLUTE O JACKET

**440938** • S, M, L, XL, 2XL, 3XL

Black (**90**), Denim Blue (**79**), Khaki (**05**)



**Description and terrain:**
- Warmest jacket in our collection.
- Use on trails.

**Features and technologies:**
- 100% windproof, waterproof and highly breathable membrane.
- 200 g of PrimaLoft® Gold insulation plus a removable inner liner with 100 g of PrimaLoft® Gold.
- 2 ply Sympatex membrane technology with lifetime warranty.
- 100% seams and logos sealed.
- Radiant Core technology to keep warm.
- Reflective details for optimized visibility.
- Removable hood with clip system.
- Removable and adjustable collar to seal air entry.
- Quadruple center front flaps insulated for heat retention and wind protection.
- E LinQ system.
- Underarm vents.
- 2 handpockets, 1 napoleon pocket with chamois and 1 inner mesh pocket.
- Inside cell phone pocket.
- D-ring.
- YKK zippers.

**Performance:**
Waterproofness: + | Breathability: + | Warmth: +

**Key benefits:**
Element proof: + | Max warmth: + | High airflow: +

## LADIES' ABSOLUTE O TEAM EDITION JACKET

**440950** • XS, S, M, L, XL, 2XL, 3XL

Black with Graphics (**94**)



**Description and terrain:**
- Warmest jacket in our collection.
- Use on trails.

**Features and technologies:**
- 100% windproof, waterproof and highly breathable membrane.
- 200 g of PrimaLoft® Gold insulation plus a removable inner liner with 100 g of PrimaLoft® Gold.
- 2 ply Sympatex membrane technology with lifetime warranty.
- 100% seams and logos sealed.
- Radiant Core technology to keep warm.
- Reflective details for optimized visibility.
- Removable hood with clip system.
- Removable and adjustable collar to seal air entry.
- Quadruple center front flaps insulated for heat retention and wind protection.
- E LinQ system.
- Underarm vents.
- 2 handpockets, 1 napoleon pocket with chamois and 1 inner mesh pocket.
- Inside cell phone pocket.
- D-ring.
- YKK zippers.

**Performance:**
Waterproofness: + | Breathability: + | Warmth: +

**Key benefits:**
Element proof: + | Max warmth: + | High airflow: +

LADIES'

## LADIES' ABSOLUTE O JACKET

**440946** • XS, S, M, L, XL, 2XL, 3XL

Black (**90**), Brick Red (**33**), Denim Blue (**79**)



**Description and terrain:**
- Warmest jacket in our collection.
- Use on trails.

**Features and technologies:**
- 100% windproof, waterproof and highly breathable membrane.
- 200 g of PrimaLoft® Gold insulation plus a removable inner liner with 100 g of PrimaLoft® Gold.
- 2 ply Sympatex membrane technology with lifetime warranty.
- 100% seams and logos sealed.
- Radiant Core technology to keep warm.
- Reflective details for optimized visibility.
- Removable hood with clip system.
- Removable and adjustable collar to seal air entry.
- Quadruple center front flaps insulated for heat retention and wind protection.
- E LinQ system.
- Underarm vents.
- 2 handpockets, 1 napoleon pocket with chamois and 1 inner mesh pocket.
- Inside cell phone pocket.
- D-ring.
- YKK zippers.

**Performance:**
Waterproofness: + | Breathability: + | Warmth: +

**Key benefits:**
Element proof: + | Max warmth: + | High airflow: +

## JACKETS

MEN'S

### LEGACY JACKET

**440935** • S, M, L, XL, 2XL, 3XL

Black (**90**), Brick Red (**33**)



**Description and terrain:**
- Warm jacket with a heritage look.
- Use on trails.

**Features and technologies:**
- 200 g of PrimaLoft® Black insulation plus a removable inner liner with 100 g of PrimaLoft® Silver.
- 100% seams and logos sealed.
- Fabric performance 10,000 mm/5,000 g.
- Radiant Core technology to keep you warm.
- Additionnal removable collar to seal air entry.
- Reflective details.
- Triple center front insulated flaps for heat retention and wind protection.
- 2-way front zipper to improve confort in sitting position.
- E LinQ system.
- Powder skirt.
- YKK zippers throughout.
- Underarm vent.
- 2 handpockets, 1 chest pocket and 1 napoleon pocket with chamois.
- Inside cell phone pocket.
- Articulated sleeves.
- Adjustable cuffs
- Laser-cut wrist gaiter.
- D-ring.

**Performance:**

Waterproofness | Breathability | Warmth

**Key benefits:**

Reflective | Removable lining | Vintage style

LADIES'

### NEW LADIES' LEGACY JACKET

**440960** • XS, S, M, L, XL, 2XL, 3XL

Black (**90**), Dark Navy (**16**)



**Description and terrain:**
- Warm jacket with a heritage look.
- Use on trails.

**Features and technologies:**
- 200 g of PrimaLoft® Black insulation plus a removable inner liner with 100 g of PrimaLoft® Silver.
- 100% seams and logos sealed.
- Fabric performance 10,000 mm/5,000 g.
- Radiant Core technology to keep you warm.
- Additionnal removable collar to seal air entry.
- Reflective details.
- Triple center front insulated flaps for heat retention and wind protection.
- 2-way front zipper to improve confort in sitting position.
- E LinQ system.
- Powder skirt.
- YKK zippers throughout.
- Underarm vent.
- 2 handpockets, 1 chest pocket and 1 napoleon pocket with chamois.
- Inside cell phone pocket.
- Articulated sleeves.
- Adjustable cuffs.
- Laser-cut wrist gaiter.
- D-ring.

**Performance:**

Waterproofness | Breathability | Warmth

**Key benefits:**

Reflective | Removable lining | Vintage style

## HIGHPANTS

MEN'S

### NEW VASA HIGHPANTS

**441674** • XS, S, M, L, XL, 2XL, 3XL

Black (**90**), Dark Navy (**16**)



**Description and terrain:**
- New style featuring the Exofloat System.
- Use on trails.

**Features and technologies:**
- 200 g of thermal Loft insulation.
- 2-way ¾ length side zippers with flap.
- Fabric performance 5,000 mm/5,000 g.
- Critical seam sealed and logos sealed.
- Articulated knees.
- Reinforcement at seat and inner leg.
- Storm gaiters with boot snap connector.
- ExoFloat System, floating technology.
- 2-way zipper at side leg.
- Zipped handpockets.
- Velcro closure at fly.
- Elastic waist at back.
- Mesh at bottom hem to quickly drain out water weight.
- Adjustable suspenders.

**Performance:**

Waterproofness | Breathability | Warmth

**Key benefits:**

Stay afloat | Great value | Reinforced

LADIES'

### NEW LADIES' VASA HIGHPANTS

**441683** • XS, S, M, L, XL, 2XL, 3XL

Black (**90**), Dark Navy (**16**)



**Description and terrain:**
- New style featuring the Exofloat System.
- Use on trails.

**Features and technologies:**
- 200 g of thermal Loft insulation.
- 2-way ¾ length side zippers with flap.
- Fabric performance 5,000 mm/5,000 g.
- Critical seam sealed and logos sealed.
- Pre-shaped knees.
- Reinforcement at seat and inner leg.
- Storm gaiters with boot snap connector.
- 5K/5K coating.
- ExoFloat System, floating technology.
- 2-way zipper at side leg.
- Zipped handpockets.
- Velcro closure at fly.
- Elastic waist at back.
- Mesh at bottom hem to quickly drain out water weight.
- Adjustable suspenders.

**Performance:**

Waterproofness | Breathability | Warmth

**Key benefits:**

Stay Afloat | Great value | Reinforced

MEN'S

### X-TEAM HIGHPANTS

**441676** • XS, SS, S, MS, M, LS, L, XLS, XL, 2XL

**442452** • MT, LT, XLT, 2XLT, 3XL, 3XLT, 4XL, 4XLT, 5XL

Black (**90**), Dark Navy (**16**)

Black (**90**)



**Description and terrain:**
- Warm Highpants.
- Use on active trails.

**Features and technologies:**
- Highly windproof, waterproof and breathable.
- 100% seams and logos sealed.
- Fabric performance 5,000 mm/5,000 g.
- Polar fleece-lined at seat.
- 200 g of PrimaLoft® Black insulation.
- Articulated, preshaped and padded knees.
- Adjustable waist.
- 2-way full-length waterproof zippers.
- Hand pockets with zipper.
- Reinforced seat, knees and inner legs.
- Storm gaiters.

**Performance:**

Waterproofness | Breathability | Warmth

**Key benefits:**

++ Windproof | Built-in protection | Warm seat

LADIES'

### LADIES' X-TEAM HIGHPANTS

**441679** • XS, SS, S, MS, M, LS, L, XLS, XL, 2XL, 3XL

Black (**90**), Dark Navy (**16**)



**Description and terrain:**
- Warm Highpants.
- Use on active trails.

**Features and technologies:**
- Highly windproof, awterproof and breathable.
- 100% seams and logos sealed.
- Fabric performance 10,000 mm/5,000 g.
- Polar fleece-lined at seat.
- 200 g of PrimaLoft® Black insulation.
- Articulated, preshaped and padded knees.
- Adjustable waist.
- 2-way full-length waterproof zippers.
- Hand pockets with zipper.
- Reinforced seat, knees and inner legs.
- Storm gaiters.
- Integrated drop seat.

**Performance:**

Waterproofness | Breathability | Warmth

**Key benefits:**

++ Windproof | Built-in protection | Drop seat

MEN'S

### SKI-DOO RACING PANTS

**441673** • XS, S, M, L, XL, 2XL, 3XL

Orange (**12**)



**Description and terrain:**
- Racing look shell.

**Features and technologies:**
- Water-repellent, windproof, flexible and optimally breathable fabric.
- Reinforcement fabric at in-seam and high wear areas.
- Higher back and lower front shape for optimal comfort.
- Pre-shaped knees.
- Extra grip stripes added to seating area.
- D-rings at crotch and at waist.

### ABSOLUTE 0 HIGHPANTS

**441677** • SS, S, MS, M, LS, L, XLS, XL, 2XL, 3XL

Black (**90**), Dark Navy (**16**)



**Description and terrain:**
- Warmest Highpants in our lineup.
- Use on trails.

**Features and technologies:**
- 2 ply Sympatex membrane technology with lifetime warranty.
- 200 g of PrimaLoft® Gold insulation.
- 100% seams and logos sealed.
- Polar fleece at seat and crotch for added warmth.
- Stretch knit material on sides for additional flexibility.
- Pre-shaped and padded knees.
- Adjustable waist.
- Bib pocket and 2 hand pockets with brushed knit fabric inside.
- Storm gaiters.

**Performance:**

Waterproofness | Breathability | Warmth

**Key benefits:**

Element proof | Max warmth | Built-in protection

## HIGHPANTS

LADIES'

### LADIES' ABSOLUTE 0 HIGHPANTS

**441680** • XS, SS, S, MS, M, LS, L, XLS, XL, 2XL, 3XL

Black (**90**)



**Description and terrain:**
- Warmest Highpants in our lineup.
- Use on trails.

**Features and technologies:**
- 2 ply Sympatex membrane technology with lifetime warranty.
- 200 g of PrimaLoft® Gold insulation.
- 100% seams and logos sealed.
- Polar fleece at seat and crotch for added warmth.
- Preshaped and padded knees.
- Adjustable waist.
- Bib pocket and 2 hand pockets with brushed knit fabric inside.
- Storm gaiters.

**Performance:** Waterproofness, Breathability, Warmth

**Key benefits:** Element proof, Max warmth, Built-in protection

MEN'S

### VOYAGER HIGHPANTS

**441675** • S, M, L, XL, 2XL, 3XL

Black (**90**), Dark Navy (**16**)



**Description and terrain:**
- Use on trails.

**Features and technologies:**
- Highly windproof, waterproof and breathable.
- 100% seams and logos sealed.
- Fabric performance 10,000 mm/5,000 g.
- Preshaped and padded knees.
- Polar fleece at seat and crotch for extra warmth.
- 2-way zipper with double flaps at legs.
- 200 g of PrimaLoft® Silver insulation.
- Elastic at back.
- Storm gaiter.
- Reinforcement at inner legs, seat and knees for abrasion resistance.
- Zippered thigh pocket & chest pocket.

**Performance:** Waterproofness, Breathability, Warmth

**Key benefits:** Windproof, Built-in protection, Warm seat

LADIES'

### LADIE'S VOYAGER HIGHPANTS

**441681** • XS, S, M, L, XL, 2XL, 3XL

Black (**90**), Grey (**09**)



**Description and terrain:**
- Use on trails.

**Features and technologies:**
- Highly windproof, waterproof and breathable.
- 100% seams and logos sealed.
- Fabric performance 10,000 mm/5,000 g.
- Preshaped and padded knees.
- Polar fleece at seat and crotch for extra warmth.
- 2-way zipper with double flaps at legs.
- 200 g of PrimaLoft® Silver insulation.
- Elastic at back.
- Storm gaiter.
- Reinforcement at inner legs, seat and knees for abrasion resistance.
- Zippered thigh pocket & chest pocket.
- Integrated drop seat.

**Performance:** Waterproofness, Breathability, Warmth

**Key benefits:** Windproof, Built-in protection, Warm seat

## HANDWEAR

MEN'S

### X-TEAM CREW GLOVES

**446297** • S, M, L, XL, 2XL, 3XL

Black (**90**)



**Description and terrain:**
- Soft, durable, flexible and breathable gloves.
- Use for trail and Deep snow riding.

**Features and technologies:**
- Stretch wrist for easy in and out.

**Performance:** Waterproofness, Dextirity, Warmth Non insulated

### X-TEAM NYLON GLOVES

**446351** • XS, S, M, L, XL, 2XL, 3XL

Black (**90**), Charcoal Grey (**07**)



**Description and terrain:**
- Insulated and breathable glove, perfect for active rides.
- Use for trail and Deep snow riding.

**Features and technologies:**
- Top hand: 200 g PrimaLoft® Gold
- Palm: 133 g PrimaLoft® grip control.
- Waterproof, windproof and breathable glove insert.
- Naturally moisture-wicking and antimicrobial wool blend lining.
- Boxed fingertips to avoid air infiltration.
- Grip control technology for a better grip in palm.
- Touch screen index finger.
- Visor wiper.

**Performance:** Waterproofness, Dextirity, Warmth



MEN'S

### X-TEAM LEATHER GLOVES

**446356** • S, M, L, XL, 2XL, 3XL

Black (**90**), Charcoal Grey (**07**), Khaki (**05**)



**Description and terrain:**
- Rugged, proven leather construction in a warm insulated glove.
- Use for trail and Deep snow riding.

**Features and technologies:**
- Top hand: 200 g PrimaLoft® Gold Palm: 133 g PrimaLoft® grip control.
- Waterproof, windproof and breathable glove insert.
- Naturally moisture-wicking and antimicrobial wool blend lining.
- Boxed fingertips to avoid air infiltration.
- Grip control technology for a better grip in palm.
- Touch screen index finger.
- Visor wiper.

**Performance:** Waterproofness, Dextirity, Warmth

### ABSOLUTE 0 GLOVES

**446317** • XS, S, M, L, XL, 2XL, 3XL

Black (**90**)



**Description and terrain:**
- Warmest glove in our lineup.
- Use on trails.

**Features and technologies:**
- Top hand: 200 g PrimaLoft® Gold and goose down Palm: 133 g PrimaLoft® grip control.
- Ethical goose down insulation.
- Waterproof, windproof and breathable glove insert.
- Naturally moisture-wicking and antimicrobial wool blend lining.
- Boxed fingertips to avoid air infiltration.
- Leather palm and fingers with grip reinforcement.
- Touch screen index finger.
- Nose wipe on thumb.

**Performance:** Waterproofness, Dextirity, Warmth

### ABSOLUTE 0 MITTS

**446318** • XS, S, M, L, XL, 2XL

Black (**90**)



**Description and terrain:**
- Warmest mitts in our lineup.
- Use on trails.

**Features and technologies:**
- Top hand: 200 g PrimaLoft® Gold and goose down Palm: 133 g PrimaLoft® grip control.
- Ethical goose down insulation.
- Waterproof, windproof and breathable glove insert.
- Naturally moisture-wicking and antimicrobial wool blend lining.
- Leather palm et fingers with grip reinforcement.
- Touch screen index finger.
- Nose wipe on thumb.

**Performance:** Waterproofness, Dextirity, Warmth

## HEADWEAR

UNISEX

### NEW PYRA BALACLAVA

**448735** • One size

Black (**90**)



**Description and terrain:**
- Balaclava with a neoprene face guard for effective moisture exchange to promote breathing in extreme cold.
- Perfect when used with PYRA helmet.
- Use on trails.

**Features and technologies:**
- 65% nylon, 20% polyester, 10% spandex, 5% synthetic.
- Stretch, quick-dry fabric with brushed inner surface.
- Flatlocked seams prevent skin chafing.
- Perfect to use with open face helmets.
- Centered heat transfere PYRA logo.
- Mouth guard deflects moisture down and away from goggles.
- Windbreaker fabric around forehead, eyes and neck.

### ULTIMATE TRAIL BALACLAVA

**447736** • S/M, L/XL

Black (**90**)



**Description and terrain:**
- Ultimate balaclava that provides warm, breathability and winproofness.
- Perfect when used with the OXYGEN, EXOME and PYRA helmets.
- Use on trails.

**Features and technologies:**
- 60% polyester, 30% nylon, 10% spandex.
- Waterproof, windproof and breathable fabric at neck.
- Moisture-wicking fabric.
- Elastic channel at sides for contoured fit.

### ACTIVE BALACLAVA SUBLIMATED

**448745** • One size

Brick Red (**33**), Deep Purple (**42**), Hi-Vis Yellow (**26**)



**Description and terrain:**
- Balaclava warm and breathable.
- Use for Deep snow riding.

**Features and technologies:**
- 91% polyester, 9% spandex.
- Stretch, antibacterial fabric with brushed inner surface.
- Moisture-wicking anti-odor treatment.
- Flatlocked seams prevent skin chafing.

## HEADWEAR

UNISEX

**NEW COMBO BALACLAVA** | **448743** • One size | Black (**90**)



**Description and terrain:**
- Warm and breathable balaclava that protects head and neck.
- Use for Deep snow riding.

**Features and technologies:**
- 100% polyester.
- 2 pieces construction that allows a better fit.
- Top piece allows a better breathability.
- Bottom piece allows a good protection against the cold.
- Stretch, antibacterial warming fleece fabric with brushed inner surface.
- Flatlocked seams prevent skin chafing.
- Ski-Doo screen print.

MEN'S

**NEW ACTIVE BALACLAVA SOLID** | **448729** • One size | Black (**90**)



**Description and terrain:**
- Balaclava that provides warmth and breathability.
- Use on trails.

**Features and technologies:**
- 91% polyester, 9% spandex.
- Stretch, antibacterial fabric with brushed inner surface.
- Moisture-wicking anti-odor treatment.
- Flatlocked seams prevent skin chafing.
- Non-branded.

UNISEX

**ACTIVE TUBE** | **454580** • One size | Black (**90**), Brick Red (**33**), White (**01**)



**Description and terrain:**
- Multi-purpose tube to keep warm.
- Use for trail and Deep snow riding.

**Features and technologies:**
- 88% polyester, 12% spandex.
- Stretch and comfortable fabric.
- 12 different configurations: bandana, headband, balaclava and more.

## TECHNICAL WEAR

UNISEX

**NECK GAITOR** | **447841** • One size | Black (**90**)



**Description and terrain:**
- Neck gaitor to protect against the cold.

**Features and technologies:**
- 100% polyester.
- Spandex binding and elastic at back for a better fit.
- Anti-pilling fleece.

## RIDING ACCESSORIES

MEN'S

**MAGNETIC FACE SHIELD** | **447819** • One size | Black (**90**), Hi-Vis Yellow (**26**)



**Description and terrain:**
- Face shield inspired by deep-snow riders.
- Use for trail and Deep snow riding.

**Features and technologies:**
- Magnetic attaches to helmet to protect exposed area under chin.
- Easily folds to store in pocket, or glove box without taking up valuable storage space.
- Compatible with XP-X & XC-4 helmet.

## BATTERY AND CHARGER

UNISEX

**1 BATTERY PACK FOR HEATED GEAR** | **488100** • One size | Black (**90**)



- 1X Lithium ion battery, 7,4V, 3,000mA.
- Rechargeable.

**BATTERY CHARGER FOR HEATED GEAR** *(Not illustrated)* | **488101** • One size | Black (**90**)

- Battery Charger with dual output.
- EU / US interchangable plugs.



# RIDING GEAR UTILITY

## JACKETS

MEN'S

**NEW EXPEDITION RADIANT JACKET** | **440982** • S, M, L, XL, 2XL, 3XL | Black (**90**)



**Description and terrain:**
- Warm utility jacket.
- Use to work around your snowmobile.

**Features and technologies:**
- 200 g of insulation.
- Fabric performance 10,000 mm/5,000 g.
- Under arm vents.
- 8 multi-purpose pockets.
- Detachable hood.
- Wide reflective webbing for maximum visibility.
- Practical carabiner.
- Powder skirt.
- Reinforced elbows and forearms.
- Adjustable collar and wrists.
- Critical seam sealed.
- E LinQ system.
- Clim8 heated technology.
- Includes 1 battery and a charger
- YKK zippers.

**Performance:** Waterproofness, Breathability, Warmth

**Key benefits:** Temperature regulation, Cuts Wind, Reinforced

**EXPEDITION JACKET** | **440964** • S, M, L, XL, 2XL, 3XL | Black (**90**), Khaki (**05**)



**Description and terrain:**
- Warm utility jacket.
- Use to work around your snowmobile.

**Features and technologies:**
- 200 g of EcoLoft insulation.
- Fabric performance 10,000 mm/5,000 g.
- Under arm vents.
- 8 multi-purpose pockets.
- Detachable hood.
- Wide reflective webbing for maximum visibility.
- Practical carabiner.
- Powder skirt.
- Reinforced elbows and forearms.
- Adjustable collar and wrists.
- Critical seam sealed.
- E LinQ system.
- YKK zippers.

**Performance:** Waterproofness, Breathability, Warmth

**Key benefits:** Cuts Wind, Reinforced, Reflective

## HIGHPANTS

MEN'S

**EXPEDITION HIGHPANTS** | **286814** • S, M, L, XL, 2XL, 3XL | Black (**90**), Khaki (**05**)



**Description and terrain:**
- Warm utility highpants.
- Use to work around your snowmobile.

**Features and technologies:**
- 90% nylon, 10% polyester.
- 200 g of EcoLoft insulation.
- Fabric performance 10,000 mm/5,000 g.
- Water resistant Teflon coating.
- Wide reflective webbing for maximum visibility.
- Reinforced seat and inner legs.
- Fleece-lined seat.
- Storm gaiters.
- 2 wide cargo pockets and 1 chest pocket.
- Suspenders with loop adjustment.
- Pre-shaped padded knees.
- Velcro closure at fly.

**Performance:** Waterproofness, Breathability, Warmth

**Key benefits:** Cuts Wind, Reinforced, Reflective

## HANDWEAR

UNISEX

**NEW EXPEDITION RADIANT GLOVES** | **446346** • XS, S, M, L, XL, 2XL, 3XL | Black (**90**)



**Description and terrain:**
- Extra warm gloves for comfort in all riding conditions.
- Use for trail and Deep snow riding.

**Features and technologies:**
- Top hand: 200 g PrimaLoft® Gold Palm: 133 g PrimaLoft® Gold.
- Waterproof, windproof and breathable glove insert.
- Moisture-wicking fleece lining.
- Leather palm and fingers with grip reinforcement.
- Touch screen index finger.
- Nose wipe on thumb.
- Clim8 heated technology.
- Includes 2 batteries and a charger.

**Performance:** Waterproofness, Dextirity, Warmth

## HANDWEAR

MEN'S

**EXPEDITION GLOVES** | **446337** • XS, S, M, L, XL, 2XL, 3XL | Black (**90**), Khaki (**05**)



**Description and terrain:**
- Extra warm gloves for comfort in all riding conditions.
- Use for trail and Deep snow riding.

**Features and technologies:**
- Top hand: 200 g PrimaLoft® Gold Palm: 133 g PrimaLoft® Gold.
- Waterproof, windproof and breathable glove insert.
- Naturally moisture-wicking and antimicrobial wool blend lining.
- Leather palm and fingers with grip reinforcement.
- Touch screen index finger.
- Nose wipe on thumb.

**Performance:**




# BOOTS AND SOCKS

## FOOTWEAR

MEN'S

**TEC+ REC BOOTS** | **444240** • 5, 6, 7, 8, 9, 10, 11, 12, 13 | Black (**90**)



**Description:**
- Tec + Rec Boots with tough abrasion resistant-leather outer.

**Features and technologies:**
- Breathable waterproof membrane.
- Limit of comfort temperature range: -40°F to -58°F or -40°C to -50°C*.
- Rugged ultra-grip outsole design.
- Removable/inner liner.

LADIES'

**LADIES' TEC+ REC BOOTS** | **444241** • 6, 7, 8, 9, 10 | Black (**90**)



**Description:**
- Ladies' Tec + Rec boots with tough abrasion-resistant leather outer.

**Features and technologies:**
- Breathable waterproof membrane.
- Limit of comfort temperature range: -40°F to -58°F or -40°C to -50°C*.
- Rugged ultra-grip outsole design.
- Removable/inner liner.

UNISEX

**TEC+ BOOTS** | **444253** • 5, 6, 7, 8, 9, 10, 11, 12, 13 | Black (**90**)



**Description:**
- Tec + Boots with moisture-wicking inner liner material.

**Features and technologies:**
- Improved comfort and flex.
- Removable insole.
- Unisex, smaller sizes added for ladies.
- Kevlar-reinforced laces.
- 600 g PrimaLoft ECO FOOTWEAR insulation for maximum comfort.
- Leather outer layer incorporates HydroGuard† waterproof membrane.
- Tapered rear shape for better achilles and ankle support.
- Abrasion- and impact-resistant ice breaker toe piece.
- Aggressive, durable anti-slip outsole for running board traction.

## SOCKS

UNISEX

**ACTIVE LIGHTWEIGHT SOCKS** | **444254** • S, M, L | Brick Red (**33**), Hi-Vis Yellow (**26**), Indigo Blue (**82**)



**Description:**
- Active lightweight socks perfect to keep the warmth.

**Features and technologies:**
- Ventilation channels for a maximal breathability.
- Reinforced toe and heel in Primaloft and wool.
- Elastic fabric for comfort.

**THERMAL HEAVYWEIGHT SOCKS** | **444255** • S, M, L | Charcoal Grey (**07**), Dark Navy (**16**)



**Description:**
- Warmest sock of our lineup.

**Features and technologies:**
- Elastic fabric to ensure comfort.
- Ventilation channels for a maximal breathability.
- Thick fabric to keep the warmth.



UNISEX

**NEW PERFORMANCE MIDWEIGHT SOCKS** | **454597** • S, M, L | Brick Red (**33**), Hi-Vis Yellow (**26**), Raspberry (**39**)



**Description:**
- Performance sock with X-Team flavour.

**Features and technologies:**
- Elastic fabric to ensure comfort.
- Reinforcement in wool for durability.
- Ski-Doo and X logos.

# TEKVEST

UNISEX

**SKI-DOO TRAILMASTER TEKVEST** | **469308** • XS, S, M, L, XL / **469309** • 2XL, 3XL | Grey (**09**)



**Description:**
- Ski-Doo TrailMaster TekVest.

**Features and technologies:**
- Zip-up fleece collar.
- 2 body-heated pockets are roomy enough to hold up to 4 smart phones/battery boosters in a vertical position. A perfect spot for a small wallet, a trail map or special medication.
- Insulated on the outside with a reflective aluminium layer.
- Quick attach points included for optional shoulder pads.

# BAGS

UNISEX

**SKI-DOO STAND-UP ROLLER GEAR BAG** | **469319** • One size | Black (**90**)



**Description:**
- Ski-Doo Stand-Up Roller Gear Bag with heavy-duty polyester material.

**Features and technologies:**
- Structural skeleton ensures stand-up stability when loaded or unloaded.
- Waterproof cover included for extra protection against the elements.
- Compartmentalized design places helmets, goggles, boots and your gear in dedicated zones.
- Heavy duty 900D polyester material.
- 140-liter capacity.
- Dimensions: 85 cm x 47 cm x 40 cm

**SKI-DOO GEAR BAG 90 L** | **469321** • One size | Black (**90**)



**Description:**
- Ski-Doo Gear Bag 90L.

**Features and technologies:**
- Large main compartment with easy access to all gear.
- Large separated boot pocket.
- Zippered accessory pocket.
- Easy grab handles for transport.
- Detachable shoulder strap.
- Heavy-duty reinforced base.
- 900 D polyester.
- 90-liter capacity.
- Dimensions: 75 cm x 40 cm x 40 cm.

**SKI-DOO DUFFLE BACKPACK** | **469322** • One size | Black (**90**)



**Description:**
- Ski-Doo Duffle Backpack.

**Features and technologies:**
- Duffle bag with shoulder strap, can transform into a backpack.
- Adjustable shoulder and chest straps.
- Bottle holder.
- Foam padding on straps for comfort.
- 900 D polyester.
- 45-liter capacity.
- Dimensions: 65 cm x 28 cm x 30 cm.

**SKI-DOO LAPTOP BACKPACK** | **469323** • One size | Black (**90**)



**Description:**
- Ski-Doo Laptop Backpack.

**Features and technologies:**
- Laptop/tablet pocket holds up to 15" laptop.
- Fleece lined sunglasses pocket.
- Adjustable shoulder and chest straps.
- Organization pocket with key clip.
- Foam padding on straps and back for comfort.
- Carry-on slidder.
- Water bottle side pouch.
- 900 D polyester.

# BASE LAYERS

## UNDERWEAR

### UNISEX

**NEW ONE PIECE SUIT INSULATED LINER** | **454623** • XS, S, M, L, XL, 2XL, 3XL | Black (**90**)



**Description:**
- Under shell one-piece.
- Use for Deep snow riding.

**Features and technologies:**
- 100% polyester mesh.
- Insulation: 120 gsm.
- Moisture-wicking mesh lining.
- Chest pocket.
- Stretch gussets at shoulders and lower back for a better flexibility.
- Drop seat.

### MEN'S

**MERINO BLEND BASE LAYER (TOP)** | **454377** • S, M, L, XL, 2XL, 3XL | Black (**90**)



**Description:**
- Warm and breathable base layer.
- Use for Deep snow riding.

**Features and technologies:**
- 70% merino wool, 30% nylon.
- Permanent anti-odor performance.
- Moisture-wicking.
- Body temperature regulator.

**MERINO BLEND BASE LAYER (BOTTOM)** | **454378** • S, M, L, XL, 2XL, 3XL | Black (**90**)



**Description:**
- Warm and breathable base layer.
- Use for Deep snow riding.

**Features and technologies:**
- 70% merino wool, 30% nylon.
- Permanent anti-odor performance.
- Moisture-wicking.
- Body temperature regulator.
- Elastic waist band.

**THERMAL BASE LAYER (TOP)** | **454376** • S, M, L, XL, 2XL, 3XL | Black (**90**), Charcoal Grey (**07**)



**Description:**
- Warm base layer.
- Use on trails.

**Features and technologies:**
- 95% polyester, 5% spandex.
- Made of high-filament polyester enhanced by slight brushing to provide softness and warmth.
- Mesh paneled under arms for better ventilation and accelerated drying.
- Antimicrobial.

**THERMAL BASE LAYER (BOTTOM)** | **454374** • S, M, L, XL, 2XL, 3XL | Black (**90**)



**Description:**
- Warm base layer.
- Use on trails.

**Features and technologies:**
- 95% polyester, 5% spandex (brushed).
- Made of high-filament polyester enhanced by slight brushing to provide softness and warmth.
- Antimicrobial.

### LADIES'

**LADIES' MERINO BASE LAYER (TOP)** | **454379** • XS, S, M, L, XL, 2XL, 3XL | Black (**90**)



**Description:**
- Warm and breathable base layer.
- Use for Deep snow riding.

**Features and technologies:**
- 70% merino wool, 30% nylon.
- Permanent anti-odor performance.
- Moisture-wicking.
- Body temperature regulator.

**LADIES' MERINO BASE LAYER (BOTTOM)** | **454380** • XS, S, M, L, XL, 2XL, 3XL | Black (**90**)



**Description:**
- Warm and breathable base layer.
- Use for Deep snow riding.

**Features and technologies:**
- 70% merino wool, 30% nylon.
- Permanent anti-odor performance.
- Moisture-wicking.
- Body temperature regulator.
- Elastic waist band.



### LADIES'

**LADIES' THERMAL BASE LAYER (TOP)** | **454375** • XS, S, M, L, XL, 2XL, 3XL | Black (**90**), Charcoal Grey (**07**)



**Description:**
- Warm base layer.
- Use on trails.

**Features and technologies:**
- 95% polyester, 5% spandex.
- Made of high-filament polyester enhanced by slight brushing to provide softness and warmth.
- Mesh paneled under arms for better ventilation and accelerated drying.
- Antimicrobial.

**LADIES' THERMAL BASE LAYER (BOTTOM)** | **454373** • XS, S, M, L, XL, 2XL, 3XL | Black (**90**)



**Description:**
- Warm base layer.
- Use on trails.

**Features and technologies:**
- 95% polyester, 5% spandex.
- Made of high-filament polyester enhanced by slight brushing to provide softness and warmth.
- Antimicrobial.

# SPORTSWEAR PERFORMANCE

## FLEECE

### MEN'S

**X-TEAM MICRO-FLEECE** | **454579** • S, M, L, XL, 2XL, 3XL | Black (**90**), Heather Charcoal (**29**), Indigo Blue (**82**)



**Description:**
- Mid weight microfleece excellent for warmth as a second layer.

**Features and technologies:**
- 96% polyester, 4% spandex.
- Moisture-wicking fabric.
- Zippered hand pockets.

**SNO-X ZIP-UP FLEECE** | **454605** • S, M, L, XL, 2XL, 3XL | Black (**90**), Charcoal Grey (**07**), Green (**70**), Grey (**09**)



**Description:**
- Heavy weight fleece for maximum warmth.

**Features and technologies:**
- 96% polyester, 4% spandex.
- Adjusted fit.
- 2 side pockets.
- Thumb hole.

### LADIES'

**LADIES' X-TEAM MICRO-FLEECE** | **454601** • XS, S, M, L, XL, 2XL, 3XL | Black (**90**), Dark Navy (**16**), Heather Charcoal (**29**)



**Description:**
- Mid weight microfleece excellent for warmth as a second layer.

**Features and technologies:**
- 96% polyester, 4% spandex.
- Moisture-wicking fabric.
- Zippered hand pockets.
- Ski-Doo embossed binding at collar, cuff and hem.

**LADIES' SNO-X ZIP-UP** | **454603** • XS, S, M, L, XL, 2XL, 3XL | Black (**90**), Dark Navy (**16**), Deep Purple (**42**)



**Description:**
- Heavy weight fleece for maximum warmth.

**Features and technologies:**
- 96% polyester, 4% spandex.
- Adjusted fit.
- 2 side pockets.
- Thumb hole.

## JERSEYS

MEN'S

**NEW X-TEAM RACE JERSEY** | **454604** • S, M, L, XL, 2XL | Blue (**80**), White (**01**)



**Description:**
- Semi-fitted V-neck jersey.

**Features and technologies:**
- 100% polyester.
- Quick-dry fabric.
- Antibacterial, moisture-wicking fabric.
- Sublimated print.
- Rib at collar and cuffs.
- Underarm gussets for ease of movements.
- Jersey longer at back to easily enter it in riding pants.

LADIES'

**NEW LADIES' X-TEAM RACE JERSEY** | **454622** • S, M, L, XL, 2XL | Dark Navy (**16**), Deep Purple (**42**)



**Description:**
- Semi-fitted V-neck jersey.

**Features and technologies:**
- 100% polyester.
- Quick-dry fabric.
- Antibacterial, moisture-wicking fabric.
- Sublimated print.
- Rib at collar and cuffs.
- Underarm gussets for ease of movements.
- Jersey longer at back to easily enter it in riding pants.

## PIT SHIRTS

MEN'S

**MEN'S SKI-DOO PIT SHIRT** | **454576** • S, M, L, XL, 2XL, 3XL | Charcoal Grey (**07**)



**Description:**
- Ski-Doo Pit shirt perfect to wear when working around your snowmobile.

**Features and technologies:**
- 65% polyester, 32% cotton, 3% spandex.
- Teflon fabric protector; protects from stains.
- Chest pocket.
- Back pleats for ease of movement.
- Back loop to hang shirt.
- Ski-Doo logo on left chest.
- Sponsors logos on right chest.

## T-SHIRTS

MEN'S

**NEW PERFORMANCE LS TEE** | **454574** • S, M, L, XL, 2XL, 3XL | Black (**90**), Charcoal Grey (**07**)



**Description:**
- Durable long sleeves Performance T-Shirt.

**Features and technologies:**
- 86% coconut polyester, 16% spandex.
- Relaxed fit.
- Raglan sleeve.
- Moisture-wicking, to stay dry and comfortable.
- Naturally anti-odor.
- Antimicrobial.
- UV protection.
- Reflective heat transfer logo at center back.

**MEN'S X-TEAM T-SHIRT** | **454606** • S, M, L, XL, 2XL, 3XL | Black (**90**), Indigo Blue (**82**), Red (**30**)



**Description:**
- X-Team short sleeves T-Shirt.

**Features and technologies:**
- 100% cotton.
- X-team artwork at front.
- Crew neck.

LADIES'

**NEW LADIES' PERFORMANCE LS TEE** | **454602** • XS, S, M, L, XL, 2XL | Dark Navy (**16**), Raspberry (**39**)



**Description:**
- Durable long sleeves Performance T-Shirt.

**Features and technologies:**
- 86% coconut polyester, 16% spandex.
- Relaxed fit.
- Moisture-wicking, to stay dry and comfortable.
- Naturally anti-odor.
- Antimicrobial.
- UV protection.
- Reflective heat transfer logo at center back.



# SPORTSWEAR PREMIUM

## CASUALWEAR

MEN'S

**MEN'S SKI-DOO TURTLENECK** | **454381** • S, M, L, XL, 2XL, 3XL | Black (**90**), Heather Grey (**27**)



**Description:**
- Ski-Doo Turtleneck with stretch fabric.

**Features and technologies:**
- 90% polyester, 10% spandex.
- Moisture-wicking, anti-microbial treatment & anti-pilling.
- Ski-Doo embroidery logo on collar.

**SKI-DOO OVERSHIRT** | **454613** • S, M, L, XL, 2XL, 3XL | Beige (**02**), Dark Navy (**16**)



**Description:**
- Classic warm Overshirt.

**Features and technologies:**
- 100% cotton.
- Front opening with press buttons branded Ski-Doo.
- Bonded fleece.
- 2 chest pockets.
- 2 hand pockets.
- Ski-Doo suede patch.

**CLUB HOUSE SWEATER** | **454583** • S, M, L, XL, 2XL | Charcoal Grey (**07**), Denim Blue (**79**)



**Description:**
- Heritage look sweater.

**Features and technologies:**
- 60% cotton, 40% acrylic.
- Half-zip.
- Ski-Doo suede patch on sleeve.

**FLANNEL SHIRT** | **454575** • S, M, L, XL, 2XL, 3XL | Beige (**02**), Brick Red (**33**)



**Description:**
- Warm and comfortable Flannel shirt.

**Features and technologies:**
- 100% cotton.
- 4-hole plastic side engraved buttons.
- Corduroy inside stand collar.
- Ski-Doo suede patch on sleeve.

LADIES'

**LADIES FAIR ISLE SWEATER** | **454562** • S, M, L, XL, 2XL | Dark Navy (**16**), Grey (**09**)



**Description:**
- Sweater for ladies.

**Features and technologies:**
- 100% acrylic.
- Ski-Doo woven label on left bottom side.

**LADIES' SKI-DOO TURTLENECK** | **454472** • XS, S, M, L, XL, 2XL, 3XL | Black (**90**), Heather Grey (**27**)



**Description:**
- Ski-Doo Turtleneck with stretch fabric.

**Features and technologies:**
- 90% polyester, 10% spandex.
- Moisture-wicking, anti-microbial treatment & anti-pilling.
- Ski-Doo embroidery logo on collar.

**NEW LADIES' SKI-DOO OVERSHIRT** | **454598** • XS, S, M, L, XL, 2XL | Dark Navy (**16**)



**Description:**
- Ladies Plaid flannel overshirt.

**Features and technologies:**
- 75% polyester, 17% acrylic, 4% polyamide, 2% viscose, 2% wool.
- Front opening with press buttons branded Ski-Doo.
- 2 chest pockets.
- 2 hand pockets.

## FLEECE

MEN'S

### NEW MID-LAYER FLEECE

454577 • S, M, L, XL, 2XL, 3XL

Charcoal Grey (07), Denim Blue (79), Khaki (05)



**Description:**
- Semi-fitted zipped sweatshirt.
- Use everyday and as a mid layer on trails.

**Features and technologies:**
- 100% polyester with anti-microbial.
- Heavy weight fleece for maximum warmth.
- Zipped pocket at arm.
- Ski-Doo embroidery logo at front chest.
- 2 zipped hand pockets.

### NEW FLEECE VEST ZIP-UP

454612 • S, M, L, XL, 2XL, 3XL

Charcoal Grey (07), Denim Blue (79)



**Description:**
- Perfect mix of warmth and mobility.
- Use everyday and as a mid layer on trails.

**Features and technologies:**
- 100% polyester with anti-microbial.
- Heavy weight fleece for maximum warmth.
- Ski-Doo embroidery logo at front chest.
- 2 zipped hand pockets.

LADIES'

### NEW LADIES' SHERPA FLEECE

454586 • XS, S, M, L, XL, 2XL, 3XL

Pink (36), Sand (03)



**Description:**
- Fleece made of sherpa to keep you warm and cozy in style.

**Features and technologies:**
- 100% polyester.
- Ski-Doo embroidered logo at chest.
- 1 chest pocket and 2 hands pockets.
- Elastic binding at cuffs and hem.

### NEW LADIES' MID-LAYER FLEECE

454625 • XS, S, M, L, XL, 2XL

Dark Navy (16), Deep Purple (42)



**Description:**
- Semi-fitted sweatshirt.
- Use everyday and as a mid layer on trails.

**Features and technologies:**
- 100% polyester with anti-microbial.
- Heavy weight fleece for maximum warmth.
- Adjusted fit.
- Ski-Doo embroidery logo at front chest.
- 2 zipped hand pockets.

### NEW LADIES' FLEECE VEST ZIP-UP

454621 • XS, S, M, L, XL, 2XL

Dark Navy (16), Deep Purple (42)



**Description:**
- Perfect mix of warmth and mobility.
- Use everyday and as a mid layer on trails.

**Features and technologies:**
- 100% polyester with anti-microbial.
- Heavy weight fleece for maximum warmth.
- Adjusted fit.
- Ski-Doo embroidery logo at front chest.
- 2 zipped hand pockets.

## POLOS

MEN'S

### NEW MEN'S SKI-DOO TECH POLO

454582 • S, M, L, XL, 2XL, 3XL

Black (90), Charcoal Grey (07), Grey (09)



**Description:**
- Short sleeve tech polo.

**Features and technologies:**
- 95% polyester, 5% spandex.
- Quick-dry and moisture-wicking.
- 4-hole plastic embossed buttons.
- Ski-Doo silver print logo at back.
- Ski-Doo label at chest.

## SWEATSHIRTS

MEN'S

### NEW MEN'S PREMIUM PULLOVER HOODIE

454570 • S, M, L, XL, 2XL, 3XL

Black (90), Heather Charcoal (29), Khaki (05)



**Description:**
- Comfortable Premium Pullover hoodie.

**Features and technologies:**
- 72% cotton, 23% polyester, 5% spandex.
- One side brushed fleece.
- Handwarmer kangaroo pocket.
- 3D heat transfer Ski-Doo logo.
- Rib at cuff and hem.



MEN'S

### NEW MEN'S PREMIUM ZIP-UP HOODIE

454569 • S, M, L, XL, 2XL, 3XL

Charcoal Grey (07), Denim Blue (79), Heather Grey (27)



**Description:**
- Semi-fitted hooded sweatshirt with zip-up.

**Features and technologies:**
- 72% cotton, 23% polyester, 5% spandex.
- One side brushed fleece.
- Handwarmer kangaroo pocket.
- Ski-Doo artwork at back.
- 3D heat transfer Ski-Doo logo at left chest.
- Rib at cuff and hem.

LADIES'

### NEW WOMEN'S PREMIUM PULLOVER HOODIE

454578 • S, M, L, XL, 2XL, 3XL

Deep Purple (42), Heather Grey (27)



**Description:**
- Comfortable Premium Pullover hoodie.

**Features and technologies:**
- 72% cotton, 23% polyester, 5% spandex.
- One side brushed fleece.
- Handwarmer kangaroo pocket.
- 3D embossed artwork at left chest.
- Rib at cuff and hem.

### NEW WOMEN'S PREMIUM ZIP-UP HOODIE

454594 • XS, S, M, L, XL, 2XL, 3XL

Black (90), Burgundy (35)



**Description:**
- Semi-fitted hooded sweatshirt with zip-up.

**Features and technologies:**
- 72% cotton, 23% polyester, 5% spandex.
- Split, inset kangaroo hand pocket.
- Hood with drawsting adjustments.
- Rib at cuff and hem.

## TECHNICAL WEAR

MEN'S

### PUFFER JACKET

454571 • S, M, L, XL, 2XL, 3XL

Black (90), Charcoal Grey (07), Dark Navy (16), Khaki (05)



**Description:**
- Use everyday.

**Features and technologies:**
- 100% strechable polyester.
- Use as a light jacket for cool dry weather or as a very warm mid layer.
- Drawcord hem adjustment in pockets.
- Down-like insulation with high compression.
- Shaped sleeves.
- Removable hood.
- Inside chest pocket for cellphone.

### CLASSIC SOFTSHELL JACKET

454572 • S, M, L, XL, 2XL, 3XL

Black (90), Charcoal Grey (07), Khaki (05)



**Description:**
- Windproof lightweight softshell with a water resistant membrane.
- Use everyday.

**Features and technologies:**
- 88% polyester, 12% spandex.
- Fabric performance: 5,000 mm/5,000 g.
- Breathable wicking technology.
- Backed by micro-fleece for a soft feel.
- Removable and adjustable hood with toggles.

### NEW GARAGE MULTI-PANTS

454614 • XS, S, M, L, XL, 2XL, 3XL

Black (90), Charcoal Grey (07)



**Description:**
- Comfortable working pants.

**Features and technologies:**
- 65% polyester, 35% cotton.
- Adjustable and integrated waistband.
- Zippers at side legs.
- Adjustment system at ankle.
- Bottom leg insert with anti-tearing coating.
- Adjustable velcro tab at waistband.

LADIES'

### LADIES' PUFFER JACKET

440929 • XS, S, M, L, XL, 2XL, 3XL

Black (90), Dark Navy (16), Deep Purple (42), Denim Blue (79)



**Description:**
- Use everyday.

**Features and technologies:**
- 100% stretchable polyester.
- Use as a light jacket for cool dry weather or as a very warm mid layer.
- Drawcord hem adjustment in pockets.
- Down-like insulation with high compression.
- Shaped sleeves.
- Removable hood.
- Inside chest pocket for cellphone.

# SPORTSWEAR SIGNATURE

## JERSEYS

MEN'S

### EMBLEMATIC JERSEY

**454600** • S, M, L, XL, 2XL

Black (**90**), Brick Red (**33**)



**Description:**
- Semi-fitted V-neck jersey.

**Features and technologies:**
- 100% polyester.
- Quick-dry fabric.
- Antibacterial, moisture-wicking fabric.
- Underarm mesh.
- Sublimated print.
- Rib at collar and cuffs.
- Underarm gusset for ease of movements.
- Jersey longer at back to easily enter it in riding pants.

LADIES'

### LADIES' EMBLEMATIC JERSEY

**454592** • S, M, L, XL, 2XL

Black (**90**), Dark Navy (**16**)



**Description:**
- Semi-fitted V-neck jersey.

**Features and technologies:**
- 100% polyester.
- Quick-dry fabric.
- Antibacterial, moisture-wicking fabric.
- Sublimated print.
- Rib at collar and cuffs.
- Underarm gusset for ease of movements.
- Jersey longer at back to easily enter it in riding pants.

## SWEATSHIRTS

MEN'S

### MEN'S SIGNATURE PULLOVER HOODIE

**454588** • S, M, L, XL, 2XL, 3XL

Black (**90**), Heather Charcoal (**29**), Navy (**89**), Whiskey (**28**)



**Description:**
- Comfortable Pullover hoodie.

**Features and technologies:**
- 60% cotton, 40% polyester.
- One side brushed fleece.
- Handwarmer kangaroo pocket.
- Ski-Doo print at chest.
- Rib at cuff and hem.

### MEN'S SIGNATURE CREW SWEATSHIRT

**454731** • S, M, L, XL, 2XL, 3XL

Black (**90**), Burgundy (**35**), Heather Charcoal (**29**), Khaki (**05**)



**Description:**
- Signature sweatshirt with Ski-Doo logo.

**Features and technologies:**
- 60% cotton, 40% polyester.
- Relaxed fit.
- Dropped, set-in sleeves.
- Rib on collar, cuffs and hem.
- Printed logo Ski-Doo at center chest.

### MEN'S SKI-DOO SIGNATURE ZIP-UP HOODIE

**454730** • S, M, L, XL, 2XL, 3XL

Army Green (**77**), Black (**90**), Heather Grey (**27**)



**Description:**
- Semi-fitted hooded sweatshirt.

**Features and technologies:**
- 60% cotton, 40% polyester.
- Ski-Doo print at chest.
- Dropped sleeves.
- Rib on cuffs and hem.
- Drawstring hood.
- Handwarmer kangaroo pocket.

### MEN'S PORTAL PULLOVER HOODIE

**454752** • S, M, L, XL, 2XL, 3XL

Black (**90**), Heather Charcoal (**29**), Indigo Blue (**82**)



**Description:**
- Comfortable Premium Pullover hoodie.

**Features and technologies:**
- 60% cotton, 40% polyester.
- One side brushed fleece.
- Handwarmer kangaroo pocket.
- Atwork graphic at center front chest.



LADIES'

### WOMEN'S SIGNATURE PULLOVER HOODIE

**454595** • XS, S, M, L, XL, 2XL, 3XL

Black (**90**), Blue (**80**), Heather Grey (**27**)



**Description:**
- Comfortable Signature Pullover hoodie.

**Features and technologies:**
- 60% cotton, 40% polyester.
- Hood with drawcord.
- Kangaroo hands pocket.
- Rib on cuffs and hem.
- Logo center chest.

### WOMEN'S SIGNATURE ZIP-UP HOODIE

**454732** • XS, S, M, L, XL, 2XL, 3XL

Army Green (**77**), Deep Purple (**42**), Heather Charcoal (**29**)



**Description:**
- Semi-fitted hooded sweatshirt.

**Features and technologies:**
- 60% cotton, 40% polyester.
- Full-zip.
- Split, inset kangaroo hand pocket.
- Rib on cuffs and hem.
- Drawstring hood.

### NEW WOMEN'S SIGNATURE CREW SWEATSHIRT

**454585** • XS, S, M, L, XL, 2XL, 3XL

Black (**90**), Pink (**36**)



**Description:**
- Signature sweatshirt with Ski-Doo logo.

**Features and technologies:**
- 60% cotton, 40% polyester.
- Relaxed fit.
- Dropped, set-in sleeves.
- Rib on collar, cuffs and hem.
- Ski-Doo printed logo at center chest.

## T-SHIRTS

MEN'S

### MEN'S HIGH ALTITUDE LS T-SHIRT

**454567** • S, M, L, XL, 2XL, 3XL

Black (**90**), Charcoal Grey (**07**), Denim Blue (**79**)



**Description:**
- Casual fit long sleeves t-shirt.

**Features and technologies:**
- 100% cotton.
- Artwork on right sleeve.
- Atwork on left chest.

### MEN'S BOLD T-SHIRT

**454566** • S, M, L, XL, 2XL, 3XL

Army Green (**77**), Black (**90**), Burgundy (**35**)



**Description:**
- Casual T-Shirt for everyday wear.

**Features and technologies:**
- 100% cotton.
- Artwork at left chest and at back.

### MEN'S SKI-DOO SIGNATURE T-SHIRT

**454728** • S, M, L, XL, 2XL, 3XL

Army Green (**77**), Black (**90**), Blue (**80**), Brick Red (**33**), Heather Grey (**27**), Navy (**89**), Whiskey (**28**)



**Description:**
- Signature T-Shirt.

**Features and technologies:**
- 100% cotton.
- Heather Grey (27): 90% cotton, 10% polyester.
- Ski-Doo logo at front.
- Crew neck.

### MEN'S ALPS T-SHIRT

**454565** • S, M, L, XL, 2XL, 3XL

Black (**90**), Dark Navy (**16**), Heather Grey (**27**)



**Description:**
- Casual T-Shirt for everyday wear.

**Features and technologies:**
- 100% cotton.
- Heather Grey (27): 90% cotton, 10% polyester.
- Ski-Doo artwork at center front.

## T-SHIRTS

MEN'S

### NEW MEN'S CLIFF T-SHIRT

**454587** • S, M, L, XL, 2XL, 3XL | Black (**90**), Heather Grey (**27**)



**Description:**
- Casual T-Shirt for everyday wear.

**Features and technologies:**
- 100% cotton.
- Heather Grey (27): 90% cotton, 10% polyester.
- Squared artwork at center front.

LADIES'

### WOMEN'S ALPS T-SHIRT

**454589** • XS, S, M, L, XL, 2XL | Black (**90**), Burgundy (**35**), Denim Blue (**79**)



**Description:**
- Crew neck short sleeves T-Shirt.

**Features and technologies:**
- 100% cotton.
- Graphic at front.

### WOMEN'S DREAM OF SNOW T-SHIRT

**454590** • XS, S, M, L, XL, 2XL | Black (**90**), White (**01**)



**Description:**
- Crew neck short sleeves T-Shirt.

**Features and technologies:**
- 100% cotton.
- Squared graphic at front.

### WOMEN'S SIGNATURE T-SHIRT

**454729** • XS, S, M, L, XL, 2XL | Army Green (**77**), Burgundy (**35**), Heather Charcoal (**29**), Heather Grey (**27**), Indigo Blue (**82**)



**Description:**
- Signature T-Shirt.

**Features and technologies:**
- 100% cotton.
- Heather colors (27) (29): 90% cotton, 10% polyester.
- Ski-Doo logo at front.
- V-neck.



# HEADWEAR

## HEADWEAR

MEN'S

### NEW SKI-DOO EXPLORER HAT

**448742** • S/M, L/XL | Black (**90**), Brick Red (**33**)



**Description:**
- Insulated hat for optimized warmth.

**Features and technologies:**
- Black: 4-way stretch softshell.
- Brick Red: Yarn Dyed Herringbone Plaid.
- Windproof fabric.
- Lined with frosted fake fur.
- Ski-Doo synthetic patch.
- Membrane Performance: 5,000 mm/5,000 g.

### POM-POM HAT

**448732** • One size | Black (**90**), Dark Navy (**16**), Hi-Vis Yellow (**26**)



**Description:**
- Lifestyle hat with Pom-Pom to keep warm in style.

**Features and technologies:**
- 100% acrylic.
- Knitted hat with micro fleece lining.
- Ski-Doo fold up label at back.

### LANDING HAT

**448731** • One size | Black (**90**), Dark Navy (**16**), Deep Purple (**42**), Heather Grey (**27**), Whiskey (**28**)



**Description:**
- Lifestyle hat with the Ski-Doo logo.

**Features and technologies:**
- 95% acrylic, 4% nylon, 1% spandex.
- Foldover cuff.

UNISEX

### REVERSIBLE SKI-DOO BEANIE

**448736** • One size | Black (**90**), Brick Red (**33**), Deep Purple (**42**), Green (**70**), Grey (**09**), Heather Charcoal (**29**), Indigo Blue (**82**), Khaki (**05**)



**Description:**
- 2 in 1 reversible beanie.

**Features and technologies:**
- 95% acrylic, 4% nylon, 1% spandex.
- Knit in logos.

### SKI-DOO SHORT BEANIE

**447869** • One size | Black (**90**), Heather Grey (**27**)



**Description:**
- Minimalist beanie to keep warm in style

**Features and technologies:**
- 100% acrylic.
- Short roll beanie.
- Foldover cuff.
- Ski-Doo loop label.

### SKI-DOO X HAT

**454620** • One size | Black (**90**), Dark Navy (**16**), Heather Grey (**27**)



**Description:**
- Lifestyle hat with Ski-Doo logo.

**Features and technologies:**
- 100% acrylic.
- Hat with X knit logo and sponsors patches.
- Foldover cuff.

### MICRO-FLEECE BEANIE

**448738** • One size | Black (**90**), Burgundy (**35**), Charcoal Grey (**07**)



**Description:**
- Thin beanie to combine breathability and warmth.

**Features and technologies:**
- 92% polyester, 8% spandex.
- Logo in knit.
- Ski-Doo fold up label at back.

UNISEX

**NEW MICRO-FLEECE HEADBAND** | **447877** • One size | Black (**90**), Charcoal Grey (**07**)



**Description:**
- Micro-fleece headband to keep warm without sacrificing breathability.
- Use on trails.

**Features and technologies:**
- Micro polar fleece, spandex.
- Heat Ski-Doo embossed logo center at front.
- Ski-Doo fold up label at back.

**NEW MICRO-FLEECE NECK WARMER** | **448739** • One size | Black (**90**), Burgundy (**35**), Charcoal Grey (**07**)



**Description:**
- Neck warmer to protect against the cold.

**Features and technologies:**
- Micro fleece.
- Ski-Doo logo on the side.
- Ski-Doo fold up label at back.

MEN'S

**NEW MICRO-FLEECE GLOVES** | **446338** • S, M, L | Black (**90**), Charcoal Grey (**07**), Dark Navy (**16**)



**Description:**
- Lifestyle gloves.
- Use as everyday gloves.

**Features and technologies:**
- Heat embossed logo.
- Touch screen finger tip.
- Anti-peeling fleece.
- Elastic at wrist.

LADIES'

**NEW LADIES' FAUX-FUR POM-POM BEANIE** | **447889** • One size | Black (**90**), Brick Red (**33**), Grey (**09**)



**Description:**
- Faux-Fur Pom-Pom beanie to keep warm in style.

**Features and technologies:**
- 100% acrylic.
- Micro-fleece lining.
- Removable fur like pom-pom.
- Ski-Doo metal logo placket.

## CAPS

UNISEX

**NEW EXPLORER FLAP CAP HAT** | **448744** • One size | Black (**90**)



**Description:**
- Perfect mixed between a hat and a cap to protect from the sun and keep warm.
- Perfect to wear during cold days.

**Features and technologies:**
- 100% cotton.
- Adjustable woven strap.

**NEW 5 PANELS CAP** | **448741** • One size | Burgundy (**35**), Sand (**03**)



**Description:**
- New stylish 5 panels cap.
- Perfect to wear everyday.

**Features and technologies:**
- 50% wool, 50% polyester.
- Adjustments at back.

**FLEX FIT CAP** | **448733** • S/M, L/XL, 2XL | Black (**90**), Brick Red (**33**), Heather Grey (**27**)



**Description:**
- Fitted cap with X logo patch at front.
- Perfect to wear everyday.

**Features and technologies:**
- 97% cotton, 3% spandex.
- Ski-Doo signature embroidered on side.

**NEW SKI-DOO UNCONSTRUCTED CAP** | **448730** • One size | Black (**90**), Charcoal Grey (**07**), Denim Blue (**79**)



**Description:**
- Flat cap with logo at front.
- Perfect to wear everyday.

**Features and technologies:**
- 100% cotton.
- Adjustable twill cap.

**FREESTYLE CAP** | **448734** • One size | Black (**90**), Indigo Blue (**82**), White (**01**)



**Description:**
- Flat cap with an embroidery at front.
- Perfect to wear everyday.

**Features and technologies:**
- 60% cotton, 40% polyester.
- Adjustable twill cap.



UNISEX

**SKI-DOO X-TEAM CAP** | **454619** • One size | Charcoal Grey (**07**), Dark Navy (**16**), Green (**70**)



**Description:**
- Racing look cap with a X logo artwork at front.
- Perfect to wear everyday.

**Features and technologies:**
- 100% cotton.
- Plastic adjustment at back.
- Sponsors logos embroideries on sides.

**SIGNATURE CAP** | **448682** • One size | Army Green (**77**), Black (**90**), Burgundy (**35**), Dark Navy (**16**), Heather Charcoal (**29**), Heather Grey (**27**), Whiskey (**28**), White (**01**)



**Description:**
- Cap with signature logo
- Perfect to wear everyday.

**Features and technologies:**
- 100% cotton.
- Plastic adjustment at back.
- Ski-Doo embroidery logo at front.

# KIDS AND TEENS

## JACKETS

TEEN

**TEENS' PARTICLE JACKET** | **440952** • 7, 8, 10, 12, 14, 16 | Black (**90**), Deep Purple (**42**), Indigo Blue (**82**)



**Description and terrain:**
- Use on trails.

**Features and technologies:**
- 200 g of ThermaLoft® insulation.
- Critical seams and logos sealed.
- Radiant Core technology to keep warm.
- Reflective details on back and sleeves for better visibility.
- Polar fleece at front body and top arms for added warmth.
- Growing sleeves system that allows an additional 2 in. Lenght.
- Waterproof zippers.
- Removable hood.
- Fixed powder skirt.
- Inside cell phone pocket.
- Inside beanie pocket.

**Performance:**
Waterproofness | Breathability | Warmth

**Key benefits:**
Cuts wind | Reflective | Adjustable lenght

KIDS'

**KIDS' MINIUM JACKET** | **440953** • 3, 4, 5, 6 | Indigo Blue (**82**), Pink (**36**)



**Description and terrain:**
- Use on trails.

**Features and technologies:**
- 200 g of ThermaLoft® insulation.
- Critical seams and logos sealed.
- Radiant Core technology to keep warm.
- Reflective details on back and sleeves for better visibility.
- Polar fleece at front body and top arms for added warmth.
- Growing sleeves system that allows an additional 2 in. Lenght.

**Performance:**
Waterproofness | Breathability | Warmth

**Key benefits:**
Cuts wind | Reflective | Adjustable lenght

## HIGHPANTS

TEEN

**TEENS' X-TEAM HIGHPANTS** | **441605** • 7, 8, 10, 12, 14, 16 | Black (**90**)



**Description and terrain:**
- Warm Highpants with a racing look.
- Use on trails.

**Features and technologies:**
- 100% waterproof, breathable and windproof.
- 200 g of Thermal Loft® insulation.
- Reinforced fabric at seat, knees and bottom of legs
- Critical seams sealed.
- Articulated, padded and shaped knees.
- Adjustable waist.
- Full-length side zippers.
- Growing-leg system for lengthening legs by 4" (10 cm) as child gets taller.
- Storm gaiters.
- Polar fleece-lined seat for added warmth.

**Performance:**
Waterproofness | Breathability | Warmth

**Key benefits:**
Cuts wind | Reinforced | Adjustable lenght

## HIGHPANTS

KIDS'

### KIDS' X-TEAM HIGHPANTS

**441580** • 3, 4, 5, 6 | Black (**90**)



**Description and terrain:**
- Warm Highpants with a racing look.
- Use on trails.

**Features and technologies:**
- 100% waterproof, breathable and windproof.
- 200 g of Thermal Loft® insulation.
- Reinforced fabric at knees and bottom legs.
- 100% seams and logos sealed.
- Articulated, padded and shaped knees.
- owing-leg system for lengthening legs by 4" (10 cm) as child gets taller.
- Adjustable waist.
- Full-length side zippers.
- Reinforced seat, knees and inner legs.
- Storm gaiters.
- Polar fleece-lined seat for added warmth.

**Performance:**

Waterproofness | Breathability | Warmth

**Key benefits:**

Cuts wind | Reinforced | Adjustable lenght

## HANDWEAR

TEEN

### TEENS' PARTICLE MITTS

**446343** • 6-8, 10-12, 14-16 | Black (**90**), Indigo Blue (**82**)



**Description and terrain:**
- Extra warm mitts for teens.
- Use for trail and Deep snow riding.

**Features and technologies:**
- Top hand: 240 g Thermal Loft Palm: 140 g Thermal Loft.
- Waterproof, windproof and breathable insert.
- Heat pack pocket built into inner mitt lining.

**Performance:**

Waterproofness | Dextirity | Warmth

### TEENS' PARTICLE GLOVES

**446344** • 6-8, 10-12, 14-16 | Black (**90**), Indigo Blue (**82**)



**Description and terrain:**
- Extra warm gloves for teens.
- Use for trail and Deep snow riding.

**Features and technologies:**
- Top hand: 240 g Thermal Loft Palm: 100 g Thermal Loft.
- Waterproof, windproof and breathable insert.
- 4-ways stretch fleece cuff.

**Performance:**

Waterproofness | Dextirity | Warmth

KIDS'

### KIDS' MINIUM MITTS

**446345** • 2, 4, 6 | Black (**90**)



**Description and terrain:**
- Extra warm mitts for kids.
- Use for trail and Deep snow riding.

**Features and technologies:**
- Top hand: 100 g Thermal Loft, 133 g PrimaLoft Gold; Palm: 100 g Thermal Loft.
- Waterproof, windproof and breathable insert.
- Side zipper for easy in and out.

**Performance:**

Waterproofness | Dextirity | Warmth

KIDS'/TEEN

### NEW MICRO-FLEECE KIDS MITTS

**446341** • One size | Black (**90**), Dark Navy (**16**)



**Description and terrain:**
- Lifestyle mitts for kids.
- Use as everyday mitts.

**Features and technologies:**
- 92% polyester, 8% spandex.
- Silicone patch.
- Micro polar fleece.

## HEADWEAR

KIDS'/TEEN

### YOUTH ACTIVE BALACLAVA

**454749** • S/M, L/XL | Black (**90**)



**Description:**
- Basic Balaclava for warmth, dryness and comfort.

**Features and technologies:**
- 91% polyester, 9% spandex.
- Flatlocked seams to prevent skin chafing.
- Non-branded.

KIDS'

### KIDS' POM-POM BEANIE

**448737** • One size | Dark Navy (**16**), Indigo Blue (**82**), Pink (**36**)



**Description:**
- Pom-Pom beanie to keep warm in style.

**Features and technologies:**
- 100% acrylic.
- Knitted beanie with micro fleece lining.
- Silicone logo patch.
- Ski-Doo fold up label at back.

### NEW KIDS' NECK-WARMER

**448728** • One size | Black (**90**), Dark Navy (**16**)



**Description:**
- Neck-warmer for kids to protect against the cold.

**Features and technologies:**
- Micro polar fleece, spandex.
- Silicone logo patch.
- Ski-Doo fold up label at back.

## CAPS

KIDS'/TEEN

### KIDS' SKI-DOO BALL CAP

**447878** • One size | Deep Purple (**42**), Heather Charcoal (**29**)



**Description:**
- Ball cap for kids.

**Features and technologies:**
- 60% cotton, 40% polyester.
- Adjustable twill cap.
- Ski-Doo synthetic patch at front.

## FLEECE

TEEN

### TEENS' PULLOVER FLEECE

**454610** • 7-8, 10-12, 14-16 | Army Green (**77**), Dark Navy (**16**)



**Description:**
- Mid weight polar fleece for additional warmth.

**Features and technologies:**
- 100% polyester.
- 2 handwarmer pockets.
- Suede patch with Ski-Doo logo at arm.
- ¼ snap opening.

KIDS'

### KIDS' FULL ZIP FLEECE

**454608** • 3-4, 5-6 | Dark Navy (**16**), Indigo Blue (**82**)



**Description:**
- Heavy weight polar fleece for maximum warmth.

**Features and technologies:**
- 100% polyester micro fleece.
- 2 handwarmer pockets.
- Ski-Doo patch print at chest.
- Elastic binding at hood, cuffs and hem.

## JERSEYS

KIDS'/TEEN

### YOUTH EMBLEMATIC JERSEY

**454607** • 3-4, 5-6, 7-8, 10-12, 14-16 | Black (**90**), Pink (**36**)



**Description:**
- Semi-fitted V-neck junior jersey.

**Features and technologies:**
- 100% polyester.
- Quick-dry fabric.
- Antibacterial, moisture-wicking fabric.
- Sublimated print.
- Rib at collar and cuffs.
- Jersey longer at back to easily enter it in riding pants.

## SOCKS

KIDS'

### KIDS' THERMAL SOCKS

**444252** • S/M, L/XL | Indigo Blue (**82**), Pink (**36**)



**Description:**
- Warm, breathable and comfortable sock for kids.

**Features and technologies:**
- Durable sock.
- Elastic materials for comfort.
- Ventialtion channels.
- Itch-free and shrink treated to retain their size and shape for years.

## SWEATSHIRTS

KIDS'

**NEW KIDS' ZIP-UP HOODIE** | **454593** • 3-4, 5-6 | Burgundy (**35**), Dark Navy (**16**)



**Description:**
- Comfortable Zip-Up hoodie for kids.

**Features and technologies:**
- One side brushed fleece.
- Handwarmer kangaroo pocket.
- Bombardier logo at left chest and at the back.

## T-SHIRTS

KIDS'

**NEW KIDS' BASEBALL T-SHIRT** | **454609** • 3-4, 5-6 | Black (**90**), Charcoal Grey (**07**)



**Description:**
- ¾ sleeves kids T-Shirt.

**Features and technologies:**
- 60% cotton, 40% polyester.
- Printed logo at chest.

**KIDS' T-SHIRT** | **454615** • 3-4, 5-6 | Burgundy (**35**), Heather Grey (**27**)



**Description:**
- Short sleeves kids T-Shirt.

**Features and technologies:**
- 100% cotton.
- Heather Grey (27): 90% cotton, 10% polyester.
- Printed logo at chest.

# PLAY & LICENSING PRODUCTS

## WINTER FUN

**3-SKI SNOW SLED** | **B103900000**



- Ski-Doo 3-Ski Snow Sled for single rider.
- Sturdy design features a strong tubular aluminum frame, high-density polyethylene hood and transparent windshield.
- Handlebars and 3 grooved skis enhance steering and maneuverability.
- Brake system and non-slipping seat offer a controlled ride.
- Suspension spring system ensures a steady and comfortable slide.
- Ski-Doo Renegade X-RS UV resistant decals.
- Tow leash to help transport uphill.
- Easy assembly.
- For ages 6 and up.
- Dimensions: 52" L x 20" W x 14" H.
- Weight: 5 lb.
- Maximum weight capacity: 88 lb/40 kg.

**MINI SNOW SLED** | **B106800000**



- Mini Ski-Doo Snow Sled for single rider.
- High-density durable plastic construction.
- Compact, lightweight and easy to carry uphill.
- Centered handle for enhanced steering and control.
- Textured seat for extra grip.
- Safe feet-first design to easily slow down or stop using feet.
- For ages 6 and up.
- Dimensions: 22" L x 13 ½" W x 15" H.
- Weight: 3.5 lb.
- Maximum weight capacity: 165 lb.

**FOAM SLED (55" X 21 ½")** | **B106830000/B106840000**



- Ski-Doo Foam Sled for up to two riders.
- Lightweight and easy to carry uphill.
- Revolutionary patented polymer foam bonding construction.
- EPS core absorbs shocks and integrates 4 molded handles.
- Water-resistant XPE top skin with colorful graphic designs.
- 3D padded textured grip deck.
- High-density polyethylene slick bottom for ultimate glide and speed.
- Parabolic rails for great stability and maneuverability.
- For ages 6 and up.
- Dimensions: 55" L x 21 ½" W.

EXPLORE AN ENTIRE WORLD OF ADVENTURE WITH ALL OF OUR BRP PRODUCTS. **BRP.COM**





BRP

ski-doo LYNX SEA-DOO can-am ROTAX ALUMACRAFT Manitou QUINTREX



// SKI-DOO.COM

A BRP BRAND

ski-doo

BRP

# CROSSOVER ACE SERIES



# OPERATOR'S GUIDE

**Includes Safety, Vehicle and Maintenance Information**

2023

## ⚠ WARNING

Read this guide thoroughly. It contains important safety information.
Minimum recommended operators age: 16 years old.
Keep this operator's guide with the vehicle at all times.

**520002954**

**Original Instructions**

**⚠ WARNING**

**This vehicle may exceed the performance of other vehicles you may have ridden in the past. Take time to familiarize yourself with your new vehicle.**

## CALIFORNIA PROPOSITION 65 WARNING

**⚠ WARNING**

**Operating, servicing and maintaining an off-road vehicle can expose you to chemicals including engine exhaust, carbon monoxide, phthalates, and lead, which are known to the State of California to cause cancer and birth defects or other reproductive harm. To minimize exposure, avoid breathing exhaust, do not idle the engine except as necessary, service your vehicle in a well-ventilated area and wear gloves or wash your hands frequently when servicing your vehicle. For more information go to www.p65warnings.ca.gov/products/passenger-vehicle.**

In Canada, products are distributed and serviced by Bombardier Recreational Products Inc. (BRP).
In the USA, products are distributed and serviced by BRP US Inc.
In the European Economic Area (which is comprised of the member states of the European Union plus the United Kingdom, Norway, Iceland and Liechtenstein), the Commonwealth of the Independent States (including Ukraine and Turkmenistan) and Turkey, products are distributed and serviced by BRP European Distribution S.A. and other affiliates or subsidiaries of BRP.
For all other countries, products are distributed and serviced by Bombardier Recreational Products Inc. (BRP) or its affiliates.

™® Trademarks of BRP or its affiliates.
This is a non-exhaustive list of trademarks that are the property of Bombardier Recreational Products Inc. or its affiliates:

| | | |
|---|---|---|
| ACE™ | D.E.S.S.™ | HPG™ |
| iTC™ | RER™ | ROTAX® |
| SKI-DOO® | XPS® | |

| | |
|---|---|
| Deutsch | Dieses Handbuch ist möglicherweise in Ihrer Landessprache verfügbar. Bitte wenden Sie sich an Ihren Händler oder besuchen Sie: **www.operatorsguides.brp.com** |
| English | This guide may be available in your language. Check with your dealer or go to: **www.operatorsguides.brp.com** |
| Español | Es posible que este manual esté disponible en su idioma. Consulte a su distribuidor o visite: **www.operatorsguides.brp.com** |
| Français | Ce guide peut être disponible dans votre langue. Vérifier avec votre concessionnaire ou aller à: **www.operatorsguides.brp.com** |
| Italiano | Questa guida potrebbe essere disponibile nella propria lingua. Contattare il concessionario o consultare: **www.operatorsguides.brp.com** |
| 中文 | 本手册可能有您的语种的翻译版本。请向经销商问询，或者登录 **www.operatorsguides.brp.com** 查询。 |
| 日本語 | このガイドは、言語によって翻訳版が用意されています。. ディーラーに問い合わせるか、次のアドレスでご確認ください： **www.operatorsguides.brp.com** |
| Nederlands | Deze handleiding kan beschikbaar zijn in uw taal. Vraag het aan uw dealer of ga naar: **www.operatorsguides.brp.com** |
| Norsk | Denne boken kan finnes tilgjengelig på ditt eget språk. Kontakt din forhandler eller gå til: **www.operatorsguides.brp.com** |
| Português | Este manual pode estar disponível em seu idioma. Fale com sua concessionária ou visite o site: **www.operatorsguides.brp.com** |
| Русский | Воспользуйтесь руководством на вашем языке. Узнайте о его наличии у дилера или на странице по адресу **www.operatorsguides.brp.com** |
| Suomi | Käyttöohjekirja voi olla saatavissa omalla kielelläsi. Tarkista jälleenmyyjältä tai käy osoitteessa: **www.operatorsguides.brp.com** |
| Svenska | Denna bok kan finnas tillgänglig på ditt språk. Kontakta din återförsäljare eller gå till: **www.operatorsguides.brp.com** |

| Model | Package | Engine |
|---|---|---|
| Expedition | Sport | 600 ACE |
| | | 900 ACE |
| | LE 20/ 24 in. | 900 ACE |
| | | 900 ACE Turbo |
| | | 900 ACE Turbo R |
| | SE 20 in. | 900 ACE |
| | | 900 ACE Turbo |
| | | 900 ACE Turbo R |
| | Extreme | 900 ACE Turbo R |

# TABLE OF CONTENTS

*GENERAL INFORMATION*

**GENERAL INFORMATION ..... 10**
.....10
Know Before you Go .....10
Safety Messages .....10
About this Operator's Guide .....11
Respect of the Environment .....12

*SAFETY INFORMATION*

**BEFORE YOU GO ..... 16**
Operating Age and Ability .....16
Drugs and Alcohol .....16
Avalanche Safety Training Courses .....16
Protective Gear .....17
Required Equipment .....17
**GET FAMILIAR WITH THE SNOWMOBILE ..... 19**
Track Propulsion System .....19
Steering .....19
Tether Cord .....20
Braking .....20
Parking Brake .....20
Programmable D.E.S.S. Key .....20
Carrying Loads .....21
Towing Loads .....21
Towing Another Snowmobile .....22
Accessories and Modifications .....23
Traction Enhancing Products .....23
**RIDE SAFELY ..... 27**
Rider Position (Forward Operation) .....27
Rider Position (Reverse Operation) .....29
Riding with Passenger(s) .....29
Riding Alone .....30
Riding in a Group .....30
Avoiding Collisions .....32
Riding Behaviors .....33
Speeding .....33
Moving Parts .....33
Know Terrain and Riding Variations .....34
Respect of the Wildlife .....38
Carbon Monoxide Poisoning .....38
Gasoline Fires and Other Hazards .....39
Burns from Hot Parts .....39
**PRACTICE EXERCISES ..... 40**
Where to Practice Exercises .....40
Exercises to Practice .....40

**FUELING** ..... **43**
Fueling Procedure ..... 43
**VEHICLE TRANSPORTATION** ..... **44**
**IMPORTANT ON-PRODUCT LABELS (CANADA/UNITED STATES)** ..... **45**
Vehicle Safety Labels ..... 45
Technical Information Labels ..... 71
Hang Tag(s) ..... 75
**IMPORTANT ON-PRODUCT LABELS (ALL COUNTRIES EXCEPT CANADA/UNITED STATES)** ..... **77**
Vehicle Safety Labels ..... 77
**PRE-RIDE INSPECTION** ..... **116**
Before Starting the Engine ..... 116
After Engine is Started ..... 116
Pre-Ride Check List ..... 117
**REPORTING SAFETY DEFECTS** ..... **119**

## *VEHICLE INFORMATION*

**PRIMARY CONTROLS** ..... **122**
Handlebar ..... 122
Throttle Lever ..... 122
Emergency Engine Stop Switch ..... 125
Brake Lever ..... 127
Parking Brake Lever ..... 128
Engine Cut-off Switch ..... 130
**SECONDARY CONTROLS** ..... **132**
Handlebar Multifunction Switch ..... 132
Rotary Control (if equipped) ..... 140
Driving Modes Button ..... 142
Gearshift Lever ..... 143
Reverse Lever (if equipped) ..... 144
Horn Button (if equipped) ..... 145
Passenger Heated Grip Switch (if equipped) ..... 145
**BODY AND SEAT** ..... **147**
Front and Rear Bumpers ..... 147
Windshield ..... 149
Adjustable Mirrors (if equipped) ..... 152
Front Storage Compartment ..... 153
Side Panels ..... 154
Upper Body Module ..... 156
Seat ..... 163
**EQUIPMENT** ..... **172**
Operator's Guide ..... 172
Heated Cell Case (if equipped) ..... 172
Power Outlet - USB (if equipped) ..... 172
Adjustable Handlebar Riser (If Equipped) ..... 173
Mountain Strap ..... 174

Electric Visor Jack Connector ..... 175
Drive Belt Guard ..... 175
Spare Drive Belt Holder ..... 179
Tools ..... 181
Rear Storage Compartment ..... 183
Cargo Box (if equipped) ..... 185
Hitch (if equipped) ..... 187
**COMPACT DIGITAL DISPLAY ..... 191**
Display Features ..... 191
**7.2" DIGITAL DISPLAY ..... 200**
Multifunction Display ..... 200
Warning Lamps and Indicators ..... 204
Settings ..... 206
**LARGE PANORAMIC 7.8" WIDE LCD DISPLAY ..... 207**
Basic Functions ..... 207
Settings ..... 214
Pairing your Smartphone Via Bluetooth ..... 217
Pairing a Helmet ..... 218
BRP GO! App ..... 218
Quick Tour of the BRP GO! App ..... 220
Messages in Multifunction Gauge ..... 221
**FUEL ..... 223**
Fuel Requirements ..... 223
Fueling Procedure ..... 224
**ENGINE OIL ..... 226**
Recommended Oil ..... 226
**DRIVING MODES ..... 227**
ECO Mode (Fuel Economy Mode) ..... 227
Standard Mode ..... 227
Sport Mode ..... 227
Navigating the Driving Modes ..... 228
**BREAK-IN PERIOD ..... 230**
Operation During Break-In ..... 230
**BASIC PROCEDURES ..... 231**
Engine Starting Procedure ..... 231
Emergency Starting ..... 231
Vehicle Warm-Up ..... 231
Shifting in High or Low range ..... 232
Shifting in Reverse ..... 233
Shifting in Forward from Reverse ..... 235
Shutting Off the Engine ..... 235
**RIDING CONDITIONS AND YOUR SNOWMOBILE ..... 236**
Altitude ..... 236
Temperature ..... 236
Hard Packed Snow ..... 236
**TUNE YOUR RIDE ..... 238**
Rear Suspension Adjustments ..... 239
Front Suspension Adjustments ..... 254
Adjustment Tips According to Vehicle Behavior ..... 257

## *MAINTENANCE*

**MAINTENANCE SCHEDULE** ..... **260**
EPA Regulation - Canadian and USA Vehicles ..... 260
Trail/ Crossover/ Utility Usage ..... 261
Maintenance Schedule ..... 262
**MAINTENANCE PROCEDURES** ..... **271**
Engine Coolant ..... 271
Engine Oil ..... 272
Engine Oil Filter ..... 279
Exhaust System ..... 281
Spark Plugs ..... 282
Brake Fluid ..... 282
Chaincase Oil ..... 285
Gearbox Oil ..... 289
Drive Chain ..... 293
Drive Belt ..... 294
Track ..... 300
Suspension ..... 308
Skis ..... 310
Fuses ..... 310
Headlights ..... 313
Battery ..... 317
**VEHICLE CARE** ..... **324**
Post-Operation Care ..... 324
Vehicle Cleaning and Protection ..... 324
**STORAGE** ..... **326**
**MAINTENANCE RECORDS** ..... **327**

## *TECHNICAL INFORMATION*

**VEHICLE IDENTIFICATION** ..... **336**
Vehicle Description Decal ..... 336
Identification Numbers ..... 337
**COMPLIANCE LABELS** ..... **339**
EPA Compliance Label ..... 339
SSCC Label ..... 340
Yellowstone National Park Compliance Label ..... 341
Regulation (EU) 2016/1628 applicable for Non-Road Mobile Machineries ..... 342
**NOISE EMISSION AND VIBRATION VALUES** ..... **344**
**EU DECLARATION OF CONFORMITY** ..... **345**
**UK DECLARATION OF CONFORMITY** ..... **346**
**EAC DECLARATION OF CONFORMITY** ..... **347**
**EPA CERTIFIED ENGINES** ..... **348**
Engine Emissions Information ..... 348

**RADIO FREQUENCY DIGITALLY ENCODED SECURITY SYSTEM (RF D.E.S.S. KEY)....350**
**MULTIFUNCTION GAUGE REGULATORY INFORMATION ..351**

*TECHNICAL SPECIFICATIONS*

**ENGINE....356**
600 ACE....356
900 ACE....357
900 ACE Turbo....358
900 ACE Turbo R....360
**VEHICLE....362**
Expedition....362

*TROUBLESHOOTING*

**TROUBLESHOOTING-GUIDELINES....374**
**MONITORING SYSTEM....377**
Pilot Lamps, Messages and Beeper Codes....377
Fault Codes....381

*WARRANTY*

**BRP LIMITED WARRANTY USA AND CANADA: 2023 SKI-DOO® SNOWMOBILES....384**
SCOPE OF THE LIMITED WARRANTY....384
LIMITATIONS OF LIABILITY....384
EXCLUSIONS – ARE NOT WARRANTED....384
WARRANTY COVERAGE PERIOD....385
CONDITIONS REQUIRED FOR WARRANTY COVERAGE..385
WHAT TO DO TO OBTAIN WARRANTY COVERAGE....386
WHAT BRP WILL DO....386
TRANSFER....387
CONSUMER ASSISTANCE....387
**US EPA EMISSION-RELATED WARRANTY....388**
Emission-Related Warranty Period....388
Components Covered....389
Limited Applicability....390
**BRP INTERNATIONAL LIMITED WARRANTY: 2023 SKI-DOO® SNOWMOBILES....391**
SCOPE OF THE LIMITED WARRANTY....391
LIMITATIONS OF LIABILITY....391
EXCLUSIONS – ARE NOT WARRANTED....392
WARRANTY COVERAGE PERIOD....392
CONDITIONS TO HAVE WARRANTY COVERAGE....393
WHAT TO DO TO OBTAIN WARRANTY COVERAGE....394

WHAT BRP WILL DO ..... 394
TRANSFER ..... 394
CONSUMER ASSISTANCE ..... 395
**BRP LIMITED WARRANTY FOR THE EUROPEAN ECONOMIC AND THE COMMONWEALTH OF THE INDEPENDENT STATES (CIS) AREAS AND TURKEY: 2023 SKI-DOO® SNOWMOBILES ..... 396**
SCOPE OF THE LIMITED WARRANTY ..... 396
LIMITATIONS OF LIABILITY ..... 396
EXCLUSIONS – ARE NOT WARRANTED ..... 397
WARRANTY COVERAGE PERIOD ..... 397
CONDITIONS TO HAVE WARRANTY COVERAGE ..... 398
WHAT TO DO TO OBTAIN WARRANTY COVERAGE ..... 398
WHAT BRP WILL DO ..... 399
TRANSFER ..... 399
CONSUMER ASSISTANCE ..... 399

***CUSTOMER INFORMATION***

**DATA PRIVACY INFORMATION ..... 402**
**CHANGE OF ADDRESS/OWNERSHIP ..... 405**

# GENERAL INFORMATION

# GENERAL INFORMATION

Congratulations on your purchase of a new BRP snowmobile. Whatever model you have chosen, it is backed by the Bombardier Recreational Products Inc. (BRP) warranty and a network of authorized BRP snowmobile dealers ready to provide the parts, service or accessories you may require.

Your dealer is committed to your satisfaction. He has taken training to perform the initial set-up and inspection of your snowmobile as well as completed the final adjustment required to suit your specific weight and riding environment before you took possession.

At delivery, you were informed of the warranty coverage and signed the Pre-delivery Check List to ensure your new vehicle was prepared to your entire satisfaction.

## Know Before you Go

To learn how to reduce the risk for you, your passenger or bystanders being injured or killed, read the following sections before you operate the vehicle:

– *Safety Information*
– *Vehicle Information*.

Also read all safety labels on your snowmobile and watch attentively the safety video located at:

**www.ski-doo.com/safety**.

Or, use the following QR code.

## Safety Messages

This operator's guide utilizes the following symbols and words to emphasize particular information:

The safety alert symbol ⚠ indicates a potential injury hazard.

| ⚠ WARNING |
| --- |
| **Indicates a potential hazard which, if not avoided, could result in serious injury or death.** |

**⚠ CAUTION**

**Indicates a hazard situation which, if not avoided, could result in minor or moderate injury.**

***NOTICE***

**Indicates an instruction which, if not followed, could severely damage vehicle components or other property.**

## About this Operator's Guide

This operator's guide has been prepared to acquaint the owner, operator and passenger with this snowmobile and its various controls, maintenance and safe riding instructions.

The following terminology in regards to operator, passenger and vehicle configuration is used as follows throughout this guide:

- **Operator**: refers to the person being behind the controls and driving the snowmobile.
- **Passenger**: refers to a person sitting behind the operator.
- **1-UP**: refers to a model designed for an operator only.
- **2-UP**: refers to a model designed to accommodate **one** passenger.

Keep this operator's guide in the vehicle as you can refer to it for the operation, instructing others, maintenance and troubleshooting.

Note that this guide is available in several languages. In the event of any discrepancy, the English version shall prevail.

If you want to view and/or print an extra copy of your operator's guide, simply visit the following website:

**www.operatorsguides.brp.com**

The information contained in this document is correct at the time of publication. BRP, however, maintains a policy of continuous improvement of its products without imposing upon itself any obligation to install them on products previously manufactured. Due to late changes, some differences between the manufactured product and the descriptions and/or specifications in this guide may occur. BRP reserves the right at any time to discontinue or change specifications, designs, features, models or equipment without incurring any obligation upon itself.

This operator's guide should remain with the vehicle when it's sold.

## Respect of the Environment

The guidelines that we support are not designed to limit your snowmobiling fun, but to preserve the beautiful freedom that you can experience only on a snowmobile! These guidelines will keep snowmobilers healthy, happy and able to introduce others to what they know and enjoy about their favorite winter pastime. So, the next time you hit the trails on a cool, crisp and clear winter day, we ask you to remember that you are paving the way for the future of our sport. Help us lead it down the right path! From all of us at BRP, thank you for doing your share.

There is nothing more exhilarating than snowmobiling. Venturing onto snowmobile trails that cross wild areas is an exciting and healthy winter sport. However, as the number of people using these recreational parks increases, so does the potential for damage to the environment. Abuse of land, facilities and resources inevitably leads to restrictions and closures of both private and public land.

In essence, the greatest threat to our sport, is all around us. Which leaves us with one logical choice. When we snowmobile, we must always ride responsibly.

The vast majority respect the law and the environment. Each of us must set an example for those who are new to the sport, young and old alike.

It is in every one's best interest to tread lightly into our recreational areas. Because, in the long run, to protect the sport we must preserve the environment.

Recognizing the importance of this issue and the need for snowmobilers to do their share in preserving areas that make it possible to enjoy our sport, BRP has developed the “Light Treading Is Smart Sledding” campaign for snowmobilers.

Light Treading refers to more than the thread of our tracks. It's a statement of concern, respect and willingness to take the lead and take action. It applies to the environment in general, its proper care and maintenance, its natural inhabitants and all enthusiasts and the public at large who enjoy the great outdoors. With this theme, we invite all snowmobilers to remember that respecting the environment is not only critical to the future of our industry but to future generations.

Light Treading in no way suggests you should curb your appetite for snowmobiling fun! It simply means tread with respect!

The fundamental objective of Light Treading is one of respect for where and how you ride a snowmobile. You're a light treader when you follow the principles below.

**Become informed**. Obtain maps, regulations and other information from the Forest Service or from other public land agencies. Learn the rules and follow them and that goes for speed limits, too!

**Avoid** running over young trees, shrubs, and grasses and don't cut wood. On flatlands or areas where trail riding is popular, it's important to ride only where authorized. Remember, there is a link between protecting your environment and your own safety.

**Respect wildlife** and be particularly sensitive of animals that are rearing young or suffering from food shortage. Stress can sap scarce energy reserves. Refrain from riding in areas where only animals are intended to tread!

**Obey** gate closures and regulatory signs and remember, light treaders don't litter!

**Stay out** of wilderness areas. They're closed to all vehicles. Know where the boundaries are.

**Obtain permission** to travel across private land. Respect the rights of landowners and other people's privacy. Remember, snowmobile technology has lowered the noise factor considerably, but you still shouldn't rev your engines where quiet “is the order of the day”.

Snowmobilers know all too well the efforts that have been made throughout the sport's history to enjoy access to areas where people can snowmobile safely and responsibly. This effort continues today, as strong as ever.

Respecting the areas where we ride... wherever they may be... is the only way to ensure their future enjoyment. That's one major reason why we know you'll agree that Light Treading is smart sledding! And there are more.

Enjoying the opportunity to see winter and all its natural majestic wonders, is an experience cherished by snowmobilers. Light Treading will preserve this opportunity and will make it possible for us to expose others to the beauty of winter and the unique thrill of our sport! Light Treading will help our sport to grow!

Finally, Light Treading is the sign of a smart snowmobiler. You don't have to leave big tracks or careen through a virgin forest to show you can ride. So whether you're driving a high performance BRP snowmobile or any other make or model, show you know what you're doing. Show you know how to send snow flying and make tracks with a light touch!

This page is intentionally blank

# SAFETY INFORMATION

# BEFORE YOU GO

**⚠ WARNING**

**Disregarding any of the safety precautions and instructions contained in this section could cause injury including the possibility of death.**

## Operating Age and Ability

Operators must be qualified. Make sure the operator is 16 or older. Your state (or province) may have additional requirements. Laws regarding the minimum age and licensing requirements vary from one jurisdiction to another. Be sure to contact the local authorities for information regarding the legal operation of a snowmobile in the intended jurisdiction of use. BRP highly recommends that you take a safety riding course. Basic training is required for the safe operation of any snowmobile.

Operation of this snowmobile with a disability that impairs vision, reaction time, judgment, or operation of the controls is not recommended. The safe use of your snowmobile depends on many conditions such as visibility, speed, weather, environment, traffic, vehicle condition and the condition of the operator. The performance of some snowmobiles may significantly exceed that of other snowmobiles you have operated. Therefore, use by novice or inexperienced operators is not recommended.

Each passenger must be able to simultaneously place both feet firmly flat against each footboard when properly seated.

## Drugs and Alcohol

Never ride after consuming alcohol or drugs. Riding on a snowmobile requires the operator and passenger (s) to be sober, attentive and alert. The use of drugs and alcohol, singly or in combination, decreases reaction time, impedes judgment, impairs vision, and inhibits your ability to safely ride on a snowmobile.

## Avalanche Safety Training Courses

We recommend that all mountain riders take a local avalanche safety training course to become more familiar with snow conditions and learn how to properly use their equipment. Here are some web sites that can help you finding important information:

– – US: www.avalanche.org
– – Europe: www.avalanches.org
– – Canada: www.avalanche.ca

## Protective Gear

Proper snowmobile clothing should be worn by all riders. It should be comfortable and not too tight. Always check the weather forecast before going on a ride. Dress for the coldest weather expected. Thermal underwear next to the skin also provides a good insulation.

Always wear an approved helmet at all times for safety and comfort. They provide both warmth and reduce injury. A stocking type cap, balaclava and face mask should always be carried or worn. Goggles or a face shield that attach to the helmet are indispensable.

Hands should be protected by a pair of snowmobile gloves or mitts which have sufficient insulation and allow use of thumbs and fingers for operation of controls.

Rubber bottom boots with either a nylon or a leather top, with removable felt liners are best suited for snowmobiling.

You should keep yourself as dry as possible when snowmobiling. When you come indoors, take your snowmobile suit and boots off and make certain they dry properly.

Do not wear a long scarf or loose apparels that could get caught in moving parts.

Carry colored lens goggles.

## Required Equipment

As the owner of the snowmobile, you are responsible for ensuring that all required safety equipment is aboard. Check your local regulations about requirements.

| | |
|---|---|
| First aid kit | Provided tool kit |
| Mobile phone | Knife |
| Spare spark plugs | Flashlight |
| Adhesive tape (duct tape) | Trail map |
| Spare drive belt | Snack |
| Probe* | Shovel* |

| | |
|---|---|
| Avalanche beacon* | - |
| *When riding in an area with avalanche risk | |

# GET FAMILIAR WITH THE SNOWMOBILE

This vehicle may exceed the performance of other vehicles you may have ridden. Take time to familiarize yourself with your new vehicle.

Inexperienced riders may overlook risks and be surprised by vehicle's specific behavior and terrain conditions. Ride slowly. Excessive speed and reckless driving can kill.

Make sure you read and understand the content of this operator's guide to become completely familiar with the controls and operation of the snowmobile before embarking on your first trip or taking on a passenger(s). If you have not had the opportunity to do so, practice driving solo in a suitable traffic-free area to become accustomed to the feel and response of each control.

It is very important to inform any operator, regardless of his experience, of the handling characteristics of this snowmobile. The snowmobile configuration, such as ski stance, ski type, suspension type, track length, width and type vary from a model to another. The snowmobile handling is greatly influenced by these characteristics.

## Track Propulsion System

Your snowmobile features a track propulsion system. The track grips on the snow-covered surface and pushes the snowmobile in the opposite direction of the force applied on the surface. Stay away from the track. Personal injury will result if contact is made with the revolving track.

**⚠ WARNING**

**Never stand behind or near a rotating track. Debris could be projected causing severe injuries.**

The grip of the track will vary depending on the surface conditions. The grip may be reduced on hard-pack snow or ice. Reduce your speed and allow more space to turn. Refer to the *TRACTION ENHANCING PRODUCTS* subsection of this guide to learn how to balance the grip of the ski vs the grip of the track. If the front and rear of the snowmobile are out of balance due to an incorrect combination of traction enhancing products, the snowmobile may tend to oversteer or understeer, which could lead to a loss of control.

## Steering

Skis are used to steer the snowmobile through the handlebar. The performance to steer will vary depending of the grip of the skis on the surface. Steering control ability may be reduced on hard-pack snow, ice or roads. Reduce speed and allow more space to turn. Refer to the *TRACTION ENHANCING PRODUCTS* subsection of this guide to learn how to balance the grip of the ski versus the grip of the track. If

the front and rear of the snowmobile are out of balance due to an incorrect combination of traction enhancing products, the snowmobile may tend to oversteer or understeer, which could lead to a loss of control.

Riding with a passenger or when carrying loads, the steering control will also be reduced. Reduce speed and allow more space to turn.

## Tether Cord

Always attach tether cord eyelet to clothing before starting the engine to help ensure the engine stops should the operator fall off.

After riding, always remove the tether cord from the engine cut-off switch to avoid unauthorized use by children or others and to prevent starting in a closed environment (ex: garage).

## Braking

Braking performances may vary suddenly under certain conditions. Always remember that the snowmobile braking distance may be affected when riding with a passenger and when loaded with cargo at the rear. Never jam the brake and lock the track. Be sure to use restraint in braking to keep from blocking the track in order to avoid surprises that could lead to a loss of control.

Using studs on the track will give you better braking capacity on packed snow or ice but will have no noticeable effect on soft snow. Refer to *Enhancing Traction Control Products* subsection for track studding application.

## Parking Brake

Always engage parking brake before starting the engine. Parking brake should be used whenever snowmobile is parked.

Make sure parking brake is fully disengaged before operating the snowmobile. When you ride the vehicle, brake pads that are caused to drag by a continuous pressure on the lever may cause damage to the brake system and cause loss of braking capacity or fire.

## Programmable D.E.S.S. Key

The Programmable D. E. S. S. Key can be programmed to limit the speed of the snowmobile and the engine torque. Enabling first time users and less experienced operators to learn how to operate while gaining the necessary confidence and control.

Visit your BRP authorized dealer to see if this accessory is available for your model.

## Carrying Loads

Carrying loads affects the vehicle handling, stability and braking distance. Appropriate loading and weight distribution are therefore important.

When carrying loads it is very important to follow the recommendations:

- Never exceed the maximum cargo capacity. Refer to *Safety Information on the Vehicle* or *Technical Specifications* subsections for the applicable cargo load capacity of your snowmobile.
- Always adjust the suspensions according to the cargo load. Refer to *Tune Your Ride* subsection for more details.
- Never carry a load unless it is properly secured using a BRP LinQ certified accessory. Compatible accessories which are not BRP certified may not be considered as fit for this purpose.
- Always reduce your speed, turn gradually and allow longer braking distance when carrying loads.

**⚠ WARNING**

**Failure to follow these recommendations when carrying or towing loads could lead to a loss of control and possibly in a tip over.**

## Towing Loads

Towing loads affects the vehicle handling, stability and braking distance. Appropriate loading and weight distribution are therefore important.

When towing a load it is very important to follow the recommendations:

- Always use a rigid tow bar to tow a cargo carrier or an accessory.
- Never tow a load using a rope. Using a rope would result in a collision between the load and the snowmobile and possibly in a tip over in case of a rapid deceleration or on a downward slope.
- Never tow a load by attaching it directly to the bumper. Use only the hitch to tow a load. Make sure that the cargo carrier hitch is compatible with the one on the vehicle. Use security chains or cables to secure the cargo carrier with the vehicle. Avoid excessive slack in the chains or cables, it could break and snap back.
- Never exceed the vehicle maximum tow capacity. Refer to *Safety Information on the Vehicle* or *Technical Specifications* subsections for the applicable towing capacity of your snowmobile.
- Never exceed the tongue weight capacity, if applicable.
- Always make sure load is evenly distributed and safely secured on the cargo carrier. Make sure there is at least some weight on the tongue, if applicable.

– Always adjust the suspensions according to the weight on the tongue, if applicable. Refer to *Tune Your Ride* subsection for more details.
– Reduce your speed and turn gradually. Avoid hills and rough terrain. Riding this vehicle with a cargo carrier substantially increases the risk of toppling, especially on inclined slopes. Never attempt steep hills.
– Allow more distance for braking, especially on inclined surfaces and when a passenger is on board. Be careful not to skid or slide.
– Use caution when disconnecting a loaded cargo carrier; its load may topple on you or others.

**⚠ WARNING**

**Failure to follow these recommendations when carrying or towing loads could lead to a loss of control and possibly in a tip over.**

On vehicle equipped with a gearbox, always put the shift lever to L (low range) when towing a cargo carrier.

Any towed accessory should have reflectors on both sides and at the rear.

Check country transport regulations for brake light(s) requirements.

## Towing Another Snowmobile

If a snowmobile is disabled and must be towed, in an emergency situation only, a rope can be used

– Remove the drive belt. Refer to *Maintenance Procedures* for more details.
– Attach the rope to the ski legs (spindles), **not** to the skis. If the ski legs are not accessible, attach the rope to the bumper.
– Have someone sit on the towed snowmobile to steer and activate the brake.
– Tow at low speed with extra caution.

***NOTICE***

**Always remove the drive belt of the snowmobile that is to be towed to prevent damage to its belt and drive system.**

In some areas, it may be illegal to do so. Check with state or local authorities.

## Accessories and Modifications

Never remove any original equipment from your snowmobile. Each vehicle has many built in safety features. Such features include various guards and consoles, plus reflective materials and safety labels.

Do not make unauthorized modifications, or use attachments or accessories that are not approved by BRP. Since these changes have not been tested by BRP, they may increase the risk of crashes or injuries, and they can make the vehicle illegal.

Also, accessories are designed for specific applicable models only. It is not recommended for units other than the one (those) for which it was sold.

Accessory passenger seats approved by BRP and conforming to SSCC standards may be available for certain models. If such a seat is used, you must follow the guidelines and recommendations regarding a passenger in this guide.

Know your technical limits when installing a BRP approved accessory and, when in doubt, have your OEM accessories installed by an authorized BRP snowmobile dealer.

For more information about the use of BRP accessories visit this web site https://instructions.brp.com and search for the appropriate instruction sheet that may include important safety information.

## Traction Enhancing Products

**NOTE:**
This section is applicable to all snowmobile models that are either equipped with a:

– Factory installed track approved by BRP for special studs installation.
– Factory pre-studded track.

or that can received one of these tracks.

Always refer to your authorized BRP snowmobile dealer to learn more on traction enhancing products and applicability on your snowmobile.

Using traction enhancing products such as, adjustable or more aggressive ski carbide runners and / or track studs on your snowmobile will change its behavior, particularly in terms of maneuverability, acceleration, and braking.

Using traction enhancing products gives a better grip on hard packed snow and ice, but has no noticeable effect in deep snow. For this reason, driving a snowmobile equipped with traction enhancing products requires a certain adaptation period. If your snowmobile is equipped

with traction enhancing products, be sure to take plenty of time to get used to the way it handles when turning, accelerating, and braking.

The use of track studs can increase the load and the stress on certain snowmobile components, as well as the vibration level. This can cause premature wear on parts such as belt, brake linings, bearings, chain, chain sprockets, and shorten track life.

Track studs can also cause serious damage to your snowmobile if it is not equipped with the appropriate tunnel protectors.

Check local regulations concerning the use of traction enhancing products on snowmobiles.

Studding an unapproved track or using unapproved studs increase the risk of the track tearing or severing

Installing track studs and tunnel protector(s) requires technical knowledge. To ensure safe and proper installation, BRP recommends to have the studs installed by your dealer.

For maintenance and replacement refer to *Track* in *Maintenance Procedures*.

***Maneuverability***

Using traction enhancing products such as, more aggressive ski carbide runners and/or studs makes the snowmobile grip the ground better at both the front and at the rear. The use of carbide runners is therefore required to give the skis a better grip, so that the front and rear of the snowmobile are in balance. While off-the-shelf carbide ski runners are adequate, they don't necessarily give you optimal control, since that depends on your personal preferences, your riding style, and how your suspension is adjusted.

**⚠ WARNING**

**If the front and rear of the snowmobile are out of balance due to an incorrect combination of traction enhancing products, the snowmobile may tend to oversteer or understeer, which could lead to a loss of control.**

## Oversteering

In certain conditions, using more aggressive ski carbide runners without studs on the rear track could make the snowmobile prone to oversteering, see illustration.

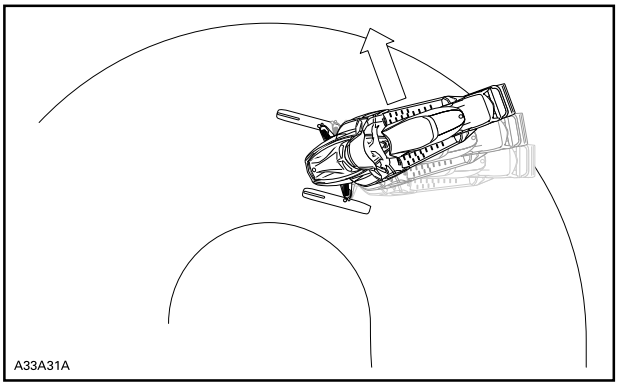


***OVERSTEERING***

## Understeering

In certain conditions, the use of studs on the track could make the snowmobile prone to understeering if the skis are not equipped with more aggressive ski carbide runners, see illustration.

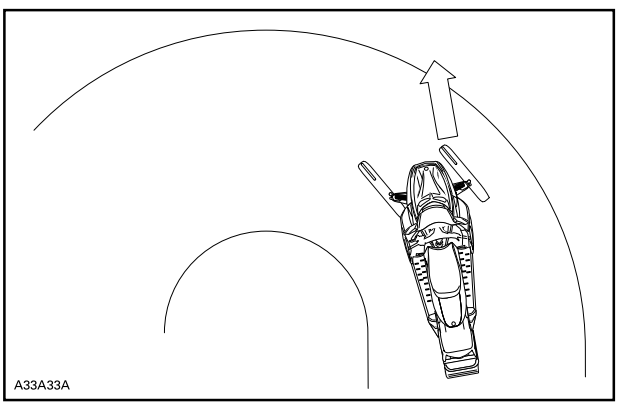


***UNDERSTEERING***

## Controlled Driving

A balanced combination of carbide ski runners and studs on the track ensures adequate control and better handling, see illustration.

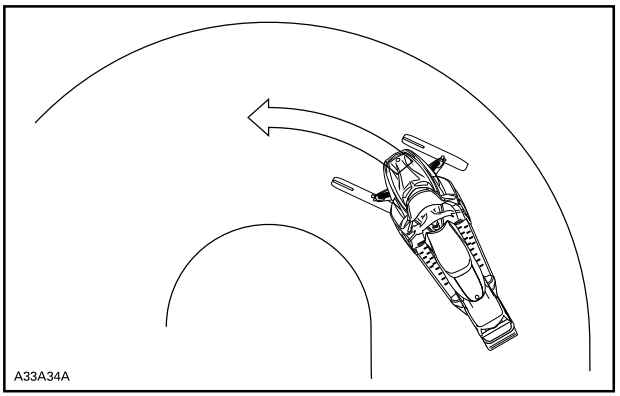


***CONTROLLED DRIVING***

### *Acceleration*

Using studs on the track will allow your sled to accelerate better on packed snow and ice but will have no noticeable effect on soft snow. This can cause sudden variations in traction under certain conditions.

Always go easy on the throttle and never try to spin the track to make the rear of the snowmobile skid. This could cause debris or ice to be thrown violently backwards, possibly injuring others nearby or on snowmobiles behind you.

### *Braking*

As in the case of acceleration, using studs on the track will give you better braking capacity on packed snow or ice but will have no noticeable effect on soft snow. Braking may thus vary suddenly under certain conditions. Be sure to use restraint in braking to keep from blocking the track in order to avoid surprises that could lead to a loss of control.

## Rider Position (Forward Operation)

Your riding position and balance are the two basic principles of making your snowmobile go where you want it to. When turning on the side of a hill, you and your passenger must be ready to shift body weight to help it turn in the desired direction. Operator and passenger must never attempt this maneuvering by placing feet outside of the vehicle. Experience will teach you how much lean to put into turns at different speeds and how much you will have to lean into a slope to maintain proper balance.

Generally, the riding position for best balance and control is sitting. However, the posting, kneeling or standing positions are also used under certain conditions.

**⚠ WARNING**

**Do not attempt any maneuvers if they are beyond your abilities.**

### *Sitting*

Feet on the running boards, body midway back on seat is an ideal position when operating the snowmobile over familiar, smooth terrain. Knees and hips should remain flexible to absorb shocks.



### *Posting*

A semi-sitting position with the body off the seat and the feet under the body in a sort of squatting posture, thus allowing the legs to absorb the shocks when traveling over uneven terrain. Avoid abrupt stops.



***Kneeling***

This position is achieved by placing one foot firmly on the running board and the opposite knee on the seat. Avoid abrupt stops.



***Standing***

Place both feet on the running boards. Knees should be flexed to absorb the shock from surface bumps. This is an effective position to see better and to shift weight as conditions dictate. Avoid abrupt stop.



## Rider Position (Reverse Operation)

When operating in reverse:

– Ensure the path behind is clear of obstacles or bystanders before proceeding in reverse.
– BRP recommends sitting on your snowmobile when operating in reverse.
– Avoid standing up. Your weight could shift forward against throttle lever while operating in reverse, causing an unexpected acceleration. Unexpected acceleration when snowmobile operates in reverse can cause a loss of control.

Fast reverse while turning, could result in loss of stability and control.

## Riding with Passenger(s)

This vehicle is designed for one (1) operator and as many passengers as there are seats with straps or handholds installed on the vehicle conforming to SSCC standards. Passenger must only sit on designated passenger seat.

**⚠ WARNING**

**– Never carry a passenger on a seat not approved by BRP.**
**– Never allow anyone to sit between the handlebar and the operator.**

Even when a passenger is allowed, this person must be physically fit for snowmobiling.

Any passenger must always be able to firmly lay his feet on the footrests and keep his hands on the handholds or seat strap when seated. Respecting those physical criteria is important to ensure that the passenger is stable and to reduce the risks of ejection. Falls can result in severe injury or death.

The operator has a responsibility to ensure the safety of his passenger and should inform the passenger about snowmobiling basics.

Before riding the vehicle, adjust suspension according to weight. Refer to *Tune Your Ride* subsection for more details.

Ask your passenger to inform you to slowdown or stop immediately if he feels uncomfortable or insecure during the ride.

When going over bumps, riders(s) may raise their body slightly off the seat to absorb the shocks with their legs.

An unforeseen bump can leave you passenger-less. Remind your passenger to lean into the turn with you, without causing the vehicle to topple. Be extremely careful, go more slowly and check the passenger frequently. Keep a watchful eye on your passenger while riding.

Braking ability and steering control are reduced when riding with a passenger. Decrease speed and allow extra space to maneuver.

## Riding Alone

Venturing out alone with your snowmobile could also be hazardous. You could run out of fuel, have an accident, or damage your snowmobile. Remember, your snowmobile is capable of traveling further in half an hour than you may be able to walk in a day. Use the “buddy system”. Always ride with a friend or member of your snowmobile club. Even then, tell someone where you are going and the approximate time you plan to return.

## Riding in a Group

Before starting out, designate a “trail boss” to lead the party and another person to follow-up at the end of the party. Ensure that all members of the party are aware of the proposed route and destination. When riding with others, limit your abilities to the experience of others. Never overtake the trail boss or, for that matter, any other snowmobile. Use down-the-line hand signals to indicate hazards or intent of direction change. It’s important to keep a safe distance between each snowmobile but each one behind the leader should know the position of the machine ahead.

***Hand Signals***

Every snowmobiler should relay any signal to the ones behind.

| | |
|---|---|
| **STOP**<br>Raise either hand straight above your head.<br>  | **LEFT TURN**<br>Extend your left hand straight out in the proper direction.<br> 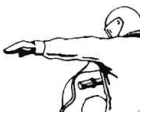 |
| **RIGHT TURN**<br>Extend the left arm and raise the hand to a vertical position so it forms a right angle at the elbow.<br>  | **SLOWING DOWN**<br>Left hand extended out and down from the side of the body with downward flapping motion of hand to signal warning or caution.<br>  |

| | |
|---|---|
| **FOLLOWING SNOWMO BILES** Arm raised, elbow bent with thumb pointing backward, in hitch-hicking motion move arm forward to backward over your shoulder.  | **ONCOMING SNOWMO BILES** Left arm raised at shoulder height, elbow bent and forearm verticl, wrist bent, move arm from left to right over head pointing to right side of trail.  |
| **LAST SNOWMO BILE IN LINE** Left arm raised at should height, elbow bent and forearm vertical with hand clenched in a fist.  | |

## Avoiding Collisions

Wherever riding your vehicle always be on the look-out for the unexpected. Operate defensively. Scan constantly for people, objects, conditions and upcoming vehicles. In the trail, always stay on the appropriate side - as per country regulation - to avoid collision, especially when the field of vision is reduced. E.g.: Before a hilltop and a curve. Use extra caution whenever off-trail.

Always keep a safe distance from other snowmobiles and bystanders. Tailgating another snowmobile should be avoided. If the snowmobile in front of you slows for any reason, its operator and passenger could be harmed through your neglect. Maintain a safe stopping distance between you and the snowmobile in front of you. Depending on the terrain condition, stopping may require a little more space than you think. Play it safe. Be prepared to use evasive driving.

On land or water, fog or visibility-limiting snow can form. If you must proceed into the fog or heavy snow, do so slowly with your lights on

and watch intently for hazards. If you are not sure of your way, do not proceed. Keep a safe distance behind other snowmobilers to improve visibility and reaction time.

## Riding Behaviors

Injury or death may result to the snowmobile operator, passenger or bystander if the snowmobile is used in risky conditions which are beyond the operator's, passenger's or snowmobile's capabilities or intended use.

Remember, promotional material may show risky maneuvers performed by professional riders under ideal and controlled conditions. You should never attempt any such risky maneuvers if they are beyond your level of riding ability.

Jumping can be a hazardous situation. It requires practice and should be done in a known and controlled environment. Never attempt jumping in a trail. A loss of control could lead to an impact with different elements like rock or tree, or with another snowmobile. When jumping be prepared for landing to absorb the shock. Brace yourself for the impact and your knees must be flexed to act as shock absorbers.

Also, an uneven or mined surface in the trail could be enough to kick upward the snowmobile and generate an impact or a loss of control. When “gunning” the throttle, the vehicle digs into and leaves an irregular snow surface for others. So protect the other users by not spinning the track in the middle of the trail.

## Speeding

Excessive speed and reckless driving can be fatal. Always adjust your speed according to snow conditions and circumstances. In many cases, you cannot react or respond quickly enough to the unexpected. Always ride at a speed which is suitable to the trail, weather conditions and your own ability. Know your local rules. Speed limit may be in effect and meant to be observed.

## Moving Parts

Stay away from the track. Personal injury will result if contact is made with the rotating track.

To prevent serious injury to individuals near the snowmobile:

– Never stand behind or near a moving track
– Always use a wide-base snowmobile stand with a rear deflector panel if it is necessary to rotate track
– When the track is raised off the ground, only run it at the lowest possible speed. Centrifugal force could cause debris, damaged or

loose studs, pieces of torn track, or an entire severed track to be violently thrown backwards out of the tunnel with tremendous force
– Never operate the engine without the belt guard securely installed
– Never operate the vehicle without the brake disk guard securely installed
– Never operate the vehicle with the side panels opened, or the hood removed

## Know Terrain and Riding Variations

### *Groomed Trail*

On a maintained trail, sitting is the most preferred riding position. Do not race and, above all, keep to the right hand side of the trail. Be prepared for the unexpected. Observe all trail signs. Do not zigzag from one side of the trail to the other.

### *Ungroomed Trail*

Unless there has been a fresh snowfall you can expect “washboard” and snowdrift conditions. Taken at excessive speeds, such conditions can be physically harmful. Slow down. Hold on the handlebar and assume a posting position. Feet should be under the body assuming a crouched position to absorb any jarring effect. On longer stretches of “washboard” trails, the kneeling position of one knee on the seat can be adopted. This provides a certain amount of comfort, while at the same time keeps the body loose and capable of vehicle control. Beware of hidden rocks or tree stumps partially hidden by a recent snowfall.

### *Deep Snow*

In deep “powder” snow, your vehicle could begin to “bog” down. If this occurs, turn in as wide an arc as possible and look for a firmer base. If you do get “bogged”, and it happens to everyone, do not spin your track as this makes the vehicle sink deeper. Instead, turn the engine off, get off and move the back of the vehicle onto new snow. Then tramp a clear path ahead of the vehicle. A few feet will generally suffice. Restart the engine. Assume the standing position and rock the vehicle gently as you steadily and slowly apply the throttle. Depending on whether the front or rear end of the vehicle is sinking, your feet should be placed on the opposing end of the running boards. Never place foreign material beneath the track for support. Do not allow anyone to stand in front of, or to the rear of, the snowmobile with the engine running. Stay away from the track. Personal injury will result if contact is made with the revolving track.

### *Frozen Water*

Traveling frozen lakes and rivers can be fatal. Avoid waterways. If you are in an unfamiliar area, ask the local authorities or residents about

the ice condition, inlets, outlets, springs, fast moving currents or other hazards. Never attempt to operate your snowmobile on ice that may be too weak to support you and the vehicle. Operating a snowmobile on ice or icy surfaces can be very dangerous if you do not observe certain precautions. The very nature of ice is foreign to good control of a snowmobile or any vehicle. Traction for starting, turning or stopping is much less than that on snow. Thus, these distances can be multiplied manyfold. Steering is minimal, and uncontrolled spins are an ever present danger. When operating on ice, drive slowly with caution. Allow yourself plenty of room for stopping and turning.

### *Slush*

Slush should be avoided at all times. Always check for slush before starting across any lake or river. If dark spots appear in your tracks, get off the ice immediately. Ice and water can be thrown rearward into the path of a following snowmobile. Getting a vehicle out of a slush area is strenuous and in some cases, impossible.

### *Uphill*

There are two types of hills you can encounter — the open hill on which there are few trees, cliffs or other obstacles, and a hill that can only be climbed directly. On an open hill, the approach is to climb it by side hilling or slaloming. Approach at an angle. Adopt a standing position with both feet on the same running board. Keep your weight on the uphill side at all times. Maintain a steady, safe speed. Continue as far as you can in this direction, then switch to an opposite hill angle and riding position.

A direct climb could present problems. Choose the standing position, accelerate before you start the climb and then reduce throttle pressure to prevent track slippage.

In either case, vehicle speed should be as fast as the incline demands. Always slow down as you reach the crest. If you cannot proceed further, don't spin your track. Apply the parking brake, turn the engine off, free the skis by pulling them out and downhill, place the rear of the snowmobile uphill, restart the engine, release the parking brake and ease it out with slow even throttle pressure. Position yourself to avoid tipping over, then descend.

### *Downhill*

Downhill driving requires that you have full control of your vehicle at all times. On steeper hills, keep your center of gravity low and both hands on the handlebar. Maintain slight throttle pressure and allow the machine to run downhill with the engine operating. If a higher than safe speed is reached, slow down by braking but apply the brake with frequent light pressure. Never jam the brake and lock the track.

### *Side Hill*

When crossing a side hill or traversing up or downhill, certain procedures must be followed. All riders should lean towards the slope as required for stability. The preferred operating positions are the standing position, with both feet on the running board that is facing uphill. Be prepared to shift your weight quickly as needed. Side hills and steep slopes are not recommended for a beginner or a novice snowmobiler.

### *Avalanche Hazard*

When riding on mountainous terrain, you should be aware of the risk of avalanches. Avalanches vary in size and shapes and generally occur in steep terrain and on unstable snow.

New snow, animals, people, wind and snowmobiles can all trigger an avalanche. Avoid high marking or traversing steep terrain when avalanche conditions are possible. When in unstable snow conditions, travel should be restricted to lower angle slopes. Wind formed cornices should be avoided. Staying off unstable conditions is the key to safe mountain riding. Probably most important is to be aware of the conditions and dangers on a daily basis when in the mountains. Check local avalanche forecasts and threats each day before heading out to ride and heed forecasters advice.

You should always carry a snow shovel, probe and avalanche beacon while riding on mountains.

### *Bright Sunshine*

Bright sunny days can considerably reduce your vision. The glare from sun and snow may blind you to the extent that you cannot easily distinguish ravines, ditches or other obstacles. Goggles with colored lenses should always be worn under these conditions.

### *Night Rides*

The amount of natural and artificial light at a given time can affect your ability to see or to be seen. Be extra cautious. Drive at speeds that will allow you to stop in time when you see an unknown or dangerous object ahead. Stay on established trails and never operate in unfamiliar territory. Be sure both headlights and taillight are working and clean.

### *Unfamiliar Territory*

Whenever you enter an area that is new to you, drive with extreme caution. There may be obstructions hidden beneath the snow. Go slow enough to recognize potential hazards such as fences or fence posts, brooks crossing your path, rocks, sudden dips, guy wires and countless other obstacles which could result in a termination of your snowmobile ride.

Driving off established trails and in the woods requires reduced speed and increased vigilance. Driving too fast in an area can make even minor obstacles very hazardous. Even hitting a small rock or stump could throw your snowmobile out of control and cause injury to its riders. Even when following existing tracks, be cautious. Travel at a speed so you can see what is around the next bend or over the top of the hill.

### *Hidden Wires*

Always be on the lookout for hidden wires, especially in areas that may have been farmed at one time or another. Too many accidents have been caused by running into wires in the fields, guy wires next to poles and roads, and into chains and wires used as road closures. Slow speeds are a must.

### *Riding Uneven Surfaces*

Unplanned jumps of snowdrifts, snowplow ridges, culverts, indistinguishable objects or sudden drop in the trail can be dangerous. You can avoid them by wearing the proper color lenses or face shields and by operating at a lower speed.

A good way to help seeing these terrain variations is to wear the proper color lenses or face shields and by operating at a lower speed. Crouch (stand) towards the rear of the vehicle and keep the skis up and straight ahead. Apply partial throttle and brace yourself for the impact. Knees must be flexed to act as shock absorbers.

### *Road Crossing*

Your snowmobile is not designed to operate or turn on pavement of public streets, roads or highways. Avoid road traveling. If you must do so, and it is permitted, reduce speed and stay on the edge of the way where you can find snow to help providing capabilities to maintain directional control.

As snowmobile trails often cross roadways it is important for riders to know the proper crossing procedures. When approaching a roadway, signal to others that you are stopping at the intersection and slowly come to a complete stop back from the road's edge. In some cases, you will be approaching the road from a ditch or snowbank. Choose a place where you know you can climb without difficulty. Stop completely at the top of the bank and wait for all traffic to clear. Then, look carefully in both directions before crossing at a 90° angle. If needed, assume a standing position to look both ways. Be wary of parked vehicles. When you are certain that the road is clear proceed straight across the intersection without hesitation. Each rider needs to come to a complete stop, look both ways and then proceed when the roadways is clear of oncoming traffic.

***Railroad Crossing***

Never ride on railroad tracks. It is illegal. Railroad tracks and railroad rights-of-way are private property. A snowmobile is no match for a train. Before crossing a railroad track, stop, look and listen.

## Respect of the Wildlife

Wildlife compliments your snowmobiling day. Snowmobile tracks provide firm ground over which animals can travel from area to area. Do not violate this privilege by chasing or harassing wildlife. Fatigue and exhaustion can lead to animal's death. Avoid areas posted for the protection or feeding of wildlife. If you happen to be fortunate enough to see an animal, stop your snowmobile and observe quietly.

## Carbon Monoxide Poisoning

All engine exhaust contains carbon monoxide, a deadly gas. Breathing carbon monoxide can cause headaches, dizziness, drowsiness, nausea, confusion and eventually death.

Carbon monoxide is a colorless, odorless, tasteless gas that may be present even if you do not see or smell any engine exhaust. Deadly levels of carbon monoxide can collect rapidly, and you can quickly be overcome and unable to save yourself. Also, deadly levels of carbon monoxide can linger for hours or days in enclosed or poorly ventilated areas.

If you experience any symptoms of carbon monoxide poisoning, leave the area immediately, get fresh air and seek medical treatment.

To prevent serious injury or death from carbon monoxide:

– Never run the vehicle in poorly ventilated or partially enclosed areas such as garages, carports or barns. Even if you try to ventilate engine exhaust with fans or open windows and doors, carbon monoxide can rapidly reach dangerous levels.
– Never run the vehicle outdoors where engine exhaust can be drawn into a building through openings such as windows and doors.
– Never stand next to the vehicle while the engine is running. A person standing next to the vehicle when the engine is running may inhale high concentrations of exhaust fumes.

After riding, always remove the tether cord from the engine cut-off switch to avoid unauthorized use by children or others and to prevent starting in a closed environment (ex: garage).

## Gasoline Fires and Other Hazards

Gasoline is extremely flammable and highly explosive. Fuel vapors can spread and be ignited by a spark or flame many feet away from the engine. To reduce the risk of fire or explosion, follow these instructions:

- Use only an approved gasoline container to store fuel.
- Strictly adhere to instructions in *Vehicle Fueling Procedure*.
- Never start or operate the engine if the fuel cap is not properly installed.
- Use only a BRP approved LinQ fuel caddy to carry extra fuel on the vehicle. It should be properly installed and secured.

Gasoline is poisonous and can cause injury or death.

- Never siphon gasoline by mouth.
- If you swallow gasoline, get any in your eye or inhale gasoline vapor, visit your doctor immediately.
- If gasoline spills on you, wash with soap and water and change your clothes.

## Burns from Hot Parts

Certain components may become hot during operation. Avoid contact during and shortly after operation to avoid burns.

# PRACTICE EXERCISES

Practice alone the following exercises after having done the entire Pre-ride inspection. Always start and stop the engine according to the instructions in *ENGINE STARTING PROCEDURE* and *SHUTTING OFF THE ENGINE* in *BASIC PROCEDURES*. Don't forget to attach the tether cord to your jacket.

## Where to Practice Exercises

Find a suitable area to practice the exercises. Ensure the area meet the following requirements:

– No traffic
– No obstacles
– Hard packed snow
– Ample space to maneuver.

## Exercises to Practice

Practice alone the following exercises after having done the entire Pre-ride inspection. Always start and stop the engine according to the instructions in *ENGINE STARTING PROCEDURE* and *SHUTTING OFF THE ENGINE* in *BASIC PROCEDURES*. Don't forget to attach the tether cord to your jacket.

***Using the Emergency Engine Stop Switch***

Purpose: Become familiar with the operation of throttle lever and to become familiar with using the engine stop switch.

Directions:

– With the parking brake engaged, start the engine and let idle until it reaches the operation temperature.
– Use the engine stop switch to shut the engine off. Press the switch with your right thumb while keeping your hand on the handgrip.
– Restart the engine and repeat the exercise. No idle time is required.

Tips for additional practice:

– Press the emergency engine stop switch without looking at it.

***Starting, Stopping and Basic Handling***

Purpose:

– Learn throttle control and how to get the vehicle moving.
– Become familiar with low speed deceleration and braking.

If you feel like you are losing control while doing this exercise, release the throttle to stop accelerating and apply the brake as needed to slow down. You can also use the engine stop switch to cut power entirely.

Directions: At first, you will only use the throttle for a moment at a time, then release it and coast.

– Start the engine and release the parking brake lever.
– Slowly apply throttle until the vehicle starts to creep forward. As soon as you start moving release the throttle and coast, then press the brake lever to stop.
– Continue with this part of the exercise until you are comfortable with applying and releasing the throttle.

***Engine Stop While in Motion***

Purpose: Become familiar with using the emergency engine stop switch when in motion so you know how the vehicle will react if you need to use it later.

Directions:

– Partway down the straightaway, while operating at 8 km/h (5MPH), toggle the engine stop switch to OFF position and coast to a stop.
– Restart the engine and repeat the exercise. Try increasing your speed (to a maximum of 20 km/h (12MPH) before using the engine stop switch.

In an emergency, the snowmobile engine can be stopped by pressing down on the emergency engine stop switch or by pulling the tether cord cap from the engine cut-off switch, while applying brake.

***Basic Turns***

Purpose: Get comfortable turning in a controlled manner on both sides.

Directions:

– Roll in a straight line at low speed and make a wide arcing turn. Make sure there is enough space to perform the entire turn.
– Repeat right and left turns and maintain a steady speed bellow 8km/h (5MPH). Hold the throttle to maintain your low speed.
– Leaning forward and into the curve may help you to turn the handlebar more easily.

***Quick Stops***

Purpose:

– Become familiar with the vehicle braking ability.
– Learn to apply brakes with maximum efficiency.

This exercise is like what you did before, except you'll be applying the brake more firmly, working up to braking at the maximum without locking the track rotation. Always release the throttle completely for quick stops. If you apply throttle and brake at the same time, your stopping distance will be longer.

Directions:

– Start at one end of the straightaway and accelerate to 8 km/h (5MPH). Partway down the straightaway, release the throttle completely and brake quickly.
– Keep head and eyes up, keep handlebar straight, and do not release the brake until fully stopped.
– Repeat, increasing your speed and braking harder. When you feel that the rotation of the track will be stopped you need to release the pressure on the break lever. To maintain control, you need to keep the track in rotation.

***Operating in Reverse***

Purpose: Become familiar with the vehicle handling and turning radius in reverse.

Directions:

– Shift into reverse and remain seated. Refer to *SHIFTING IN REVERSE* in *BASIC PROCEDURES*.
– Check that the area behind you is clear. While looking backwards, slowly reverse and stop by releasing throttle and using the brake, just like when operating normally.
– Keep your speed low and do not back up for long distances.
– Repeat the reverse and stop in straight line until you get comfortable.
– Once you are comfortable with reversing in straight line, you can slowly reverse while turning the handle bar.

# FUELING

Fuel is flammable and explosive under certain conditions.

– Never use an open flame to check fuel level.
– Never smoke or allow flame or spark in vicinity.
– Always proceed in a well-ventilated area.

## Fueling Procedure

1. Stop engine and engage the parking brake.
2. Have operator and passenger get off the vehicle. Do not sit or lean on seat when fuel tank cap is not properly installed.
3. Unscrew slowly the fuel reservoir cap counterclockwise to stabilize pressure before removing it.

**NOTE:**
A short whistling sound is normal.

4. Insert the spout into the filler neck.
5. Pour fuel slowly so that air can escape from the tank and prevent fuel flow back. Be careful not to spill fuel.
6. Stop filling after the release of the gas pump nozzle handle and wait a moment before removing the spout. Do not retract the gas pump nozzle to put more fuel into the fuel tank. **Do not overfill.**
7. Reinstall the fuel cap and fully tighten clockwise.
8. Always wipe off any small fuel spillage from the vehicle. If a major spillage occurs, remove side panels to remove fuel vapors from engine compartment before starting.
9. Before getting on the way don't forget to disengage the parking brake.
10. Never top up the fuel tank before placing the vehicle in a warm area. As temperature increases, fuel expands and may overflow.

## VEHICLE TRANSPORTATION

Make sure that oil reservoir and fuel tank caps are properly installed.

Tilt bed trailers can easily be equipped with a winch mechanism to afford maximum safety in loading. Simple as it may seem, never drive your snowmobile onto a tilt bed trailer or any other kind of trailer or vehicle. Many serious accidents have resulted from driving up and over a trailer. Anchor your vehicle securely, front and rear, even on short hauls. Be certain all equipment is securely fastened. Cover your snowmobile when trailering to prevent road grime from causing damage.

Be certain your trailer meets state or provincial requirements. Ensure the hitch and safety chains are secure and the brake, turn indicators and clearance lights all function.

**⚠ WARNING**

**Do not tow the vehicle facing backwards. If the vehicle is towed facing backwards, the wind may cause damage to the windshield or even loss of the windshield.**

# IMPORTANT ON-PRODUCT LABELS (CANADA/UNITED STATES)

## Vehicle Safety Labels

These labels are affixed to the vehicle for the safety of the operator, passenger or bystanders.

The following labels are on your vehicle and they should be considered permanent parts of the vehicle. If missing or damaged, the decals can be replaced free of charge. Visit an authorized BRP snowmobile dealer.

**NOTE:**
In the event of any discrepancy between this guide and the vehicle, the safety labels on the vehicle have precedence over the labels in this guide.

***Shock Absorber - Warning Label***

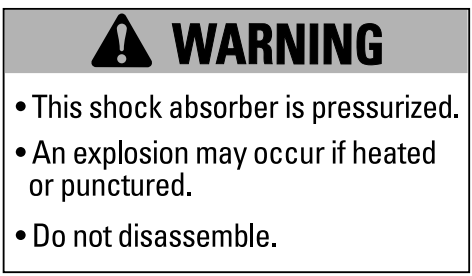


***SHOCK ABSORBERS - WARNING LABEL***

### *Pulley Guard and Drive Pulley Tightening Torque - Warning and Notice Label*

**⚠ WARNING / AVERTISSEMENT**

This guard must ALWAYS be in place when the engine is running. Beware of rotating parts, they could cause injuries or catch your clothing.

Ce protecteur doit TOUJOURS être en place lorsque le moteur tourne, les pièces en rotation peuvent provoquer des blessures ou prendre dans vos vêtements.

**NOTICE**

Drive pulley bolt recommended torque:
115-125 Nm ( 85-92 lbf-ft )

Not applying the recommended torque may result in a major failure of the drive pulley and the engine. Refer to the shop manual for the complete assembly procedure.

10898

### *PULLEY GUARD AND DRIVE PULLEY TIGHTENING TORQUE – WARNING AND NOTICE LABEL*

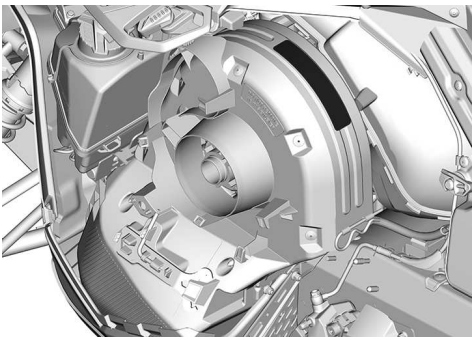

***Do Not Open When Hot - Warning Label***




***DO NOT OPEN WHEN HOT - WARNING LABEL***

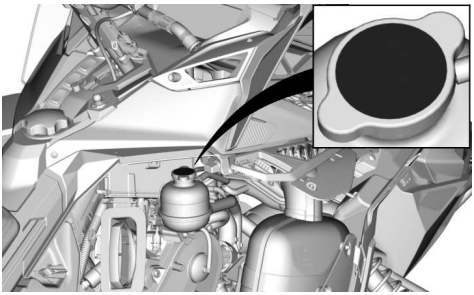

***Do Not Open When Hot - Warning Label***




***DO NOT OPEN WHEN HOT – WARNING LABEL***

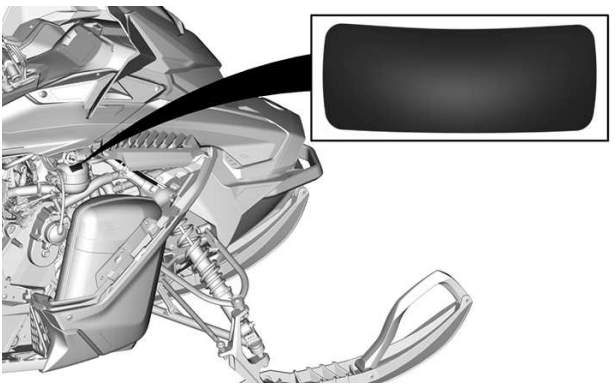

***RH SIDE SHOWN***

***Beware of Hot Parts - Caution Label***

| ⚠ CAUTION |
| --- |
| **Beware of hot parts.** |

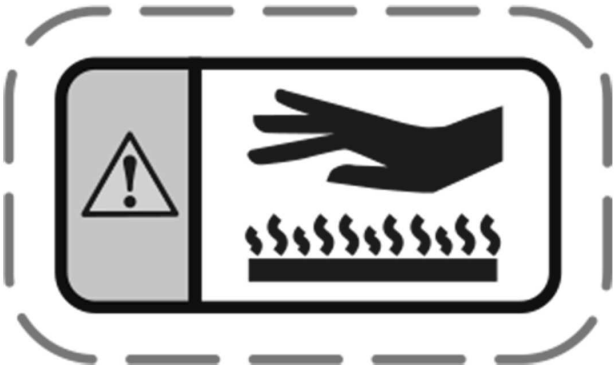

***BEWARE OF HOT PARTS - CAUTION LABEL***

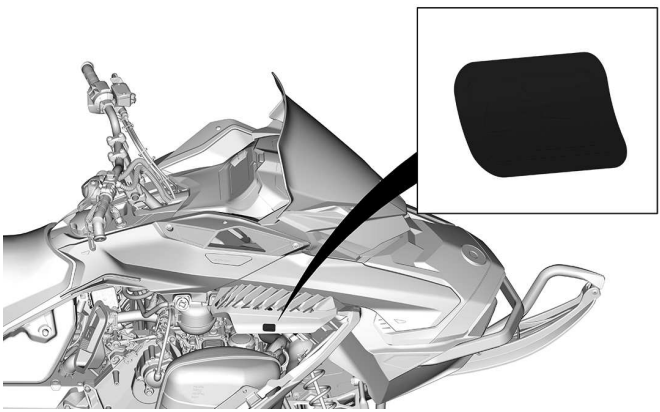

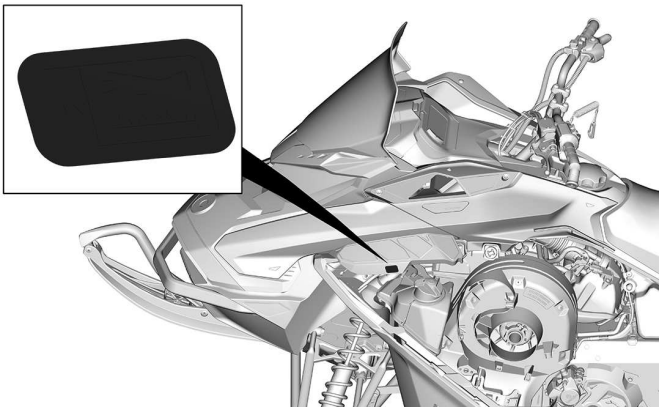

***Engine Oil Level - Caution Label***

**⚠ CAUTION**

Engine oil and certain components in the engine compartment may be hot. Direct contact may result in skin burn.

Checking engine oil level:
- Make sure the engine is at operating temperature.
- Vehicule must be level to perform verification.
- Let the engine run at idle for at least 30 seconds.
- Stop the engine and wait 30 seconds.
- Check the oil level using the dipstick.

The engine of this snowmobile has been developed and validated using the BRP XPS™ Synthetic 4-stroke oil. BRP recommends the use of its XPS™ approved lubricant or equivalent. Damages caused by oil which is not suitable for this engine may not be covered by BRP limited warranty. See operator's guide.

11020

***ENGINE OIL LEVEL – CAUTION LABEL***



***INSIDE THE LH SIDE PANEL***

***Disk Guard - Warning Label***




***DISK GUARD – WARNING LABEL***

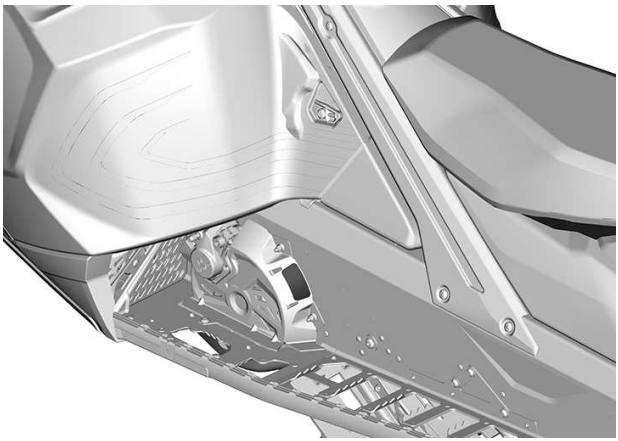

***400 mm (16 in.) Tunnel Width***

## Starting Procedure - Warning Label

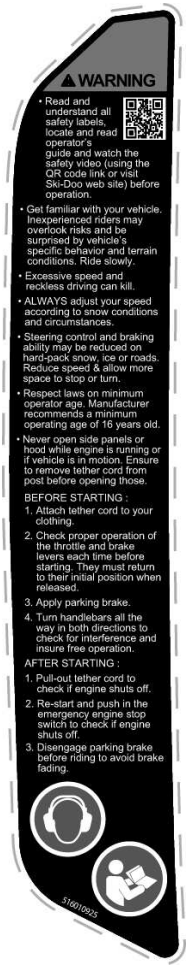


***STARTING PROCEDURE – WARNING LABEL***

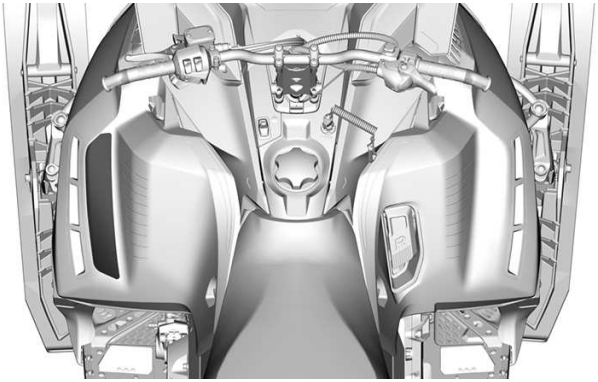

## Passenger Safety - Warning Label




***PASSENGER SAFETY - WARNING LABEL***

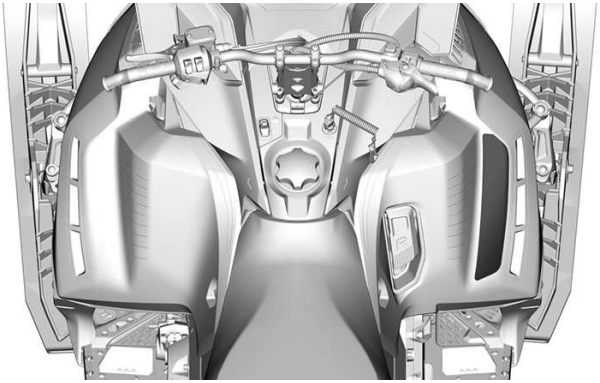

## Maximum Cargo Load and Towing Capacity-Warning Label

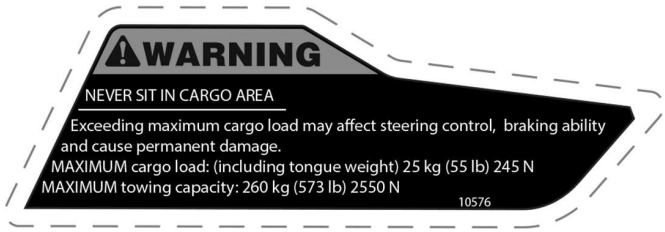


*CARGO AREA – WARNING LABEL*

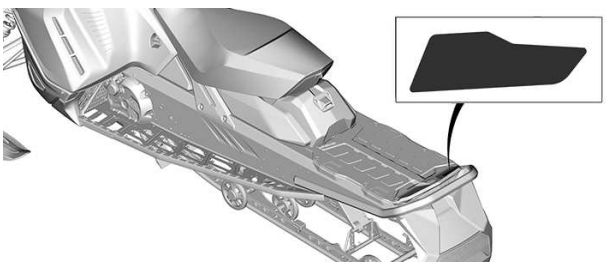

## Rotating Track - Warning Label




***ROTATING TRACK– WARNING LABEL***

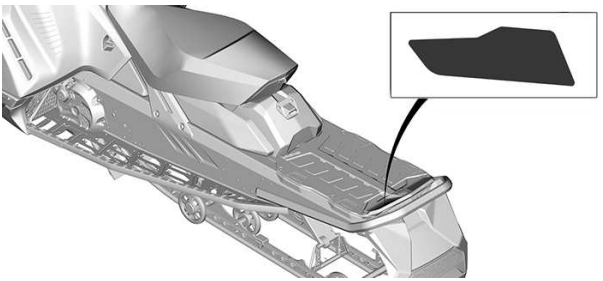

***500 and 600 mm (20 and 24 in.) Tunnel Width***

## Starting Procedure - Warning Label

**⚠ WARNING**

- Read and understand all safety labels, locate and read operator's guide and watch the safety video (using the QR code link or visit Ski-Doo web site) before operation.
- Get familiar with your vehicle. Inexperienced riders may overlook risks and be surprised by vehicle's specific behavior and terrain conditions. Ride slowly.
- Excessive speed and reckless driving can kill.
- ALWAYS adjust your speed according to snow conditions and circumstances.
- Steering control and braking ability may be reduced on hard-pack snow, ice or roads. Reduce speed & allow more space to stop or turn.
- Respect laws on minimum operator age. Manufacturer recommends a minimum operating age of 16 years old.
- Never open side panels or hood while engine is running or if vehicle is in motion. Ensure to remove tether cord from post before opening those.

BEFORE STARTING :

1. Attach tether cord to your clothing.
2. Check proper operation of the throttle and brake levers each time before starting. They must return to their initial position when released.
3. Apply parking brake.
4. Turn handlebars all the way in both directions to check for interference and insure free operation.

AFTER STARTING :

1. Pull-out tether cord to check if engine shuts off.
2. Re-start and push in the emergency engine stop switch to check if engine shuts off.
3. Disengage parking brake before riding to avoid brake fading.



516010927

***STARTING PROCEDURE – WARNING LABEL***

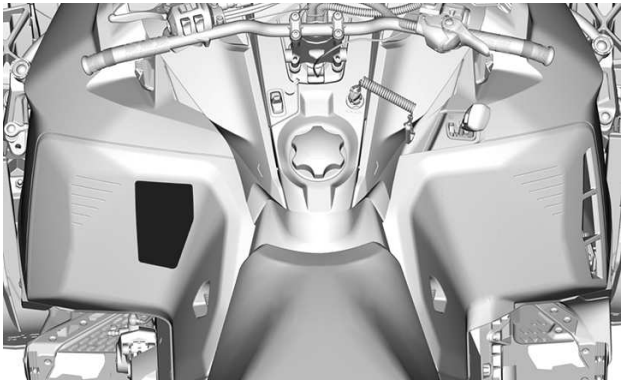

## Passenger Safety - Warning Label




***PASSENGER SAFETY – WARNING LABEL***

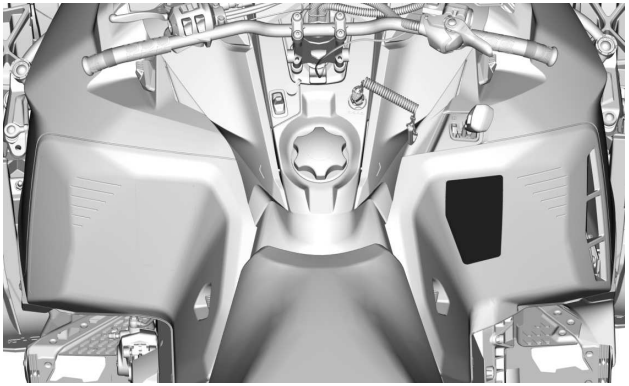

## Passenger Seat - Warning Label

**⚠WARNING**

To reduce the risk of severe injury or death.
BEFORE riding, ALWAYS make sure that the latch on each side of the seat or the accessory is fully engaged.

9941

***PASSENGER SEAT – WARNING LABEL***

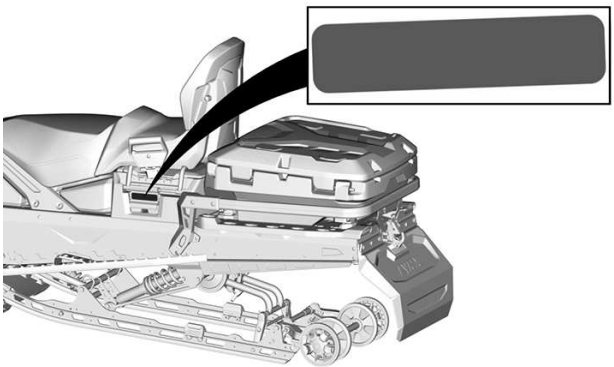

## Rear Storage Compartment - Warning Label




*REAR STORAGE COMPARTMENT – WARNING LABEL*

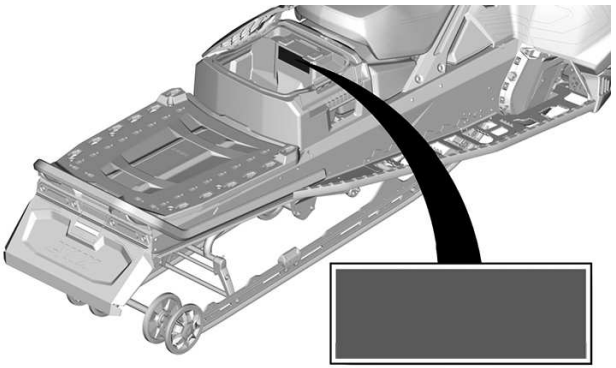

## Molded Safety Pictogram

| ⚠ WARNING |
| --- |
| **Never carry passengers on the rear storage compartment.** |

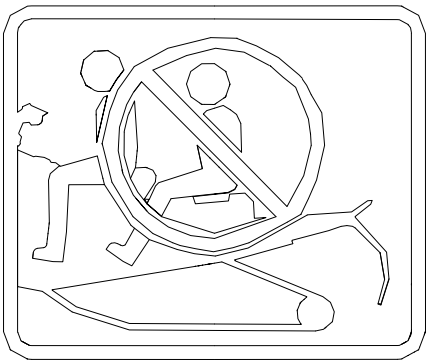

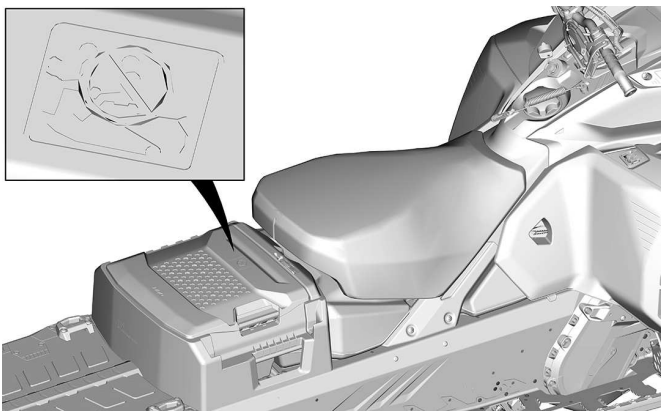

## Maximum Cargo Load and Tongue Weight Capacity — Warning Label

**⚠WARNING**

NEVER SIT IN CARGO AREA

Avoid losing control of the vehicle.

- Reduce your speed when carrying cargo.
- Always adjust suspension according to cargo load.
- MAXIMUM cargo load : 57 kg (125 lb) 556 N (including tongue weight).
- Maximum tongue weight : 16 kg (35 lb) 156 N.

9982

***MAXIMUM CARGO LOAD AND TONGUE WEIGHT CAPACITY — WARNING LABEL***

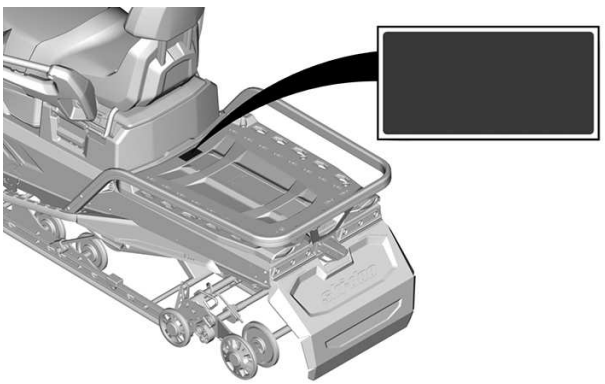

## Rotating Track - Warning Label

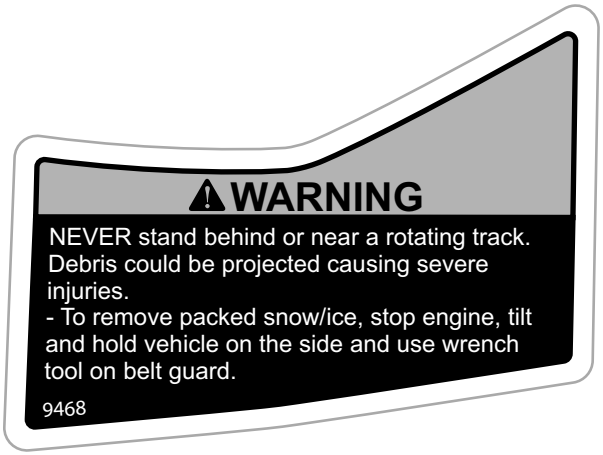


*ROTATING TRACK - WARNING LABEL*

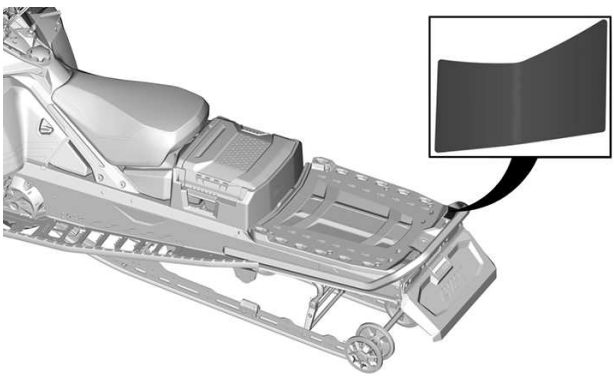

## Maximum Towing Capacity - Warning Label




***MAXIMUM SPECIFICATIONS - WARNING LABEL***

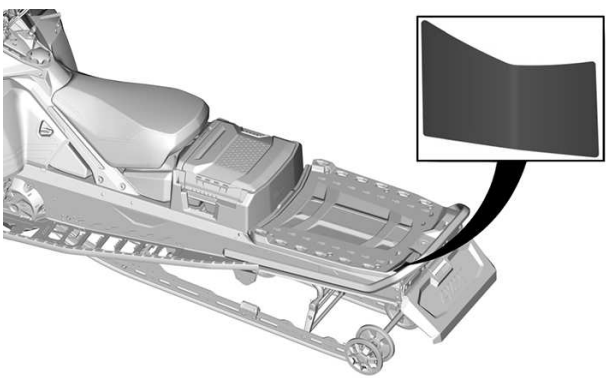

## Rear Cargo Box - Warning Label

**⚠ WARNING**

- Exceeding maximum cargo load may affect steering control, braking ability and cause permanent damage.

- For maximum cargo load specification, refer to the Operator's Guide.

- Never exceed a cargo load of 20 kg (44 lb) on the lid.

*REAR CARGO BOX (OUTSIDE) – WARNING LABEL*

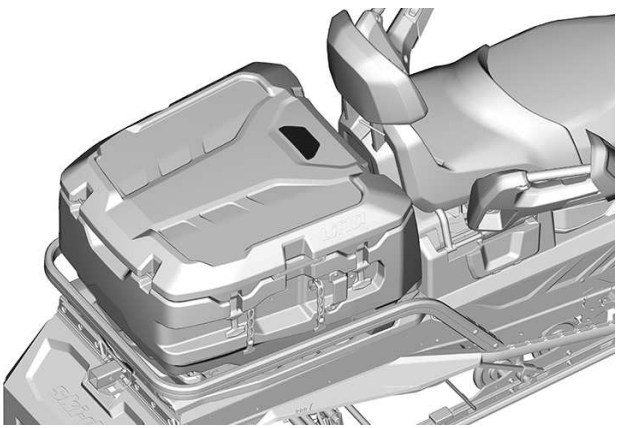

## Rear Cargo Box - Warning Label

**⚠ WARNING**

- NEVER carry a child or pet in this cargo box. The cargo box is airtight which can lead to suffocation.
- NEVER carry flammables or dangerous liquids inside the cargo box. If ignited, this can lead to an explosion and cause severe injury of death.
- NEVER exceed the cargo load capacity of your vehicle.
- For maximum cargo load specification, refer to the Operator's Guide.
- Never carry more than 20 kg (44 lb) on the lid of the box.
- Max cargo load capacity of the box = 48 kg (105 lb), including cargo load on the lid.
- Refer to the instruction sheet of this cargo box for the installation of the LinQ Anchor on the lid.

***REAR CARGO BOX (INSIDE) – WARNING LABEL***

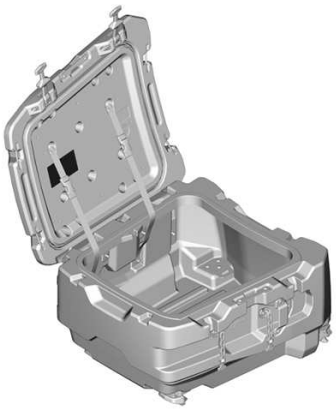

## Technical Information Labels

***Adjustment Tools Label***

– Install suspension adjustment tool first. (Illustrated red on label)
– Install pulley expander and Headlight adjustment tool second. (Illustrated blue on label)
– Refer to *Tools* in *Equipment*.

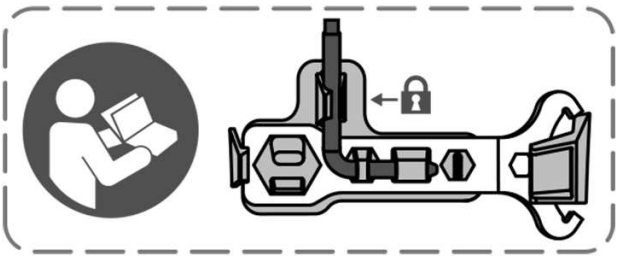

***ADJUSTMENT TOOLS***

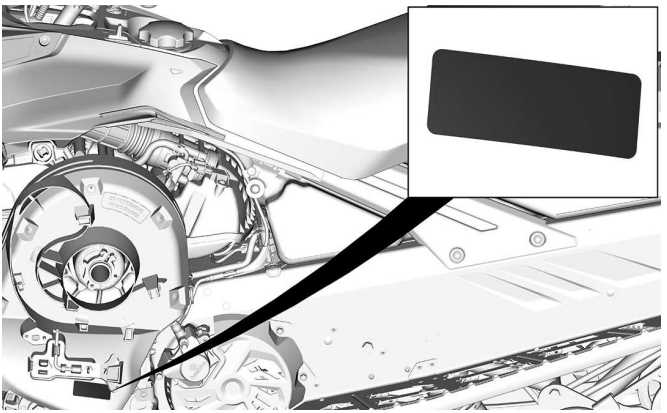

***TYPICAL***

***Recommended Fuel — Notice Label***

Refer to the *Technical Specifications* for appropriate fuel type for your vehicle engine.




***AKI (RON+MON)/2 OCTANE RATING - NOTICE LABEL***




***RON OCTANE RATING - NOTICE LABEL***

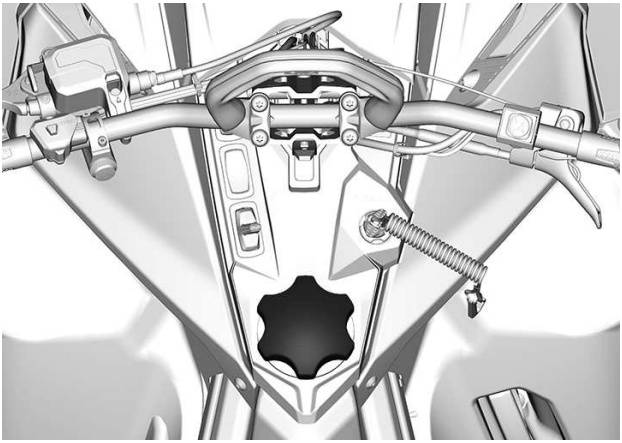

## Hang Tag(s)

***EPA Certified Hang Tag***

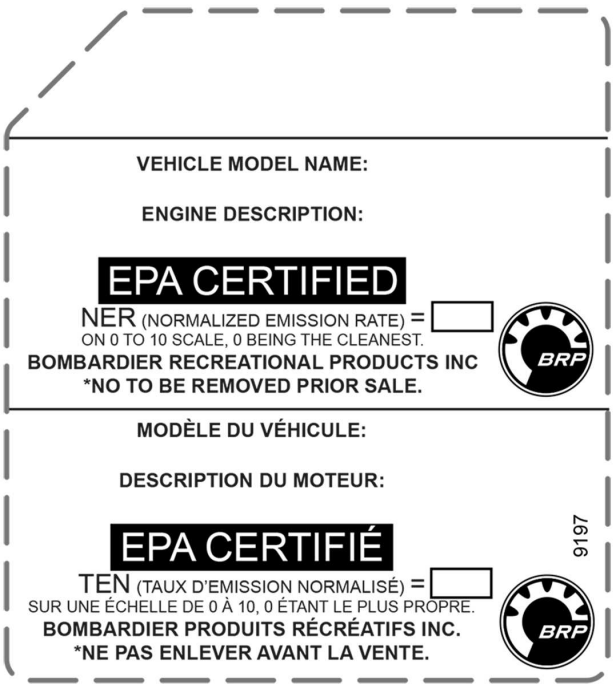


***EPA CERTIFIED HANG TAG***

***California Proposition 65 Warning***

⚠ **WARNING**. Operating, servicing and maintaining an off-road vehicle can expose you to chemicals including engine exhaust, carbon monoxide, phthalates, and lead, which are known to the State of California to cause cancer and birth defects or other reproductive harm.
To minimize exposure, avoid breathing exhaust, do not idle the engine except as necessary, service your vehicle in a well-ventilated area and wear gloves or wash your hands frequently when servicing your vehicle.

For more information go to www.P65Warnings.ca.gov/products/passenger-vehicle

704906872

# IMPORTANT ON-PRODUCT LABELS (ALL COUNTRIES EXCEPT CANADA/UNITED STATES)

## Vehicle Safety Labels

These labels are affixed to the vehicle for the safety of the operator, passenger or bystanders.

The following labels are on your vehicle and they should be considered permanent parts of the vehicle. If missing or damaged, the decals can be replaced free of charge. Visit an authorized BRP snowmobile dealer.

**NOTE:**
In the event of any discrepancy between this guide and the vehicle, the safety labels on the vehicle have precedence over the labels in this guide.

***Shock Absorber - Warning Label***

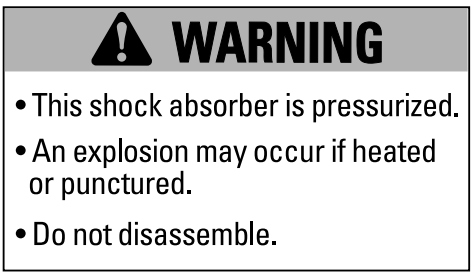


***SHOCK ABSORBERS - WARNING LABEL***

***Pulley Guard and Drive Pulley Tightening Torque - Warning and Notice Label***

**⚠ WARNING**

**This guard must ALWAYS be in place when engine is running. Beware of rotating parts, they could cause injuries or catch your clothing.**

## *NOTICE*

- **Drive pulley bolt recommended torque is 115 to 125 Nm (85 to 92 lbf-ft).**
- **Not applying the recommended torque may result in a major failure of the drive pulley and the engine.**
- **Refer to the shop manual for the complete assembly procedure.**

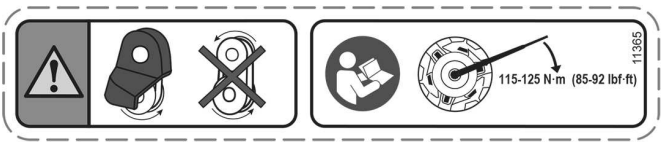


***PULLEY GUARD AND DRIVE PULLEY TIGHTENING TORQUE – WARNING AND NOTICE LABEL***

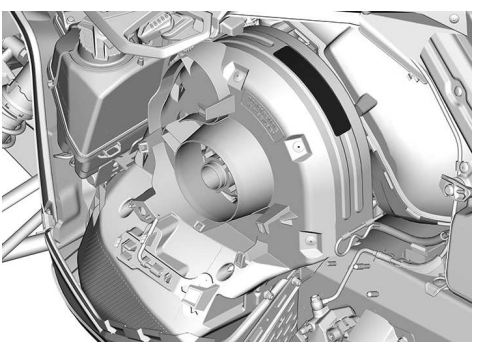

***Do Not Open When Hot - Warning Label***




***DO NOT OPEN WHEN HOT - WARNING LABEL***

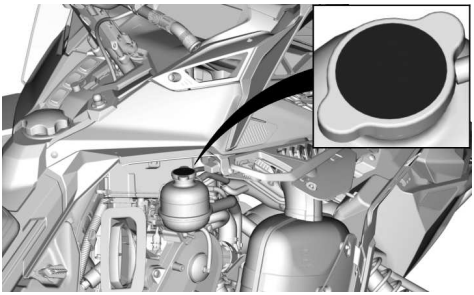

***Do Not Open When Hot - Warning Label***

| ⚠ WARNING |
| --- |
| **Do not open when hot.** |




***DO NOT OPEN WHEN HOT- WARNING LABEL***

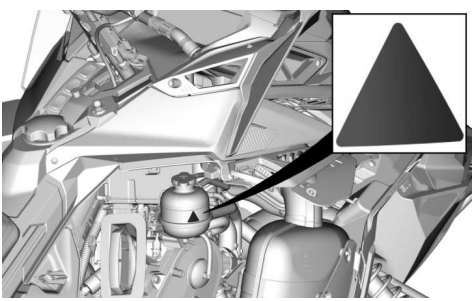

***Beware of Hot Parts - Caution Label***

| ⚠ CAUTION |
| --- |
| **Beware of hot parts.** |

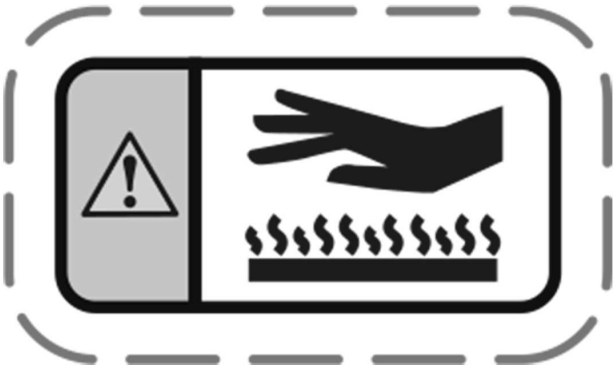

***BEWARE OF HOT PARTS - CAUTION LABEL***

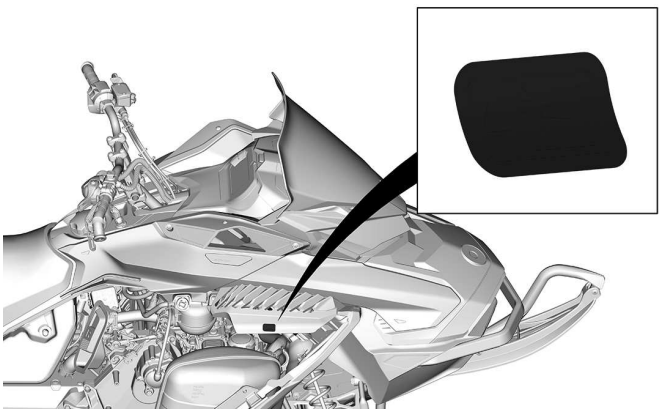

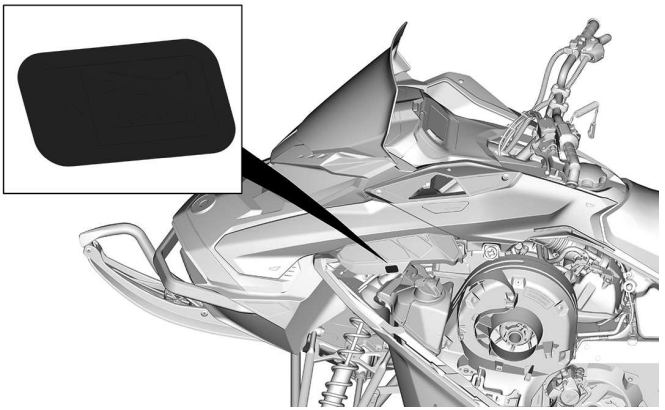

***Engine Oil Level - Caution Label***

Add Note to explain

| ⚠ CAUTION |
| --- |
| **Engine oil and Certain components in the engine compartment may be hot. Direct contact may result in skin burn.**<br>**Checking the engine oil:**<br><br>**1. Make sure the engine is at operating temperature.**<br>**2. Vehicle must be level to perform verification.**<br>**3. LLet the engine run at idle for at least 30 seconds.**<br>**4. Stop the engine and wait 30 seconds.**<br>**5. Check the oil level using the dipstick.**<br>**The engine of this snowmobile has been developed and validated using the BRP XPS™ Synthetic 4-stroke oil.**<br>**BRP Recommends the use of its XPS approved lubricant or equivalent.**<br>**Damages caused by oil which is not suitable for this engine may not be covered by BRP limited warranty.**<br>**Refer to the operator's guide for more information.** |

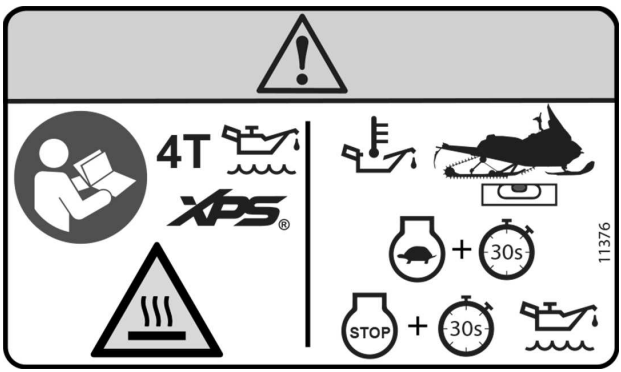


***ENGINE OIL LEVEL – CAUTION LABEL***



***INSIDE THE LH SIDE PANEL***

***Disk Guard - Warning Label***

| ⚠ WARNING |
| --- |
| **This guard must ALWAYS be in place when engine is running.** |

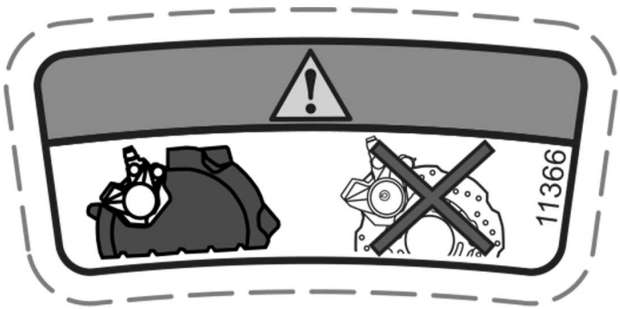


***DISK GUARD – WARNING LABEL***

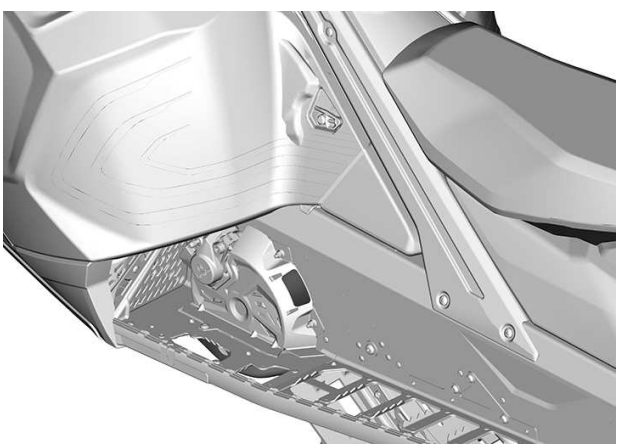

## Starting Procedure - Warning Label

**⚠ WARNING**

- **Read and understand all safety labels, locate and read the operator's guide and watch the safety video (using the QR code link or visit Ski-Doo web site) before operation.**
- **Respect laws on minimum operator age. Manufacturer recommends a minimum operating age of 16 years old.**
- **Get familiar with your vehicle. Inexperienced riders may overlook risks and be surprised by vehicle's specific behavior and terrain conditions. Ride slowly.**
- **Excessive speed and reckless driving can kill.**
- **ALWAYS adjust your speed according to snow conditions and circumstances.**
- **Steering control and braking ability may be reduced on hard-pack snow, ice or roads. Reduce speed & allow more space to stop or turn.**
- **Never open side panels or hood while engine is running or if vehicle is in motion. Ensure to remove tether cord from post before opening those.**

**Before starting**

1. **Attach tether cord to your clothing.**
2. **Turn handlebars all the way in both directions to check for interference and insure free operation.**
3. **Check proper operation of the throttle and brake levers each time before starting. They must return to their initial position when released.**
4. **Apply parking brake.**

**After Starting:**

1. **Pull-out tether cord to check if engine shuts off.**
2. **Re-start and push in the emergency engine stop switch to check if engine shuts off.**
3. **Disengage parking brake before riding to avoid brake fading.**

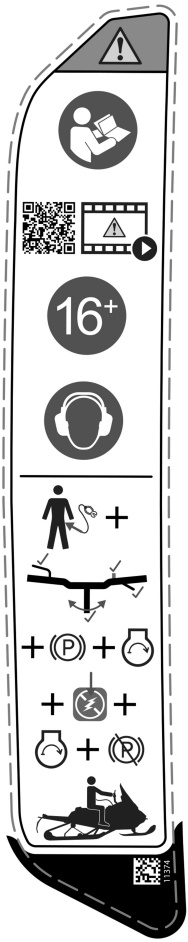


***STARTING PROCEDURE – WARNING LABEL***

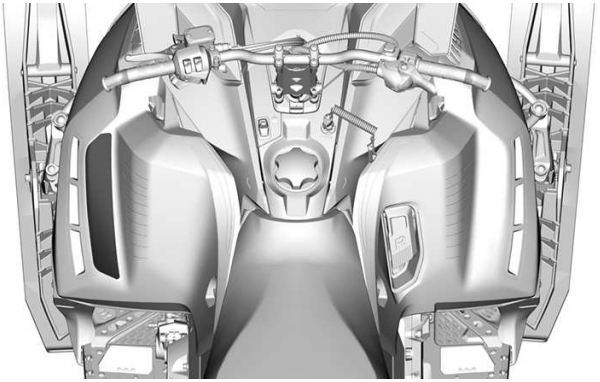

## Passenger Safety - Warning Label

**⚠ WARNING**

**Remember: you are responsible of the safety of your passenger.**
**All drivers and passengers must read the following:**

- **Always wear an approved helmet and clothing appropriate for snowmobiling.**
- **Operate defensively, scan constantly for people, objects, conditions and upcoming vehicles.**
- **Avoid surprise, be on the look out for the unexpected.**
- **Use extra caution whenever off-trail.**
- **Avoid thin ice/ open water.**
- **Never ride under the influence of alcohol or drugs, even as passenger.**
-

**This vehicle is design for one (1) operator and as many passengers as there are seats with straps or handgrips installed on the vehicle conforming to SSCC standards.**
**When riding with a passenger:**

- **Braking ability and steering control are reduced.**
- **Decrease speed and allow extra space to maneuver.**
- **Adjust suspension according to weight.**

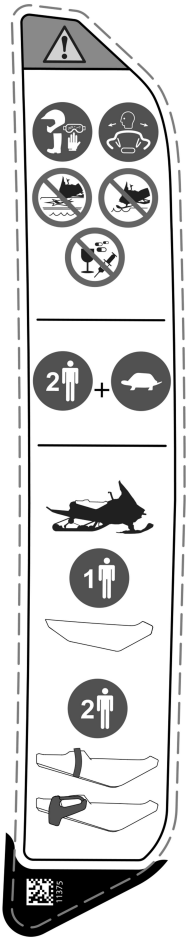


***PASSENGER SAFETY - WARNING LABEL***

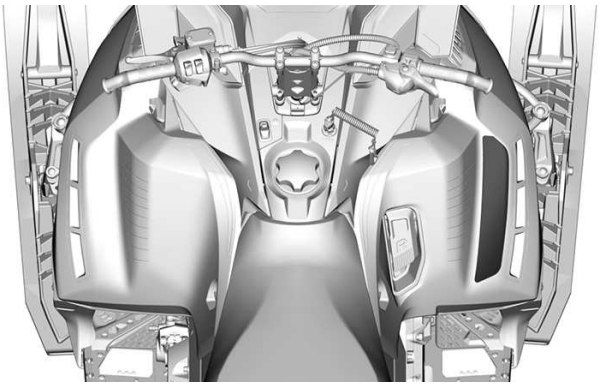

## Maximum Cargo Load and Towing Capacity - Warning Label

| ⚠ WARNING |
| --- |
| – **Never sit in the cargo area.**<br>– **Always use a securely fastened rigid tow bar to tow.**<br>– **Refer to the operator's guide for more details.**<br>– **Exceeding maximum cargo may affect steering control, braking ability and cause permanent damage.**<br>– **MAXIMUM cargo load (including tongue weight): 25 kg (245 N)**<br>– **MAXIMUM tongue weight: 10 kg (98 N)**<br>– **MAXIMUM towing capacity: 260 kg (2550 N)** |

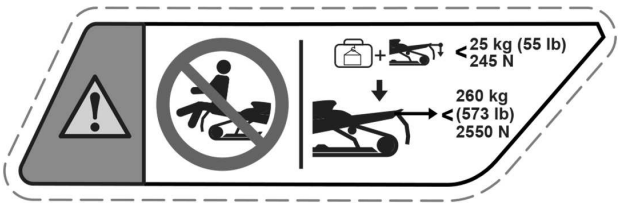


*CARGO AREA – WARNING LABEL*

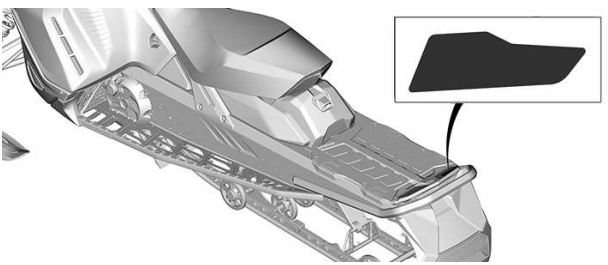

## Rotating Track — Warning Label

| ⚠ WARNING |
| --- |
| **- NEVER stand behind or near a rotating track. Debris could be projected causing severe injuries.<br>- To remove packed snow/ ice, stop engine, lift and hold vehicle on the side and use wrench tool on the belt guard.** |

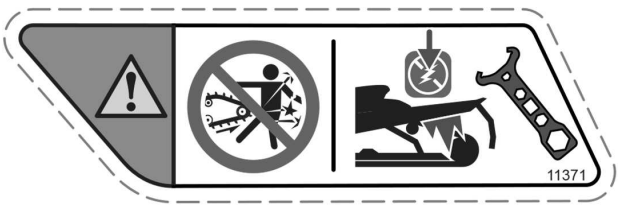


*ROTATING TRACK — WARNING LABEL*

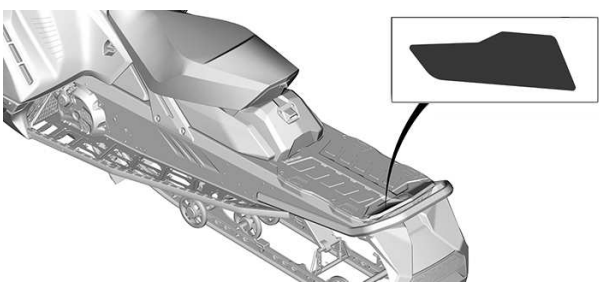

## Starting Procedure - Warning Label

**⚠ WARNING**

- **Read and understand all safety labels, locate and read the operator's guide and watch the safety video (using the QR code link or visit Ski-Doo web site) before operation.**
- **Respect laws on minimum operator age. Manufacturer recommends a minimum operating age of 16 years old.**
- **Get familiar with your vehicle. Inexperienced riders may overlook risks and be surprised by vehicle's specific behavior and terrain conditions. Ride slowly.**
- **Excessive speed and reckless driving can kill.**
- **ALWAYS adjust your speed according to snow conditions and circumstances.**
- **Steering control and braking ability may be reduced on hard-pack snow, ice or roads. Reduce speed & allow more space to stop or turn.**
- **Never open side panels or hood while engine is running or if vehicle is in motion. Ensure to remove tether cord from post before opening those.**

**Before starting**

1. **Attach tether cord to your clothing.**
2. **Turn handlebars all the way in both directions to check for interference and insure free operation.**
3. **Check proper operation of the throttle and brake levers each time before starting. They must return to their initial position when released.**
4. **Apply parking brake.**

**After Starting:**

1. **Pull-out tether cord to check if engine shuts off.**
2. **Re-start and push in the emergency engine stop switch to check if engine shuts off.**
3. **Disengage parking brake before riding to avoid brake fading.**

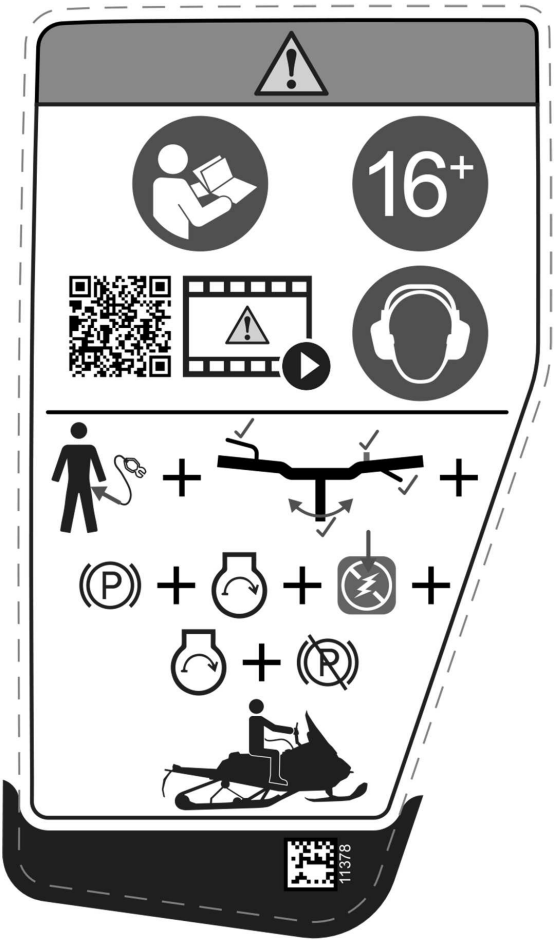


***STARTING PROCEDURE – WARNING LABEL***

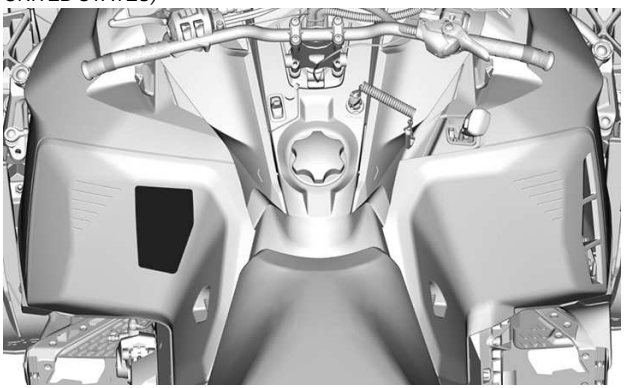

## Passenger Safety - Warning Label

**⚠ WARNING**

**Remember: you are responsible of the safety of your passenger.**
**All drivers and passengers must read the following:**

- **Always wear an approved helmet and clothing appropriate for snowmobiling.**
- **Operate defensively, scan constantly for people, objects, conditions and upcoming vehicles.**
- **Avoid surprise, be on the look out for the unexpected.**
- **Use extra caution whenever off-trail.**
- **Avoid thin ice/ open water.**
- **Never ride under the influence of alcohol or drugs, even as passenger.**
-

**This vehicle is design for one (1) operator and as many passengers as there are seats with straps or handgrips installed on the vehicle conforming to SSCC standards.**
**When riding with a passenger:**

- **Braking ability and steering control are reduced.**
- **Decrease speed and allow extra space to maneuver.**
- **Adjust suspension according to weight.**

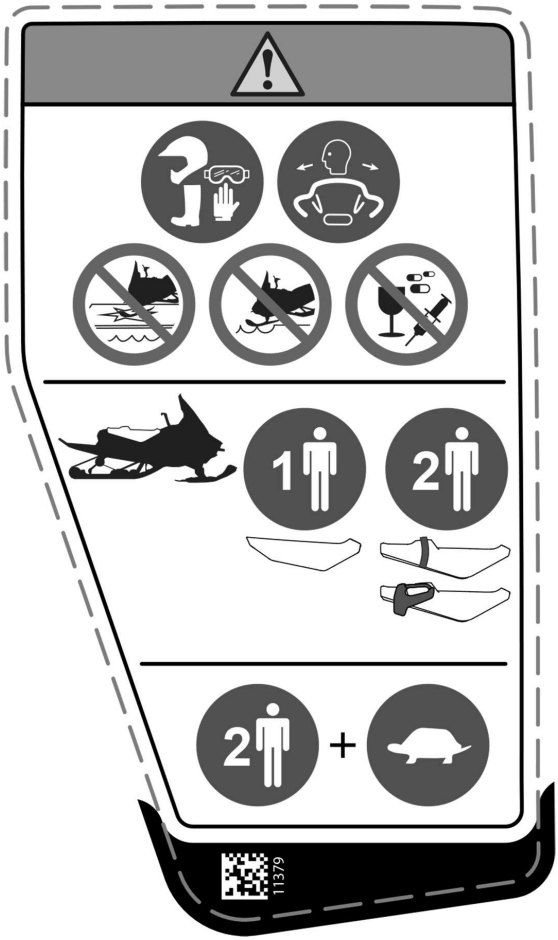


***PASSENGER SAFETY – WARNING LABEL***

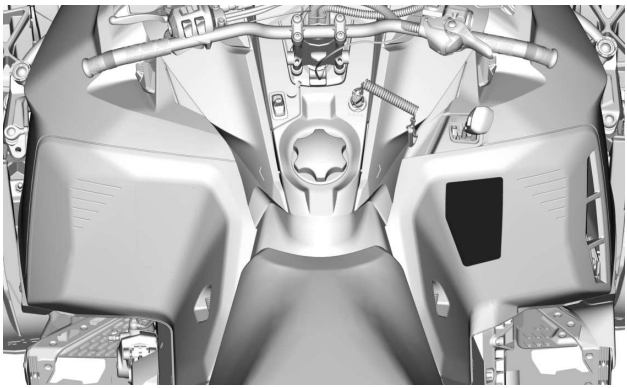

## Passenger Seat - Warning Label

| ⚠ WARNING |
| --- |
| **BEFORE riding, ALWAYS make sure that the latch on each side of the seat or the accessory is fully engaged.** |

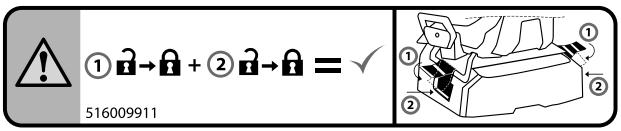


***PASSENGER SEAT - WARNING LABEL***

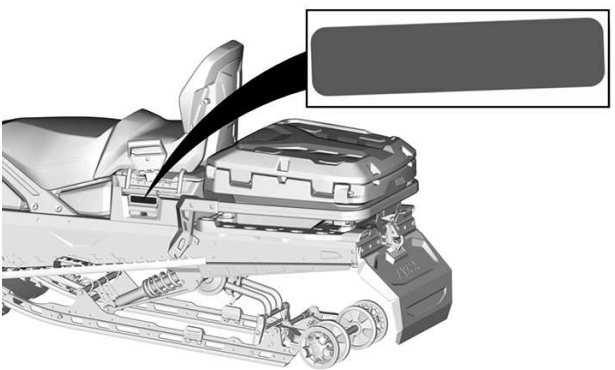

## Rear Storage Compartment - Warning Label

| ⚠ WARNING |
| --- |
| **To reduce the risk of severe injury or death:**<br>**– Never carry flammable or dangerous liquids inside cargo box. If ignited, this can lead to an explosion.**<br>**– Make sure the cover is closed and latched before riding.** |

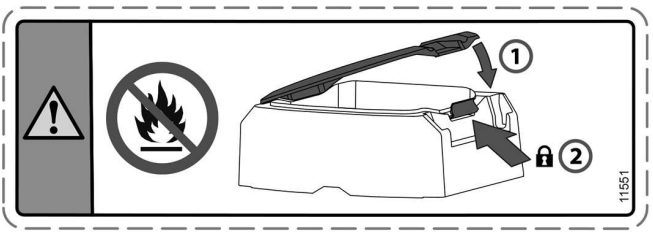


*REAR STORAGE COMPARTMENT - WARNING LABEL*

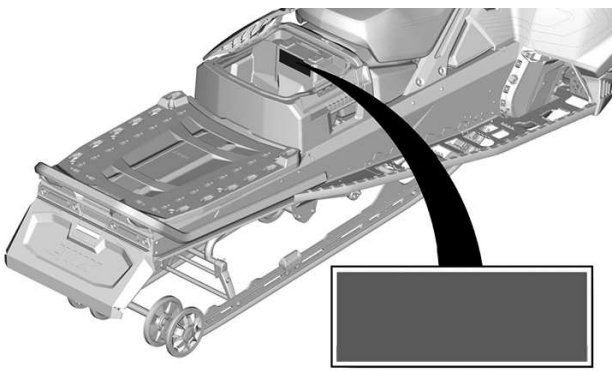

## Molded Safety Pictogram

| ⚠ WARNING |
| --- |
| **Never carry passengers on the rear storage compartment.** |

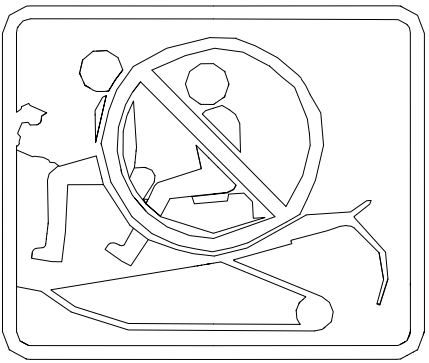

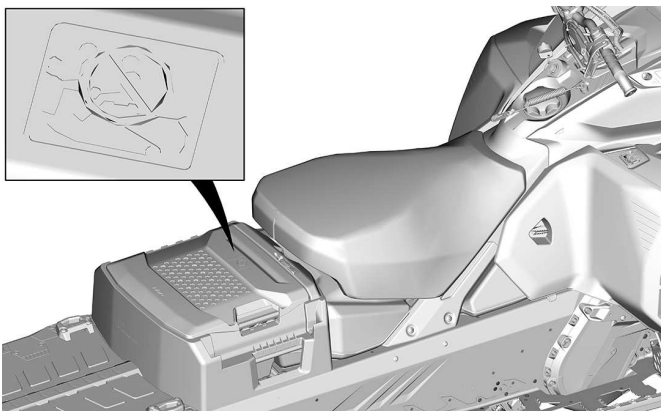

## Maximum Cargo Load and Tongue Weight Capacity — Warning Label

| ⚠ WARNING |
| --- |
| – **Exceeding maximum cargo may affect steering control, braking ability and cause permanent damage.**<br>– **MAXIMUM cargo load (including tongue weight): 57 kg (556 N)**<br>– **MAXIMUM tongue weight: 16 kg (156 N)** |

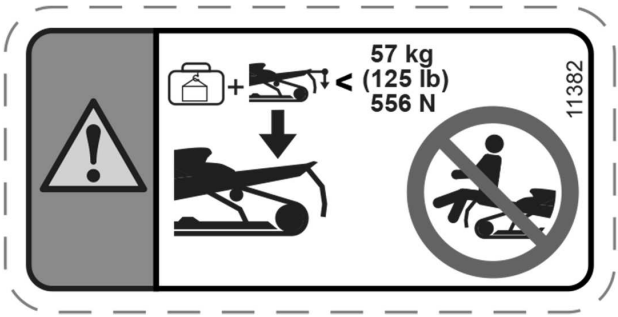


*MAXIMUM CARGO LOAD AND TONGUE WEIGHT CAPACITY — WARNING LABEL*

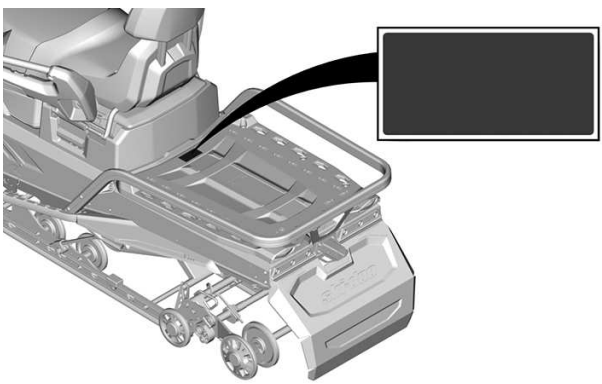

## Rotating Track — Warning Label

| ⚠ WARNING |
| --- |
| **- NEVER stand behind or near a rotating track. Debris could be projected causing severe injuries.**<br>**- To remove packed snow/ ice, stop engine, lift and hold vehicle on the side and use wrench tool on the belt guard.** |

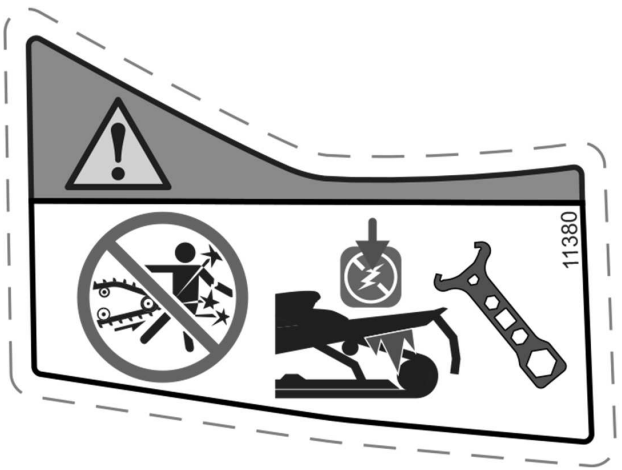


***ROTATING TRACK — WARNING LABEL***

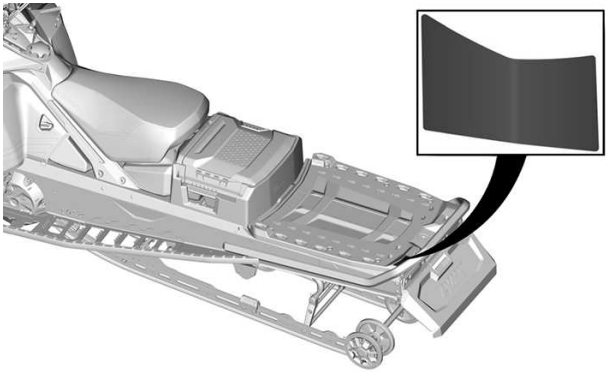

## Maximum Towing Capacity - Warning Label

| ⚠ WARNING |
| --- |
| – Always use a securely fastened rigid tow bar to tow.<br>– Refer to the operator's guide for more details.<br>– Exceeding maximum cargo may affect steering control, braking ability and cause permanent damage.<br>– MAXIMUM tongue weight: 16 kg (156 N)<br>– MAXIMUM towing capacity (HD bumper): 680 kg (6672 N)<br>– MAXIMUM towing capacity (STD bumper): 544 kg (5338 N) |

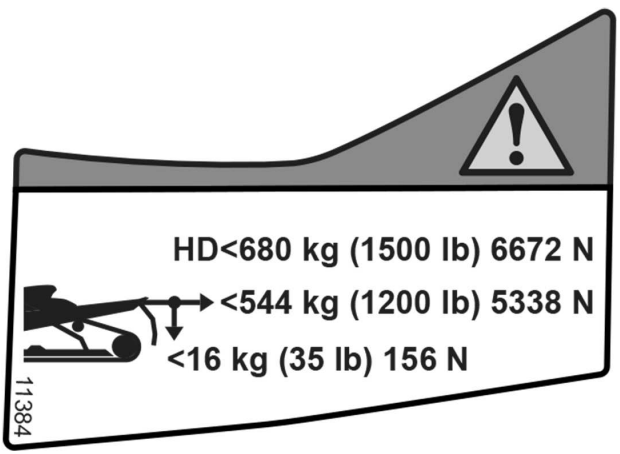


*MAXIMUM TOWING CAPACITY - WARNING LABEL*

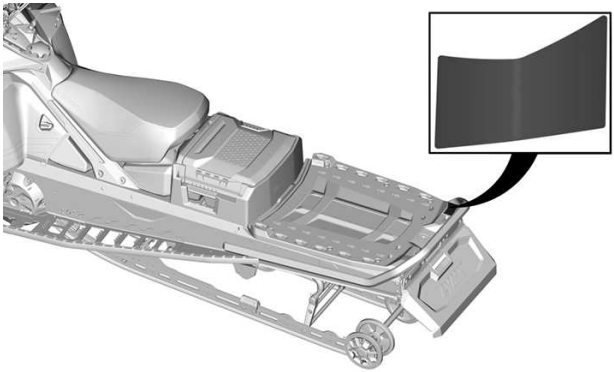

## Rear Cargo Box - Warning Label

| ⚠ WARNING |
| --- |
| – **Exceeding maximum cargo load may affect steering control, braking ability and cause permanent damage.**<br>– **For maximum cargo load specification, refer to the operator's guide.**<br>– **Maximum cargo load capacity of cargo box lid): 20 kg (44 lb).**<br>– **Maximum cargo load capacity of the box, including inside and on lid: 48 kg (105 lb).** |

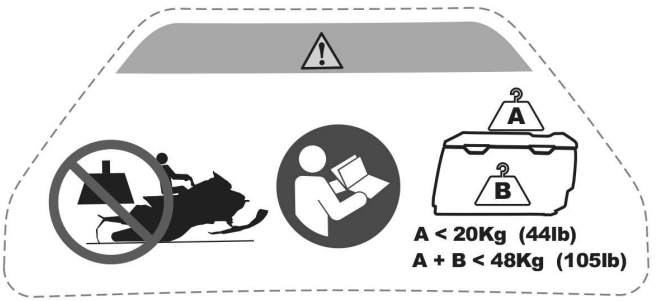


*REAR CARGO BOX (OUTSIDE) – WARNING LABEL*

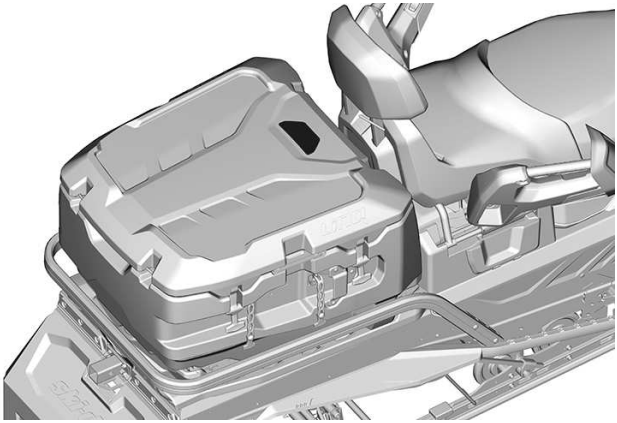

## Rear Cargo Box - Warning Label

| ⚠ WARNING |
|---|
| – NEVER carry a child or pet in this cargo box. The cargo box is airtight which can lead to suffocation.<br>– NEVER carry flammable or dangerous liquid inside the cargo box. If ignited, this can lead to an explosion and cause severe injury or death.<br>– For maximum cargo load specification, refer to the operator's guide.<br>– Maximum cargo load capacity of cargo box lid): 20 kg (44 lb).<br>– Maximum cargo load capacity of the box, including inside and on lid: 48 kg (105 lb). |

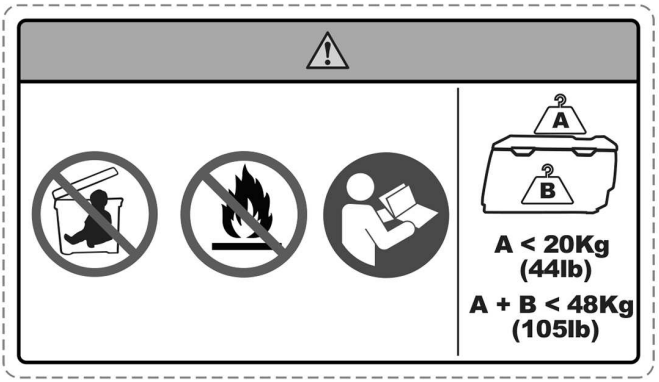


*REAR CARGO BOX (INSIDE) – WARNING LABEL*

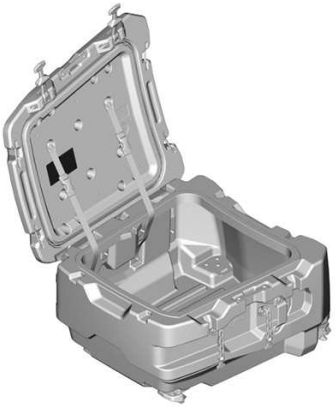

***Technical Information Labels***

## Adjustment Tools Label

– Install suspension adjustment tool first. (Illustrated red on label)
– Install pulley expander and Headlight adjustment tool second. (Illustrated blue on label)
– Refer to *Tools* in *Equipment*.

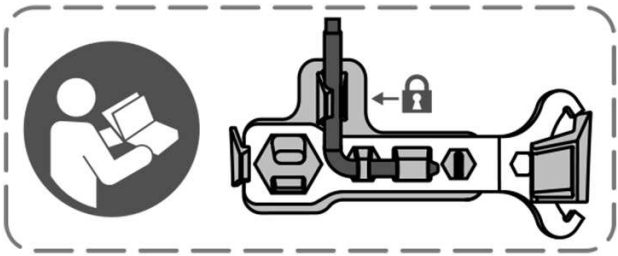

***ADJUSTMENT TOOLS***

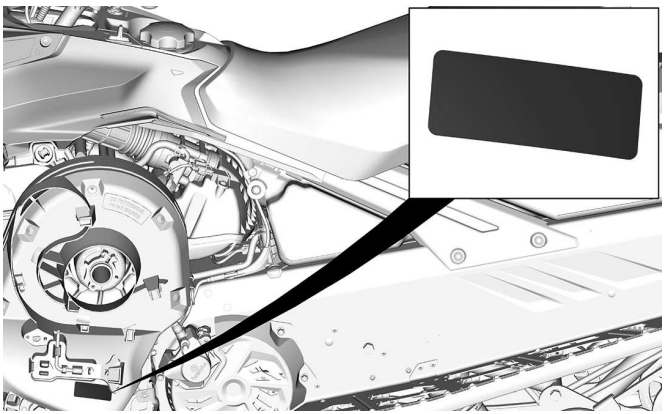

***TYPICAL***

## Recommended Fuel — Notice Label

Refer to the *Technical Specifications* for appropriate fuel type for your vehicle engine.




***AKI (RON+MON)/2 OCTANE RATING - NOTICE LABEL***




***RON OCTANE RATING - NOTICE LABEL***

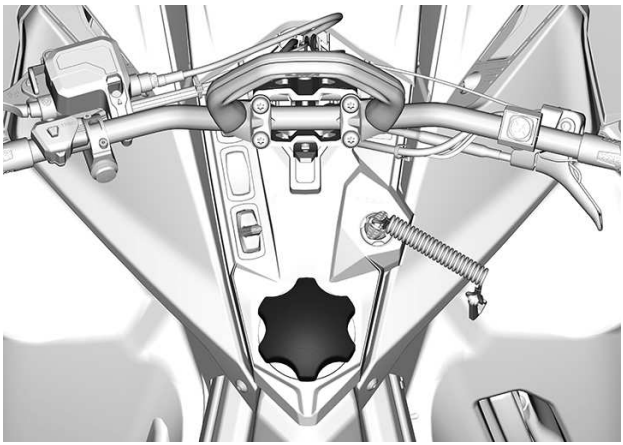

# PRE-RIDE INSPECTION

Perform a pre-ride inspection before each ride to detect potential problems during operation. The pre-ride inspection can help you monitor wear and deterioration before they become a problem. Correct any problems that you discover to reduce the risk of an accident or a malfunction.

## Before Starting the Engine

1. Remove snow and ice from body including lights, seat, footrests, controls and instruments.
2. Remove packed snow and ice from the rear suspension using the wrench tool stored on the drive belt guard.
3. Verify that air silencer prefilter is free of snow.
4. Verify that skis and steering operate freely. Check corresponding action of skis versus handlebar.
5. Check fuel and injection oil for levels and leaks. Replenish if necessary and in case of any leaks; you should seek service from an authorized BRP snowmobile dealer, repair shop, or person of your own choosing for maintenance, repair, or replacement.
6. All storage compartments must be properly latched and they must not contain any heavy or breakable objects. Hood and side panels must be also properly latched.
7. Activate the throttle control lever several times to check that it operates easily and smoothly. It must return to idle position when released.
8. Activate the brake lever and make sure the brake fully applies before the brake control lever touches the handlebar grip. It must fully return when released.
9. Apply parking brake and check if it operates properly. Leave parking brake applied.
10. Inspect drive belt condition and height. Refer to *drive belt* in *maintenance procedures*.

## After Engine is Started

For proper engine starting procedure, refer to the appropriate *Engine Starting Procedure*.

1. Check headlights high beam and low beam, taillight, stop light and pilot lamps operation.

**NOTE:**
You may need to detach tether cord from your clothes to check lights. In such a case, attach cord as soon as you get back at the controls of the snowmobile.

2. Check the engine cut-off switch (by pulling tether cord cap) and emergency engine stop switch operation.
3. Release parking brake.
4. Refer to *Vehicle warm up* and follow instructions.

## Pre-Ride Check List

| ITEM | OPERATION | ✓ |
|---|---|---|
| BODY INCLUDING SEAT, FOOTRESTS, LIGHTS, AIR FILTER, CONTROLS AND INSTRUMENTS | Check condition and remove snow or ice. | |
| SKIS AND STEERING ACTION | Check for free movement and proper operation. | |
| SKI RUNNERS | Check for proper operation. | |
| FUEL | Check for proper level and no leaks. | |
| INJECTION OIL (IF APPLICABLE) | Check for proper level and no leaks. | |
| COOLANT | Check for proper level and no leaks. | |
| DRIVE BELT | Check for cracks, fraying or abnormal wear and proper height. | |
| THROTTLE LEVER | Check for proper operation. | |
| BRAKE LEVER | Check for proper operation. | |
| PARKING BRAKE, BRAKE | Check for proper operation. | |
| BRAKE FLUID | Check for proper level and no leaks. | |
| STORAGE COMPARTMENT | Check for proper latching and no heavy or breakable objects. | |
| TRACK | Check condition and remove snow or ice.<br>For studded tracks, refer to *Traction Enhancing Products*. | |
| SLIDER SHOES | Check for proper operation. | |
| EMERGENCY ENGINE STOP SWITCH AND ENGINE CUT-OFF | Check for proper action. Tether cord must be attached to operator clothing eyelet. | |

| | | |
|---|---|---|
| SWITCH (TETHER CORD CAP) | | |
| LIGHTS | Check for proper operation. | |
| HORN BUTTON (IF EQUIPPED) | Check for proper operation. | |

# REPORTING SAFETY DEFECTS

In Canada, if you believe that your vehicle has a defect which could cause a crash or could cause injury or death, you should immediately inform Transport Canada in addition to notifying Bombardier Recreational Products Inc.

If Transport Canada receives similar complaints, it may open an investigation, and if it finds that a safety defect exists in a group of vehicles, it may order a recall and remedy campaign. However, Transport Canada cannot become involved in any individual problems between you, your dealer or Bombardier Recreational Products Inc.

**To contact Transport canada:**



819-994-3328 (Gatineau-Ottawa area or internationally)
Toll free : 1 800-333-0510 (in Canada)



Transport Canada - ASFAD
330 Sparks Street
Ottawa, ON
K1A 0N5




**https://www.tc.gc.ca/recalls**

This page is intentionally blank

# VEHICLE INFORMATION

# PRIMARY CONTROLS

## Handlebar

The handlebar controls the steering of the snowmobile. As the handlebar is rotated to right or left, the skis are turned right or left to steer the snowmobile.

| ⚠ WARNING |
| --- |
| **Fast reverse while turning, could result in loss of stability and control.** |



***TYPICAL***

## Throttle Lever

Throttle lever is located on the RH side of handlebar.

When squeezed, it increases the engine speed. When released, engine speed returns automatically to idle.

***Models with 900 ACE Turbo R Engine***

Designed to be thumb activated.

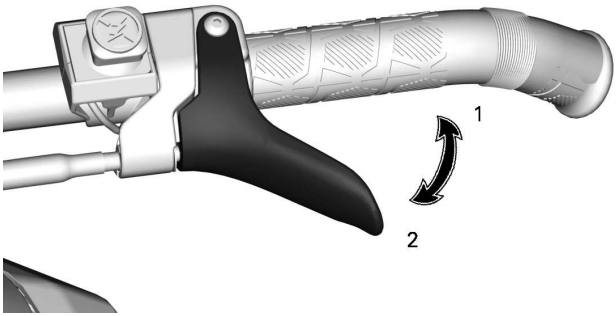


***CABLE THROTTLE LEVER***

1. *To accelerate*
2. *To decelerate*

***Except Models with 900 ACE Turbo R Engine***

Designed to be either thumb or finger activated.

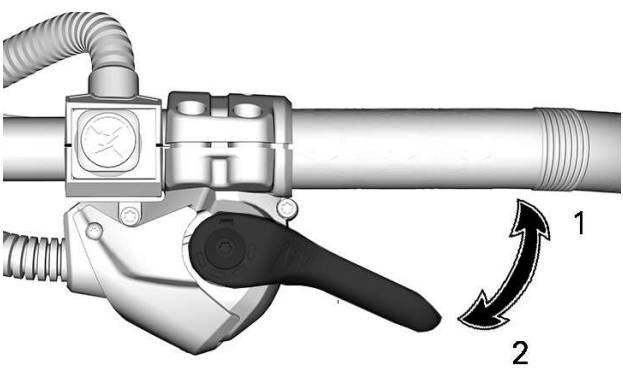


***ITC THROTTLE LEVER***

1. *To accelerate*
2. *To decelerate*

**⚠ WARNING**

**Test the throttle lever operation each time before starting the engine. The lever must return to the rest position once released. Otherwise, do not start engine.**

***Switching from Thumb to Finger Throttle Position (¡TC Throttle Lever)***

**⚠ CAUTION**

**It is highly recommended to immobilize the snowmobile before attempting any modification to the throttle position as it could lead to a hazardous situation.**

There are mainly three positions to choose from when going from the thumb to the finger throttle position and the best one will be to the rider's preference and in direct relation with the riding style and conditions.

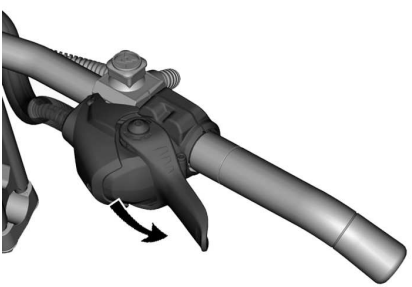

***THUMB THROTTLE POSITION : PUSH DOWNWARD TO ROTATE THROTTLE HOUSING***

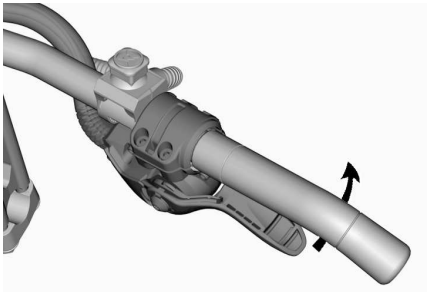

*IF WANTED, CONTINUE TO ROTATE THE THROTTLE HOUSING*

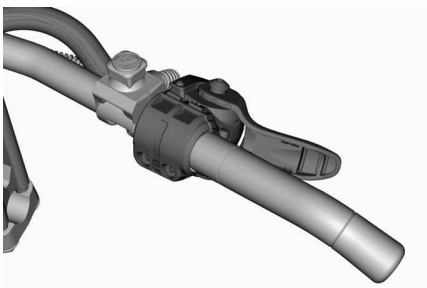

*FINGER THROTTLE POSITION*

| ⚠ CAUTION |
| --- |
| **It is HIGHLY recommended to use gloves and NOT mitts when using the finger throttle position.**<br>**It is not recommended to use the finger throttle position while riding in dense off trail areas.** |

The procedure to go back to the thumb throttle position is the reverse of the one shown above.

## Emergency Engine Stop Switch

The emergency engine stop switch is located on the RH side of handlebar.

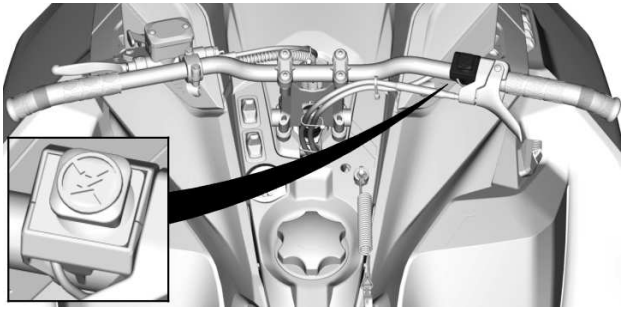

***TYPICAL***

To stop the engine in an emergency, push the switch down in OFF position and simultaneously apply the brake.



***OFF POSITION***

To allow engine starting, pull the switch up in ON position.



*ON POSITION*

All operators of the snowmobile should familiarize themselves with the function of the emergency engine stop switch by using it several times on first outing and whenever stopping the engine thereafter. This engine stopping procedure will become a reflex and will prepare operators for emergency situations requiring its use.

**⚠ WARNING**

**If the switch has been used in an emergency caused by a suspected malfunction, the source of the malfunction should be determined and corrected before restarting engine. Visit an authorized BRP snowmobile dealer for servicing.**

## Brake Lever

Brake lever is located on the LH side of handlebar.

When squeezed, brake is applied. When released, it automatically returns to the rest. Braking effect is proportional to the pressure applied on the lever and to the type of terrain and its snow coverage.

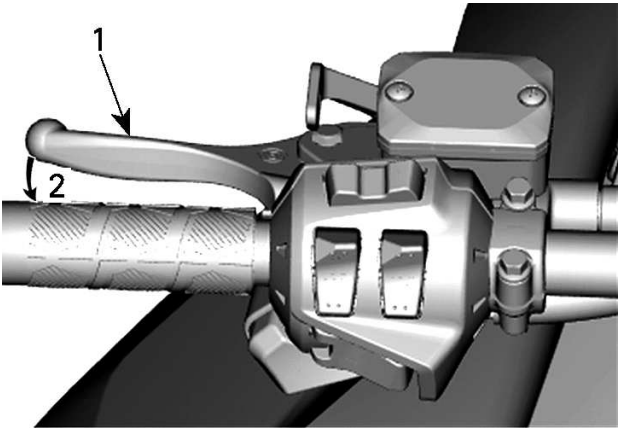


***TYPICAL***

1. *Brake lever*
2. *To apply brake*

## Parking Brake Lever

Parking brake lever is located on the LH side of handlebar.

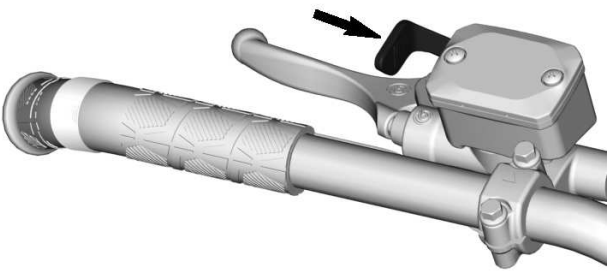

***TYPICAL***

Parking brake should be used whenever snowmobile is parked.

**⚠ WARNING**

**Make sure parking brake is fully disengaged before operating the snowmobile. When you ride the vehicle, brake pads that are caused to drag by a continuous pressure on the lever may cause damage to the brake system and cause loss of braking capacity and/or fire.**

### *To Engage Parking Brake*

Apply and hold brake, then lock brake lever using the parking brake lever as shown.

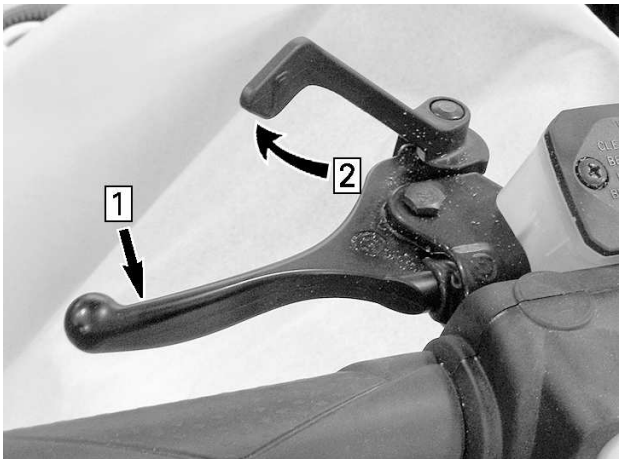


***TYPICAL — ENGAGE MECHANISM***

1. *Apply and hold brake*
2. *Lock brake lever using parking brake lever*

### *To Release Parking Brake*

Squeeze brake lever. Parking brake lever will automatically return to its original position. Always release parking brake before riding.

## Engine Cut-off Switch

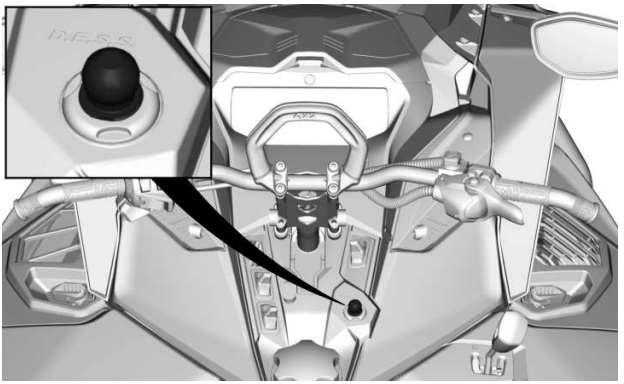


***D.E.S.S.***

The engine cut-off switch (tether cord) is located on the console.

The tether cord cap must be securely snapped on the engine cut-off switch to allow vehicle operation.

Pulling the tether cord cap from the switch shuts the engine off.

| ⚠ WARNING |
| --- |
| **Always attach the tether cord eyelet to clothing before starting the engine.** |

***D.E.S.S. (Digitally Encoded Security System)***

The tether cord cap has an integrated D.E.S.S. key to provide you and your snowmobile with the equivalent security of a conventional lock key.

The D.E.S.S. key contains an electronic chip which features a unique permanently memorized digital code.

Your authorized BRP snowmobile dealer has programed the D.E.S.S. of your snowmobile to recognize the D.E.S.S. key in the tether cord cap to allow vehicle operation.

If another tether cord is used without programming the D.E.S.S., the engine will start but will not reach drive pulley engagement speed to move vehicle.

Make sure the tether cord cap is free of dirt or snow.

### *D.E.S.S. Flexibility*

The D.E.S.S. of your snowmobile can be programmed by your authorized BRP snowmobile dealer to accept up to 8 different keys.

We recommend the purchase of additional tether cords from your authorized BRP snowmobile dealer. If you have more than one D.E.S.S. equipped BRP snowmobile, each can be programmed by your authorized BRP snowmobile dealer to accept the other vehicles D.E.S.S. keys.

# SECONDARY CONTROLS

Some features may not apply to your model or could be optional.

Vehicle safety labels are not shown on illustrations. For information on vehicle safety labels, refer to *Vehicle Safety Labels*.

## Handlebar Multifunction Switch

Multifunction switch is located on the LH side of handlebar.

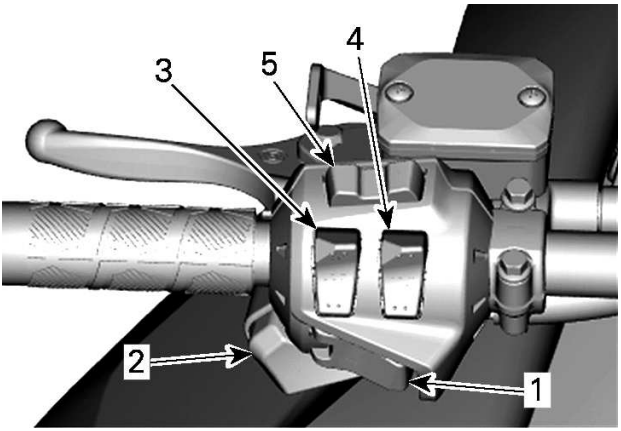


***TYPICAL - MODELS WITHOUT THE LARGE PANORAMIC 7.8" WIDE LCD DISPLAY***

1. *Start/Electronic Reverse button*
2. *Headlights dimmer switch*
3. *Heated grips switch*
4. *Heated throttle lever switch*
5. *Mode/set button (If equipped)*

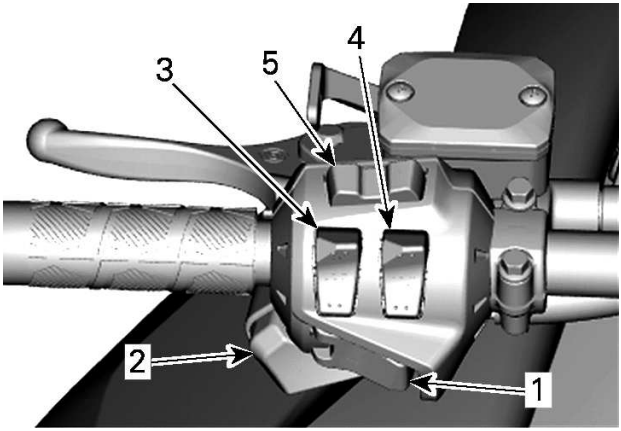


***MODELS WITH THE LARGE PANORAMIC 7.8" WIDE LCD DISPLAY***

1. *Start/Electronic Reverse button*
2. *Headlights dimmer switch*
3. *Heated grips switch*
4. *Heated throttle lever switch*
5. *Audio Control and Phone call control*

***Start / Electronic Reverse Button***

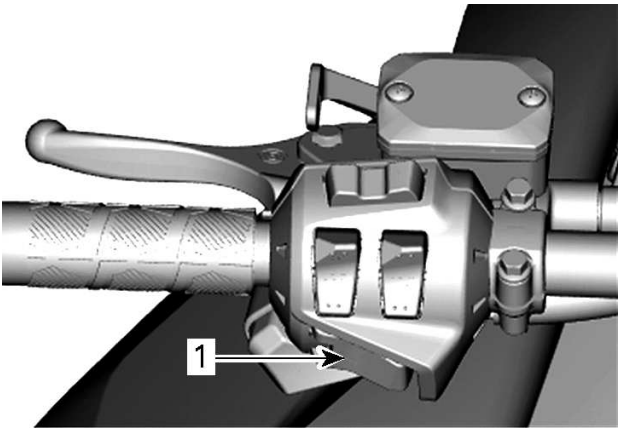


*1. Start / RER button*

Press to start engine. Refer to *Engine Starting Procedure* in *basic procedures*.

Once engine is started, press to engage the electronic reverse. Refer to *Shifting in Reverse* in *basic procedures* for procedure.

***Headlights Dimmer Switch***

Press to select HI or LOW beam. Lights are automatically ON when the engine is running.

***Heated Grips Switch***

Depress switch as required to select heating intensity to keep your hands at a comfortable temperature.

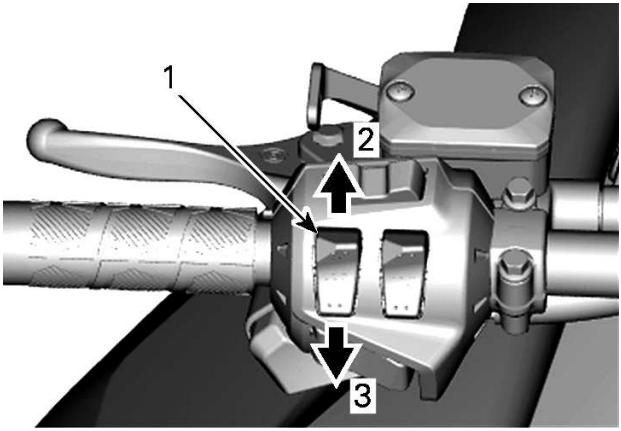


***VARIABLE INTENSITY***

1. *Heated grip switch*
2. *Increase heat*
3. *Decrease heat*

The heating intensity is displayed via the digital display.

**NOTE:**
There are ten intensity settings. When released, display will return to fuel level.

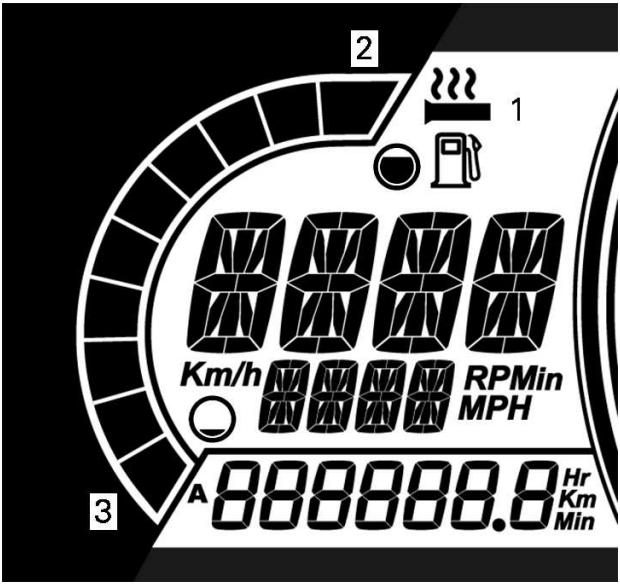


***MODELS WITHOUT THE LARGE PANORAMIC 7.8" WIDE LCD DISPLAY SHOWN***

1. *Heated grip icon*
2. *More heat*
3. *Less heat*

Heated grips will be in OFF position when there are no bars displayed on the gauge.

**NOTE**:
For models with the Large Panoramic 7.8" Wide LCD Display, refer to *Large Panoramic 7.8" Wide LCD Display* section.

***Heated Throttle Lever Switch***

Depress switch as required to select heating intensity to keep your thumb at a comfortable temperature.

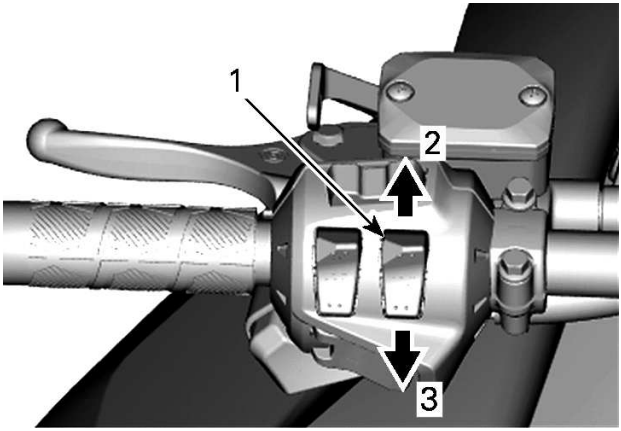


***VARIABLE INTENSITY***

1. *Heated throttle lever switch*
2. *Increase heat*
3. *Decrease heat*

**NOTE:**
There are ten intensity settings. When released, display will return to engine temperature.

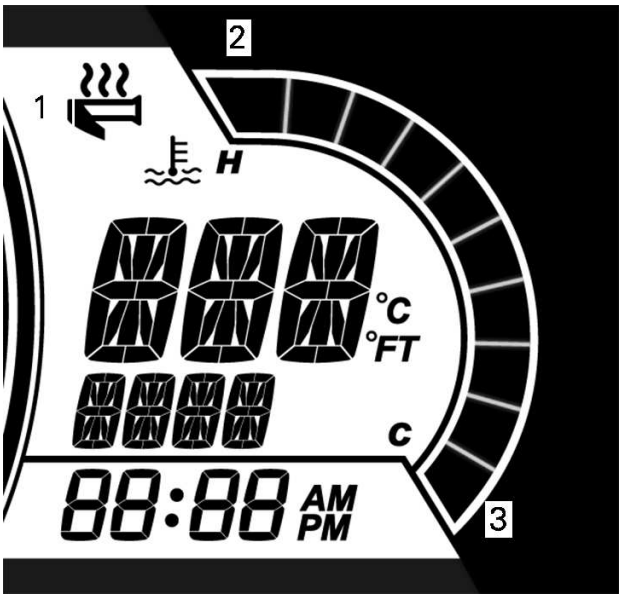


***MODELS WITHOUT THE LARGE PANORAMIC 7.8" WIDE LCD DISPLAY SHOWN***

1. *Heated grip icon*
2. *More heat*
3. *Less heat*

Heated throttle lever will be in OFF position when there are no bars displayed on the gauge.

**NOTE:**
For models with the Large Panoramic 7.8" Wide LCD Display, refer to *Large Panoramic 7.8" Wide LCD Display* section.

***Menu/Set Button***

***Models without the Large Panoramic 7.8" Wide LCD Display***

This button is used to manage the information displayed on the multi-function gauge.

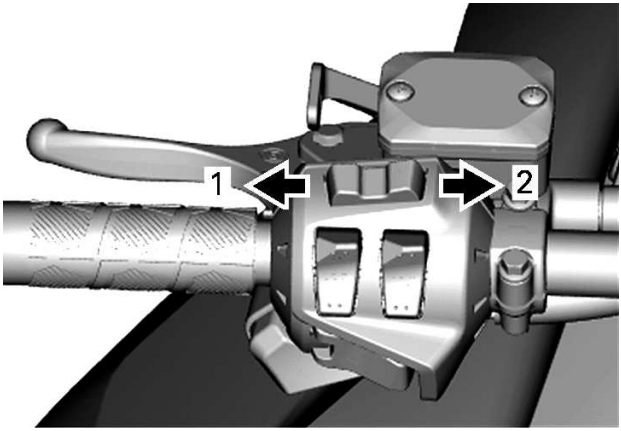


***MENU/SET BUTTON***

1. *Menu function*
2. *SET function*

Refer to *Gauge* for complete information.

***Audio Volume Control (if equipped)***

***Models with the Large Panoramic 7.8" Wide LCD Display***

This button is used to manage the information displayed on the multi-function gauge or answer/cancel a phone call.

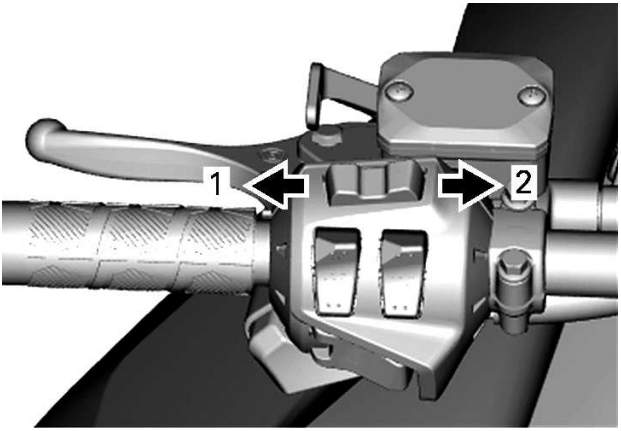


1. *Volume DOWN/Cancelling a call*
2. *Volume UP/Answering a call*

Refer to *Large Panoramic 7.8" Wide LCD Display* section for complete information.

## Rotary Control (if equipped)

The rotary control is located on the left side of the console.

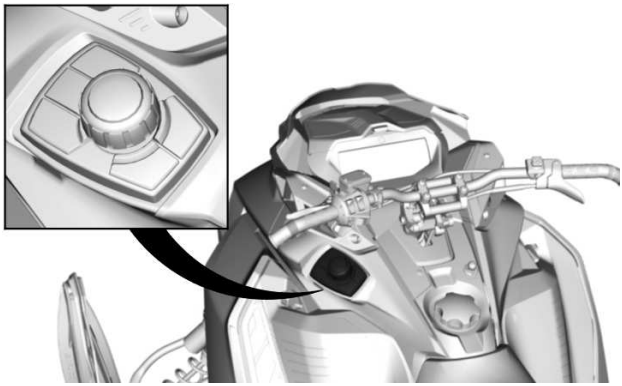

***TYPICAL***

It is used to navigate into the LCD display and control the audio system.

– Seek/Play/Pause buttons allow to control volume and music listened in the helmet audio system.
– The center knob can be used to navigate inside menu or select and set settings.
– Specific vehicle data button allow to see engine temperature, and battery voltage. It will also shown air suspension adjustment (if equipped)
– BRP Connect button: quick access to already downloaded APPS.

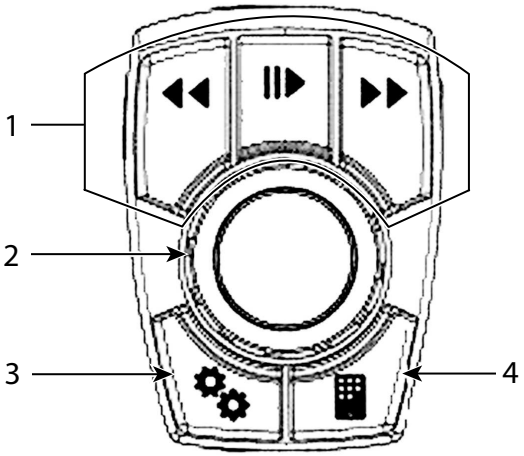


1. *Audio control*
2. *Center knob*
3. *Vehicle data button*
4. *BRP Connect*

When audio source is selected, the Preset/Seek buttons work as follow:

– Short press: Previous or Next Preset
– Long press: Seek - up or down

When Bluetooth audio source is selected, the Preset/Seek buttons work as follow:

– Left: Previous song
– Right: Next song

## Driving Modes Button

Allow to select SPORT or ECO mode.

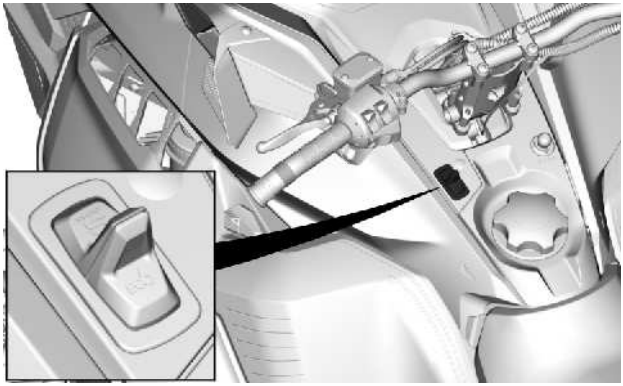

## Gearshift Lever

***Model equipped with Hi/Lo Gearbox***

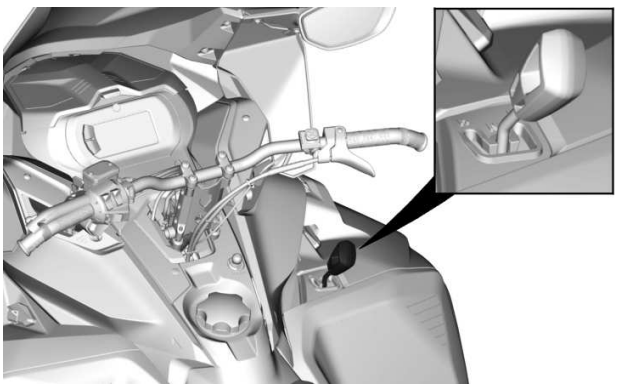

Use this lever to select gears. The gearbox has two forward gears and a neutral.

Shifting from one position to another is possible at speeds lower than 30 km/h (19 MPH)

**⚠ CAUTION**

**Shifting at a speed faster than 30 km/h (19 MPH) may cause serious damage to the gearbox.**

***Neutral***

The neutral position disengages the gearbox.

***High Range (Forward)***

This position selects the high speed range of the gearbox. It is the normal driving speed range. It allows the vehicle to reach its maximum speed.

***Low Range (Forward)***

This position selects the low speed range of the gearbox. It allows the vehicle to move slowly with maximum torque.

***NOTICE***

**Use the low speed range to pull a cargo carrier, carry heavy cargo, go over obstacles or drive uphill and downhill.**

## Reverse Lever (if equipped)

Refer to *Shifting in Reverse* in *Basic Procedures* for proper operation.

## Horn Button (if equipped)

***For vehicles sold in Finland***

Press on the horn button to activate the horn.

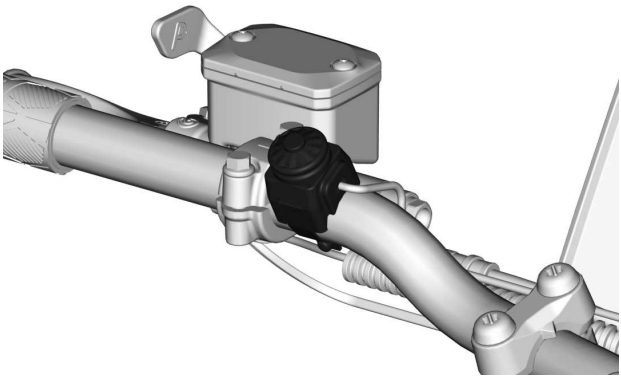

***TYPICAL***

## Passenger Heated Grip Switch (if equipped)

The switch is located on the LH passenger handhold.

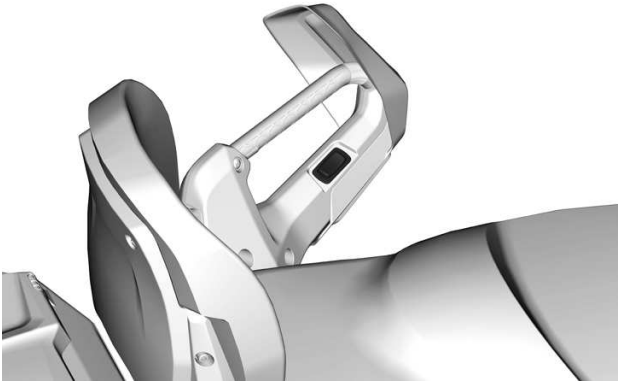

Adjust heating intensity as shown.

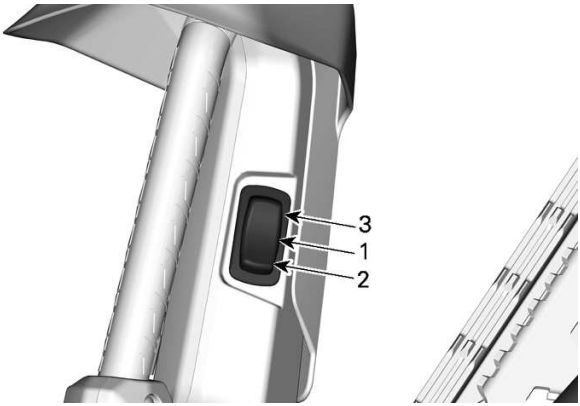


1. *Off*
2. *Warm*
3. *Hot*

# BODY AND SEAT

## Front and Rear Bumpers

To be used whenever snowmobile requires manual lifting.

**⚠ CAUTION**

**Beware of injuries by using proper lifting techniques, notably using your legs force. Do not attempt to lift the rear of vehicle if it is above your limits. Use appropriate lifting device or have assistance to share lifting stress if possible.**

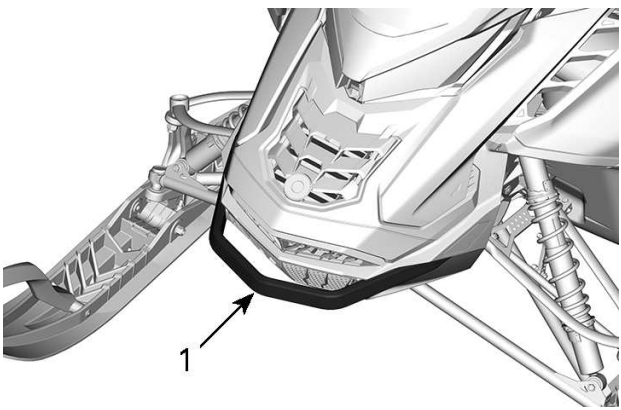


*1. Front bumper*

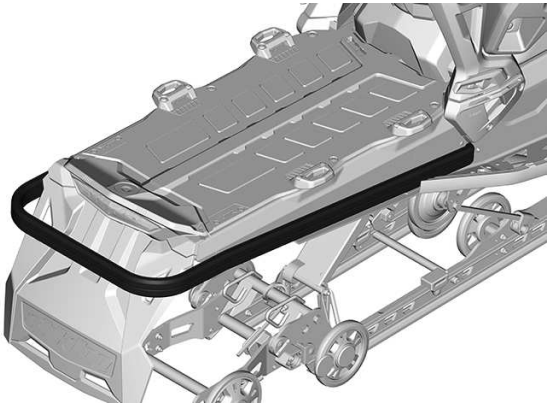

*TYPICAL - STD BUMPER*

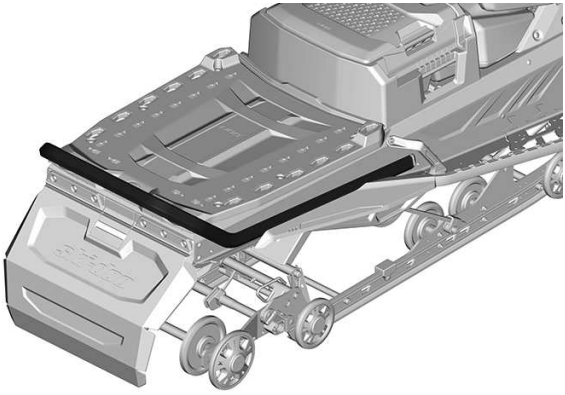

*STD BUMPER — 20 INCHES TUNNEL*

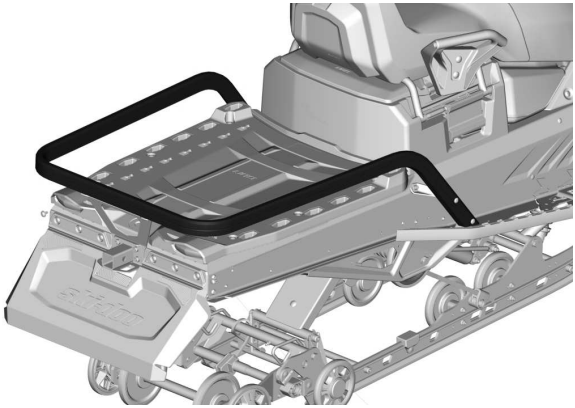

*CARGO - HEAVY DUTY BUMPER — 20 AND 24 INCHES TUNNEL*

## Windshield

### *Removing the Windshield*

1. Pull off the deflector pins off the grommets, if applicable.

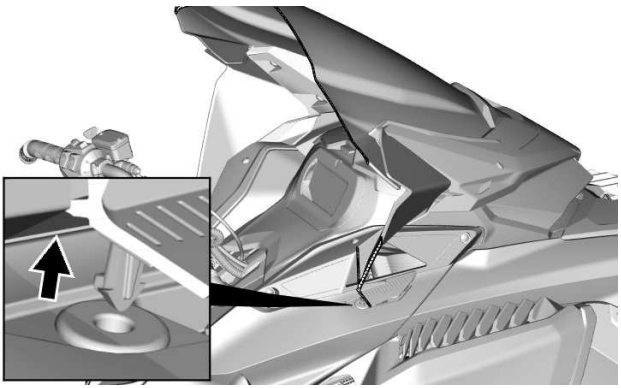

*WITH SIDE DEFLECTORS*

2. Place hands on each sides of the windshield.

3. Pull the windshield up until both side pins come out of there rubber grommets.

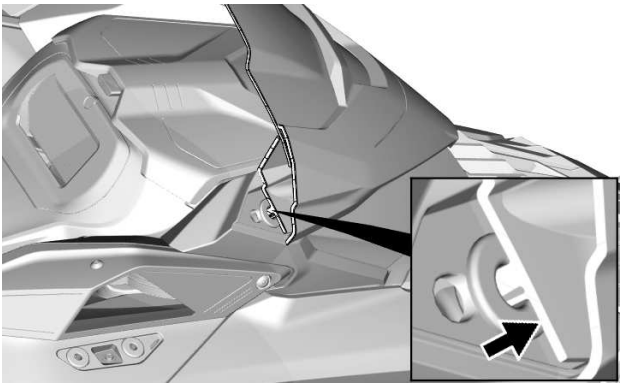

4. Disengage the center pin or tab, if applicable.

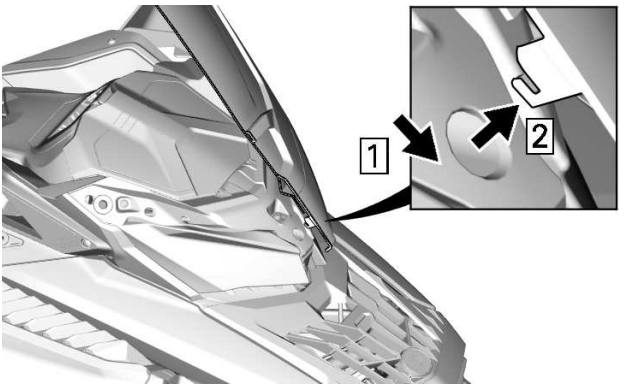


***CENTER TAB - WITH SIDE DEFLECTORS***

***Installing the Windshield***

1. Lubricate the grommets using soapsuds, if required.

## NOTICE

**Do not lubricate grommets with any type of grease.**

2. Insert center pin or tab in headlamp module hole.

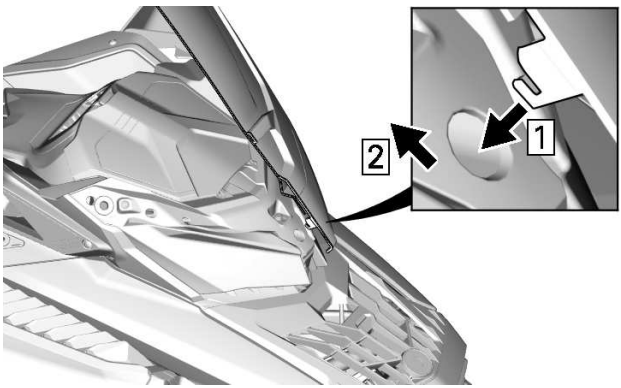


***CENTER TAB - WITH SIDE DEFLECTORS***

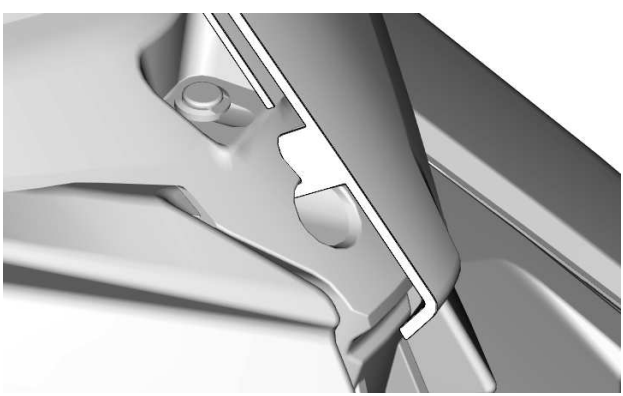

3. Secure windshield by inserting the windshield pins into the grommets.

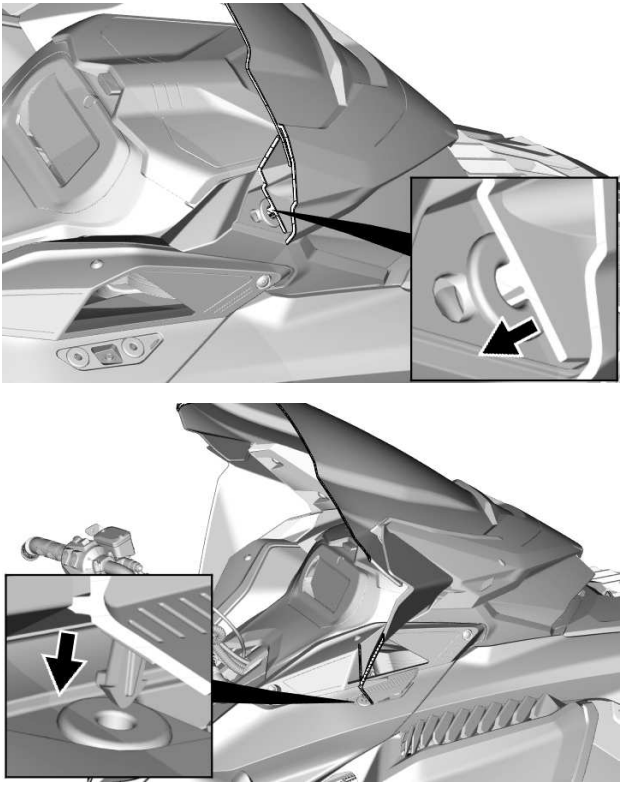

*WITH SIDE DEFLECTORS*

## Adjustable Mirrors (if equipped)

Each mirror can be adjusted to suit operator's preference.

| ⚠ WARNING |
| --- |
| **Adjust with vehicle at rest in a safe place.** |

When installing a cover, the mirrors can be tilted downward to ease installation.

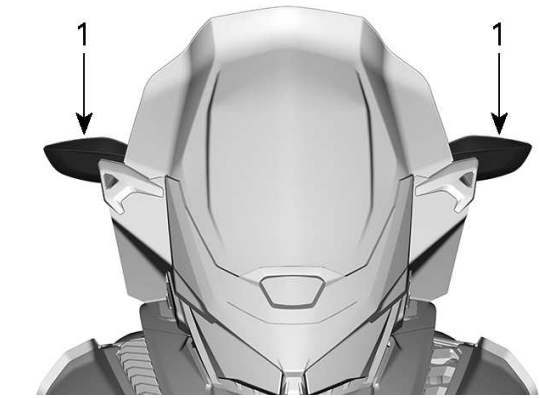


*1. Mirrors*

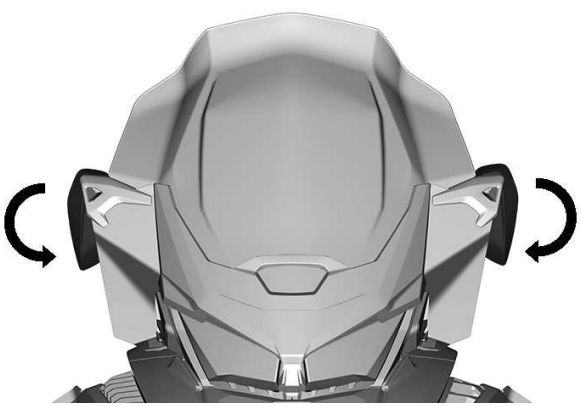

## Front Storage Compartment

A storage compartment is located at the front of the vehicle, above the gauge.

The Operator's Guide and the emergency starter rope are in the front storage compartment.

To open, push the button and lift the cover.

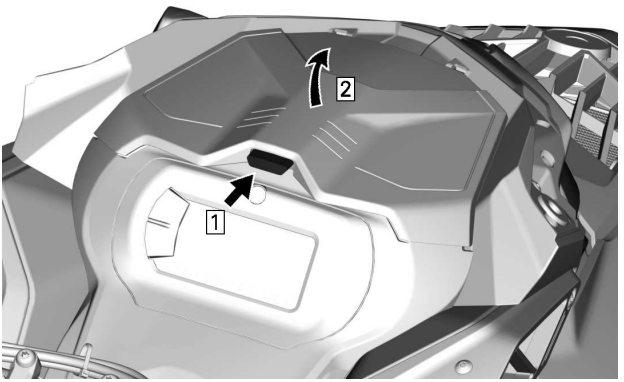


**NOTE:**
When closing, make sure cover is secured properly. You will hear a "clic".

## Side Panels

| ⚠ WARNING |
| --- |
| **Never operate engine with side panels opened or removed from vehicle.** |

***Removing the Side Panels***

1. Unlock all latches, then open panel.

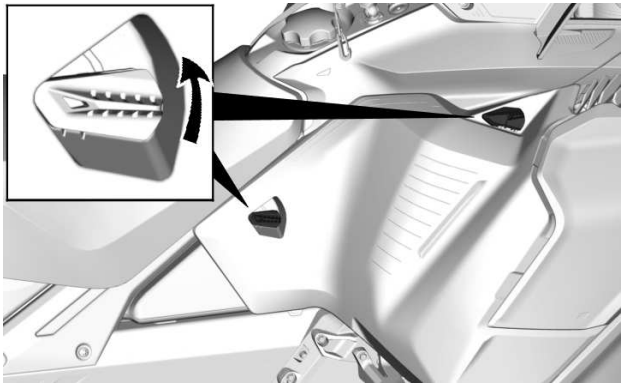

2. Pivot side panel around lower edge.

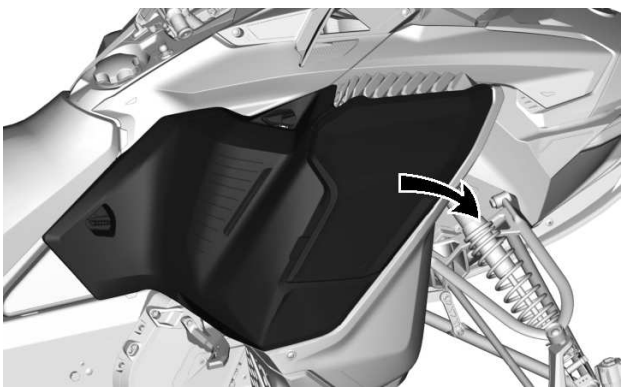

3. Slide the panel hinge off the bottom pan.

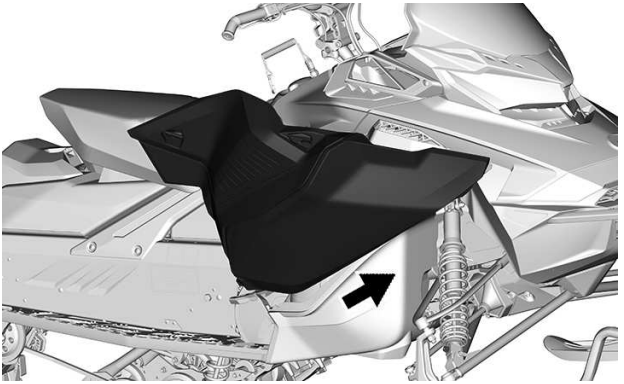

**NOTICE**

**Make sure to place panel in a safe place to avoid scratching.**

***Installing the Side Panels***

The installation is the reverse of the removal procedure.

## Upper Body Module

***Removing the Upper Body Module***

1. Remove the windshield.
2. Open the storage compartment.

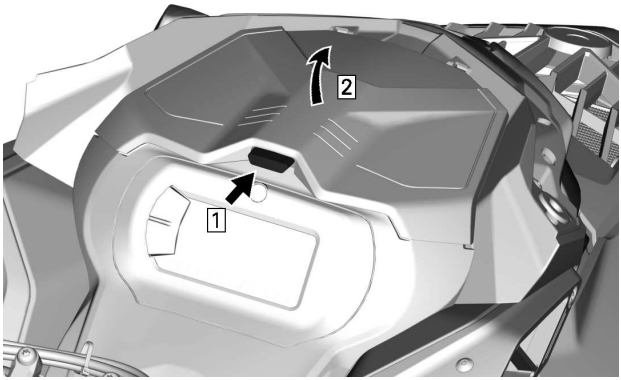


3. Remove the gauge support retaining screws.



***TYPICAL***

4. Lift the front of the gauge support, then slide it forward to remove it.

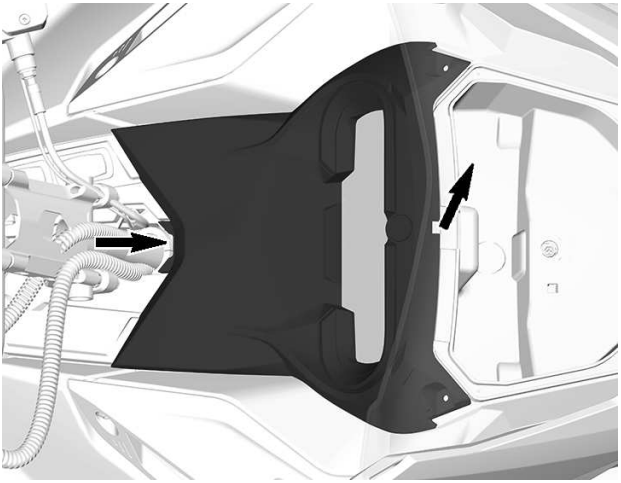

5. Disconnect the gauge connector and remove the support.
6. Lift the storage compartment and disconnect the 12V power outlet connectors, if equipped, before removing the storage compartment.

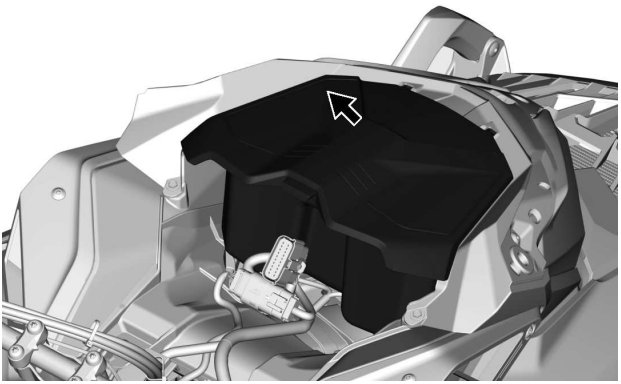

7. Disconnect the headlight connectors.

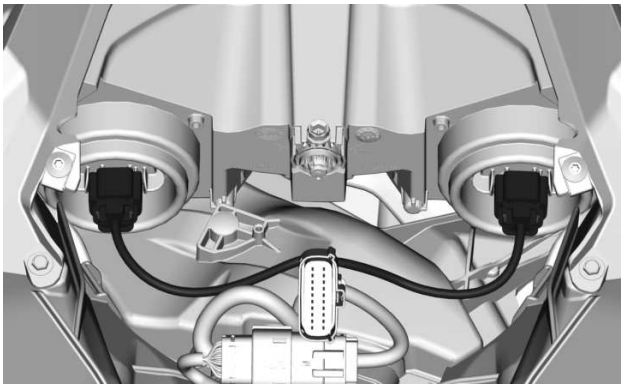

***TYPICAL***

8. Remove both side panels. Refer to *Side Panels* in this section.
9. Loosen the air intake duct clamp.

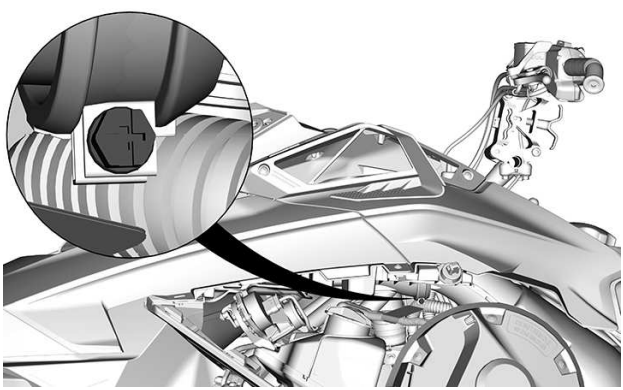

10. Remove the upper body module retaining screws on both sides.

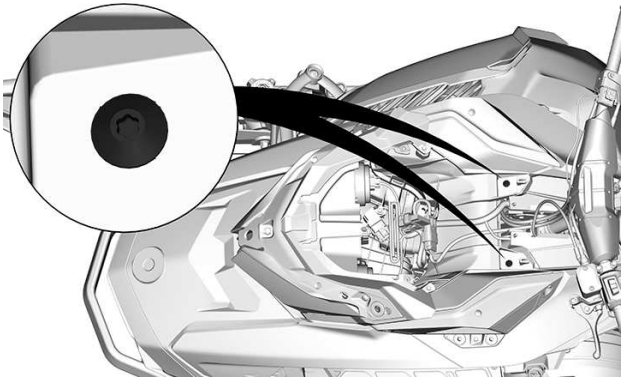

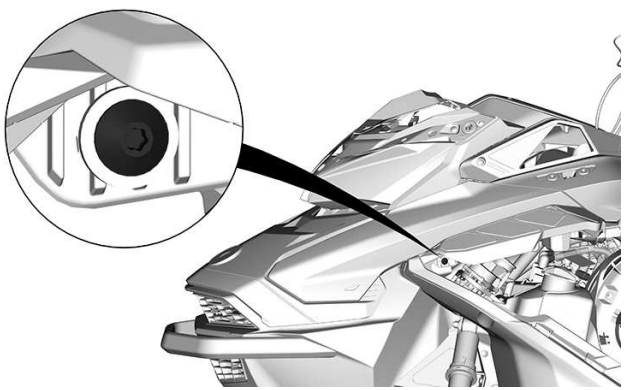

11. Lift the rear end of both lateral hood until their tabs come out of the rear console.

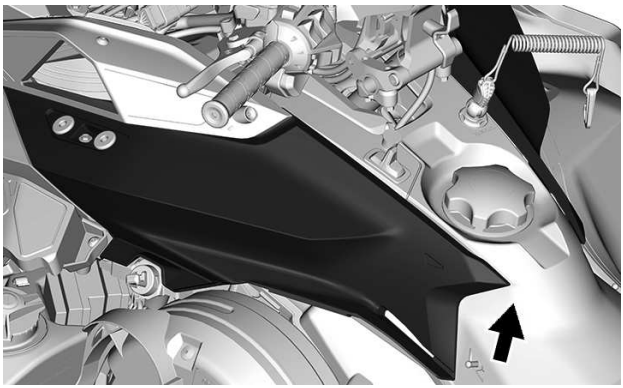

12. Remove the upper body module.

    1. Grab the upper body module in the gauge support section.
    2. Pull the module forward.
    3. Remove the module from the vehicle.

***Installing the Upper Body Module***

1. At front, insert the upper body module tabs into the bottom pan openings.



2. Lower the rear end of the upper body module.
3. Insert the rear end hooks of the upper body module into the slots in the console.

**NOTE:**
Make sure the air intake duct is positioned properly connected.

4. Tighten air intake duct clamp.

| TIGHTENING TORQUE | |
|---|---|
| Intake duct clamp | 1.0 ± 0.2 Nm (9 ± 2 lbf-in) |

5. On both sides, install the upper body module retaining screws.

| TIGHTENING TORQUE | |
|---|---|
| Upper body screws | 1.8 ± 0.2 Nm (16 ± 2 lbf-in) |

6. Connect the headlight connectors.
7. Install the storage compartment but leave the cover open.
8. Install gauge, secure with the screws.

| TIGHTENING TORQUE | |
|---|---|
| Gauge support screws | 2.3 ± 0.2 Nm (20 ± 2 lbf-in) |

## Seat

***400 mm (16 in.) Tunnel Width***

## Removing the Seat (ball stud lock)

While pushing in the center of the seat towards front, pull on both sides. Insert hand between seat and body to lift up and backward to unlock.

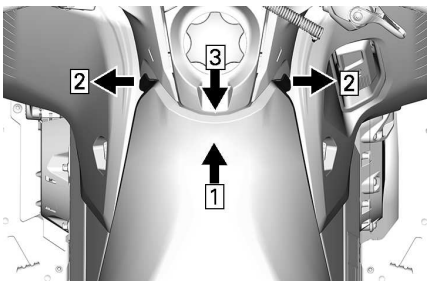


1. *Push*
2. *Pull*
3. *Lift up and backward to unlock seat*

Slide seat rearwards to remove it.

## Installing the Seat (ball stud lock)

**NOTICE**

**Riding the vehicle with any objects between the seat and the fuel tank could damage the fuel tank. NEVER place any objects between seat and fuel tank.**

Place seat over the hooks, then slide it forward.

Securely engage both ball studs at front.

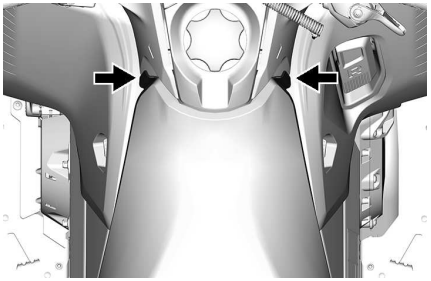

| ⚠ WARNING |
| --- |
| **Make sure seat is securely latched before riding.** |

## Backrest

### Removing the Backrest

1. Disengage the LinQ lever cap on both sides.

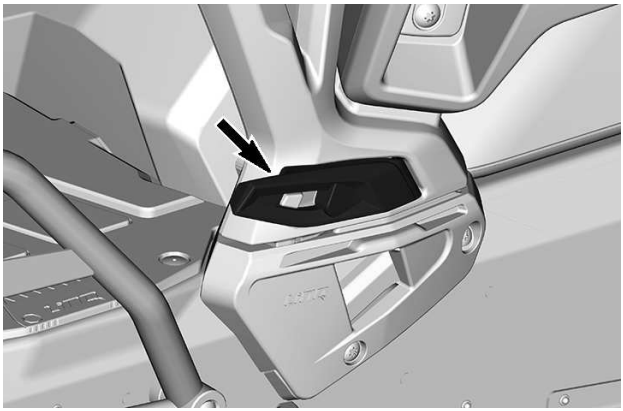

2. Unlock the LinQ on both sides.

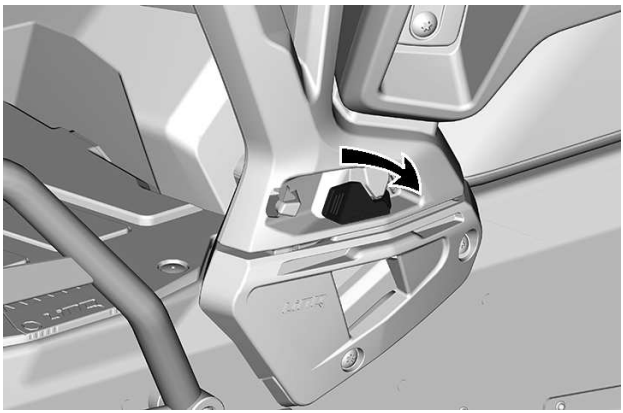

3. Pull the backrest upwards to remove..

## Installing the Backrest

The installation is the reverse of the removal procedure.

## Passenger Handholds (if equipped)

The passenger handholds provide a strong holding point and comfort for the passenger on long rides.

## Adjusting the Passenger Handholds

To adjust the handhold height, proceed as follows:

1. Remove the screws.

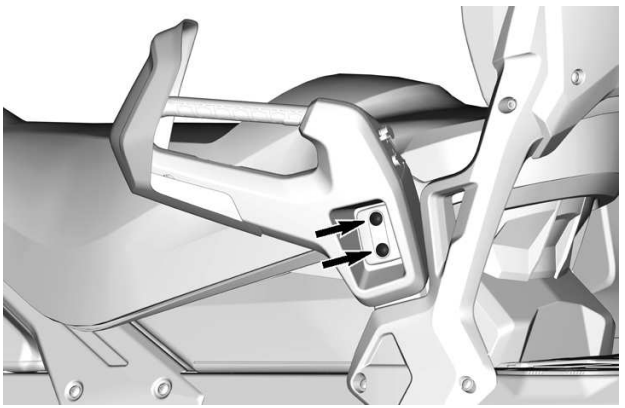

2. Raise or lower the handhold to suit passenger's comfort.

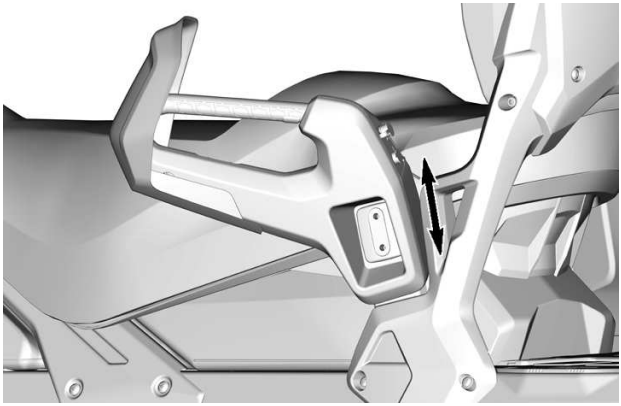

3. Reinstall the screws. Tighten to specification.

| Tightening Torque | |
|---|---|
| Handhold screw | 24.5 ± 3.5 Nm (18 ± 3 lbf-ft) |

***500 and 600 mm (20 and 24 in.) Tunnel Width***

## Operator's Seat

### Removing the Seat

Release the latch at the back of the seat.

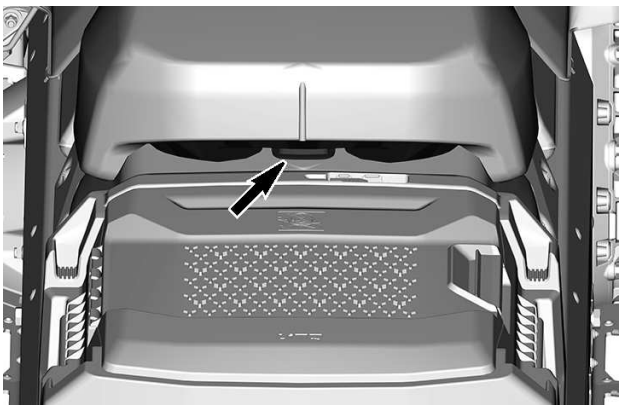

Slide seat rearwards to remove it.

### Installing the Seat

| NOTICE |
| --- |
| **Riding the vehicle with any objects between the seat and the fuel tank could damage the fuel tank. NEVER place any objects between seat and fuel tank.** |

Place seat over the hooks, then slide it forward.

Securely engage the latch.

| ⚠ WARNING |
| --- |
| **Make sure seat is securely latched before riding.** |

## Passenger's Seat

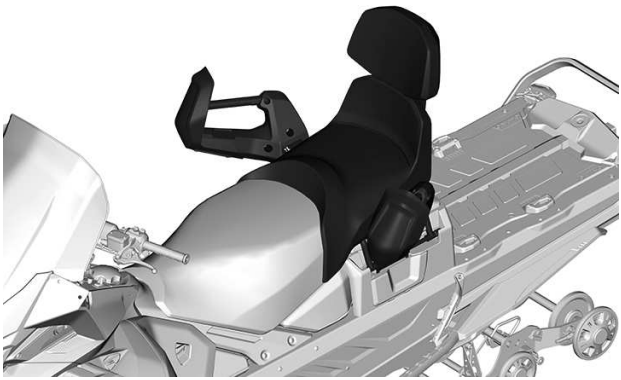

*TYPICAL*

**⚠ WARNING**

**Any passenger must be able to firmly lay is feet on the footrests and keep his hands on the handholds at all times when seated. Respecting those physical criteria is important to ensures that the passenger is stable and to reduce the risks of ejection.**

## Removing the Passenger Seat

1. Unlock seat latch on both sides.

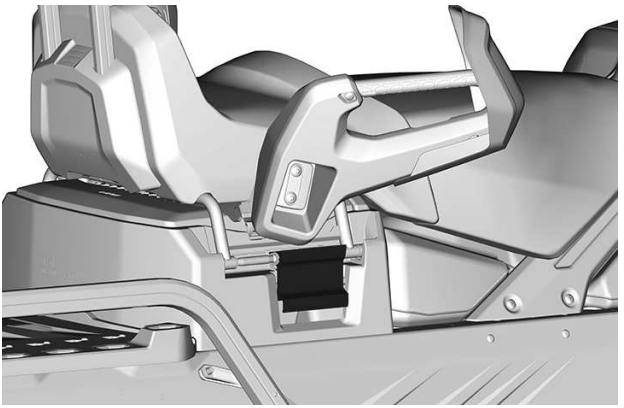

*TYPICAL*

2. Lift the seat to disconnect the electrical connector.
3. Remove passenger seat.

## Installing the Passenger Seat

The installation is the reverse of removal procedure. However, pay attention to the following.

Ensure to reach the second step when latching.

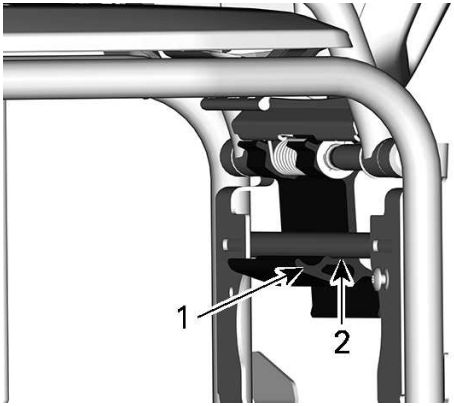


*1. First step*
*2. Second step*

| ⚠ WARNING |
| --- |
| **Ensure the latch is on the second step before riding.** |

# EQUIPMENT

Some features may not apply to your model or could be optional.

## Operator's Guide

The Operator's Guide should be stored in the *Front Storage Compartment*.

## Heated Cell Case (if equipped)

A heated cell case is mounted underneath the front storage compartment cover. It allows to keep your cell phone at a warm temperature while charging.

The temperature inside the case is kept between 5° C and 15° C (41° F and 59° F).

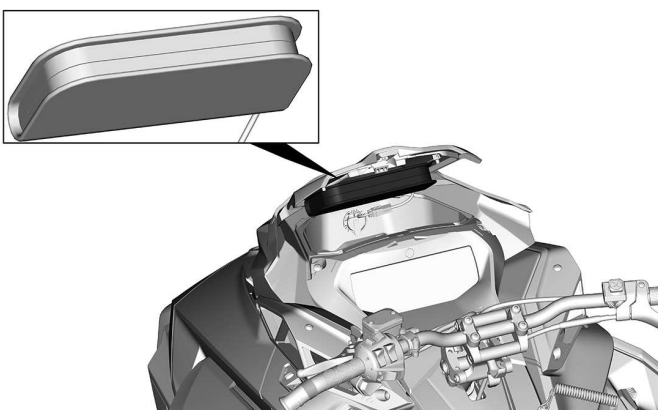

## Power Outlet - USB (if equipped)

The USB power Outlet is located in the front storage compartment. It allows to charge your cell phone while stored in the heated cell case.

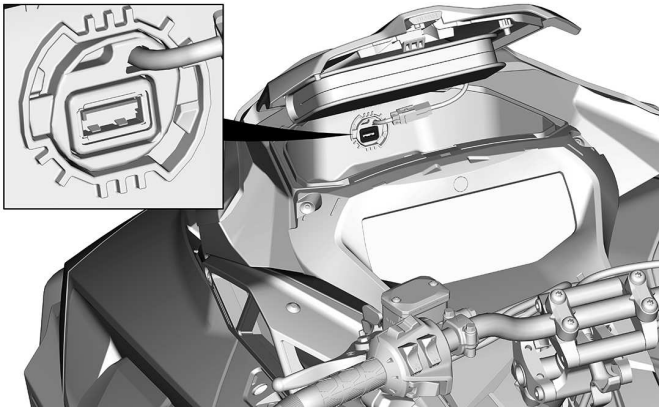

## Adjustable Handlebar Riser (If Equipped)

| ⚠ WARNING |
| --- |
| **Always stop engine before adjusting handlebar.** |

The handlebar can be set in four different positions.

To change handlebar position, pull lever and position handlebar as desired.

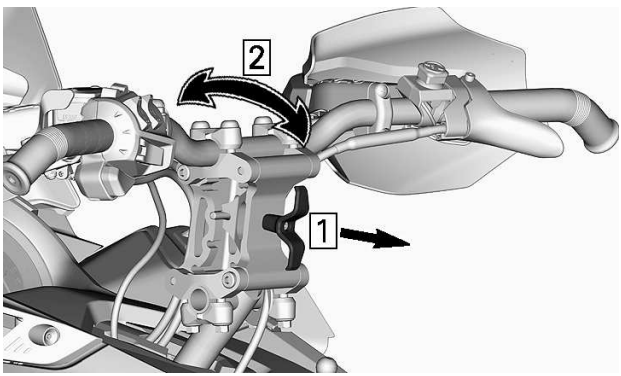

Move the handlebar back and forth to make sure mechanism is securely engaged.

## Mountain Strap

This handlebar strap shall be used only to provide additional pulling force when snowmobile is stuck in a slanted position. On an exceptional basis it can be used at very slow speed only, when standing on the right running board to bring the vehicle back on its desired path. When riding, both hands should remain on the handlebar grips to provide braking capability, as well proper steering and directional control. Do not use handlebar strap for towing, lifting or side hilling.

**⚠ WARNING**

**Do not use while riding at speed. Steering control is highly reduced and brake control is not possible.**

## Electric Visor Jack Connector

An electric visor can be connected to the jack connector. A stress relief extension is supplied with the vehicle.

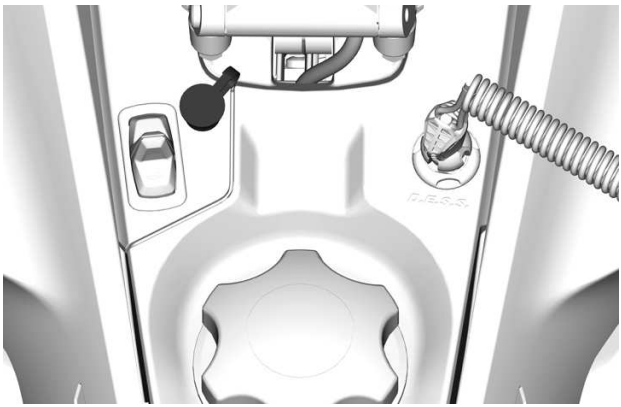

*DRIVER - ELECTRIC VISOR JACK CONNECTOR LOCATION*

## Drive Belt Guard

***Removing the Drive Belt Guard***

**⚠ WARNING**

**NEVER operate engine:**

- **Without shields and belt guard securely installed.**
- **With hood and/or side panels opened or removed.**

**NEVER attempt to make adjustments to moving parts while engine is running.**

**NOTE:**
Belt guard is purposely made slightly oversize to maintain tension on its pins and retainers preventing undue noise and vibration. It is important that this tension be maintained when reinstalling.

Remove tether cord cap from engine cut-off switch.

Open the LH side panel. See procedure in this section.

Remove retaining pin.

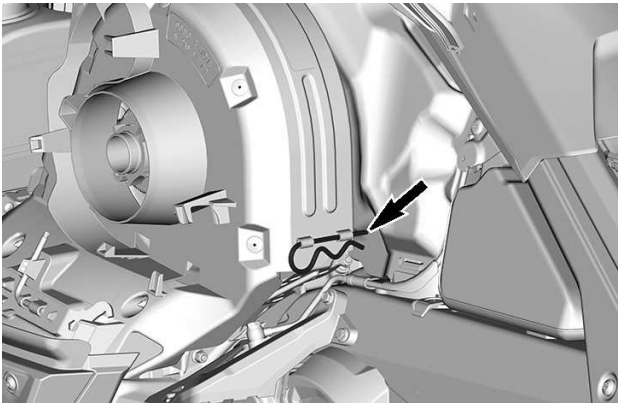

***TYPICAL***

Lift rear portion of guard then release from front tab.

***Installing the Drive Belt Guard***

1. Insert belt guard tab in front support slot.

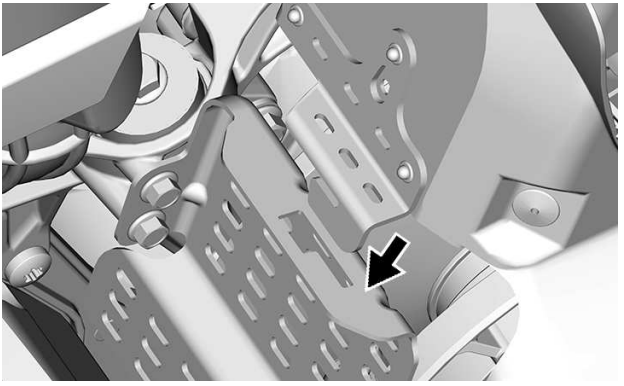

2. Push drive belt guard toward engine then toward front of vehicle.

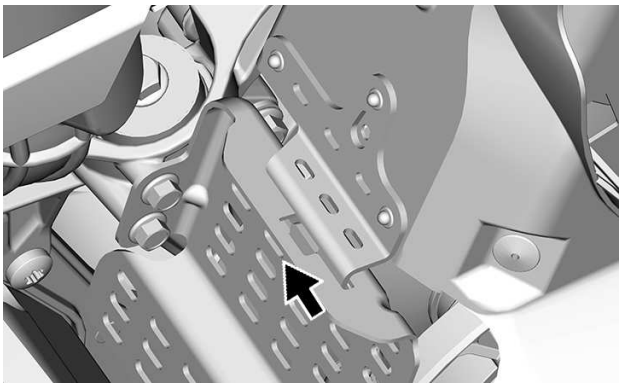

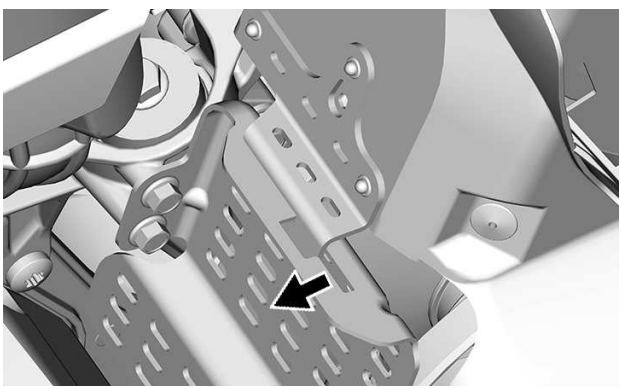

3. Insert belt guard tab between bottom pan and hook.

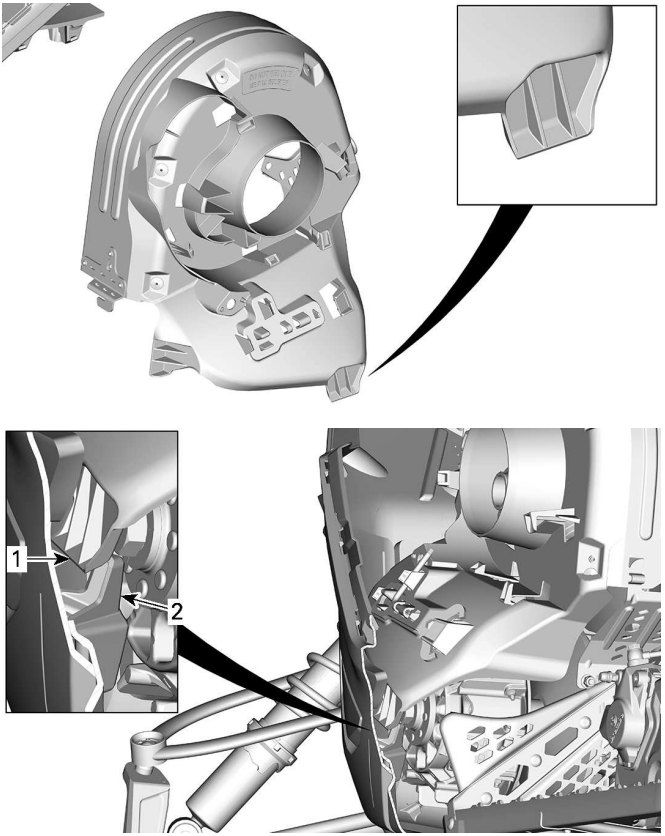


***LH SIDE BOTTOM PAN - CROSSCUT VIEW***

1. *Belt guard tab*
2. *Bottom pan hook*

4. Position the rear portion of the belt guard over the retainer and secure it using the retaining pin.

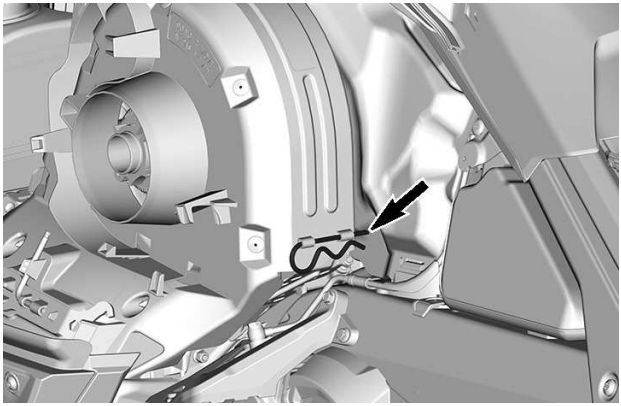

## Spare Drive Belt Holder

A spare drive belt can be stored in a holder located on the drive belt guard.

**NOTE:**
The spare drive belt is not supplied with the snowmobile.

Position spare drive belt into drive belt guard slot.

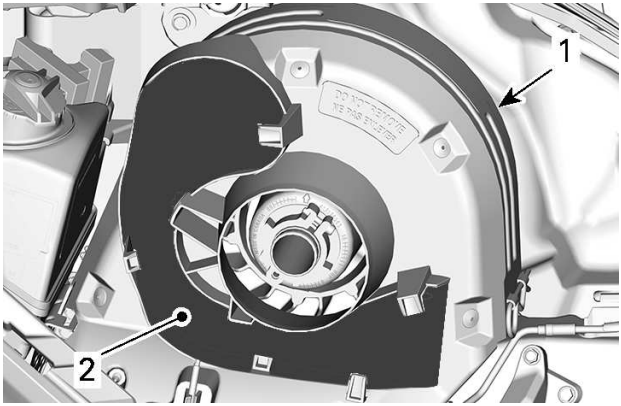


***TYPICAL***

1. *Drive belt guard*
2. *Slot*

Secure in place by sliding it behind the tabs.

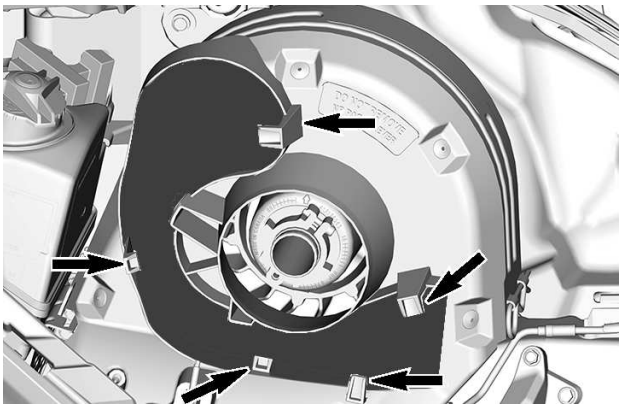

***TYPICAL***

## Tools

A part of the drive belt guard is designed to hold the tools allowing for basic maintenance.

The tools are supplied with the vehicle. They should always be installed in their proper location and orientation.

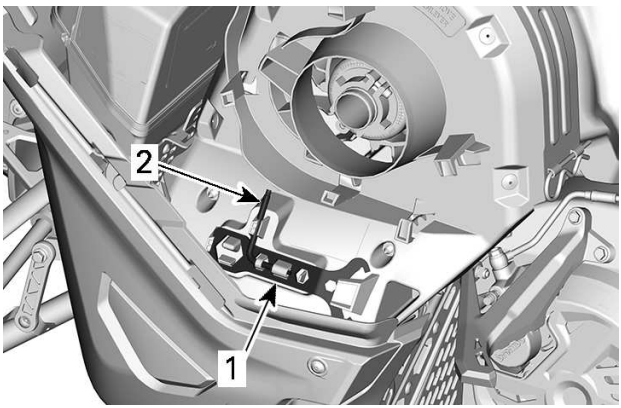


***TYPICAL - DRIVE BELT GUARD TOOLS LOCATION***

1. *Suspension adjustment tool*
2. *Pulley expander and headlight adjustment tool*

Install in the following sequence:

| ⚠ CAUTION |
| --- |
| **Make sure tools are secured properly. Tools may detach and cause damage to rotating parts.** |

1. Slide the suspension adjustment tool open end under retaining tab.

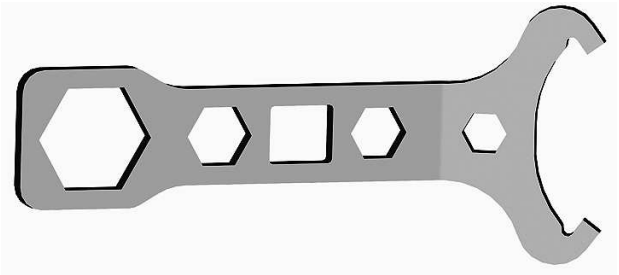

***SUSPENSION ADJUSTMENT TOOL***

2. Press the closed end on the retaining tabs.

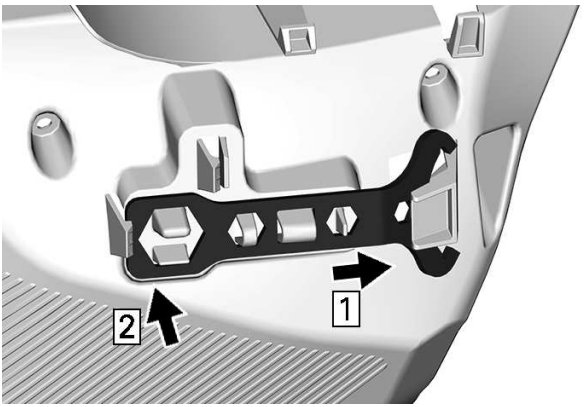


3. Slide the Pulley expander and headlight adjustment tool short end into hole.

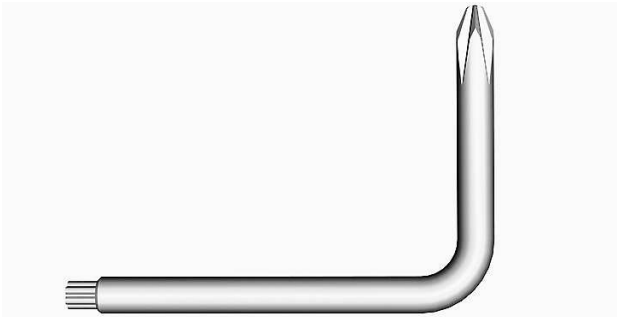

***PULLEY EXPANDER AND HEADLIGHT ADJUSTMENT TOOL***

4. Rotate and clip long end in place.

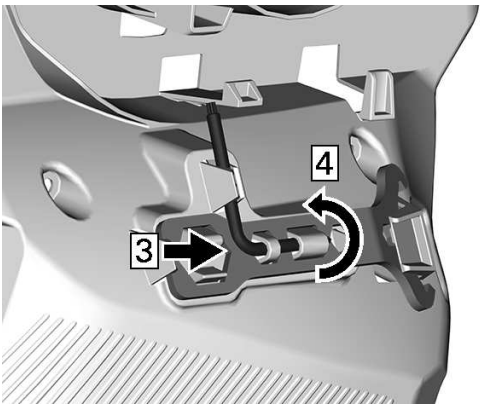


## Rear Storage Compartment

A storage compartment is located at the rear of the seat, above the battery cover.

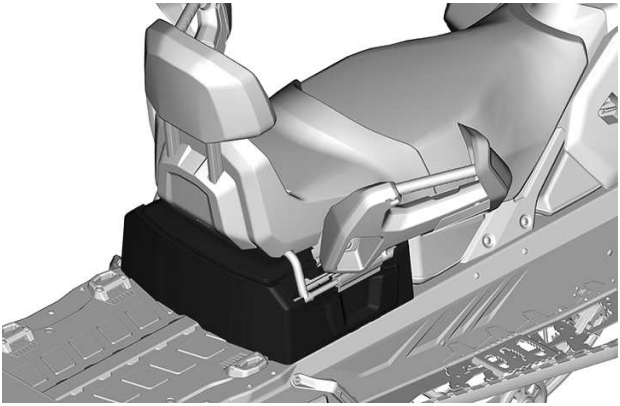

To open, tilt passenger seat.

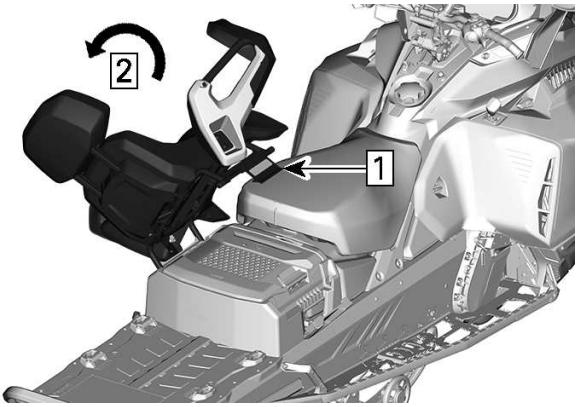


1. *Unlock seat latch*
2. *Tilt passenger seat*

Lift handle.

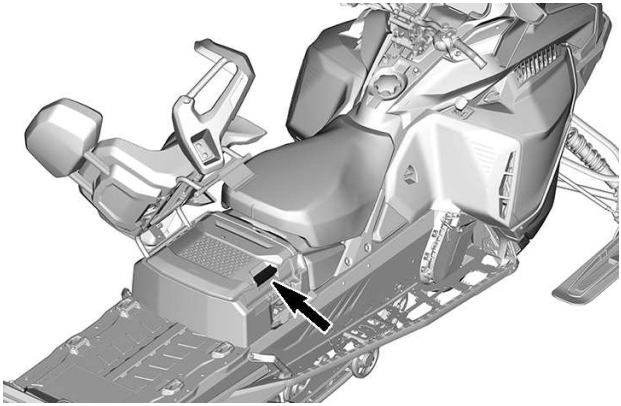

## Cargo Box (if equipped)

The cargo box can contain up to 22 kg (44 lb) on the cover and a total of 48 kg (105 lb) (including weight on cover).

The cargo box is secured by LinQ attachment. To Install, lower box in cargo area.

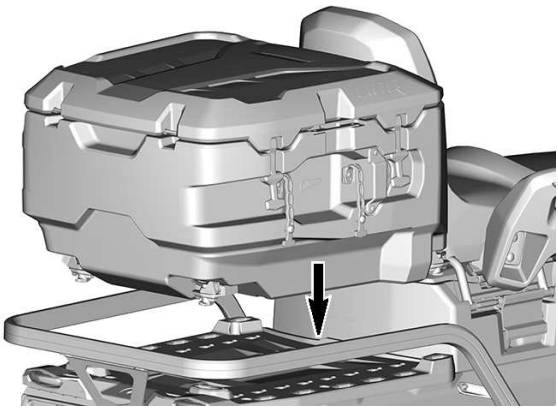

Turn LinQ levers to lock.

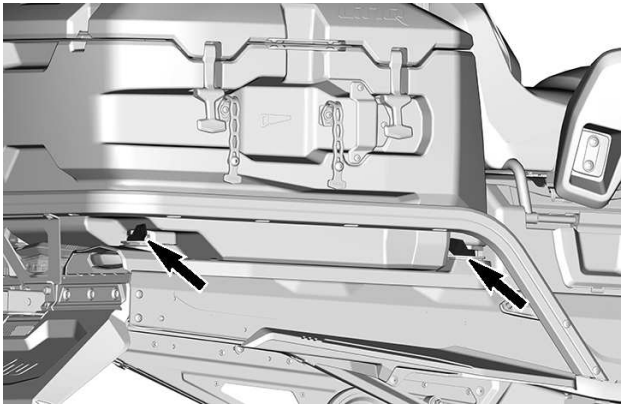

***RH SIDE SHOWN - REPEAT ON LH SIDE***

## Hitch (if equipped)

**NOTE:**
Refer to decal on vehicle for towing weight capacities.

Hitch type availability depends on applicable models and regions.

***Hitch receiver***

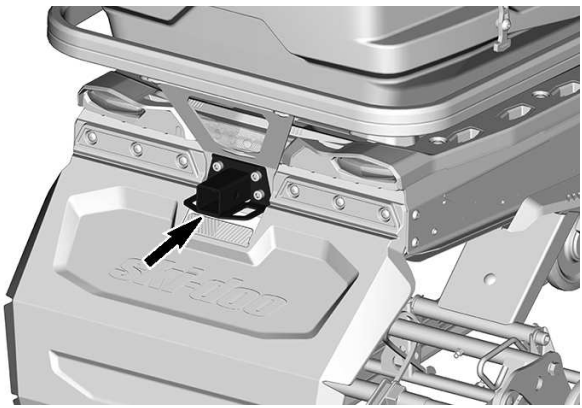

Use the hitch in conjunction with a tow bar to tow an accessory.

***Tongue Hitch***

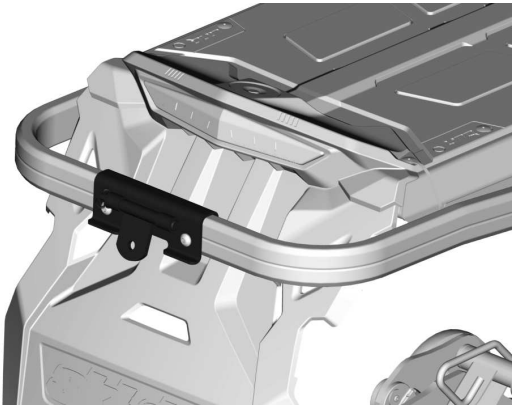

***J-Hook Hitch***

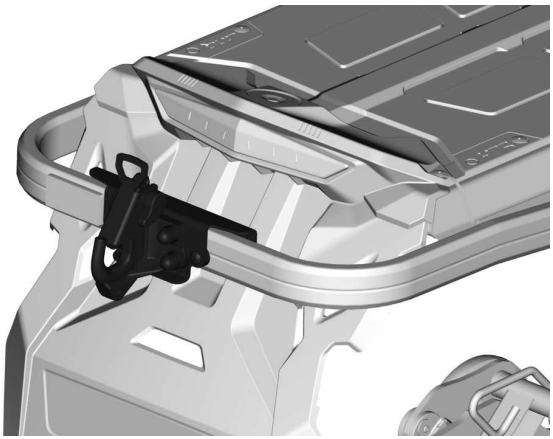

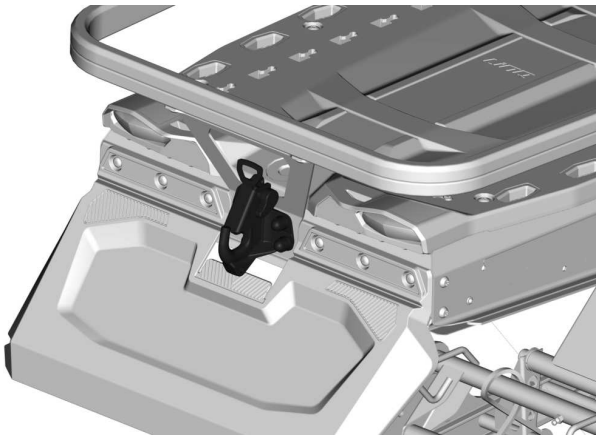

To open the hook, push and turn the handle to retract locking plate.

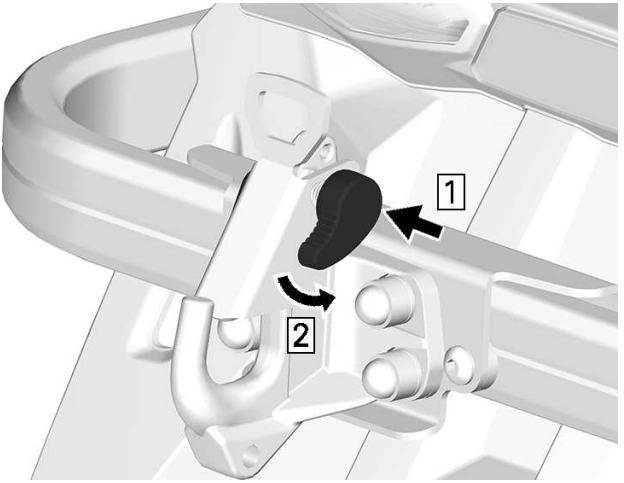


When attaching any accessory, always refer to the manufacturer's recommendations.

**⚠ WARNING**

**Never tow an accessory with a rope. Always use a rigid tow bar. Using a rope would result in a collision between the object and the snowmobile and possibly in a tip over in case of a rapid deceleration or on a downward slope.**

# COMPACT DIGITAL DISPLAY

**⚠ WARNING**

**Reading the digital display can distract from the operation of the vehicle, particularly from constantly scanning the environment.**

**NOTE:**
The digital display is factory preset in Imperial units and in English. To change units or language, contact an authorized BRP snowmobile dealer.

## Display Features

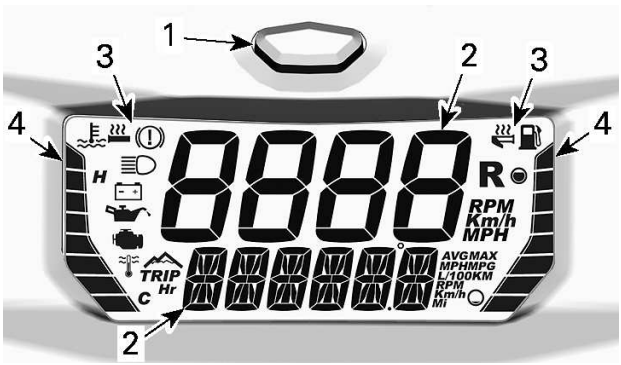


*COMPACT DIGITAL DISPLAY*

1. *Mode button*
2. *Digits*
3. *Icons*
4. *Bar gauges*

The digital display also has a built-in beeper.

***Digital Display***

**⚠ WARNING**

**Never adjust or set functions on the digital display while riding the vehicle.**

To set the displays to your preference, refer to *Display Combination Selection*.

## Upper Display

The upper display is used to display:

– Vehicle speed.
– Engine speed (RPM).

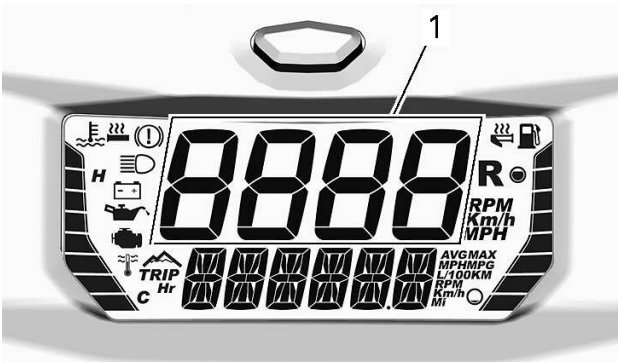


*1. Upper Display*

## Lower Display

The lower display is used to display

– Various information (in combination with the upper display)
– Messages, refer to *Icons and Messages* and *Monitoring System* for details.
– Fault codes, refer to *Monitoring System* for details.

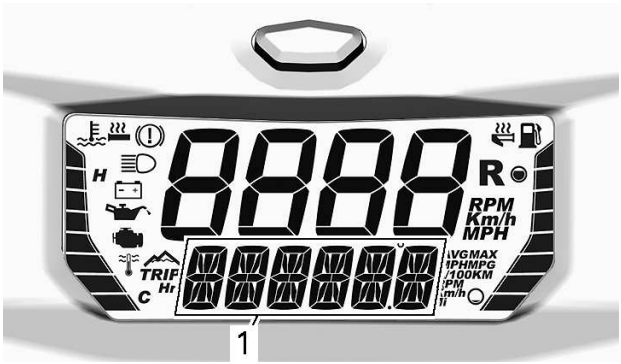


1. *Lower display*

## LH side Bar Gauge

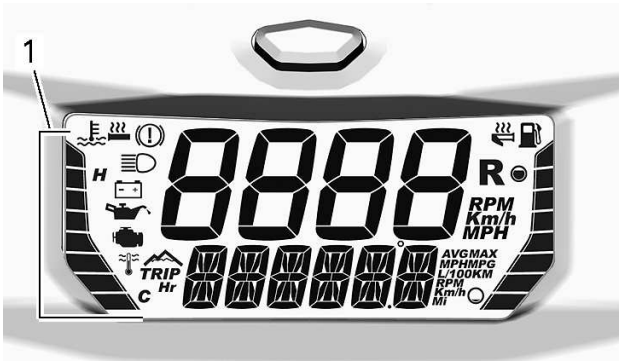


1. *LH bar gauge*

| LH Bar Gauge Information |
|---|
| Engine coolant temperature |
| Heated grips level |

The LH side bar gauge displays the engine coolant temperature except while adjusting the heating elements.

**NOTICE**

**If engine overheats, stop vehicle in a safe place. Refer to TROUBLESHOOTING.**

For details on heated grips operation, refer to *Heated Grips and Throttle Lever Switch* in *Secondary Controls*.

## RH Side Bar Gauge

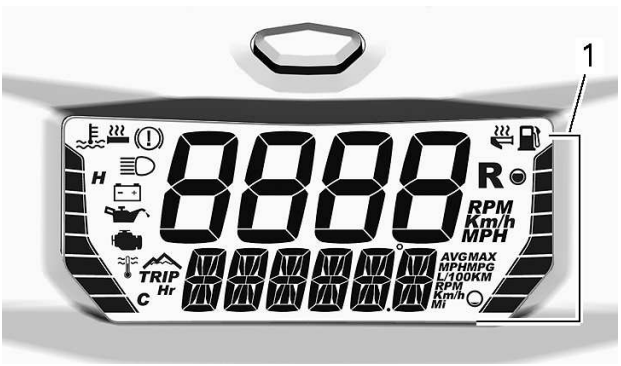


*1. RH bar gauge*

| RH Bar Gauge Information |
|---|
| Fuel level |
| Heated throttle lever level |

The RH side bar gauge displays the fuel level except while adjusting the heated throttle lever.

For details on heated throttle lever operation, refer to *Heated Grips and Throttle Lever Switch* in *Secondary Controls*.

***Display Combination Selection***

The upper and lower displays can be set as combination only. They cannot be set separately.

To scroll through the information options, press and release the mode button repeatedly until the desired information is displayed.

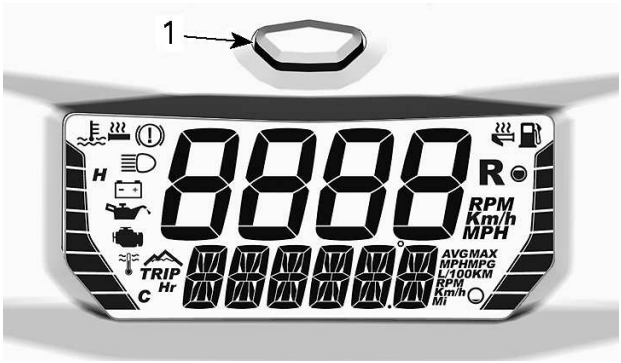


*1. Gauge mode button*

refer to the following table for available combinations.

| Available Display Combinations | | | | |
|---|---|---|---|---|
| | Upper Display | Icon/ Specific information | Lower Display | Icon/ Specific information |
| 1 | Vehicle speed OR Engine RPM | **Km/h** or **MPH** OR **RPM** | Vehicle speed OR Engine speed | **Km/h** or **MPH** OR RPM |
| 2 | Vehicle speed | **Km/h** or **MPH** | Odometer | **Km** or **MI** |
| | | | Trip odometer A(1) | TRIP **Km** or **MI** |
| 4 | | | Trip odometer B (1) (2) | TRIP |
| 5 | | | | **Km** or **MI** |
| 6 | | | Trip hour (1) | TRIP Hr |
| | | | Top speed (1) | MAX **Km/h** or **MPH** |
| 7 | | | Average speed (1) | AVG |
| 8 | | | | **Km/h** or **MPH** |

| | | | | |
|---|---|---|---|---|
| 9 | Vehicle speed | **Km/h** or **MPH** | Top RPM (1) | **MAX** **RPM** |
| 10 | | | Average fuel consumption | **AVG** |
| 11 | | | | **L/100Km** or **MPG** |
| 12 | | | Engine coolant temperature | **E** and **C** or **F** |
| (1) Press and hold the mode button to reset<br>(2) Resetting the trip odometer B also resets the average fuel consumption | | | | |

**NOTE:**
Make sure to display the vehicle speed whenever this information is necessary.

### *Icons and Messages*

For details on malfunction pilot lamps and messages, refer to *Monitoring System*.

| Icon | Beeper | Message Lower Display | Description |
|---|---|---|---|
| — | 2 short beeps | GOOD KEY | At power up, with a good key. Vehicle ready for use. |
| — | — | BREAK-IN | Displayed during break-in period. Refer to *Break-in Period* |
|  | 4 short beeps every 5 minutes | LOW OIL | Engine oil pressure is low. Stop vehicle in a safe place then, check the engine oil level. If at level, the engine may need maintenance. Refer to your authorized BRP snowmobile dealer. |
|  (blinking) | — | — | Low fuel level. No bar left in fuel level display. Replenish fuel tank as soon as possible. |
|  | Long beeps repeating slowly | REVERSE | Reverse is selected. |
| | 3 short beeps | REV. FAIL | Reverse did not engage, try again. |
|  | — | — | High beam headlights are selected. |
| — | — | SPORT | Driving Mode is set to Sport |
| — | — | SPORT OFF | Driving Mode is set back to Standard |

| Icon | Beeper | Message Lower Display | Description |
|---|---|---|---|
| — | — | ECO | Driving Mode is set to ECO |
| — | — | ECO OFF | Driving Mode is set back to Standard |

# 7.2” DIGITAL DISPLAY

## Multifunction Display

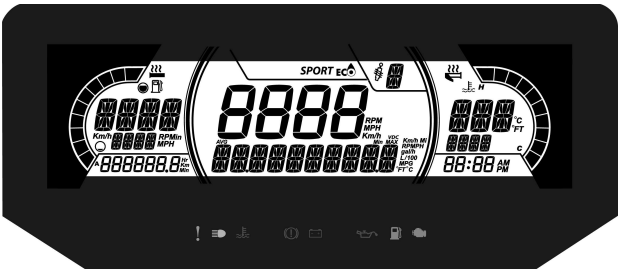


1. Select the upper or center display by using the MENU (M) button on the multifunction switch. Refer to *Secondary Controls* for Menu/ Set button location.
2. While the desired display is flashing, navigate through the display, by using the SET (S) button on the multifunction switch.

   Once the desired information is displayed, press the MENU (M) button or wait 5 seconds to confirm.

   To reset

   – Average speed
   – Top speed
   – Total fuel consumption

   Press and hold the SET (S) button while display is flashing.

***Lower Display***

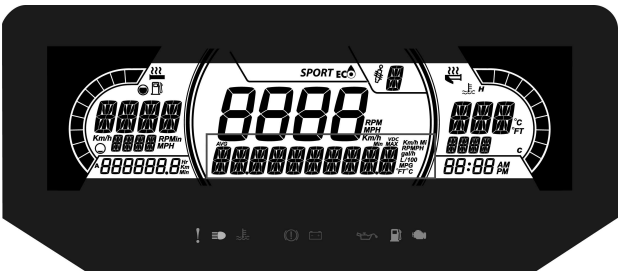


May display the following:

– Settings
– Messages

The SPEED display shows the Maximum and the averaged speed. Hold MENU button for 3 seconds to reset.

***Left Lateral Display***

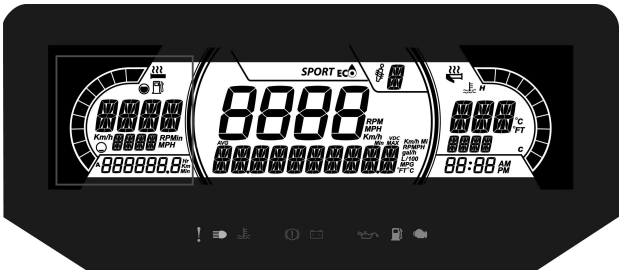


The left lateral display includes:

– Fuel level indicator
– Heated Grip level
– Trip distance A and B (Km or mph)
– Cumulative hours
– Speed
– RPM
– Odometer

***Right Lateral Display***

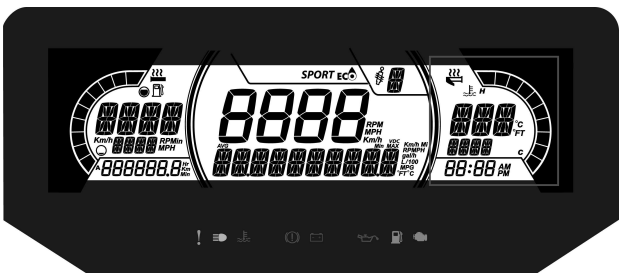


The right lateral display includes:

– Engine Temperature
– Heated throttle indicator
– Clock

### *Central Display*




Display the vehicle speed in Km/h (or MPH) or the RPMs. Refer to *Settings*.

### *ACS Suspension Position Display (if equipped)*

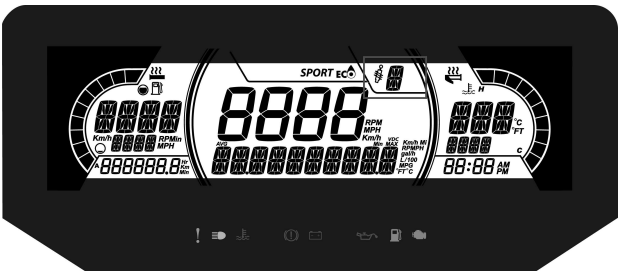


This display shows suspension setting.

The suspension is calibrated from 1 to 5, 1 being the softest setting.

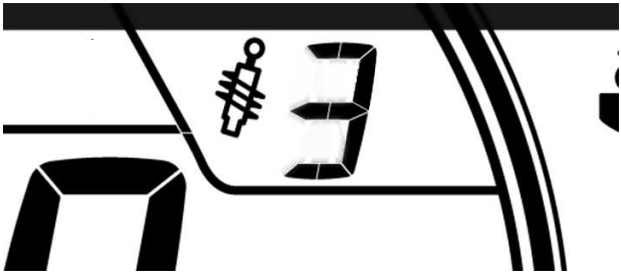

Refer to *TUNE YOUR RIDE* section for proper adjustment procedure.

***Driving Mode Display***

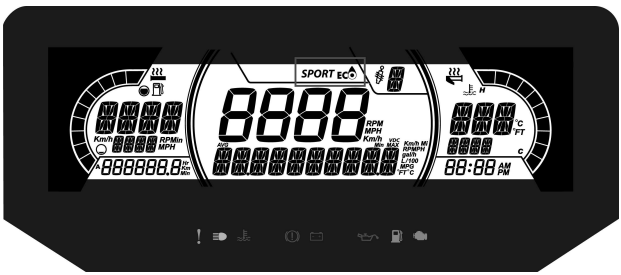


The driving mode display indicates the selected mode of operation:

– SPORT
– ECO
– STANDARD

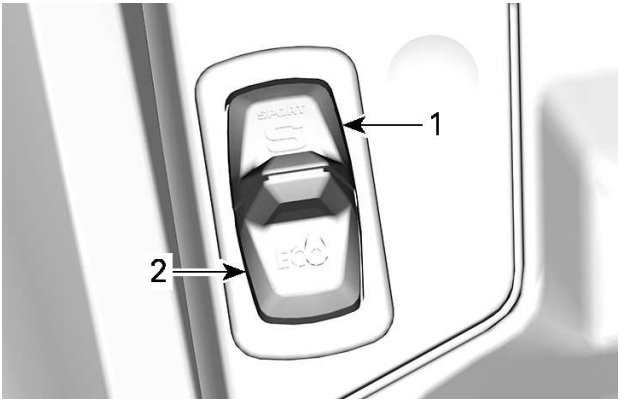


**NOTE:**
When in STANDARD mode, no information is displayed.

A message of the selected mode will be displayed on the lower display at activation and deactivation as follow:

| DRIVING MODE | MESSAGE AT ACTIVATION | MESSAGE AT DEACTIVATION |
|---|---|---|
| Sport | Sport | Sport OFF |
| Eco | Eco | Eco OFF |

## Warning Lamps and Indicators

The following indicator lamps will alert you to a vehicle condition that may become serious. Some lamps will illuminate when starting the vehicle to make sure they work. If any lamps remain on after starting the vehicle, refer to the respective system warning lamp for further information.

**NOTE:**
Some warning indicators appear in the display of the multifunction gauge and function the same as an indicator lamp but do not display when starting the vehicle.

***Telltale Lights - Lower Bar***



| Lights | Description |
|---|---|
|  | ORANGE - Vehicle malfunction |
|  | BLUE - The high beam are selected |
|  | RED - The engine temperature is too high. |
|  | RED - Parking brake is engaged or malfunction of the brake system |
|  | RED - The battery voltage too low or problem with the electrical system |
|  | RED - Low engine oil pressure (if applicable) |
|  | ORANGE - Low fuel level |
|  | ORANGE<br>**Turn on**: Malfunction of the vehicle emissions control system<br>**Blink**: Engine problems, the limp home mode is activated. Have the vehicle serviced immediately. |

***Icons and Indicators - Multifunction Display***

| Icons and Indicators | |
|---|---|
| ***SPORT*** | Denotes SPORT mode is selected. |
|  | Denotes ECO mode is selected. |

## Settings

### *Setup*

Using MENU button, select **SETTINGS** and hold to enter setting menu. Various options are available such as swapping the SPEED and RPM in the Central Display.

### *Unit Selection*

This multifunction gauge is factory preset in metric units but it is possible to change it to imperial units.

Using MENU button, select **UNITS** and hold button to change units.

### *Setting Clock*

Using MENU button, select **CLOCK** and hold to change units.

1. Press MENU button to select clock display.
2. Push and hold MENU button for 1 second.
3. Press MENU button to select 12:00 AM PM or 24:00 time base.
4. Push and hold MENU button or OK button to acknowledge selection.
5. Press MENU button to change hours (hours flash).
6. Push and hold MENU button or OK button to acknowledge hour selection
7. Push MENU button to switch to minutes (minutes flash).
8. Press MENU button to change minutes.

### *Setting Language*

The gauge display language can be changed. Refer to an authorized BRP snowmobile dealer for language availability and to setup the gauge to your preference.

# LARGE PANORAMIC 7.8” WIDE LCD DISPLAY

## Basic Functions

***LCD Display***

## Default Display




## Multifunction Display

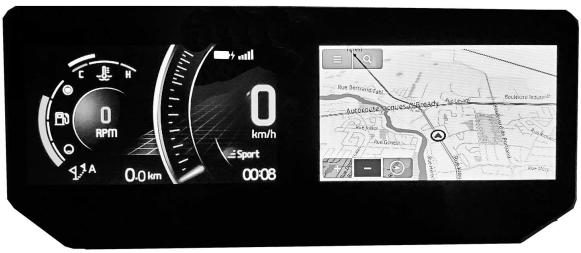


## Left Lateral Display

The left lateral display includes:

– Fuel level indicator
– Engine temperature
– Speedometer
– Tripmeter
– Rpm
– Clock
– Driving modes
– Warning pop-up




***PRINCIPAL VIEW***

– Heated grips
– Heated thumb

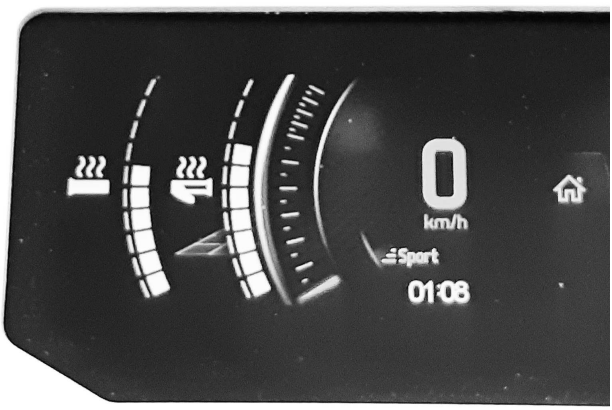


***SECONDARY VIEW - HEATED ELEMENTS***

To select the value to be displayed in the tripmeter;

1. Access the Stats/Trip screen
2. Select and activate the desired set of statistic to be shown (Trip A, Trip B or Total)

## Right Lateral Display

The right lateral display includes:

– Tachometer
– Audio volume
– Audio output indicator
– Menu
  – BRP Connect
  – Phone
  – Statistics
  – Audio
  – Settings




***STATS/TRIPS VIEW***




*SETTINGS VIEW*

## Navigating in the Digital Display

**⚠ WARNING**

**Reading or tampering with the multifunction gauge can distract you from the operation of the vehicle, particularly from constantly scanning the environment. Always pay attention to road conditions, ensure your environment is clear and free from obstacles. Furthermore, when riding, only glance at the multifunction gauge briefly to maintain awareness of road conditions.**

The multifunction gauge includes analog gauges (speedometer and tachometer), indicator lamps and an infotainment center with a digital screen.

We recommend you practice selecting some functions on the infotainment center before getting on the road. You will get used to them and they will be easier to use on the road.

Use the rotating control to control the display functions. Refer to *Rotary Control* in *Secondary Controls*.

Pressing the center knob will get the Menu selection in the right screen, in this order:

– BRP Connect
– Phone
– Statistics
– Audio
– Settings

When an icon is selected, its related screen will appear.




***SETTINGS VIEW***

When an item is selected, this sets the item to the current value.

***Warning Lamps and Indicators***

The following indicator lamps will alert you to a vehicle condition that may become serious. Some lamps will illuminate when starting the vehicle to make sure they work. If any lamps remain on after starting the vehicle, refer to the respective system warning lamp for further information.

**NOTE:**
Some warning indicators appear in the display of the multifunction gauge and function the same as an indicator lamp but do not display when starting the vehicle.

## Telltale Lights - Lower Bar



| Lights | Description |
|---|---|
|  | ORANGE - Vehicle malfunction |
|  | BLUE - The high beam are selected |
|  | RED - The engine temperature is too high. |
|  | RED - Parking brake is engaged or malfunction of the brake system |
|  | RED - The battery voltage too low or problem with the electrical system |
|  | RED - Low engine oil pressure (if applicable) |
|  | ORANGE - Low fuel level |
|  | ORANGE<br>**Turn on**: Malfunction of the vehicle emissions control system<br>**Blink**: Engine problems, the limp home mode is activated. Have the vehicle serviced immediately. |

## Icons and Indicators - Multifunction Display

| Icon | Description |
|---|---|
|  | Smartphone Network connection |
|  | Bluetooth device |
|  | Smartphone battery level indicator |
|  | Helmet pairing indicator |
|  | Fuel indicator |
|  | Temperature indicator |
|  | Helmet audio output |

## Settings

***Menu***

## BRP Connect




Before using BRP Connect, the BRP GO! app must be downloaded to the phone. The app can be downloaded from the Apple App Store or Google Play Store via a simple search. Not all phones are compatible.

Visit our website for more details

**www.brpconnecttutorial.com**

**NOTE:**
The smartphone must be connected via Bluetooth **and** with a USB cable to the USB port located in the glove box.

User's personal data will be deleted from the cluster when phone pairing is deleted.

User agree that personal data (contact list and call history) be transferred to the cluster when smartphone is connected.

Contact list and call history are stored in cluster permanently. To delete these information you must un-pair your smartphone or overwrite using another smartphone.

**NOTE:**
The apps can also reach directly by pressing the APPS button located at the bottom of the rotary control.

## Phone




The phone menu is to access:

– The phone history
– The phone contact list

**NOTE:**
To have access to the Phone menu, a phone and rider helmet must be paired. Refer to *Pair your Smartphone Via Bluetooth*.

## Statistics




The Statistics menu is used to get :

– Trip distance information
– Trip elapsed time information
– Instant fuel consumption
– Average fuel consumption
– Maximum speed
– Average speed

3 sets of statistics are kept in memory. Each set of statistic can be reset independently.

Press knob to enter into the stats/trip screen.

Move the knob left or right to select another trip.

Press the knob to exit this screen and validate your selection.

## Audio

Allow to control volume and music listened in the helmet audio system.

Gives also song informations when available.

## Settings




The Settings menu is to:

- Adjust clock
- Pair Bluetooth devices
  - Phone
  - Rider headset
  - Passenger headset
- Adjust the display (brightness and Mode (AUTO/DAY/NIGHT)
- Adjust the units (Imperial/Metric)
- Set the language
- Get information about firmware version and device regulatory compliance
- Show vehicle fault codes.

## Pairing your Smartphone Via Bluetooth

***On the Vehicle***

1. Short press the **rotary control knob** to access menu.
2. Go to "Settings" and move the knob **RIGHT**.
3. Select "Bluetooth" and move the knob **RIGHT**.
4. Select "Phone" and move the knob **RIGHT**.
5. Select "Add Phone" and press the knob **RIGHT**.

Bluetooth is now visible.

***On the Phone***

1. Activate your phone's bluetooth function.

   Refer to your manufacturer's user guide for detailed procedure.
2. Choose "BRP Connect"
3. A confirmation number will appear on your phone screen and the vehicle gauge screen. Make sure these numbers match.
4. Press Pair on your phone and select the green check mark on the vehicle gauge
5. Allow Contacts and Favorite Sync on your phone

## Pairing a Helmet

To pair a helmet, go to the “Settings” page and select “Add helmet”.

## BRP GO! App

Follow these steps to setup your smartphone with BRP Connect.

***1) Download the BRP GO! Smartphone App***

Download the BRP GO! app via the App Store for Apple™ or the Google™ Play Store for Android.

***2) Download Apps Compatible With BRP Connect***

Visit our website to know more about the compatible apps. These apps will improve your riding experience. Some apps may require additional purchase to be compatible with the system or may require additional devices to be used.

**www.brpconnecttutorial.com**

***3) Connect your smartphone using your charging / data transfer cable***

It is recommended to use an original charging cable from the smartphone OEM to optimize transfer between the phone and the vehicle. Use the front USB port.

1. Unlock your phone screen
2. Connect your phone charging cable
3. A checkmark will appear on your phone screen once the connection is done.

***4) Access your Apps***

Quick press the **JOYSTICK** to access Menu.

Push the joystick **UP** to select "Launch BRP Connect" and push the joystick **RIGHT**.

Select the app you would like to use and press the **JOYSTICK**.

– To leave the app, long press the **JOYSTICK**.
– To return to the Main Menu, press the BRP Connect Button.

**NOTE:**
The apps can also reach directly by pressing the APPS button located at the bottom of the rotary control.

## Quick Tour of the BRP GO! App

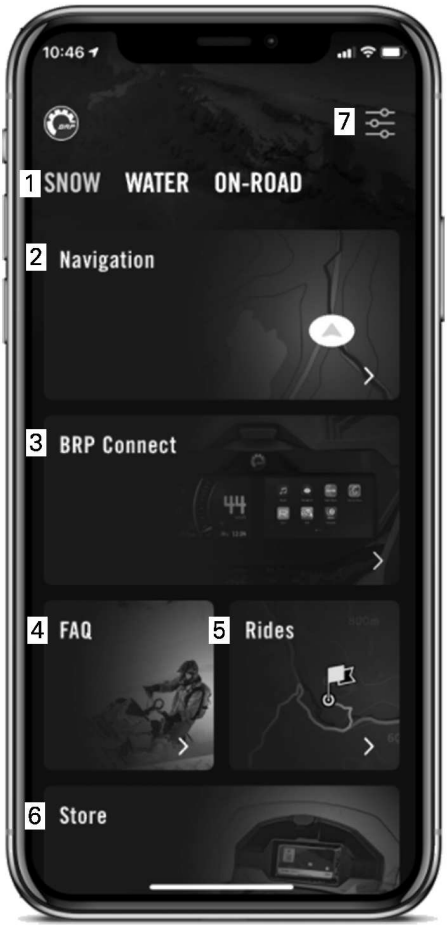


1. Playground: Select your playground to see content related to your vehicle. For Ski-Doo snowmobiles, select the Snow playground.

2. Navigation: Access all the navigation features of the app such as route planning, turn-by-turn navigation, friends location, offline navigation, and more. You can access thousands of snowmobile trails across North America and Europe on the map.
3. BRP Connect: See the list of compatible apps that can be used on the vehicle's display. You can also access from there the Vehicle Connection Guide to help you connect your phone to your vehicle's display.
4. FAQ: This link takes you to answers of common questions asked by riders like you. An internet connection is required.
5. Rides: Easily access your planned and completed rides made with the Navigation features of the BRP GO! app.
6. Store: This link takes you to the online store of your vehicle. An internet connection is required.
7. Settings: Manage your profile and your account settings.

## Messages in Multifunction Gauge

Important information about vehicle condition is displayed on the multifunction gauge. When starting the engine, always look at the gauge for any indicator lamps or special messages.

| Icon | MESSAGE/ WARNING | CAUSE | WHAT TO DO |
|---|---|---|---|
| NA | BAD KEY | Defective key | Contact an authorized BRP snowmobile dealer. |
| | WRONG KEY | Wrong key | Use the right key for the vehicle or contact an authorized BRP snowmobile dealer. |
| | HIGH ENGINE TEMPERATURE | Engine is overheating | – Stop and wait for engine to cool off.<br>– Check for leaks.<br>– Check coolant level and adjust (see *Maintenance procedures*). |
| | LIMP HOME MODE | Important engine management component | * Have the vehicle transported to the nearest authorized BRP snowmobile dealer. |

| Icon | MESSAGE/ WARNING | CAUSE | WHAT TO DO |
|---|---|---|---|
|  | ⚠ LOW OIL - STOP ENGINE | Low oil pressure | – Check for oil leaks.<br>– Check oil level and adjust (see *Maintenance procedures*. |
| A combination of two different warnings can occur. | | | |
| NA = Not applicable | | | |

* BRP recommends having the vehicle transport when in LIMP HOME. If you operate the vehicle in LIMP HOME, avoid abrupt maneuvers and immediately go to the nearest authorized BRP snowmobile dealer to have your vehicle serviced before riding again. In LIMP HOME, the engine RPM is limited and therefore the vehicle speed.

Important information messages can also be displayed temporarily to assist indicator lamps.

When a digital warning appears, it will show the warning for 6 seconds and then the warning will disappear for 60 seconds. During the 60 seconds, the small digital indicator will flash. This sequence will be repeated three times and then will stop for 15 minutes. During the 15 minutes only the indicator lamps will be activated.

# FUEL

## Fuel Requirements

**NOTICE**

**Always use fresh gasoline. Gasoline will oxidize; the result is loss of octane, volatile compounds, and the production of gum and varnish deposits which can damage the fuel system.**

Alcohol fuel blending varies by country and region. Your vehicle has been designed to operate using the recommended fuels, however, be aware of the following:

- Use of fuel containing alcohol above the percentage specified by government regulations is not recommended and can result in the following problems in the fuel system components:
  - Starting and operating difficulties.
  - Deterioration of rubber or plastic parts.
  - Corrosion of metal parts.
  - Damage to internal engine parts.
- Inspect frequently for the presence of fuel leaks or other fuel system abnormalities if you suspect the presence of alcohol in gasoline exceeds the current government regulations.
- Alcohol blended fuels attract and hold moisture which may lead to fuel phase separation and can result in engine performance problems or engine damage.

***Recommended Fuel***

Use unleaded gasoline containing MAXIMUM 10% ethanol. The gasoline must have the following minimum octane requirements:

| Fuel type | Engine | Minimum octane rating |
|---|---|---|
| Fuel with NO ethanol | 600 ACE<br>900 ACE | 87 AKI (RON+MON)/2<br>92 RON |
| | 900 ACE Turbo | 91 AKI (RON+MON)/2<br>95 RON |
| Fuel which may contain up to 10% MAX ethanol | 600 ACE<br>900 ACE<br>900 ACE Turbo | 91 AKI (RON+MON)/2<br>95 RON<br>E10 |

**NOTICE**

**Never experiment with other fuels. Engine or fuel system damages may occur with the use of an inadequate fuel.**

**NOTICE**

**Do NOT use fuel from fuel pumps labeled E85.**

Use of fuel labeled E15 is prohibited by U.S. EPA Regulations.

## Fueling Procedure

**⚠ WARNING**

**Always stop engine before refueling.**

**⚠ WARNING**

**Fuel is flammable and explosive under certain conditions.**
**Never use an open flame to check fuel level.**
**Never smoke or allow flame or spark in vicinity.**
**Always work in a well-ventilated area.**

**NOTE:**
Do not sit or lean on seat when fuel tank cap is not properly installed.

1. Stop engine.
2. Have operator and passenger get off vehicle.

**⚠ WARNING**

**Do not allow anyone seated on the vehicle while fueling.**

3. Unscrew slowly the fuel reservoir cap counterclockwise to stabilize pressure before removing it.

**NOTE:**
A short whistling sound is normal.

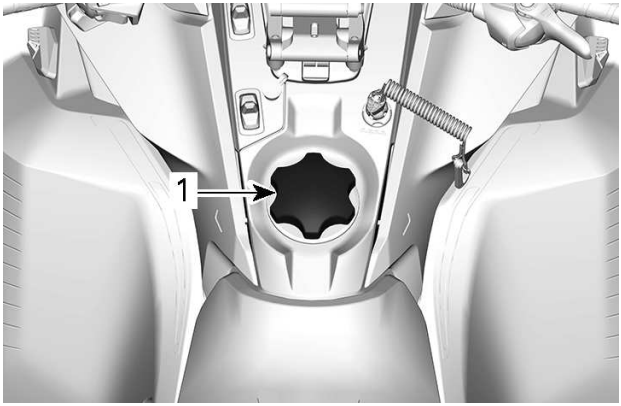


***TYPICAL***

*1. Fuel tank cap*

4. Insert the spout into the filler neck.
5. Pour fuel slowly so that air can escape from the tank and prevent fuel flow back. Be careful not to spill fuel.
6. Stop filling when the fuel reaches the bottom of filler neck. **Do not overfill.**

**⚠ WARNING**

**Never top up the fuel tank before placing the vehicle in a warm area. As temperature increases, fuel expands and may overflow.**

7. Fully tighten fuel reservoir cap clockwise.

**⚠ WARNING**

**Always wipe off any small fuel spillage from the vehicle. If a major spillage occurs, remove side panels to remove fuel vapors from engine compartment before starting.**

**NOTE:**
Do not sit or lean on seat when fuel tank cap is not properly installed.

# ENGINE OIL

## Recommended Oil

Rotax® engines were developed and validated using the XPS™ oil. BRP recommends the use of its XPS engine oil or an equivalent at all time. Do not add any oil additives to the recommended engine oil. Damages caused by the use of an oil not suitable for the engine or by adding of an oil additives may not be covered by the BRP Limited Warranty.

| **XPS RECOMMENDED Engine Oil** |
| --- |
| 4T 0W40 Synthetic oil |
| IF THE RECOMMENDED XPS ENGINE OIL IS NOT AVAILABLE |
| Use a 0W40 4-stroke SAE synthetic engine oil meeting or exceeding the following lubricant industry specifications.<br>Always check the API service label certification on the oil container, it must contain at least the indicated standard.<br>– API service classification SN |

# DRIVING MODES

**⚠ WARNING**

**Whenever changing operating mode, make sure to maintain situational awareness while riding.**

## ECO Mode (Fuel Economy Mode)

When ECO mode is selected (fuel economy mode), vehicle torque and speed are limited whereby an optimal cruising speed is maintained in order to reduce fuel consumption.

Once activated, ECO mode will remain active until it is deactivated by the operator.

## Standard Mode

When in Standard mode, no indicator is in the multifunction gauge.

## Sport Mode

**⚠ WARNING**

**Ensure passenger is advised to hold on tightly before activating Sport mode. Sport mode provides increased acceleration.**

When selected, Sport mode provides for instant throttle response and more rapid accelerations than Standard or ECO mode.

Once activated, Sport mode will remain active until it is deactivated by the operator.

A message of the selected mode will be displayed at activation and deactivation as follow:

| Operating mode | Message at Activation |
|---|---|
| Sport | SPORT MODE |
| Standard | STANDARD MODE |
| Eco | ECO MODE |

## Navigating the Driving Modes

Use ECO/ Standard/ Sport Mode switch to navigate between power levels, from ECO (reduced power) to Standard (full power) to Sport (increased response).

To increase power, press the switch upwards. To decrease power, press the switch downwards.

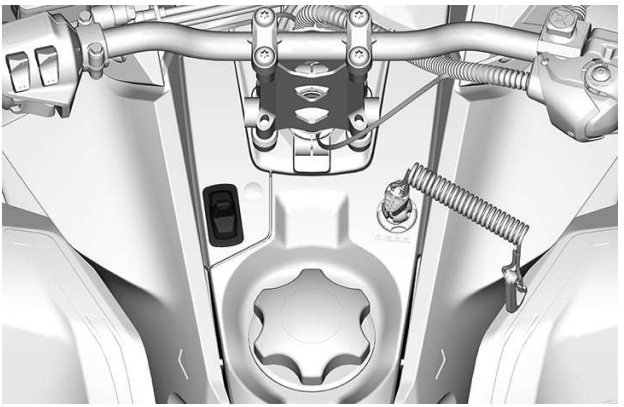

To activate Standard mode when in Sport mode, press bottom end of switch once.

To activate ECO mode when in Sport mode, press bottom end of switch twice.

To activate ECO mode when in Standard mode, press bottom end of switch once.

**⚠ WARNING**

**Ensure passenger is advised to hold on tightly before activating Sport mode. Sport mode provides increased acceleration.**

To activate Sport mode when in Standard mode, press top end of switch once.

To activate Sport mode when in ECO mode, press top end of switch twice.

To activate Standard mode when in ECO mode, press top end of switch once.

**⚠ WARNING**

**When adjusting modes, be sure to maintain situational awareness of other snowmobiles, obstacles, or persons.**

# BREAK-IN PERIOD

## Operation During Break-In

***Engine***

During the break-in period:

– Avoid prolonged full throttle operation.
– Avoid sustained accelerations.
– Avoid prolonged cruising speeds.
– Avoid engine overheating.

However, brief accelerations and speed variations contribute to a good break-in.

During a predetermined period, the engine management system controls some engine parameters.

The duration is based on fuel volume. It will take approximately two fuel tanks to complete the break-in.

During this period:

– The engine performance and behavior will not be optimal.
– The fuel and oil consumption will be higher.

***Drive Belt***

A new drive belt requires a break in period of 50 km (30 mi).

During the break-in period:

– Avoid strong acceleration and deceleration.
– Avoid pulling a load.
– Avoid high speed cruising.

If the vehicle creeps, lower the drive belt height from the preliminary setting. Refer to *Drive Belt* in *maintenance procedure*.

# BASIC PROCEDURES

## Engine Starting Procedure

***Procedure***

1. Apply parking brake.
2. Recheck throttle control lever operation.
3. Put your helmet on.
4. Ensure that the tether cord cap is installed on the engine cut-off switch and that the cord is attached to your clothing eyelet.
5. Ensure that the emergency engine stop switch is in the ON position (up).

| ⚠ WARNING |
| --- |
| **Never depress throttle while starting engine.** |

6. Release parking brake.

**NOTE:**
For an initial cold start, do not release parking brake. Perform the *vehicle warm-up* procedure as explained below.

7. Depress the START button to engage the electric starter and start the engine. Release button immediately when engine has started.

| *NOTICE* |
| --- |
| **Do not engage electric starter for more than 10 seconds at a time. A rest period should be observed between the cranking cycles to allow electric starter to cool down.** |

## Emergency Starting

Do not attempt any emergency starting procedure. Have the battery charged or replaced.

## Vehicle Warm-Up

Before every ride, vehicle has to be warmed up as follows.

1. Start engine as explained in *ENGINE STARTING PROCEDURE (PAGE 231) ENGINE STARTING PROCEDURE* above.
2. Allow engine to warm up one or two minutes at idle speed.

**NOTE:**
Engine will shut down after approximately 12 minutes of idling.

3. Disengage parking brake.
4. Apply throttle until drive pulley engages. Drive at low speed the first two or three minutes.

**NOTICE**

**If vehicle does not move when throttle is applied, stop engine, remove tether cord cap from the engine cut-off switch, then do the following.**

- **Check if skis are stuck on the ground. Lift one ski at a time by the handle, then put it down.**
- **Check if track is stuck on the ground. Lift rear of snowmobile enough to clear track from the ground, then drop.**
- **Check rear suspension for hard snow or ice accumulation that could interfere with track rotation. Clean the area.**
- **Validate that transmission is engaged (not in neutral).**

**⚠ CAUTION**

**Beware of injuries by using proper lifting techniques, notably using your legs force. Do not attempt to lift the rear of vehicle if it is above your limits.**

**⚠ WARNING**

**Make sure tether cord cap is removed before standing in front the vehicle, getting close to the track or rear suspension components.**

**NOTE:**
Warm-up is electronically controlled. During this period (up to 10 minutes depending on ambient temperature), engine RPM is limited.

## Shifting in High or Low range

This transmission is designed to accept shifting while moving. However, shifting while the engine is under heavy load is not recommended.

**NOTICE**

**Shifting at a speed faster than 30 km/h (19 MPH) may cause serious damage to the gearbox.**

***High Range***

This position selects the high speed range of the gearbox. It is the normal driving speed range. It allows the vehicle to reach its maximum speed.

***Low Range***

This position selects the low speed range of the gearbox. It allows the vehicle to move slowly with maximum engine torque.

Low range should be used whenever:

– Pulling a cargo carrier or accessory
– Hauling a load
– Crossing obstacles
– Climbing onto trailer
– Hill climbing

It is also recommended to use low range if driving for prolonged periods at speeds under 24 km/h (15 MPH).

| *NOTICE* |
| --- |
| **Use the low speed range to pull a cargo carrier, carry heavy cargo, go over obstacles or drive uphill and downhill.** |

## Shifting in Reverse

1. Bring vehicle to a complete stop.
2. Apply and hold brake. Remain seated, refer to *Rider Position (Reverse Operation)* in *Riding the vehicle* for posture information.
3. With engine at idle speed, select reverse (R) gear using the reverse lever or Start / RER button.

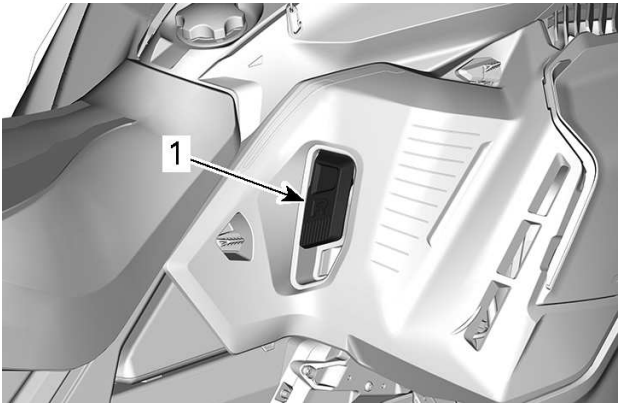


*1. Reverse lever*

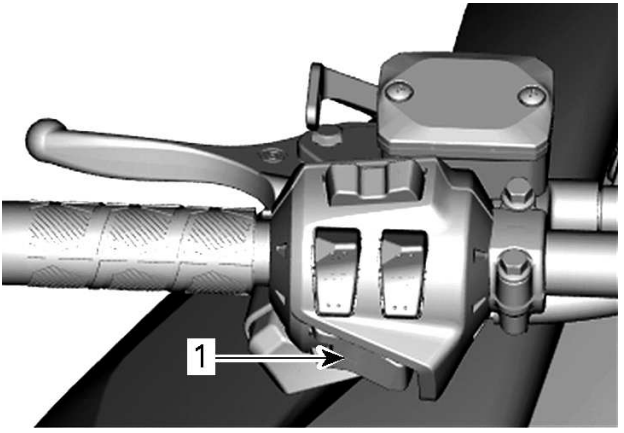


*1. Start / RER button*

4. Wait until reverse beeper sounds, then gently depress throttle lever.

**⚠ WARNING**

**The reverse speed is not limited. Always proceed with caution as fast reverse could result in loss of vehicle stability. Come to complete stop before activating the reverse. Always remain seated and apply the brake before shifting. Ensure the path behind is clear of obstacles or bystanders before proceeding.**

## Shifting in Forward from Reverse

1. Bring vehicle to a complete stop.
2. Apply and hold brake.
3. Press and release the RER button or reverse lever.
4. Apply throttle slowly and evenly. Allow drive pulley to engage then accelerate carefully.

## Shutting Off the Engine

Release throttle lever and wait until engine has returned to idle speed.

Shut off the engine using either the emergency engine stop switch or by pulling off the tether cord cap from the engine cut-off switch.

**⚠ WARNING**

**Always remove the tether cord cap from engine cut-off switch when vehicle is not in operation in order to prevent accidental engine starting or to avoid unauthorized use by children or others or theft.**

# RIDING CONDITIONS AND YOUR SNOWMOBILE

## Altitude

At factory, your snowmobile was calibrated to be used within an altitude range (relative to sea level).

A new snowmobile has a tag attached to the handlebar indicating its calibration. Refer to *Safety Information on Vehicle*.

If for any reason you don't know your snowmobile calibration, contact an authorized BRP snowmobile dealer.

If your snowmobile is to be used at an altitude outside the specified range, have it calibrated accordingly by an authorized BRP snowmobile dealer.

**NOTICE**

**An inappropriate altitude calibration would decrease performance and may cause serious damage to the snowmobile.**

## Temperature

The engine management of these engines provides the optimum air/fuel ratio for all temperatures.

## Hard Packed Snow

All models covered in this guide which are equipped with a minimum track profile of 44 mm (1.75 in) are built for deep snow conditions and should never be used during a prolonged period of time in marginal or hard packed snow conditions.

In the event you have to ride in these types of conditions:

- Avoid exceeding a speed of 70 km/h (45 mph) in all conditions
- Avoid hard acceleration (over 75% of throttle)
- Ice scratchers should be applied
- Engine temperature should not exceed 75% on the temperature gauge.

**NOTICE**

**Running these types of tracks at high speed on a trail, on hard packed surfaces or on ice puts more stress on the lugs, which tends to heat up as a result. It also could drastically reduce the life of specific wear parts. To avoid potential degradation, delamination or damages to the track and wear parts, reduce your speed and minimize the distance that is being ridden on these types of surfaces.**

**Vehicles Equipped with Ice Scratchers**

Ice scratchers are equipped on the vehicle to increase engine cooling efficiency, to lubricate and to cool track clips and sliders. They must be used whenever on ice, hard packed snow, or any conditions that do not lift enough snow particles into the rear suspension and the tunnel.

**NOTICE**

**Although it is not recommended to ride a snowmobile equipped with a high lug profile track on trails or hard packed snow conditions, it is highly suggested to combine idler wheels and ice scratchers on a vehicle used in these conditions.**

**IMPORTANT**

Ridding in these trail conditions puts the reliability of the track and its warranty at risk

If equipped with the following track profile heights, never exceed the recommended sustained vehicle speeds listed.

| Track Profile Height | Maximum Sustained Speed |
|---|---|
| 57 mm (2.25 in)<br>60 mm (2.36 in) | 110 km/h (70 MPH) |
| 64 mm (2.52 in)<br>75 mm (3 in) | 95 km/h (60 MPH) |

# TUNE YOUR RIDE

Snowmobile handling and comfort depend upon multiple adjustments.

**⚠ WARNING**

**Suspension adjustment could affect vehicle handling. Always take time to familiarize yourself with the vehicle's behavior after any suspension adjustment have been made. Always adjust LH and RH suspension components to the same setting.**

Choice of suspension adjustments vary with carrying load, operator's weight, personal preference, riding speed and field condition.

**NOTE:**
Some adjustments may not apply to your snowmobile.

**⚠ WARNING**

**Before proceeding with any suspension adjustment, remember:**

- **Park in a safe place.**
- **Remove the tether cord cap from the engine cut-off switch.**
- **Use appropriate lifting device or have assistance to share lifting stress. If a lifting device is not used, use proper lifting techniques, notably using your legs force.**
- **Do not attempt to lift the front or rear of vehicle if it is above your limits.**
- **Support front of vehicle off the ground with a suitable device before adjusting suspension.**
- **Support rear of vehicle off the ground with a wide-base snowmobile stand with a rear deflector panel.**
- **Make sure support device is stable and secure.**

The best way to set up the suspension is to customize each adjustment one at a time. Various adjustments are interrelated. It may be necessary to readjust center spring after adjusting front springs for instance. Test run the snowmobile under the same conditions; trail, speed, snow, operator riding position, etc. Proceed methodically until you are satisfied.

Following are guidelines to fine-tune suspension. Use suspension adjustment tool provided in the tool kit.

## Rear Suspension Adjustments

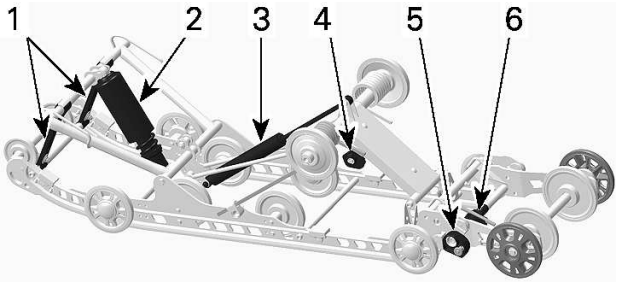


***SC-5U - ADJUSTABLE COMPONENTS***

1. *Stopper straps*
2. *Center spring*
3. *Rear shock absorber*
4. *Rear springs*
5. *Extension stabilizer cam*
6. *Extension spring cam*

| NOTICE |
| --- |
| **Whenever adjusting rear suspension, check track tension and adjust if necessary.** |

***Stopper Strap***

Stopper strap length has an effect on the amount of weight the center spring has to carry especially during acceleration, therefore on the front end uplift.

Stopper straps length also has an effect on center spring travel.

| NOTICE |
| --- |
| **Whenever stopper strap length is changed, track tension must be checked.** |

| Action | Result |
| --- | --- |
| Increasing stopper strap length | Lighter ski pressure under acceleration |

| Action | Result |
|---|---|
| | More center spring travel |
| | More bump absorption capability |
| Decreasing stopper strap length | Heavier ski pressure under acceleration |
| | Less center spring travel |
| | Less bump absorption capability |

**NOTE:**
Stopper strap could be set to position 4, 5 and 6. Below are illustrations for position 4 and 6. Smaller numbers correspond to a longer strap setting.

## *NOTICE*

**Do NOT set to a position lower than 4. It could lead to center shock damage.**

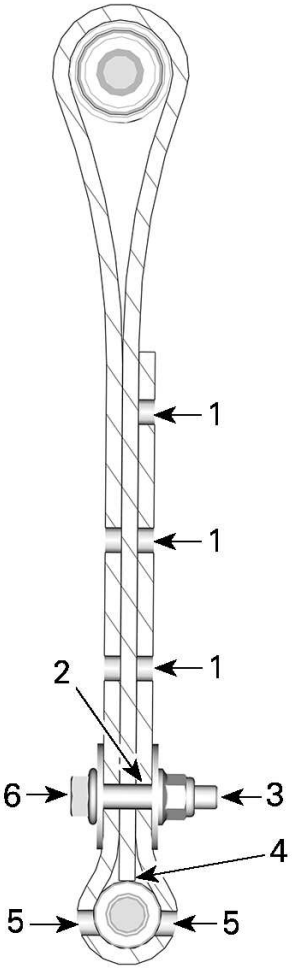


***STOPPER STRAP POSITION 4 (4TH HOLE, FACTORY SETTINGS)***

1. *Free holes*
2. *4th hole from end*
3. *Towards rear*
4. *Tip of strap touching strap axis*
5. *Two holes left open between screw head and nut*
6. *Towards front*

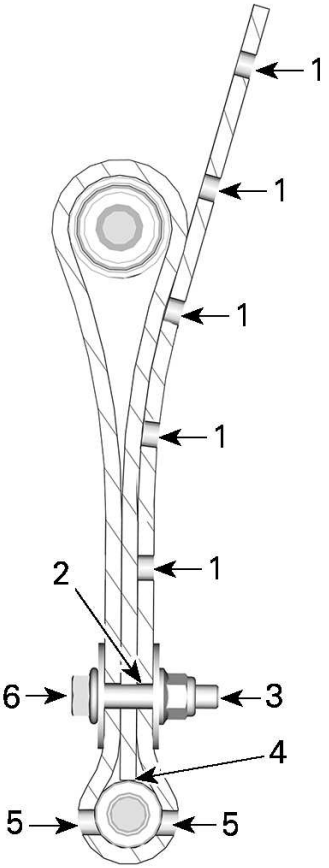


***STOPPER STRAP POSITION 6 (6TH HOLE)***

1. *Free holes*
2. *6th hole from end*
3. *Towards rear*
4. *Tip of strap touching strap axis*
5. *Two holes left open between screw head and nut*
6. *Towards front*

Always install the stopper strap bolt as close as possible to the lower shaft.

**NOTE:**
Decreasing the stopper strap length may reduce comfort.

When operating the snowmobile in deep snow, it may be necessary to vary stopper strap length and/or riding position, to change the angle at which the track rides on the snow. Operator's familiarity with the various adjustments as well as snow conditions will dictate the most efficient combination.

Generally, a longer stopper strap setting gives better performance in deep snow on a flat landscape.

***Center Spring***

Center spring preload has an effect on steering effort, handling and bump absorption.

Also, since center spring preload adjustment puts more or less pressure on the front of the track, it has an effect on the performance in deep snow.

| Action | Result |
|---|---|
| Increasing preload | Lighter steering |
| | More bump absorption capability |
| | Better deep snow starts |
| | Better deep snow performance and handling |
| Decreasing preload | Heavier steering |
| | Less bump absorption capability |
| | Better trail handling |

***Cam Type Adjuster***

Using the suspension adjustment tool provided in the tool kit, turn the cam to increase or decrease the spring preload.

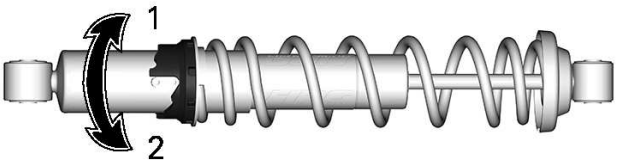


1. *Increase preload*
2. *Decrease preload*

***Ring Type Adjuster***

Grab and turn the ring and the spring to increase or decrease the spring preload.

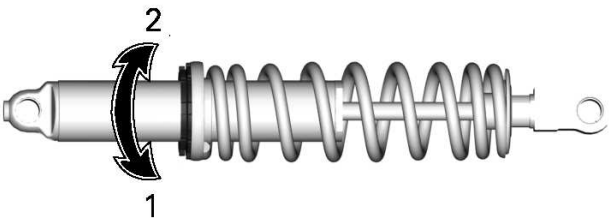


1. *Increase preload*
2. *Decrease preload*

***Rear Spring***

Rear spring preload has an effect on comfort, ride height and load compensation.

Also, adjusting rear spring preload shifts more or less weight to the snowmobile front end. As a result, more or less weight is applied to the skis. This has an effect on performance in deep snow, steering effort and handling.

Slight suspension bottoming occurring under the worst riding conditions indicates a good choice of spring preload.

**NOTE:**
Ensure to adjust suspension when hauling cargo.

**NOTE:**
Remove cargo load to ease preload adjustment.

| Action | Result |
|---|---|
| Increasing preload | Firmer rear suspension |
| | Higher rear end |
| | More bump absorption capability |
| | Heavier steering |
| Decreasing preload | Softer rear suspension |
| | Lower rear end |
| | Less bump absorption capability |
| | Lighter steering |
| | Better performance and handling in deep snow |

Refer to the following to determine if preload is correct.

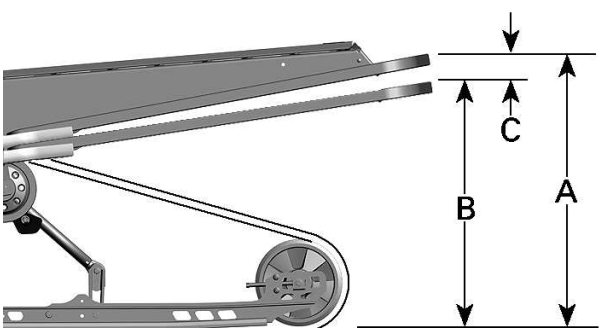


***TYPICAL - PROPER ADJUSTMENT***

- A = Suspension fully extended
- B = Suspension has collapsed with operator, passenger and load added
- C = Distance between dimension “A” and “B”, see table below

| C | What to do |
|---|---|
| 50 to 75 mm (2 to 3 in) | No adjustment required |
| More than 75 mm (3 in) | Adjusted too soft. Increase preload |
| Less than 50 mm (2 in) | Adjusted too firm. Decrease preload |

**NOTE:**
If the specification is unattainable with the original springs, see an authorized BRP snowmobile dealer for other available springs.

**NOTICE**

**To increase spring preload, always turn the left side adjustment cam in a clockwise direction, and the right side cam in a counterclockwise direction.**

**⚠ CAUTION**

**Never set preload cams directly from position 5 to 1 or directly from position 1 to 5.**

The adjustment cams have 5 different settings, 1 being the softest.

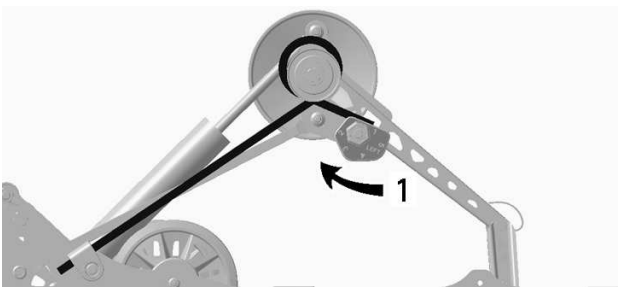


***TYPICAL — LH SIDE***
*1. Adjust spring preload*

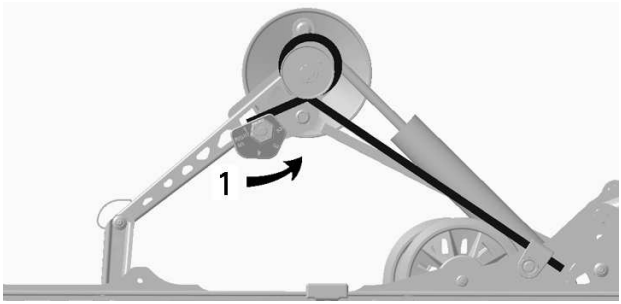


***TYPICAL — RH SIDE***
*1. Adjust spring preload*

***Rear Shock Absorber***

## Rear Shock Compression Damping (If Equipped)

**NOTE:**
Both low and high speed compression damping are adjusted simultaneously.

Low speed compression damping controls how the shock absorber reacts to a low suspension velocity (slow compression strokes, in most cases when riding at lower speeds).

High speed compression damping controls how the shock absorber reacts to a high suspension velocity (quick compression strokes, in most cases when riding at higher speeds).

| Turning | Action | Result on big and small bumps |
|---|---|---|
| Clockwise | Increasing compression damping force | Firmer compression damping |
| Counter Clockwise | Decreasing compression damping force | Softer compression damping |

To adjust, turn the adjuster button located on the oil reservoir on shock clockwise to increase compression damping force and counterclockwise to decrease compression damping force.

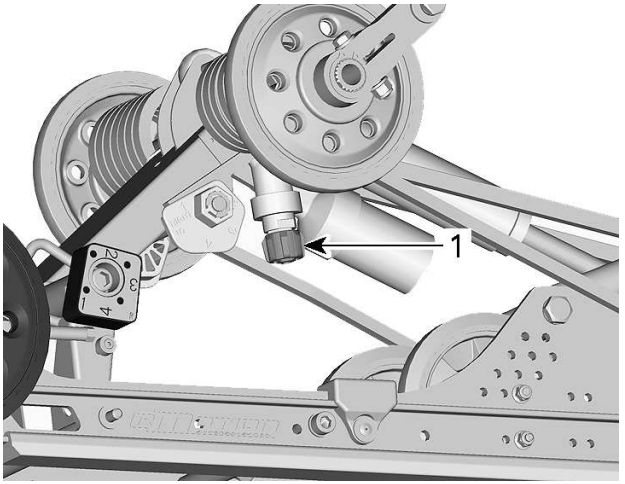


***TYPICAL - WITH PIGGYBACK RESERVOIR***

*1. Compression damping adjustment button*

**rMotion With Quick Adjust**

Turn the right side knob to adjust the shock compression speed.

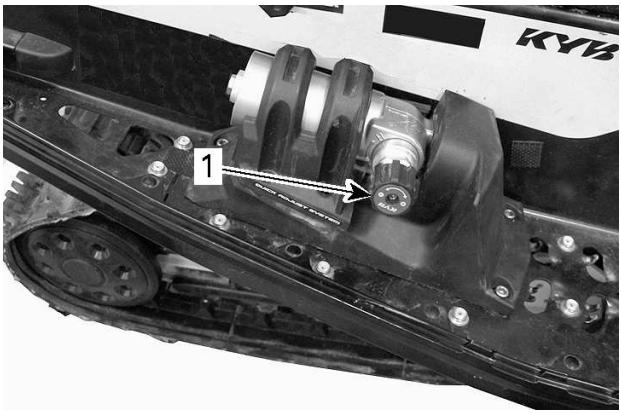


***TYPICAL - RMOTION WITH QUICK ADJUST - RH SIDE***

*1. Knob to adjust low/high speed compression damping*

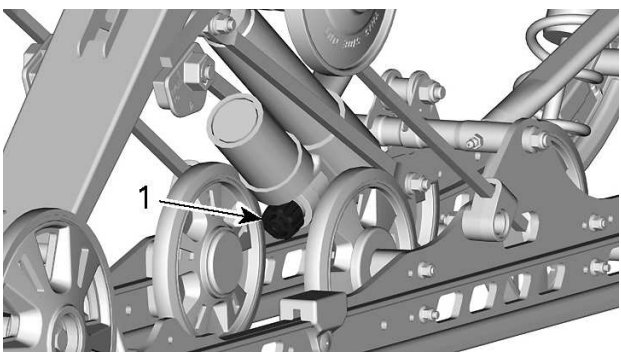


***TYPICAL - CMOTION***

*1. Compression damping adjustment button*

***Rear Suspension Extension Spring Preload (SC-5U)***

Adjust by turning the preload cam.

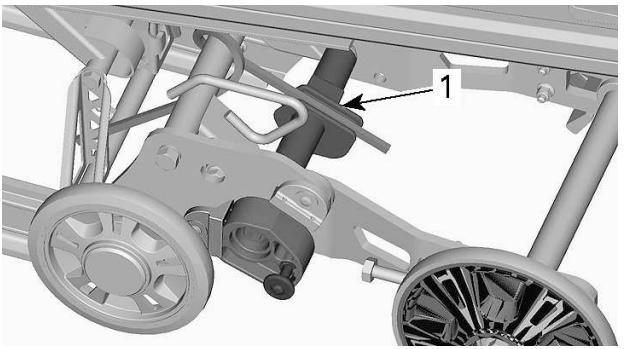


*1. Preload cam*

| ACTION | RESULT |
|---|---|
| Increasing preload | More track surface on the ground |
| | Less extension lift |
| Decreasing preload | Better reverse capability especially in deep snow |
| | More extension lift |

***Rear Suspension Extension Stabilizer Cam***

To change stabilizer cam setting, pull lock off, then turn cam.

Ensure the lock if fully pushed-in when locked.

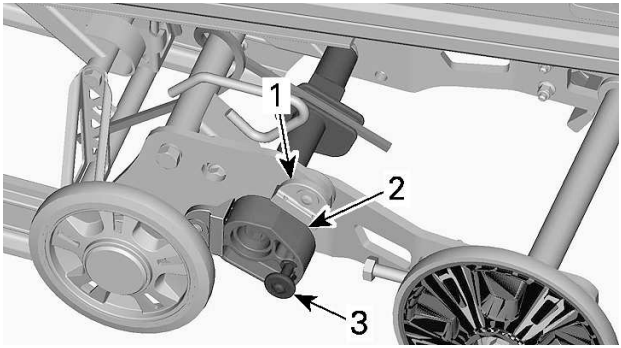


1. *Stop block*
2. *Stabilizer cam*
3. *Lock*

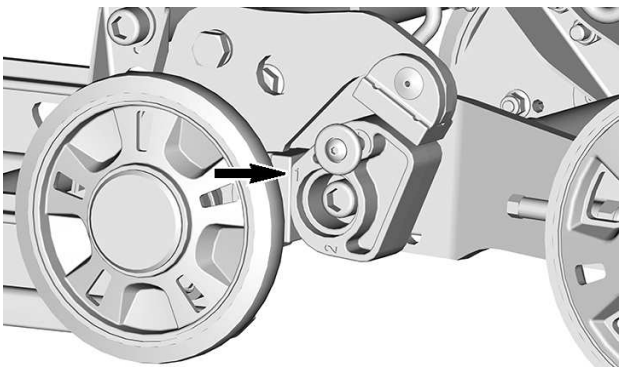

***POSITION 1***

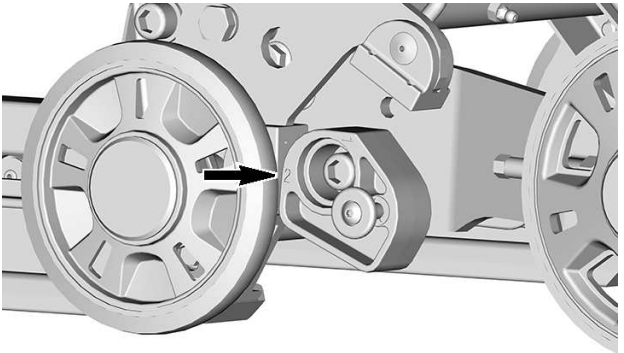

*POSITION 2*

| Cam setting | Result |
|---|---|
| Away from upper stop block (Position 2) | Allows free movement of the suspension extension on its entire stroke |
| | General use |
| | Good reverse capability |
| Leaning on both stop blocks (Position 1) | Locks the suspension extension in line with the suspension rails |
| | Better traction, full track contact surface |
| | Better towing capability |

***Rear Shock Absorber (ACS)***

The operator can adjust the comfort and ride height by adjusting the air pressure inside the air shock absorber.

To adjust, proceed as follows:

## Model with 7.2“Digital Display

1. Start engine.
2. Press and hold MODE (M) button until requested setting starts flashing.

When the air suspension mode is selected, AIR_SUSP is displayed. The display also shows the actual suspension setting (a number from 1 to 5, 1 being the softest setting).

3. Depress the heated throttle lever switch as shown to increase or decrease air pressure.

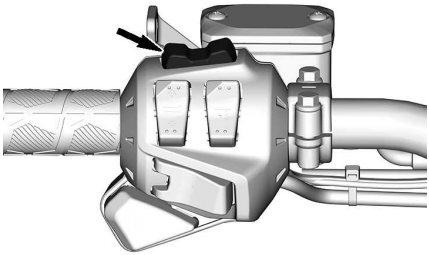

4. The desired set point appears on the display. To confirm, press the MENU (M) button or wait 5 seconds.

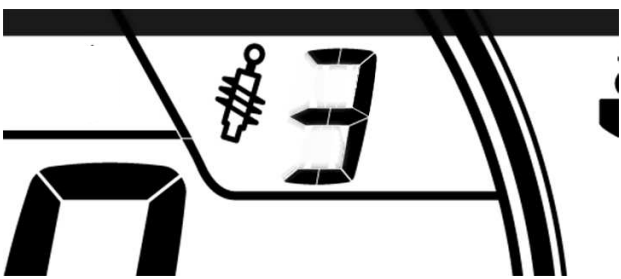

***ACS SETTING 3***

## Model with the Large Panoramic 7.8” Wide LCD Display

1. Start engine.
2. Press the Vehicle Data button, to the bottom left of the rotary control.

   When the air suspension mode is selected, AIR_SUSP is displayed. The display also shows the actual suspension setting (a number from 1 to 5, 1 being the softest setting).
3. Turn the knob modify the suspension setting.

4. The desired set point appears on the display. To confirm, press on the knob or wait 5 seconds.

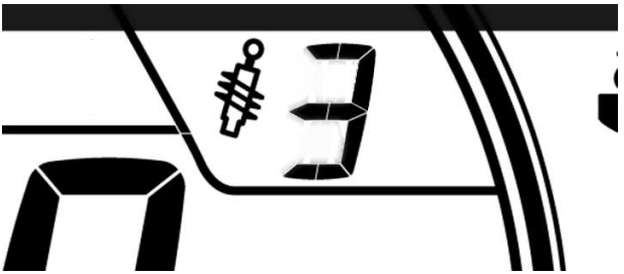

*ACS SETTING 3*

## Front Suspension Adjustments

### *Ski Stance*

Skis can be set to three different widths.

To obtain the different widths, place the spacers:

– Inside the skis leg (narrowest ski stance setting: easiest to initiate turn on sidehills), or
– Outside the skis leg (widest ski stance setting: most stable on corners), or
– On each side (central setting: best steering accuracy on deep snow).

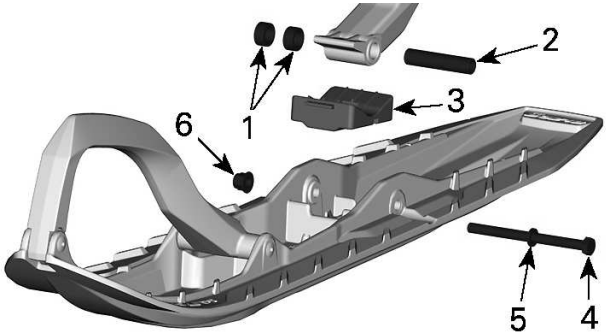


1. *Spacers*
2. *Axle*
3. *Stopper*
4. *Screw*
5. *Washer*
6. *Nut*

| TIGHTENING TORQUE | |
|---|---|
| Ski nut | 48 ± 6 Nm<br>(35 ± 4 lbf-ft) |

***Front Springs***

Front spring preload has an effect on front suspension firmness.

Front spring preload also has an effect on the steering behavior.

| Action | Result |
|---|---|
| Increasing preload | Firmer front suspension |
| | Higher front end |
| | More precise steering |
| | More bump absorption capability |

| Action | Result |
|---|---|
| Decreasing preload | Softer front suspension |
| | Lower front end |
| | Lighter steering |
| | Less bump absorption capability |

***Cam Type Adjuster***

Using the suspension adjustment tool provided in the tool kit, turn the cam to increase or decrease the spring preload.

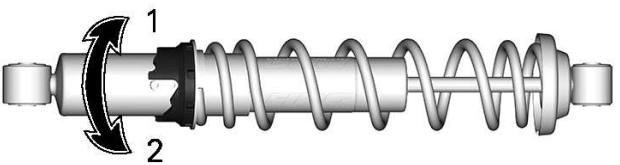


1. *Increase preload*
2. *Decrease preload*

***Ring Type 1 Adjuster***

Grab and turn the ring and the spring to increase or decrease the spring preload.

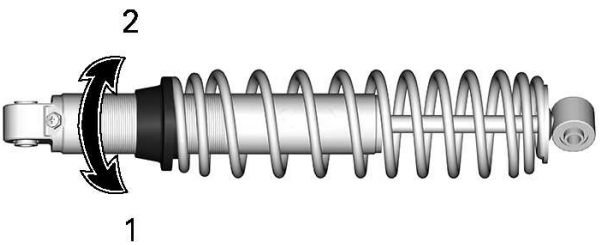


1. *Increase preload*
2. *Decrease preload*

***Ring Type 2 Adjuster***

Grab and turn the ring and the spring to increase or decrease the spring preload.

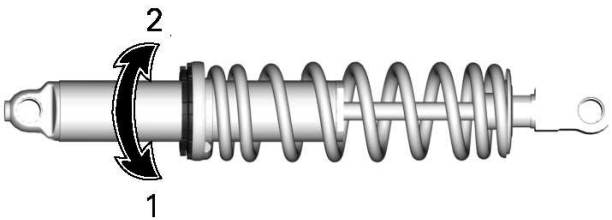


1. *Increase preload*
2. *Decrease preload*

## Adjustment Tips According to Vehicle Behavior

| Problem | Corrective measures |
|---|---|
| Front suspension darting | Check ski alignment.<br>– Reduce front suspension spring preload.<br>– Increase center spring preload.<br>– Reduce rear spring preload. |
| Steering feels too heavy at steady speeds | – Reduce front suspension spring preload.<br>– Increase center spring preload. |
| Steering feels too heavy during acceleration | – Reduce rear spring preload.<br>– Lengthen limiter strap. |
| Too much ski lift during cornering or acceleration | – Shorten limiter strap.<br>– Increase rear spring preload. |
| Rear of snowmobile seems too stiff | – Reduce rear spring preload.<br>– Reduce compression damping adjustment if equipped |

| Problem | Corrective measures |
|---|---|
| Rear of snowmobile seems too soft | – Increase rear spring preload. |
| Rear suspension is frequently bottoming | – Increase compression damping adjustment if equipped.<br>– Increase rear spring preload.<br>– Increase center spring preload.<br>– Lengthen limiter strap. |
| Snowmobile seems to pivot around its center | – Reduce center spring preload.<br>– Increase rear spring preload.<br>– Increase front suspension spring preload.<br>– Shorten limiter strap. |
| Track spins too much at start | – Reduce rear spring preload.<br>– Increase center spring preload.<br>– Lengthen limiter strap. |

# MAINTENANCE

# MAINTENANCE SCHEDULE

Maintenance is very important to keep your vehicle in safe operating condition. The vehicle should be serviced as per the maintenance schedule.

Proper maintenance is the owner's responsibility. A warranty claim may be denied if, among other things, the owner or operator caused the problem through improper maintenance or use.

Perform periodic checks and follow the maintenance schedule. **The maintenance schedule does not exempt the pre-ride inspection**.

**⚠ WARNING**

**Failure to properly maintain the vehicle according to the maintenance schedule and procedures can make it unsafe to operate.**

## EPA Regulation - Canadian and USA Vehicles

**A repair shop or person of the owner's choosing may maintain, replace, or repair** emission control devices and systems. These instructions do not require components or service by BRP or authorized BRP snowmobile dealers.

Although an authorized BRP snowmobile dealer has an in-depth technical knowledge and tools to service your vehicle, the emission-related warranty is not conditioned on the use of an authorized BRP snowmobile dealer or any other establishment with which BRP has a commercial relationship.

Proper maintenance is the owner's responsibility. A warranty claim may be denied if, among other things, the owner or operator caused the problem through improper maintenance or use.

For emission-related warranty claims, BRP is limiting the diagnosis and repair of emission-related parts to the authorized BRP snowmobile dealers. For more information, please refer to the *US EPA Emissions PERFORMANCE WARRANTY* contained in the *warranty* section.

You must follow the instructions for fuel requirements in the fueling section of this manual. Even if gasoline containing greater than ten volume percent ethanol is readily available, the US EPA issued a prohibition against the use of gasoline containing greater than 10 vol% ethanol that applies to this vehicle. The use of gasoline containing greater than 10 vol% ethanol with this engine may harm the emission control system.

## Trail/ Crossover/ Utility Usage

Whether your vehicle is a Trail, Crossover, or Utility model, these types of usage require maintenance tasks to be performed between the regular yearly intervals. These are identified as A + in the chart below.

If you regularly ride in **trails, explore the countryside, or work** with your snowmobile, follow the A+ Trail / Crossover / Utility interval and perform the tasks outlined in the chart below.

***Extreme Cold Condition***

An engine that is frequently operated at or below an ambient temperature of -25 °C (-13 °F) will require an increase in service and maintenance schedule.

Any combustion engine operated at these low ambient temperature will collect an increased amount of condensation at every startup/ warm-up.

Since the engine is not reaching operating temperatures for extended periods of time, the oil is starting to be strongly diluted with water and gas residue (more water content).

An engine needs to reach operating temperature, in order to be able to evaporate condensate out of the oil.

If daily usage (work or leisure driving cycle) is similar to those mentioned below, BRP strongly recommends changing the oil at least once a month.

Parameters of an increase in service and maintenance schedule:

- Engine not reaching the proper operating temperature during normal daily usage
- Multiple starts and stops without reaching operating temperature
- Short idle periods
- Low RPM driving cycle in short distances without reaching operating temperature.

**NOTE:**
BRP strongly recommends the installation of a block heater to help warm up the liquids, this will also help to extend the oil lifetime.

## Maintenance Schedule

Make sure to perform proper maintenance at recommended intervals as indicated in the tables.

The maintenance chart indicates the items needing to be addressed based on 2 criteria, whichever happens first:

– Calendar time
– Odometer reading.

Your driving habits determines the factors you shall adhere too. For example:

– Someone who uses their vehicle every other weekend trail riding with friends would most likely follow the **odometer reading** to determine the frequency of his maintenance.
– Someone who uses their vehicle seldomly over the year or only on a few occasions would follow the **calendar time** to determine the frequency of his maintenance.

**IMPORTANT**: The following tables show the appropriate maintenance application for the first 3 years. For subsequent years, repeat the same pattern alternatively.

| Maintenance Overview | | |
|---|---|---|
| Calendar Time | Odometer | Deep Snow or Trail/ Cross Over/ Utility |
| Every Month | 1500 km (1000 mi) | **A+** |
| 1 Year | 3000 km (2000 mi) | **A** |
| Every Month | 4500 km (3000 mi) | **A+** |
| 2 Years | 6000 km (4000 mi) | **A** and **B** |
| Every Month | 7500 km (5000 mi) | **A+** |

***600 ACE/ 900 ACE Engines***

| TRAIL / CROSSOVER / UTILITY | A+ | A | B |
|---|---|---|---|
| **A = Adjust**<br>**C = Clean**<br>**I = Inspect**<br>**L = Lubricate**<br>**R = Replace**<br>**T = Torque** | **Every month or 1500 km (1000 mi)** | **Every year or 3000 km (2000 mi)** | **Every 2 years or 6000 km (4000 mi)** |
| Air and Fuel Delivery | | | |
| Fuel components (fuel cap, hoses, clamps and tank fixation) and function* | | **I** | |
| In-line fuel filter | | **R**<br>Every 5 years | |
| Body and Chassis | | | |
| Body panels and hardware | | **I, T** | |
| Pivots, latches, hinges and key barrels | | **L** | |
| Engine and Cooling | | | |
| Engine cooling components (coolant concentration, coolant level, hose condition, clamps, leaks) | | **I, A** | |
| Engine oil and oil filter | | **R** | |
| Engine seals and gaskets | | **I** | |
| Spark plugs | | **R**<br>Every 3 years | |

| TRAIL / CROSSOVER / UTILITY | A+ | A | B |
|---|---|---|---|
| **A = Adjust**<br>**C = Clean**<br>**I = Inspect**<br>**L = Lubricate**<br>**R = Replace**<br>**T = Torque** | **Every month or 1500 km (1000 mi)** | **Every year or 3000 km (2000 mi)** | **Every 2 years or 6000 km (4000 mi)** |
| | | or 10 000 km (6000 mi) | |
| Engine coolant | | **R** Every 5 years | |
| Exhaust and Emissions | | | |
| Exhaust components (gaskets, pipes, muffler condition, leaks)* | | **I** | |
| Exhaust manifold | | **T** | |
| Brake | | | |
| Brake components and function* | | **I, L** | |
| Brake fluid | | | **R** Every 2 years |
| Drive | | | |
| Chaincase drive chain tension | **A** | **A** | |
| Gearbox / chaincase oil level | **I** | **I** | |
| Track alignment and tension | **A** | **I, A** | |

| TRAIL / CROSSOVER / UTILITY | A+ | A | B |
|---|---|---|---|
| **A = Adjust**<br>**C = Clean**<br>**I = Inspect**<br>**L = Lubricate**<br>**R = Replace**<br>**T = Torque** | **Every month or 1500 km (1000 mi)** | **Every year or 3000 km (2000 mi)** | **Every 2 years or 6000 km (4000 mi)** |
| Gearbox / chaincase oil | | | **R** |
| Continuously Variable Transmission (CVT) | | | |
| CVT components and function* | | **I, C, L** | |
| CVT drive belt condition | **I** | | |
| CVT drive belt tension | **A** | **A** | |
| Drive pulley retaining screw | | **T** | |
| Electrical | | | |
| Battery connections and condition | | **I** | |
| Electrical harness routing | | **I** | |
| Headlight aim | | **A** | |
| Modules and applicable software updates | | **I** | |
| Operation of control switches and lighting | | **I** | |
| Steering and Controls | | | |
| Ski runners | **I** | **I** | |
| Gearbox position lever operation | | **I, A** | |
| Steering alignment | | **I, A** | |

| TRAIL / CROSSOVER / UTILITY | A+ | A | B |
|---|---|---|---|
| **A = Adjust**<br>**C = Clean**<br>**I = Inspect**<br>**L = Lubricate**<br>**R = Replace**<br>**T = Torque** | **Every month or 1500 km (1000 mi)** | **Every year or 3000 km (2000 mi)** | **Every 2 years or 6000 km (4000 mi)** |
| Steering components and function* | | **I** | |
| Throttle cable | | **A** | |
| Throttle operation | | **I** | |
| Suspension | | | |
| Suspension components and function* | | **I, L** | |

*For an extensive list of maintenance actions to be performed, refer to the Maintenance Checklist.

***900 ACE Turbo/ R***

| TRAIL / CROSSOVER / UTILITY | A+ | A | B |
|---|---|---|---|
| **A = Adjust**<br>**C = Clean**<br>**I = Inspect**<br>**L = Lubricate**<br>**R = Replace**<br>**T = Torque** | **Every month or 1500 km (1000 mi)** | **Every year or 3000 km (2000 mi)** | **Every 2 years or 6000 km (4000 mi)** |
| Air and Fuel Delivery | | | |
| Fuel components (fuel cap, hoses, clamps and tank fixation) and function* | | **I** | |
| In-line fuel filter | | **R**<br>Every 5 years | |
| Body and Chassis | | | |
| Body panels and hardware | | **I, T** | |
| Pivots, latches, hinges and key barrels | | **L** | |
| Engine and Cooling | | | |
| Engine cooling components (coolant concentration, coolant level, hose condition, clamps, leaks) | | **I, A** | |
| Engine oil and oil filter | | **R** | |
| Engine seals and gaskets | | **I** | |
| Spark plugs | | **R**<br>Every 3 years | |

| TRAIL / CROSSOVER / UTILITY | A+ | A | B |
|---|---|---|---|
| **A = Adjust**<br>**C = Clean**<br>**I = Inspect**<br>**L = Lubricate**<br>**R = Replace**<br>**T = Torque** | **Every month or 1500 km (1000 mi)** | **Every year or 3000 km (2000 mi)** | **Every 2 years or 6000 km (4000 mi)** |
| | | or<br>10 000 km (6000 mi) | |
| Engine coolant | | **R**<br>Every 5 years | |
| Exhaust and Emissions | | | |
| Exhaust components (gaskets, pipes, muffler condition, leaks)* | | **I** | |
| Exhaust manifold | | **T** | |
| Turbo exhaust gasket | | **R**<br>Every 3 years or 10 000 km (6000 mi) | |
| Brake | | | |
| Brake components and function* | | **I, L** | |
| Brake fluid | | **R**<br>Every 2 years | |

| TRAIL / CROSSOVER / UTILITY | A+ | A | B |
|---|---|---|---|
| **A = Adjust**<br>**C = Clean**<br>**I = Inspect**<br>**L = Lubricate**<br>**R = Replace**<br>**T = Torque** | **Every month or 1500 km (1000 mi)** | **Every year or 3000 km (2000 mi)** | **Every 2 years or 6000 km (4000 mi)** |
| Drive | | | |
| Chaincase drive chain tension | **A** | **A** | |
| Gearbox / chaincase oil level | **I** | **I** | |
| Track alignment and tension | **A** | **I, A** | |
| Gearbox / chaincase oil | | | **R** |
| Continuously Variable Transmission (CVT) | | | |
| CVT components and function* | | **I, C, L** | |
| CVT drive belt condition | **I** | | |
| CVT drive belt tension | **A** | **A** | |
| Drive pulley retaining screw | | **T** | |
| Electrical | | | |
| Battery connections and condition | | **I** | |
| Electrical harness routing | | **I** | |
| Headlight aim | | **A** | |
| Modules and applicable software updates | | **I** | |
| Operation of control switches and lighting | | **I** | |

| TRAIL / CROSSOVER / UTILITY | A+ | A | B |
|---|---|---|---|
| **A = Adjust**<br>**C = Clean**<br>**I = Inspect**<br>**L = Lubricate**<br>**R = Replace**<br>**T = Torque** | **Every month or 1500 km (1000 mi)** | **Every year or 3000 km (2000 mi)** | **Every 2 years or 6000 km (4000 mi)** |
| Steering and Controls | | | |
| Ski runners | **I** | **I** | |
| Gearbox position lever operation | | **I, A** | |
| Steering alignment | | **I, A** | |
| Steering components and function* | | **I** | |
| Throttle cable | | **A** | |
| Throttle operation | | **I** | |
| Suspension | | | |
| Suspension components and function* | | **I, L** | |

*For an extensive list of maintenance actions to be performed, refer to the Maintenance Checklist.

# MAINTENANCE PROCEDURES

This section includes instructions for basic maintenance procedures.

**⚠ WARNING**

**Turn off the engine, remove tether cord cap and follow these maintenance procedures when performing maintenance. If you do not follow proper maintenance procedures you can be injured by hot parts, moving parts, electricity, chemicals or other hazards.**

**⚠ WARNING**

**Should removal of a locking device be required (e.g. lock tabs, self-locking fasteners, etc.) when undergoing disassembly/assembly, always replace with a new one.**

## Engine Coolant

**⚠ WARNING**

**Never open coolant tank cap when engine is hot.**

***Engine Coolant Level Verification***

Open the RH side panel, see *Body and Seat*.

Check coolant level at room temperature. Liquid should be at cold level line of coolant tank.

**NOTE:**
When checking level at low temperature it may be slightly lower then the mark.

If additional coolant is necessary or if entire system has to be refilled, refer to an authorized BRP snowmobile dealer, repair shop or person of your own choosing.

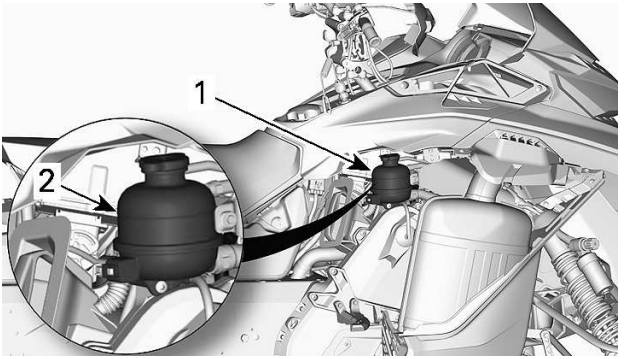


1. *Coolant reservoir*
2. *COLD line*

***Recommended Engine Coolant***

| RECOMMENDED COOLANT |
|---|
| XPS Extended life pre-mixed coolant |
| IF THE RECOMMENDED XPS COOLANT IS NOT AVAILABLE |
| Distilled water and antifreeze solution (50% distilled water, 50% antifreeze) |

| *NOTICE* |
|---|
| **Always use ethylene-glycol antifreeze containing corrosion inhibitors specifically for internal combustion aluminum engines.** |

## Engine Oil

***Extreme Cold Condition***

An engine that is operated in -25°C/-13°F and below environment will require an increase in service and maintenance schedule.

Any combustion engine operated in such a low load and rather cold operating temperature collects an increased amount of condensation at every startup/warm-up.

Since the engine is not reaching operating temperatures for extended periods of time, the oil is starting to be strongly diluted with water and gas residue (more water content).

An engine needs to reach operating temperature, in order to be able to evaporate condensate out of the oil.

If daily usage (work or leisure driving cycle) is similar to those mentioned below, BRP strongly recommends changing the oil at least once a month.

Parameters of an increase in service and maintenance schedule:
- Engine not reaching the proper operating temperature during normal daily usage
- Multiple starts and stops without reaching operating temperature
- Short idle periods
- Low RPM driving cycle in short distances without reaching operating temperature.

**NOTE:**
BRP strongly recommends the installation of a block heater to help warm up the liquids, this will also help to extend the oil lifetime.

***Recommended Oil***

Rotax® engines were developed and validated using the XPS™ oil. BRP recommends the use of its XPS engine oil or an equivalent at all time. Do not add any oil additives to the recommended engine oil. Damages caused by the use of an oil not suitable for the engine or by adding of an oil additives may not be covered by the BRP Limited Warranty.

| **XPS RECOMMENDED Engine Oil** |
|---|
| 4T 0W40 Synthetic oil |
| IF THE RECOMMENDED XPS ENGINE OIL IS NOT AVAILABLE |
| Use a 0W40 4-stroke SAE synthetic engine oil meeting or exceeding the following lubricant industry specifications.<br>Always check the API service label certification on the oil container, it must contain at least the indicated standard.<br>– API service classification SN |

***Verifying the Engine Oil Level***

**NOTICE**

**Check level before each ride and refill if necessary. Do not overfill. Operating the engine with an improper level may severely damage engine. Wipe off any spillage.**

Place vehicle on a level surface and proceed as follows to check oil level:

1. Start engine and let it reach its normal operating temperature. Engine is at normal temperature when rear radiator gets warm, indicating that the thermostat is open.
2. Let engine run at idle for 30 more seconds.
3. Stop engine.
4. Open the LH side panel. Refer to *Body and Seat*.
5. Remove the drive belt guard, refer to *Drive Belt Guard*.
6. Remove dipstick from the filler tube, then wipe it clean.
7. Completely insert dipstick in the filler tube.
8. Remove dipstick and check the oil level. Oil level should be between the MIN and MAX marks as shown, add if necessary.

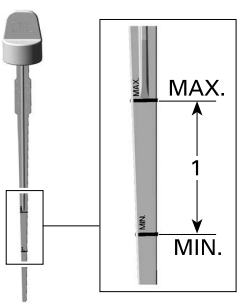


*1. Oil level between MIN. and MAX.*

**⚠ CAUTION**

**Engine oil can be very hot.**

**⚠ WARNING**

**Wipe off any oil spills. Oil is highly flammable when heated.**

***Replacing the Engine Oil***

**⚠ CAUTION**

**The engine oil can be very hot. Wait until engine oil is warm.**

**NOTICE**

**Engine oil and oil filter must be replaced at the same time.**

1. Bring engine to its normal operating temperature.
2. Place vehicle on a level surface.
3. Remove the LH side panel.
4. Remove dipstick.

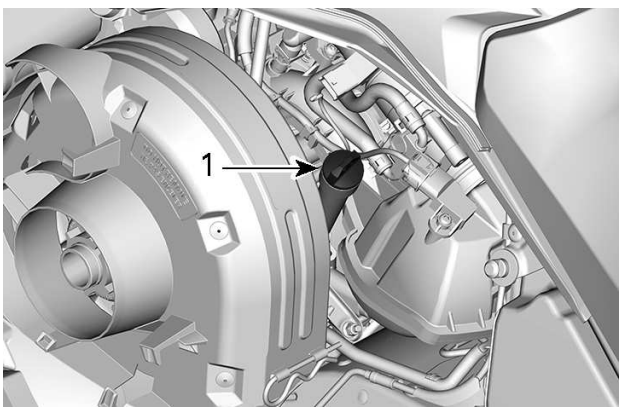


***LH SIDE OF VEHICLE***

*1. Oil tank dipstick*

5. Remove the *oil filter*. Refer to the procedure in this subsection.
6. From underneath the vehicle, access the drain plug:

    1. Remove one access cover retaining screw and loosen the other.

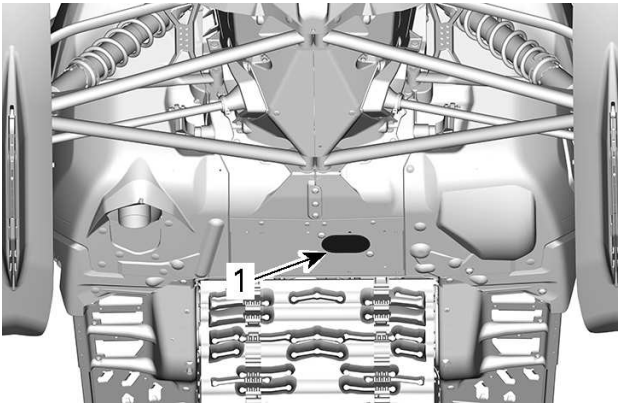


*1. Drain plugs access cover*

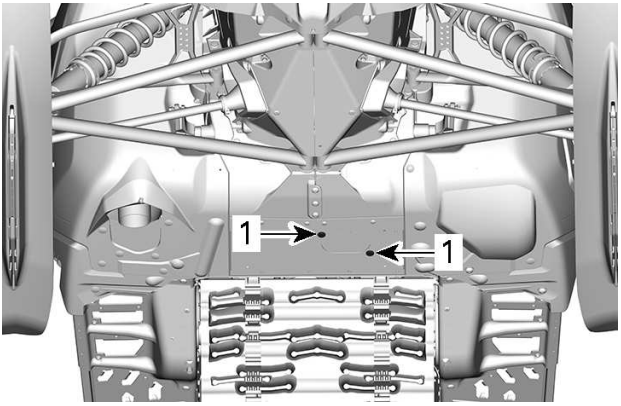


***PIVOT THE ACCESS COVER***

*1. Retaining screws*

2. Pivot the access cover to clear the bottom pan opening.

7. Clean drain plug area.
8. Place a drain pan under the bottom pan opening.

9. Remove engine drain plugs in the following order.

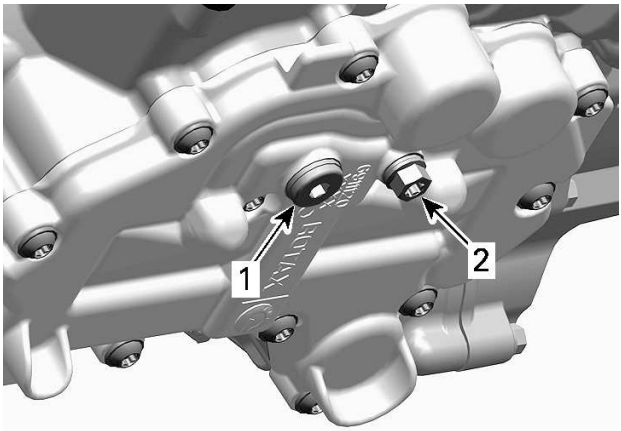


***UNDERNEATH THE ENGINE***

1. *Main drain plug*
2. *Secondary drain plug*

10. Allow oil to drain completely.
11. Install **NEW** sealing washers on oil drain plugs.

| *NOTICE* |
| --- |
| **Never use a sealing washer a second time. Always replace with a new one.** |

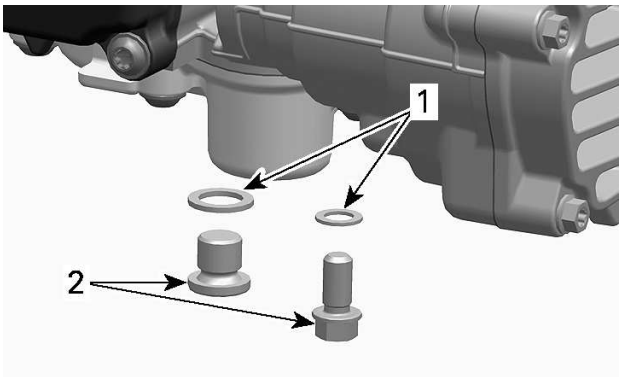


*1. Sealing washer*
*2. Oil drain plug*

12. Install drain plugs and tighten to specification.

| Tightening Torque | |
|---|---|
| Drain plugs | 15 ± 2 Nm<br>(133 ± 18 lbf-in) |

13. Install a new oil filter. Refer to procedure in this subsection.
14. Refill oil tank at the proper level with the recommended oil.

| Approximate Engine Oil Capacity (with filter) | |
|---|---|
| 600 ACE | 2.1 l (2.22 qt(liq.,US)) |
| 900 ACE<br>900 ACE Turbo | 3.3 l (3.5 qt(liq.,US)) |

15. Reinstall dipstick in oil tank and properly tighten it.
16. Start engine and let it idle for a few minutes.
17. Ensure there are no leaks.
18. Stop engine and check oil level as explained in this subsection. Refill if necessary.
19. Dispose oil and filter as per your local environmental regulations.

## Engine Oil Filter

***Engine Oil Filter Replacement***

## Removing the Oil Filter

1. Remove the RH side panel.
2. Clean oil filter area.
3. Remove:
   - Oil filter cover screws
   - Oil filter cover with O-ring
   - Oil filter.

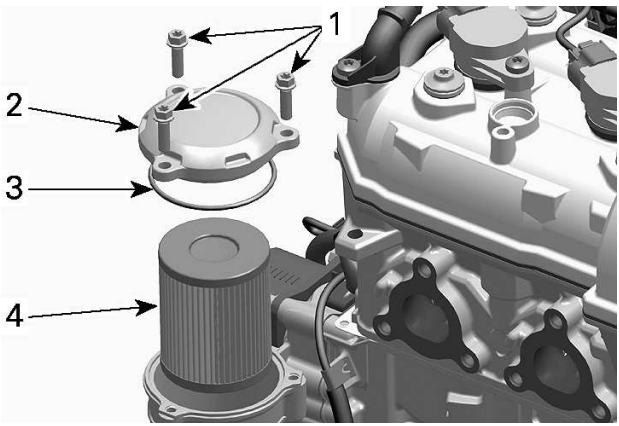


*1. Oil filter cover screws*
*2. Oil filter cover*
*3. O-ring*
*4. Oil filter*

4. Dispose filter as per your local environmental regulations.

## Installing the Oil Filter

1. Check the oil filter inlet and outlet orifices inside oil filter receptacle (integrated part of magneto cover) for dirt and contaminations.

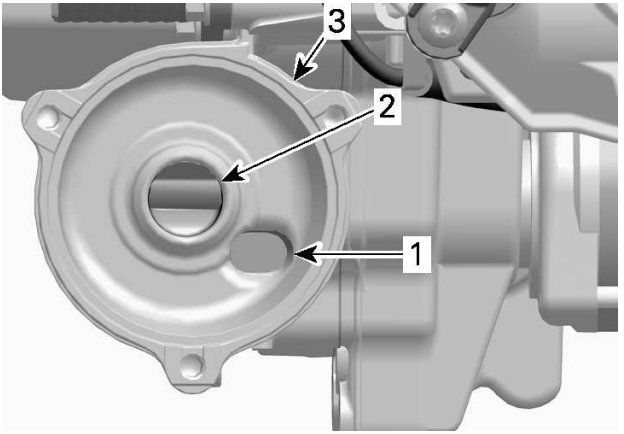


1. *Oil inlet orifice from the oil pressure pump*
2. *Oil outlet orifice to the engine lubrication system*
3. *Oil filter receptacle*

2. Install a new O-ring on oil filter cover.
3. Install the new filter into the cover.
4. Lubricate filter seal and cover O-ring with engine oil.




*1. Lubricate with engine oil*

**NOTICE**

**Pay attention to avoid pinching the O-ring during filter and cover installation.**

5. Install the oil filter cover.
6. Tighten oil filter cover screws to specification.

| Tightening Torque | |
|---|---|
| Oil filter cover screws | 10 ± 1 Nm (89 ± 9 lbf-in) |

7. Wipe off any oil spillage on engine.

## Exhaust System

***Exhaust System Verification***

The muffler tail pipe should be centered with the exit hole in the bottom pan. Exhaust system must be free of rust or leaks. Make sure that all parts are securely in place.

Check retaining springs and heat shields condition and replace if necessary.

The exhaust system is designed to reduce noise and to improve the total performance of the engine. Modification may be in violation of local laws.

**NOTICE**

**If any exhaust system component is removed, modified or damaged, severe engine damage may result.**

## Spark Plugs

Spark plugs inspection or replacement may be performed by an authorized BRP snowmobile dealer, repair shop, or person of your own choosing. Spark plugs inspection or replacement requires an in-depth technical knowledge. Though not required, it is recommended that an authorized BRP snowmobile dealer performs spark plugs inspection or replacement.

## Brake Fluid

***Brake Fluid Level Verification***

**NOTICE**

**Vehicle must be on a level surface before checking any fluid levels.**

Check brake fluid (DOT 4) in reservoir for proper level. Add fluid (DOT 4) as required.

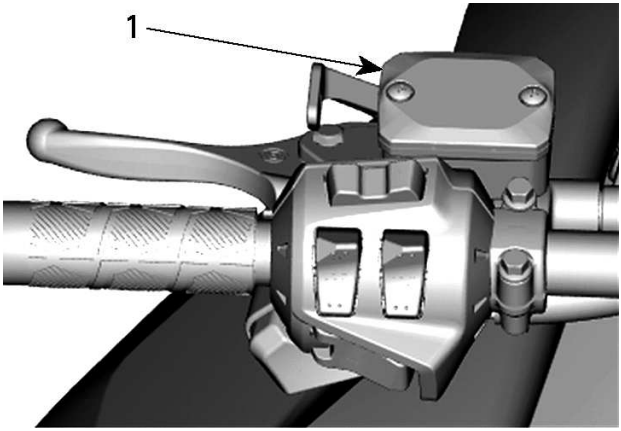


***TYPICAL***

*1. Brake fluid reservoir*

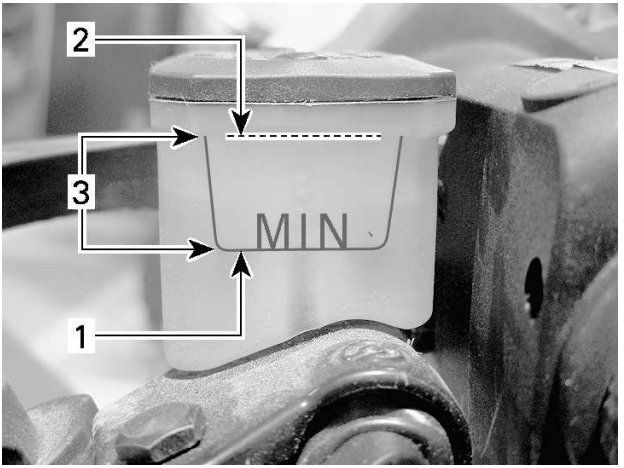


***TYPICAL***

1. *Minimum*
2. *Maximum*
3. *Operating range*

**⚠ CAUTION**

**Avoid getting brake fluid on skin or eyes - it may cause severe burns. In case of contact with the skin, wash thoroughly. In case of contact with the eyes, immediately rinse with plenty of water for at least 10 minutes and then consult a doctor immediately.**

***Recommended Fluid***

Use only DOT 4 brake fluid from a sealed container. An opened container may be contaminated or may have absorbed moisture from the air.

**⚠ WARNING**

**Use only DOT 4 brake fluid from a sealed container. To avoid serious damage to the braking system, do not use fluids other than the recommended one, nor mix different fluids for topping up.**

**NOTICE**

**Brake fluid can damage painted and plastic parts. Handle with care. Rinse thoroughly in case of spillage.**

## Chaincase Oil

***Recommended Chaincase Oil***

| Recommended Chaincase Oil |
|---|
| XPS Synthetic chaincase oil |
| Alternative or if not available |
| 75W140 gear oil that meets the API GL-5 specification |

**NOTICE**

**If the recommended XPS chaincase oil is not available, use a 75W140 gear oil that meets the API GL-5 specification. The chaincase of this snowmobile has been developed and validated using the XPS™ Synthetic chaincase oil. BRP strongly recommends the use of its XPS Synthetic chaincase oil at all times. Damages caused by oil which is not suitable for the chaincase will not be covered by the BRP limited warranty.**

***Chaincase Oil Level Verification***

With the vehicle on a level surface, check the oil level by removing the check plug.

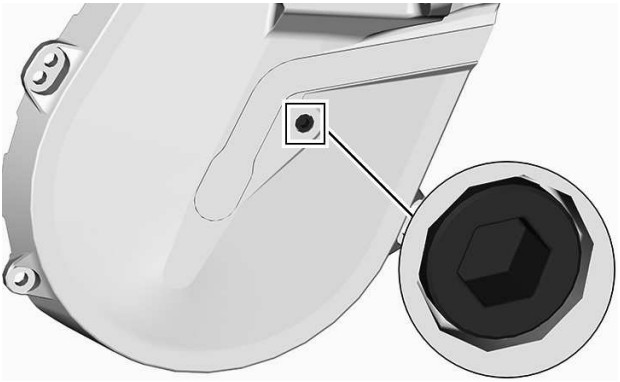

***CHECK PLUG***

Oil level must reach the threaded hole.

If level is correct, reinstall check plug and tighten to the specified torque.

| Tightening Torque | |
|---|---|
| Check plug | 6 ± 1 Nm (53 ± 9 lbf-in) |

If level is insufficient, refer to *Chaincase Filling Procedure*.

***Chaincase Oil Replacement***

## Chaincase Oil Draining

1. Place the vehicle on a level surface.
2. Place a drain pan under the chaincase drain plug area.
3. Remove filler cap.
4. Remove the drain plug located at the bottom of the chaincase.

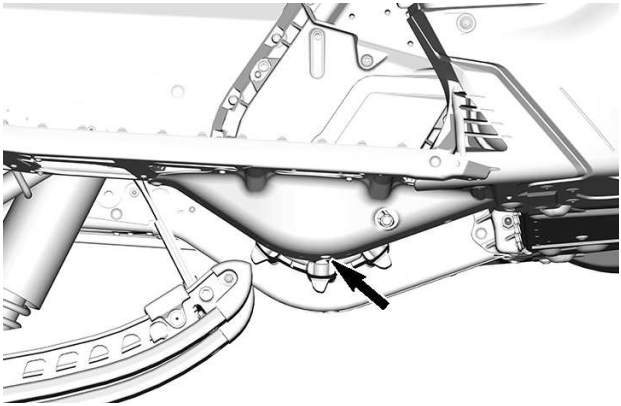

5. Wait a while to allow all oil to drain out of the chaincase.
6. Install drain plug and tighten to specification.

| Tightening Torque | |
|---|---|
| Chaincase drain plug | 6 ± 1 Nm (53 ± 9 lbf-in) |

## Chaincase Filling Procedure

1. Open the RH side panel. Refer to *Equipment*.
2. Remove the check plug.

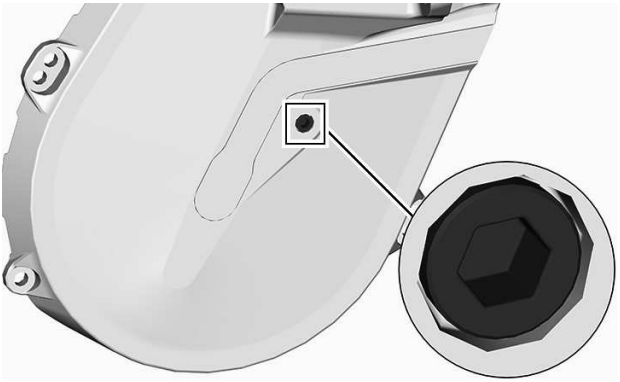

***CHECK PLUG***

3. Remove the filler cap.

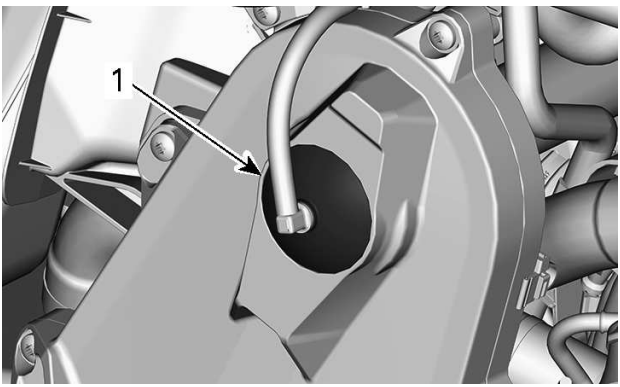


***TYPICAL - TOP OF CHAINCASE***

*1. Filler cap*

4. Pour recommended oil in the filler hole until oil comes out by the check plug hole.
5. Reinstall check plug and tighten to specification.

| Tightening Torque | |
|---|---|
| Check plug | 6 ± 1 Nm (53 ± 9 lbf-in) |

Reinstall the filler cap.

## Gearbox Oil

***Recommended Gearbox Oil***

| XPS RECOMMENDED Chaincase Oil |
|---|
| XPS™ Synchromesh Transmission Synthetic Oil |
| IF THE RECOMMENDED XPS OIL IS NOT AVAILABLE |
| Use a 75W140 gear oil that meets the API GL-5 specification |

**NOTICE**

**The gearbox of this snowmobile has been developed and validated using the XPS synchromesh transmission synthetic oil. BRP strongly recommends the use of its synchromesh transmission synthetic oil at all times. Damages caused by oil which is not suitable for the gearbox will not be covered by the BRP limited warranty.**

***Gearbox Oil Level***

With the vehicle on a level surface, check the oil level by removing the check plug on the left side of gearbox.

Oil level must reach the threaded hole's lower edge.

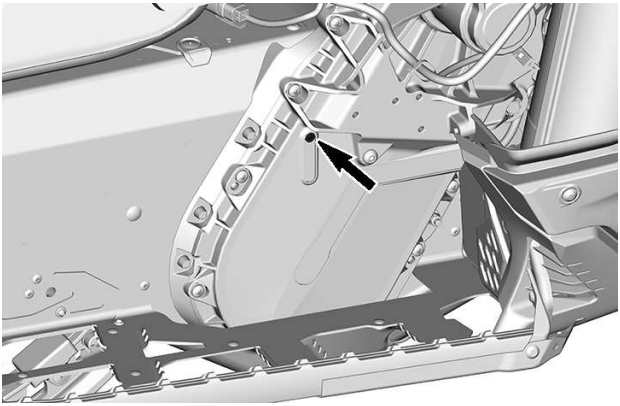

***CHECK PLUG***

To add oil, proceed as follows:

1. Remove the filler plug.

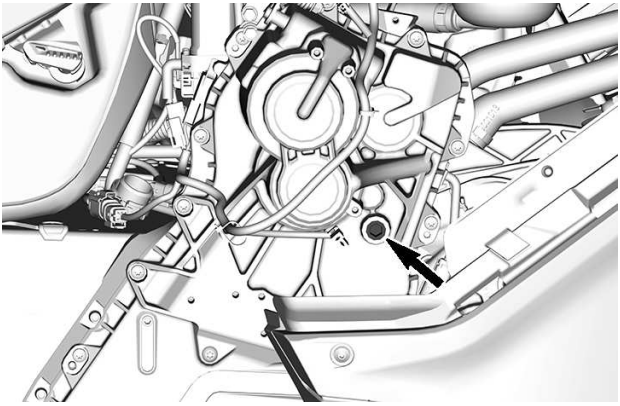

***FILLER PLUG***

2. Pour recommended oil in gearbox by the filler hole until oil comes out by the check plug hole.
3. Reinstall check and filler plug and tighten to specifications.

| TIGHTENING TORQUE | |
|---|---|
| Check plug | 6 ± 1 Nm (53 ± 9 lbf-in) |
| Filler plug | 8 ± 1 Nm (71 ± 9 lbf-in) |

***Replacing the Gearbox Oil***

## Gearbox Oil Draining

1. Place the vehicle on a level surface.
2. Place a drain pan under gearbox drain plug area.
3. Remove filler cap.
4. Remove the drain plug located at the bottom of gearbox.

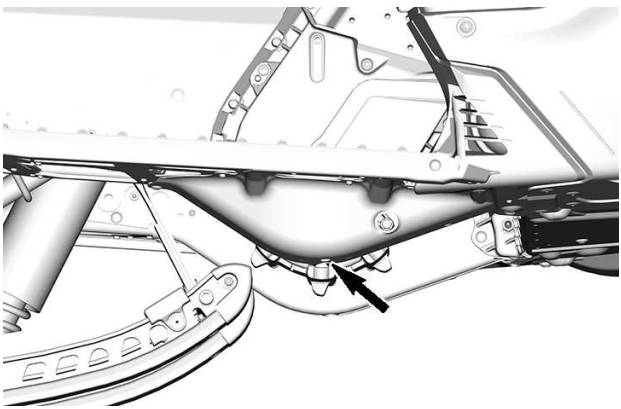

5. Wait a while to allow all oil to drain out of gearbox.
6. Install drain plug and tighten to specification.

| Tightening Torque | |
|---|---|
| Gearbox drain plug | 6 ± 1 Nm (53 ± 9 lbf-in) |

## Gearbox Oil Filling

**NOTE:**
Vehicle must be on a level surface.

1. Remove the filler plug.
2. Remove oil level check plug.

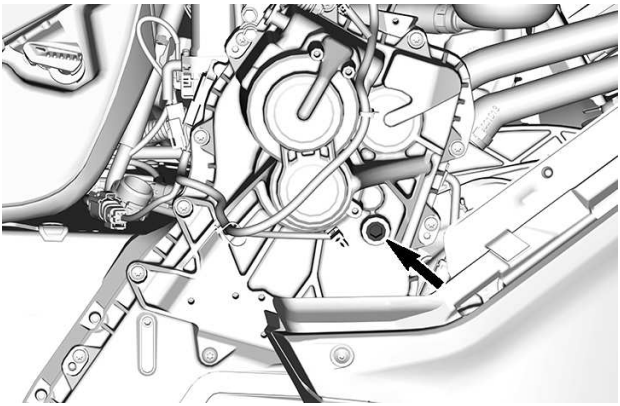

***FILLER PLUG***

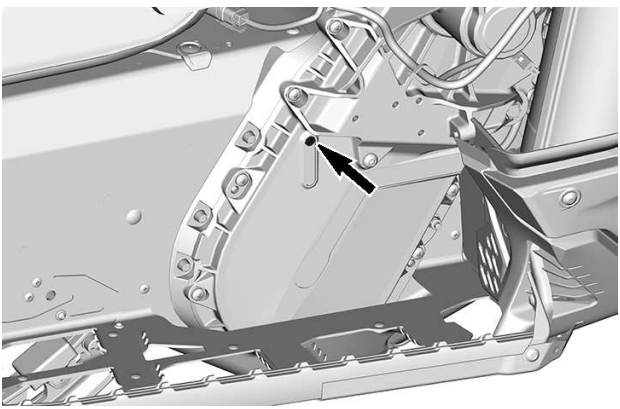

***CHECK PLUG***

3. Pour recommended oil into gearbox through the filler hole.

**NOTE:**
Oil level is correct when it just begins to come out of the check plug orifice.

4. Reinstall check plug and tighten to specification.

| tightening torque | |
|---|---|
| Oil level check plug | 6 ± 1 Nm (53 ± 9 lbf-in) |

## Drive Chain

***Access to Chaincase***

Open RH side panel, refer to *Equipment*.

***Drive Chain Adjustment***

Using the Torx end of the driven pulley expander, GENTLY turn tensioner clockwise to eliminate the play.

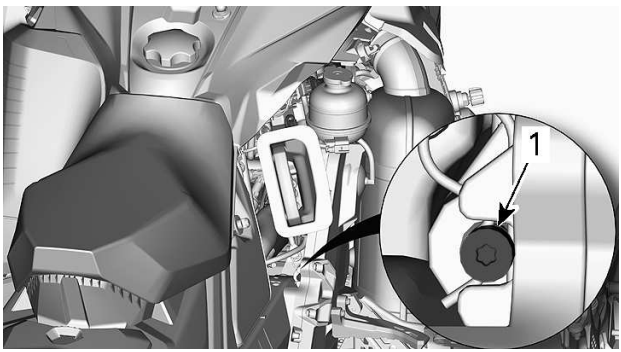


***TYPICAL***

Do not force the tensioner in.

**NOTE:**
Do not remove the hair cotter pin.

**NOTICE**

**Overtightening the drive chain could result in severe damage to the chaincase components.**

## Drive Belt

***Drive Belt Inspection***

Remove the drive belt guard. Refer to the procedure in *Equipment*.

Inspect belt for cracks, fraying or abnormal wear (uneven wear, wear on one side, missing cogs, cracked fabric). If abnormal wear is noted, probable cause could be pulley misalignment, excessive RPM with frozen track, fast starts without warm-up period, burred or rusty sheave, oil on belt or distorted spare belt. Contact an authorized BRP snowmobile dealer.

***Drive Belt Replacement***

## Drive Belt Removal

1. Remove tether cord cap from engine cut-off switch.
2. Remove drive belt guard, refer to *Controls, Instruments and Equipment*.
3. Insert the driven pulley expander provided in the threaded hole on the adjuster hub as shown.



***TYPICAL - PULLEY EXPANDER INSTALLED ON ADJUSTER HUB***

4. Open the driven pulley by screwing the tool in.
5. Remove the drive belt by slipping it over the top of the driven pulley, then over the drive pulley.

## Drive Belt Installation

1. If necessary, open the driven pulley, refer to *Drive Belt Removal* above.
2. Slip the belt over the drive pulley, then over the driven pulley.

| *NOTICE* |
| --- |
| **Do not force or use tools to pry the belt into place, as this could cut or break the cords in the belt.** |

**NOTE:**
The maximum drive belt life span is obtained when belt is installed with arrows in the direction of rotation.

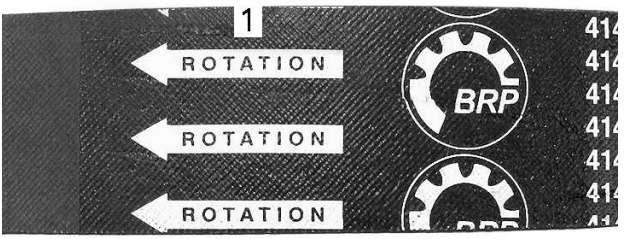


*1. To be pointed in the direction of rotation*

3. Unscrew and remove the driven pulley expander from the pulley.
4. Rotate the driven pulley several times to properly set the belt between the sheaves.
5. If a new belt was installed, an adjustment will be required for the proper belt height. Refer to *drive belt height adjustment* below.
6. Install belt guard. Refer to *Equipment*.
7. Close side panel. Refer to *Body and Seat*.

***Drive Belt Height Adjustment***

The drive belt height must be checked every time a new drive belt is installed and as part of the pre-ride inspection.

To adjust the drive belt height, proceed as follows:

1. Remove tether cord cap from engine cut-off switch.
2. Remove drive belt guard.
3. Loosen the clamping bolt.

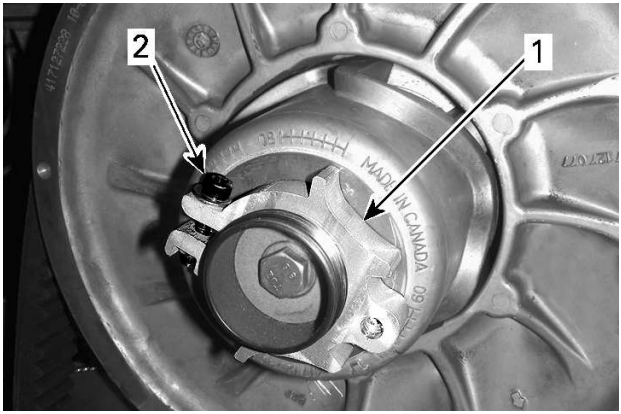


1. *Adjuster hub*
2. *Clamping bolt*

4. Using the suspension adjustment tool provided, turn the ring 1/4 turn at a time then rotate the driven pulley to properly set the drive belt between the pulley sheaves.

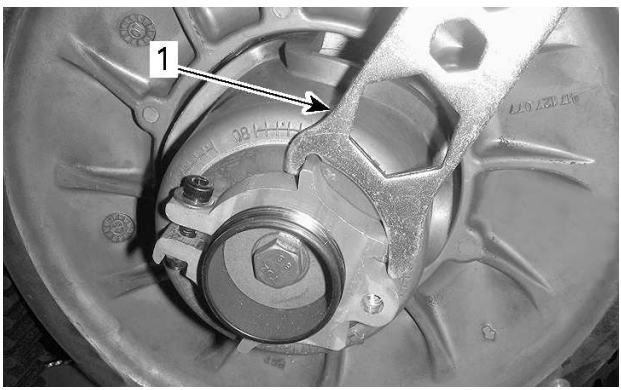


1. *Suspension adjustment tool*

**NOTE:**
The adjustment ring has left hand treads.

Repeat step 4 until the lowest portion of the cogs on the external surface of drive belt is even with the driven pulley edge.

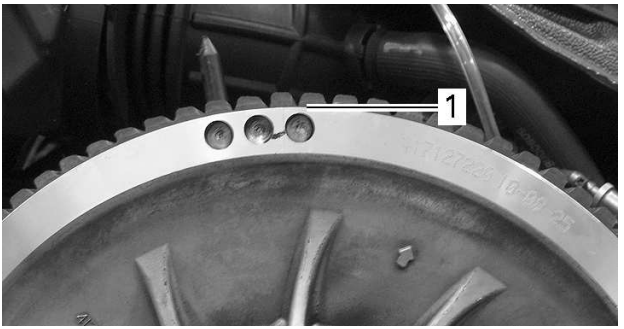


***TYPICAL - PRELIMINARY SETTING***

*1. Lowest portion of cogs even with external surface of drive belt*

**NOTE:**
Turning the ring counterclockwise lowers the drive belt in the pulley. Turning the ring clockwise raises the drive belt in the pulley.

5. Firmly tighten the clamping bolt. If possible, tighten to specified torque using a torque wrench.

| TIGHTENING TORQUE | |
|---|---|
| Clamping bolt | 5.5 ± 0.5 Nm (49 ± 4 lbf-in) |

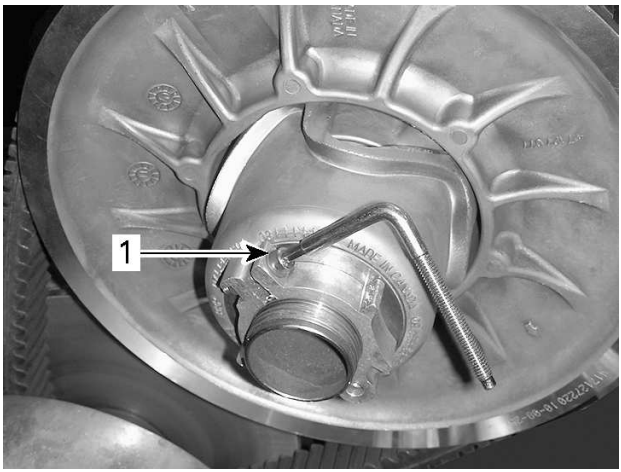


*TYPICAL*

*1. Clamping bolt*

6. Install drive belt guard.
7. Install side panel.

**NOTE:**
These settings are correct as a preliminary adjustment for most models. In some cases, when starting the engine, the vehicle could creep, indicating that the drive belt is too tight.

If the vehicle creeps, lower the drive belt height from the preliminary setting. Repeat procedure until creeping stops.

## Reverse Activation

**NOTE:**
The reverse may not activate if the belt is positioned too high in the driven pulley. If reverse activation does not work properly, ensure the drive belt is properly adjusted. Adjust the drive belt lower in the driven pulley if needed.

## Track

***Track Condition***

**⚠ WARNING**

**Remove tether cord cap from engine cut-off switch before performing any maintenance or adjustment, unless otherwise specified. Vehicle must be parked in a safe place, away from the trail.**

Remove tether cord cap from engine cut-off switch.

Lift the rear of the snowmobile and support it with a wide-base snowmobile mechanical stand with a rear deflector panel. With the engine off, rotate the track by hand, and inspect condition. If worn or cut, or if track fibers are exposed, or if missing or defective inserts or guides are noted; contact an authorized BRP snowmobile dealer.

***Snowmobiles Equipped with Traction Enhancing Products***

If your snowmobile is equipped with a BRP approved studded track, PROCEED WITH A VISUAL INSPECTION OF YOUR TRACK BEFORE EACH USE.

Look for any defects, such as:

- Perforations in the track
- Tears in the track (particularly around traction holes on studded tracks)
- Lugs that are broken or torn off, exposing portions of rods
- Delamination of the rubber
- Broken rods
- Broken studs (studded tracks)
- Bent studs (studded tracks)
- Missing studs
- Studs that are torn off the track
- Missing track guide(s)
- Also, ensure that studs nut are tighten to the recommended torque.

On approved studded tracks, replace broken or damaged studs immediately. If your track shows signs of deterioration, it must be replaced immediately. When in doubt, ask your dealer.

**⚠ WARNING**

**Riding with a damaged track or studs could lead to a loss of control.**

For complete information on traction enhancing products, refer to *TRACTION ENHANCING PRODUCTS* in *SAFETY INFORMATION* at the beginning of this Operator's Guide.

***Track Tension and Alignment***

**NOTE:**
Track tension and alignment are interrelated. Do not adjust one without the other.

**⚠ WARNING**

**To prevent serious injury to individuals near the snowmobile:**

- **NEVER stand behind or near a moving track.**
- **Always use a wide-base snowmobile stand with a rear deflector panel if it is necessary to rotate track.**
- **When the track is raised off the ground, only run it at the lowest possible speed.**

**Centrifugal force could cause debris, damaged or loose studs, pieces of torn track, or an entire severed track to be violently thrown backwards out of the tunnel with tremendous force, possibly resulting in the loss of a leg or other serious injury.**

## Verifying the Track Tension

**NOTE:**
Ride the snowmobile in snow about 15 to 20 minutes prior to adjusting track tension.

1. Remove tether cord cap from engine cut-off switch.
2. Lift rear of vehicle and support it off the ground.

**⚠ CAUTION**

**Use proper lifting techniques, notably using your legs force. Do not attempt to lift the rear of vehicle if it is above your limits.**

3. Allow rear suspension to fully extend.
4. Prepare the tensiometer.

| Service tool | |
|---|---|
| Tensiometer (P/N 414348200) |  |

1. Set the bottom O-ring as per the *Track Deflection* from the applicable vehicle in the *Technical Specifications* table.




*1. Bottom O-ring*

2. Place the upper O-ring to 0 kgf (0 lbf).




*1. Upper O-ring*

5. Position the tensiometer on track, halfway between front and rear idler wheels.
6. Push the tensiometer downwards until bottom O-ring (deflection set earlier) be aligned with the bottom of slider shoe.

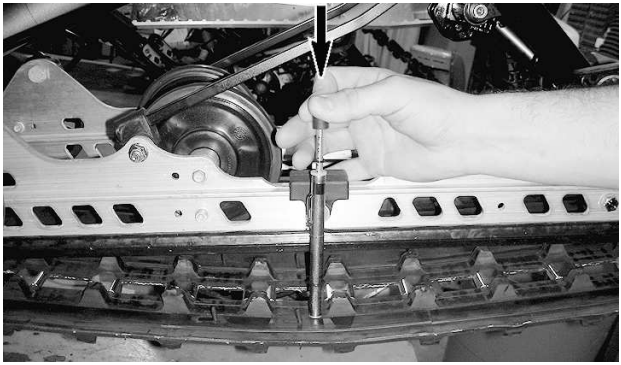

***TYPICAL***

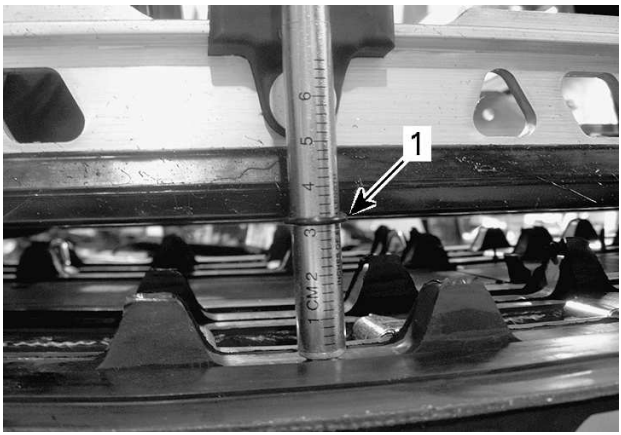


***TYPICAL***

*1. Deflection O-ring aligned with slider shoe*

7. Read load recorded by the upper O-ring on the tensiometer.




***TYPICAL - LOAD READING***

*1. Upper O-ring*

8. Load reading must be as per the track deflection in the *Technical Specifications*.
9. If load reading is not in accordance with the specification, adjust track tension. Refer to *Track Tension Adjustment*.

## Adjusting the Track Tension

1. Remove tether cord cap from engine cut-off switch.

| ⚠ CAUTION |
| --- |
| **Use proper lifting techniques, notably using your legs force. Do not attempt to lift the rear of vehicle if it is above your limits.** |

2. Remove wheel caps.
3. Loosen the rear axle screws on both sides.
4. Tighten or loosen both adjustment screws (equally) to increase or decrease track tension.

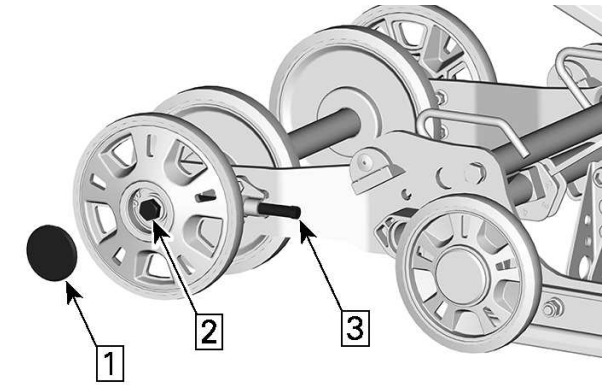


*SC-5U*

1. *Remove cap*
2. *Loosen the axle screw or nut*
3. *Tighten or loosen adjustment screws*

5. If correct tension is unattainable, contact an authorized BRP snowmobile dealer.
6. Retighten the rear axle fasteners to specification.

| TIGHTENING TORQUE | |
|---|---|
| Rear idler wheel retaining screws | 48 ± 6 Nm (35 ± 4 lbf-ft) |

7. Check track alignment as described below.

## Aligning the Track

**⚠ WARNING**

**Before checking track alignment, ensure that the track is free of all particles which could be thrown out while track is rotating. Keep hands, tools, feet and clothing clear of track. Always lift the snowmobile on a wide-base stand with a rear deflector panel. Ensure no one is standing in close proximity to the snowmobile, especially at the rear of the track. Never rotate track at high speed.**
**Centrifugal force could cause debris, damaged or loose studs, pieces of torn track, or an entire severed track to be violently thrown backwards out of the tunnel with tremendous force.**

1. Lift rear of vehicle and support it off the ground.

**⚠ CAUTION**

**Use proper lifting techniques, notably by using the force of your legs . Do not attempt to lift the rear of vehicle if it is above your limits.**

2. Start engine and accelerate slightly so that track slowly turns. This must be done in a short period of time (15 to 20 seconds).
3. Check that the track is well centered; equal distance on both sides between edges of track guides and slider shoes.

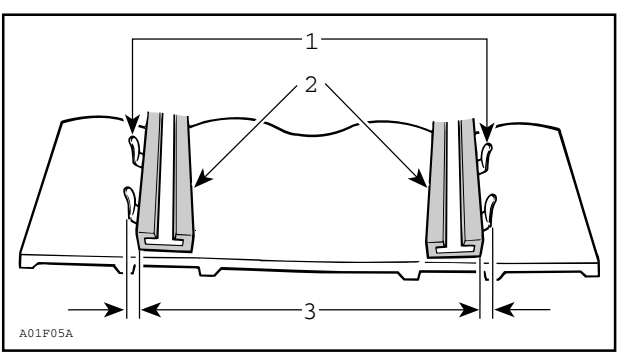


*1. Guides*
*2. Slider shoes*
*3. Equal distance*

4. To correct track alignment:

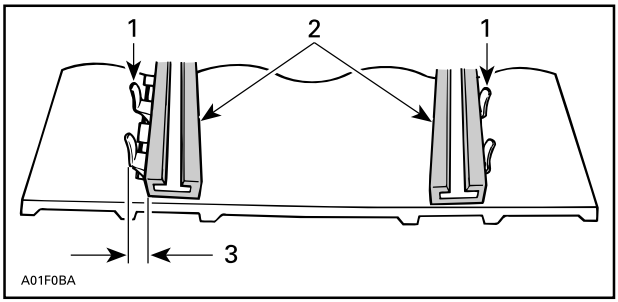


*1. Guides*
*2. Slider shoes*
*3. Tighten on this side*

1. Stop engine.
2. Remove tether cord cap from engine cut-off switch.

**⚠ WARNING**

**Remove tether cord cap from engine cut-off switch before performing any maintenance or adjustment, unless otherwise specified. Vehicle must be parked in a safe place, away from the trail.**

3. Loosen the rear axle nut.
4. Tighten adjustment screw on side where the slider shoe is the farthest from the track insert guides.

5. Tighten the rear axle nut.

**⚠ WARNING**

**Properly tighten wheel retaining bolt, otherwise wheel may come off and cause track to "lock".**

6. Restart engine and rotate track slowly to recheck alignment.
7. Tighten the rear axle nut to specified torque.

| Tightening Torque | |
|---|---|
| Rear axle screw | 48 ± 6 Nm (35 ± 4 lbf-ft) |

8. Reposition snowmobile on the ground.

## Suspension

### *Rear Suspension Condition*

Visually inspect all suspension components including slider shoes, springs, wheels, etc.

**NOTE:**
During normal driving, snow will act as a lubricant and coolant for the slider shoes. Extensive riding on ice or sanded snow, will create excessive heat build-up and cause premature slider shoe wear.

### *Suspension Stopper Strap Condition*

Inspect stopper straps for wear and cracks, bolt and nut for tightness. If loose inspect holes for deformation. Replace as required. Tighten nut to specification.

| Tightening Torque | |
|---|---|
| Stopper strap nut | 10 ± 1 Nm (89 ± 9 lbf-in) |

### *Suspension Lubrication*

Lubricate the following suspension pivots at grease fittings. Refer to *Maintenance Schedule* for maintenance frequency.

| SERVICE PRODUCT |
|---|
| XPS Synthetic suspension grease |

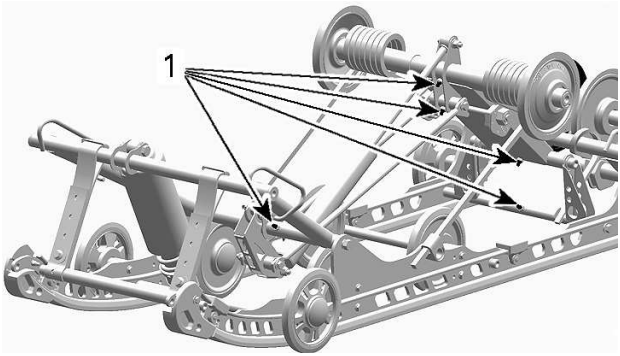


***SC-5U***

*1. Grease fittings*

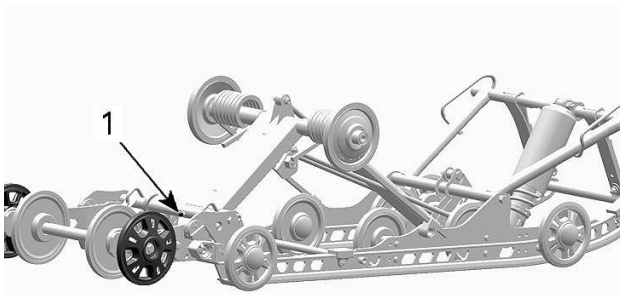


***SC-5U***

*1. Grease fittings*

***Steering and Front Suspension Condition***

Visually inspect steering and front suspension for tightness of components (steering arms, control arms and links, tie rods, ball joints, ski bolts, ski legs, etc.). If necessary, contact an authorized BRP snowmobile dealer.

## Skis

### *Wear and Condition of Skis and Runners*

Check the condition of the skis and ski runner carbides. If worn, contact an authorized BRP snowmobile dealer.

| ⚠ WARNING |
| --- |
| **Excessively worn skis and/or ski runners will adversely affect snowmobile control.** |

## Fuses

### *Access to Fuse Block*

Open RH side panel, refer to *Body and Seat*.

### *Fuses Location*

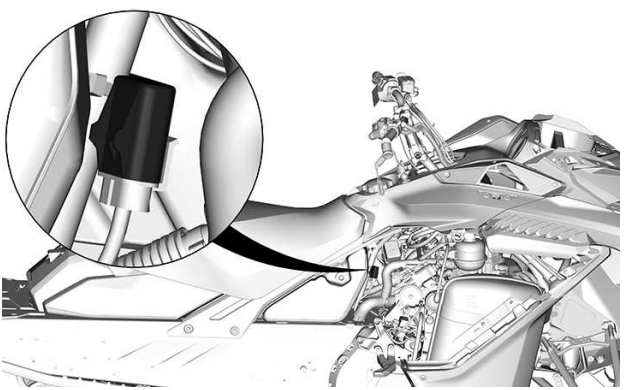

***TYPICAL – FA***

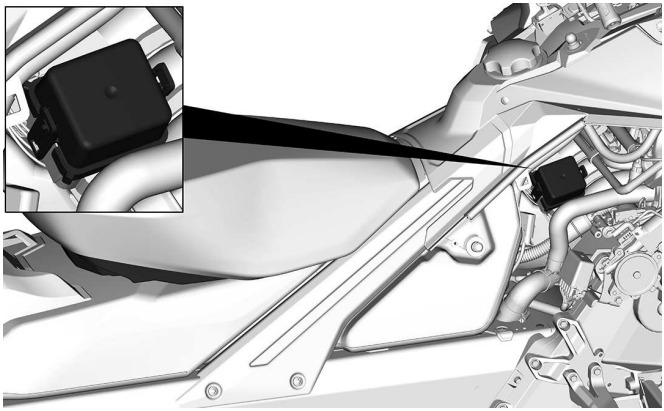

*TYPICAL – FUSE BOX 1 (FB1)*

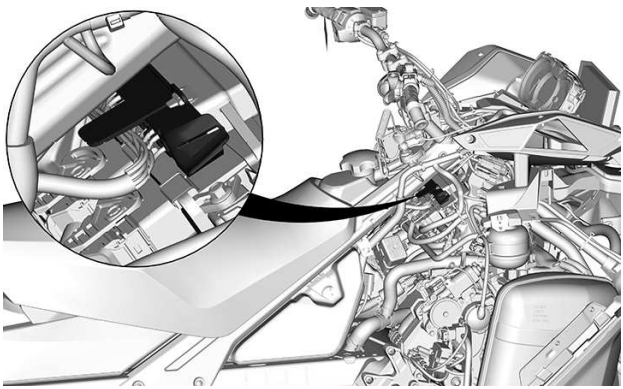

*TYPICAL – RELAY BLOCK - IF EQUIPPED*

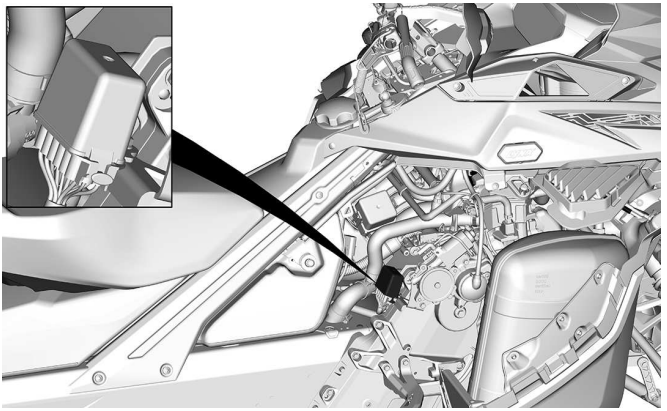

***TYPICAL – FUSE BOX 2 (FB2) - IF EQUIPPED***

Refer to *Technical Specification* for relay and fuse identification.

***Fuse Inspection***

Check fuse condition and replace it if necessary.

To remove fuse from holder, pull fuse out. Check if filament is melted.

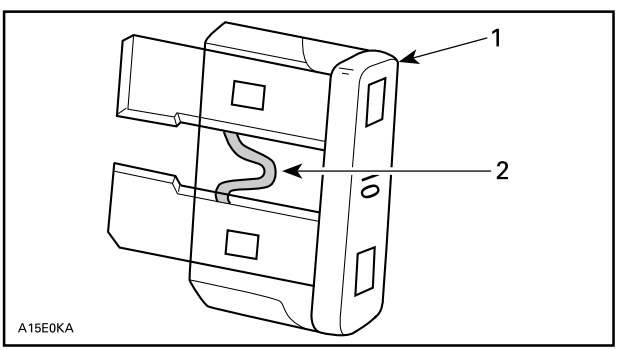


1. *Fuse*
2. *Check if melted*

**⚠ WARNING**

**Do not use a higher rated fuse.**

**⚠ WARNING**

**If fuse has burnt out, source of malfunction should be determined and corrected before restarting. See an authorized BRP snowmobile dealer for servicing.**

## Headlights

***Headlights Bulb Replacement***

1. Remove the windshield.
2. Open the storage compartment.

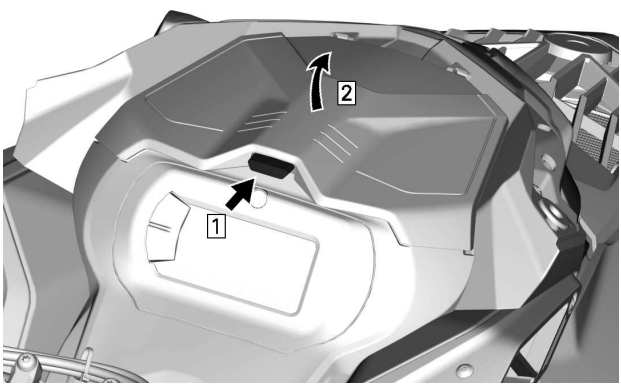


***TYPICAL***

3. Remove the gauge support retaining screws.

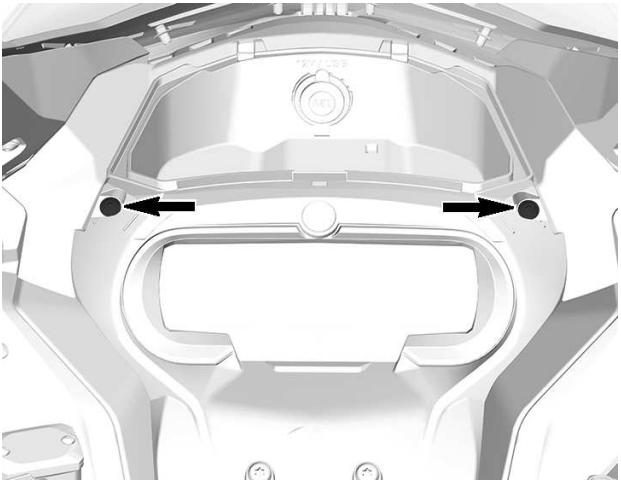

4. Lift the front of the gauge support, then slide it forward to remove it.

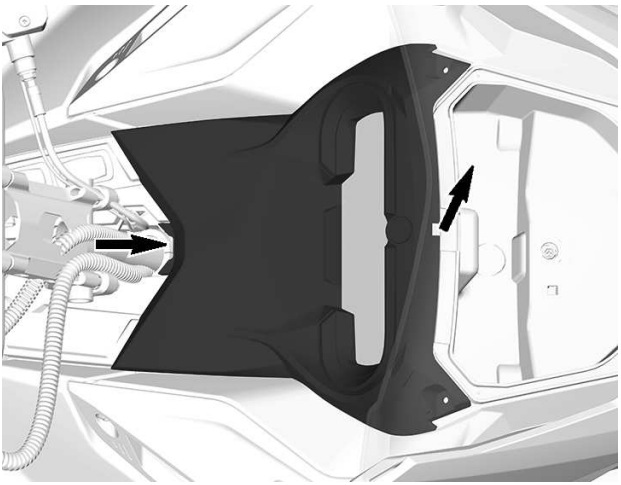

5. Set gauge support aside.
6. Remove the storage compartment.

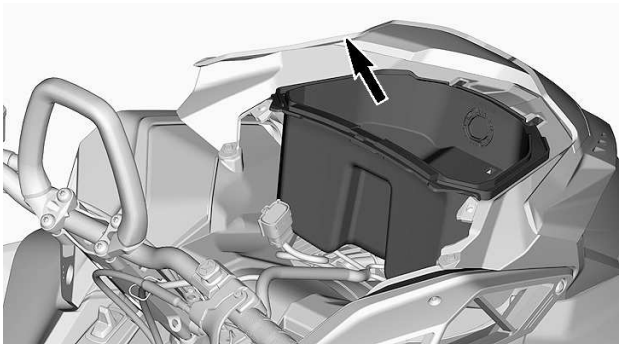

7. Disconnect 12V power outlet connectors to remove (if equipped).
8. Disconnect bulb connector.

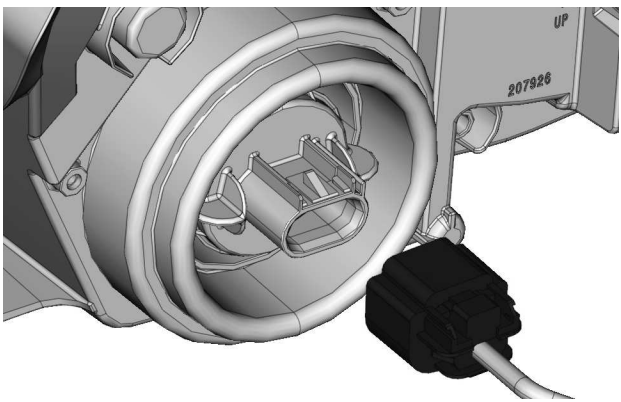


9. Unlock bulb by turning it counterclockwise.
10. Pull bulb out.

**NOTE:**
Ensure bulb seal stays in place.

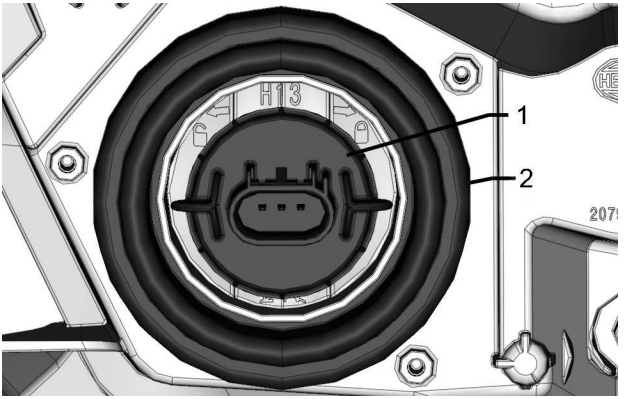


1. *Bulb*
2. *Bulb seal*

Install a new bulb using the reverse of the removal procedure.

## *NOTICE*

**Never touch glass portion of an halogen bulb with bare fingers, it shortens its operating life. If glass is touched, clean it with isopropyl alcohol which will not leave a film on the bulb.**

Check headlights operation.

***Headlights Beam Aiming***

Open the storage compartment.

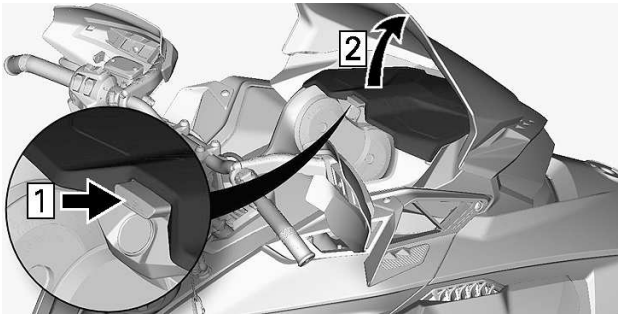


*TYPICAL*

Turn the adjustment screw to reach desired beam height.

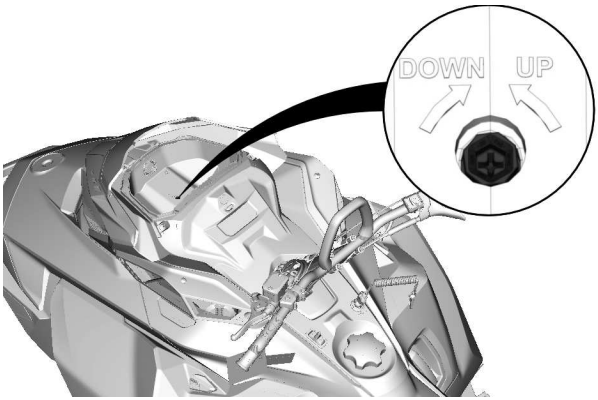


## Battery

***400 mm (16 in.) Tunnel Width***

## Removing the Battery

| NOTICE |
| --- |
| **Battery BLACK ( – ) cable must always be disconnected first and connected last.** |

1. Remove the seat.
2. Remove the battery cover.

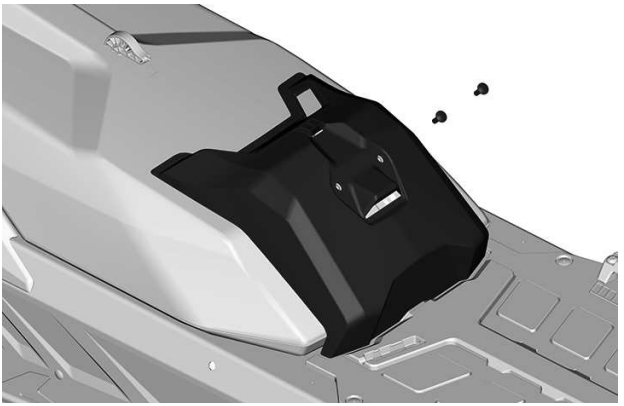

***TYPICAL***

3. Disconnect the negative terminal first, then the positive terminal.

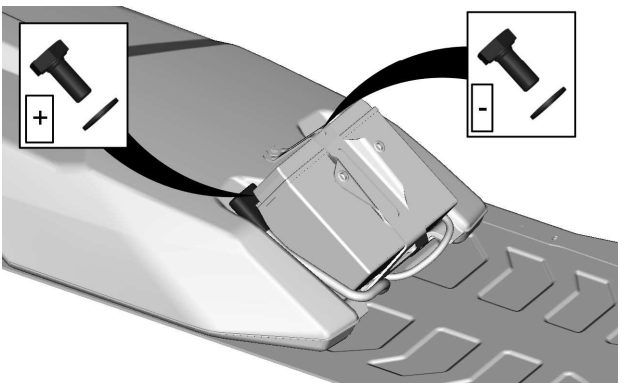


4. Remove the battery hold down bracket.

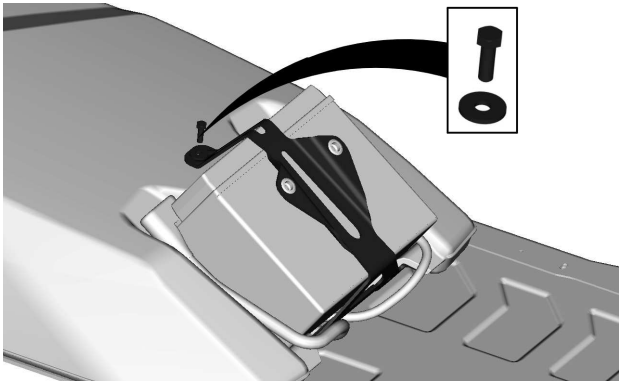

5. Remove the battery.

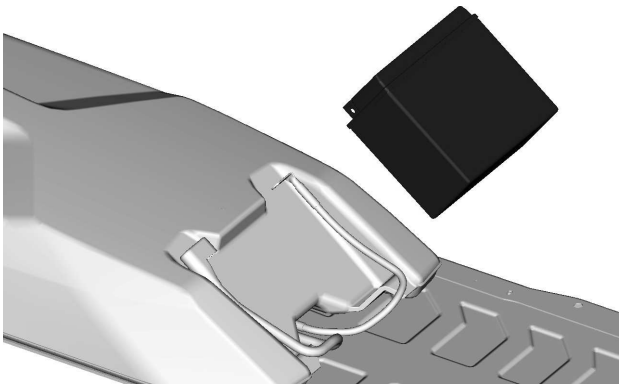

## Installing the Battery

The installation is the reverse of the removal procedure. However, pay attention to the following details.

| TIGHTENING TORQUE | |
|---|---|
| Battery terminals (positive and negative) | 10 ± 2 Nm (89 ± 18 lbf-in) |
| Battery hold down bracket | 5 ± 0.5 Nm (44 ± 4 lbf-in) |
| Battery cover retaining screws | 1.5 ± 0.5 Nm (13 ± 4 lbf-in) |

***500 and 600 mm (20 and 24 in.) Tunnel Width***

## Removing the Battery

1. Remove the passenger seat and backrest, if equipped.
2. Open the cargo box, remove the battery cover and all mounting screws.

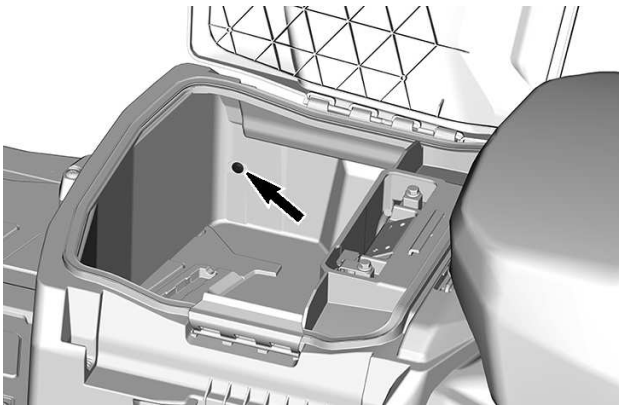

***LH SIDE SCREW SHOWN***

3. Remove the cargo box.



4. Disconnect the negative terminal first, then the positive terminal.

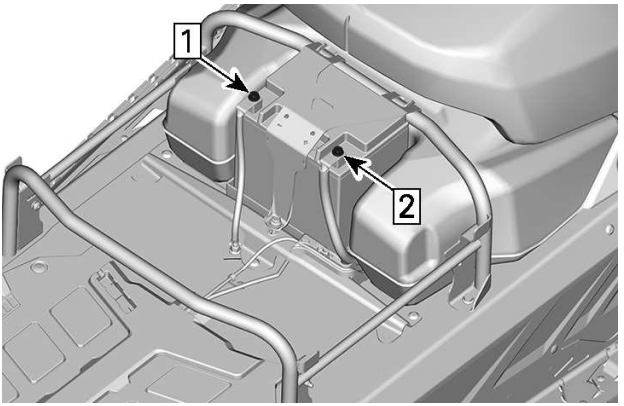


*1. Disconnect negative*
*2. Disconnect positive*

5. Remove the battery hold down bracket.

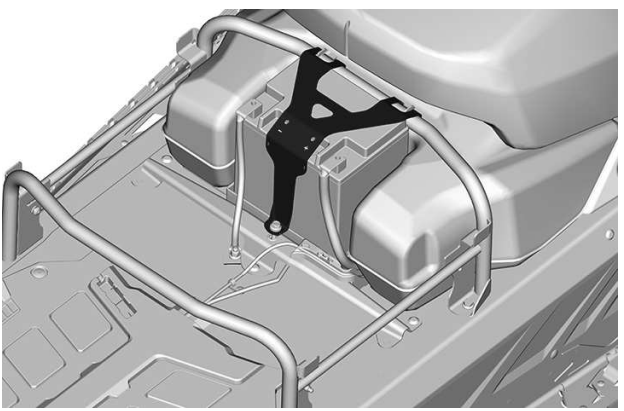

6. Remove the battery.

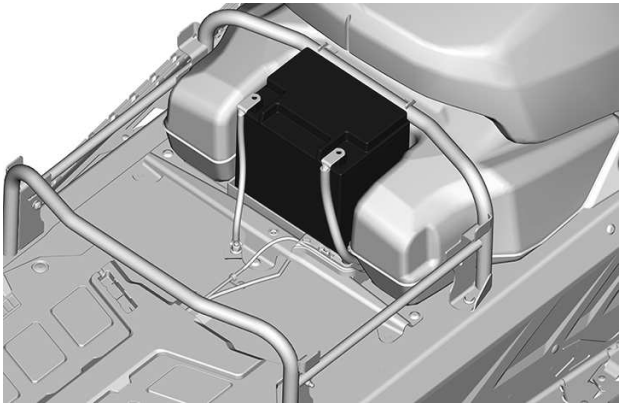

## Installing the Battery

The installation is the reverse of the removal procedure. However, pay attention to the following details.

| TIGHTENING TORQUE | |
|---|---|
| Battery terminals (positive and negative) | 10 ± 2 Nm (89 ± 18 lbf-in) |
| Battery hold down bracket | 5 ± 0.5 Nm (44 ± 4 lbf-in) |
| Battery cover retaining screws | 5 ± 0.5 Nm (44 ± 4 lbf-in) |

# VEHICLE CARE

## Post-Operation Care

Remove snow and ice from rear suspension, track, front suspension, steering mechanism and skis.

**⚠ WARNING**

**Make sure D.E.S.S. key is removed from D.E.S.S. post before standing in front the vehicle, getting close to the track or rear suspension components.**

Always cover your snowmobile when leaving it outside overnight or during extended periods of inactivity. This will protect it from frost and snow as well as help retain its appearance.

## Vehicle Cleaning and Protection

Wash snowmobile with water mixed with a mild detergent. Use only microfiber cloths or an equivalent.

***NOTICE***

**Never use a high pressure washer to clean the vehicle. USE LOW PRESSURE ONLY (EX: garden hose).**

***NOTICE***

**Never use XPS Brake and Parts Cleaner or any petroleum based cleaners on plastic parts.**

***Non Compatible Cleaning Products***

| material type | non-compatible cleaning Products |
|---|---|
| All plastics, vinyls, painted steel and aluminium. | BRAKE AND PARTS CLEANER OR ANY PETROLEUM BASE CLEANING PRODUCTS |

***Compatible Cleaning Products***

| material type | cleaning Product |
|---|---|
| All plastics, vinyls, painted steel and aluminium. | Soapy water<br>XPS Spray Cleaner and Polish<br>XPS All Purpose Cleaner |

For more information and products, Visit the XPS Products website at www.xpslubricants.com

# STORAGE

During summer, or when a snowmobile is not in use for more than three months, proper storage is necessary.

| Storage |
| --- |
| Clean the vehicle |
| Add fuel stabilizer to fuel following the product manufacturer recommendations.<br>Run the engine after adding the product to the fuel |
| Lubricate engine |
| Lubricate brake lever pivot |
| Lubricate rear suspension |
| Charge battery monthly to keep it fully charged during storage |
| Block muffler outlet with rags |
| Lift rear of vehicle until track is clear of the ground. Do not release track tension |

**⚠ CAUTION**

**Use appropriate lifting device or have assistance to share lifting stress. If a lifting device is not used, use proper lifting techniques, notably using your legs force. Do not attempt to lift the rear of vehicle if it is above your limits.**

***NOTICE***

**The snowmobile has to be stored in a cool and dry place and covered with an opaque but ventilated tarpaulin. This will prevent sun rays and grime from affecting plastic components and vehicle finish.**

***NOTICE***

**Fuel stabilizer should be added prior to engine lubrication to ensure carburetor protection against varnish deposits.**

# MAINTENANCE RECORDS

Send photocopy of maintenance record to BRP if needed.

| Pre-delivery | |
|---|---|
| Serial number: | Signature/Print: |
| Mileage / km: | |
| Hours: | |
| Date: | |
| Dealer no: | |
| Notes: | |
| | |
| Refer to vehicle Pre-Delivery Bulletin for detailed installation procedures | |

| First inspection | |
|---|---|
| Mileage / km: | Signature/Print: |
| Hours: | |
| Date: | |
| Dealer no: | |
| Notes: | |
| For maintenance schedule refer to Maintenance Information section of this operator's guide | |

| Service | |
|---|---|
| Mileage / km: | Signature/Print: |
| Hours: | |
| Date: | |
| Dealer no: | |
| Notes: | |
| For maintenance schedule refer to Maintenance Information section of this operator's guide | |

| Service | |
|---|---|
| Mileage / km: _____<br>Hours: _____<br>Date: _____<br>Dealer no: _____<br>Notes: _____ | Signature/Print: |
| For maintenance schedule refer to Maintenance Information section of this operator's guide | |

| Service | |
|---|---|
| Mileage / km: _____<br>Hours: _____<br>Date: _____<br>Dealer no: _____<br>Notes: _____ | Signature/Print: |
| For maintenance schedule refer to Maintenance Information section of this operator's guide | |

| Service | |
|---|---|
| Mileage / km: _____<br>Hours: _____<br>Date: _____<br>Dealer no: _____<br>Notes: _____ | Signature/Print: |
| For maintenance schedule refer to Maintenance Information section of this operator's guide | |

| Service | |
|---|---|
| Mileage / km: _____<br>Hours: _____<br>Date: _____<br>Dealer no: _____<br>Notes: _____ | Signature/Print: |
| For maintenance schedule refer to Maintenance Information section of this operator's guide | |

| Service | |
|---|---|
| Mileage / km: _____<br>Hours: _____<br>Date: _____<br>Dealer no: _____<br>Notes: _____ | Signature/Print: |
| For maintenance schedule refer to Maintenance Information section of this operator's guide | |

| Service | |
|---|---|
| Mileage / km: _____<br>Hours: _____<br>Date: _____<br>Dealer no: _____<br>Notes: _____ | Signature/Print: |
| For maintenance schedule refer to Maintenance Information section of this operator's guide | |

| Service | |
|---|---|
| Mileage / km: _____<br>Hours: _____<br>Date: _____<br>Dealer no: _____<br>Notes: _____ | Signature/Print: |
| For maintenance schedule refer to Maintenance Information section of this operator's guide | |

| Service | |
|---|---|
| Mileage / km: _____<br>Hours: _____<br>Date: _____<br>Dealer no: _____<br>Notes: _____ | Signature/Print: |
| For maintenance schedule refer to Maintenance Information section of this operator's guide | |

| Service | |
|---|---|
| Mileage / km: _____<br>Hours: _____<br>Date: _____<br>Dealer no: _____<br>Notes: _____ | Signature/Print: |
| For maintenance schedule refer to Maintenance Information section of this operator's guide | |

| Service | |
|---|---|
| Mileage / km: _____<br>Hours: _____<br>Date: _____<br>Dealer no: _____<br>Notes: _____ | Signature/Print: |
| For maintenance schedule refer to Maintenance Information section of this operator's guide | |

| Service | |
|---|---|
| Mileage / km: | Signature/Print: |
| Hours: | |
| Date: | |
| Dealer no: | |
| Notes: | |
| For maintenance schedule refer to Maintenance Information section of this operator's guide | |

| Service | |
|---|---|
| Mileage / km: | Signature/Print: |
| Hours: | |
| Date: | |
| Dealer no: | |
| Notes: | |
| For maintenance schedule refer to Maintenance Information section of this operator's guide | |

# TECHNICAL INFORMATION

# VEHICLE IDENTIFICATION

## Vehicle Description Decal

Vehicle description decal is located on right hand side of tunnel.

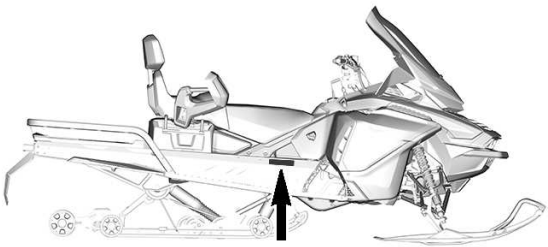

*TYPICAL*

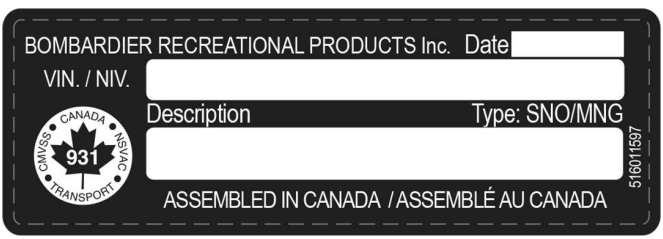





*FOR NORTH AMERICAN MARKET*

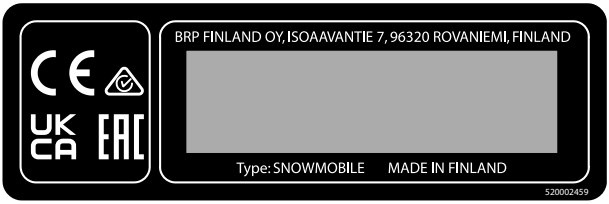


***FOR EUROPEAN MARKET***

## Identification Numbers

The main components of your snowmobile (engine and frame) are identified by different identification numbers. It may sometimes become necessary to locate these numbers for warranty purposes or to trace your snowmobile in the event of loss. These numbers are required by the authorized BRP snowmobile dealer to complete warranty claims properly. We strongly recommend that you take note of all the identification numbers on your snowmobile and supply them to your insurance company.

### *Vehicle Identification Number (VIN)*

VIN is scribed on vehicle description decal. See above. It is also engraved on tunnel near vehicle description decal.

Model number and model year are part of the information found in the VIN. See illustration.

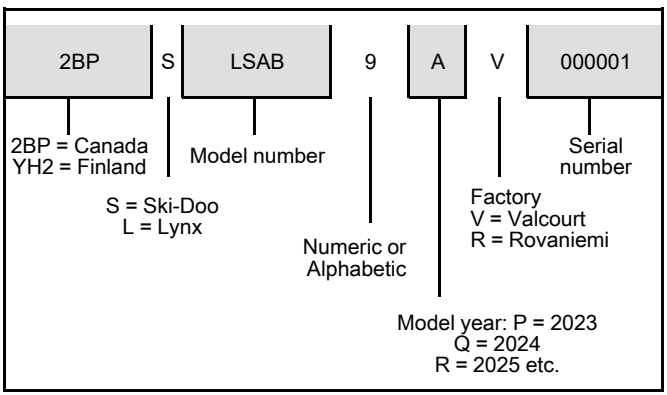

***Engine Identification Number Location***

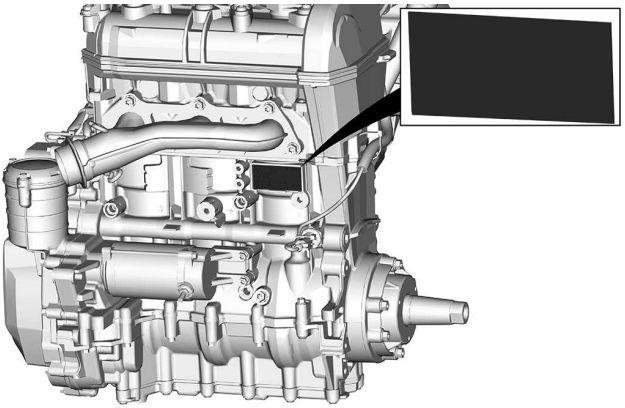

# COMPLIANCE LABELS

## EPA Compliance Label

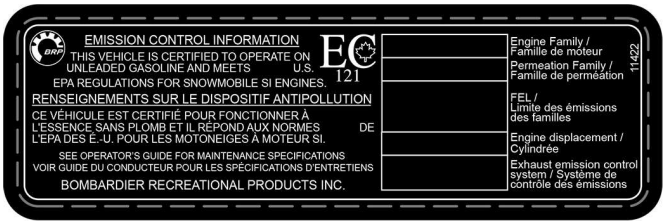


***EPA COMPLIANCE LABEL***

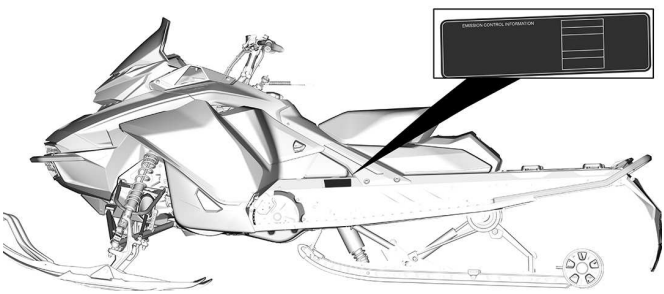

## SSCC Label

Safety standards for snowmobiles have been adopted by the Snowmobile Safety and Certification Committee (SSCC) of which BRP is a proud participating member. Assurance that your snowmobile meets these standards is easily checked by locating the Certification Label on a right vertical portion of the vehicle.

The following label shows that an independent testing laboratory has verified compliance with the SSCC safety standards.

CE MODÈLE A ÉTÉ ÉVALUÉ PAR UN LABORATOIRE D'ESSAIS INDÉPENDANT ET SATISFAIT TOUTES LES NORMES DE SÉCURITÉ DU SSCC EN VIGUEUR À LA DATE DE FABRICATION.

PARRAINÉ PAR LE COMITÉ DE SÉCURITÉ DE CERTIFICATION DE LA MOTONEIGE, INC.

CERTIFIED

PRINTED IN U.S.A.

CERTIFIÉ

THIS MODEL HAS BEEN EVALUATED BY AN INDEPENDENT TESTING LABORATORY AND IT MEETS ALL SSCC SAFETY STANDARDS IN EFFECT ON THE DATE OF ITS MANUFACTURE.

SPONSORED BY THE SNOWMOBILE SAFETY AND CERTIFICATION COMMITTEE, INC.

A00A1MA

*LABEL 2*

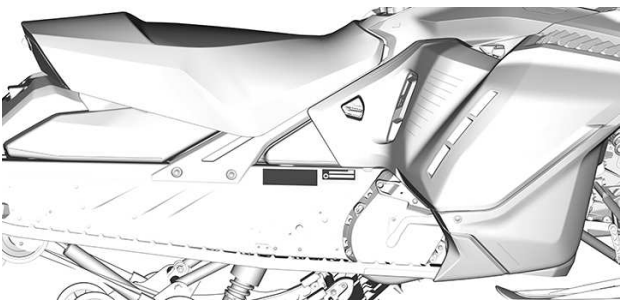

## Yellowstone National Park Compliance Label




*YELLOWSTONE NATIONAL PARK - COMPLIANCE LABEL*

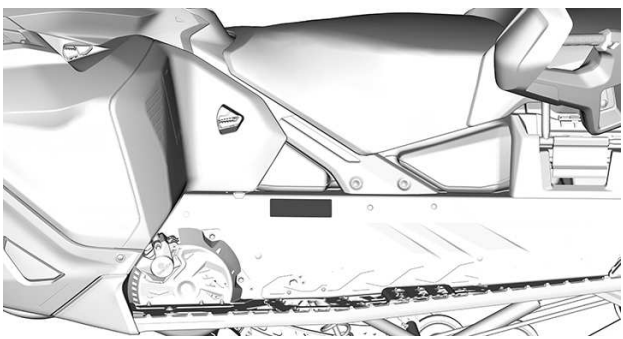

## Regulation (EU) 2016/1628 applicable for Non-Road Mobile Machineries

Vehicles who comply to Regulation (EU) 2016/1628 (NRMM) are identified on the engine valve cover.

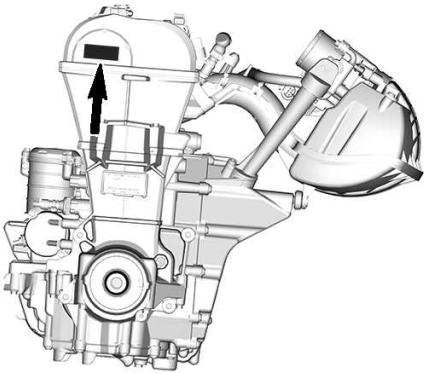

***TYPICAL***

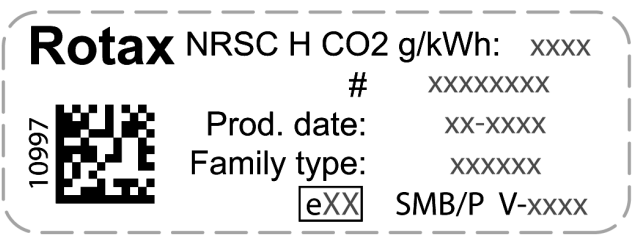


***NRMM IDENTIFICATION ON ENGINE***

Depending on your particular vehicle configuration, an additional NRMM identification decal may be installed on the tunnel, near the gearbox.

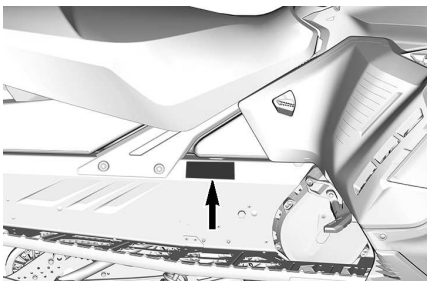

*TYPICAL - ON RH SIDE OF TUNNEL*




*NRMM IDENTIFICATION ON VEHICLE*

# NOISE EMISSION AND VIBRATION VALUES

| MODEL | | 600 ACE | 900 ACE |
|---|---|---|---|
| NOISE EMISSION AND VIBRATION VALUES[1] | | | |
| Noise | Sound power level ($L_{WA}$) | 90,4 dB @ 3625 RPM (Uncertainty ($K_{wa}$) 3 dB) | 91,2 dB @ 3625 RPM (Uncertainty ($K_{wa}$) 3 dB) |
| Vibration | Hand-arm system | <2.5 m/s$^2$ @ 3625 RPM | 3.15 m/s$^2$ @ 3625 RPM |
| | Whole body at seat | <0.5 m/s$^2$ @ 3625 RPM | <0.5m/s$^2$ @ 3625 RPM |
| [1]: Noise emission and Vibration values are measured in accordance with Annexes A and B of ISMA 1 regulation on a snow covered or grass surface in neutral or without belt. | | | |

| MODEL | | 900 ACE Turbo (130 hp) and Turbo R (180 hp) |
|---|---|---|
| NOISE EMISSION AND VIBRATION VALUES[1] | | |
| Noise | Sound power level ($L_{WA}$) | 99 dB @ 3625 RPM (Uncertainty ($K_{wa}$) 3 dB) |
| | Sound pressure ($L_{pA}$) | 92 dB @ 3625 RPM (Uncertainty ($K_{pa}$) 3 dB) |
| Vibration | Hand-arm system | <2.5 m/s$^2$ @ 3625 RPM |
| | Whole body at seat | <0.5m/s$^2$ @ 3625 RPM |
| [1]: Noise emission and Vibration values are measured in accordance with Annexes A and B of ISMA 1 regulation on a snow covered or grass surface in neutral or without belt. | | |

# EU DECLARATION OF CONFORMITY

565 de la Montagne Street
Valcourt (Québec) J0E 2L0
Canada

www.brp.com

ADVENTURE BY DESIGN

## EU Declaration of Conformity

**Authorized Representative**: BRP Europe N.V., Skaldenstraat 125, Gent, Belgium, 9042

This declaration of conformity is issued under the sole responsibility of the manufacturer.

The undersigned, representing the manufacturer, hereby declares that model year **2023 Snowmobiles** marked with the CE mark and a 17-character vehicle identification number (VIN) structured as **2BPSxxxxxPVxxxxxx** or **YH2SxxxxxPRxxxxxx** under commercial name **Ski-Doo** comply with all the relevant provisions of the following Directives and Regulations:

| | |
|---|---|
| Machinery Directive 2006/42/EC as amended up to and including Reg. 2019/1243/EU | ISO 12100:2010 |
| Non-Road Mobile Machinery (NRMM) Regulation (EU) 2016/1628 on gaseous pollutants | Category SMB, Stage V emissions limits |
| Electromagnetic Compatibility (EMC) Directive 2014/30/EU as amended up to and including Reg. (EU) 2018/1139 | CISPR 12:2007/A1:2009 & IEC 61000-6-1:2005 or UN R10.04 or later version |
| Battery Directive 2006/66/EC as amended up to and including Dir. (EU) 2018/849 | EN 50342-7:2015 |
| Radio Equipment (RED) Directive 2014/53/EU as amended up to and including Reg. 2018/1139 (If fitted with radio frequency (RF) D.E.S.S. key) | IEC 62368-1:2014<br>CISPR 25:2016<br>ISO 11452-2:2004<br>ETSI EN 300 330 V2.1.1:2017 |

Dominic Tessier
Dominic Tessier (24 Mar 2022 13:25 EST)

Dominic Tessier, Eng.
Director, Vehicle Engineering, Ski-Doo
Bombardier Recreational Products Inc.

Valcourt, QC, Canada

February 28th, 2022

ski-doo LYNX SEA-DOO EVINRUDE ROTAX can-am

# UK DECLARATION OF CONFORMITY

BRP Finland Oy
PL 8040 (Isoaavantie 7)
FI-96101 Rovaniemi, Finland
T 358 40 800 7700
F 358 16 318 114
www.brp.com

ADVENTURE BY DESIGN

## UK Declaration of Conformity

**Authorized Representative:** BRP Recreational Products UK Ltd., Castle Chambers, 43 Castle Street, Liverpool, L2 9SH

This declaration of conformity is issued under the sole responsibility of the manufacturer.

The undersigned, representing the manufacturer, hereby declares that model year **2023 Snowmobile** marked with the UKCA mark and a 17-character vehicle identification number (VIN) structured as **2BPSxxxxxPVxxxxxx** or **YH2SxxxxxPRxxxxxx** under commercial name **Ski-Doo** comply with all the relevant provisions of the following UK Statutory instrument and Regulations:

| | |
|---|---|
| The Supply of Machinery (Safety) Regulations 2008, UK Statutory Instrument 2008/1597 as amended up to and including SI 2020/1112 | ISO 12100:2010 |
| Non-Road Mobile Machinery (Type-Approval and Emission of Gaseous and Particulate Pollutants) Regulation 2018, UK SI 2018/764 as amended up to and including SI 2020/1393 | Category SMB,<br>Stage V emissions limits |
| Electromagnetic Compatibility Regulations 2016, UK SI 2016/1091 as amended up to and including SI 2020/1112 | CISPR 12:2007/A1:2009 &<br>IEC 61000-6-1:2005 or<br>UN R10.04 or later version |
| Batteries and Accumulators (Placing on the Market) Regulations 2008, UK SI 2008/2164 as amended up to and including UK SI 2020/904 | EN 50342-7:2015 |
| Radio Equipment Regulations 2017, UK SI 2017/1206 as amended up to and including SI 2020/1112 | IEC 62368-1:2014<br>CISPR 25:2016<br>ISO 11452-2:2004<br>ETSI EN 300 330 V2.1.1:2017 |

Dominic Tessier
Dominic Tessier (2 Mar 2022 13:22 EST)

Dominic Tessier, Eng.
Director, Vehicle Engineering, Ski-Doo
Bombardier Recreational Products Inc.

Valcourt, QC, Canada

February 28th, 2022

ski-doo LYNX SEA-DOO EVINRUDE ROTAX can-am

**Left blank for Eurasian Conformity mark where applicable**

# EPA CERTIFIED ENGINES

## Engine Emissions Information

***Manufacturer's Responsibility***

Snowmobile manufacturers of snowmobile engines need to determine the exhaust emission levels for each engine horsepower family and certify these engines with the United States of America Environmental Protection Agency (EPA). An emissions control information label, showing emission levels and engine specifications, must be placed on each vehicle at the time of manufacture.

***Dealer's Responsibility***

When performing service on a certified BRP snowmobiles that carry an emissions control information label, adjustments must be kept within published factory specifications.

Replacement or repair of any emission related component must be executed in a manner that maintains emission levels within the prescribed certification standards.

Dealers are not to modify the engine in any manner that would alter the horsepower or allow emission levels to exceed their predetermined factory specifications.

Exceptions include manufacturer's prescribed changes, such as altitude adjustments for example.

***Owner Responsibility***

The owner / operator is required to have engine maintenance performed to maintain emission levels within prescribed certification standards.

The owner / operator is not to, and should not allow anyone to modify the engine in any manner that would alter the horsepower or allow emissions levels to exceed their predetermined factory specifications.

***EPA Emission Regulations***

All BRP snowmobiles manufactured by BRP are certified to the EPA as conforming to the requirements of the regulations for the control of air pollution from new snowmobile engines. This certification is contingent on certain adjustments being set to factory standards. For this reason, the factory procedure for servicing the product must be strictly followed and, whenever practicable, returned to the original intent of the design.

The responsibilities listed above are general and in no way a complete listing of the rules and regulations pertaining to the EPA requirements on exhaust emissions for snowmobile products. For more detailed information on this subject, you may contact the following locations:

***MAIL:***

U.S. Environmental Protection Agency
Certification Division
Gasoline Engine Compliance Center
2000 Traverwood Drive
Ann Arbor MI 48105
USA

***INTERNET WEB SITE:***

www.epa.gov/otaq/

# RADIO FREQUENCY DIGITALLY ENCODED SECURITY SYSTEM (RF D.E.S.S. KEY)

This device complies with FCC Part 15 and Industry Canada license exempt RSS standard(s).

Operation is subject to the following two conditions: (1) this device may not cause interference, and (2) this device must accept any interference, including interference that may cause undesired operation of the device.

Changes or modifications not expressly approved by the party responsible for compliance could void the user's authority to operate the equipment.

IC Registration Number: 12006A-1001002222

FCC ID: 2ACER–1001002222

We, the party responsible for compliance, declare under our sole responsibility that the device is in conformity with the provisions of the following Council Directive: 2014/53/EU. To which this declaration relates is in conformity with the essential requirements and other relevant requirements. The product is in conformity with the following directives, harmonized standards and regulations:

Radio Equipment Directive (RED) 2014/53/EU and Harmonized Standards:

IEC 62368-1:2014, CISPR 25:2016, ISO 11452-2:2004, ETSI EN 300 330 V2.1.1:2017

Radio Equipment Statutory Instrument 2017/1206 and Designated Standards:

IEC 62368-1:2014, CISPR 25:2016, ISO 11452-2:2004, ETSI EN 300 330 V2.1.1:2017

# MULTIFUNCTION GAUGE REGULATORY INFORMATION

***Technical Information***

Transmitter:

– BT operating frequency range: 2402 - 2480 MHz
– BT version: 4.2 (no BTLE)
– BT output power: < 8.5 dBm

Receiver:

– FM operating range: 76 - 108 MHz

**Manufacturer and Address**

Manufacturer:

– Robert Bosch LLC

Address:

– 38000 Hills Tech Drive,
Farmington Hills, MI 48331,
USA

To display the regulatory information on the vehicle digital display: From the home screen, access the main menu and keep the joystick pressed down for more than 10 seconds.

***USA and Canada***

This device complies with FCC Part 15 and Industry Canada license exempt RSS standard (s). Operation is subject to the following two conditions:
(1) this device may not cause interference, and
(2) this device must accept any interference, including interference that may cause undesired operation of the device.

Le présent appareil est conforme aux CNR d'Industrie Canada applicables aux appareils radio exempts de licence. L'exploitation est autorisée aux deux conditions suivantes:
(1) l'appareil ne doit pas produire de brouillage, et
(2) l'utilisateur de l'appareil doit accepter tout brouillage radioélectrique subi, même si le brouillage est susceptible d'en compromettre le fonctionnement.

Changes or modifications not expressly approved by the party responsible for compliance could void the user's authority to operate the equipment.

IC: 22868 - VDIBRHS01

FCC ID: 2AMJS - VDIBRHS01

RF exposure:

- The equipment complies with FCC RF exposure limits set forth for an uncontrolled environment.
- This equipment must be installed and operated with a separation distance of at least 20 cm from all persons.
- The antenna(s) used for this transmitter must not be co-located or operating in conjunction with any other antenna or transmitter.

***Mexico***

IFETEL

Marca: Robert Bosch LLC

Modelo(s): VIPHI2BT

Número: RCPBOVI18-0967

NOM-121-SCT1-2009

La operación de este equipo está sujeta a las siguientes dos condiciones: (1) es posible que este equipo o dispositivo no cause interferencia perjudicial y (2) este equipo o dispositivo debe aceptar cualquier interferencia, incluyendo la que pueda causar su operación no deseada.

***Brazil***




03473-18-04473

Este equipamento opera em caráter secundário, isto é, não tem direito a proteção contra interferência prejudicial, mesmo de estações do mesmo tipo, e não pode causar interferência a sistemas operando em caráter primário.

***Japan***

This device is granted pursuant to the Japanese Radio Law (電波法) and the Japanese Telecommunications Business Law (電気通信事業法). This device should not be modified (otherwise the granted designation number will become invalid).

## *Europe*

## Declaration of Conformity

Simplified EU Declaration of Conformity according Radio Equipment Directive 2014/53/EU.

DE
Hiermit erklärt Robert Bosch LLC, dass der Funkanlagentyp VIPHI2BT der Richtlinie 2014/53/EU entspricht.
Der vollständige Text der EU-Konformitätserklärung ist unter der folgenden Internetadresse verfügbar: eu-doc.bosch.com
FR
Le soussigné, Robert Bosch LLC, déclare que l'équipement radioélectrique du type VIPHI2BT est conforme à la directive 2014/53/UE.
Le texte complet de la déclaration UE de conformité est disponible à l'adresse internet suivante:eu-doc.bosch.com
BG
С настоящото Robert Bosch LLC декларира, че този тип радиосъоръжение VIPHI2BT е в съответствие с Директива 2014/53/ЕС.
Цялостният текст на ЕС декларацията за съответствие може да се намери на следния интернет адрес: eu-doc.bosch.com
EL
Με την παρούσα ο/η Robert Bosch LLC, δηλώνει ότι ο ραδιοεξοπλισμός VIPHI2BT πληροί την οδηγία 2014/53/ΕΕ.
Το πλήρες κείμενο της δήλωσης συμμόρφωσης ΕΕ διατίθεται στην ακόλουθη ιστοσελίδα στο διαδίκτυο: eu-doc.bosch.com
CS
Tímto Robert Bosch LLC prohlašuje, že typ rádiového zařízení VIPHI2BT je v souladu se směrnicí 2014/53/EU.
Úplné znění EU prohlášení o shodě je k dispozici na této internetové adrese: eu-doc.bosch.com
DA
Hermed erklærer Robert Bosch LLC, at radioudstyrstypen VIPHI2BT er i overensstemmelse med direktiv 2014/53/EU.
EU-overensstemmelseserklæringens fulde tekst kan findes på følgende internetadresse: eu-doc.bosch.com
ET
Käesolevaga deklareerib Robert Bosch LLC, et käesolev raadioseadme tüüp VIPHI2BT vastab direktiivi 2014/53/EL nõuetele.
ELi vastavusdeklaratsiooni täielik tekst on kättesaadav järgmisel internetiaadressil: eu-doc.bosch.com
ES
Por la presente, Robert Bosch LLC declara que el tipo de equipo radioeléctrico VIPHI2BT es conforme con la Directiva 2014/53/UE.
El texto completo de la declaración UE de conformidad está disponible en la dirección Internet siguiente: eu-doc.bosch.com
FI
Robert Bosch LLC vakuuttaa, että radiolaitetyyppi VIPHI2BT on direktiivin 2014/53/EU mukainen.
EU-vaatimustenmukaisuusvakuutuksen täysimittainen teksti on saatavilla seuraavassa internetosoitteessa: eu-doc.bosch.com
EN
Hereby, Robert Bosch LLC declares that the radio equipment type VIPHI2BT is in compliance with Directive 2014/53/EU.
The full text of the EU declaration of conformity is available at the following internet address: eu-doc.bosch.com
HR
Robert Bosch LLC ovime izjavljuje da je radijska oprema tipa VIPHI2BT u skladu s Direktivom 2014/53/EU.
Cjeloviti tekst EU izjave o sukladnosti dostupan je na sljedećoj internetskoj adresi: eu-doc.bosch.com
HU
Robert Bosch LLC igazolja, hogy a VIPHI2BT típusú rádióberendezés megfelel a 2014/53/EU irányelvnek.
Az EU-megfelelőségi nyilatkozat teljes szövege elérhető a következő internetes címen: eu-doc.bosch.com
IT
Il fabbricante, Robert Bosch LLC, dichiara che il tipo di apparecchiatura radio VIPHI2BT è conforme alla direttiva 2014/53/UE.
Il testo completo della dichiarazione di conformità UE è disponibile al seguente indirizzo Internet: eu-doc.bosch.com

LT
Aš, Robert Bosch LLC, patvirtinu, kad radijo įrenginių tipas VIPHI2BT atitinka Direktyvą 2014/53/ES.
Visas ES atitikties deklaracijos tekstas prieinamas šiuo interneto adresu: eu-doc.bosch.com
LV
Ar šo Robert Bosch LLC deklarē, ka radioiekārta VIPHI2BT atbilst Direktīvai 2014/53/ES.
Pilns ES atbilstības deklarācijas teksts ir pieejams šādā interneta vietnē: eu-doc.bosch.com
MT
B'dan, Robert Bosch LLC, niddikjara li dan it-tip ta' tagħmir tar-radju VIPHI2BT huwa konformi mad-Direttiva 2014/53/UE.
It-test kollu tad-dikjarazzjoni ta' konformità tal-UE huwa disponibbli f'dan l-indirizz tal-Internet li ġej: eudoc.bosch.com
NL
Hierbij verklaar ik, Robert Bosch LLC, dat het type radioapparatuur VIPHI2BT conform is met Richtlijn 2014/53/EU.
De volledige tekst van de EU-conformiteitsverklaring kan worden geraadpleegd op het volgende internetadres: eudoc.bosch.com
PL
Robert Bosch LLC niniejszym oświadcza, że typ urządzenia radiowego VIPHI2BT jest zgodny z dyrektywą 2014/53/UE.
Pełny tekst deklaracji zgodności UE jest dostępny pod następującym adresem internetowym: eu-doc.bosch.com
PT
O(a) abaixo assinado(a) Robert Bosch LLC declara que o presente tipo de equipamento de rádio VIPHI2BT está em conformidade com a Diretiva 2014/53/UE.
O texto integral da declaração de conformidade está disponível no seguinte endereço de Internet: eudoc.bosch.com
RO
Prin prezenta, Robert Bosch LLC declară că tipul de echipamente radio VIPHI2BT este în conformitate cu Directiva 2014/53/UE.
Textul integral al declarației UE de conformitate este disponibil la următoarea adresă internet: eu-doc.bosch.com
SV
Härmed försäkrar Robert Bosch LLC att denna typ av radioutrustning VIPHI2BT överensstämmer med direktiv 2014/53/EU.
Den fullständiga texten till EU-försäkran om överensstämmelse finns på följande webbadress: eu-doc.bosch.com
SL
Robert Bosch LLC potrjuje, da je tip radijske opreme VIPHI2BT skladen z Direktivo 2014/53/EU.
Celotno besedilo izjave EU o skladnosti je na voljo na naslednjem spletnem naslovu: eu-doc.bosch.com
SK
Robert Bosch LLC týmto vyhlasuje, že rádiové zariadenie typu VIPHI2BT je v súlade so smernicou 2014/53/EÚ.
Úplné EÚ vyhlásenie o zhode je k dispozícii na tejto internetovej adrese: eu-doc.bosch.com
IS
Robert Bosch LLC lýsir því hér með yfir að þráðlausi fjarskiptabúnaðurinn VIPHI2BT er í samræmi við tilskipun 2014/53/ESB.
Óstyttan texta ESB-samræmisyfirlýsingarinnar er að finna á veffanginu: eu-doc.bosch.com
Liechtenstein
Hiermit erklärt Robert Bosch LLC, dass der Funkanlagentyp VIPHI2BT der Richtlinie 2014/53/EU entspricht.
Der vollständige Text der EU-Konformitätserklärung ist unter der folgenden Internetadresse verfügbar: eudoc.bosch.com
NO
Hermed erklærer Robert Bosch LLC at radioutstyrstypen VIPHI2BT er i samsvar med direktiv 2014/53/EU.
Hele teksten i EU-samsvarserklæringen finnes på følgende internettadresse: eu-doc.bosch.com

# TECHNICAL SPECIFICATIONS

# ENGINE

## 600 ACE

| ENGINE | 600 ACE |
|---|---|
| Engine type | Rotax 600, liquid cooled, 4-stroke, D.O.H.C., dry sump. |
| Number of cylinder | 2 |
| Bore | 74 mm (2.91 in) |
| Stroke | 69.7 mm (2.74 in) |
| Displacement | 600 cm³ (36.6 in³) |
| Maximum power engine speed | 7250 RPM |

| FUEL SYSTEM | | |
|---|---|---|
| Fuel delivery | | Multi point EFI, 46 mm heated throttle body |
| Idle speed | At ECO Mode (not adjustable) | 1500 ± 200 RPM |
| | STD/ Sport Mode (not adjustable) | 1700 ± 200 RPM |

| ELECTRICAL SYSTEM | | | |
|---|---|---|---|
| Total system output | | | 30 A @ 14.5 V 420 W or 650 W @ 6000 RPM |
| Spark plug(1) | Type | 600 ACE | NGK MR7BI-8 or equivalent |
| | Gap | | Not adjustable 0.7 to 0.8 mm (.028 to .031 in) |

| LUBRICATION SYSTEM | | | |
|---|---|---|---|
| Engine oil(2) | Type | | 4T 0W40 Synthetic oil |
| | Quantity | 600 ACE | Oil change and filter, 2.1 l (2.22 qt(liq.,US)) |

## 900 ACE

| ENGINE | 900 ACE |
|---|---|
| Engine type | Rotax 903, liquid cooled, 4-stroke, D.O.H.C., dry sump |
| Number of cylinder | 3 |
| Bore | 74 mm (2.9 in) |
| Stroke | 69.7 mm (2.74 in) |
| Displacement | 899 $cm^3$ (54.9 $in^3$) |
| Maximum power engine speed | 7250 ± 200 RPM |

| FUEL SYSTEM | | |
|---|---|---|
| Fuel delivery | | Multi point EFI, 46 mm heated throttle body |
| Idle speed (not adjustable) | Standard and ECO mode | 1300 ± 200 RPM |
| | Sport mode | 1500 ± 200 RPM |

| ELECTRICAL SYSTEM | | |
|---|---|---|
| Total system output | | 30 A @ 14.5 V<br>420 W or 650 W<br>@ 6000 RPM |
| Spark plug(1) | Type | NGK MR8BI-8 or equivalent |
| | Gap | Not adjustable 0.7 to 0.8 mm (.028 to .031 in) |

| LUBRICATION SYSTEM | | |
|---|---|---|
| Engine oil(2) | Type | XPS 4T 0W40 Synthetic oil |
| | Quantity | Oil change with filter: 3.3 l (3.5 qt(liq.,US)) |

## 900 ACE Turbo

| ENGINE | 900 ACE Turbo (130 hp) |
|---|---|
| Engine type | Rotax 903, liquid cooled, 4-stroke, D.O.H.C., dry sump, turbo without intercooler |
| Number of cylinder | 3 |
| Bore | 74 mm (2.9 in) |
| Stroke | 69.7 mm (2.74 in) |
| Displacement | 899 $cm^3$ (54.9 $in^3$) |
| Maximum power engine speed | 7400 ± 200 RPM |

| FUEL SYSTEM | | |
|---|---|---|
| Fuel delivery | | Multi point EFI, 46 mm heated throttle body |
| Idle speed (not adjustable) | Standard and ECO mode | 1300 ± 200 RPM |
| | Sport mode | 1650 ± 200 RPM |

| ELECTRICAL SYSTEM | | |
|---|---|---|
| Total system output | | 30 A @ 14.5 V 420 W or 650 W @ 6000 RPM |
| Spark plug(1) | Type | NGK LMAR9AI-8D or equivalent |
| | Gap | Not adjustable 0.7 to 0.8 mm (.028 to .031 in) |

| LUBRICATION SYSTEM | | |
|---|---|---|
| Engine oil(2) | Type | XPS 4T 0W40 Synthetic oil |
| | Quantity | Oil change with filter: 3.3 l (3.5 qt(liq.,US)) |

## 900 ACE Turbo R

| ENGINE | 900 ACE Turbo R (180 hp) |
|---|---|
| Engine type | Rotax 903, liquid cooled, 4-stroke, D.O.H.C., dry sump, turbo with intercooler |
| Number of cylinder | 3 |
| Bore | 74 mm (2.9 in) |
| Stroke | 69.7 mm (2.74 in) |
| Displacement | 899 cm³ (54.9 in³) |
| Maximum power engine speed | 7900 ± 200 RPM |

| FUEL SYSTEM | | |
|---|---|---|
| Fuel delivery | | Multi point EFI, 46 mm heated throttle body |
| Idle speed (not adjustable) | Standard and ECO mode | 1300 ± 200 RPM |
| | Sport mode | 1650 ± 200 RPM |

| ELECTRICAL SYSTEM | | |
|---|---|---|
| Total system output | | 30 A @ 14.5 V 420 W or 650 W @ 6000 RPM |
| Spark plug(1) | Type | NGK LMAR9AI-8D or equivalent |
| | Gap | Not adjustable 0.7 to 0.8 mm (.028 to .031 in) |

| LUBRICATION SYSTEM | | |
|---|---|---|
| Engine oil(2) | Type | XPS 4T 0W40 Synthetic oil |
| | Quantity | Oil change with filter: 3.3 l (3.5 qt(liq.,US)) |

# VEHICLE

## Expedition

| COOLING SYSTEM | | |
|---|---|---|
| Coolant type | Recommended | XPS Extended life pre-mixed coolant |
| | Alternative, or if not available | Ethyl glycol and distilled water (50%/ 50%) or coolant specifically formulated for aluminum engines |
| Coolant capacity | With radiator | 6.9 l (7.3 qt(liq.,US)) |
| | Without radiator | 5.9 l (6.2 qt(liq.,US)) |

| FUEL SYSTEM | | | |
|---|---|---|---|
| Fuel pump | | | In-tank electrical fuel pump |
| Fuel | 600 ACE 900 ACE | Type | Regular unleaded gasoline |
| | | Octane rating | 87 Pump Posted AKI (RON+MON)/2) 92 RON |
| | 900 ACE Turbo/ R | Type | Premium unleaded gasoline |
| | | Octane rating | 91 Pump Posted AKI (RON+MON)/2 95 RON |
| Fuel tank capacity | | Expedition Sport | 36 l (9.5 gal(liq.,US)) |
| | | Expedition LE/ SE/ Extreme | 42 l (11.1 gal(liq.,US)) |

| ELECTRICAL SYSTEM — EXPEDITION SPORT | | | |
|---|---|---|---|
| Battery | | | 12 V, 18 A•h |
| Headlamp | | | 2 x 60/55 W (H-13) |
| Taillight and stoplight | | | 2.6 W / 139m W LED |
| Fuses | FA | Main | 40 A |
| | F1 | Start / Relays | 5 A |
| | F2 | Accessories | 15 A |
| | F3 | Taillight / Brake / PAC | 10 A |
| | F4 | ECM / RFID / O2 Sensor / CAPS | 15 A |
| | F7 | Fuel Pump | 10 A |
| | F8 | Cluster | 15 A |
| | F9 | Fan | 15 A |
| | F10 | Headlamps | 20 A |
| Relays | RY1 | Main | – |
| | RY2 | Accessories | – |
| | RY3 | Fan | – |
| | RY4 | Lighting | – |

| ELECTRICAL SYSTEM — EXPEDITION LE/ SE 900 ACE | |
|---|---|
| Battery | 12 V, 30 A•h |
| Headlamp | 2 x 60/55 W (H-13) |
| Taillight and stoplight | 2.6 W / 139m W LED |

| ELECTRICAL SYSTEM — EXPEDITION LE/ SE 900 ACE | | | |
|---|---|---|---|
| Fuses | FA | Main | 40 A |
| | F1 | Clock / Start / Relays | 5 A |
| | F2 | Headlamps | 20 A |
| | F3 | Taillight / Brake / PAC | 10 A |
| | F4 | ECM / RFID / O2 Sensor / CAPS (with Compact Gauge) | 15 A |
| | | ECM / RFID / O2 Sensor / CAPS (with 7.2 or Large Panoramic Gauge) | 10 A |
| | F5 | Fuel Pump / Starter | 10 A |
| | F6 | Fan | 15 A |
| | F7 | Accessory | 15 A |
| | F8 | Cluster | 15 A |
| | F9 | ACS | 15 A |
| | F10 | RER | 30 A |
| Relays | RY1 | Main | – |
| | RY2 | Headlamps | – |
| | RY3 | Fan | – |
| | RY4 | Reverse | – |
| | RY5 | Accessories | – |

| ELECTRICAL SYSTEM — EXPEDITION LE/ SE 900 ACE | | | |
|---|---|---|---|
| | RY6 | Lighting | – |

| ELECTRICAL SYSTEM — 900 ACE TURBO and TURBO R | | | |
|---|---|---|---|
| Battery | | Expedition Extreme | 12 V, 18 A•h |
| | | Expedition LE Expedition SE | 12 V, 30 A•h |
| Headlamp | | | 2 x 60/55 W (H-13) |
| Taillight and stoplight | | | 2.6 W / 139m W LED |
| Fuses | FA | Main | 40 A |
| | F1 | Start | 5 A |
| | F2 | Accessories | 15 A |
| | F3 | Taillight / Brake / PAC | 10 A |
| | F4 | ECM / RFID / O2 Sensor (with Compact Gauge) | 15 A |
| | | ECM / RFID / O2 Sensor (with 7.2 or Large Panoramic Gauge) | 10 A |
| | F5 | ACS | 15 A |
| | F7 | Engine/ Fuel pump | 10 A |
| | F8 | Cluster | 15 A |
| | F9 | Fan | 15 A |

| ELECTRICAL SYSTEM — 900 ACE TURBO and TURBO R | | | |
|---|---|---|---|
| | F10 | Headlamps | 20 A |
| Relays – FB1 | RY1 | Main | - |
| | RY2 | Accessories | - |
| | RY3 | Fan | - |
| | RY4 | Lighting | - |
| Relays – FB2 | RY5 | Forward | - |
| | RY6 | Reverse | - |

| DRIVE SYSTEM - CHAINCASE | | | |
|---|---|---|---|
| Chaincase oil (if equipped) | Type | Recommended | XPS Synthetic chaincase oil |
| | | Alternative, or if not available | 75W140 gear oil that meets the API GL-5 specification |
| | Capacity | | 500 ml (16.9 fl oz(US)) |
| Chain drive ratio | | 600 ACE | 21/53 |
| | | 900 ACE Expedition Sport | 24/49 |

| DRIVE SYSTEM - GEARBOX | | | |
|---|---|---|---|
| Gearbox oil (if equipped) | Type | Recommended | XPS Synchromesh Transmission Synthetic Oil |
| | | Alternative, or if not available | 75W140 gear oil that meets the API GL-5 specification |

| DRIVE SYSTEM - GEARBOX | | | |
|---|---|---|---|
| | Capacity | | 900 ml (30.4 fl oz(US)) |
| Chain drive ratio | | 900 ACE<br>20 in. | 21/45 |
| | | 900 ACE<br>24 in. | 21/51 |
| | | 900 ACE Turbo/ R<br>20 in. | 27/49 |
| | | 900 ACE Turbo/ R<br>24 in. | 25/51 |
| Gearbox ratio | 900 ACE | Low | 4.24:1 |
| | | High | 2.36:1 |
| | 900 ACE Turbo | Low | 3.59::1 |
| | | High | 2.0:1 |

| DRIVE SYSTEM - PULLEYS | | | |
|---|---|---|---|
| Drive pulley | Type | 600 ACE | eDrive II |
| | | 900 ACE<br>900 ACE Turbo/ R | pDrive |
| | Engagement RPM | 600 ACE<br>900 ACE | 2200 ± 100 RPM |
| | | 900 ACE Turbo | 2100 ± 100 RPM |
| | | 900 ACE Turbo R | 2700 ± 100 RPM |
| Driven pulley | Type | 600 ACE<br>900 ACE | QRS-4S |

| DRIVE SYSTEM - PULLEYS | | | |
|---|---|---|---|
| | | 900 ACE Turbo/ R | QRS-4S Vent |

| DRIVE SYSTEM - TRACK | | | |
|---|---|---|---|
| Drive sprocket number of teeth | | | 8 |
| Track | Width | Expedition Sport | 40.6 cm (16 in) |
| | | Expedition LE | 50 cm (20 in) or 60 cm (24 in) |
| | | Expedition SE Expedition Extreme | 50 cm (20 in) |
| | Length | | 392.3 cm (154 in) |
| | Profile height | Expedition Sport Expedition LE | 38.1 mm (1.5 in) |
| | | Expedition SE | 38.1 mm (1.5 in) or 45.7 mm (1.8 in) |
| | | Expedition Extreme | 45.7 mm (1.8 in) |
| Track adjustment(3) | Deflection | 600 ACE | 45 mm (1.77 in) |
| | | Other engines | 35 mm (1.38 in) |
| | Force | | 7.3 kgf (16 lbf) |

| BRAKE SYSTEM | | |
|---|---|---|
| Brake | Type | Single 200 mm cross drilled carbon steel disc |
| Brake fluid | Type | DOT 4 |
| | Quantity | 65 ml (2.2 fl oz(US)) |
| Caliper | | Fixed twin pistons (2 x 40 mm) |
| Brake pad material | | Organic |
| Minimum brake pad thickness (includes backing plate) | | 5 mm (.2 in) |
| Minimum brake disc thickness | | 4.5 mm (.177 in) |
| Maximum brake disc warpage | | 0.25 mm (.01 in) |

| FRONT SUSPENSION | | |
|---|---|---|
| Suspension type | | RAS X |
| Suspension maximum travel | | 210 mm (8.3 in) |
| Shock absorber type | Expedition Sport - Except EUR | Motion Control |
| | Expedition Sport - EUR Expedition LE/ SE | HPG |
| | Expedition Extreme | HPG 36 |

| REAR SUSPENSION | | | |
|---|---|---|---|
| Suspension type | | | SC-5U |
| Suspension maximum travel<br>Measured at rear arm | | | 239 mm (9.4 in) |
| Shock absorber type | Center | Expedition Sport - Except EUR | Motion control |
| | | Expedition Sport - EUR<br>Expedition LE | HPG |
| | | All other models | Motion control |
| | Rear | Expedition Sport<br>Expedition LE | HPG |
| | | Expedition SE | ACS (Air Controlled Suspension) |
| | | Expedition Extreme | KYB 36 |

| WEIGHT AND DIMENSIONS | | |
|---|---|---|
| Mass (dry) | Expedition Sport 600 ACE | 241 kg (531 lb) |
| | Expedition Sport 900 ACE | 251 kg (553 lb) |
| | Expedition LE 20 in. 900 ACE | 290 kg (639 lb) |
| | Expedition LE 20 in. 900 ACE Turbo | 302 kg (664 lb) |
| | Expedition LE 20 in. 900 ACE Turbo R | 304 kg (670 lb) |
| | Expedition LE 24 in. 900 ACE<br>Expedition SE 900 ACE | 301 kg (663 lb) |

| WEIGHT AND DIMENSIONS | | |
|---|---|---|
| | Expedition LE 24 in. ACE Turbo | 312 kg (686 lb) |
| | Expedition SE 900 ACE Turbo<br>Expedition LE 24 in. ACE Turbo R | 315 kg (693 lb) |
| | Expedition Extreme | 288 kg (634 lb) |
| Overall length | Expedition Sport | 330.9 cm (130.3 in) |
| | Expedition LE<br>Expedition SE<br>Expedition Extreme | 325.6 cm (128.2 in) |
| Overall width | Expedition Sport | 114 cm (44.9 in) to 118 cm (46.5 in) |
| | Expedition LE<br>Expedition SE<br>Expedition Extreme | 120 cm (47.2 in) to 124 cm (48.8 in) |
| Overall height | | 151.3 cm (59.6 in) |
| Ski stance | | 97.5 cm (38.4 in) to 102 cm (40.2 in) |
| Cargo load (includes rear rack, rear storage compartment and tongue load) | Expedition Sport | 25 kg (55 lb) |
| | Expedition LE<br>Expedition SE<br>Expedition Extreme | 57 kg (125 lb) |
| Rear under seat storage compartment loading capacity | Expedition LE<br>Expedition SE<br>Expedition Extreme | 15 l (4 gal(liq.,US))<br>or<br>10 kg (22 lb) |

| WEIGHT AND DIMENSIONS | | |
|---|---|---|
| Cargo Box capacity | Expedition SE | 135 l (35.7 gal(liq.,US)) or 48 kg (105 lb) |
| Total vehicle load allowed (including occupant(s), all other loads and added accessories) | Expedition Sport | 206 kg (455 lb) |
| | Expedition LE<br>Expedition SE<br>Expedition Extreme | 238 kg (525 lb) |
| Towing capacity | Expedition Sport | 260 kg (573 lb) |
| | Expedition LE<br>Expedition SE<br>Expedition Extreme | 680 kg (1,500 lb) |
| Tongue capacity | | 16 kg (35 lb) |

(1) NOTICE Do not attempt to adjust gap on this spark plug.

(2) Refer to *Engine Oil* for detailed information.

(3) Refer to *Track Tension Verification* in *Maintenance Procedures* for detailed procedure.

# TROUBLESHOOTING

# TROUBLESHOOTING-GUIDELINES

## 1. ELECTRIC STARTER DOES NOT WORK

Emergency engine stop switch in OFF position or tether cord cap not installed on engine cut-off switch.

– *Place the emergency engine stop switch in the ON position and install tether cord cap (on engine cut-off switch.*

Throttle applied while attempting an engine start.

– *Release throttle while cranking.*

## 2. ENGINE IS CRANKED BUT FAILS TO START

No fuel to the engine.

– *Check fuel tank level, add fuel if necessary.*

System voltage too low.

– *Contact an authorized BRP snowmobile dealer.*

## 3. ENGINE RPM DOES NOT REACH CLUTCH ENGAGEMENT POINT

D.E.S.S. did not read D.E.S.S. key code in the tether cord cap.

– *Properly install tether cord cap.*

D.E.S.S. has read a different code than the one programmed.

– *Install a tether cord cap for which this snowmobile was programmed.*

ECM does not recognize the D.E.S.S. key.

– *Refer to an authorized BRP snowmobile dealer.*

## 4. ENGINE LACKS ACCELERATION OR POWER

Engine warm-up in progress.

– *Drive vehicle at low speeds for a few minutes.*

Engine break-in period not completed.

– *Complete break-in period.*

Drive and driven pulleys require servicing.

– *Contact an authorized BRP snowmobile dealer.*

Engine overheats.

– *Check coolant level, see Maintenance Procedures.*

– *Check heat exchangers cleanliness. Clean if necessary.*

Drive belt worn too thin.

– *If the drive belt has lost more than 3 mm (1/8 in) of its original width, it will affect vehicle performance.*

– *Replace drive belt.*

Incorrect track adjustment.

– *See Maintenance Procedures and/or an authorized BRP snowmobile dealer for proper alignment and tension adjustments.*

Fuel pressure too low.

– *Seek service from an authorized BRP snowmobile dealer, repair shop, or person of your own choosing for maintenance, repair, or replacement. Please refer to the US EPA EMISSION-RELATED WARRANTY contained herein for information about warranty claims.*

## 5. ENGINE BACKFIRES

Engine is running too hot.

– *See item 4 of ENGINE LACKS POWER.*

Ignition timing is incorrect or there is an ignition system failure.

– *Seek service from an authorized BRP snowmobile dealer, repair shop, or person of your own choosing for maintenance, repair, or replacement. Please refer to the US EPA EMISSION-RELATED WARRANTY contained herein for information about warranty claims.*

Exhaust system leak.

– *Seek service from an authorized BRP snowmobile dealer, repair shop, or person of your own choosing for maintenance, repair, or replacement. Please refer to the US EPA EMISSION-RELATED WARRANTY contained herein for information about warranty claims.*

Fuel pressure too low.

– *Seek service from an authorized BRP snowmobile dealer, repair shop, or person of your own choosing for maintenance, repair, or*

*replacement. Please refer to the US EPA EMISSION-RELATED WARRANTY contained herein for information about warranty claims.*

## 6. ENGINE MISFIRES

Water in fuel.

– *Drain fuel system and refill with fresh fuel.*

## 7. HEATED GRIPS/THUMB WARMERS ARE NOT WORKING

Engine RPM is too low.

– *Make sure engine RPM is above 2000.*

## 8. ENGINE HAS SHUT DOWN

The engine shuts down after long periods of idling.

– *Do not let engine idle too long. Refer to Vehicle Warm-up in Operating Instruction.*

# MONITORING SYSTEM

## Pilot Lamps, Messages and Beeper Codes

Gauge pilot lamp(s) will inform you if an anomaly occurs or to inform you of a particular condition.



*TYPICAL — PILOT LAMPS*

Pilot lamp can flash alone or in combination with another lamp.

The lower display is used as a complement of the pilot lamps to give you a brief description if an anomaly occurs or to inform you of a particular condition.

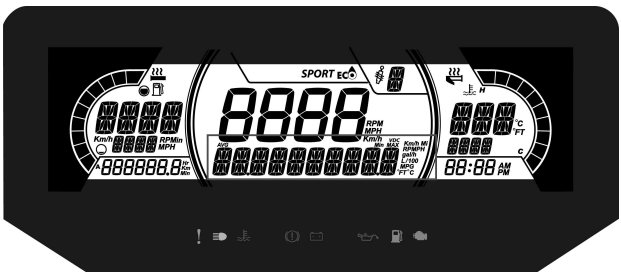


*7.2" DIGITAL LOWER DISPLAY*

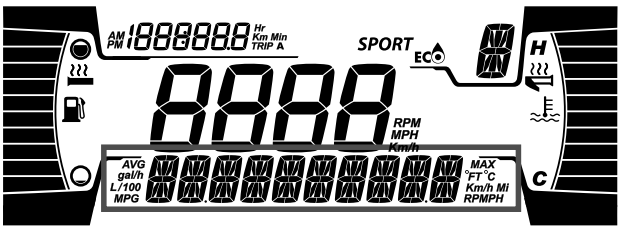


*4.5" DIGITAL LOWER DISPLAY*

Messages will be displayed with a beep code and pilot lamp(s).

Beeper codes will be heard and messages will be displayed to catch your attention.

See table below for details.

**NOTE:**
Some of the listed pilot lamps and messages do not apply to all models.

| Pilot lamp ON | Beeper | Message display | Description |
|---|---|---|---|
|  | 1 Long beep repeating | HIGH ENGINE TEMPERATURE | Engine is overheating, reduce snowmobile speed and run in loose snow or stop engine immediately and let engine cool down. Check coolant level, refer to *Maintenance*. If coolant level is correct and overheating persists, contact an authorized BRP snowmobile dealer. Do not run the engine if condition persists. |
| | | MUFFLER OVERHEAT | Reduce speed or stop engine. Let engine cool down and restart. If overheating persists, contact an authorized BRP snowmobile dealer. Do not run the engine if condition persists. |
|  | 1 Long beep repeating | HIGH ENGINE TEMPERATURE | Critical overheat. Stop engine immediately and let engine cool down. Check coolant level, refer to *Maintenance*. If coolant level is correct and overheating persists, contact an authorized BRP snowmobile dealer. Do |

| Pilot lamp ON | Beeper | Message display | Description |
|---|---|---|---|
| | | | not run the engine if condition persists. |
| | | MUFFLER OVERHEAT | Critical overheat. Stop engine immediately and let engine cool down. If overheating persists, contact an authorized BRP snowmobile dealer. Do not run the engine if condition persists. |
| | | ECM OVERHEAT | |
|  | — | BATT VOLT | Indicate a low or high battery voltage condition. See an authorized BRP snowmobile dealer as soon as possible. |
|  | 1 Long beep repeating | CHECK ENGINE | Engine fault, see an authorized BRP snowmobile dealer, repair shop or person of your own choosing as soon as possible. |
|  | — | — | Displayed when brake is applied for more than 15 seconds while throttle lever is squeezed and vehicle is moving at more than 5 km/h (3 MPH). |
| — | 4 short beeps every 5 minutes | KNOCK | Engine detonation (RPM is limited when this condition occurs). |

| Pilot lamp ON | Beeper | Message display | Description |
|---|---|---|---|
| | | | – Ensure recommended fuel is used.<br>– Check fuel quality, replace if necessary.<br>– If fault still occurs, contact an authorized BRP snowmobile dealer, repair shop, or person of your own choosing. |
| — | 4 short beeps every 5 minutes | REV LIMIT | Engine RPM limited for protection when certain faults occur. |
| — | — | OVER REV | Indicates that maximum engine RPM is reached. Check clutch calibration. |
| — | Short beeps repeating rapidly | SHUTDOWN | Shutdown procedure in force due to engine overheating or fuel pump problem. |
| DESS | — | — | Good key, vehicle ready to operate. |
| | — | WRONG KEY | Unable to read key (bad connection). Make sure the key is clean and correctly snapped on post. |

| Pilot lamp ON | Beeper | Message display | Description |
|---|---|---|---|
| | — | CHECK KEY | Invalid key or key not programmed. Use the proper key for the vehicle or have the programmed. |
|  (blinking) | — | — | Fuel level sensor problem. |

## Fault Codes

The fault codes can be displayed on the center display.

The fault codes are accessible in the setting menu.

Contact an authorized BRP snowmobile dealer for code signification.

This page is intentionally blank

# WARRANTY

# BRP LIMITED WARRANTY USA AND CANADA: 2023 SKI-DOO® SNOWMOBILES

## SCOPE OF THE LIMITED WARRANTY

Bombardier Recreational Products Inc. (**"BRP"**) warrants its 2023 Ski-Doo snowmobiles sold by authorized BRP dealers (as defined below) in the United States of America ("USA") and in Canada from defects in material or workmanship for the period and under the conditions described below. This limited warranty will become null and void if: (1) the snowmobile was used for racing or any other competitive activity, at any point, even by a previous owner; or (2) the snowmobile has been altered or modified in such a way so as to adversely affect its operation, performance or durability, or has been altered or modified to change its intended use.

Non-factory installed parts and accessories are not covered under this limited warranty. Please refer to the applicable parts and accessories limited warranty text.

## LIMITATIONS OF LIABILITY

**THIS WARRANTY IS EXPRESSLY GIVEN AND ACCEPTED IN LIEU OF ANY AND ALL OTHER WARRANTIES, EXPRESSED OR IMPLIED, INCLUDING WITHOUT LIMITATION ANY WARRANTY OF MERCHANTABILITY OR FITNESS FOR A PARTICULAR PURPOSE. TO THE EXTENT THAT THEY CANNOT BE DISCLAIMED, THE IMPLIED WARRANTIES ARE LIMITED IN DURATION TO THE LIFE OF THE EXPRESS WARRANTY. INCIDENTAL AND CONSEQUENTIAL DAMAGES ARE EXCLUDED FROM COVERAGE UNDER THIS WARRANTY. SOME STATES/PROVINCES DO NOT ALLOW FOR THE DISCLAIMERS, LIMITATIONS AND EXCLUSIONS IDENTIFIED ABOVE, AS A RESULT, THEY MAY NOT APPLY TO YOU. THIS WARRANTY GIVES YOU SPECIFIC RIGHTS, AND YOU MAY ALSO HAVE OTHER LEGAL RIGHTS WHICH MAY VARY FROM STATE TO STATE, OR PROVINCE TO PROVINCE.**

Neither the distributor, any BRP dealer nor any other person has been authorized to make any affirmation, representation or warranty regarding the product, other than those contained in this limited warranty, and if made, shall not be enforceable against BRP. BRP reserves the right to modify this limited warranty at any time, being understood that such modification will not alter the warranty conditions applicable to the products sold while this warranty is in effect.

## EXCLUSIONS – ARE NOT WARRANTED

The following are not warranted under any circumstances:

- Normal wear and tear;
- Routine maintenance items, tune ups, adjustments;

- Damage caused by failure to provide proper maintenance and/or storage, as described in the Operator's Guide;
- Damage resulting from removal of parts, improper repairs, service, maintenance, modifications or use of parts or accessories not manufactured or approved by BRP or resulting from repairs done by a person that is not an authorized servicing BRP dealer;
- Damage caused by abuse, abnormal use, neglect, use of the product on surfaces other than snow, or operation of the product in a manner inconsistent with the recommended operation described in the Operator's Guide;
- Damage resulting from accident, submersion, fire, theft, vandalism or any act of God;
- Operation with fuels, oils or lubricants which are not suitable for use with the product (see the Operator's Guide);
- Snow or water ingestion;
- Incidental or consequential damages, or damages of any kind including without limitation towing, storage, telephone, rental, taxi, inconvenience, insurance coverage, loan payments, loss of time, loss of income; and
- Damage resulting from studs installed on tracks if the installation does not conform to BRP's instructions.

## WARRANTY COVERAGE PERIOD

This limited warranty will be in effect from the date of delivery to the first retail consumer or the date the product is first put into use, whichever occurs first and for the following period:

TWELVE (12) CONSECUTIVE MONTHS, for private or commercial use owners. However, the warranty coverage period on a snowmobile delivered between June 1st and December 1st of a given year will expire November 30th of the following year.

For emission-related components; please also refer to the *US EPA EMISSION-RELATED WARRANTY (PAGE 388) US EPA EMISSION-RELATED WARRANTY* contained herein.

The repair or replacement of parts or the performance of service under this warranty does not extend the life of this warranty beyond its original expiration date.

## CONDITIONS REQUIRED FOR WARRANTY COVERAGE

This warranty coverage is available **only** if each of the following conditions has been fulfilled:

- The 2023 Ski-Doo snowmobile must be purchased as new and unused by its first owner from a BRP dealer authorized to distribute

Ski-Doo snowmobiles in the country in which the sale occurred (**"BRP dealer"**);
- The BRP specified pre-delivery inspection process must be completed and documented and signed by the purchaser;
- The 2023 Ski-Doo snowmobile must have undergone proper registration by an authorized BRP dealer;
- The 2023 Ski-Doo snowmobile must be purchased in the country in which the purchaser resides; and
- Routine maintenance outlined in the Operator's Guide must be timely performed in order to maintain warranty coverage. BRP reserves the right to make warranty coverage contingent upon proof of proper maintenance.

BRP will not honor this limited warranty to any private use owner or commercial use owner if one of the preceding conditions has not been met. Such limitations are necessary in order to allow BRP to preserve both the safety of its products, and also that of its consumers and the general public.

## WHAT TO DO TO OBTAIN WARRANTY COVERAGE

The customer must cease using the snowmobile upon the appearance of an anomaly. The customer must notify a servicing BRP dealer within three (3) days of the appearance of a defect, and provide it with reasonable access to the product and reasonable opportunity to repair it. The customer must also present to the authorized BRP dealer, proof of purchase of the product and must sign the repair/work order prior to starting the repair in order to validate the warranty repair. All parts replaced under this limited warranty become the property of BRP.

## WHAT BRP WILL DO

BRP's obligations under this warranty are limited to, at its sole discretion, repairing parts found defective under normal use, maintenance and service, or replacing such parts with new genuine Ski-Doo parts without charge for parts and labor , at any authorized BRP dealer during the warranty coverage period under the conditions described herein. No claim of breach of warranty shall be cause for cancellation or rescission of the sale of the snowmobile to the owner.

In the event that service is required outside of the country of original sale, the owner will bear responsibility for any additional charges due to local practices and conditions, such as, but not limited to, freight, insurance, taxes, license fees, import duties, and any and all other financial charges, including those levied by governments, states, territories and their respective agencies.

BRP reserves the right to improve or modify products from time to time without assuming any obligation to modify products previously manufactured.

## TRANSFER

If the ownership of a product is transferred during the warranty coverage period, this limited warranty, subject to its terms and conditions, shall also be transferred and be valid for the remaining coverage period provided BRP or an authorized Ski-Doo Distributor/Dealer receives a proof that the former owner agreed to the transfer of ownership, in addition to the co-ordinates of the new owner.

## CONSUMER ASSISTANCE

In the event of a controversy or a dispute in connection with this limited warranty, BRP suggests that you try to resolve the issue at the dealership level. We recommend discussing the issue with the authorized dealer's service manager or owner.

If the matter still remains unresolved, contact BRP by filling out the customer contact form at www.brp.com or contact BRP by mail at one of the addresses listed under the *CONTACT US* section of this guide.

# US EPA EMISSION-RELATED WARRANTY

Bombardier Recreational Products Inc. (“BRP”) warrants to the ultimate purchaser and each subsequent purchaser that this new engine, including all parts of its exhaust emission-control system and its evaporative emission-control system, meets two conditions:

1. It is designed, built, and equipped so it conforms at the time of sale to the ultimate purchaser with the requirements of 40 CFR 1051 and 40 CFR 1060.
2. It is free from defects in materials and workmanship that may keep it from meeting the requirements of 40 CFR 1051 and 40 CFR 1060.

Where a warrantable condition exists, BRP will repair or replace, as it elects, any part or component with a defect in materials or workmanship that would increase the engine’s emissions of any regulated pollutant within the stated warranty period at no cost to the owner, including expenses related to diagnosing and repairing or replacing emission-related parts. All defective parts replaced under this warranty become the property of BRP.

For all emission-related warranty claims, BRP is limiting the diagnosis and repair of emission-related parts to the authorized Ski-Doo dealers, unless for emergency repairs as required by item 2 of the following list.

As a certifying manufacturer, BRP will not deny emission-related warranty claims based on any of the following:

1. Maintenance or other service BRP or BRP's authorized facilities performed.
2. Engine/equipment repair work that an operator performed to correct an unsafe, emergency condition attributable to BRP as long as the operator tries to restore the engine/equipment to its proper configuration as soon as possible.
3. Any action or inaction by the operator unrelated to the warranty claim.
4. Maintenance that was performed more frequently than BRP specify.
5. Anything that is BRP fault or responsibility.
6. The use of any fuel that is commonly available where the equipment operates unless BRP written maintenance instructions state that this fuel would harm the equipment’s emission control system and operators can readily find the proper fuel. See maintenance information section and fuel requirements of fueling section.

## Emission-Related Warranty Period

The emission-related warranty is valid for the following period whichever comes first:

| | hours | months | Kilo meters |
|---|---|---|---|
| Exhaust emission-related components | 200 | 30 | 4000 |
| Evaporative emission-related components | N/A | 24 | N/A |

## Components Covered

The emission-related warranty covers all components whose failure would increase an engine's emissions of any regulated pollutant, including the following listed components:

1. For exhaust emissions, emission-related components include any engine parts related to the following systems:
   - Air-induction system
   - Fuel system
   - Ignition system
   - Exhaust gas recirculation systems
2. The following parts are also considered emission-related components for exhaust emissions:
   - Aftertreatment devices
   - Crankcase ventilation valves
   - Sensors
   - Electronic control units
3. The following parts are considered emission-related components for evaporative emissions:
   - Fuel tank
   - Fuel cap
   - Fuel line
   - Fuel line fittings
   - Clamps*
   - Pressure relief valves*
   - Control valves*
   - Control solenoids*
   - Electronic controls*
   - Vacuum control diaphragms*
   - Control cables*
   - Control linkages*
   - Purge valves
   - Vapor hoses
   - Liquid/vapor separator
   - Carbon canister
   - Canister mounting brackets

– Carburetor purge port connector

**NOTE:**
*As related to the evaporative emission control system

4. Emission-related components also include any other part whose only purpose is to reduce emissions or whose failure will increase emissions without significantly degrading engine/equipment performance.

## Limited Applicability

As a certifying manufacturer, BRP may deny emission-related warranty claims for failures that have been caused by the owner's or operator's improper maintenance or use, by accidents for which the manufacturer has no responsibility, or by acts of God. For example, an emission-related warranty claim need not be honored for failures that have been directly caused by the operator's abuse of the engine/equipment or the operator's use of the engine/equipment in a manner for which it was not designed and are not attributable to the manufacturer in anyway.

If you have any question regarding your warranty rights and responsibility or for the name and location of the nearest authorized BRP dealer, you should contact BRP by filling out the customer contact form at **www.brp.com** or contact BRP by mail at one of the addresses listed under the CONTACT US section of this guide, or call at 1-888-272-9222.

# BRP INTERNATIONAL LIMITED WARRANTY: 2023 SKI-DOO® SNOWMOBILES

## SCOPE OF THE LIMITED WARRANTY

**Bombardier Recreational Products Inc. ("BRP")** warrants its 2023 Ski-Doo snowmobiles sold by distributors or dealers authorized by BRP to distribute SKI-Doo snowmobiles (**"Ski-Doo Distributor/Dealer"**) outside of the fifty United States, Canada, members of the European Economic Area (which is comprised of the member states of the European Union plus the United Kingdom, Norway, Iceland and Liechtenstein) (**"EEA"**), members states of the Commonwealth of the Independent States (including Ukraine and Turkmenistan) (**"CIS"**) and Turkey, from defects in material or workmanship for the period and under the conditions described below.

Non-factory installed parts and accessories are not covered under this limited warranty. Please refer to the applicable parts and accessories limited warranty text.

This limited warranty will become null and void if: (1) the snowmobile was used for racing or any other competitive activity, at any point, even by a previous owner; or (2) the snowmobile has been altered or modified in such a way so as to adversely affect its operation, performance or durability, or has been altered or modified to change its intended use.

## LIMITATIONS OF LIABILITY

**TO THE EXTENT PERMITTED BY LAW, THIS WARRANTY IS EXPRESSLY GIVEN AND ACCEPTED IN LIEU OF ANY AND ALL OTHER WARRANTIES, EXPRESSED OR IMPLIED, INCLUDING WITHOUT LIMITATION ANY WARRANTY OF MERCHANTABILITY OR FITNESS FOR A PARTICULAR PURPOSE. TO THE EXTENT THAT THEY CANNOT BE DISCLAIMED, THE IMPLIED WARRANTIES ARE LIMITED IN DURATION TO THE LIFE OF THE EXPRESS WARRANTY. INCIDENTAL AND CONSEQUENTIAL DAMAGES ARE EXCLUDED FROM COVERAGE UNDER THIS WARRANTY. SOME JURISDICTIONS DO NOT ALLOW FOR THE DISCLAIMERS, LIMITATIONS AND EXCLUSIONS IDENTIFIED ABOVE, AS A RESULT, THEY MAY NOT APPLY TO YOU. THIS WARRANTY GIVES YOU SPECIFIC RIGHTS, AND YOU MAY ALSO HAVE OTHER LEGAL RIGHTS WHICH MAY VARY FROM COUNTRY TO COUNTRY. (FOR PRODUCTS PURCHASED IN AUSTRALIA REFER TO "FOR PRODUCTS SOLD IN AUSTRALIA ONLY", BELOW).**

Neither the Ski-Doo Distributor/Dealer nor any other person has been authorized to make any affirmation, representation or warranty regarding the product, other than those contained in this limited warranty, and if made, shall not be enforceable against BRP.

BRP reserves the right to modify this warranty at any time, being understood that such modification will not alter the warranty conditions applicable to the products sold while this warranty is in effect.

## EXCLUSIONS – ARE NOT WARRANTED

The following are not warranted under this limited warranty under any circumstances:

- Normal wear and tear;
- Routine maintenance items, tune ups, adjustments;
- Damage caused by negligence or failure to provide proper maintenance and/or storage, as described in the operator's guide;
- Damage resulting from removal of parts, improper repairs, service, maintenance, modifications or use of parts or accessories not manufactured or approved by BRP which in its reasonable judgement are either incompatible with the product or adversely affect its operation, performance and durability, or resulting from repairs done by a person that is not an authorized servicing BRP snowmobile distributor/ dealer;
- Damage caused by abuse, abnormal use, neglect, racing or operation of the product on surfaces other than snow, or operation of the product in a manner inconsistent with the recommended operation described in the Operator's Guide;
- Damage resulting from accident, submersion, fire, snow or water ingestion, theft, vandalism or any act of God;
- Operation with fuels, oils or lubricants which are not suitable for use with the product (see the Operator's Guide);
- Damage resulting from rust, corrosion or exposure to the elements;
- Incidental or consequential damages, or damages of any kind including without limitation towing, storage, transportation expenses, telephone, rental, taxi, inconvenience, insurance coverage, loan payments, loss of time, loss of income; or time missed for downtime experience due to service work.
- And damage resulting from studs installed on tracks if the installation does not conform to BRP's instructions.

## WARRANTY COVERAGE PERIOD

This warranty will be in effect from (1) the date of delivery to the first retail consumer or (2) the date the product is first put into use, whichever occurs first and for a period of:

TWELVE (12) CONSECUTIVE MONTHS, for private or commercial use owners. However, the warranty coverage period on a snowmobile delivered between June 1st and December 1st of a given year will expire November 30th of the following year.

The repair or replacement of parts or the performance of service under this warranty does not extend the life of this warranty beyond its original expiration date.

Note that the duration and any other modalities of the warranty coverage are subject to the applicable national or local legislation in the customer's country.

***FOR PRODUCTS SOLD IN AUSTRALIA ONLY***

Nothing in these Warranty terms and conditions should be taken to exclude, restrict or modify the application of any condition, warranty, guarantee, right or remedy conferred or implied under the Competition and Consumer Act 2010 (Cth), including the Australian Consumer Law or any other law, where to do so would contravene that law, or cause any part of these terms and conditions to be void. The benefits given to you under this limited warranty are in addition to other rights and remedies that you have under Australian law.

Our goods come with guarantees that cannot be excluded under the Australian Consumer Law. You are entitled to a replacement or refund for a major failure and for compensation for any other reasonably foreseeable loss or damage. You are also entitled to have the goods repaired or replaced if the goods fail to be of acceptable quality and the failure does not amount to a major failure.

## CONDITIONS TO HAVE WARRANTY COVERAGE

This warranty coverage is available **only** if each of the following conditions has been fulfilled:

- The 2023 Ski-Doo snowmobile must be purchased as new and unused by its first owner from a Ski-Doo Distributor/Dealer authorized to distribute Ski-Doo snowmobiles in the country in which the sale occurred;
- The BRP specified pre-delivery inspection process must be completed and documented;
- The product must have undergone proper registration by an authorized Ski-Doo Distributor/Dealer;
- The 2023 Ski-Doo snowmobile must be purchased in the country or union of countries in which the purchaser resides.
- Routine maintenance outlined in the Operator’s Guide must be timely performed in order to maintain warranty coverage. BRP reserves the right to make warranty coverage contingent upon proof of proper maintenance.

BRP will not honour this limited warranty to any private use owner or commercial use owner if one of the preceding conditions has not been met. Such limitations are necessary in order to allow BRP to preserve both the safety of its products, and also that of its consumers and the general public.

## WHAT TO DO TO OBTAIN WARRANTY COVERAGE

The customer must cease using the snowmobile upon the appearance of an anomaly. The customer must notify a servicing BRP snowmobile distributor/ dealer within two (2) months of the appearance of a defect, and provide it with reasonable access to the product and reasonable opportunity to repair it. The customer must also present to the authorized BRP snowmobile distributor/ dealer, proof of purchase of the product and must sign the repair/work order prior to starting the repair in order to validate the warranty repair. All parts replaced under this limited warranty become the property of BRP.

Note that the notification period is subject to the applicable national or local legislation in customer's country.

## WHAT BRP WILL DO

To the extent permitted by law, BRP's obligations under this warranty are limited to, at its sole discretion, repairing parts found defective under normal use, maintenance and service, or replacing such parts with new genuine Ski-Doo parts without charge for parts and labour, at any authorized Ski-Doo Distributor/Dealer during the warranty coverage period under the conditions described herein. BRP's responsibility is limited to making the required repairs or replacements of parts. No claim of breach of warranty shall be cause for cancellation or rescission of the sale of the snowmobile to the owner. You may have other legal rights which may vary from country to country.

In the event that service is required outside of the country of original sale, the owner will bear responsibility for any additional charges due to local practices and conditions, such as, but not limited to, freight, insurance, taxes, license fees, import duties, and any and all other financial charges, including those levied by governments, states, territories and their respective agencies.

BRP reserves the right to improve or modify products from time to time without assuming any obligation to modify products previously manufactured.

## TRANSFER

If the ownership of a product is transferred during the warranty coverage period, this limited warranty, subject to its terms and conditions, shall also be transferred and be valid for the remaining coverage period provided BRP or an authorized Ski-Doo Distributor/Dealer receives a proof that the former owner agreed to the transfer of ownership, in addition to the co-ordinates of the new owner.

## CONSUMER ASSISTANCE

In the event of a controversy or a dispute in connection with this limited warranty, BRP suggests that you try to resolve the issue at the Ski--Doo Distributor/Dealer level. We recommend discussing the issue with the authorized Ski-Doo Distributor/Dealer's service manager or owner.

If the matter still remains unresolved, contact BRP by filling out the customer contact form at www.brp.com or contact BRP by mail at one of the addresses listed under the *CONTACT US* section of this guide.

# BRP LIMITED WARRANTY FOR THE EUROPEAN ECONOMIC AND THE COMMONWEALTH OF THE INDEPENDENT STATES (CIS) AREAS AND TURKEY: 2023 SKI-DOO® SNOWMOBILES

## SCOPE OF THE LIMITED WARRANTY

Bombardier Recreational Products Inc. (**"BRP"**) warrants its 2023 Ski-Doo snowmobiles sold by distributors or dealers authorized by BRP to distribute Ski-Doo snowmobiles (**"Ski-Doo Distributor/Dealer"**) in member states of the European Economic Area (which is comprised of the member states of the European Union plus the United Kingdom, Norway, Iceland and Liechtenstein) (**"EEA"**), in member states of the Commonwealth of the Independent States (including Ukraine and Turkmenistan) (**"CIS"**) and Turkey from defects in material or workmanship for the period and under the conditions described below.

Non-factory installed parts and accessories are not covered under this limited warranty. Please refer to the applicable parts and accessories limited warranty text.

This limited warranty will become null and void if: (1) the snowmobile was used for racing or any other competitive activity, at any point, even by a previous owner; or (2) the snowmobile has been altered or modified in such a way so as to adversely affect its operation, performance or durability, or has been altered or modified to change its intended use.

## LIMITATIONS OF LIABILITY

**TO THE EXTENT PERMITTED BY LAW, THIS WARRANTY IS EXPRESSLY GIVEN AND ACCEPTED IN LIEU OF ANY AND ALL OTHER WARRANTIES, EXPRESSED OR IMPLIED, INCLUDING WITHOUT LIMITATION ANY WARRANTY OF MERCHANTABILITY OR FITNESS FOR A PARTICULAR PURPOSE. TO THE EXTENT THAT THEY CANNOT BE DISCLAIMED, THE IMPLIED WARRANTIES ARE LIMITED IN DURATION TO THE LIFE OF THE EXPRESS WARRANTIES. INCIDENTAL AND CONSEQUENTIAL DAMAGES ARE EXCLUDED FROM COVERAGE UNDER THIS WARRANTY. SOME JURISDICTIONS DO NOT ALLOW FOR THE DISCLAIMERS, LIMITATIONS AND EXCLUSIONS IDENTIFIED ABOVE, AS A RESULT, THEY MAY NOT APPLY TO YOU. THIS WARRANTY GIVES YOU SPECIFIC RIGHTS, AND YOU MAY ALSO HAVE OTHER LEGAL RIGHTS WHICH MAY VARY FROM COUNTRY TO COUNTRY.**

Neither the Ski-Doo Distributor/Dealer nor any other person has been authorized to make any affirmation, representation or warranty

regarding the product, other than those contained in this limited warranty, and if made, shall not be enforceable against BRP.

BRP reserves the right to modify this warranty at any time, being understood that such modification will not alter the warranty conditions applicable to the products sold while this warranty is in effect.

## EXCLUSIONS – ARE NOT WARRANTED

The following are not warranted under this limited warranty under any circumstances:

- Normal wear and tear;
- Routine maintenance items, tune ups, adjustments;
- Damage caused by negligence or failure to provide proper maintenance and/or storage, as described in the operator's guide;
- Damage resulting from removal of parts, improper repairs, service, maintenance, modifications or use of parts or accessories not manufactured or approved by BRP which in its reasonable judgement are either incompatible with the product or adversely affect its operation, performance and durability, or resulting from repairs done by a person that is not an authorized servicing BRP snowmobile distributor/ dealer;
- Damage caused by abuse, abnormal use, neglect, racing or operation of the product on surfaces other than snow, or operation of the product in a manner inconsistent with the recommended operation described in the Operator’s Guide;
- Damage resulting from accident, submersion, fire, snow or water ingestion, theft, vandalism or any act of God;
- Operation with fuels, oils or lubricants which are not suitable for use with the product (see the Operator’s Guide);
- Damage resulting from rust, corrosion or exposure to the elements;
- Incidental or consequential damages, or damages of any kind including without limitation towing, storage, transportation expenses, telephone, rental, taxi, inconvenience, insurance coverage, loan payments, loss of time, loss of income; or time missed for downtime experience due to service work.
- And damage resulting from studs installed on tracks if the installation does not conform to BRP’s instructions.

## WARRANTY COVERAGE PERIOD

This warranty will be in effect from (1) the date of delivery to the first retail consumer or (2) the date the product is first put into use, whichever occurs first and for a period of:

TWENTY-FOUR (24) CONSECUTIVE MONTHS, for private use owners and TWELVE (12) CONSECUTIVE MONTHS for commercial use owners. However, the warranty coverage period on a snowmobile

delivered between June 1st and December 1st of a given year will expire November 30th of the applicable year. A snowmobile is used commercially when it is used in connection with generating income or any work or employment during any part of the warranty period. A snowmobile is also used commercially when, at any point during the warranty period, it has commercial tags or is licensed for commercial use.

The repair or replacement of parts or the performance of service under this warranty does not extend the life of this warranty beyond its original expiration date.

Note that the duration and any other modalities of the warranty coverage are subject to the applicable national or local legislation in the customer's country.

## CONDITIONS TO HAVE WARRANTY COVERAGE

This warranty coverage is available **only** if each of the following conditions has been fulfilled:

- The 2023 Ski-Doo snowmobile must be purchased as new and unused by its first owner from a Ski-Doo Distributor/Dealer authorized to distribute Ski-Doo products in the country in which the sale occurred;
- The BRP specified pre-delivery inspection process must be completed and documented;
- The product must have undergone proper registration by an authorized Ski-Doo Distributor/Dealer;
- The 2023 Ski-Doo snowmobile must be purchased within the EEA by an EEA resident, in the CIS for residents of the countries comprised in such area and in Turkey for residents of Turkey; and
- Routine maintenance outlined in the Operator's Guide must be timely performed in order to maintain warranty coverage. BRP reserves the right to make warranty coverage contingent upon proof of proper maintenance.

BRP will not honour this limited warranty to any private use owner or commercial use owner if one of the preceding conditions has not been met. Such limitations are necessary in order to allow BRP to preserve both the safety of its products, and also that of its consumers and the general public.

## WHAT TO DO TO OBTAIN WARRANTY COVERAGE

The customer must cease using the snowmobile upon the appearance of an anomaly. The customer must notify a servicing BRP snowmobile distributor/ dealer within two (2) months of the appearance of a defect, and provide it with reasonable access to the product and reasonable opportunity to repair it. The customer must also present to the

authorized BRP snowmobile distributor/ dealer, proof of purchase of the product and must sign the repair/work order prior to starting the repair in order to validate the warranty repair. All parts replaced under this limited warranty become the property of BRP.

Note that the notification period is subject to the applicable national or local legislation in customer's country.

## WHAT BRP WILL DO

To the extent permitted by law, BRP's obligations under this warranty are limited to, at its sole discretion, repairing parts found defective under normal use, maintenance and service, or replacing such parts with new genuine Ski-Doo parts without charge for parts and labour, at any authorized Ski-Doo Distributor/Dealer during the warranty coverage period under the conditions described herein. BRP's responsibility is limited to making the required repairs or replacements of parts. No claim of breach of warranty shall be cause for cancellation or rescission of the sale of the snowmobile to the owner. You may have other legal rights which may vary from country to country.

In the event that service is required outside of the EEA, CIS or Turkey, the owner will bear responsibility for any additional charges due to local practices and conditions, such as, but not limited to, freight, insurance, taxes, license fees, import duties, and any and all other financial charges, including those levied by governments, states, territories and their respective agencies.

BRP reserves the right to improve or modify products from time to time without assuming any obligation to modify products previously manufactured.

## TRANSFER

If the ownership of a product is transferred during the warranty coverage period, this limited warranty, subject to its terms and conditions, shall also be transferred and be valid for the remaining coverage period provided BRP or an authorized Ski-Doo Distributor/Dealer receives a proof that the former owner agreed to the transfer of ownership, in addition to the co-ordinates of the new owner.

## CONSUMER ASSISTANCE

In the event of a controversy or a dispute in connection with this limited warranty, BRP suggests that you try to resolve the issue at the Ski--Doo Distributor/Dealer level. We recommend discussing the issue with the authorized Ski-Doo Distributor/Dealer's service manager or owner.

If the matter still remains unresolved, contact BRP by filling out the customer contact form at www.brp.com or contact BRP by mail at one of the addresses listed under the *CONTACT US* section of this guide.

## ADDITIONAL TERMS AND CONDITIONS FOR FRANCE ONLY

The following terms and conditions are applicable to products sold in France only:

The seller shall deliver goods that are complying with the contract and shall be responsible for defects existing upon delivery. The seller shall also be responsible for defects resulting from packaging, assembling instructions or the installation when it is its responsibility per the contract or if accomplished under its responsibility. To be compliant with the contract, the good shall:

1. Be fit for normal use for goods similar thereto and, if applicable:
   - Correspond to the description provided by the seller and have the qualities presented to the buyer though sample or model;
   - Have the qualities that a buyer may legitimately expect considering the public declarations of the seller, the manufacturer of its representative, including in advertising or labeling; or
2. Have the characteristics mutually agreed upon as between the parties or be fit for the specific use intended by the buyer and brought to the attention of the seller and which accepted

The action for failure to comply is prescribed after two years after delivery of the goods. The seller is responsible for the warranty for hidden defects of the good sold if such hidden defects are rendering the good unfit for the intended use, or if they diminish its use in such a way that the buyer would not have acquired the good or would have given a lesser price, had he known. The action for such hidden defects shall be taken by the buyer within 2 years of the discovery of the defect.

# CUSTOMER INFORMATION

# DATA PRIVACY INFORMATION

Bombardier Recreational Products inc., its affiliates and subsidiaries (“BRP”) is committed to protecting your privacy and support a general policy of openness about how we collect, use and disclose your personal information in the course of managing our relationship with you. **More details can be found by visiting BRP’s Privacy Policy at: https://brp. com/en/privacy-policy. html or by scanning the QR Code below.**

Please be assured that we have appropriate security measures in place to ensure that your personal information is protected against loss and unauthorized access.

Your personal information that may be collected by BRP, directly from you or from authorized dealers or authorized third parties, includes:

- **Contact, Demographic & Registration Information** (e.g., name, full address, phone number, email, gender, ownership history, language of communication)
- **Vehicle Information** (e.g., serial number, purchase and delivery date, unit usage, vehicle location and movements)
- **Third Party Information** (e.g., information received from BRP partners, joint-marketing activities information, social media)
- **Technological Information** (e.g., IP address, type of device, operating system, browser type, webpages you view, cookies and similar technologies when you use BRP or dealers’ websites or mobile application)
- **Interaction with BRP Information** (e.g., information collected when you call BRP’s in-house sales representatives, buy items on a BRP web Site, sign up for BRP emails, participate in BRP-sponsored contests and sweepstakes or attend BRP-sponsored events)
- **Transactional Information** (e.g., information necessary to handle returns, payment information when you purchase our products or services through our websites or mobile applications and other issues related to your purchase of BRP products)

This information may be used and processed for the following purposes:

- Safety & Security
- Customer Support for Sales & After Sales (e.g., complete or follow up with you about your purchase or maintenance)
- Registration & Warranty
- Communication (e.g., sending you a BRP satisfaction survey)
- Online Behavioural Advertising, Profiling and Location-Based Services
  (e.g., offer customized experience)
- Compliance & Dispute Resolution
- Marketing & Advertising
- Assistance (e.g., help with any delivery issues, handle returns, and other issues related to your purchase of BRP products).

We also may use personal information to generate aggregated or statistical data that no longer identifies you personally.

**Your personal information may be disclosed to the following: BRP, BRP's authorized dealerships, distributors, service providers, advertising & market research partners and other authorized third parties.**

We may receive information about you from diverse sources, including third parties, such as BRP's authorized dealerships and partners, with whom we offer services or engage in joint-marketing activities. We may also receive information about you from social media platforms such as Facebook and Twitter, when you interact with us on those platforms.

Depending on the circumstances, your personal information may be communicated outside the region where you reside. Your personal information is retained only for as long as necessary for the purpose for which we obtained it and according to our retention policies.

To exercise your data privacy rights (e.g. right of access, right of rectification), to withdraw your consent in order to be removed from the address list for marketing purposes or for the satisfaction survey or for general data privacy questions, please contact BRP's Data Protection Officer at or by mail at **privacyofficer@brp.com** or by mail at:
BRP Legal Service, 726 St-Joseph, Valcourt, Quebec, Canada, J0E 2L0.

**When BRP processes your personal information, they do so in compliance with its Privacy Policy available at: https://www.brp.com/en/privacy-policy.html or by using the following QR Code.**

# CHANGE OF ADDRESS/OWNERSHIP

If your address has changed or if you are the new owner of the snowmobile, be sure to notify BRP by either:

In case of change of ownership, please join a proof that the former owner agreed to the transfer.

Notifying BRP, even after the expiration of the limited warranty, is very important as it enables BRP to reach the snowmobile owner if necessary, like when safety recalls are initiated. It is the owner's responsibility to notify BRP.

**STOLEN UNITS:** If your personal snowmobile is stolen, you should notify BRP or an authorized BRP snowmobile dealer. We will ask you to provide your name, address, phone number, the vehicle identification number and the date it was stolen.

This page is
intentionally blank

CHANGE OF ADDRESS ❑ CHANGE OF OWNERSHIP ❑

VEHICLE IDENTIFICATION NUMBER

Model Number | Vehicle Identification Number (V.I.N.)

OLD ADDRESS OR PREVIOUS OWNER:

NAME

NO. STREET APT

CITY STATE/PROVINCE ZIP/POSTAL CODE

COUNTRY TELEPHONE

NEW ADDRESS OR NEW OWNER:

NAME

NO. STREET APT

CITY STATE/PROVINCE ZIP/POSTAL CODE

COUNTRY TELEPHONE

E-MAIL ADDRESS

This page is
intentionally blank

CHANGE OF ADDRESS ❑ CHANGE OF OWNERSHIP ❑

VEHICLE IDENTIFICATION NUMBER

Model Number | Vehicle Identification Number (V.I.N.)

OLD ADDRESS OR PREVIOUS OWNER:

NAME

NO. STREET APT

CITY STATE/PROVINCE ZIP/POSTAL CODE

COUNTRY TELEPHONE

NEW ADDRESS OR NEW OWNER:

NAME

NO. STREET APT

CITY STATE/PROVINCE ZIP/POSTAL CODE

COUNTRY TELEPHONE

E-MAIL ADDRESS

This page is
intentionally blank

CHANGE OF ADDRESS ❑ CHANGE OF OWNERSHIP ❑

VEHICLE IDENTIFICATION NUMBER

Model Number | Vehicle Identification Number (V.I.N.)

OLD ADDRESS OR PREVIOUS OWNER:

NAME

NO. STREET APT

CITY STATE/PROVINCE ZIP/POSTAL CODE

COUNTRY TELEPHONE

NEW ADDRESS OR NEW OWNER:

NAME

NO. STREET APT

CITY STATE/PROVINCE ZIP/POSTAL CODE

COUNTRY TELEPHONE

E-MAIL ADDRESS

This page is
intentionally blank

# NOTES

# NOTES

# NOTES

# NOTES

# NOTES

# NOTES

# NOTES

# NOTES

# NOTES

Model No. _____

**VEHICLE**
IDENTIFICATION NUMBER (V.I.N.) _____

**ENGINE**
IDENTIFICATION NUMBER (E.I.N.) _____

**Owner:** _____
NAME

_____
No. STREET APT

_____
CITY STATE/PROVINCE ZIP/POSTAL CODE

**Purchase Date** _____ | _____ | _____ | _____ | _____
YEAR MONTH DAY

**Warranty Expiry Date** _____ | _____ | _____ | _____ | _____
YEAR MONTH DAY

To be completed by the dealer at the time of the sale.

DEALER IMPRINT AREA

**⚠ WARNING**

**Disregarding any of the safety precautions and instructions contained in the Operators's Guide, SAFETY VIDEO and on product safety labels could cause injury including the possibility of death.**

www.brp.com

520002954