2021 *Main Harness*

All 600EFI models

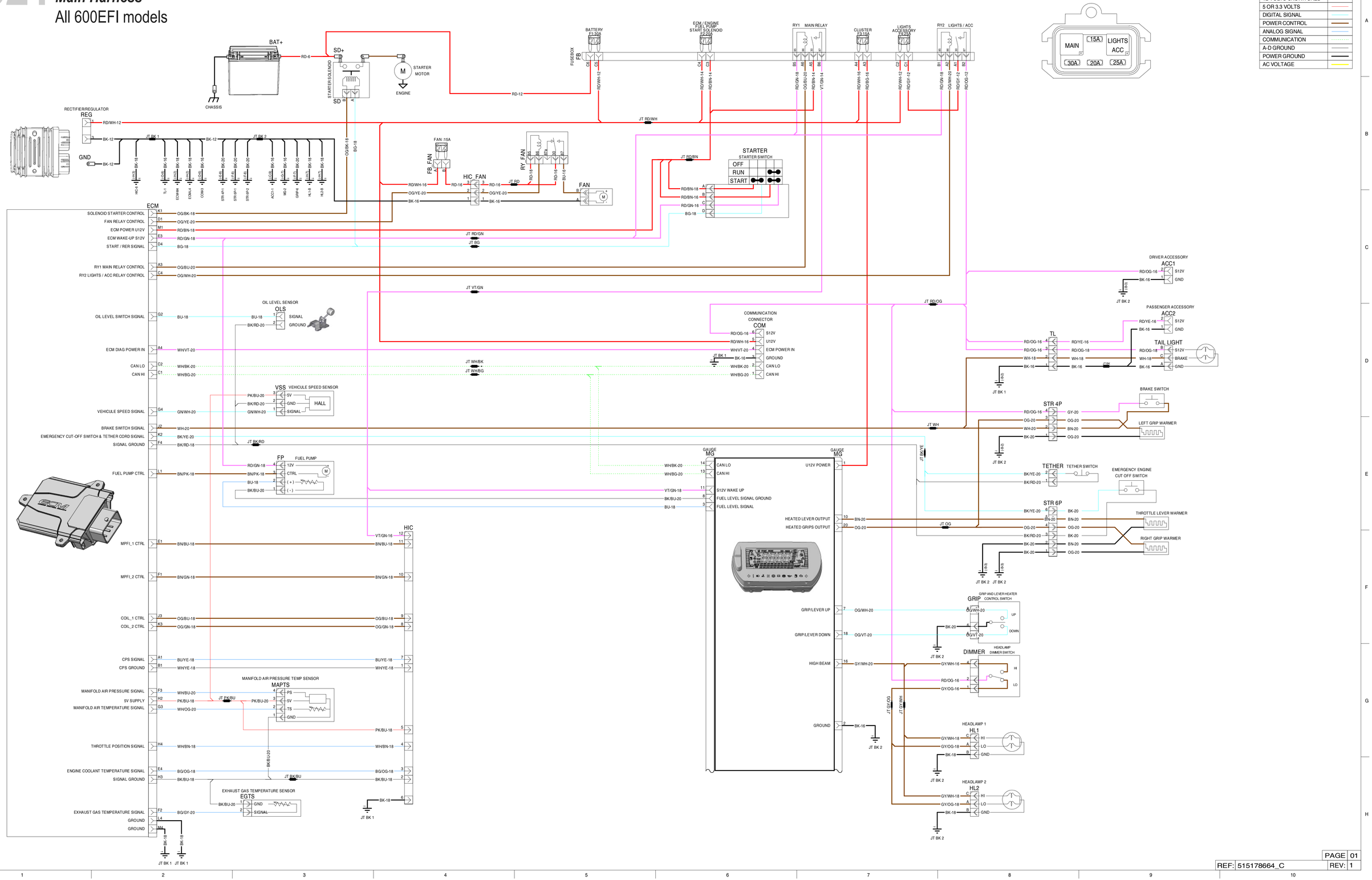

2021 *Main Harness*

600RS models

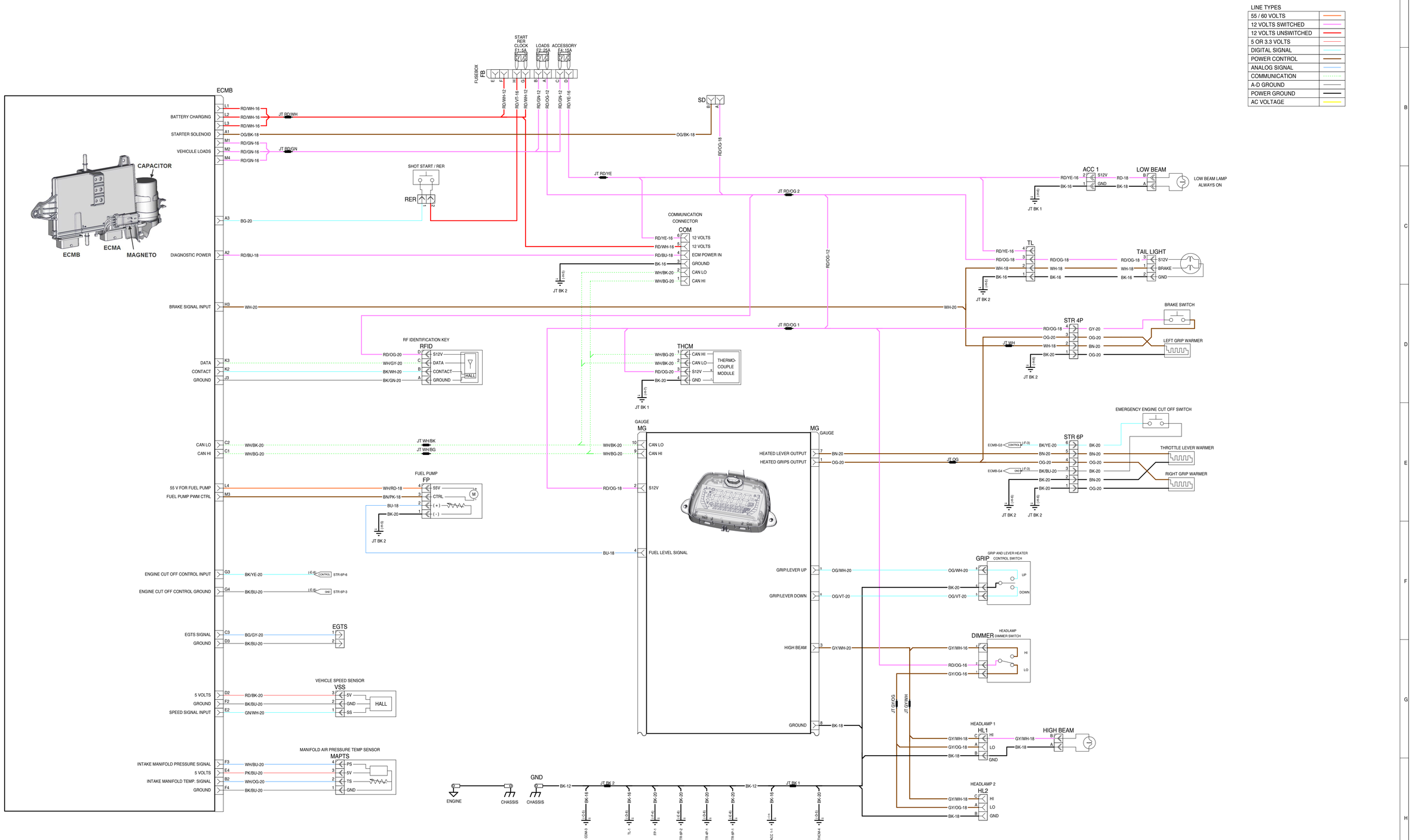

2021 *Main Harness*

Expedition Sport 600ACE and 900ACE) Grand Touring Sport (600ACE and 900ACE) Renegade Sport (600ACE)
Renegade Adrenaline (900ACE and 900ACE Turbo) Tundra LT (600ACE)

(WITH COOLING FAN (Tundra LT and Expedition Sport)

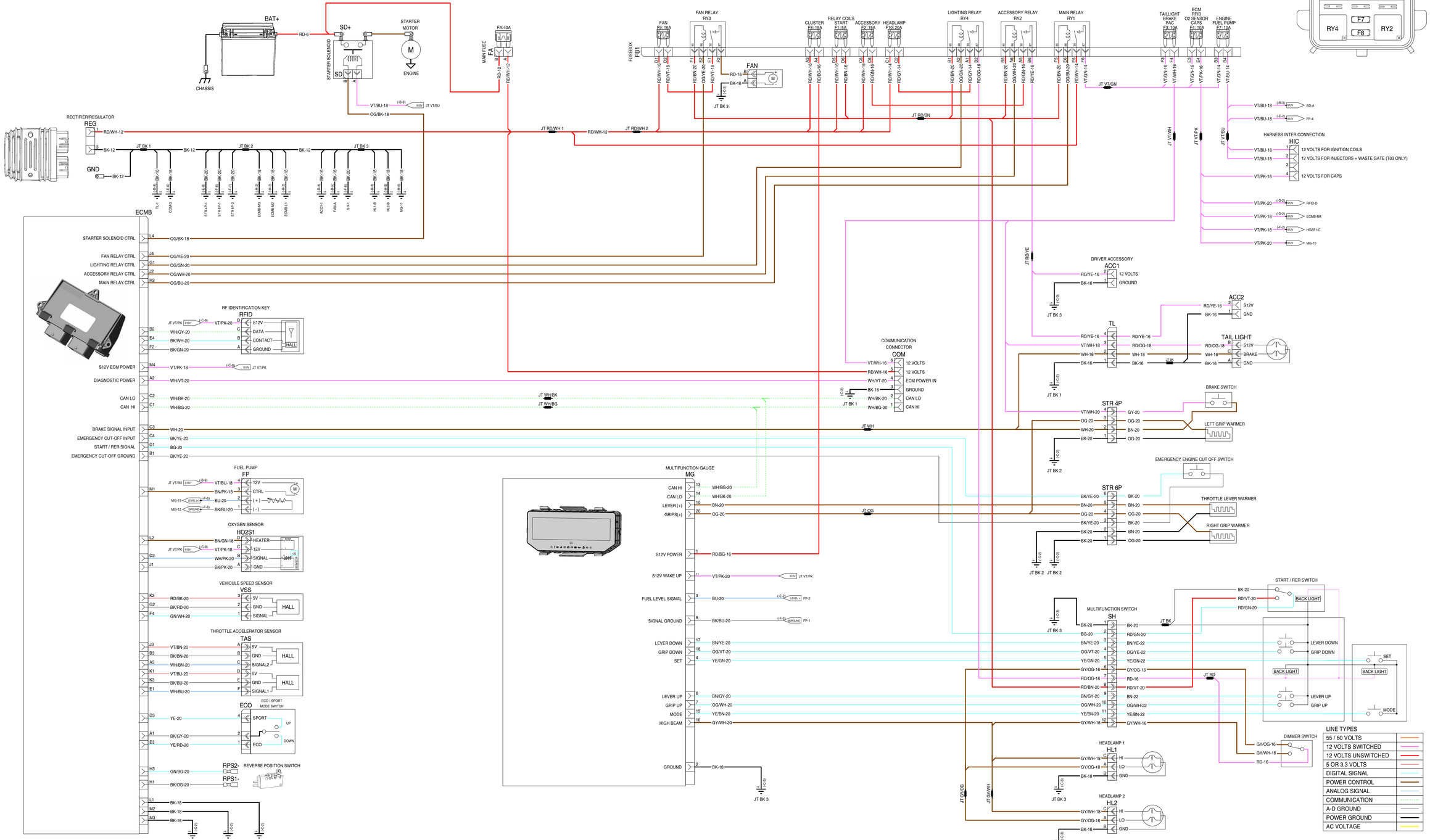

PAGE 01

REF: 515178732 REV: 1

2021 *Main Harness*

Expedition LE (900ACE and 900ACE Turbo) Expedition SE (600ACE)
Expedition SWT (900ACE and 900ACETurbo)
Skandic WT / SWT (600ACE and 900ACE)

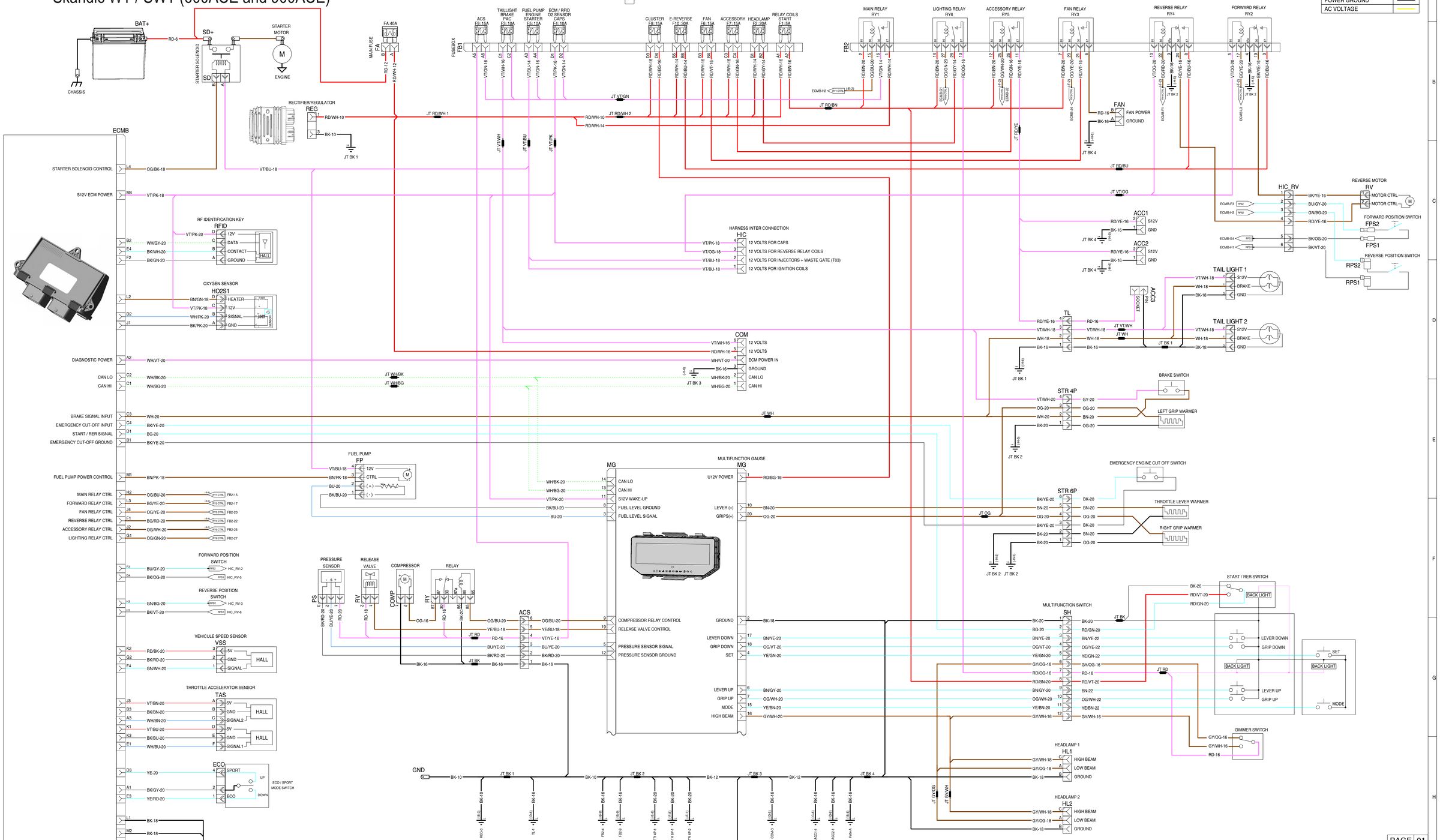

2021 *Main Harness*

Expedition SE (900ACE and 900ACE Turbo)

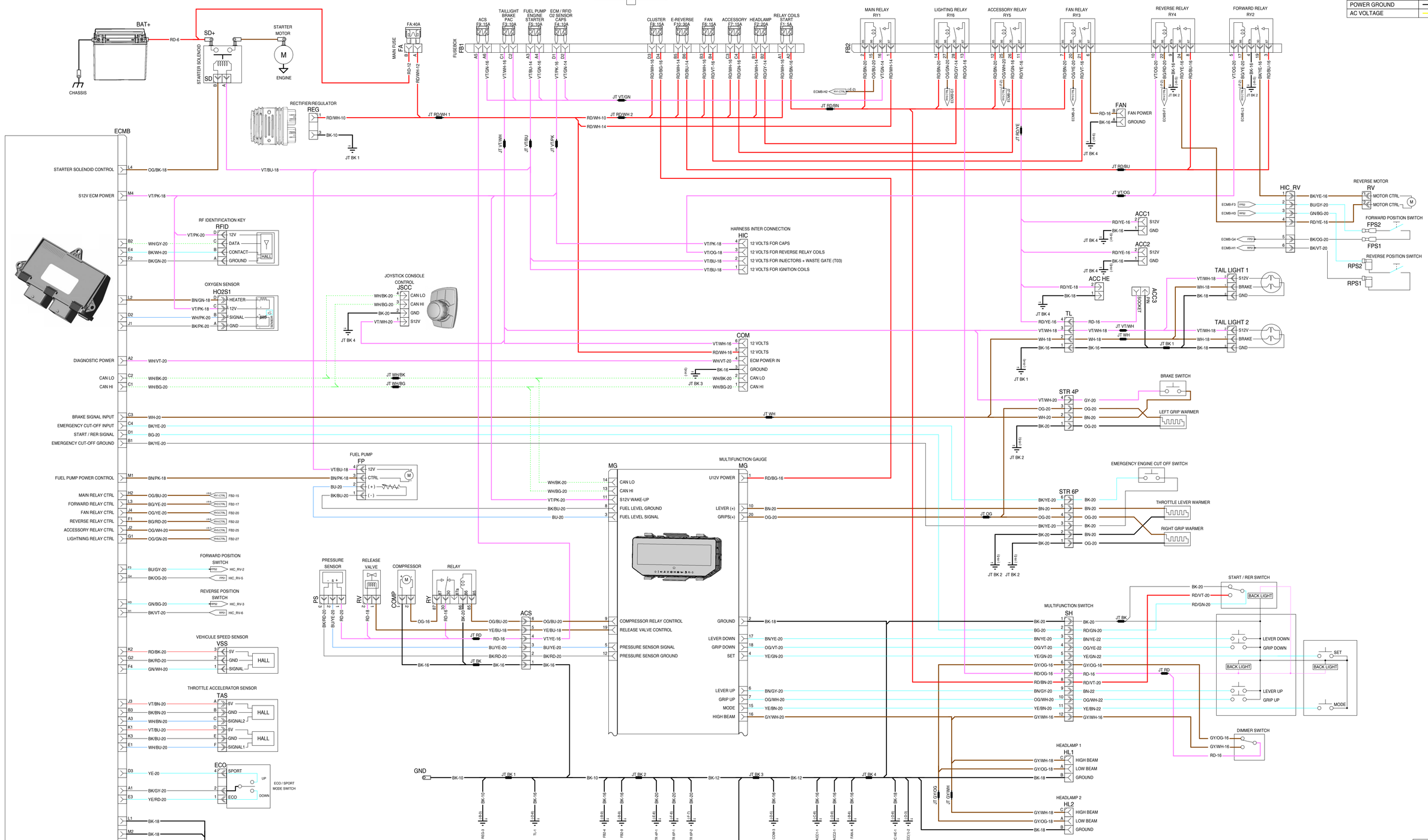

2021 *Main Harness*

Renegade X and XRS

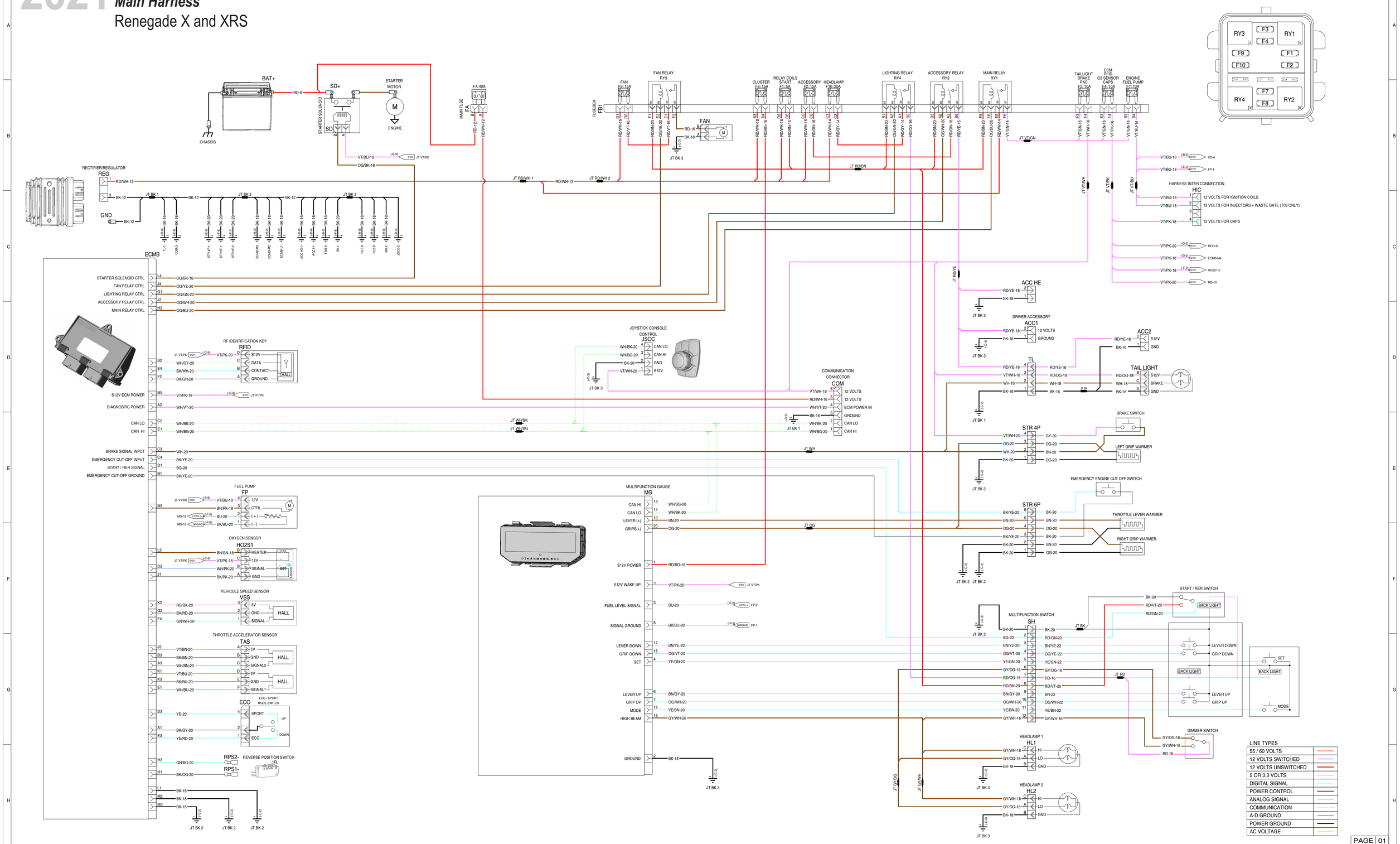

PAGE 01

REF: 515178964 REV: 1

2021 *Main Harness*

Grand Touring Limited (900ACE and 900ACE Turbo)
Renegade Enduro (900ACE and 900ACE Turbo)

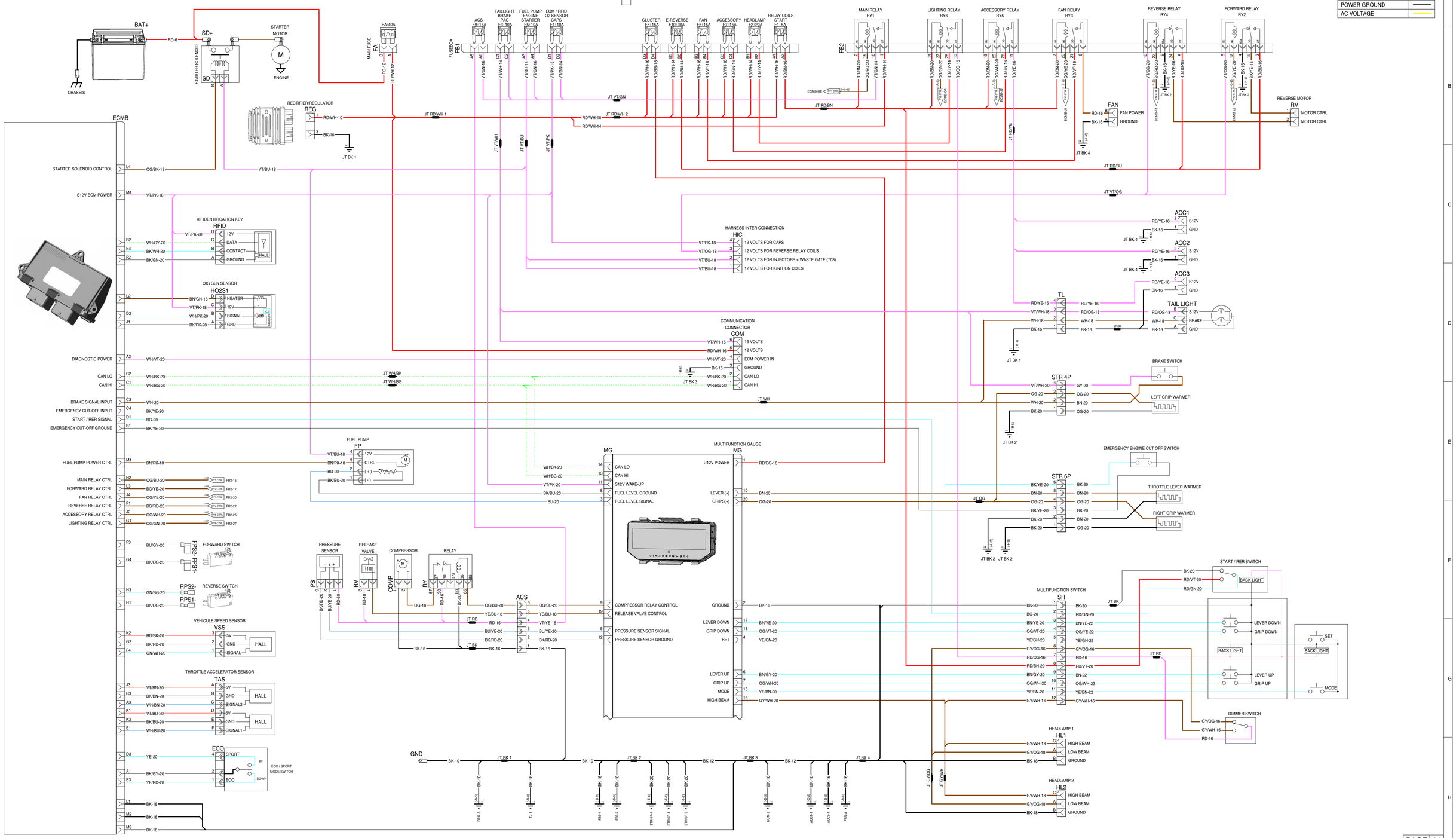

PAGE 01

REF: 515178731 REV: 1

2021 *Main Harness*

Expedition LE / SE (600R E-TEC)
Expedition Xtreme (850 E-TEC)
Skandic WT (600R E-TEC)

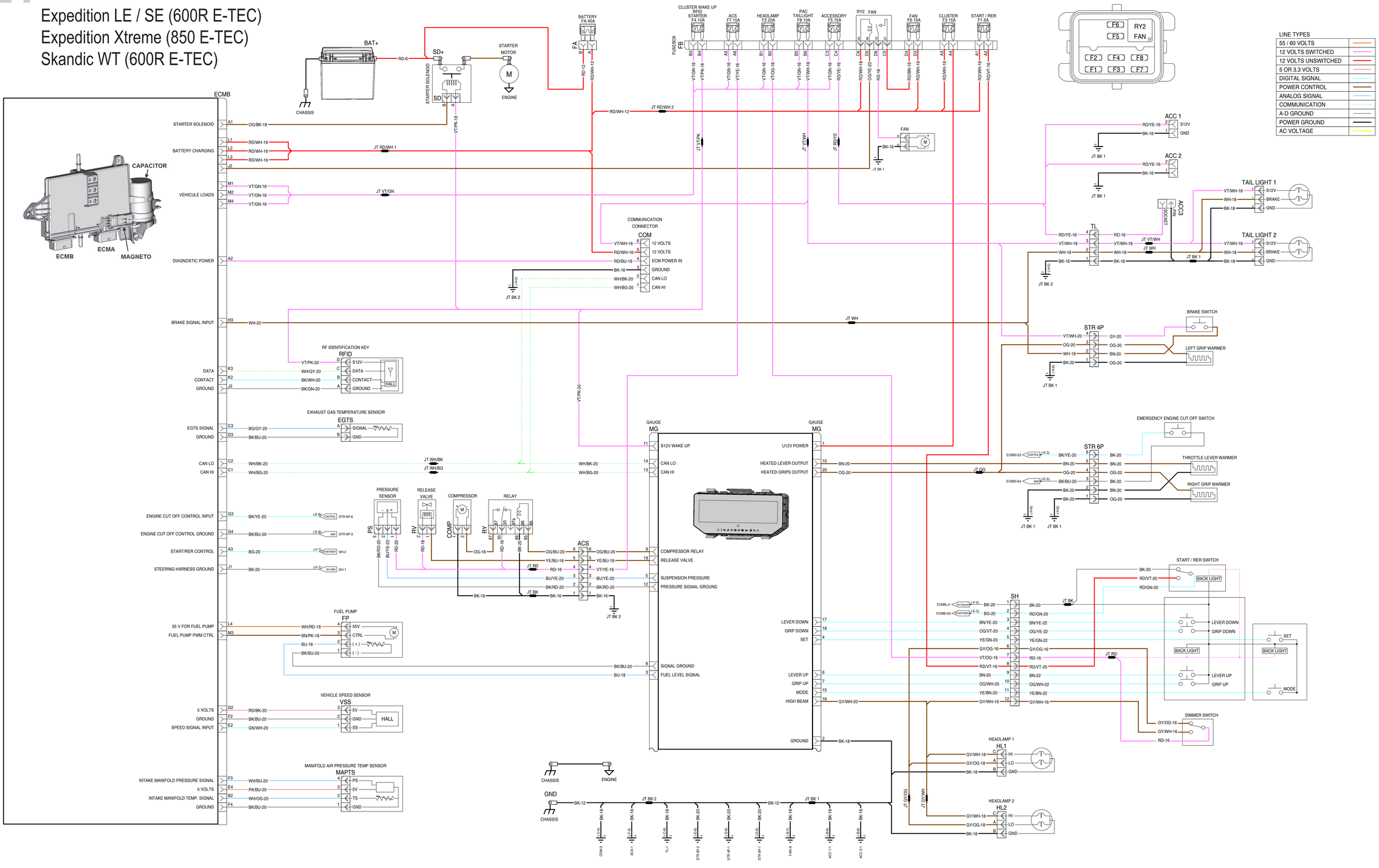

PAGE 01

REF: 515178956 REV:

2021 *Main Harness*

Expedition SE (600R E-TEC)

With Large Panoramic
7.8" Wide LCD Display

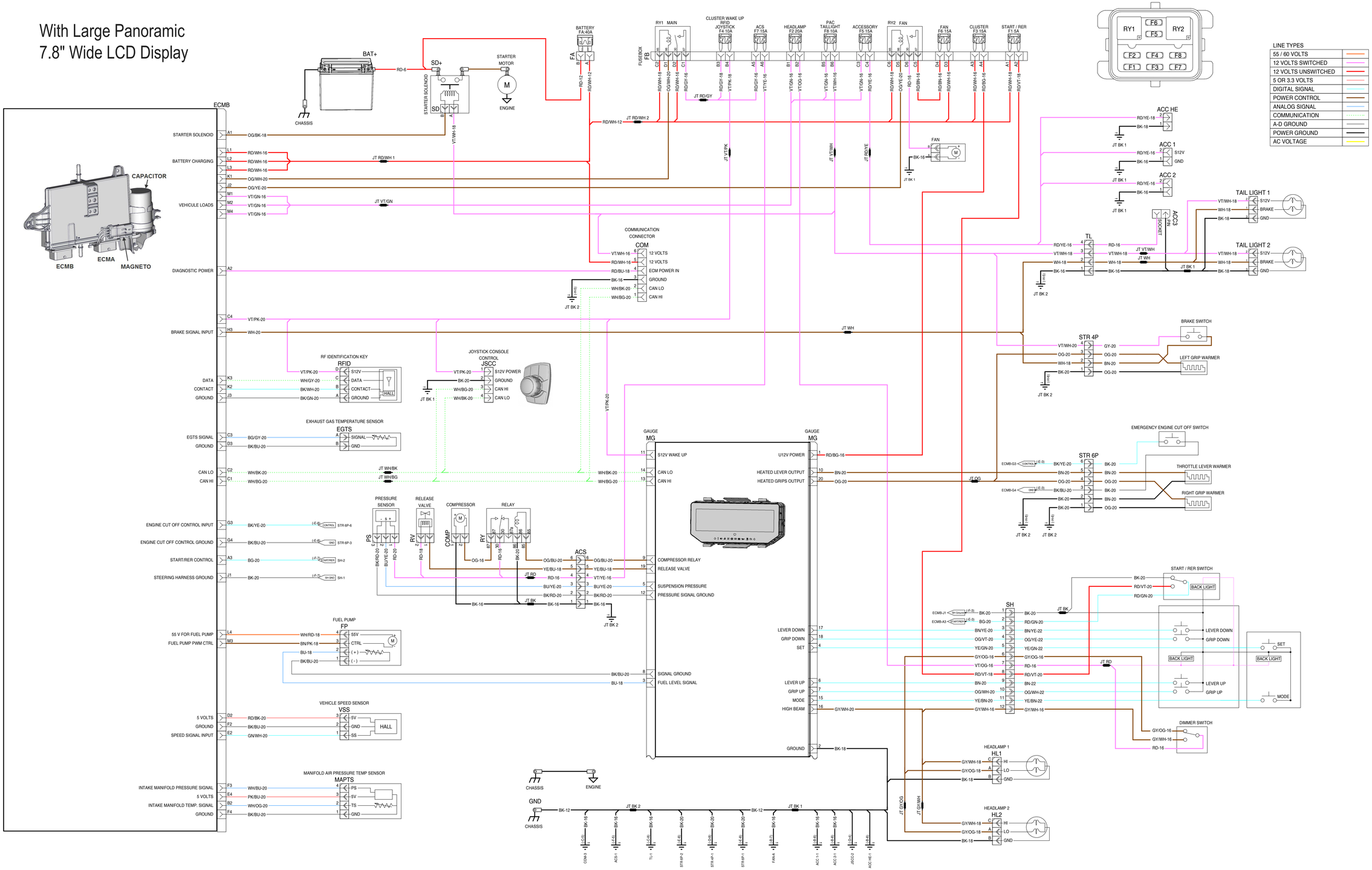

PAGE 01

REF: 515178944 REV:

2021 *Main Harness*

Expedition SWT (600R E-TEC)
Skandic SWT (600R E-TEC)

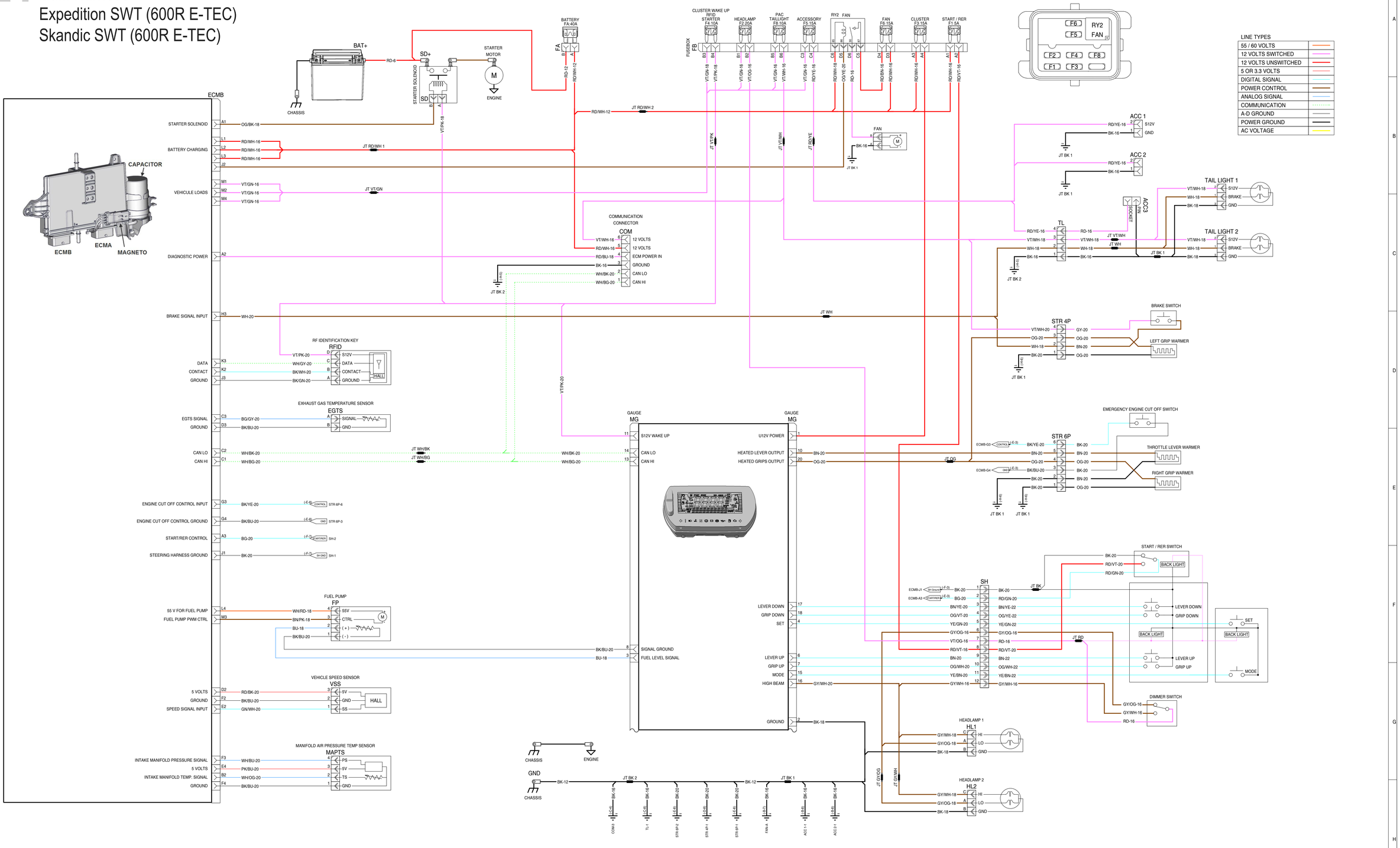

PAGE 01

REF: 515178957 REV:

2021 *Main Harness*

Grand Touring Limited (600R E-TEC)
Renegade Enduro (600R and 850 E-TEC)

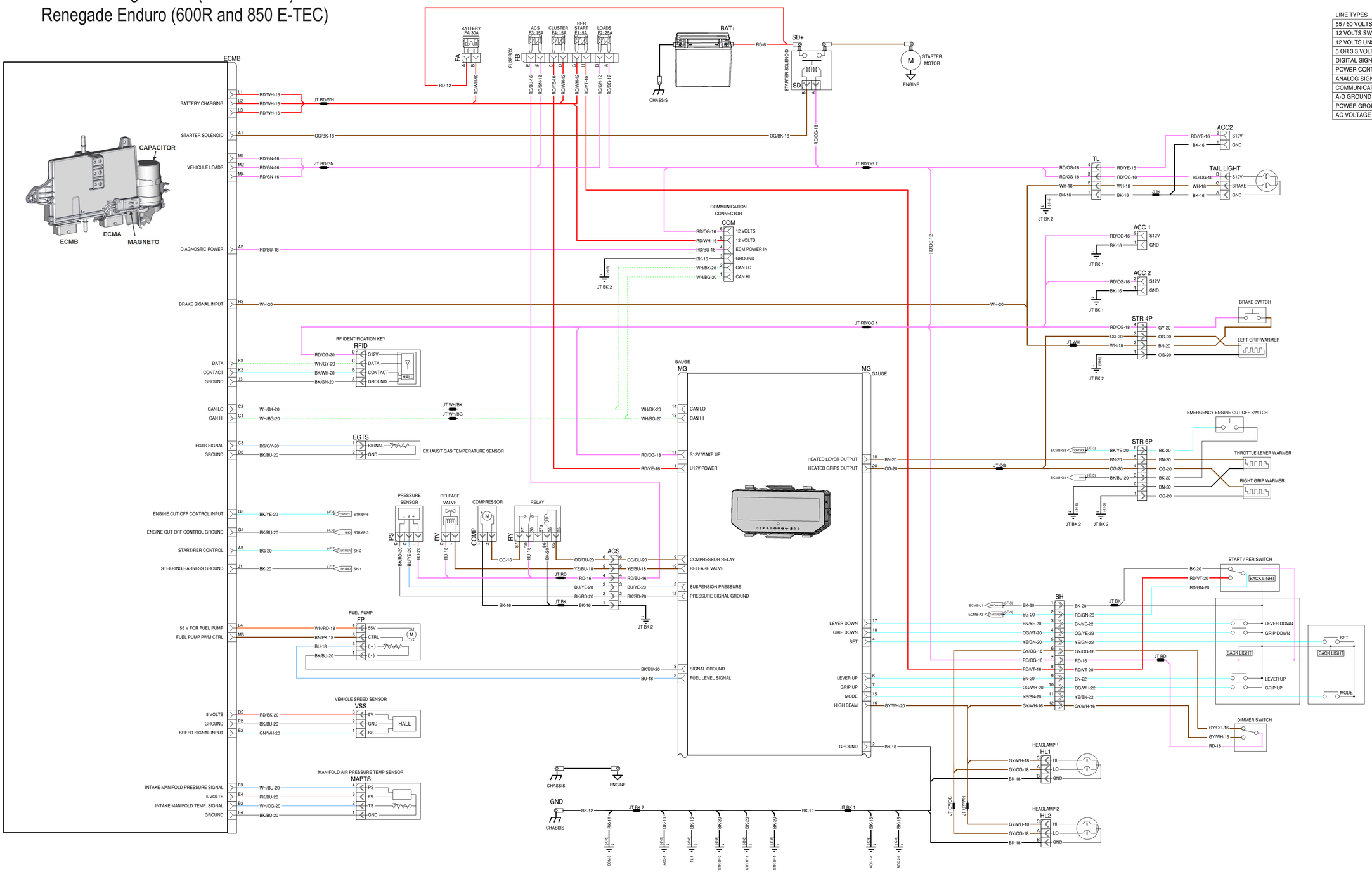

PAGE 01

REF: 515178647 REV:

2021

Main Harness 850 E-TEC

SHOT Start
- Backcountry (X and XRS)

Manual Start
- Backcountry (STD, X and XRS)
- MZX (TNT, X and XRS)
- Renegade (Adrenaline, TNT, X and XRS)

(With 4.5" or 7.2" Digital Display)

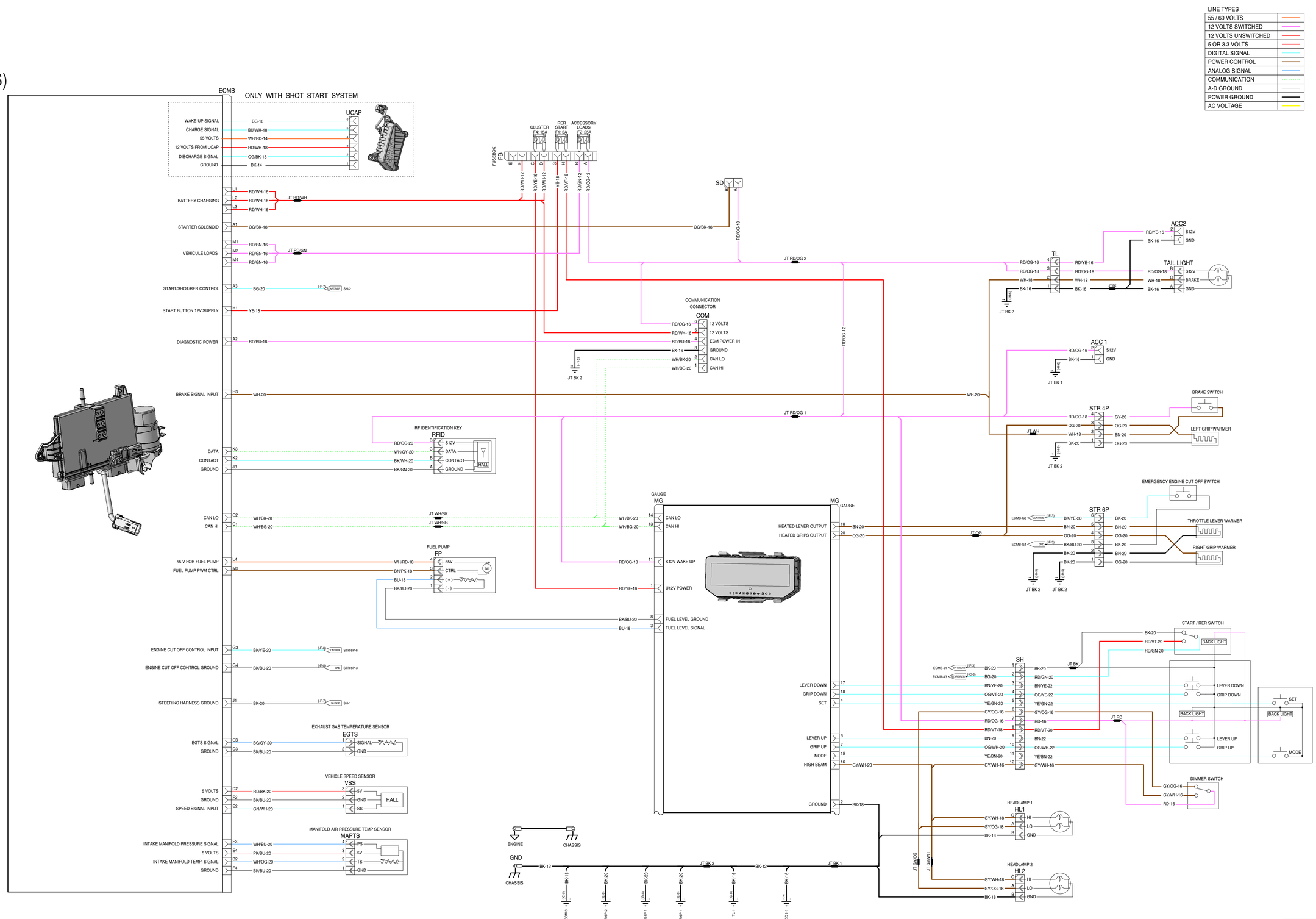

PAGE 01

REF: 515178889 REV:

2021 *Main Harness 600R and 850 E-TEC*

Electric Start
Backcountry (STD, X and XRS)
MXZ (TNT, X and XRS)
Renegade (Adrenaline, Enduro, X and XRS)

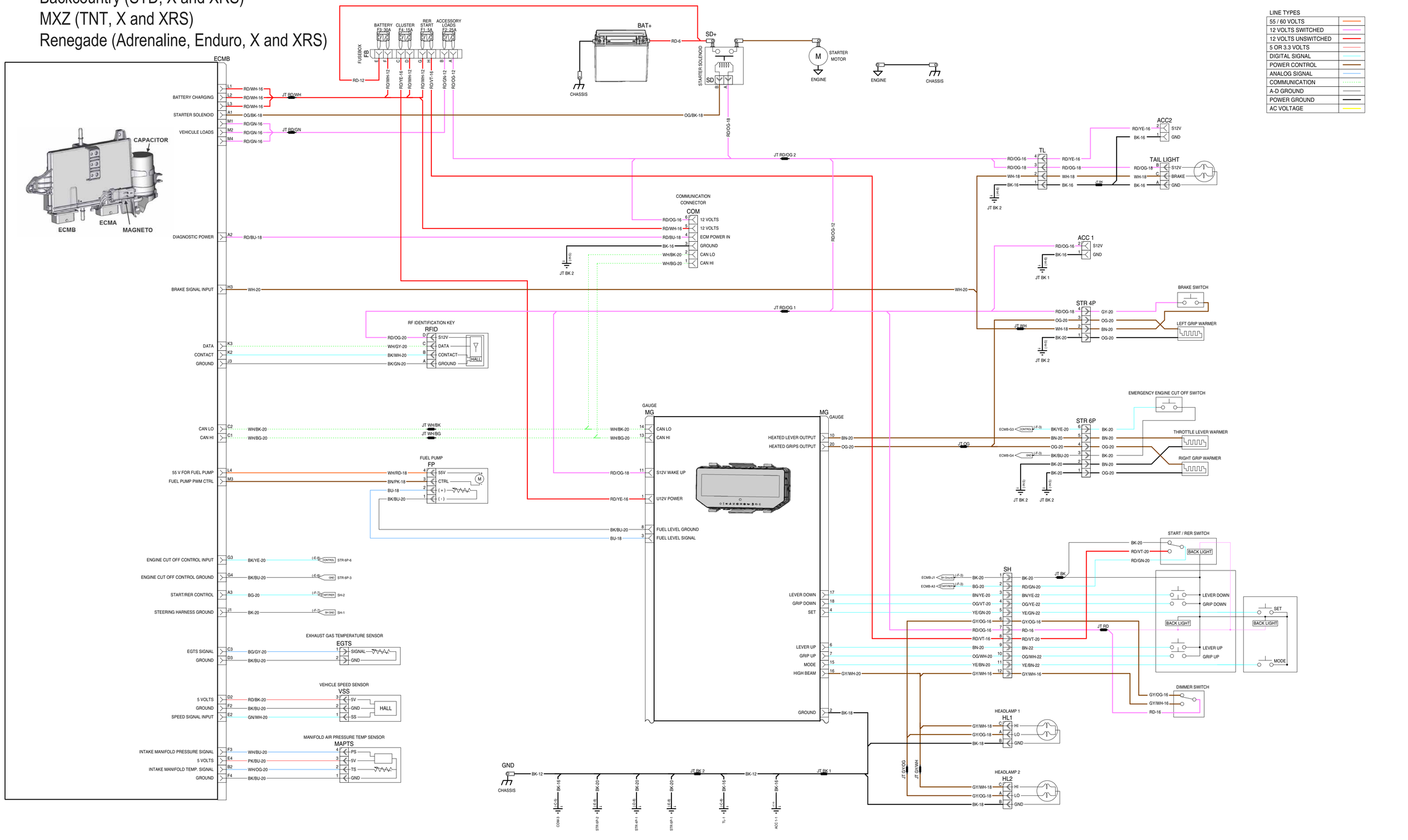

PAGE 01
REF: 515178605
REV:

2021 *Main Harness*

Backcountry X and XRS 850 E-ETC
MXZ X and XRS 850 E-ETC
Renegade X and XRS 850 E-ETC

With Large Panoramic 7.8" Wide LCD Display

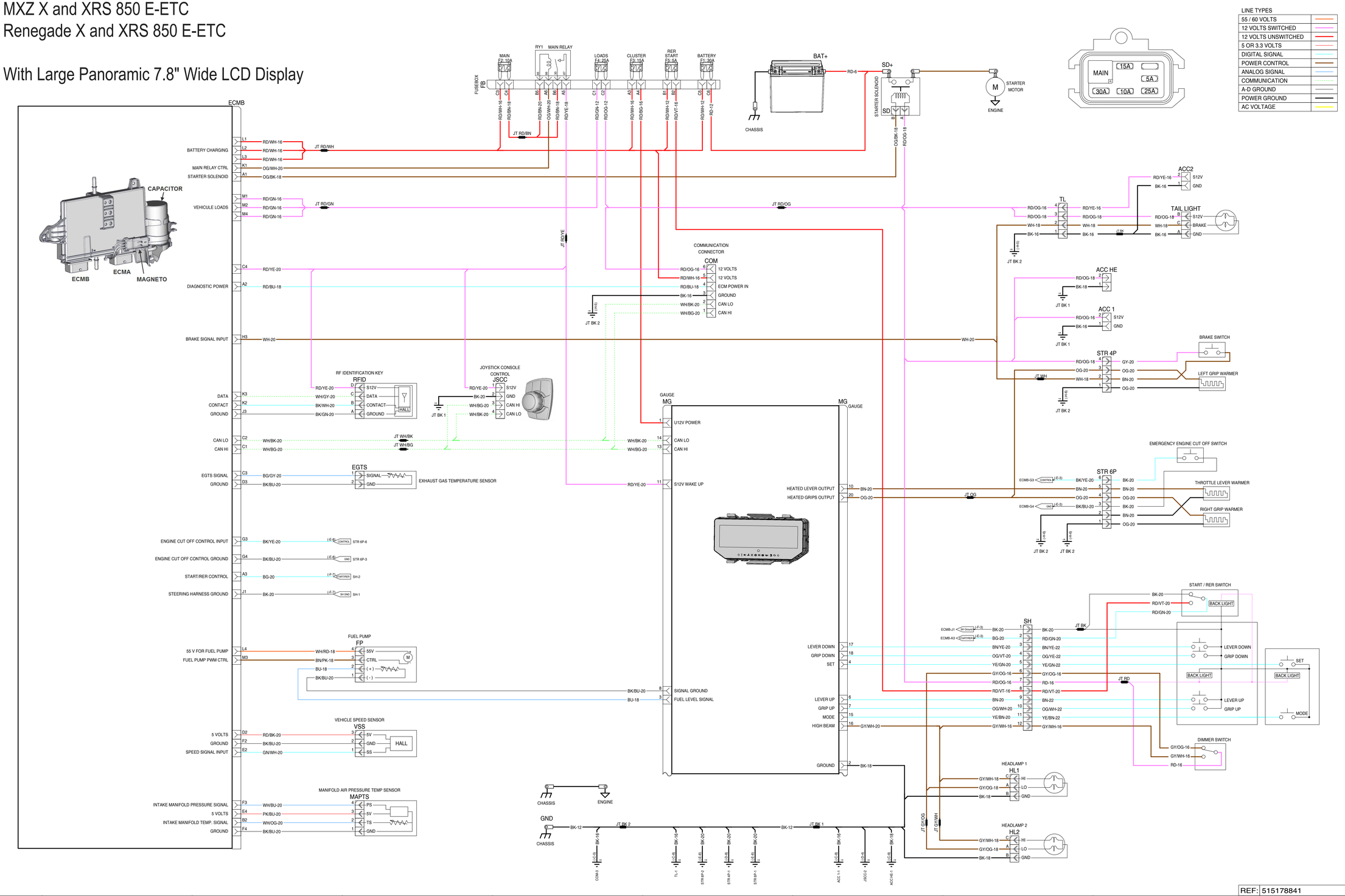

PAGE 01
REF: 515178841
REV:

2021 *Main Harness*

Freeride and Summit
(Manual and SHOT start)

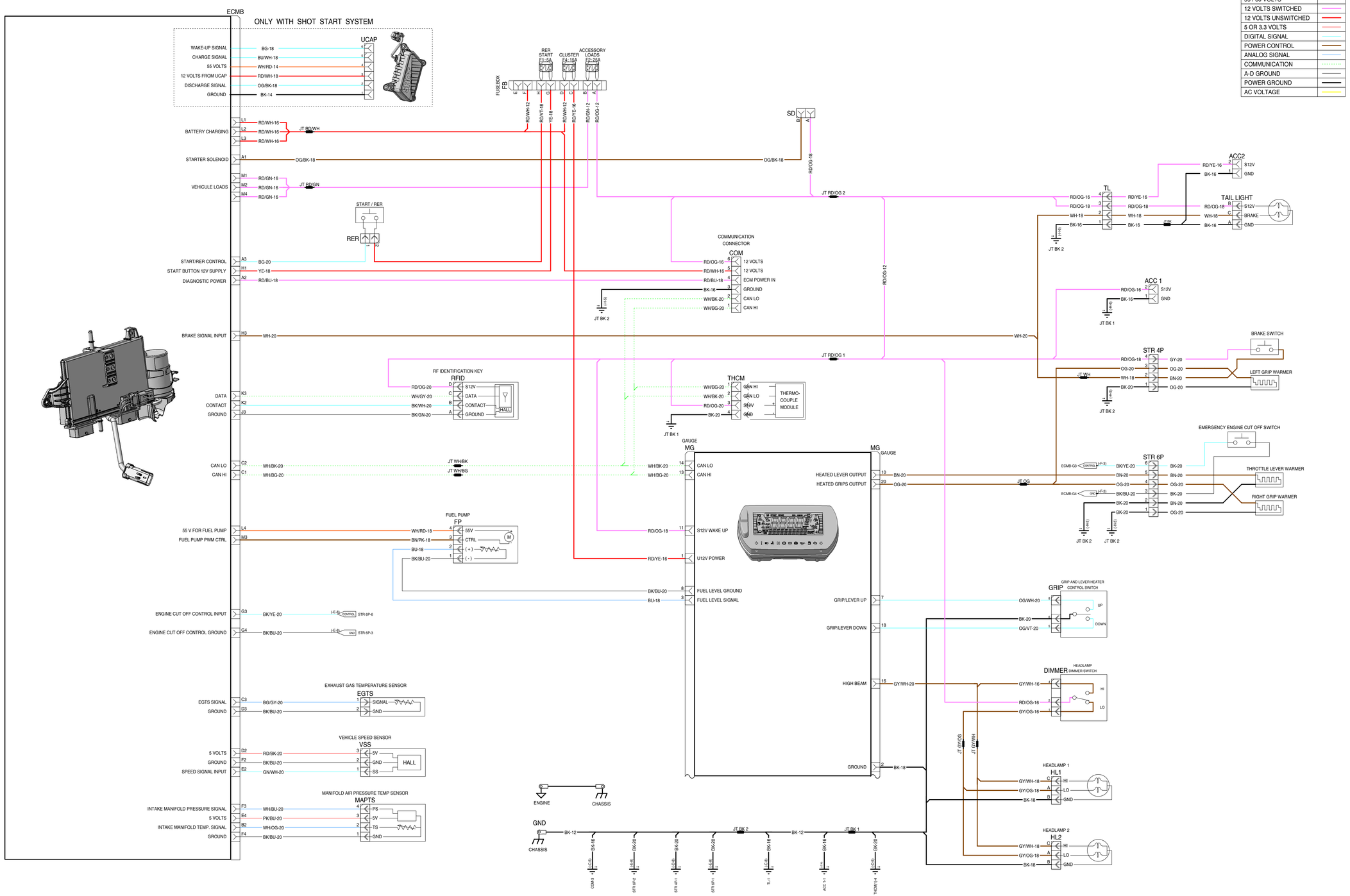

REF:	515178794	REV:	

PAGE 01

2021 *Main Harness*

Freeride and Summit
(Electric start)

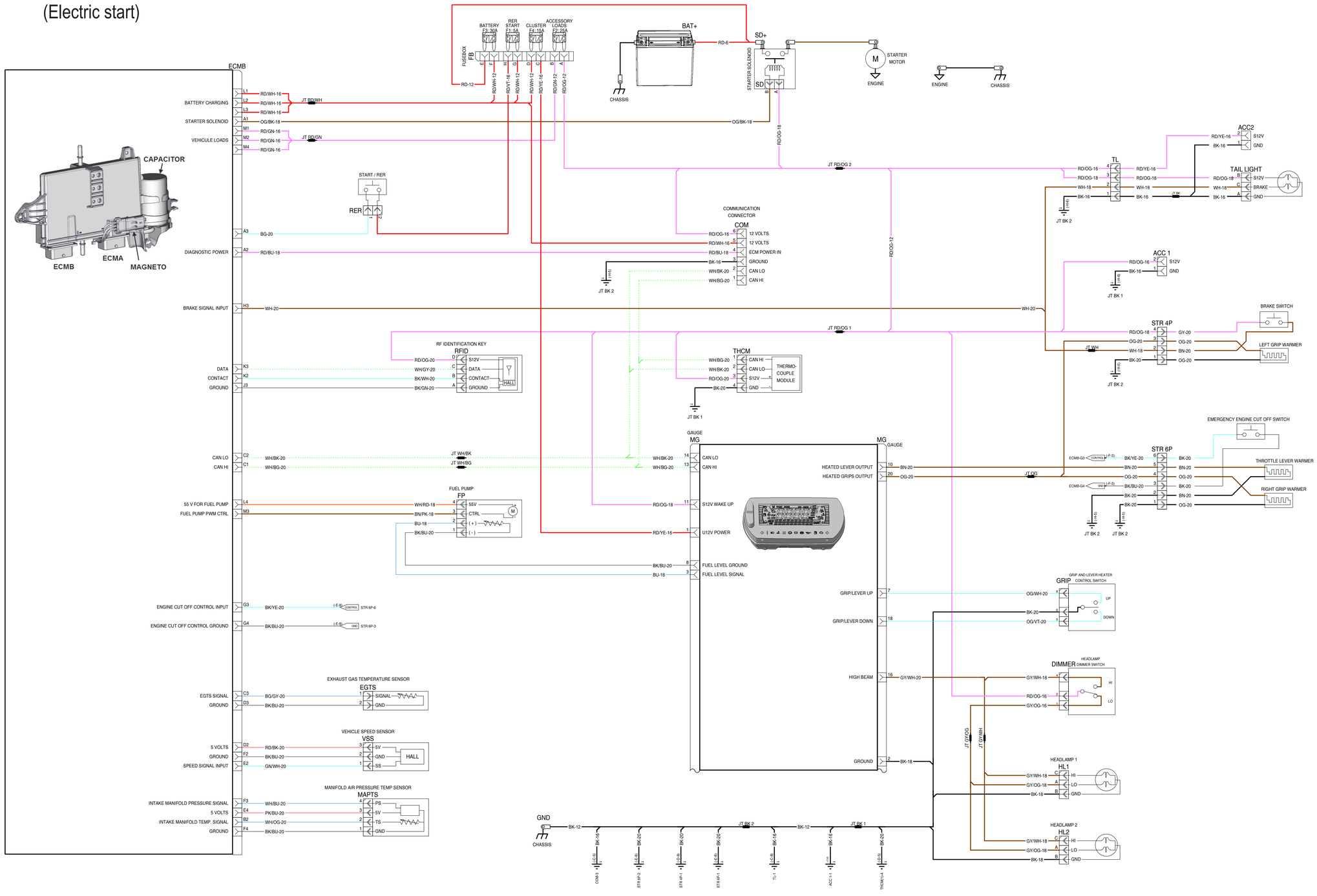

PAGE	01
REF: 515178793	REV:

2021 *Accessories Harnesses*

All except
Grand Touring Limited
Renegade Enduro

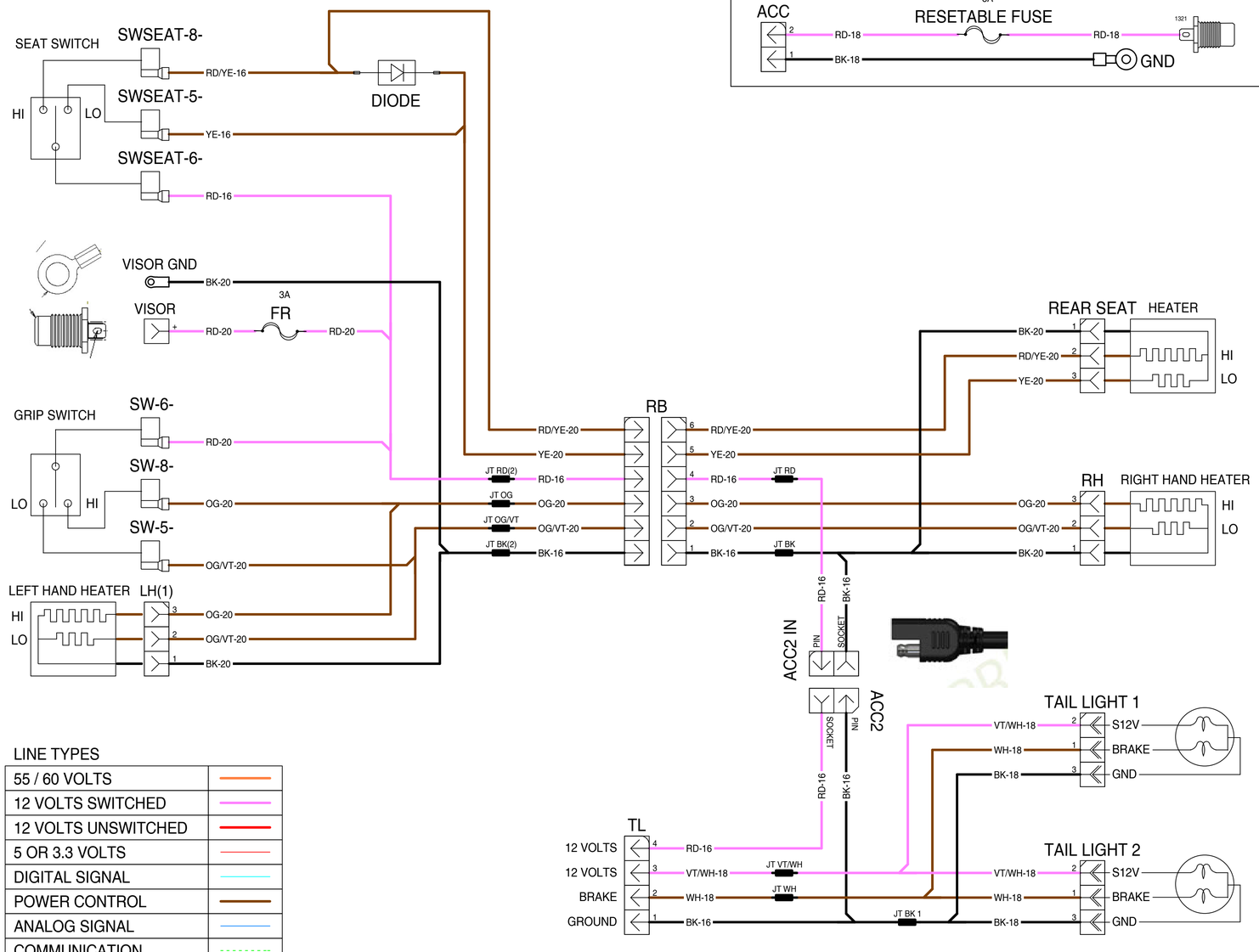

LINE TYPES	
55 / 60 VOLTS	
12 VOLTS SWITCHED	
12 VOLTS UNSWITCHED	
5 OR 3.3 VOLTS	
DIGITAL SIGNAL	
POWER CONTROL	
ANALOG SIGNAL	
COMMUNICATION	
A-D GROUND	
POWER GROUND	
AC VOLTAGE	

DRIVER HEATED VISOR

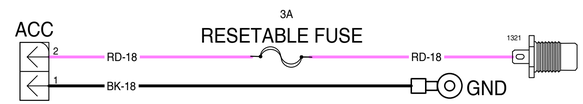

CELLPHONE HARNESS

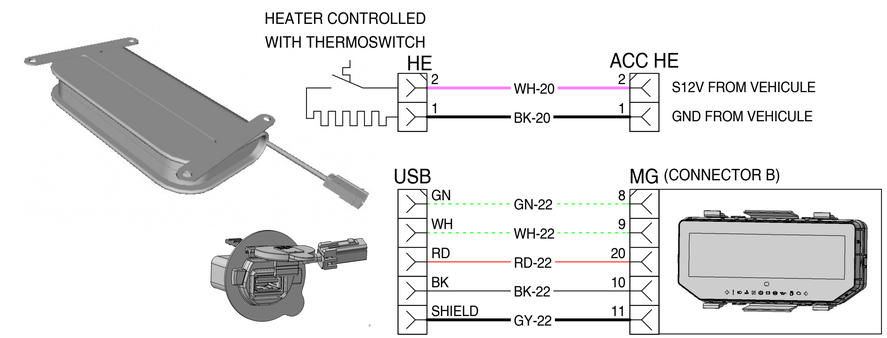

DRIVER HEATED SEAT

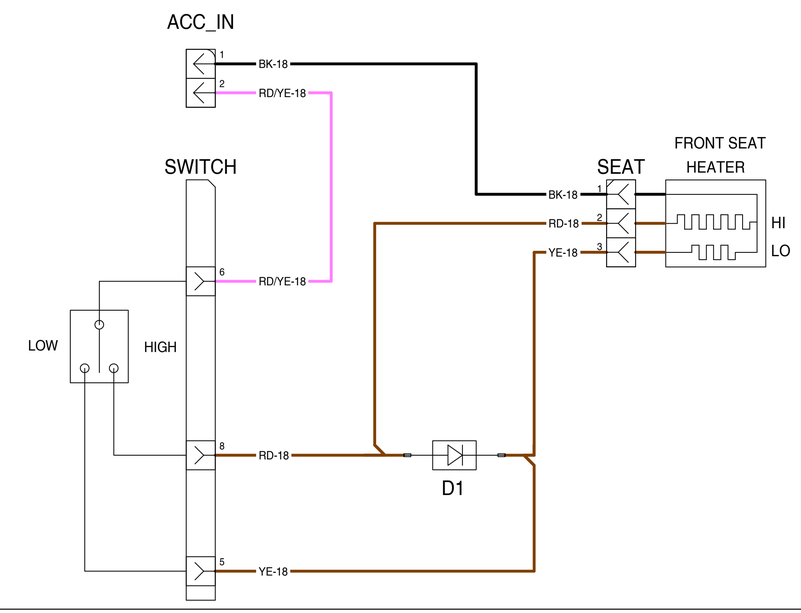

AIR CONTROLLED SUSPENSION

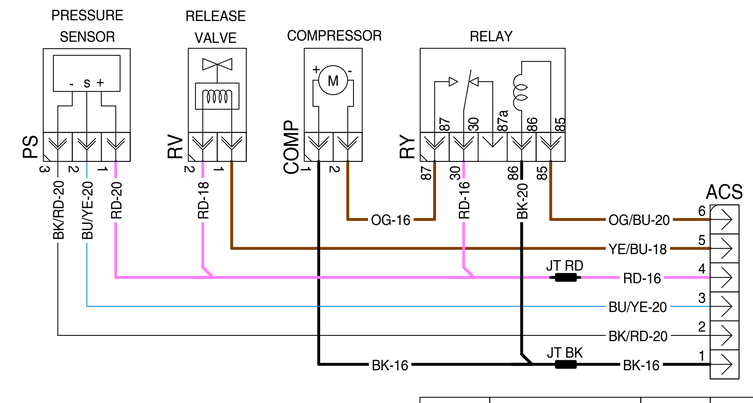

2021 *Accessories Harnesses*

Grand Touring Limited
Renegade Enduro

LINE TYPES	
55 / 60 VOLTS	
12 VOLTS SWITCHED	
12 VOLTS UNSWITCHED	
5 OR 3.3 VOLTS	
DIGITAL SIGNAL	
POWER CONTROL	
ANALOG SIGNAL	
COMMUNICATION	
A-D GROUND	
POWER GROUND	
AC VOLTAGE	

DRIVER HEATED SEAT

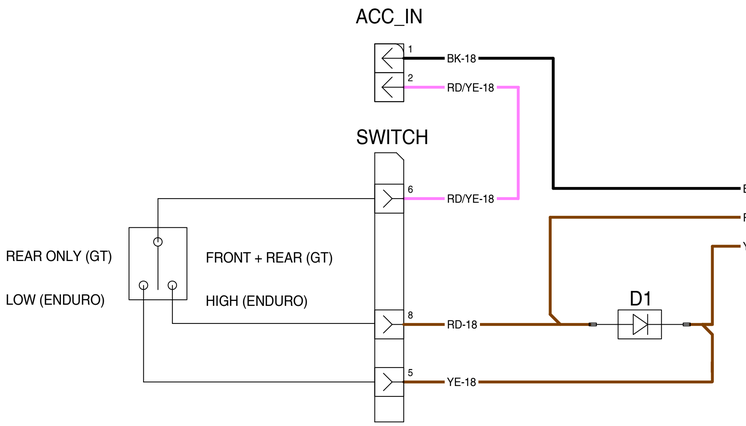

Y ADAPTER FOR PASSENGER HEATED SEAT

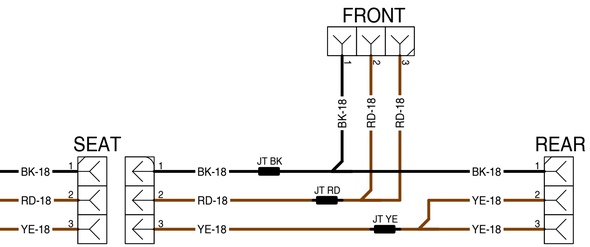

DRIVER HEATED VISOR

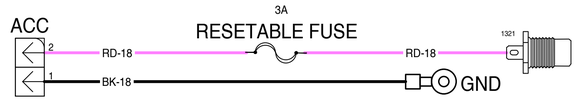

PASSENGER HATED ACCESSORIES

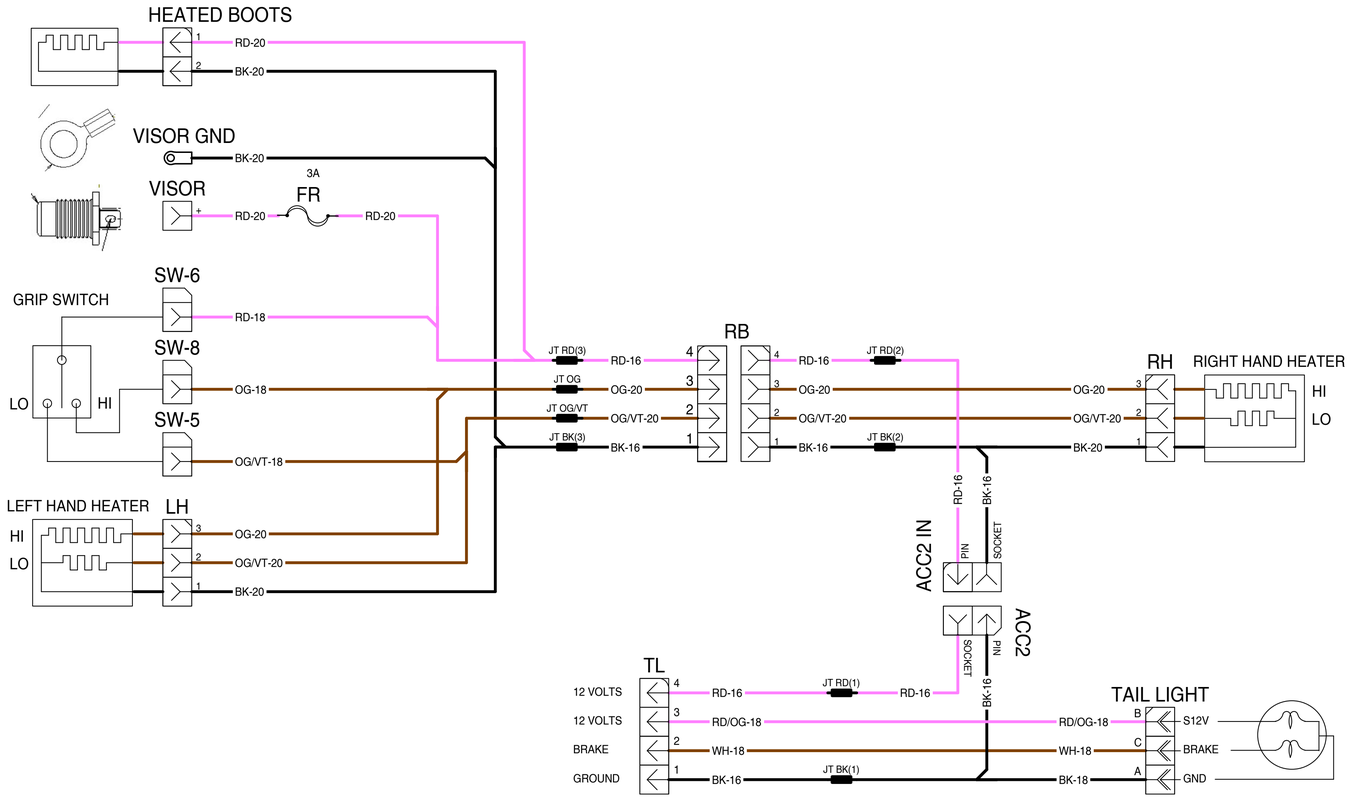

AIR CONTROLLED SUSPENSION HARNESS

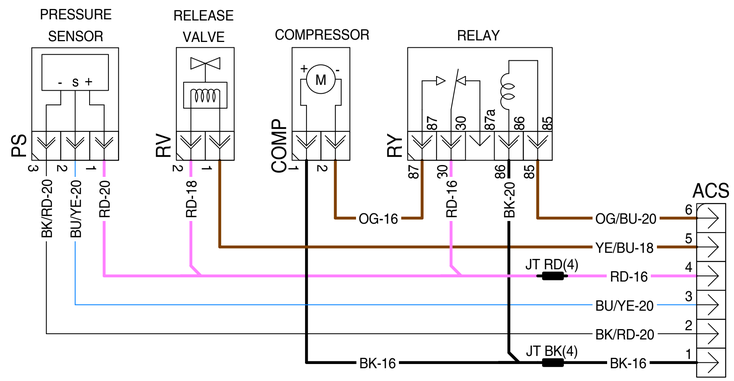

2021 *Engine Harness*

600 EFI

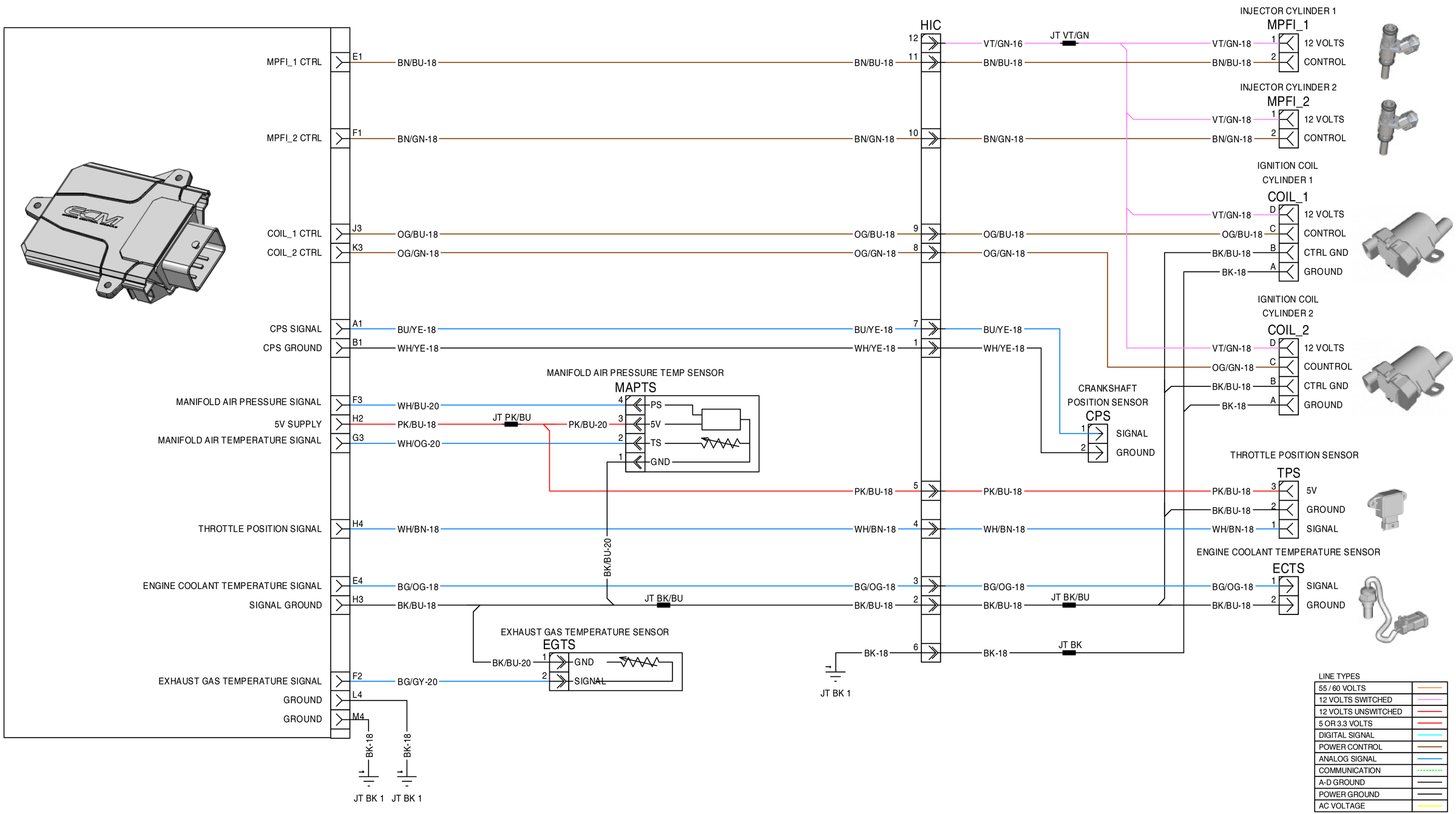

2021 *Engine Harness*
600RS

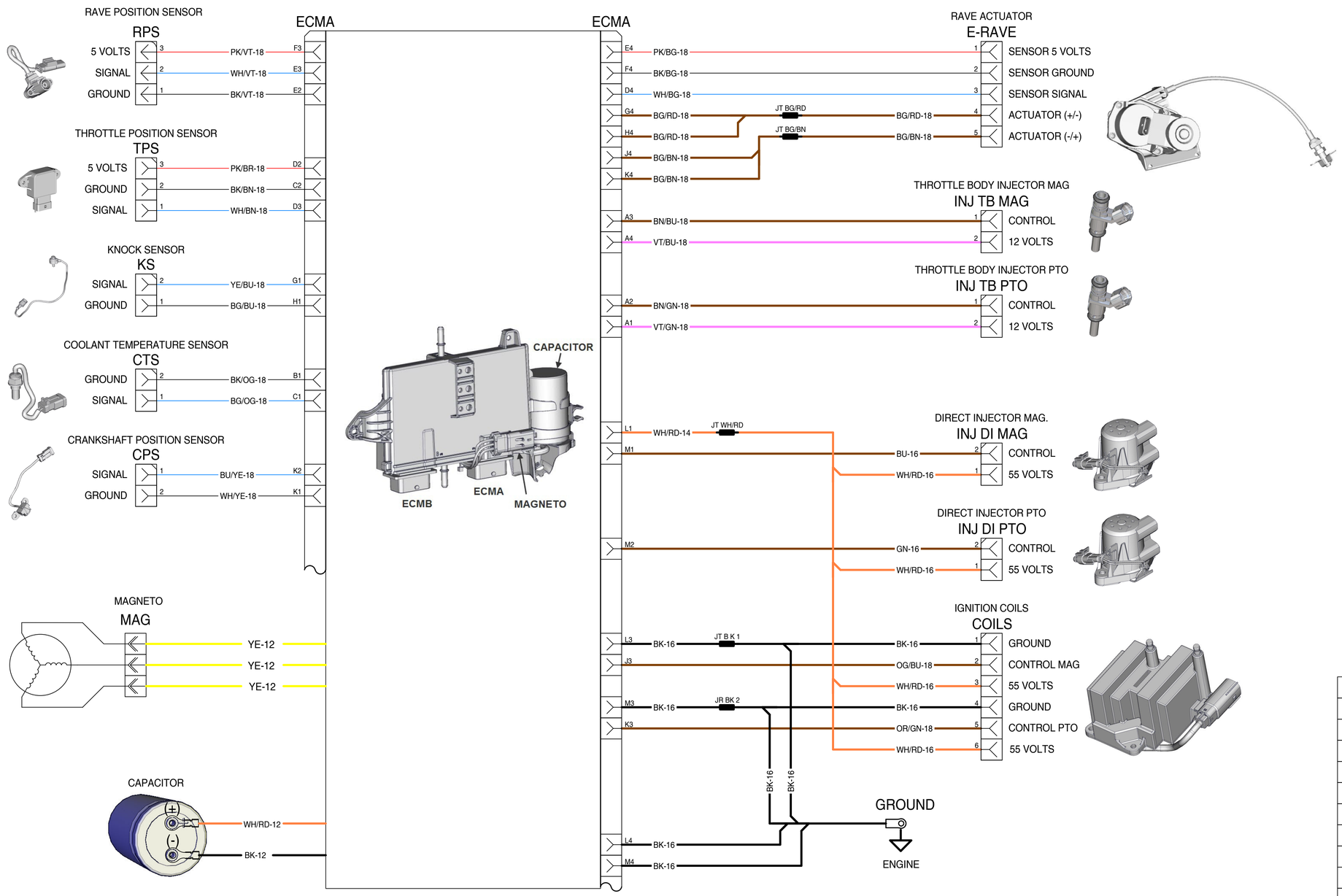

LINE TYPES

55 / 60 VOLTS	
12 VOLTS SWITCHED	
12 VOLTS UNSWITCHED	
5 OR 3.3 VOLTS	
DIGITAL SIGNAL	
POWER CONTROL	
ANALOG SIGNAL	
COMMUNICATION	
A-D GROUND	
POWER GROUND	
AC VOLTAGE	

REF	864 451	REV	1

2021 *Engine Harness*
600 ACE

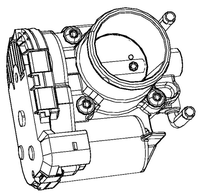

LINE TYPES

55 / 60 VOLTS	
12 VOLTS SWITCHED	
12 VOLTS UNSWITCHED	
5 OR 3.3 VOLTS	
DIGITAL SIGNAL	
POWER CONTROL	
ANALOG SIGNAL	
COMMUNICATION	
A-D GROUND	
POWER GROUND	
AC VOLTAGE	

REF 864 347 REV

2021 *Engine Harness*

600R E-TEC (Manual and Electric Start)

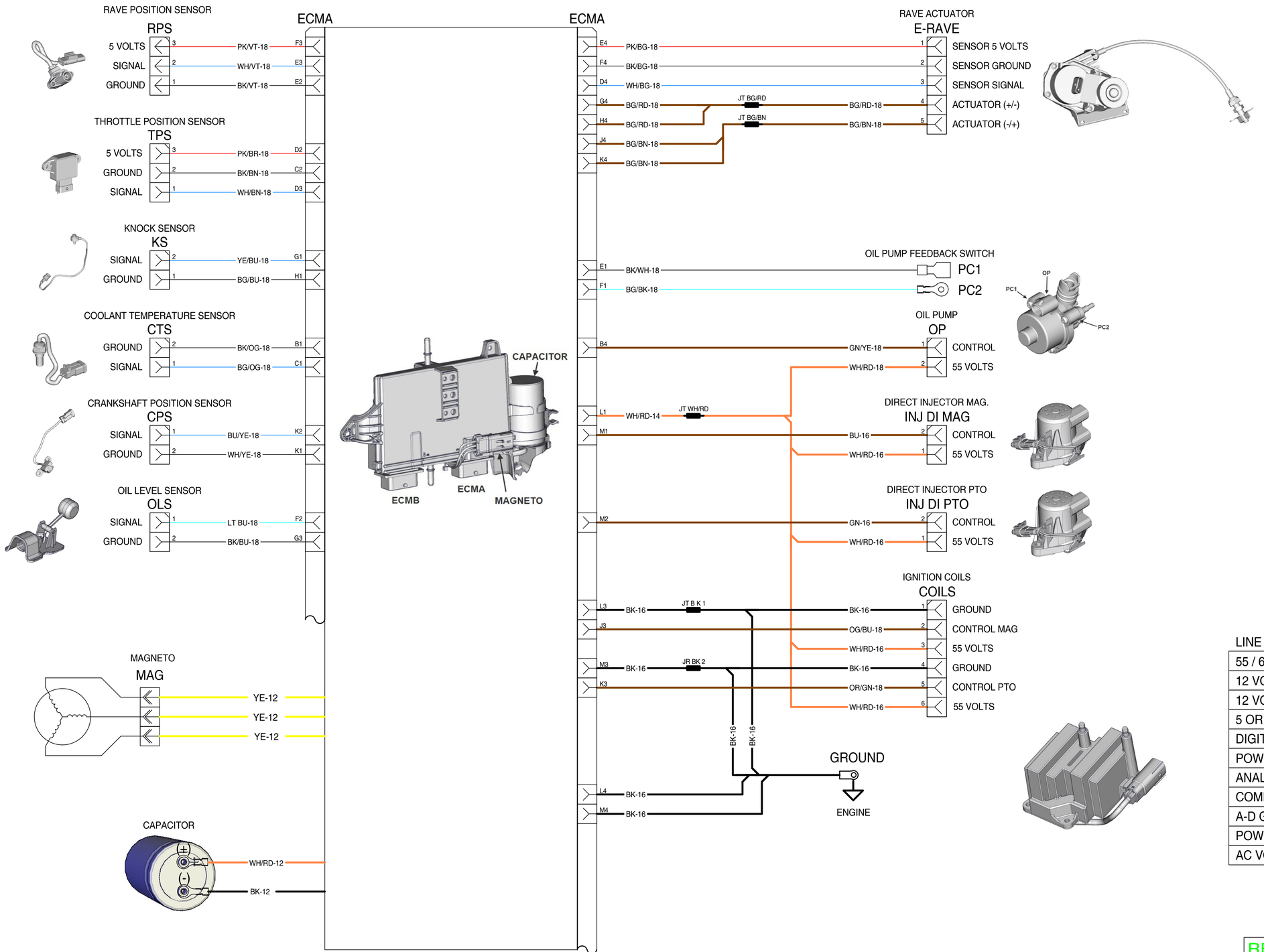

LINE TYPES

55 / 60 VOLTS	
12 VOLTS SWITCHED	
12 VOLTS UNSWITCHED	
5 OR 3.3 VOLTS	
DIGITAL SIGNAL	
POWER CONTROL	
ANALOG SIGNAL	
COMMUNICATION	
A-D GROUND	
POWER GROUND	
AC VOLTAGE	

REF	864 449	REV	1

2021 *Engine Harness*

600R E-TEC
(SHOT Start)

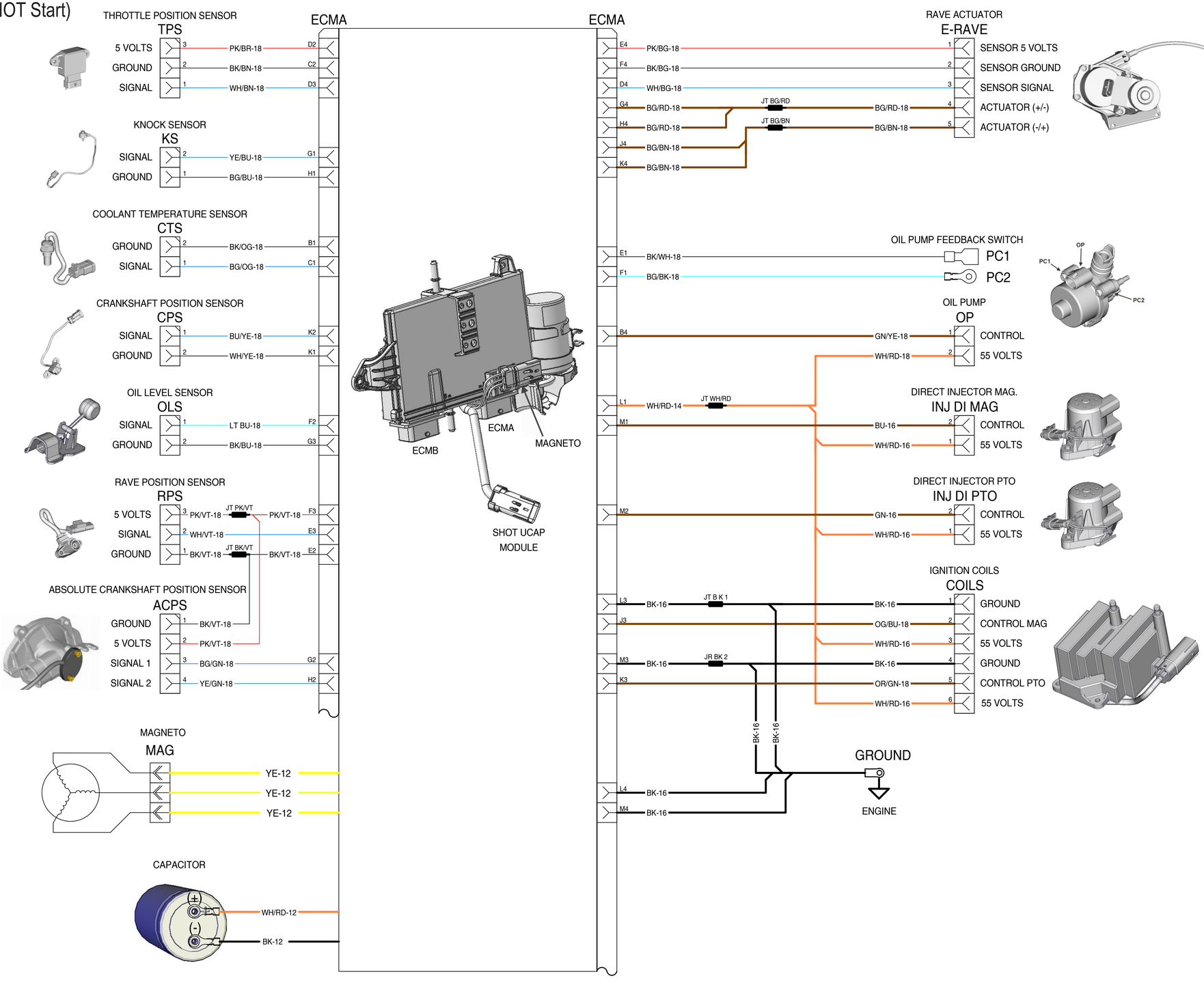

LINE TYPES

55 / 60 VOLTS	
12 VOLTS SWITCHED	
12 VOLTS UNSWITCHED	
5 OR 3.3 VOLTS	
DIGITAL SIGNAL	
POWER CONTROL	
ANALOG SIGNAL	
COMMUNICATION	
A-D GROUND	
POWER GROUND	
AC VOLTAGE	

REF	864 447	REV	1

2021 *Engine Harness*

850 E-TEC (Except SHOT and Turbo)

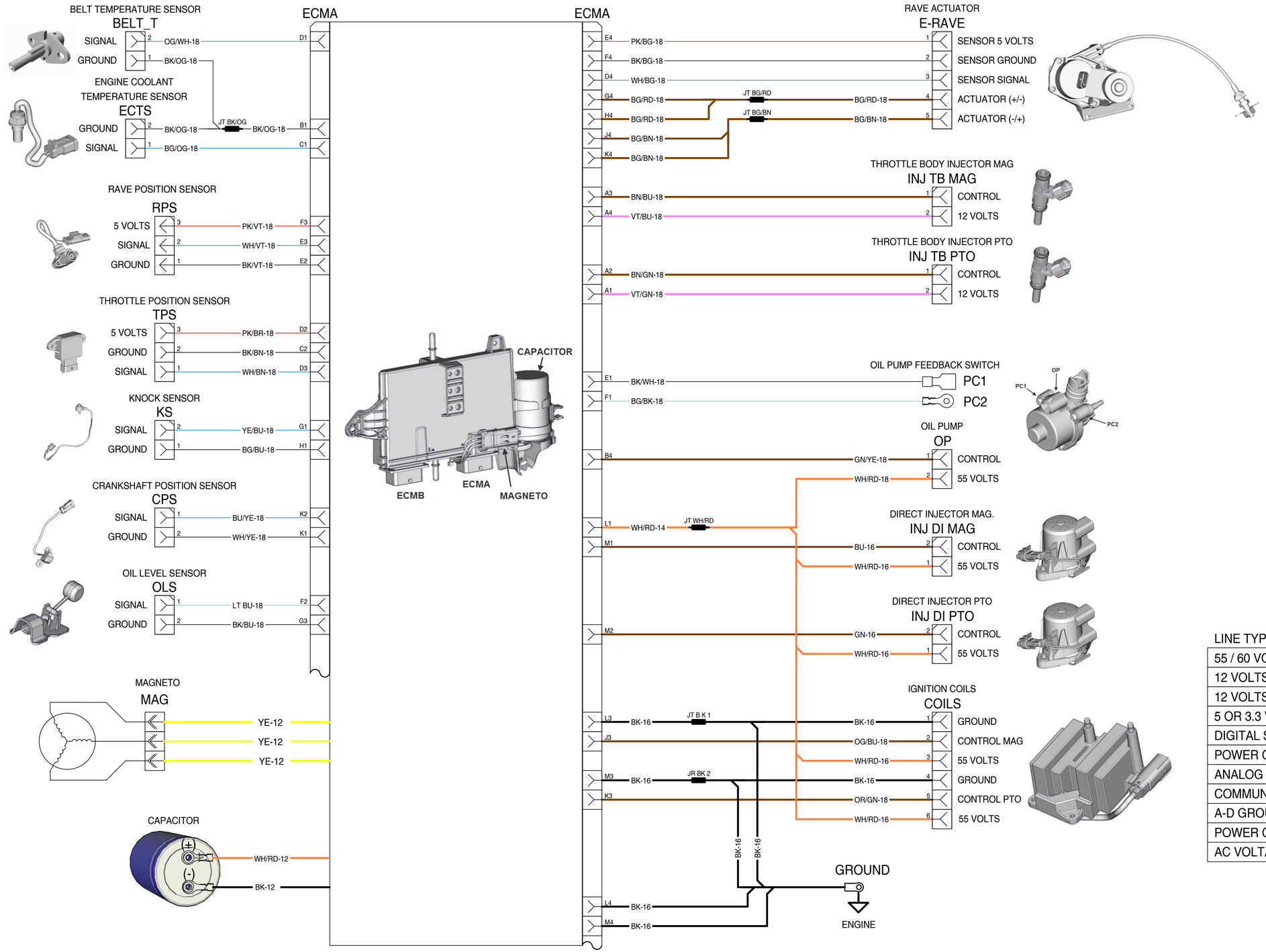

LINE TYPES

55 / 60 VOLTS	
12 VOLTS SWITCHED	
12 VOLTS UNSWITCHED	
5 OR 3.3 VOLTS	
DIGITAL SIGNAL	
POWER CONTROL	
ANALOG SIGNAL	
COMMUNICATION	
A-D GROUND	
POWER GROUND	
AC VOLTAGE	

REF	864 454	REV	1

2021 *Engine Harness*

850 E-TEC (SHOT Start except Turbo)

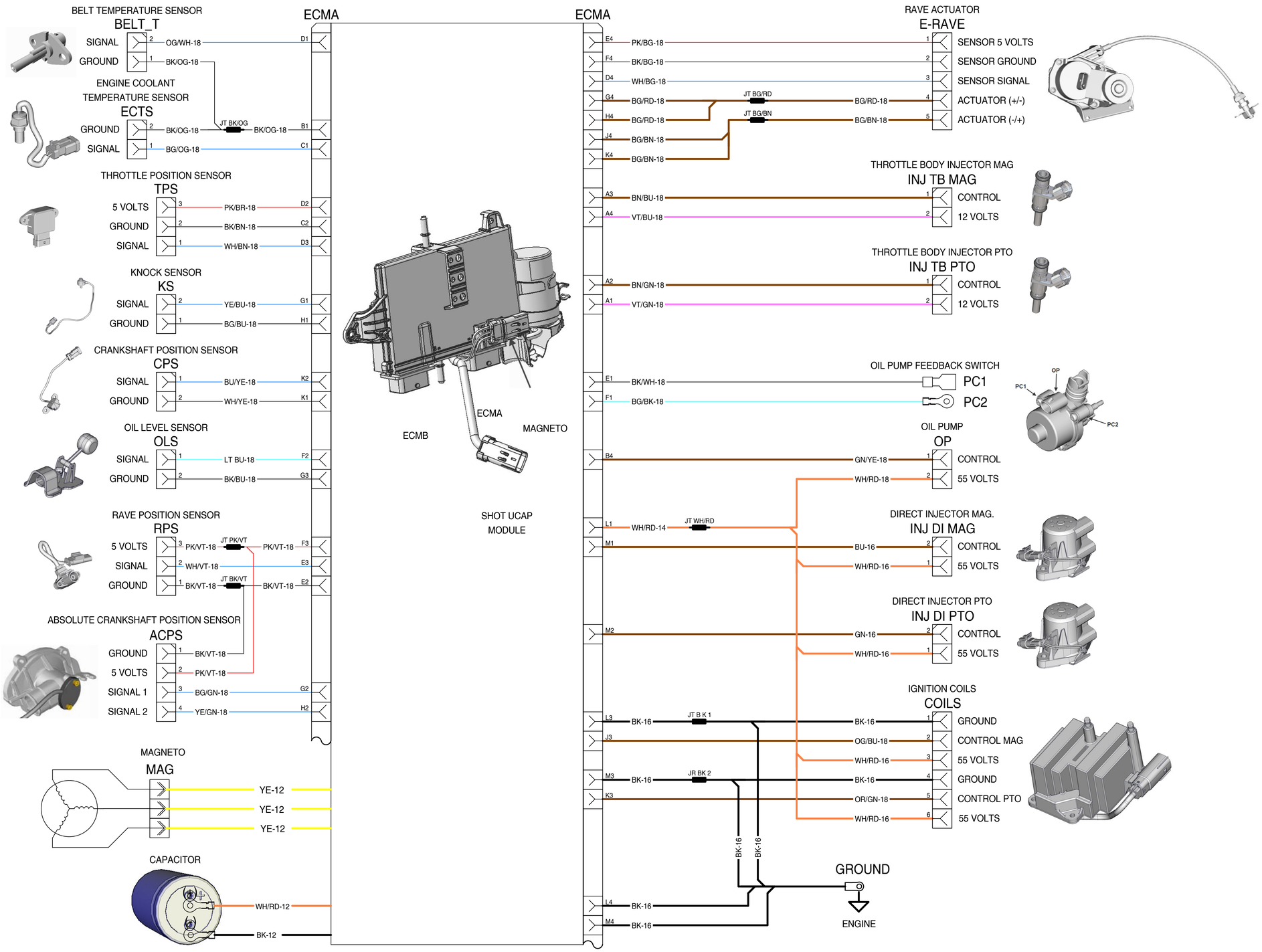

LINE TYPES

55 / 60 VOLTS	
12 VOLTS SWITCHED	
12 VOLTS UNSWITCHED	
5 OR 3.3 VOLTS	
DIGITAL SIGNAL	
POWER CONTROL	
ANALOG SIGNAL	
COMMUNICATION	
A-D GROUND	
POWER GROUND	
AC VOLTAGE	

REF	864 458	REV	1

2021 *Engine Harness*

850 E-TEC Turbo (Manual and SHOT Start)

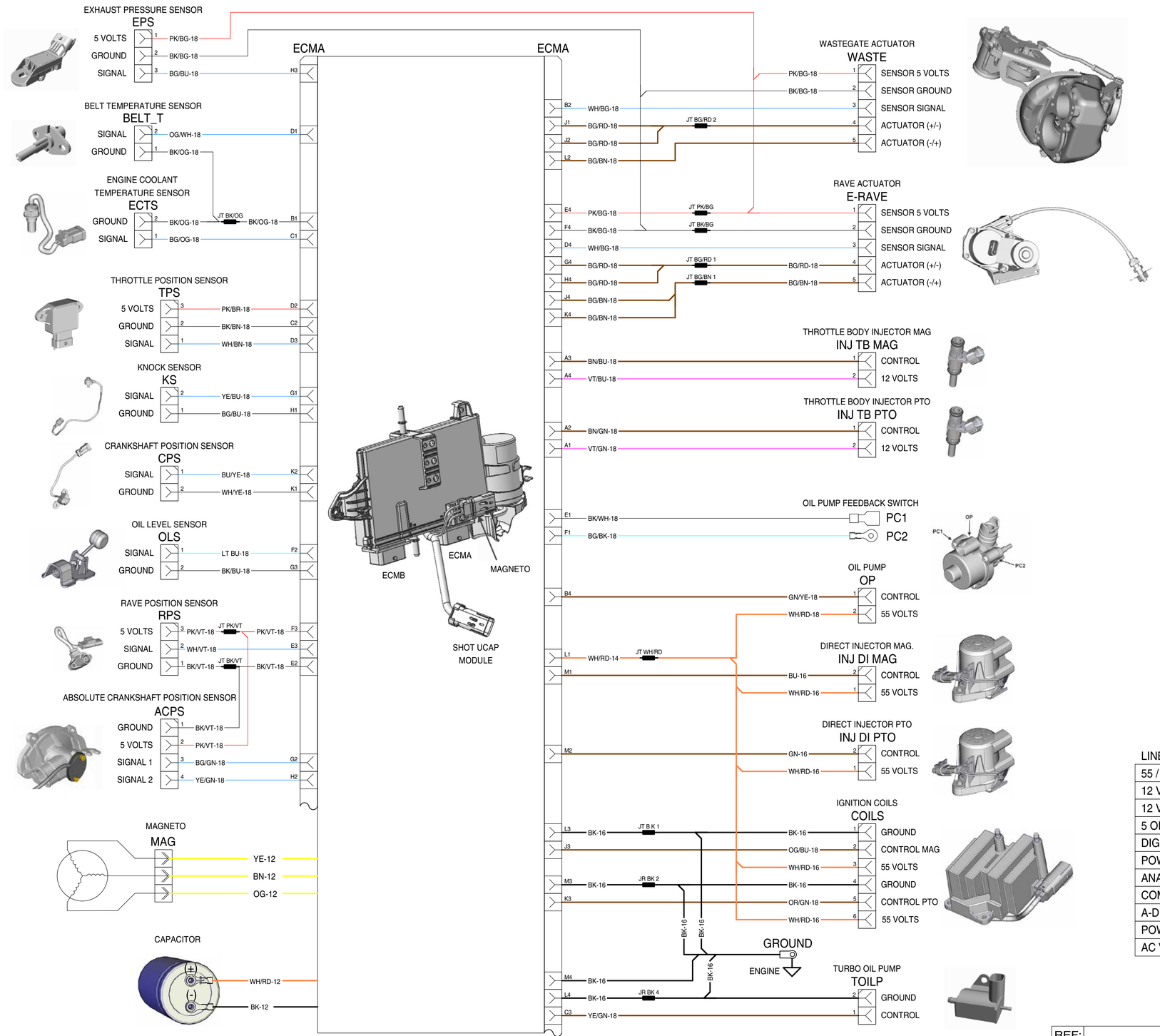

REF: 864 446 REV: 1

2021 *Engine Harness*

900 ACE
(except Turbo)

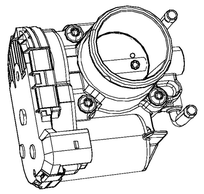

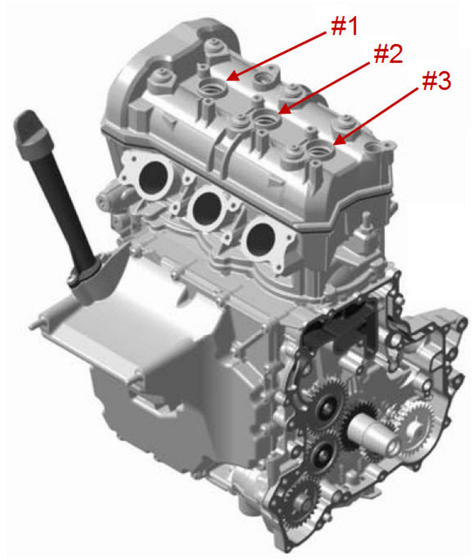

LINE TYPES

55 / 60 VOLTS	
12 VOLTS SWITCHED	
12 VOLTS UNSWITCHED	
5 OR 3.3 VOLTS	
DIGITAL SIGNAL	
POWER CONTROL	
ANALOG SIGNAL	
COMMUNICATION	
A-D GROUND	
POWER GROUND	
AC VOLTAGE	

REF 264422 REV

2021 *Engine Harness*

900 ACE Turbo

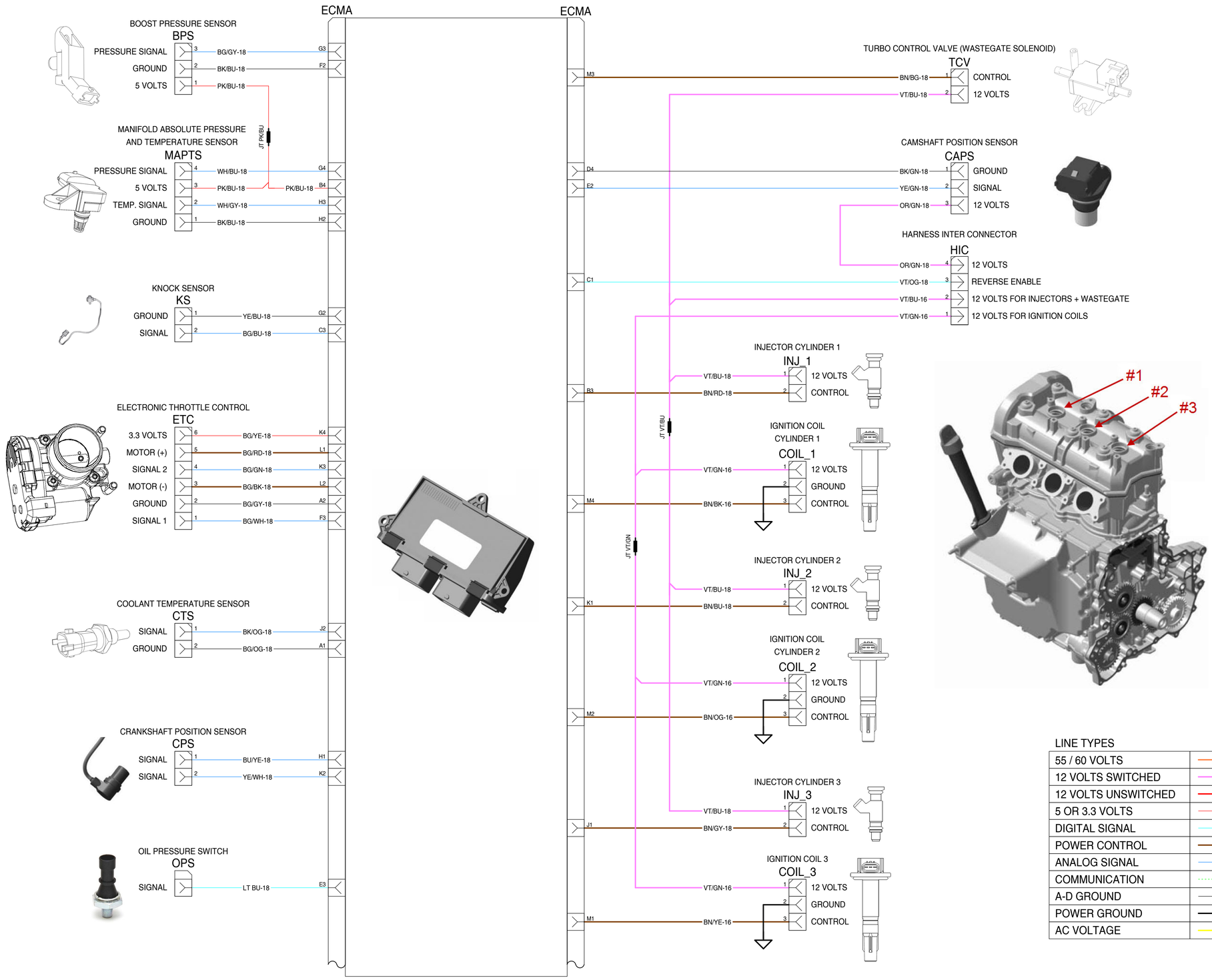

REF: 666 555 REV: